REALISTIC®

Service Manual

20-135/9135

PRO-34
Programmable Scanner
Catalog Number: 20-135/9135

©1988, Tandy Corporation.
All Rights Reserved.
Realistic and Radio shack are registered trademarks of Tandy Corporation.

CONTENTS

	Page
Contents	2
Specifications	3
Block Diagram	4
Principles of Operation	5
General Operation Outline	7
Alignment/Adjustment	9
Reception Check	16
Memory Check	17
Troubleshooting	18
Wiring Diagram	20
Jack PCB (Top View)	21
Jack PCB (Bottom View)	22
Linear PCB (Top View)	23
Linear PCB (Bottom View)	25
Logic PCB (Top View)	27
Logic PCB (Bottom View)	29
Electrical Parts List	31
Mechanical Parts List	44
Disassembly Diagram/Exploded View	45
Semiconductor Lead Identification and IC Circuit Diagram	46
Microprocessor (IC1) Port Format	54
Appendix	55
Schematic Diagram (Linear Section)	56
Schematic Diagram (Logic Section)	58

SPECIFICATIONS

Frequency Coverage	VHF LOW	*1	30−54 MHz 5 kHz steps
	AIRCRAFT		108−136 MHz 25 kHz steps
	VHF HIGH		136.005−174 MHz 5 kHz steps
	UHF LOW		380−512 MHz 12.5 kHz steps
	UHF HIGH	*2	806.0000−823.9375 MHz
		*2	851.1125−868.9375 MHz
		*2	896.1125−960.0000 MHz 12.5 kHz steps

		UNIT	NOMINAL	LIMIT
Sensitivity	VHF LOW FM	μV	1.0	2.0
	AIRCRAFT AM	μV	2.0	5.0
	VHF HIGH FM	μV	1.0	3.0
	UHF LOW FM	μV	1.0	4.0
	UHF HIGH FM	μV	2.0	4.0
Squelch Sensitivity	at threshold	μV	1	2
	at tight	dB	25	15
Selectivity	−6 dB	kHz	±10	±14
	−50 dB	kHz	±20	±25
Spurious Rejection (except primary image)	VHF LOW at 40 MHz	dB	50	40
	AIRCRAFT at 124 MHz	dB	50	40
	VHF HIGH at 154 MHz	dB	50	40
	UHF			Not specified

*1 68−88 MHz for 20−9134
*2 806−960 MHz for 20−9134

IF Rejection		dB	50	40
Modulation Acceptance	(EIA RS-204-A)	kHz	±8	±5
Signal to Noise Ratio	VHF LOW at 40 MHz	dB	45	30
	AIRCRAFT at 124 MHz	dB	35	25
	VHF HIGH at 154 MHz	dB	45	30
	UHF LOW at 450 MHz	dB	35	25
	UHF HIGH at 860 MHz	dB	35	25
Residual Noise	Vol. Min.	mV	3	5
Scanning Speed		channels/sec	8	6-10
Scan Delay Time		sec	2	1-3
Audio Output Power	T.H.D.10%	mW	200	150

Channels of Operation	Any 200 channels in any band combination
Channel, Frequency and Mode Display	Liquid crystal display
Receiving System	Direct Key entry Digital-Controlled Synthesizer, Superheterodyne 1st IF:10.7 MHz 2nd IF:455 kHz
Power Source	9V DC negative ground only 6 AA batteries or a suitable adapter
Jacks	Antenna, Earphone, External Power and Charge

Note: Nominal Specs represent the design specs: all units should be able to approximate these−some will exceed and some may drop slightly below these specs. Limit Specs represent the absolute worst condition that still might be considered acceptable: in no case should a unit perform to less than any limit spec.

BLOCK DIAGRAM

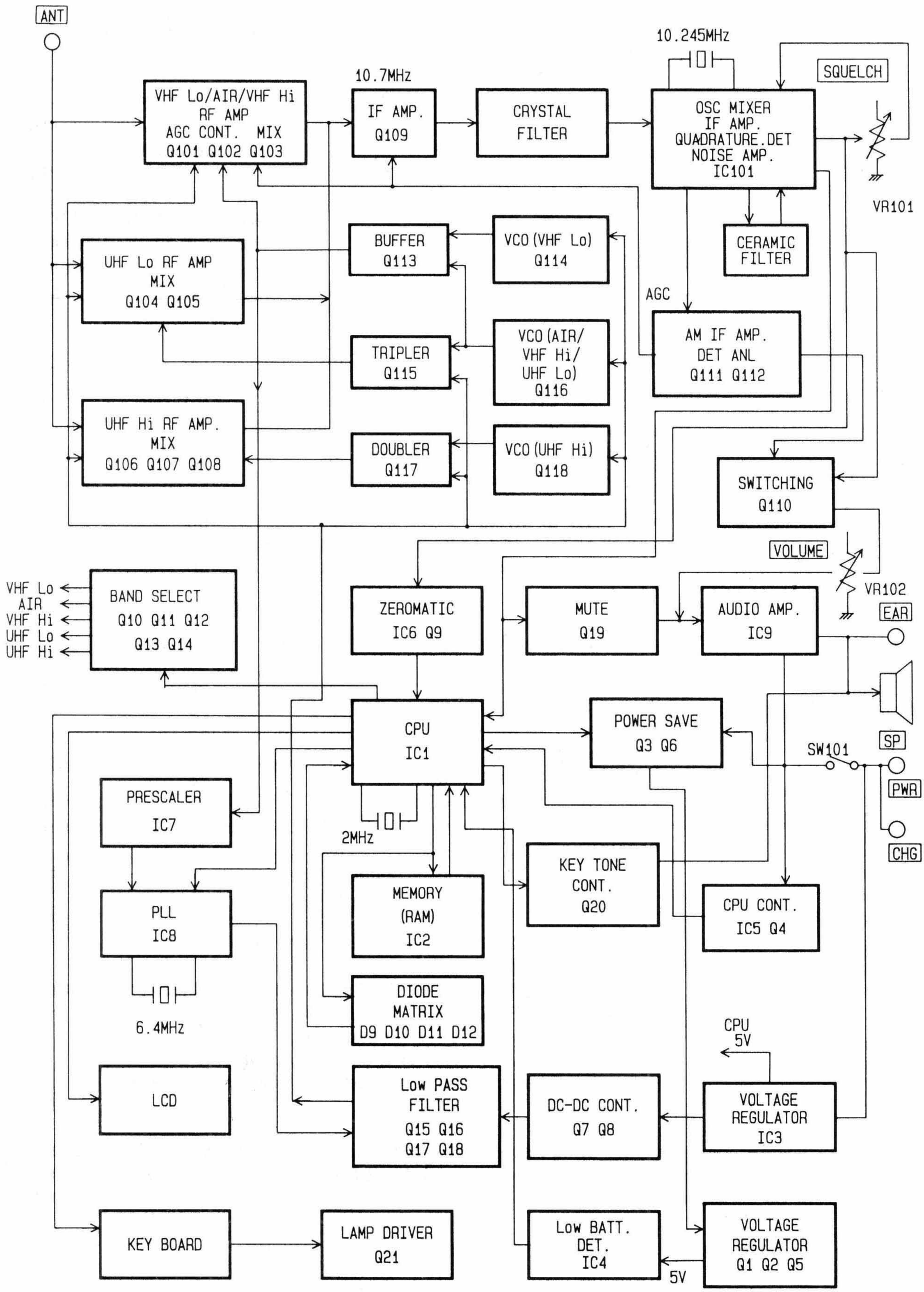

PRINCIPLES OF OPERATION

The PRO-34 is a PLL (Phase Locked Loop) synthesized VHF/UHF FM receiver, controlled by a CPU (central processing unit) via a keyboard.

The VHF Lo band (30~54 MHz) or VHF Hi band (136.005~174 MHz) is received in 5 kHz increments and the UHF Lo band (380~512 MHz) or UHF Hi band (806~960 MHz) is set up to be 12.5 kHz increments. Similarly, the aircraft band (108~136 MHz) is in a 25 kHz step.

All functions such as receiving frequency range, frequency determination, scanning and delay time etc. are controlled by the CPU. The CPU is able to do only the assigned functions, and no modification of the CPU is feasible.

The following paragraphs explain the operation of the circuit in terms of the functional blocks:

A varactor (variable capacitance diode) tuning ("Automatic Tuning System") is employed on all Bands.

Field-effect transistors (FET) are used in the RF/MIX circuits of low and high Bands, to achieve optimum mix-modulation and mutual-modulation characteristics. Q109 amplifies the 10.7 MHz IF. A 10.7 MHz monolithic crystal filter is incorporated to obtain a good IF selectivity.

IC101 contains the local oscillator, mixer, IF amplifier, quadrature FM detector and noise amplifier. A crystal oscillator produces 10.245 MHz which is mixed with 10.7 MHz, resulting in 455 kHz IF. A 455 kHz ceramic filter is provided to increase the IF selectivity. The 455 kHz IF signal is amplified in the IF amp stage, and the quadrature FM detector detects it to an audio signal.

The detected output of the FM is applied to IC9. IC9 amplifies the audio signals and drives the speaker.

IC1 is the CPU. The CPU does data processing, calculation etc. Any unstable supply voltage (V_{DD}) to the CPU can cause the CPU to get mal-functioned, such as wrong data processing, wrong data transfer etc. To overcome this, C2 and R13 in the logic circuit "initialize" the CPU. (Refer to the logic section schematic on page 60.)

The initialization is done as soon as batteries or external power is connected. Figure A shows the initializing waveform. Memory backup function is automatically started whenever the initialization has been done and then functions in approximately 1 hour after the batteries or external power is disconnected.

The RESET switch is located in the hole on the bottom of the battery compartment and is used to correct an LCD or keyboard mal-function.

The unit has battery-saving control circuit in manual mode. When the unit is in operation, the pin 74 of IC1 (CPU) is "H" and Q3 is ON. If no signal input or no key input existed more than 5 seconds in manual mode with the SQUELCH on, the pin 74 becomes "L" (Fig. B) and Q3 turns off then the power supply for most of circuit is shut down (except CPU and Audio circuit). In this battery-saving mode, 40% of the power can be saved during normal operation.

The initialization of the CPU, mentioned above can also be done by pushing RESET switch. Figure A shows the rise time duration when the initialization is done.

CX1 (2 MHz) is a ceramic oscillator clock which is used for CPU control. Figure C shows 1/8 divided waveform of Figure D.

IC 1 Pin①

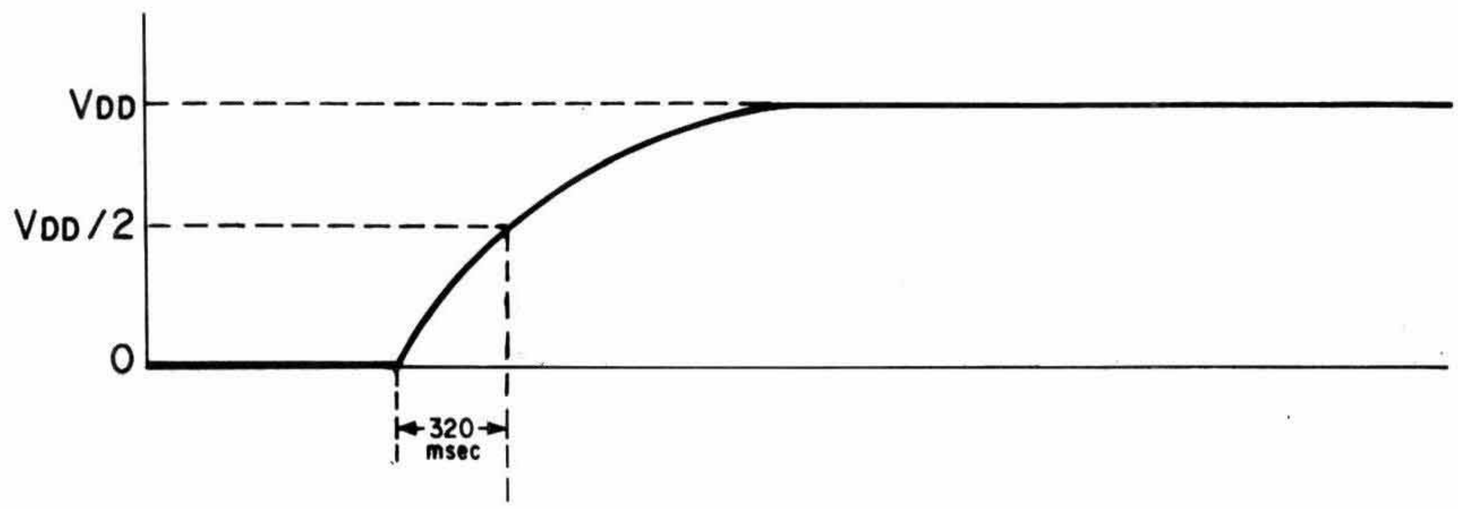

Figure A

IC 1 Pin⑭

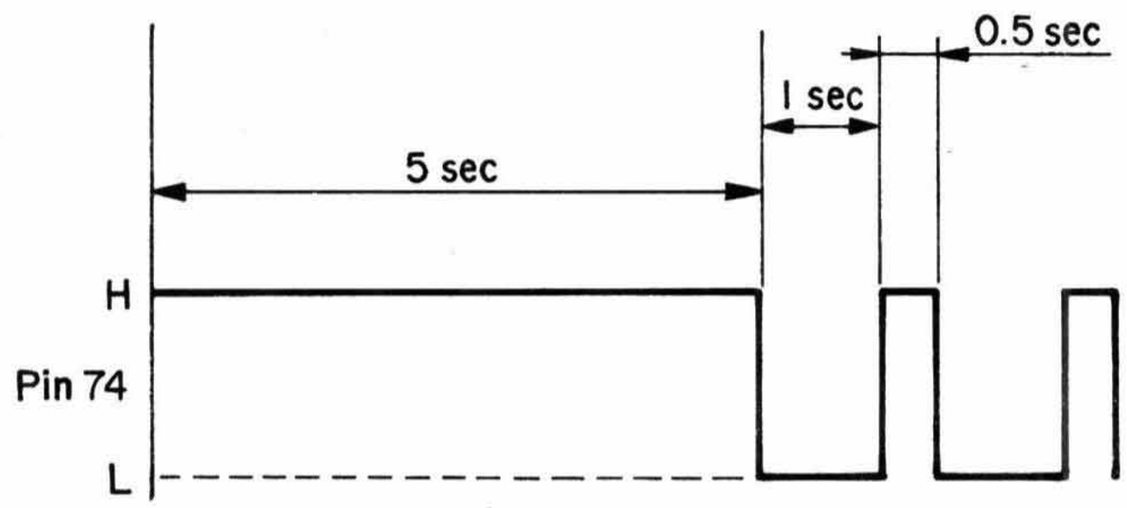

Figure B

IC 1 Pin㉞

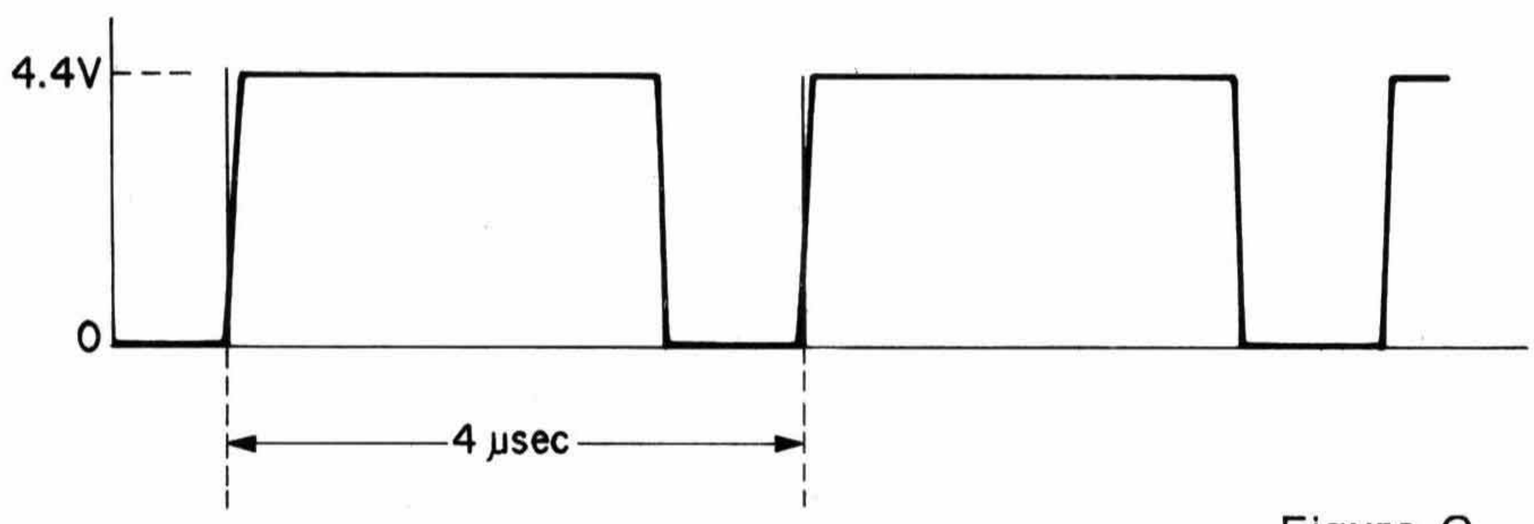

Figure C

IC 1 Pin⑤

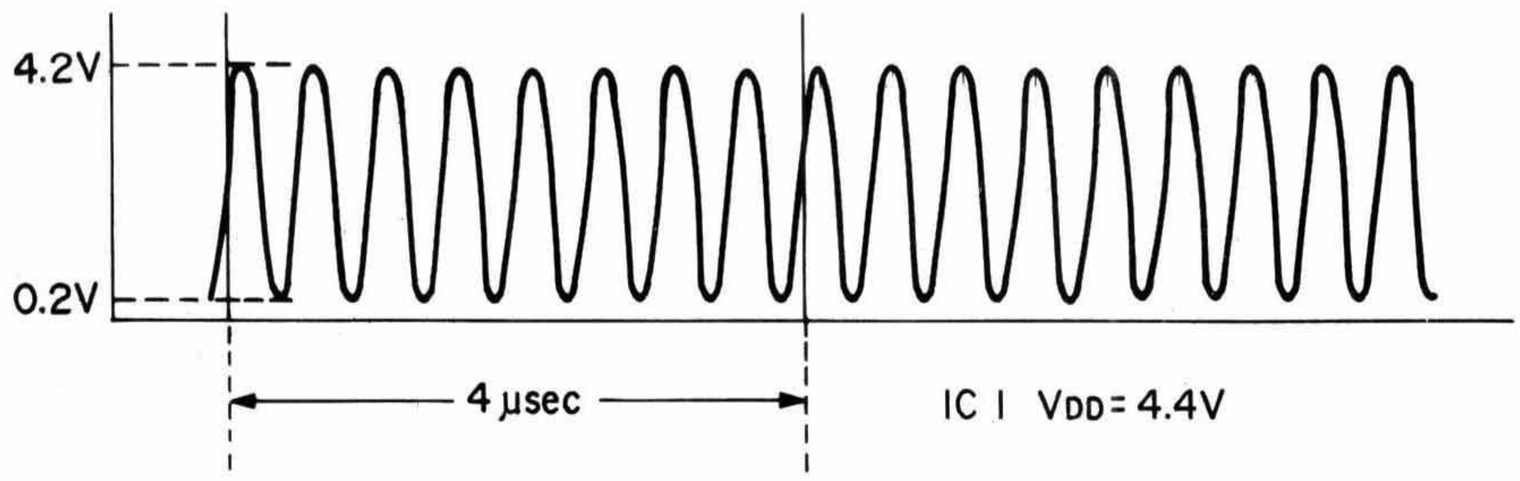

Figure D

GENERAL OPERATION OUTLINE

Turn power SW on.
Automatically sets to SCAN mode and starts scanning when the SQ is on.

When battery voltage drops, "BATT" is indicacated and peep–tone sounds from speaker.

Press RESET SW, located at the battery compartment.

Scan Bank 1 through 10 are displayed.
If there is any blank scan bank, press the number key to light all scan banks, and to blink one of them in one after another.

Press [1] through [9] key.
Scan Bank 1 through 9 will disappear.

Press [0] key. No response.

Press [1] through [9] key and [0] key.
Scan Bank 1 through 9 are displayed except 10.

Press [SPEED] so that Scan speed is changed in two speeds, fast or slow.

Press [SPEED] so that Scan speed is changed to the other.

To obtain priority operation in Scan mode, press [PRI].

To release priority operation, press [PRI] again.

Press [MANUAL]. When [MANUAL] is pressed again, the channel advances. To select one of 1 through 200 channels, push the number key and then push [MANUAL].

To start DIRECT Search, press [▲] or [▼] key.
No reaction when the frequency is 000.0000.

Press [MANUAL].

To hold the channel, press [DELAY].
(when this channel is not set to [DELAY].)

To release the delay function, press [DELAY] again.

To skip certain frequency, press [L/OUT].
(when this channel is not set to [L/OUT].)

To release the lock out function, press [L/OUT] again.

To obtain priority operation in manual mode, press [PRI].

To release the priority function, press [PRI] again.

Press [PGM] to set to program mode.

*1 *2

*1

Enter the desired frequency in each channel as follows:

Enter the desired frequency with numeral keys.

Press [ENTER] to memorize the frequency.
If wrong frequency (out of the band) is entered, "ERROR" will be displayed.
Press [CLEAR], then enter the correct frequency.

Press [PGM] to advance to next channel.
Enter the frequency and press [ENTER].
Repeat it to memorize frequencies one by one.

Press [PRI] so that priority channel appears.

To revert to the previous channel, press [PRI] again.

Press numeral keys (1 through 200) and then press [PRI].
Priority channel will be changed to newly entered channel.

To call monitor channels, press [MON].

Press [MON] so that next monitor channel appears.

To call the monitor channels directly, press numeral keys.

To revert to the previous channel, press [PGM].

KEY LOCK switch ON. All keys unoperate except REMOTE KEY (SCAN, MAN).

*2

Enter search frequency as follows.

Press [LIMIT] and enter the lower frequency of the range to search with numeral keys.

Press [ENTER].

Press [LIMIT] and enter the upper frequency of the range to search.

Press [ENTER].

Press [▲] to search from lower frequency.
Press [▼] to search from upper frequency (squelch must be on).

Press [MON] to store the desired frequency (10 monitor channels) in the search mode.

To start search, press [▲] or [▼].

ALIGNMENT/ADJUSTMENT

Alignment and Test Point Locations

Logic PCB

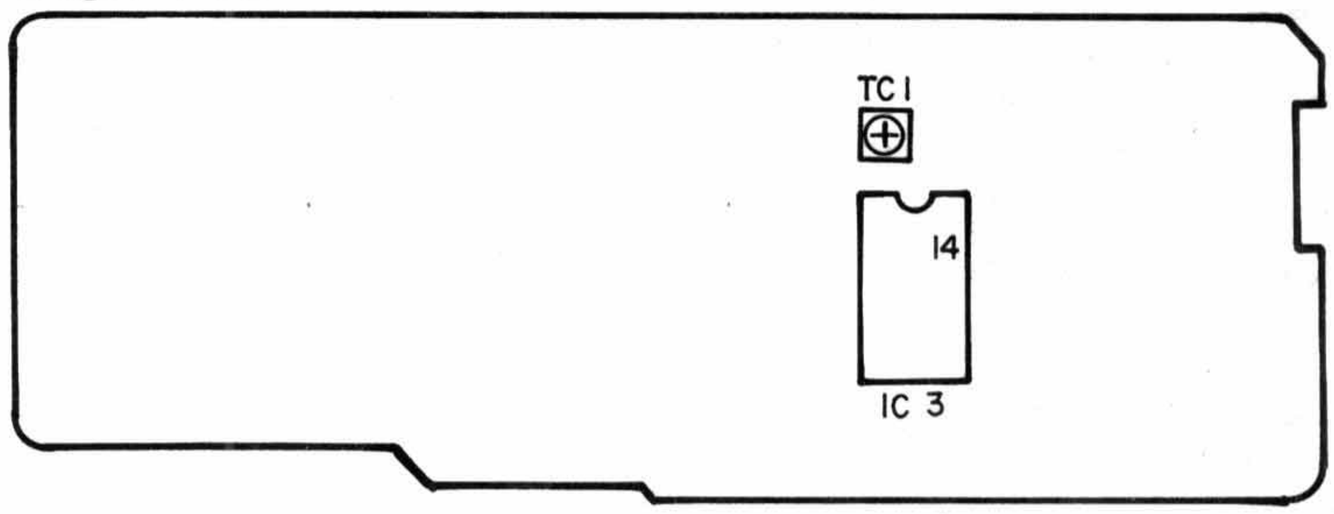

Linear PCB

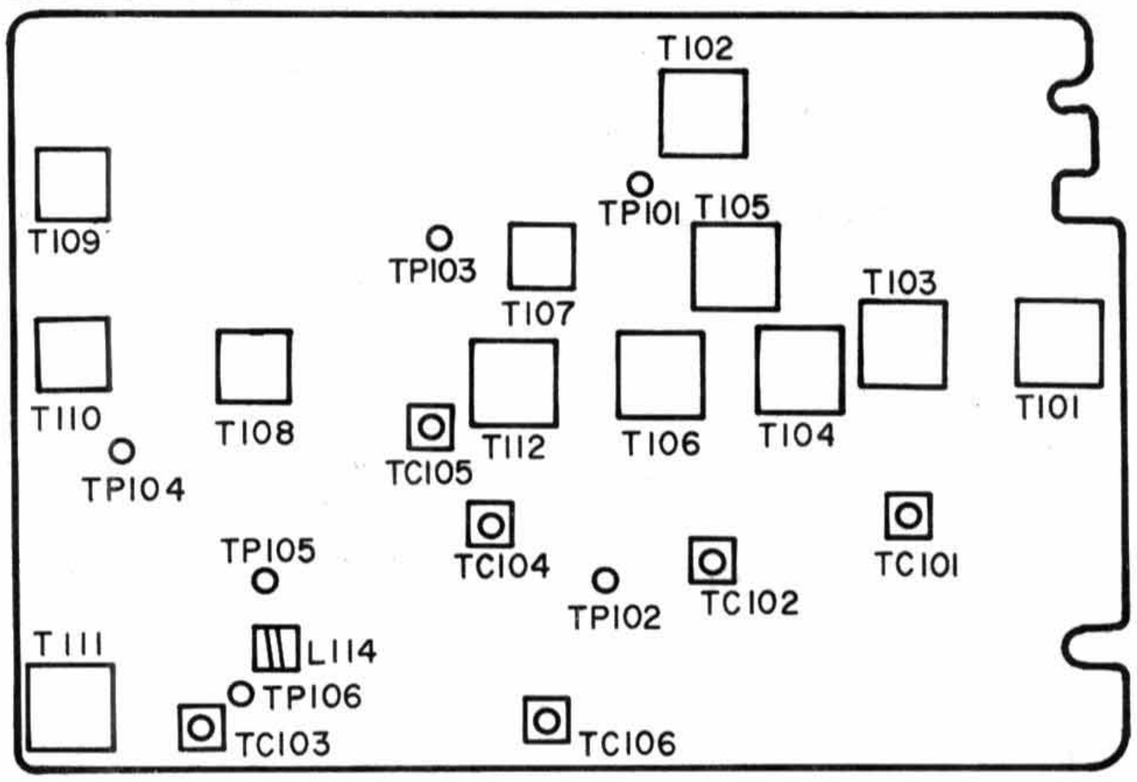

Alignment Preparation

Test equipment required

1. Oscilloscope (0~500 kHz, 0~50 MHz)
2. AC SSVM
3. DC SSVM
4. Frequency Counter (200 MHz)
5. 8-ohm dummy load
6. Slow Sweep Generator with variable marker (10.7 MHz)
7. VHF Sweep Generator with variable marker (30~54 MHz, 136.005~174 MHz)
8. UHF Sweep Generator with variable marker (380~512 MHz)
9. FM Signal Generator (30~54 MHz, 136.005~174 MHz, 380~512 MHz, 806~960 MHz)

Notes:

- Use non-metallic tuning tools.
- The test equipment and receiver should be warmed up at least 10 minutes before proceeding to alignment.
- The signal level from the generator should be kept as low as possible to obtain the usable output.
- 6 AA batteries are required to hold the memory when the external power is disconnected. Always be sure the batteries are fresh. If the low-battery indicator lights, replace the batteries, or the pre-programmed channel memories will be lost (and will have to be re-programmed).

The memory backup circuit can hold the programmed channel memories for about one hour even when neither the batteries nor the external power is provided.

Program CH1 to CH15 as follows.

Channel	Frequency(MHz)	Channel	Frequency(MHz)
1	30.0000	9	174.0000
2	41.0050	10	380.0000
3	54.0000	11	451.0000
4	108.0000	12	512.0000
5	121.0000	13	806.0000
6	136.0000	14	860.0000
7	136.0050	15	960.0000
8	155.0000		

Table 1

ALIGNMENT PROCEDURES

Reference Frequency OSC Alignment

Step	Control Setting	Test Instrument Connection	Adjust	Remarks
1	OFF／VOLUME Control: ON SQUELCH Control: Fully counterclockwise (CCW) Select Channel 4.	Connect Frequency counter to TP105 through a ceramic capacitor (5−10 pF) and GND. Figure 1	TC1	Adjust TC1 so that the frequency is 118.700000 MHz ±10 Hz.

IF Section Alignment

Step	Control Setting	Test Instrument Connection	Adjust	Remarks
2	OFF／VOLUME control: ON SQUELCH Control: CCW	Connect test instruments as shown in Fig. 2	T107 T108	Adjust T107 to symmetrize the upper and lower heights of the S curve to be equal and adjust T108 to symmetrize the left and the right of the S curve.

Note:
During alignment, maintain the sweep generator output at the lowest level possible to prevent overloading.

Figure 1

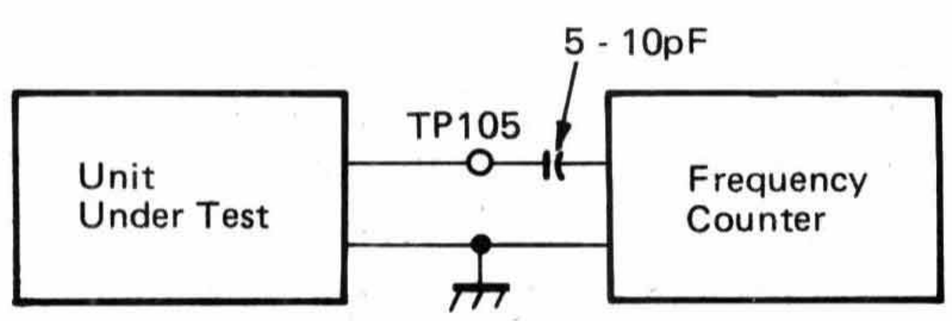

Figure 2

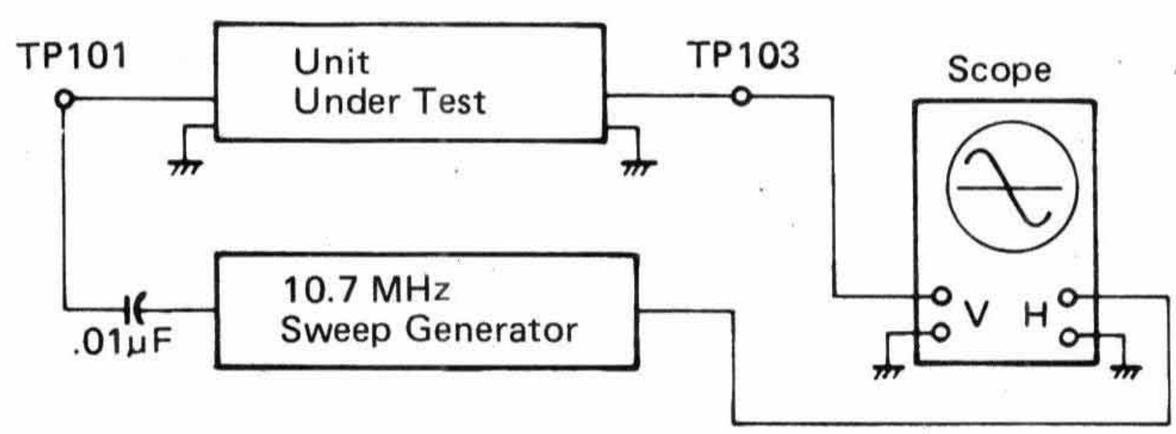

VCO Alignment

VHF LO Band

Step	Control Setting	Test Instrument Connection	Adjust	Remarks
3	OFF／VOLUME Control: ON SQUELCH Control: CCW Select channel 1 through 3.	Connect DC SSVM to TP106 and GND.	TC103 T111	1) Select channel 3 and adjust TC103 for 13V on the DC SSVM. 2) Select channel 1 and adjust T111 for 1.0 V on the DC SSVM. 3) Repeat steps 1) and 2) until no further improvement is observed. See Table 2.

CH	Frequency	Voltage
CH1	30 MHz	Voltage at TP106 0.9−1.2 V
CH2	41.005 MHz	Voltage at TP106 5.5−6.5 V
CH3	54 MHz	Voltage at TP106 12.5−13.5 V

Table 2

VHF AIR, HI and UHF LO Bands

Step	Control Setting	Test Instrument Connection	Adjust	Remarks
4	OFF／VOLUME Control: ON SQUELCH Control: CCW Select channel 4 through 12.	Connect DC SSVM to TP106 and GND.	TC105 T112	1) Select channel 12 and adjust TC105 for 13 V on the DC SSVM. 2) Select channel 4 and adjust T112 for 1.0 V on the DC SSVM. 3) Repeat steps 1) and 2) until no improvement is observed. See Table 3.

CH	Frequency	Voltage
CH4	108.0000 MHz	Voltage at TP106 0.9−1.1 V
CH5	121.0000 MHz	Voltage at TP106 2.4−3.1 V
CH6	136.0000 MHz	Voltage at TP106 5.7−6.7 V
CH7	136.0050 MHz	Voltage at TP106 1.6−1.9 V
CH8	155.0000 MHz	Voltage at TP106 4.1−5.1 V
CH9	174.0000 MHz	Voltage at TP106 11.0−11.8 V
CH10	380.0000 MHz	Voltage at TP106 1.2−1.6 V
CH11	451.0000 MHz	Voltage at TP106 5.7−6.7 V
CH12	512.0000 MHz	Voltage at TP106 12.9−13.1 V

Table 3

UHF HI Band

Step	Control Setting	Test Instrument Connection	Adjust	Remarks
5	OFF／VOLUME Control: ON SQUELCH Control: CCW Select channel 15.	Connect DC SSVM to TP106 and GND.	L114	Adjust L114 for 12 V on the DC SSVM. See Table 4.

CH	Frequency	Voltage
CH13	806.0000 MHz	Voltage at TP106 3.4−4.5 V
CH14	860.0000 MHz	Voltage at TP106 6.5−7.7 V
CH15	960.0000 MHz	Voltage at TP106 11.8−12.2 V

Table 4

RF Amp Alignment

VHF LO Band

Step	Control Setting	Test Instrument Connection	Adjust	Remarks
6	OFF／VOLUME Control: ON SQUELCH Control: CCW Select channel 1 through 3. See Table 1.	Connect instruments shown as Fig.3. SWEEP GENERATOR 30−54 MHz.	T101 T102	1) Select channel 2 and adjust T101 and T102 for maximum RF waveform. 2) Check channel 1 through 3 for maximum output. A slight deviation as Fig.4 is acceptable.

VHF AIR Band

Step	Control Setting	Test Instrument Connection	Adjust	Remarks
7	OFF／VOLUME Control: ON SQUELCH Control: CCW Select channel 5 through 6. See Table 1.	Same as Step 6 SWEEP GENERATOR 108−174 MHz.	T103 T105	1) Select channel 5 and adjust T103 and T105 for maximum RF output. 2) Check channel 4 through 6 for maximum RF output. A slight deviation as Fig.5 is acceptable.

VHF HI Band

Step	Control Setting	Test Instrument Connection	Adjust	Remarks
8	OFF／VOLUME Control: ON SQUELCH Control: CCW Select channel 7 through 9. See Table 1.	Same as Step 6. SWEEP GENERATOR 136.0005−174 MHz.	T104 T106	1) Select channel 7 and adjust T104 and T106 for maximum RF waveform. 2) Check channel 7 through 9 for maximum RF output. A slight deviation as Fig.6 is acceptable.

UHF LO Band

Step	Control Setting	Test Instrument Connection	Adjust	Remarks
9	OFF／VOLUME Control: ON SQUELCH Control: CCW Select channel 10 through 12. See Table 1.	Same as Step 6 SWEEP GENERATOR 380−512 MHz.	TC101 TC102 TC104	1) Select channel 10 and adjust TC101, TC102 and TC104 for maximum RF output. 2) Check channel 10 through 12 for maximum RF output. A slight deviation as Fig.7 is acceptable.

UHF Hi band: No adjustment required.

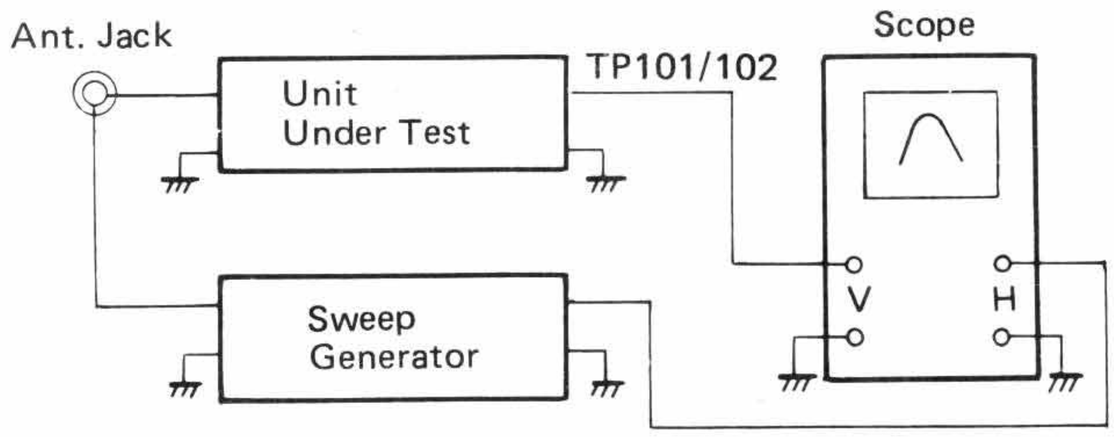

Figure 3

Notes:

- Use TP101 for VHF Lo, Air and VHF Hi band adjustment.
- Use TP102 for UHF Lo band adjustment.

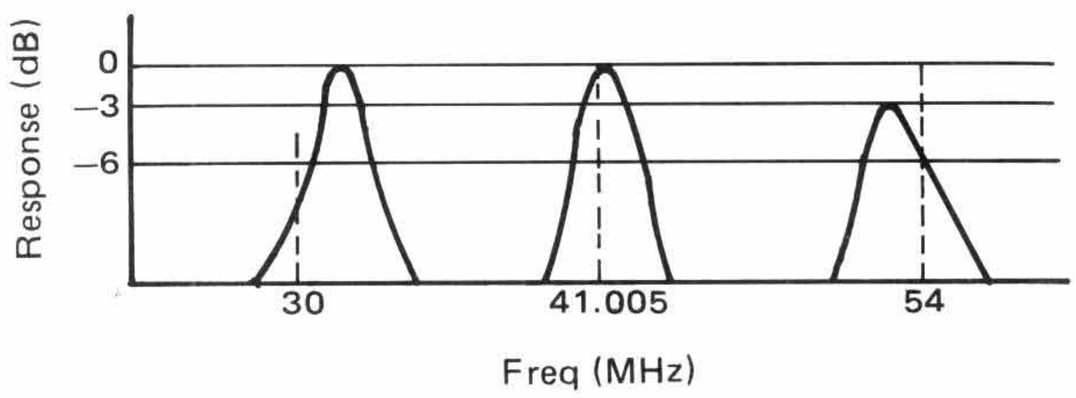

Figure 4

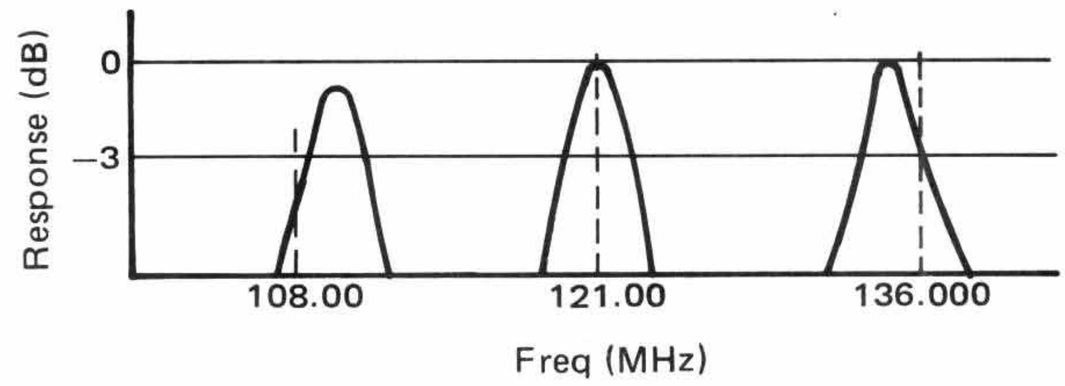

Figure 5

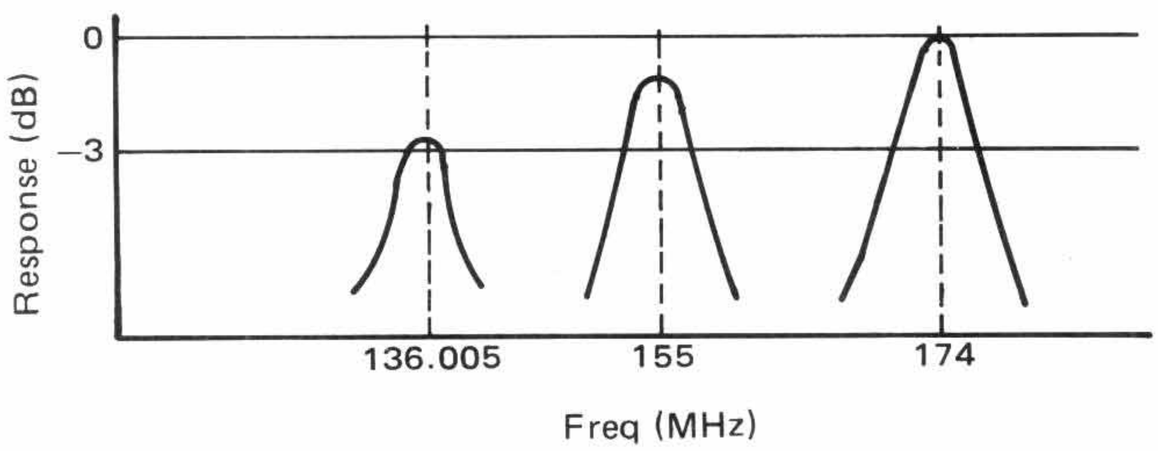

Figure 6

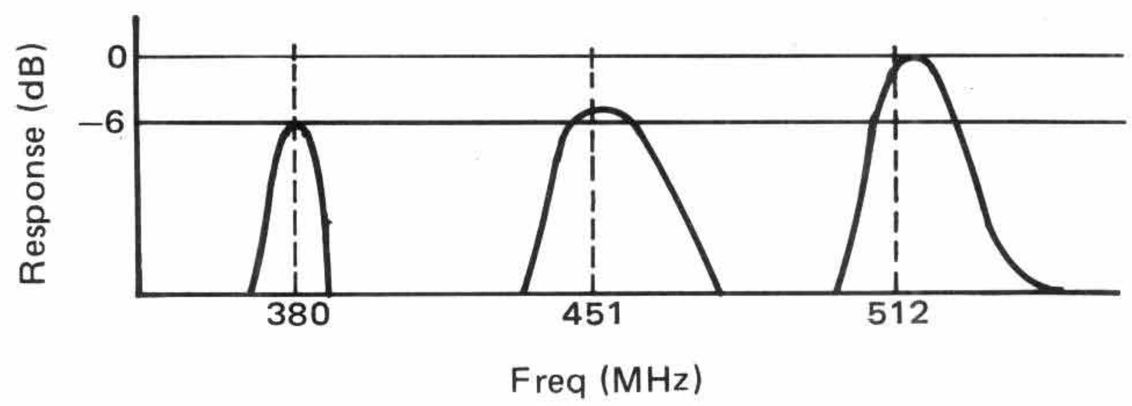

Figure 7

Overall Alignment and Sensitivity Measurement

Step	Control Setting	Test Instrument Connection	Adjust	Remarks
10	OFF／VOLUME Control: ON SQUELCH Control: CCW Select channel 10.	Connect FM signal generator to the ANT jack and AC SSVM to EAR jack across 8 ohm dummy load. Fig.8.	TC104	Readjust TC104 for maximum sensitivity.
11	OFF／VOLUME Control: ON SQUELCH Control: CCW Select channel 5.	Connect AM signal generator to the ANT jack and AC SSVM to EAR jack across 8 ohm dummy load. Fig.9.	T107 T109 T110	1) Adjust T109 for maximum sensitivity. 2) Adjust T110 for minimum THD. 3) Readjust T107 for maximum sensitivity.
12	OFF／VOLUME Control: ON SQUELCH CONTROL:CCW Select channel 13.	Same as step 10.	T106	Adjust TC106 for maximum sensitivity.

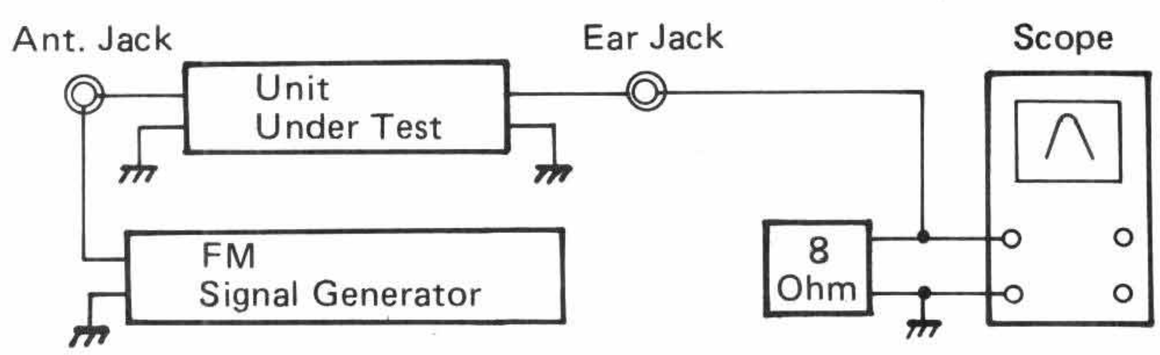

Figure 8

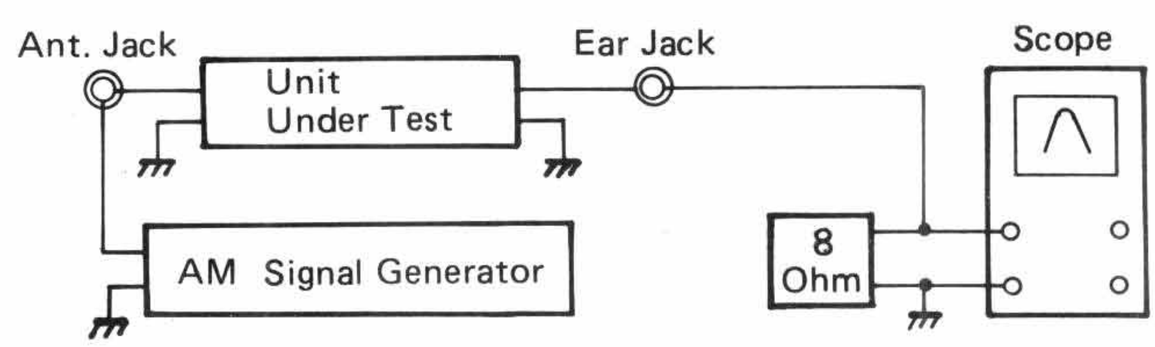

Figure 9

Step	Control Setting	Test Instrument Connection	Remarks
13	OFF／VOLUME Control: ON SQUELCH Control: CCW Channel as Table 1.	Connect FM signal generator to the ANT jack and AC SSVM to EAR jack across 8 ohm dummy load. Set the signal generator to each frequency as Table 1. Set the VOLUME control for 0 dB (0.775 V) reading on the SSVM.	Turn off the modulation and measure the (S+N)／N ratio.

Note:
TP104 is used to observe the AM band detection output.

Zeromatic Function Test Procedure

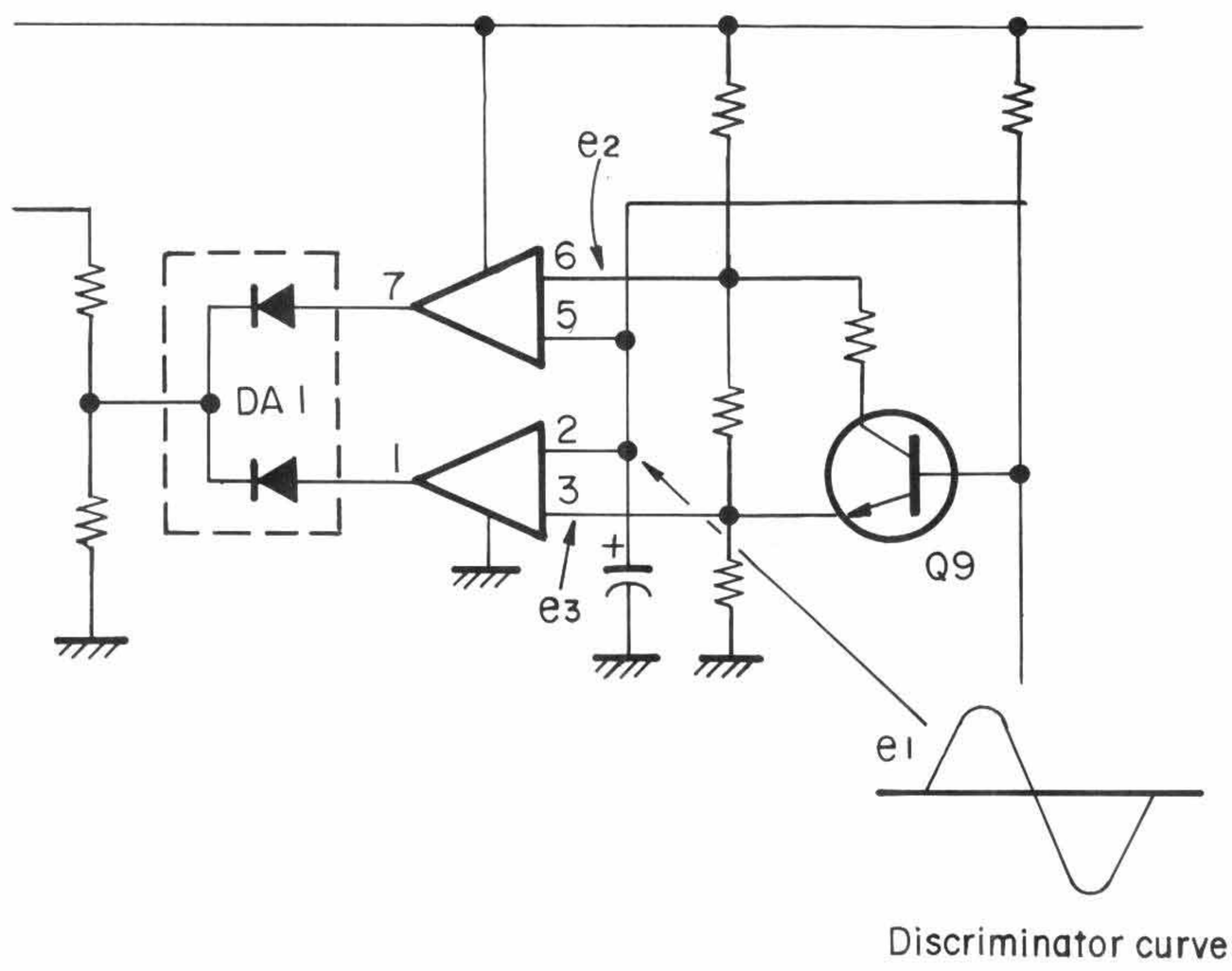

(Zeromatic functions when OUTPUT is in "L" level.)

	$0<e_1<e_3$	$e_3<e_1<e_2$	$e_2<e_1<V_{CC}$
OUTPUT (IC4 Pin No.8)	H	L	H

To adjust the e_1 voltage, receive a signal in the manual mode, and set T103 to obtain 2.7 V (1/2 V_{CC}) at TP-103. It is convenient to use the National Weather Service Signal for the adjustment.
In the event of Zeromatic not functioning correctly, refer to "Reference Frequency OSC Alignment" (page 10), and check 118.700000 MHz ±10 Hz, and adjust T103 again to 2.7 V DC while a signal is being received.

Key Access Pulse Output (IC1)

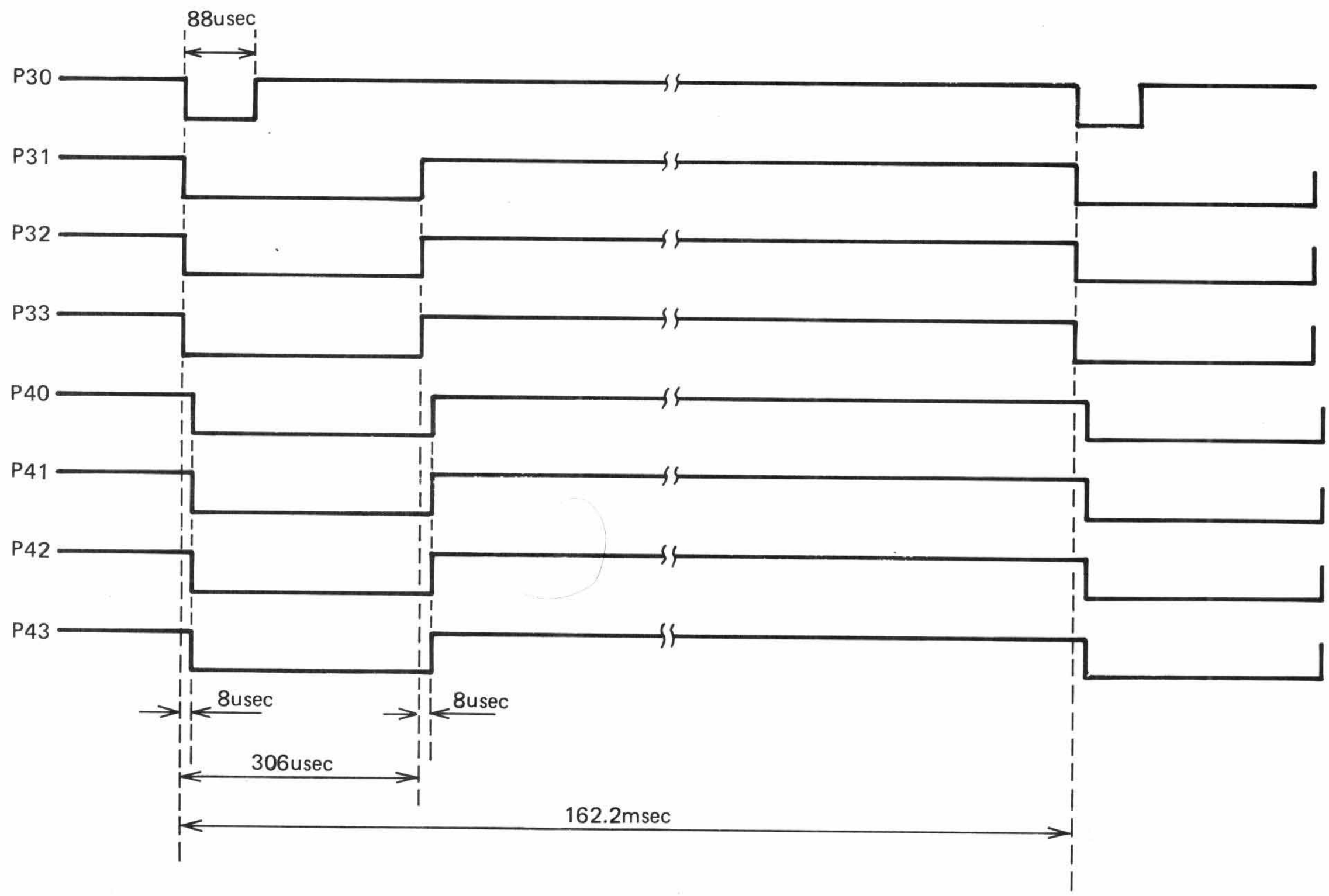

Note:
Set KEY-LOCK SW to OFF, and do not push any key in the Program Mode.

PLL Data Waveform (IC1)

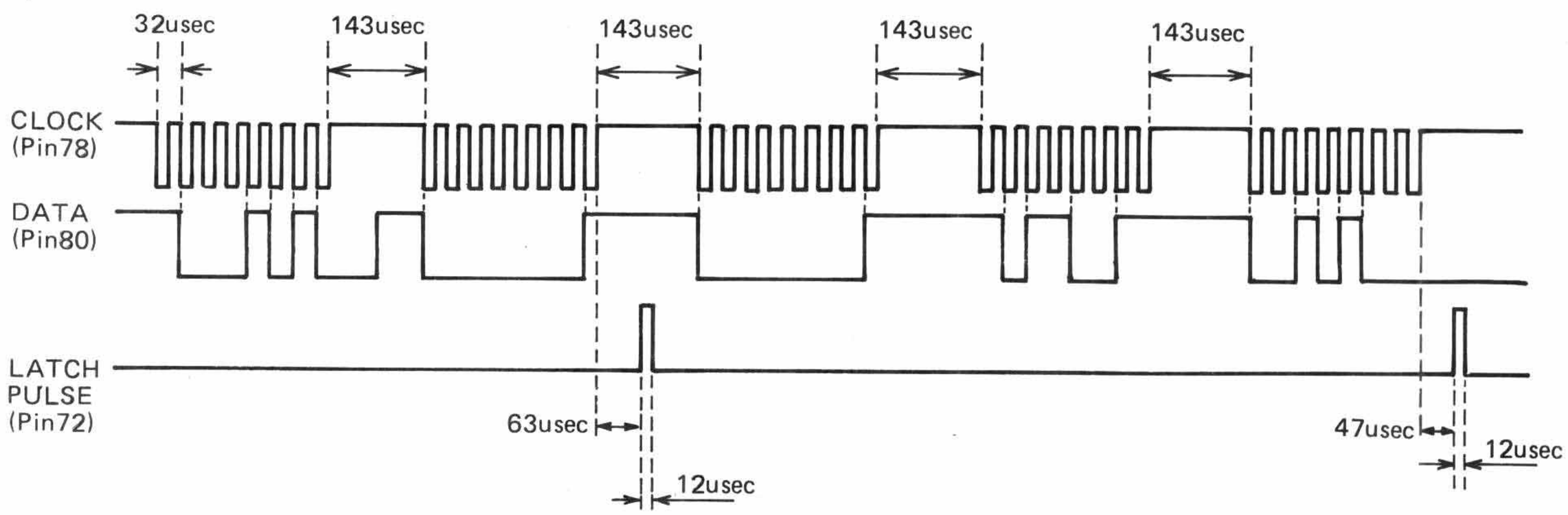

Note:
Enter 150.0000 MHz to channel 1 and lock out other channels.
Observe the waveform while scanning.

Reception Check

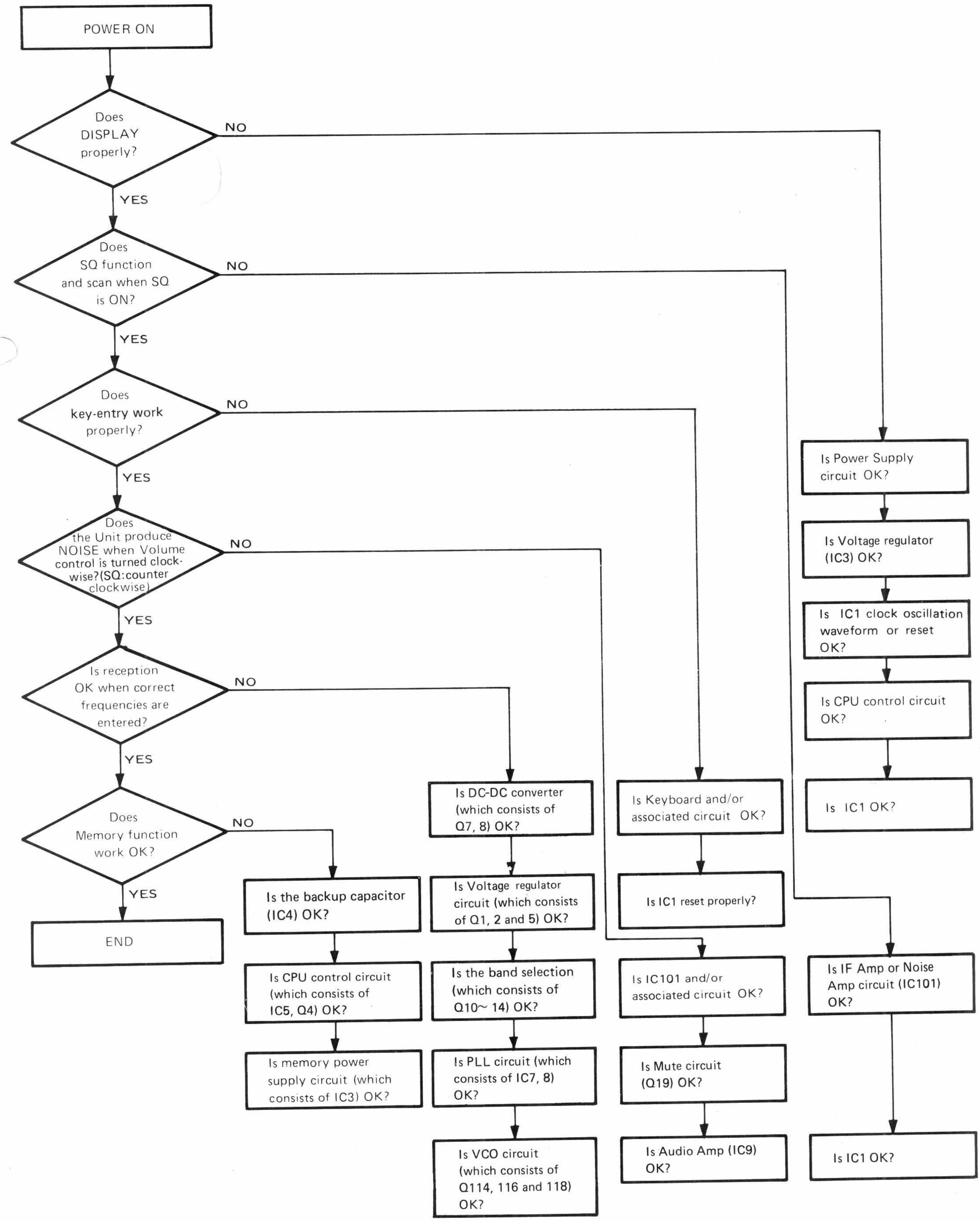

Memory Check

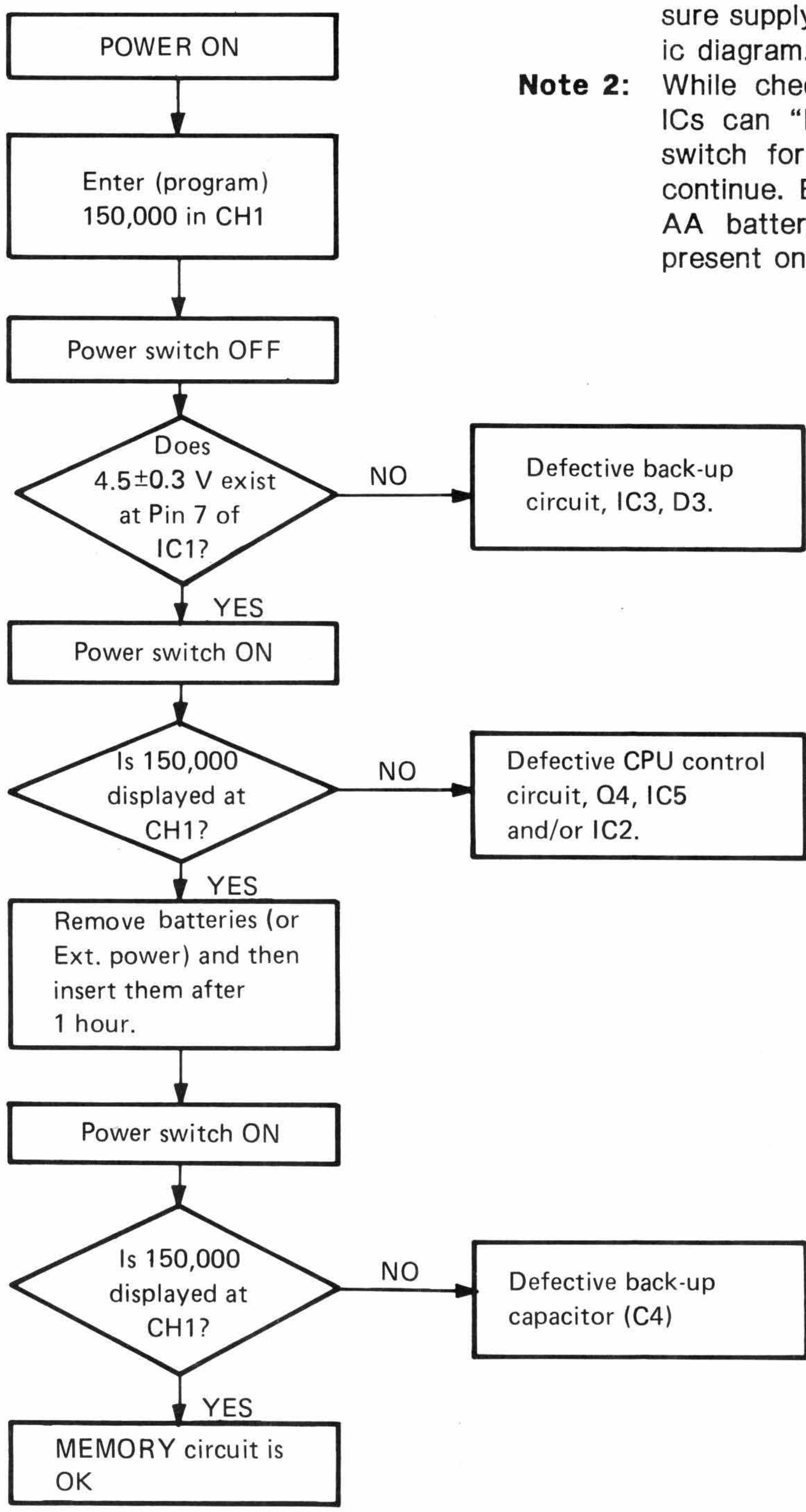

Note 1: Prior to checking the CPU System, measure supply voltage to ICs. (See schematic diagram.)

Note 2: While checking the following items, the ICs can "latch up." If so, push RESET switch for about one second and then continue. Be sure that either the built-in AA batteries or the external power is present on this check.

TROUBLESHOOTING

Symptom	Cause/Remedy
1) Display dose not light and no sound when POWER is on. Volume control: MAX. Squelch control: counterclockwise (CCW)	1) Defective batteries: Change batteries. 2) Wrong polarity of batteries: Correct the polarity of batteries. 3) Defective external power jack or charge jack:Replace. 4) Defective ON—OFF switch on volume control: Replace.
2) Display lights but no sound. Volume control: MAX. Squelch control: CCW	1) Defective speaker or EXT. SPKR jack: Replace the defective parts. 2) Defective audio amplifier IC9 and/or associated circuit components:Replace the defective components. 3) Defective IF amplifier IC101 and/or associated circuit components: Replace the defective components. 4) Defective functional squelch control and/or associated circuit components: Replace the defective components. 5) Defective Q19, IC1 and/or associated circuit: Replace the defective parts.
3) Sound comes out but display dose not light. Volume control: MAX. Squelch control: CCW.	1) Defective LCD or rubber connector: Replace the defective parts. 2) Defective IC1 and/or associated circuit: Replace the defective parts.
4) Does not scan and squelch does not operate.	1) Defective IC101 and/or associated circuit components: Replace the defective components. 2) Defective IC1 and/or associated circuit components: Replace the defective components.
5) Does not scan but squelch operates.	1) Defective IC1 and/or associated circuit components: Replace the defective components.
6) Displays incorrectly and/or unable to enter correctly when RESET switch is pushed.	1) Defective Keyboard and/or associated circuit: Replace the defective parts. 2) Defective CPU (IC1) and/or associated circuit: Replace the defective parts.
7) Displays correctly at the time of programming. But after scanning, it becomes faulty.	1) Defective CPU (IC1) and/or associated circuit: Replace the defective parts.
8) MANUAL select operates but SCAN does not operate.	1) Squelch control is not adjusted right: Turn squelch control clockwise.
9) All bands do not operate but display is OK.	1) Faulty connection between linear and logic PCBs: Replace the defective parts. 2) Defective Q15~18 in low-pass filter: Replace the defective parts. 3) Defective IC7, 8 and/or associated circuit: Replace the defective parts. 4) Defective Q1, 2, 5 voltage regulator and/or Q7, 8, D6, 7, 30, 31 DC—DC converter circuit and/or Q3, 6 power saving circuit: Replace the defective parts.

Symptom	Cause/Remedy
10) VHF Lo (Mid) band does not operate but Air, VHF Hi, UHF Lo and UHF Hi band operate.	1) Defective D101~104, T101, 102 Tuning circuit and/or Q114 VCO circuit: Replace the defective parts. 2) Defective Q10 and/or associated circuit: Replace the defective parts.
11) Aircraft band does not operate but VHF Lo, VHF Hi, UHF Lo and UHF Hi band operate.	1) Defective D111 and/or associated circuit: Replace the defective parts. 2) Defective AM IF Amp including Q111, 112: Replace the defective parts. 3) Defective Q11 in band switch circuit: Replace the defective parts.
12) VHF Hi band does not operate but VHF Lo, Air, UHF Lo and UHF Hi band operate.	1) Defective D105, 109, T104, 106 and/or associated circuit: Replace the defective parts. 2) Defective Q12 in band switch circuit: Replace the defective parts.
13) UHF Lo band does not operate but VHF Lo, Air, VHF Hi and UHF Hi band operate.	1) Defective Q104, 105, Q115 and/or associated circuit: Replace the defective parts. 2) Defective Q13 in band switch circuit: Replace the defective parts.
14) UHF Hi band does not operate but VHF Lo, Air, VHF Hi and UHF Lo band operate.	1) Defective Q106−108, 117 and/or associated circuit: Replace the defective parts. 2) Defective Q118 VCO circuit: Replace the defective parts. 3) Defective Q14 and/or associated circuit: Replace the defective parts.
15) Does not make beep tone.	1) Defective Q20 and/or associated circuit: Replace the defective parts. 2) Defective IC1 and/or associated circuit: Replace the defective parts.
16) LOW BATT does not indicate when battery voltage went down.	1) Defective IC4 and/or associated circuit: Replace the defective parts.
17) "Zeromatic" does not operate or holds on a drifted frequency at search operation.	1) Defective IC6, Q9 and DA1 in Zeromatic circuit: Replace the defective parts. 2) Discriminator coil is out of adjustment: TP103 shall have 1/2 Vcc(approx. 2.7 V) in normal receiving mode. 3) Refer to "Reference Frequency OSC Alignment" on page 10.

Important Note:
Pulse, generated while checking circuits and/or certain combinations of key operation may cause improper operation. To clear the malfunction, re-initialization of CPU is necessary: Push RESET switch while pressing [CLEAR], and then release the RESET switch. All channels (200 ch) will be cleared and frequency indicator displays 000.0000. (Be sure the power is on when doing the above.)

WIRING DIAGRAM

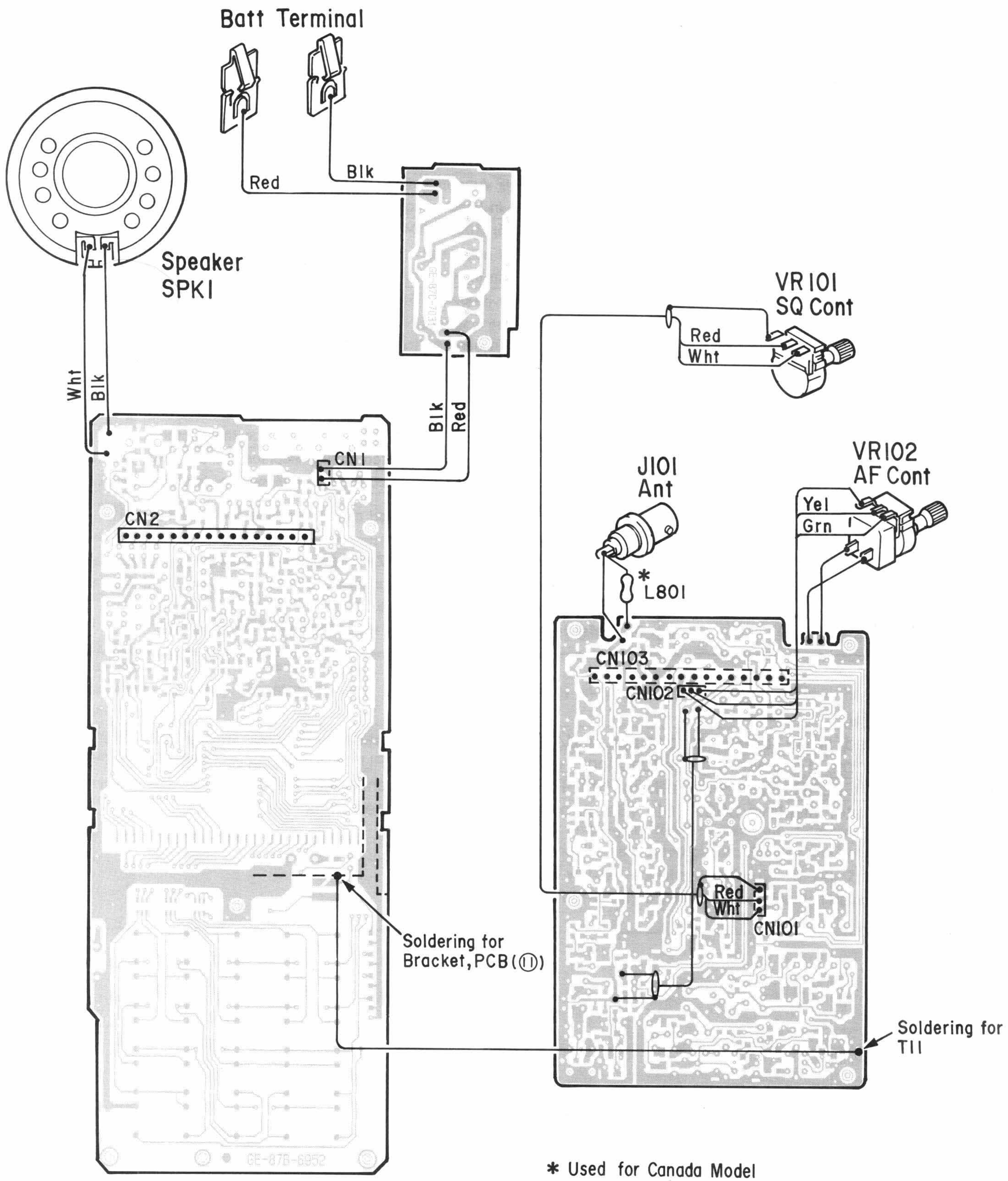

POWER JACK PCB (Top View)

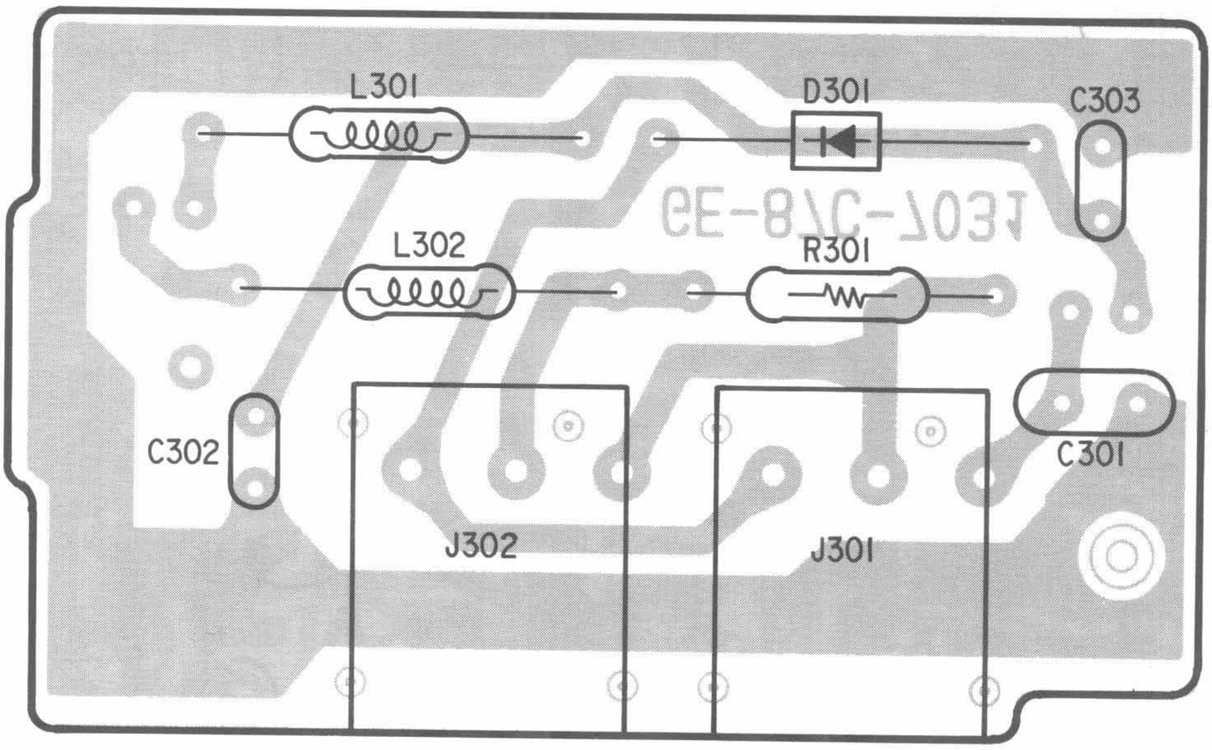

POWER JACK PCB (Bottom View)

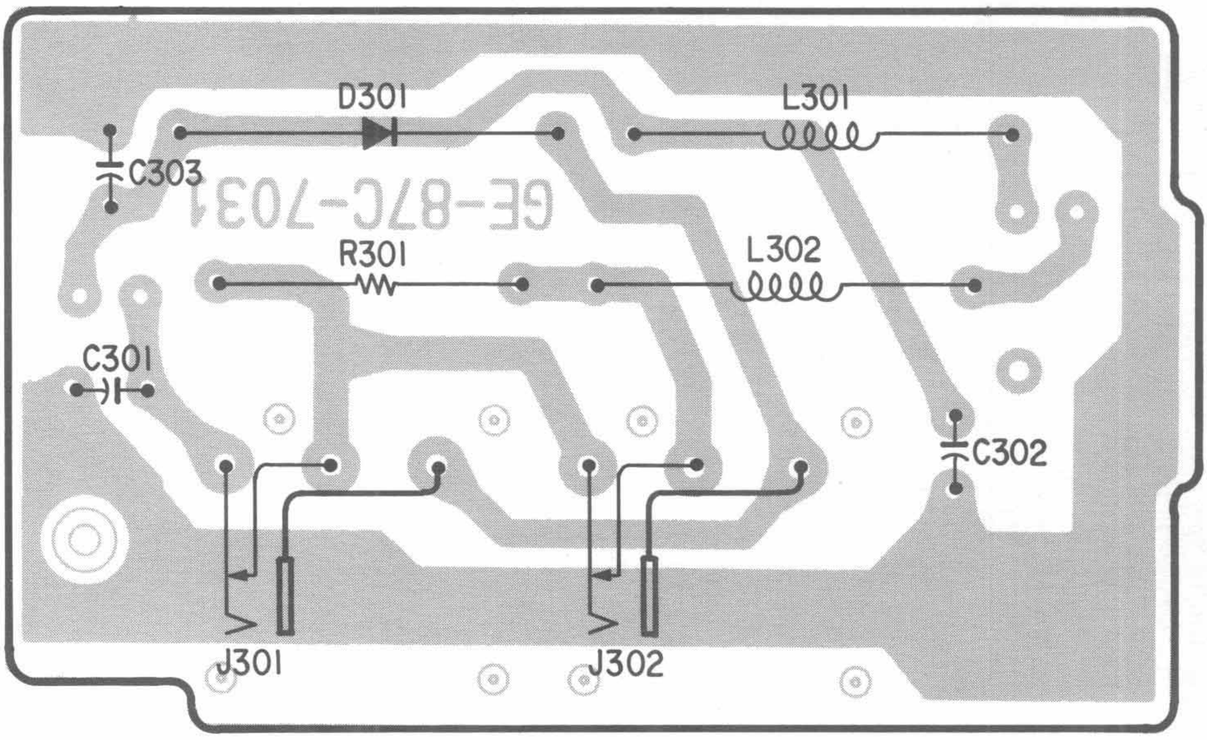

LINEAR PCB (Top View)

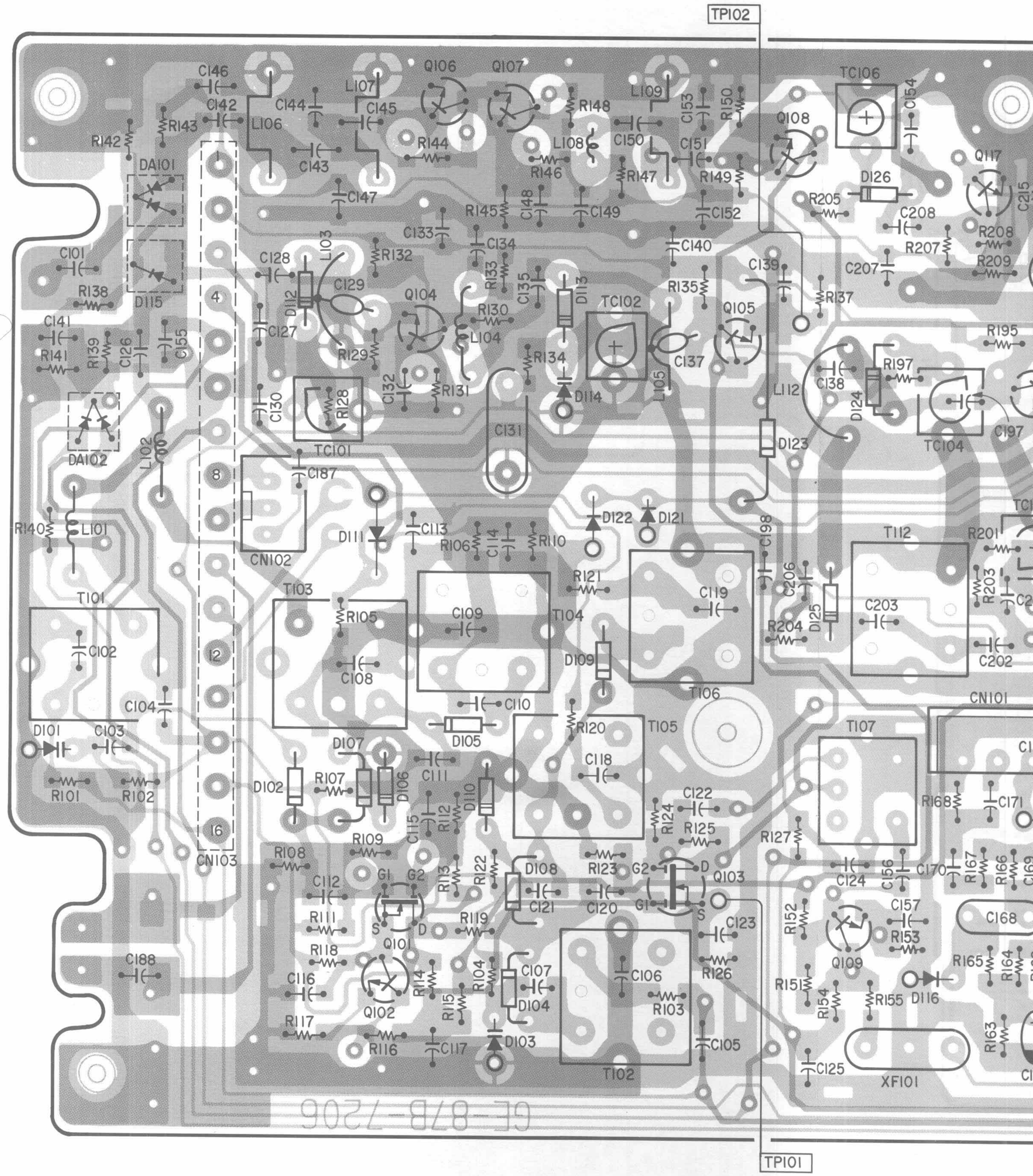

R PCB (Top View)

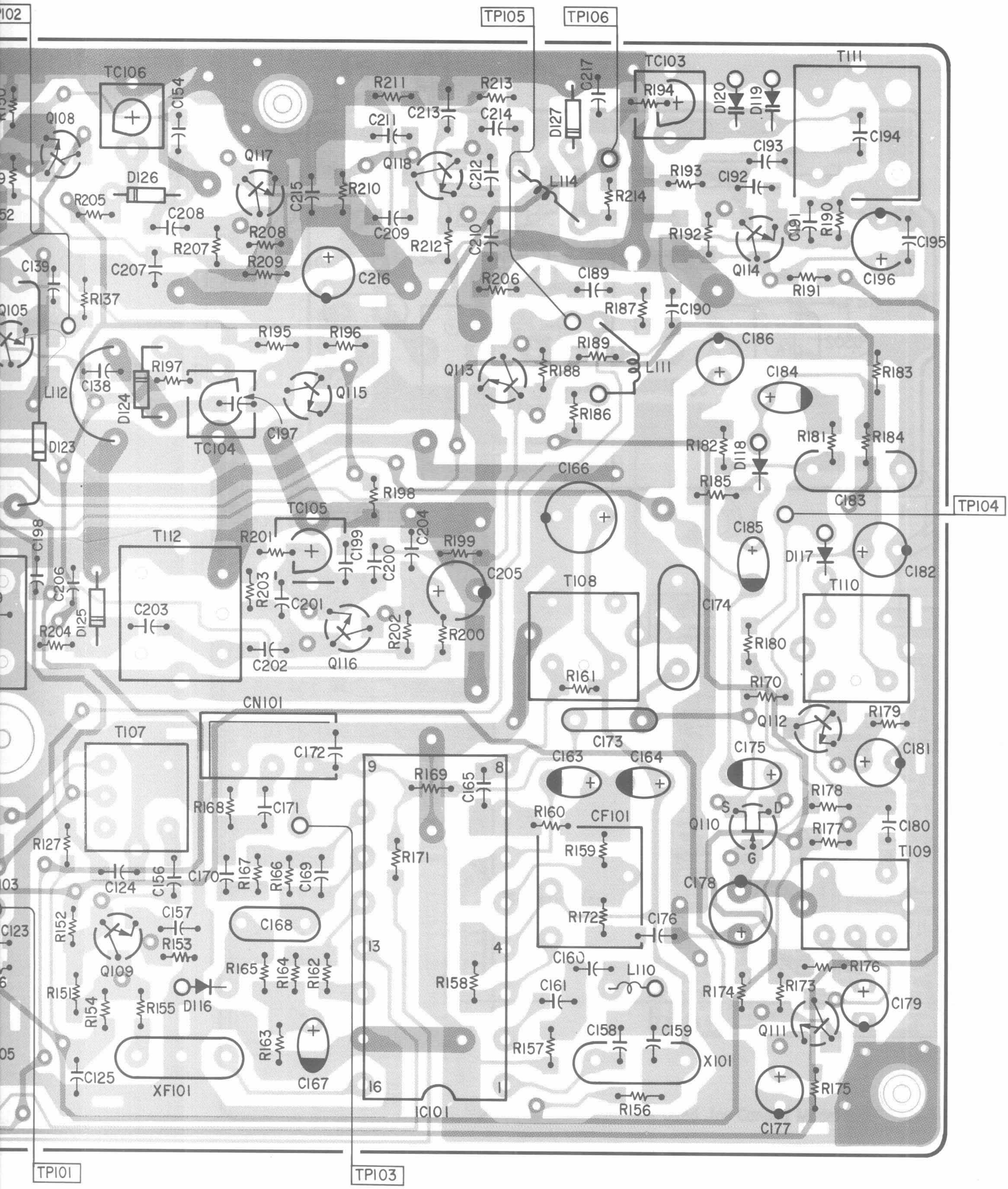

LINEAR PCB (Bot

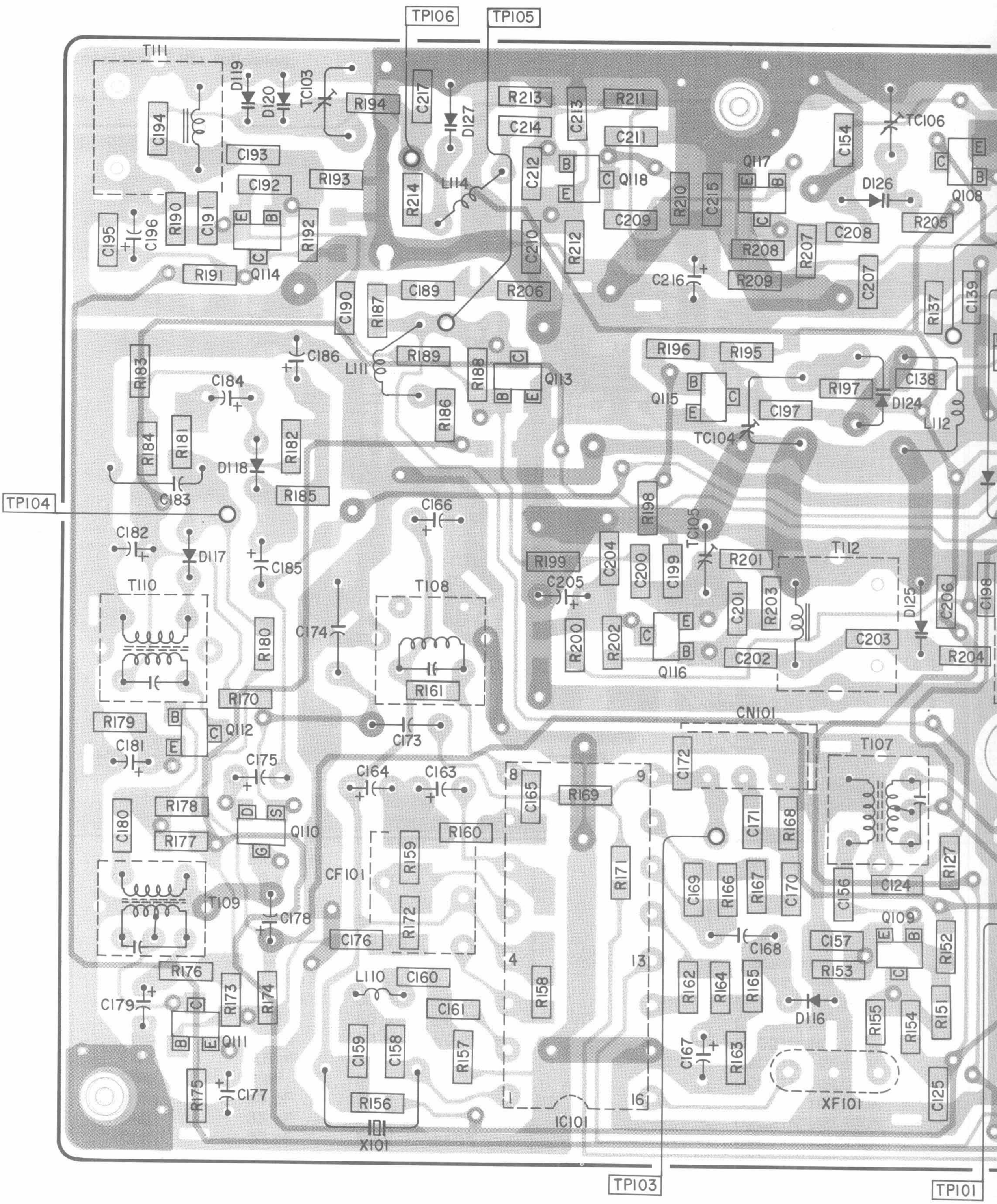

NEAR PCB (Bottom View)

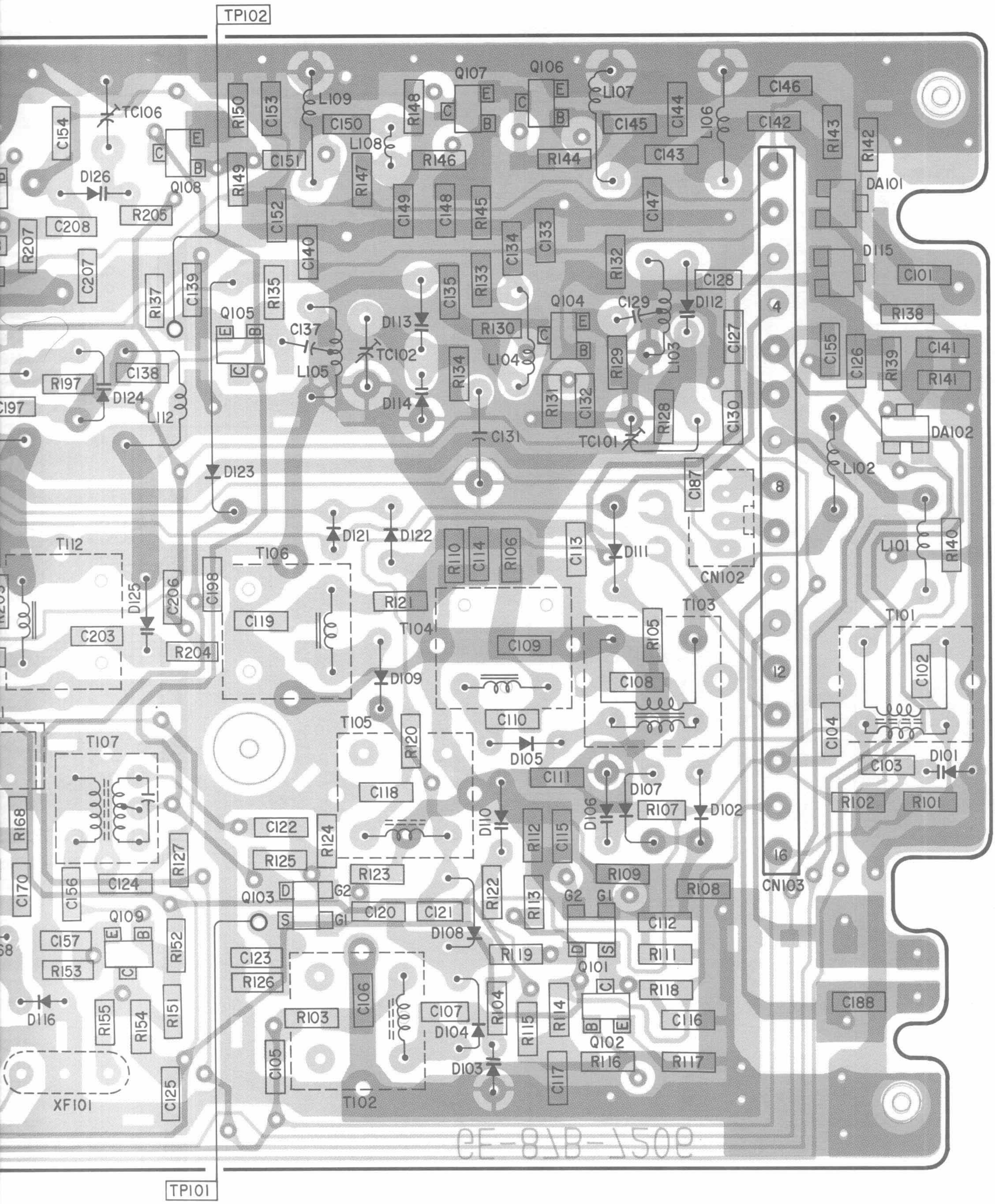

LOGIC PCB (Top View)

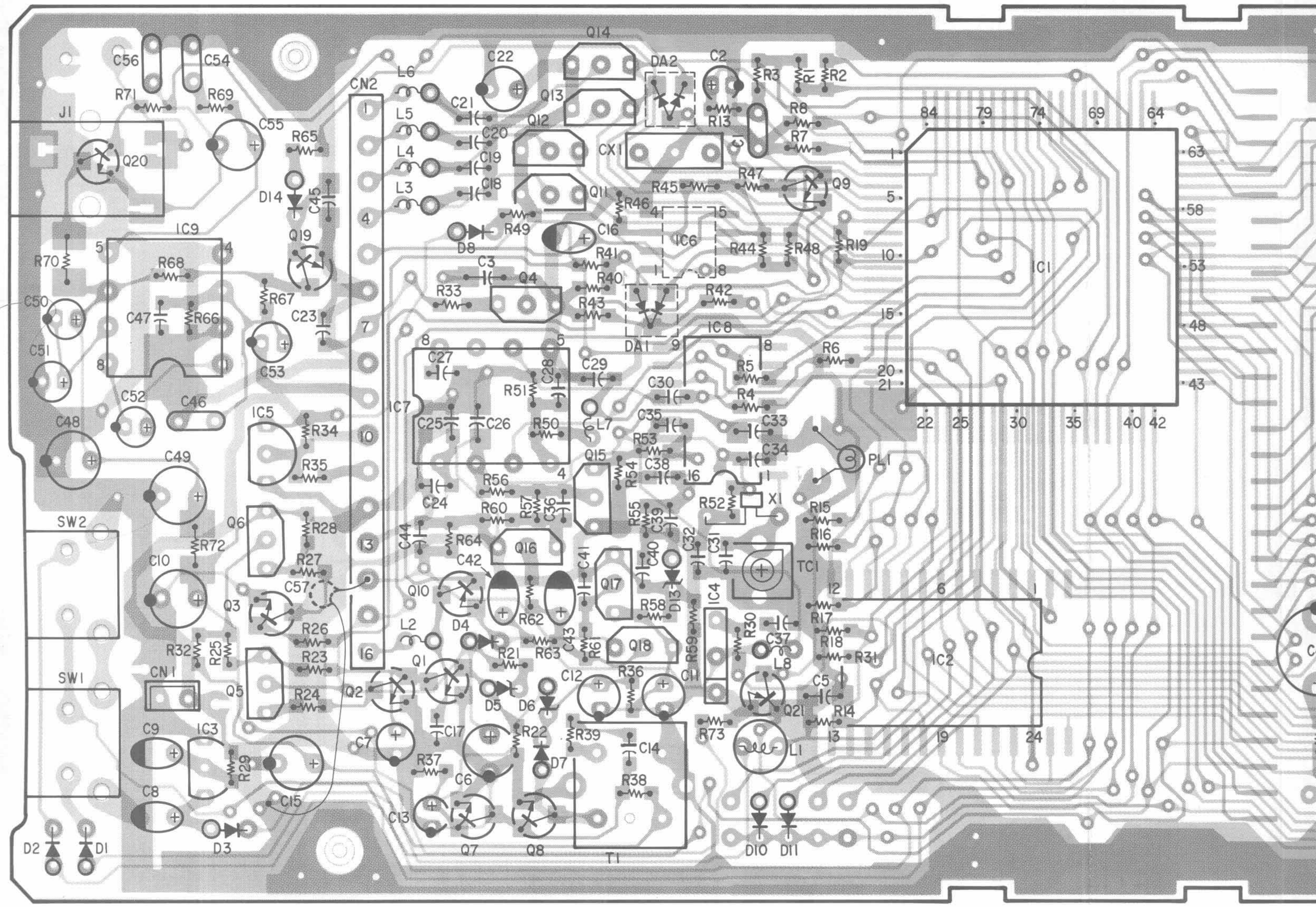

LOGIC PCB (Top View)

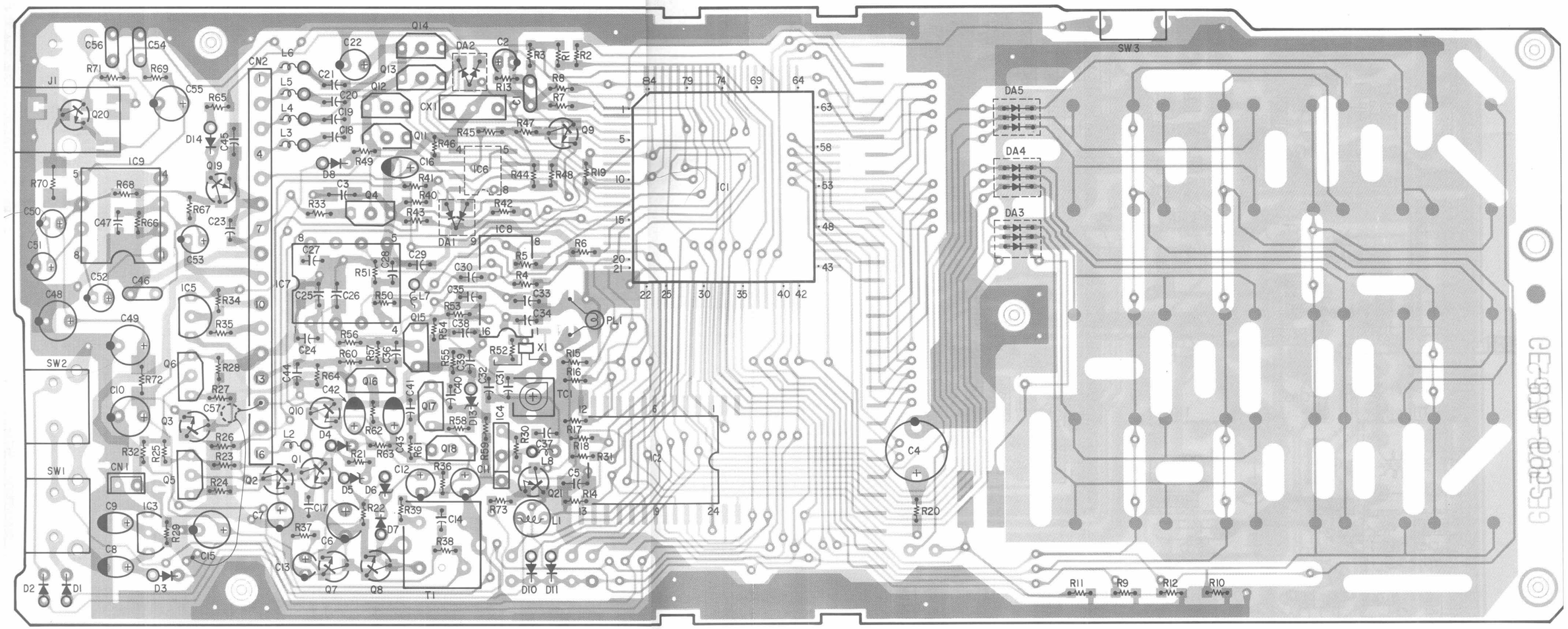

GIC PCB (Top View)

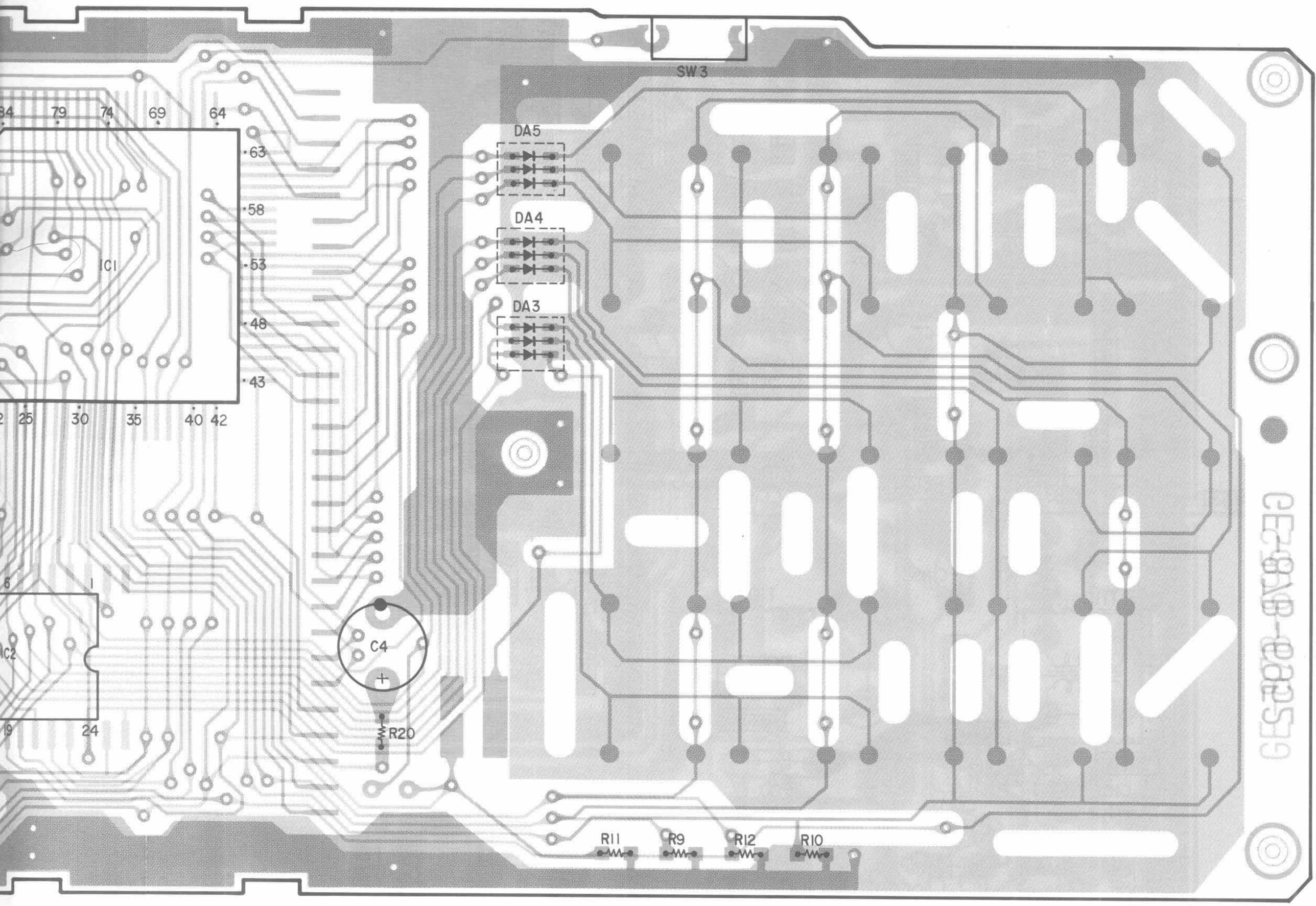

LOGIC PCB (Botto

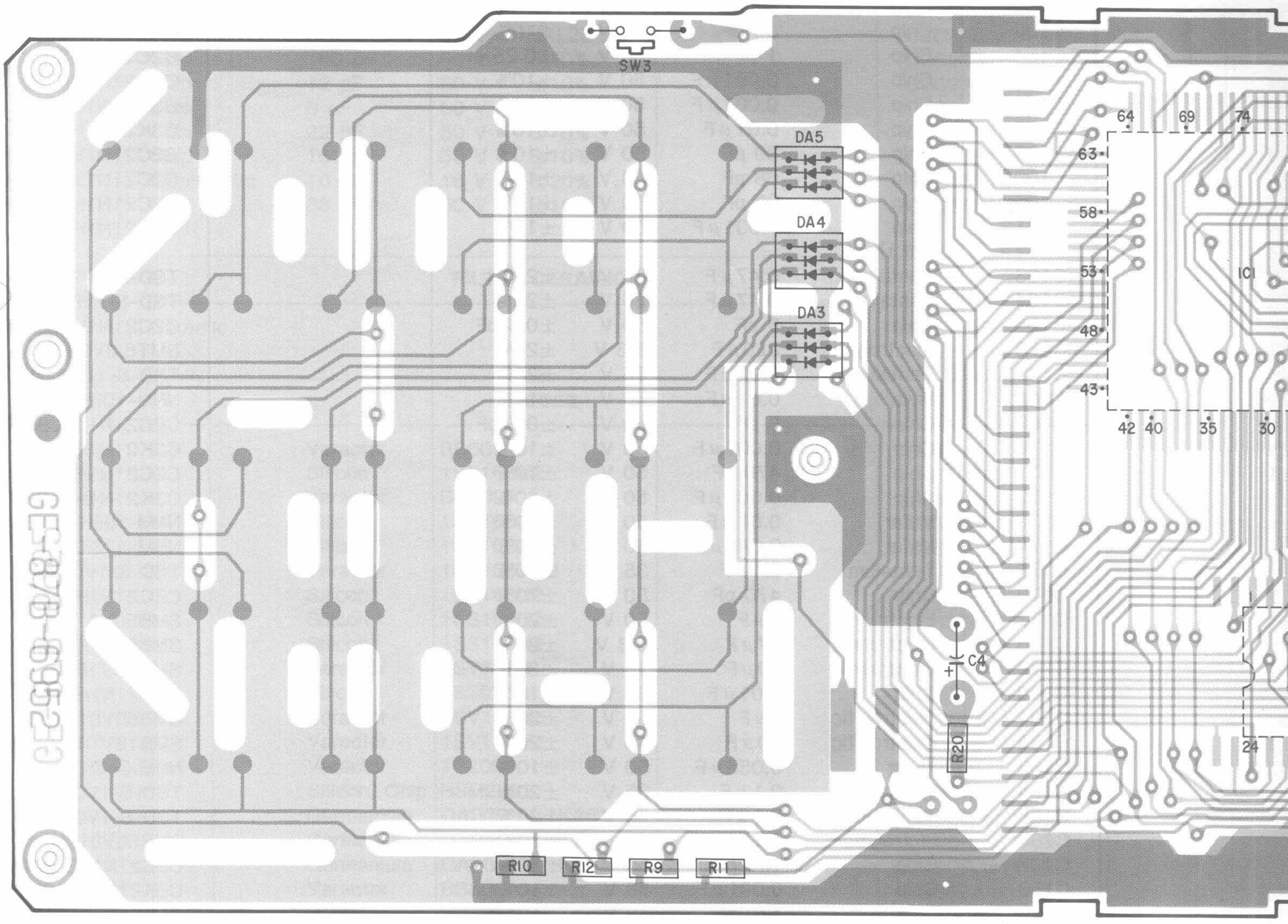

LOGIC PCB (Bottom View)

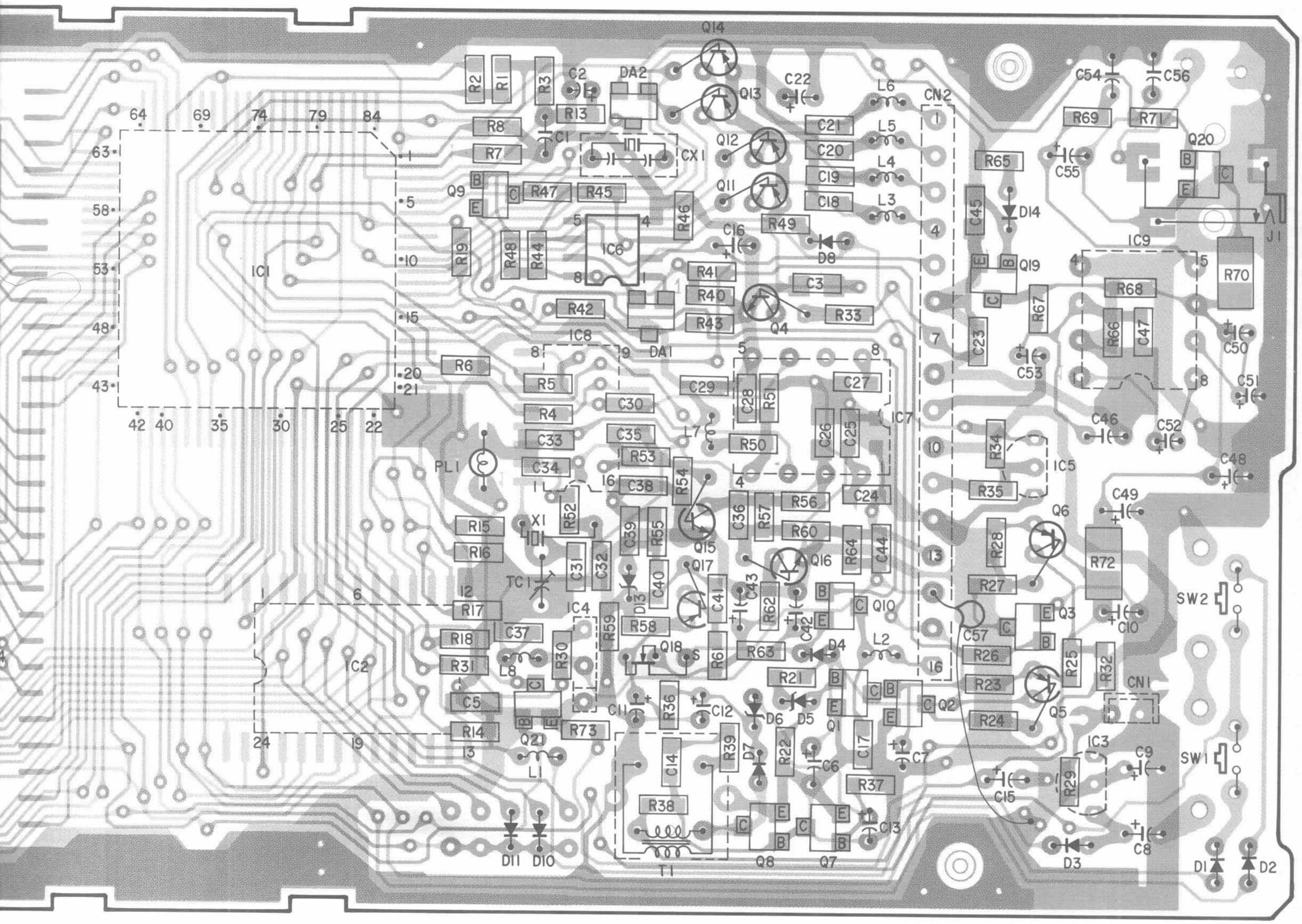

ELECTRICAL PARTS LIST

LINEAR PCB ASSEMBLY

PCB Assembly, Linear Consists of the following:					RS Part No.	MFR's Part No. GA-870-7208 GA-878-7208A (CANADA)
CAPACITORS						
Ref. No.	**Description**				**RS Part No.**	**MFR's Part No.**
*C101	Chip	0.001 μF	50 V	±10%		C3K21N1HR102K
C102	Chip	0.01 μF	50 V	±10%		C3K21N1HR103K
C103	Chip	0.001 μF	50 V	±10%		C3K21N1HR102K
C104	Chip	0.001 μF	50 V	±10%		C3K21N1HR102K
C105	Chip	0.001 μF	50 V	±10%		C3K21N1HR102K
C106	Chip	0.01 μF	50 V	±10%		C3K21N1HR103K
C107	Chip	0.001 μF	50 V	±10%		C3K21N1HR102K
C108	Chip	0.001 μF	50 V	±10%		C3K21N1HR102K
C109	Chip	0.001 μF	50 V	±10%		C3K21N1HR102K
C110	Chip	3 pF	50 V	±0.25 pF		C2C21N1HSL030C
C111	Chip	0.001 μF	50 V	±10%		C3K21N1HR102K
C112	Chip	22 pF	50 V	±10%		C2C21N1HSL220K
C113	Chip	0.001 μF	50 V	±10%		C3K21N1HR102K
C114	Chip	0.001 μF	50 V	±10%		C3K21N1HR102K
C115	Chip	0.001 μF	50 V	±10%		C3K21N1HR102K
C116	Chip	0.001 μF	50 V	±10%		C3K21N1HR102K
C117	Chip	0.001 μF	50 V	±10%		C3K21N1HR102K
C118	Chip	0.001 μF	50 V	±10%		C3K21N1HR102K
C119	Chip	0.001 μF	50 V	±10%		C3K21N1HR102K
C120	Chip	10 pF	50 V	±0.5 pF		C2C2N1HSL100D
C121	Chip	0.001 μF	50 V	±10%		C3K21N1HR102K
C122	Chip	100 pF	50 V	±10%		C2C21N1HSL101K
C123	Chip	0.001 μF	50 V	±10%		C3K21N1HR102K
C124	Chip	0.01 μF	50 V	±10%		C3K21N1HR103K
C125	Chip	0.01 μF	50 V	±10%		C3K21N1HR103K
C126	Chip	0.001 μF	50 V	±10%		C3K21N1HR102K
C127	Chip	2 pF	50 V	±0.25 pF		C2C21N1HSL020C
C128	Chip	5 pF	50 V	±0.25 pF		C2C21N1HSL050C
C129	Ceramic	100 pF	50 V	±10%		HE50SJSL101K
C130	Chip	100 pF	50 V	±10%		C2C21N1HSL101K
C131	Mylar	0.047 μF	50 V	±10%		NNM-473K
C132	Chip	33 pF	50 V	±10%		C2C21N1HSL330K
C133	Chip	0.001 μF	50 V	±10%		C3K21N1HR102K
C134	Chip	0.001 μF	50 V	±10%		C3K21N1HR102K
C135	Chip	10 pF	50 V	±0.5 pF		C2C21N1HSL100D
C136	Not Used					
C137	Ceramic	100 pF	50 V	±10%		HE50SJSL101K
C138	Chip	1 pF	50 V	±0.25 pF		C2C21N1HSL010C
C139	Chip	0.001 μF	50 V	±10%		C3K21N1HR102K
C140	Chip	0.001 μF	50 V	±10%		C3K21N1HR102K
C141	Chip	0.001 μF	50 V	±10%		C3K21N1HR102K
C142	Chip	3 pF	50 V	±0.25 pF		C2C21N1HSL030C
C143	Chip	1.5 pF	50 V	±0.25 pF		C2C21N1HSL1R5C
C144	Chip	0.5 pF	50 V	±0.25 pF		C2C21N1HSL0R5C
C145	Chip	2 pF	50 V	±0.25 pF		C2C21N1HSL020C
C146	ChiP	33 pF	50 V	±10%		C2C21N1HSL330K
C147	Chip	33 pF	50 V	±10%		C2C21N1HSL330K
C148	Chip	33 pF	50 V	±10%		C2C21N1HSL330K
C149	Chip	33 pF	50 V	±10%		C2C21N1HSL330K

Ref. No.	Description				RS Part No.	MFR's Part No.
C150	Chip	1.5 pF	50 V	±0.25 pF		C2C21N1HSL1R5C
C151	Chip	4 pF	50 V	±0.25 pF		C2C21N1HSL040C
C152	Chip	33 pF	50 V	±10%		C2C21N1HSL330K
C153	Chip	33 pF	50 V	±10%		C2C21N1HSL330K
*C154	Chip	1 pF	50 V	±0.25 pF		C2C21N1HSL010C
C155	Chip	0.001 μF	50 V	±10%		C3K21N1HR102K
C156	Chip	0.001 μF	50 V	±10%		C3K21N1HR102K
C157	Chip	0.01 μF	50 V	±10%		C3K21N1HR103K
C158	Chip	39 pF	50 V	±10%		C2C21N1HSL390K
C159	Chip	68 pF	50 V	±10%		C2C21N1HSL680K
C160	Chip	22 pF	50 V	±10%		C2C21N1HSL220K
C161	Chip	0.001 μF	50 V	±10%		C3K21N1HR102K
C162	Not Used					
C163	Tantalum	0.47 μF	35 V	±20%		TSD-S-1VR47M
C164	Tantalum	0.47 μF	35 V	±20%		TSD-S-1VR47M
C165	Chip	8 pF	50 V	±0.5 pF		C2C21N1HSL080D
C166	Electrolytic	220 μF	6.3 V	±20%		SMT6.3V221M
C167	Tantalum	0.22 μF	35 V	±20%		TSD-S-1VR22M
C168	Mylar	0.01 μF	50 V	±10%		NNM-103K
C169	Chip	8 pF	50 V	±0.5 pF		C2C21N1HSL080D
C170	Chip	0.001 μF	50 V	±10%		C3K21N1HR102K
C171	Chip	470 pF	50 V	±10%		C2C21N1HSL471K
C172	Chip	0.001 μF	50 V	±10%		C3K21N1HR102K
C173	Mylar	0.01 μF	50 V	±10%		NNM-103K
C174	Mylar	0.047 μF	50 V	±10%		NNM-473K
C175	Tantalum	0.1 μF	35 V	±20%		TSD-S-1V0R1M
C176	Chip	470 pF	50 V	±10%		C2C21N1HSL471K
C177	Electrolytic	1 μF	50 V	±20%		SMB50V010M
C178	Electrolytic	47 μF	6.3 V	±20%		SMB6.3V470M
C179	Electrolytic	10 μF	16 V	±20%		SMB16V100M
C180	Chip	0.01 μF	50 V	±10%		C3K21N1HR103K
C181	Electrolytic	1 μF	50 V	±20%		SMB50V010M
C182	Electrolytic	10 μF	16 V	±20%		SMB16V100M
C183	Mylar	0.056 μF	50 V	±10%		NNM-563K
C184	Tantalum	0.1 μF	35 V	±20%		TSD-S-1V0R1M
C185	Tantalum	0.1 μF	35 V	±20%		TSD-S-1V0R1M
C186	Elctrolytic	1 μF	50 V	±20%		SMB50V010M
C187	Chip	100 pF	50 V	±10%		C2C21N1HSL101K
C188	Chip	0.001 μF	50 V	±10%		C3K21N1HR102K
C189	Chip	470 pF	50 V	±10%		C2C21N1HSL471K
C190	Chip	5 pF	50 V	±0.25 pF		C2C21N1HSL050C
C191	Chip	47 pF	50 V	±10%		C2C21N1HSL470K
C192	Chip	33 pF	50 V	±10%		C2C21N1HSL330K
C193	Chip	33 pF	50 V	±10%		C2C21N1HSL330K
C194	Chip	0.001 μF	50 V	±10%		C3K21N1HR102K
C195	Chip	0.001 μF	50 V	±10%		C3K21N1HR102K
C196	Electrolytic	10 μF	16 V	±20%		SMB16V100M
C197	Chip	5 pF	50 V	±0.25 pF		C2C21N1HSL050C
C198	Chip	0.001 μF	50 V	±10%		C3K21N1HR102K
C199	Chip	10 pF	50 V	±0.5 pF		C2C21N1HSL100D
C200	Chip	5 pF	50 V	±0.25 pF		C2C21N1HSL050C
C201	Chip	15 pF	50 V	±10%		C2C21N1HSL150K
C202	Chip	47 pF	50 V	±10%		C2C21N1HSL470K
C203	Chip	470 pF	50 V	±10%		C2C21N1HSL471K
C204	Chip	0.001 μF	50 V	±10%		C3K21N1HR102K
C205	Electrolytic	10 μF	16 V	±20%		SMB16V100M
C206	Chip	0.001 μF	50 V	±10%		C3K21N1HR102K

Ref. No.	Description				RS Part No.	MFR's Part No.
C207	Chip	0.001 μF	50 V	±10%		C3K21N1HR102K
*C208	Chip	3 pF	50 V	±0.25 pF		C2C21N1HSL030C
*C209	Chip	5 pF	50 V	±0.25 pF		C2C21N1HSL050C
C210	Chip	5 pF	50 V	±0.25 pF		C2C21N1HSL050C
C211	Chip	100 pF	50 V	±10%		C2C21N1HSL101K
C212	Chip	12 pF	50 V	±10%		C2C21N1HSL120K
C213	Chip	6 pF	50 V	±0.5 pF		C2C21N1HSL060D
C214	Chip	22 pF	50 V	±10%		C2C21N1HSL220K
C215	Chip	100 pF	50 V	±10%		C2C21N1HSL101K
C216	Electrolytic	10 μF	16 V	±20%		SMB16V100M
C217	Chip	33 pF	50 V	±10%		C2C21N1HSL330K
FILTER CERAMIC						
CF101	Ceramic					KBF-455P-15A
DIODES						
D101		Varactor	BB609A			BB609A
D102		Silicon	1SS168U2			1SS168U2
D103		Varactor	BB609A			BB609A
D104		Silicon	1SS168U2			1SS168U2
D105		Silicon	1SS168U2			1SS168U2
D106		Varactor	1SV136AU2			1SV136AU2
D107		Silicon	1SS168U2			1SS168U2
D108		Silicon	1SS168U2			1SS168U2
D109		Silicon	1SS168U2			1SS168U2
D110		Varactor	1SV136AU2			1SV136AU2
D111		Silicon	1S2076A			1S2076A
D112		Varactor	1SV146U2			1SV146U2
D113		Varactor	1SV146U2			1SV146U2
D114		Varactor	1S2090			1S2090
D115		Silicon, Chip	HSM2692			HSM2692
D116		Germanium	OA90R or 1K261			OA90R or 1K261
D117		Germanium	OA90R or 1K261			OA90R or 1K261
D118		Germanium	OA90R or 1K261			OA90R or 1K261
D119		Varactor	BB609A			BB609A
D120		Varactor	BB609A			BB609A
D121		Silicon	1S2076A			1S2076A
D122		Silicon	1S2076A			1S2076A
D123		Silicon	1S2076A			1S2076A
D124		Varactor	1SV146U2			1SV146U2
D125		Varactor	1SV146U2			1SV146U2
D126		Varactor	1SV146U2			1SV146U2
D127		Varactor	1SV146U2			1SV146U2
DA101		Silicon, Chip	HSM2693			HSM2693
DA102		Silicon, Chip	DAN202K			DAN202K
IC						
IC101	TK10420	Linear, Quad.				TK10420

Ref. No.	Description	RS Part No.	MFR's Part No.
	COILS & INDUCTORS		
L101	RFC		4LNC-092
L102	RFC		4LNC-122
L103	Coil RF (UHF Lo)		8LNR-093
L104	RFC		4LNC-122
L105	Coil RF (UHF Lo)		8LNR-093
L106	Coil RF (UHF Hi)		GE-87D-7120
L107	Coil RF (UHF Hi)		GE-87D-7120
L108	RFC		2LNB-253
L109	Coil RF (UHF Hi)		GE-87D-7120
L110	Coil choke 10 μH		LAL03NA100K
L111	Coil choke 0.22 μH		LAL03NAR22M
L112	Coil RF (UHF Lo)		8LNR-093
L113	Stripline on PCB		
L114	Coil VCO (UHF Hi)		2LNB-252
	TRANSISTORS		
Q101	FET, Chip 3SK126(O) MOS		3SK126(O)
Q102	Chip 2SC2712(Y) NPN		2SC2712(Y)
Q103	FET, Chip 3SK136(IV) MOS		3SK136(IV)
Q104	Chip 2SC3356 NPN		2SC3356
Q105	Chip 2SC2732 NPN		2SC2732
Q106	Chip 2SC3356 NPN		2SC3356
Q107	Chip 2SC3356 NPN		2SC3356
Q108	Chip 2SC3356 NPN		2SC3356
Q109	Chip 2SC2714(O) NPN		2SC2714(O)
Q110	FET, Chip 2SK208(O) MOS		2SK208(O)
Q111	Chip 2SC2712(O) NPN		2SC2712(O)
Q112	Chip 2SC2712(O) NPN		2SC2712(O)
Q113	Chip 2SC2714(O) NPN		2SC2714(O)
Q114	Chip 2SC2714(O) NPN		2SC2714(O)
Q115	Chip 2SC3356 NPN		2SC3356
Q116	Chip 2SC2714(O) NPN		2SC2714(0)
Q117	Chip 2SC3356 NPN		2SC3356
Q118	Chip 2SC2734 NPN		2SC2734
	RESISTORS		
R101	Chip 100 ohm 1/10 W ±5%		RCM101J55
R102	Chip 100 kohm 1/10 W ±5%		RCM104J55
R103	Chip 100 ohm 1/10 W ±5%		RCM101J55
R104	Chip 100 kohm 1/10 W ±5%		RCM104J55
R105	Chip 100 ohm 1/10 W ±5%		RCM101J55
R106	Chip 100 ohm 1/10 W ±5%		RCM101J55
R107	Chip 47 kohm 1/10 W ±5%		RCM473J55
R108	Chip 4.7 kohm 1/10 W ±5%		RCM472J55
R109	Chip 47 kohm 1/10 W ±5%		RCM473J55
R110	Chip 10 kohm 1/10 W ±5%		RCM103J55
R111	Chip 470 kohm 1/10 W ±5%		RCM474J55
R112	Chip 47 kohm 1/10 W ±5%		RCM473J55
R113	Chip 47 kohm 1/10 W ±5%		RCM473J55
R114	Chip 100 kohm 1/10 W ±5%		RCM104J55
R115	Chip 220 ohm 1/10 W ±5%		RCM221J55

Ref. No.	Description				RS Part No.	MFR's Part No.
R116	Chip	10 ohm	1/10 W	±5%		RCM100J55
R117	Chip	10 ohm	1/10 W	±5%		RCM100J55
R118	Chip	100 kohm	1/10 W	±5%		RCM104J55
R119	Chip	10 ohm	1/10 W	±5%		RCM100J55
R120	Chip	100 ohm	1/10 W	±5%		RCM101J55
R121	Chip	100 ohm	1/10 W	±5%		RCM101J55
R122	Chip	47 kohm	1/10 W	±5%		RCM473J55
R123	Chip	100 kohm	1/10 W	±5%		RCM104J55
R124	Chip	47 kohm	1/10 W	±5%		RCM473J55
R125	Chip	470 kohm	1/10 W	±5%		RCM474J55
R126	Chip	2.2 kohm	1/10 W	±5%		RCM222J55
R127	Chip	100 ohm	1/10 W	±5%		RCM101J55
R128	Chip	47 kohm	1/10 W	±5%		RCM473J55
R129	Chip	470 ohm	1/10 W	±5%		RCM471J55
R130	Chip	10 ohm	1/10 W	±5%		RCM100J55
R131	Chip	4.7 kohm	1/10 W	±5%		RCM472J55
R132	Chip	10 kohm	1/10 W	±5%		RCM103J55
R133	Chip	100 ohm	1/10 W	±5%		RCM101J55
R134	Chip	47 kohm	1/10 W	±5%		RCM473J55
R135	Chip	1 Mohm	1/10 W	±5%		RCM105J55
R136	Not Used					
R137	Chip	2.2 kohm	1/10 W	±5%		RCM222J55
R138	Chip	100 kohm	1/10 W	±5%		RCM104J55
R139	Chip	1 kohm	1/10 W	±5%		RCM102J55
R140	Chip	100 ohm	1/10 W	±5%		RCM101J55
R141	Chip	47 kohm	1/10 W	±5%		RCM473J55
R142	Chip	3.3 kohm	1/10 W	±5%		RCM332J55
R143	Chip	1 kohm	1/10 W	±5%		RCM102J55
R144	Chip	10 kohm	1/10 W	±5%		RCM103J55
R145	Chip	10 kohm	1/10 W	±5%		RCM103J55
R146	ChiP	4.7 kohm	1/10 W	±5%		RCM472J55
R147	Chip	100 ohm	1/10 W	±5%		RCM101J55
R148	Chip	47 ohm	1/10 W	±5%		RCM470J55
R149	Chip	1 Mohm	1/10 W	±5%		RCM105J55
*R150	Chip	100 ohm	1/10 W	±5%		RCM101J55
R151	Chip	220 kohm	1/10 W	±5%		RCM224J55
R152	Chip	3.9 kohm	1/10 W	±5%		RCM392J55
R153	Chip	1 kohm	1/10 W	±5%		RCM102J55
R154	Chip	2.2 kohm	1/10 W	±5%		RCM222J55
R155	Chip	2.2 kohm	1/10 W	±5%		RCM222J55
R156	Chip	47 ohm	1/10 W	±5%		RCM470J55
R157	Chip	1 kohm	1/10 W	±5%		RCM102J55
R158	Chip	1.8 kohm	1/10 W	±5%		RCM182J55
R159	Chip	1.8 kohm	1/10 W	±5%		RCM182J55
R160	Chip	47 kohm	1/10 W	±5%		RCM473J55
R161	Chip	22 kohm	1/10 W	±5%		RCM223J55
R162	Chip	27 kohm	1/10 W	±5%		RCM273J55
R163	Chip	100 kohm	1/10 W	±5%		RCM104J55
R164	Chip	2.2 kohm	1/10 W	±5%		RCM222J55
R165	Chip	4.7 kohm	1/10 W	±5%		RCM472J55
R166	Chip	1 Mohm	1/10 W	±5%		RCM105J55
R167	Chip	2.2 kohm	1/10 W	±5%		RCM222J55
R168	Chip	10 kohm	1/10 W	±5%		RCM103J55
R169	Chip	10 kohm	1/10 W	±5%		RCM103J55
R170	Chip	47 kohm	1/10 W	±5%		RCM473J55
R171	Chip	100 kohm	1/10 W	±5%		RCM104J55
R172	Chip	3.3 kohm	1/10 W	±5%		RCM332J55

Ref. No.	Description			RS Part No.	MFR's Part No.
R173	Chip	270 kohm	1/10 W ±5%		RCM274J55
R174	Chip	5.6 kohm	1/10 W ±5%		RCM562J55
R175	Chip	470 ohm	1/10 W ±5%		RCM471J55
R176	Chip	100 ohm	1/10 W ±5%		RCM101J55
R177	Chip	270 kohm	1/10 W ±5%		RCM274J55
R178	Chip	5.6 kohm	1/10 W ±5%		RCM562J55
R179	Chip	47 ohm	1/10 W ±5%		RCM470J55
R180	Chip	10 kohm	1/10 W ±5%		RCM103J55
R181	Chip	4.7 kohm	1/10 W ±5%		RCM472J55
R182	Chip	10 kohm	1/10 W ±5%		RCM103J55
R183	Chip	10 kohm	1/10 W ±5%		RCM103J55
R184	Chip	100 kohm	1/10 W ±5%		RCM104J55
R185	Chip	10 kohm	1/10 W ±5%		RCM103J55
R186	Chip	100 ohm	1/10 W ±5%		RCM101J55
R187	Chip	47 ohm	1/10 W ±5%		RCM470J55
R188	Chip	100 kohm	1/10 W ±5%		RCM104J55
*R189	Chip	470 ohm	1/10 W ±5%		RCM471J55
*R190	Chip	1 kohm	1/10 W ±5%		RCM102J55
R191	Chip	100 ohm	1/10 W ±5%		RCM101J55
R192	Chip	15 kohm	1/10 W ±5%		RCM153J55
R193	Chip	22 kohm	1/10 W ±5%		RCM223J55
R194	Chip	47 kohm	1/10 W ±5%		RCM473J55
R195	Chip	1 kohm	1/10 W ±5%		RCM102J55
R196	Chip	470 kohm	1/10 W ±5%		RCM474J55
R197	Chip	47 kohm	1/10 W ±5%		RCM473J55
R198	Chip	1 kohm	1/10 W ±5%		RCM102J55
R199	Chip	220 ohm	1/10 W ±5%		RCM221J55
R200	Chip	100 ohm	1/10 W ±5%		RCM101J55
*R201	ChiP	1 kohm	1/10 W ±5%		RCM102J55
R202	Chip	15 kohm	1/10 W ±5%		RCM153J55
R203	Chip	22 kohm	1/10 W ±5%		RCM223J55
R204	Chip	47 kohm	1/10 W ±5%		RCM473J55
R205	Chip	47 kohm	1/10 W ±5%		RCM473J55
R206	ChiP	470 ohm	1/10 W ±5%		RCM471J55
R207	Chip	1 kohm	1/10 W ±5%		RCM102J55
R208	Chip	100 kohm	1/10 W ±5%		RCM104J55
R209	Chip	100 ohm	1/10 W ±5%		RCM101J55
R210	Chip	100 ohm	1/10 W ±5%		RCM101J55
R211	Chip	15 kohm	1/10 W ±5%		RCM153J55
*R212	Chip	470 ohm	1/10 W ±5%		RCM471J55
R213	ChiP	22 kohm	1/10 W ±5%		RCM223J55
R214	Chip	10 kohm	1/10 W ±5%		RCM103J55
TRANSFORMERS					
T101	Coil, RF (VHF Lo)				7SSR-278
T102	Coil, RF (VHF Lo)				7SSR-278
T103	Coil, RF (Air)				7SSR-294
T104	Coil, RF (VHF Hi)				7SSR-290
T105	Coil, RF (Air)				7SSR-289
T106	Coil, RF (VHF Hi)				7SSR-290
T107	Coil, IF (10.7 MHz)				5SSI-291
T108	Coil, DET. (455 kHz)				GR-E823
T109	Coil, IF (455 kHz)				5SSI-292

Ref. No.	Description	RS Part No.	MFR's Part No.
T110	Coil, DET. (455 kHz)		5SSI-293
T111	Coil, VCO (VHF Lo)		7SSO-281
T112	Coil, VCO(Air, VHF Hi, UHF Lo)		7SSO-282
	TRIMMERS		
TC101	Cap. trimmer 10 pF		ECR-LA010A12
TC102	Cap. trimmer 20 pF		ECR-LA020E12
TC103	Cap. trimmer 10 pF		ECR-LA010A12
TC104	Cap. trimmer 20 pF		ECR-LA020E12
TC105	Cap. trimmer 10 pF		ECR-LA010A12
TC106	Cap. trimmer 6 pF		ECR-LA006A12
	CRYSTAL		
X101	H5717 (10.245 MHz)		H5717
	FILTER CRYSTAL		
XF101	H5718 (10.7 MHz)		H5718
	MISCELLANEOUS		
CN101	Connector, Pin (3 Pin Male)		PI22A03M
CN102	Connector, Pin (3 Pin Male)		IL-Y-3P-S15T2-EF
CN103	Connector, Pin (16 Pin Male)		SD-5040-16D
㉒	Plate, VCO Shield		GE-87D-7237
㉓	Plate, VCO Shield (800 MHz)		GE-87D-7238
㉔	Fiber, VCO Shield		GE-87D-7255
㉕	Fiber, VCO Shield (800 MHz)		GE-87D-7259
	Parts below are only for CANADA version. (* denotes changes)		
*C101	Chip 100 pF 50 V ±10%		C2C21N1HSL101K
*C154	Chip 3 pF 50 V ±0.25 pF		C2C21N1HSL030C
*C208	Chip 1 pF 50 V ±0.25 pF		C2C21N1HSL010C
*C209	Chip 2 pF 50 V ±0.25 pF		C2C21N1HSL020C
L801	Coil, Choke 0.22 μH		LAL03NAR22M
*R150	Chip 47 ohm 1/10 W ±5%		RCM470J55
*R189	Chip 1 kohm 1/10 W ±5%		RCM102J55
*R190	Chip 1.5 kohm 1/10 W ±5%		RCM152J55
*R201	Chip 1.5 kohm 1/10 W ±5%		RCM152J55
*R212	Chip 1 kohm 1/10 W ±5%		RCM102J55
R801	Chip 4.7 kohm 1/10 W ±5%		RCM472J55
R802	Chip 4.7 kohm 1/10 W ±5%		RCM472J55
R803	Chip 4.7 kohm 1/10 W ±5%		RCM472J55
㉟	UHF Hi Shield Plate		GE-88D-7665

LOGIC PCB ASSEMBLY

PCB Assembly, Logic Consists of the following:					RS Part No.	MFR's Part No. GA-87B-6954
CAPACITORS						
Ref. No.	**Description**				**RS Part No.**	**MFR's Part No.**
C1	Multilayer	0.1 μF	50 V	+80%−20%		RPE131F104Z50
C2	Electrolytic	4.7 μF	35 V	±20%		SMB35V4R7M
C3	Chip	0.1 μF	25 V	+80%−20%		C3K21N1EF104Z
C4	Electrolytic	0.047F	5.5 V	+80%−20%		AC206201G473 Z5R5
C5	Chip	0.1 μF	25 V	+80%−20%		C3K21N1EF104Z
C6	Electrolytic	220 μF	6.3 V	±20%		SMT6.3V221M
C7	Electrolytic	10 μF	16 V	±20%		SMB16V100M
C8	Tantalum	0.1 μF	35 V	±20%		TSD-S-1V0R1M
C9	Tantalum	0.1 μF	35 V	±20%		TSD-S-1V0R1M
C10	Electrolytic	220 μF	10 V	±20%		SM10V221M
C11	Electrolytic	4.7 μF	35 V	±20%		SMB35V4R7M
C12	Electrolytic	0.47 μF	50 V	±20%		SMB50VR47M
C13	Electrolytic	10 μF	16 V	±20%		SMB16V100M
C14	Chip	0.001 μF	50 V	±10%		C3K21N1HR102K
C15	Electrolytic	47 μF	10 V	±20%		SMB10V470M
C16	Tantalum	0.1 μF	35 V	±20%		TSD-S-1V0R1M
C17	Chip	0.001 μF	50 V	±10%		C3K21N1HR102K
C18	Chip	0.001 μF	50 V	±10%		C3K21N1HR102K
C19	Chip	0.001 μF	50 V	±10%		C3K21N1HR102K
C20	Chip	0.001 μF	50 V	±10%		C3K21N1HR102K
C21	Chip	0.001 μF	50 V	±10%		C3K21N1HR102K
C22	Electrolytic	220 μF	6.3 V	±20%		SMT6.3V221M
C23	Chip	0.001 μF	50 V	±10%		C3K21N1HR102K
C24	Chip	470pF	50 V	±10%		C2C21N1HSL471K
C25	Chip	10pF	50 V	±0.5pF		C2C21N1HSL100D
C26	Chip	0.1 μF	25 V	+80%−20%		C3K21N1EF104Z
C27	Chip	0.001 μF	50 V	±10%		C3K21N1HR102K
C28	Chip	47 pF	50 V	±10%		C2C21N1HSL470K
C29	Chip	220 pF	50 V	±10%		C2C21N1HSL221K
C30	Chip	0.001 μF	50 V	±10%		C3K21N1HR102K
C31	Chip	47 pF	50 V	±10%		C2C21N1HSL470K
C32	Chip	56 pF	50 V	±10%		C2C21N1HSL560K
C33	Chip	0.1 μF	25 V	+80%−20%		C3K21N1EF104Z
C34	Chip	0.001 μF	50 V	±10%		C3K21N1HR102K
C35	Chip	470 pF	50 V	±10%		C2C21N1HSL471K
C36	Chip	220 pF	50 V	±10%		C2C21N1HSL221K
C37	Chip	0.01 μF	50 V	±20%		C3K21N1HR103M
C38	Chip	220 pF	50 V	±10%		C2C21N1HSL221K
C39	Chip	22 pF	50 V	±10%		C2C21N1HSL220K
C40	Chip	0.0047 μF	50 V	±10%		C3K21N1HR472K
C41	Chip	56 pF	50 V	±10%		C2C21N1HSL560K
C42	Tantalum	1 μF	35 V	±20%		TSD-S-1V010M
C43	Tantalum	0.33 μF	35 V	±20%		TSD-S-1VR33M
C44	Chip	10 pF	50 V	±0.5 pF		C2C21N1HSL100D
C45	Chip	0.1 μF	25 V	+80%−20%		C3K21N1EF104Z
C46	Multilayer	0.1 μF	50 V	+80%−20%		RPE131F104Z50
C47	Chip	0.001 μF	50 V	±10%		C3K21N1HR102K
C48	Electrolytic	220 μF	10 V	±20%		SM10V221M
C49	Electrolytic	220 μF	10 V	±20%		SM10V221M
C50	Electrolytic	4.7 μF	35 V	±20%		SMB35V4R7M
C51	Electrolytic	10 μF	16 V	±20%		SMB16V100M

Ref. No.	Description				RS Part No.	MFR's Part No.
C52	Electrolytic	2.2 μF	50 V	±20%		SMB50V2R2M
C53	Electrolytic	1 μF	50 V	±20%		SMB50V010M
C54	Multilayer	0.1 μF	50 V	+80%−20%		RPE131F104Z50
C55	Electrolytic	100 μF	10 V	±20%		SMB10V101M
C56	Multilayer	0.1 μF	50 V	+80%−20%		RPE131F104Z50
RESONATOR CERAMIC						
CX1	Ceramic Resonator (2 MHz)					EFO-FC2004A4
DIODES						
D1		1S2076A	Silicon			1S2076A
D2		1S2076A	Silicon			1S2076A
D3		SD-103	Silicon			SD-103
D4		1S2076A	Silicon			1S2076A
D5		HZ6A1L	Zener			HZ6A1L
D6		HZ16-3L	Zener			HZ16-3L
D7		1S2076A	Silicon			1S2076A
D8		1S2076A	Silicon			1S2076A
D9	Not Used					
D10		1S2076A	Silicon			1S2076A
D11		1S2076A	Silicon			1S2076A
D12	Not Used					
D13		HZ12B2L	Zener			HZ12B2L
D14		1S2076A	Silicon			1S2076A
DA1	Chip	DAN202K	Silicon			DAN202K
DA2	Chip	DAP202K	Silicon			DAP202K
DA3	Chip	IMN10	Silicon			IMN10
DA4	Chip	IMN10	Silicon			IMN10
DA5	Chip	IMN10	Silicon			IMN10
IC's						
IC1	CPU		C-MOS			GRE-0620A
IC2	RAM 16K		C-MOS			TC5517CF-20
IC3	Regulator		C-MOS			S-81250HG
IC4	DET./Low Batt.		C-MOS			MN1280S
IC5	DET. Voltage Regulator		BIPOLAR			S-8054HN
IC6	Zeromatic Cont.		BIPOLAR			μPC358G
IC7	Pre-Scalor		BIPOLAR			MB501LVP-G
IC8	PLL		C-MOS			MB87006APF-G-BND
IC9	Audio Amp.		BIPOLAR			LM386N-1
INDUCTORS						
L1	Coil, choke 1 mH					FL5H102K
L2	Coil, choke 100 μH					LAL03NA101K
L3	Coil, choke 100 μH					LAL03NA101K
L4	Coil, choke 100 μH					LAL03NA101K
L5	Coil, choke 100 μH					LAL03NA101K
L6	Coil, choke 100 μH					LAL03NA101K

Ref. No.	Description	RS Part No.	MFR's Part No.
L7 L8	Coil, choke 10 μH Coil, choke 100 μH		LAL03NA100K LAL03NA101K
	LCD		
LCD1 ㉖	LCD		EDD063ZA8A4H
	LAMP		
PL1	Lamp (6 V-35 mA)		TI-6V35MA-WT
	TRANSISTORS		
Q1	Chip 2SC2712(Y) NPN		2SC2712(Y)
Q2	Chip 2SC2712(Y) NPN		2SC2712(Y)
Q3	Chip 2SC2712(Y) NPN		2SC2712(Y)
Q4	2SC2458(GR) NPN		2SC2458(GR)
Q5	2SA1150(Y) PNP		2SA1150(Y)
Q6	2SA1150(Y) PNP		2SA1150(Y)
Q7	Chip 2SC2712(GR) NPN		2SC2712(GR)
Q8	Chip 2SC2712(GR) NPN		2SC2712(GR)
Q9	Chip 2SC2712(GR) NPN		2SC2712(GR)
Q10	Chip RN2402 or UN2111 PNP		RN2402 or UN2111
Q11	RN2202 or UN4111 PNP		RN2202 or UN4111
Q12	RN2202 or UN4111 PNP		RN2202 or UN4111
Q13	RN2202 or UN4111 PNP		RN2202 or UN4111
Q14	RN2202 or UN4111 PNP		RN2202 or UN4111
Q15	2SC2458(GR) NPN		2SC2458(GR)
Q16	2SC2458(GR) NPN		2SC2458(GR)
Q17	2SA1150(Y) PNP		2SA1150(Y)
Q18	F.E.T. 2SK118(O)or(R) MOS		2SK118(0)or(R)
Q19	Chip 2SC2712(Y) NPN		2SC2712(Y)
Q20	Chip 2SC2712(Y) NPN		2SC2712(Y)
Q21	Chip RN2402 or UN2111 PNP		RN2402 or UN2111
	RESISTORS		
R1	ChiP 10 kohm 1/10 W ±5%		RCM103J55
R2	Chip 10 kohm 1/10 W ±5%		RCM103J55
R3	Chip 10 kohm 1/10 W ±5%		RCM103J55
R4	Chip 4.7 kohm 1/10 W ±5%		RCM472J55
R5	Chip 10 kohm 1/10 W ±5%		RCM103J55
R6	Chip 10 kohm 1/10 W ±5%		RCM103J55
R7	Chip 47 kohm 1/10 W ±5%		RCM473J55
R8	ChiP 47 kohm 1/10 W ±5%		RCM473J55
R9	Chip 47 kohm 1/10 W ±5%		RCM473J55
R10	Chip 47 kohm 1/10 W ±5%		RCM473J55
R11	Chip 47 kohm 1/10 W ±5%		RCM473J55

Ref. No.	Description			RS Part No.	MFR's Part No.
R12	Chip	47 kohm	1/10 W ±5%		RCM473J55
R13	Chip	100 kohm	1/10 W ±5%		RCM104J55
R14	Chip	47 kohm	1/10 W ±5%		RCM473J55
R15	Chip	47 kohm	1/10 W ±5%		RCM473J55
R16	Chip	47 kohm	1/10 W ±5%		RCM473J55
R17	Chip	47 kohm	1/10 W ±5%		RCM473J55
R18	Chip	47 kohm	1/10 W ±5%		RCM473J55
R19	Chip	100 kohm	1/10 W ±5%		RCM104J55
R20	Chip	470 ohm	1/10 W ±5%		RCM471J55
R21	Chip	1 kohm	1/10 W ±5%		RCM102J55
R22	Chip	22 kohm	1/10 W ±5%		RCM223J55
R23	Chip	47 kohm	1/10 W ±5%		RCM473J55
R24	Chip	2.2 kohm	1/10 W ±5%		RCM222J55
R25	Chip	10 ohm	1/10 W ±5%		RCM100J55
R26	Chip	47 kohm	1/10 W ±5%		RCM473J55
R27	Chip	10 kohm	1/10 W ±5%		RCM103J55
R28	Chip	47 kohm	1/10 W ±5%		RCM473J55
R29	Chip	47 ohm	1/10 W ±5%		RCM470J55
R30	Chip	15 kohm	1/10 W ±5%		RCM153J55
R31	Chip	100 kohm	1/10 W ±5%		RCM104J55
R32	Chip	10 ohm	1/10 W ±5%		RCM100J55
R33	Chip	47 kohm	1/10 W ±5%		RCM473J55
R34	Chip	150 kohm	1/10 W ±5%		RCM154J55
R35	Chip	10 kohm	1/10 W ±5%		RCM103J55
R36	Chip	100 ohm	1/10 W ±5%		RCM101J55
R37	Chip	22 kohm	1/10 W ±5%		RCM223J55
R38	Chip	33 kohm	1/10 W ±5%		RCM333J55
R39	Chip	220 ohm	1/10 W ±5%		RCM221J55
R40	Chip	100 kohm	1/10 W ±5%		RCM104J55
R41	Chip	10 kohm	1/10 W ±5%		RCM103J55
R42	Chip	10 kohm	1/10 W ±5%		RCM103J55
R43	Chip	47 kohm	1/10 W ±5%		RCM473J55
R44	Chip	3.3 kohm	1/10 W ±5%		RCM332J55
R45	Chip	2.7 kohm	1/10 W ±5%		RCM272J55
R46	Chip	1.5 kohm	1/10 W ±5%		RCM152J55
R47	Chip	2.2 kohm	1/10 W ±5%		RCM222J55
R48	Chip	10 kohm	1/10 W ±5%		RCM103J55
R49	Chip	10 ohm	1/10 W ±5%		RCM100J55
R50	Chip	220 ohm	1/10 W ±5%		RCM221J55
R51	Chip	2.2 kohm	1/10 W ±5%		RCM222J55
R52	Chip	8.2 kohm	1/10 W ±5%		RCM822J55
R53	Chip	4.7 kohm	1/10 W ±5%		RCM472J55
R54	Chip	10 kohm	1/10 W ±5%		RCM103J55
R55	Chip	4.7 kohm	1/10 W ±5%		RCM472J55
R56	Chip	1 kohm	1/10 W ±5%		RCM102J55
R57	Chip	4.7 kohm	1/10 W ±5%		RCM472J55
R58	Chip	4.7 kohm	1/10 W ±5%		RCM472J55
R59	Chip	470 kohm	1/10 W ±5%		RCM474J55
R60	Chip	4.7 kohm	1/10 W ±5%		RCM472J55
R61	Chip	560 ohm	1/10 W ±5%		RCM561J55
R62	Chip	560 ohm	1/10 W ±5%		RCM561J55
R63	Chip	2.2 kohm	1/10 W ±5%		RCM222J55
R64	Chip	22 kohm	1/10 W ±5%		RCM223J55
R65	Chip	10 kohm	1/10 W ±5%		RCM103J55
R66	Chip	47 kohm	1/10 W ±5%		RCM473J55
R67	Chip	220 kohm	1/10 W ±5%		RCM224J55
R68	Chip	47 kohm	1/10 W ±5%		RCM473J55

Ref. No.	Description	RS Part No.	MFR's Part No.
R69	Chip 10 ohm 1/10 W ±5%		RCM100J55
R70	Chip 470 ohm 1/4 W ±5%		RCP471J55
R71	Chip 10 kohm 1/10 W ±5%		RCM103J55
R72	Chip 33 ohm 1/4 W ±5%		RCP330J55
R73	ChiP 82 ohm 1/10 W ±5%		RCM820J55
	TRANSFORMER		
T1	DC/DC transformer		7PSO-244
	TRIMMER		
TC1	Cap. trimmer 20 pF		ECR-LA020E12
	CRYSTAL		
X1	Crystal (6.4 MHz)		GE-87D-7232
	MISCELLANEOUS		
CN1	Connector, Pin (2 Pin Male)		PI22A02M
CN2	Connector, Housing (16 Pin Female)		5224-16CHPB
J1	Jack, Earphone		HSJ0836-01-500
SW1	Switch, Push (Remote) (Manual)		SKHHLM
SW2	Switch, Push (Remote) (Scan)		SKHHLM
SW3	Switch, Push (Reset)		SKHLAC
㉗	Connevtor, LCD		GE-87D-7017
㉘	Reflector, LCD		GE-87D-7006
㉙	Holder, LCD		GE-87D-7013
㉚	Plate, Logic Shield		GE-87D-7236
㉛	Fiber, Logic Shield		GE-87D-7235

POWER JACK PCB ASSEMBLY

PCB Assembly, Jack, Power Consists of the following:					RS Part No.	MFR's Part No. GA-87C-7003
CAPACITORS						
Ref. No.	**Description**				**RS Part No.**	**MFR's Part No.**
C301	Multilayer	0.1 μF	50 V	+80%−20%		RPE131F104Z50
C302	Ceramic	0.001 μF	50 V	±10%		HE50SJYB102K
C303	Ceramic	0.001 μF	50 V	±10%		HE50SJYB102K
DIODE						
D301	Silicon	S5566B				S5566B
INDUCTORS						
L301	Coil, choke	47 μH				LAL04NA470K
L302	Coil, choke	47 μH				LAL04NA470K
RESISTOR						
R301	Carbon Film	39 ohm	1/4 W	±5%		ERD25PJ390
MISCELLANEOUS						
J301	JACK, Power (PWR)					HEC0779-01-030
J302	JACK, Power (CHG)					HEC0779-01-030
㉜	Plate, Power Jack Shield					GE-87D-7300
㉝	Fiber, Power Jack Shield					GE-87D-7301

MECHANICAL PARTS LIST

Ref.No.	Description	RS Part No.	MFR's Part No.
VR102 ①	Pot., Volume W/Switch 10 kohm (A)		RL126N00B10k (A)-15
VR101 ②	Pot., Squelch 10 kohm (C)		RL126N0010k(C)-15
③	Jack, Antenna		GE-85D-5383
SPK1 ④	Speaker		SP-455H
⑤	Assy PCB, Linear for U.S.A.		GA-87D-7208
⑤	Assy PCB, Linear for CANADA		GA-87B-7208-A
⑥	Assy PCB, Logic		GA-87B-6954
⑦	Assy PCB, Jack Power		GA-87C-7033
⑧	Case, Battery (Black)		GE-82D-3490
⑨	Terminal, Battery		GE-87D-7015
⑩	Contact, KEY Lock Switch		GE-82D-3395
⑪	Assy, Bracket PCB for U.S.A.		GA-87D-7012
⑪	Assy, Bracket PCB for CANADA		GA-88D-7662
⑫	Assy, Front Case (Non Repairable) (Black)		GA-87D-7242
⑬	Assy, Rear Case (Non Repairable) (Black)		GA-87D-7243
⑭	Cover, Battery (Black)		GE-87C-7003
⑮	Clip, Belt (Black)		GE-82D-3369
⑯	Key, Top (Black)		GE-84D-5283
⑰	Knob, Key Lock (Black)		GE-85D-5462
⑱	Knob, Volume/Squelch (Black)		GE-87D-7005
⑳	Antenna, Rubber (Black)		GE-85D-5376
	Pan Head Machine Blk + 2×4		
	Pan Head Machine + 2×5		
	Pan Head Machine Blk + 2×8		
	Bind Blk + 3×5		
	Pan Head TP Tapping Blk + 2×4		
㉑	Stud		GE-87D-7016
㉒	See page 38		
㉓	See page 38		
㉔	See page 38		
㉕	See page 38		
㉖	See page 41		
㉗	See page 44		
㉘	See page 44		
㉙	See page 44		
㉚	See page 44		
㉛	See page 44		
㉜	See page 45		
㉝	See page 45		

DISASSEMBLY DIAGRAM/EXPLODED VIEW

Step 1: Remove 4 screws Ⓐ.
Step 2: Open the front and rear case.

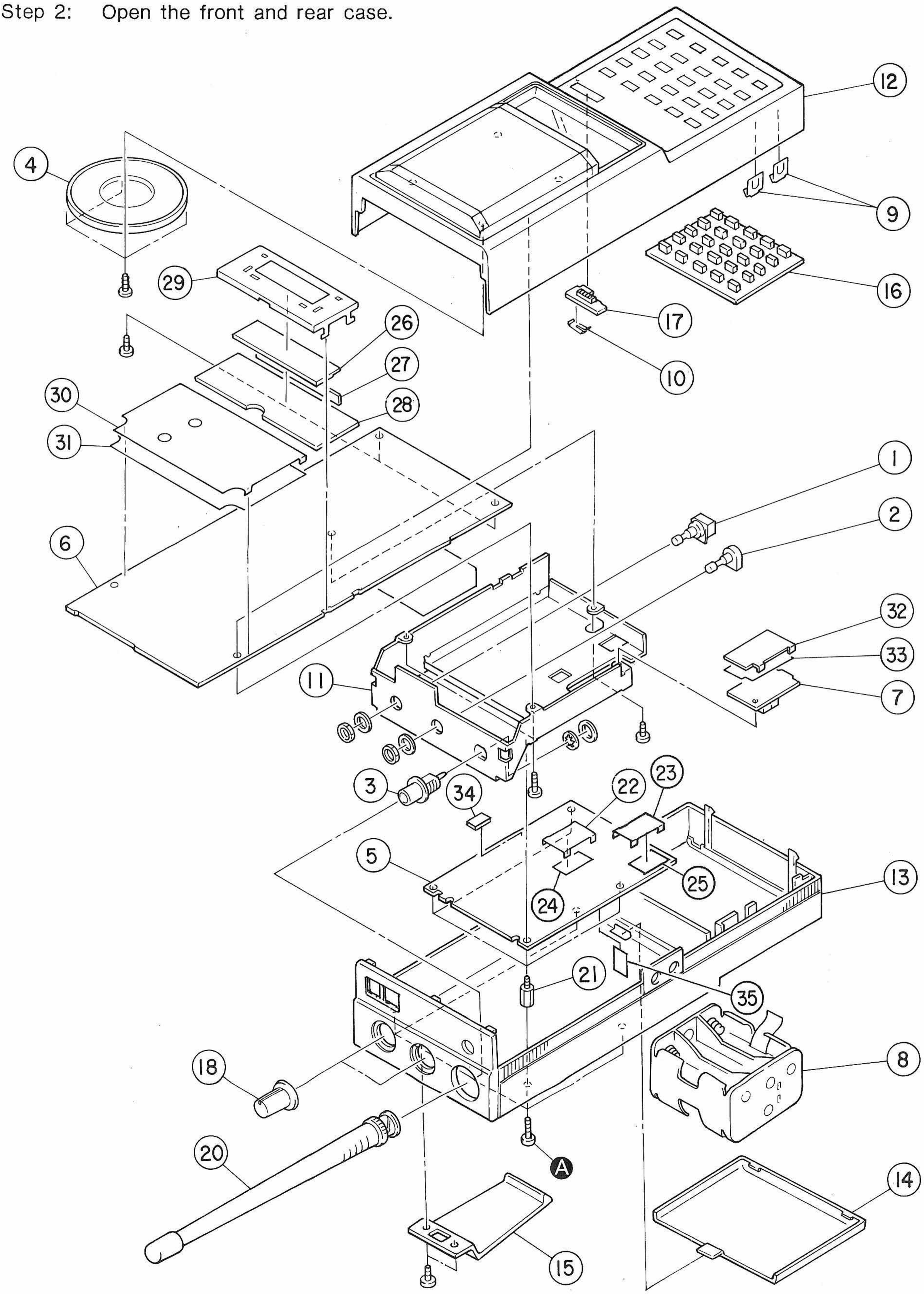

SEMICONDUCTOR LEAD IDENTIFICATION AND IC CIRCUIT DIAGRAM

Integrated Circuit Lead Identification

IC1 GRE-0620A

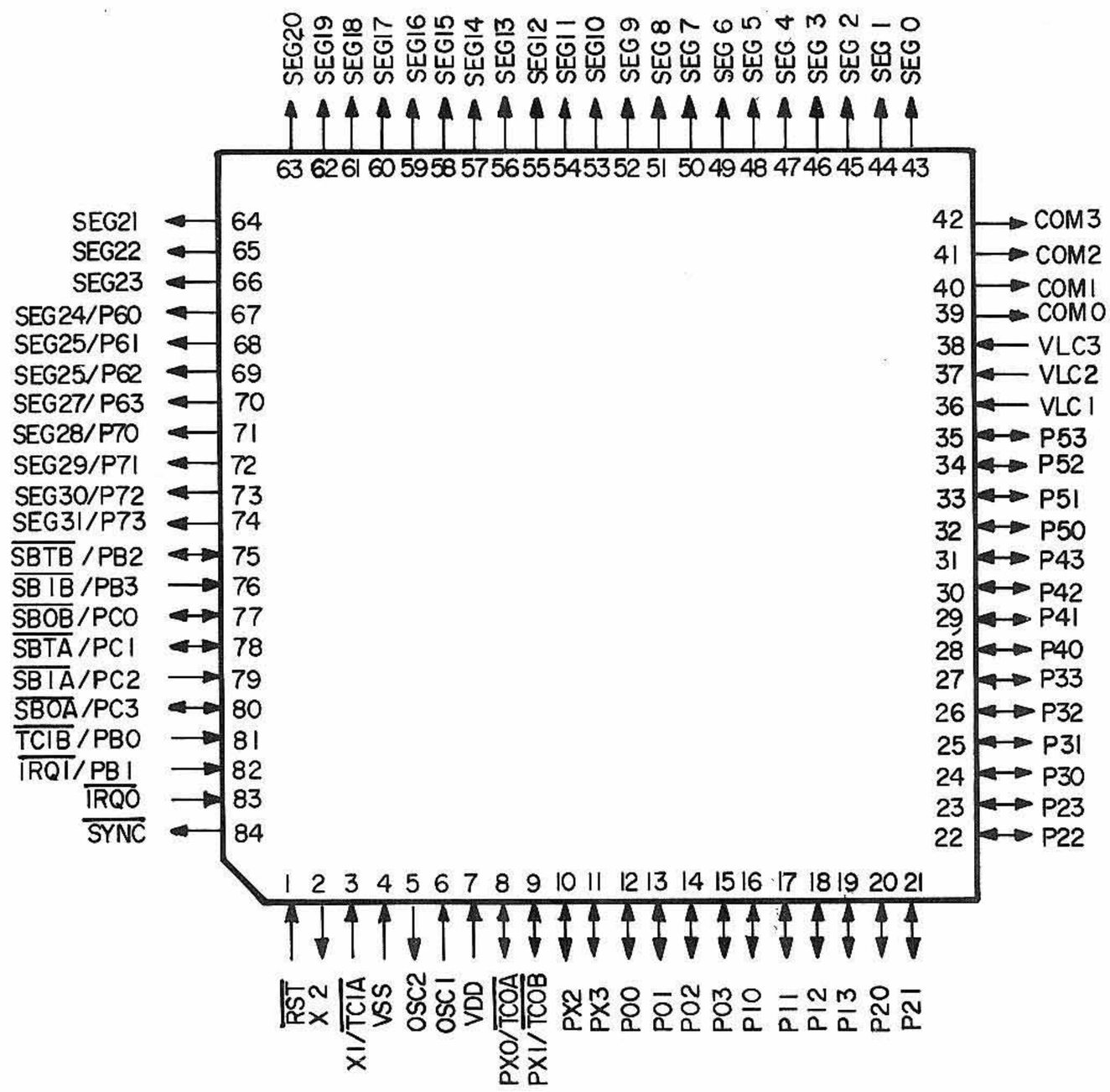

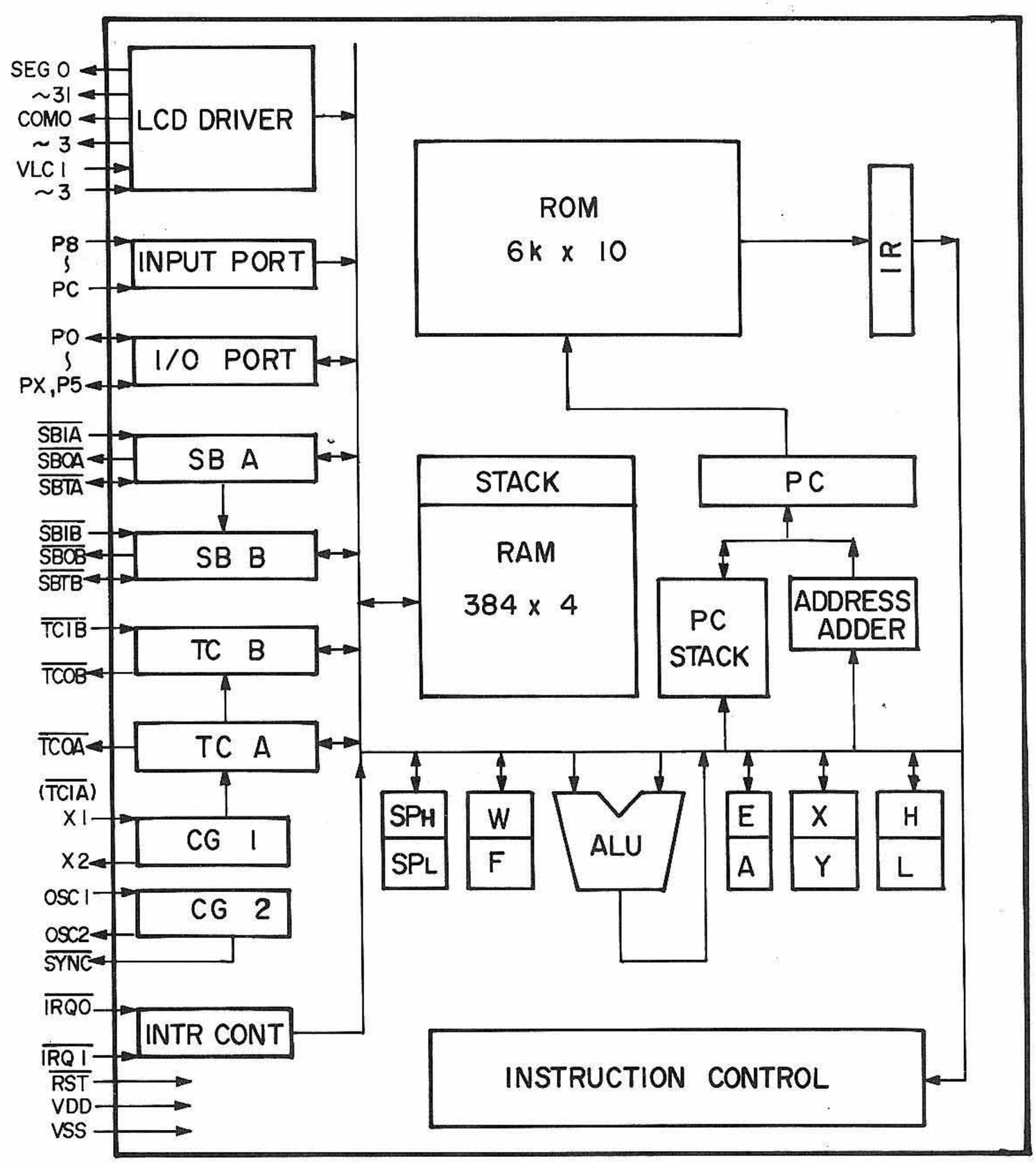

IC2 TC5517CF-20

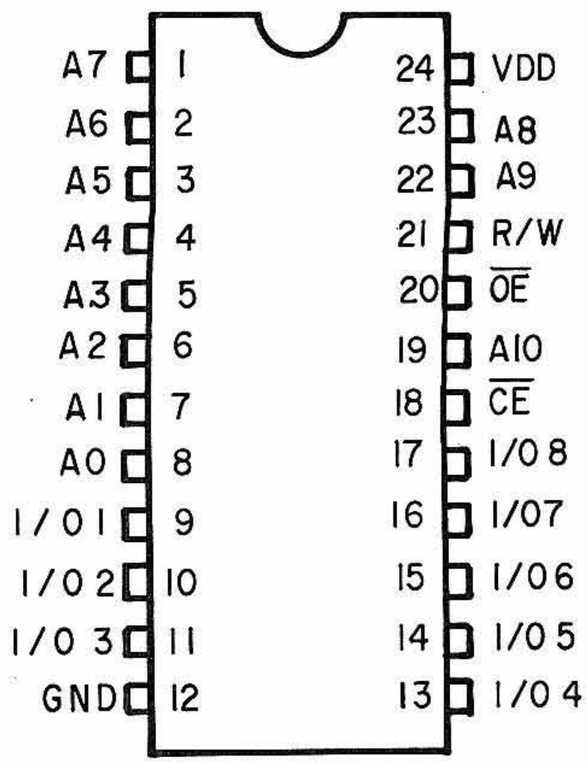

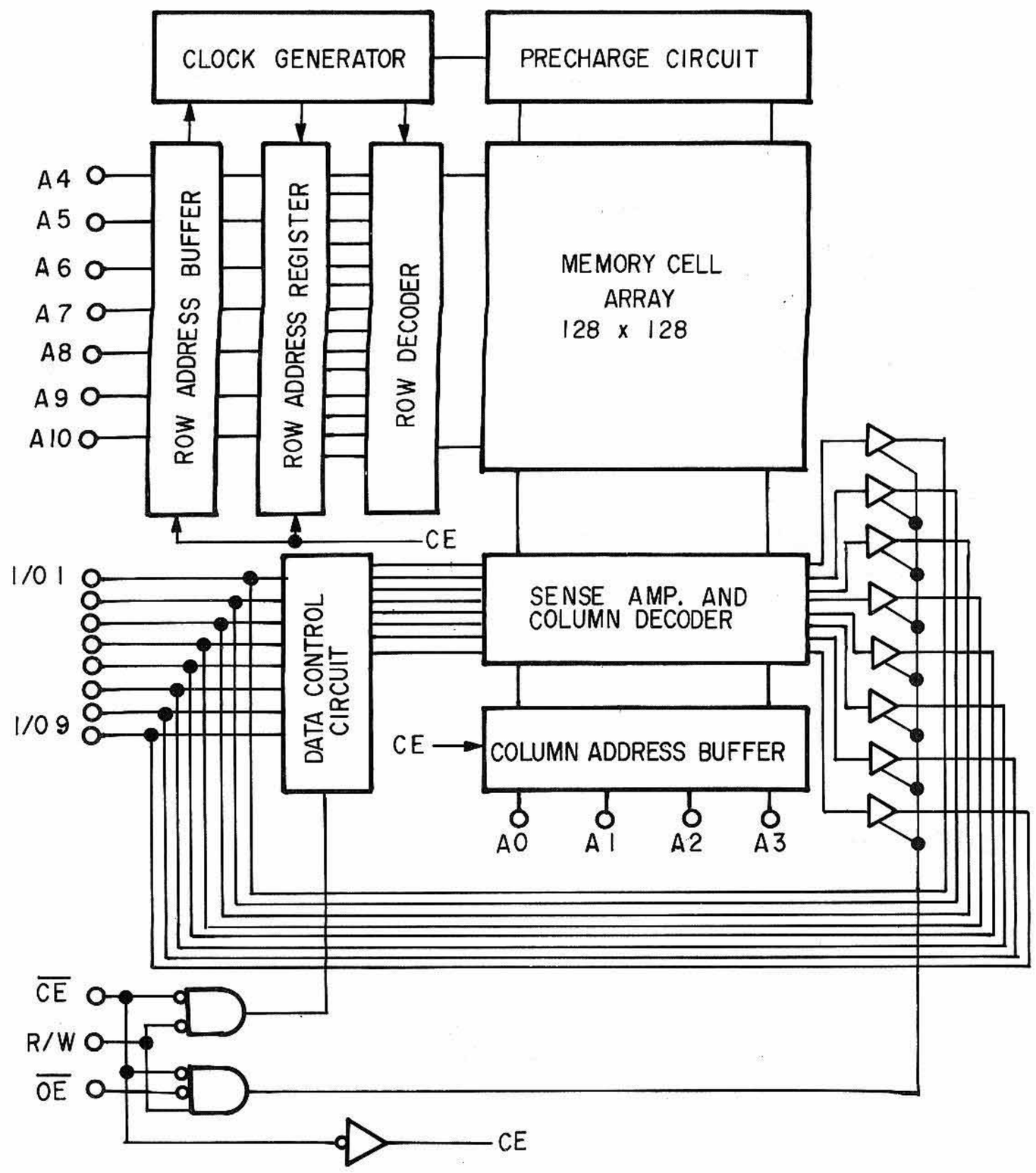

IC3 S-8125OHG

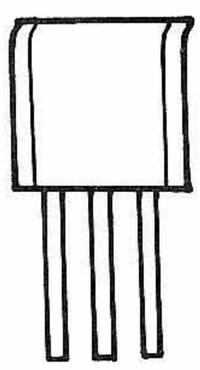

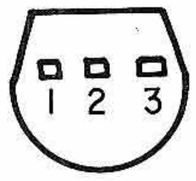

1:GND
2:V IN
3:V OUT

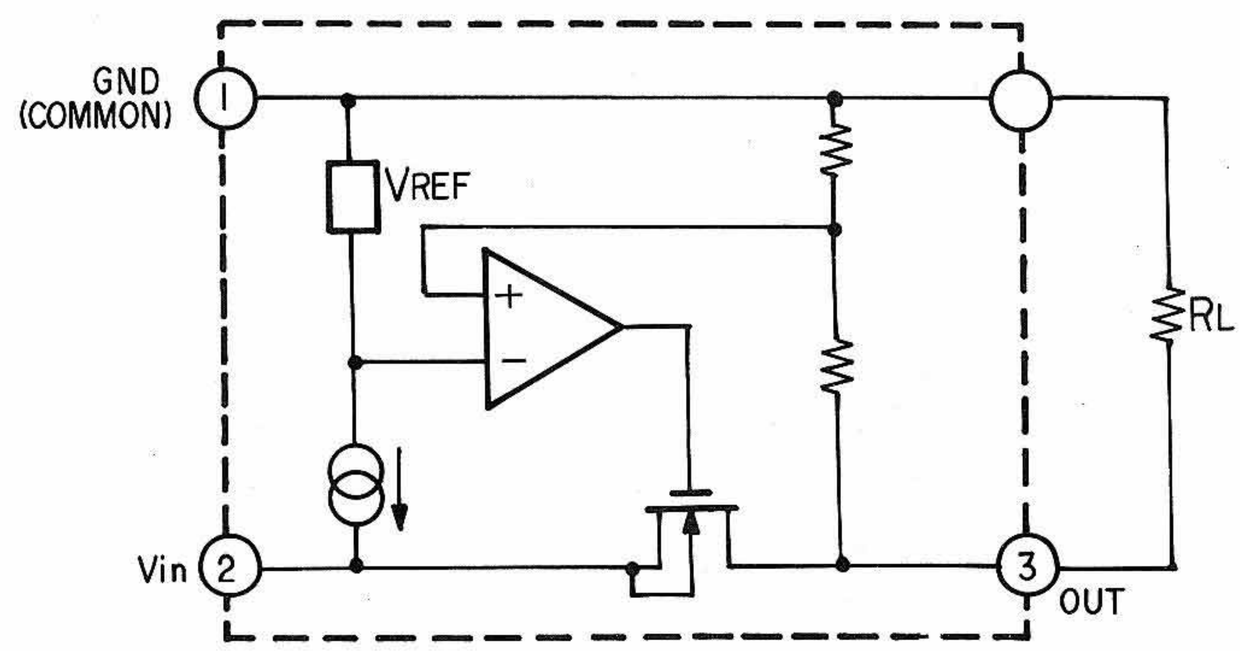

IC4 MN1280S

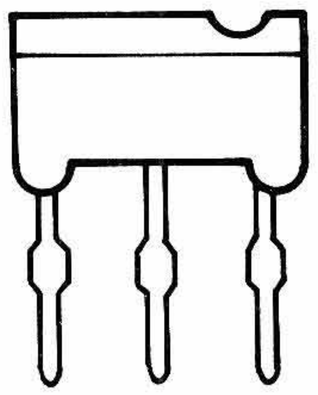

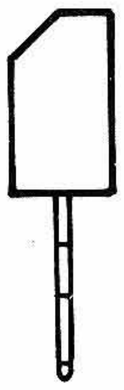

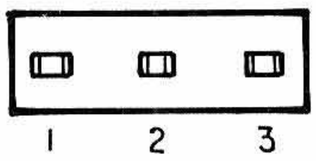

1 : OUTPUT
2 : VDD
3 : Vss

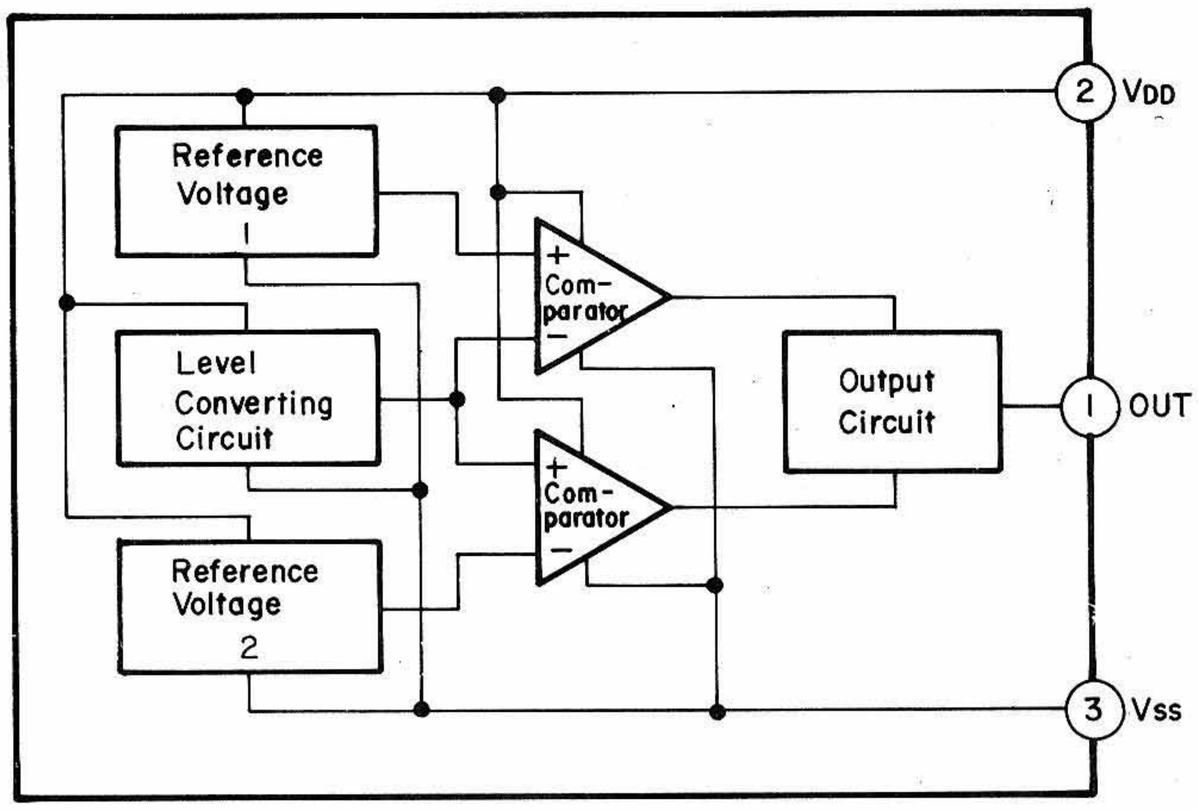

IC5 S-8054HN

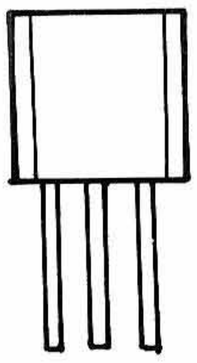

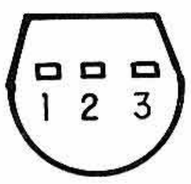

1:OUT
2:VDD
3:VSS

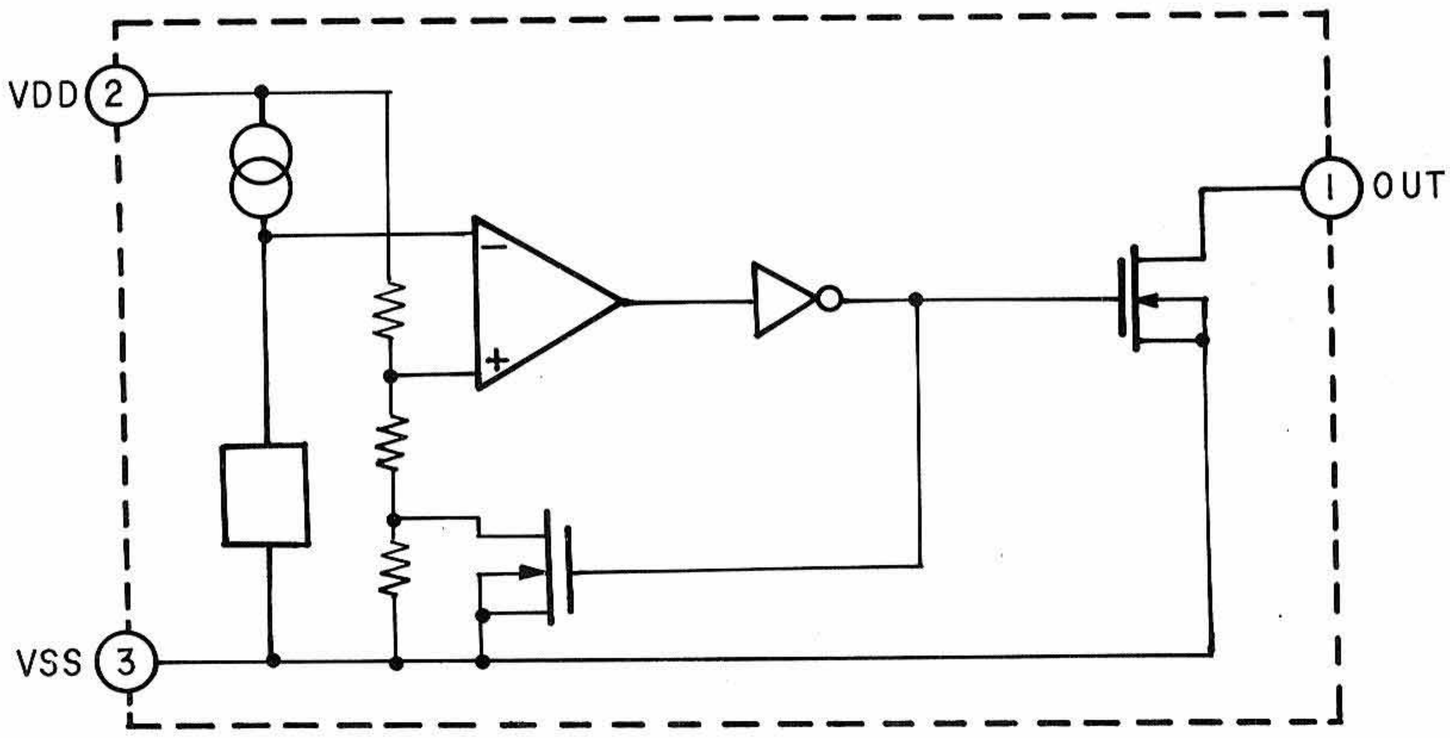

IC6 μPC358G

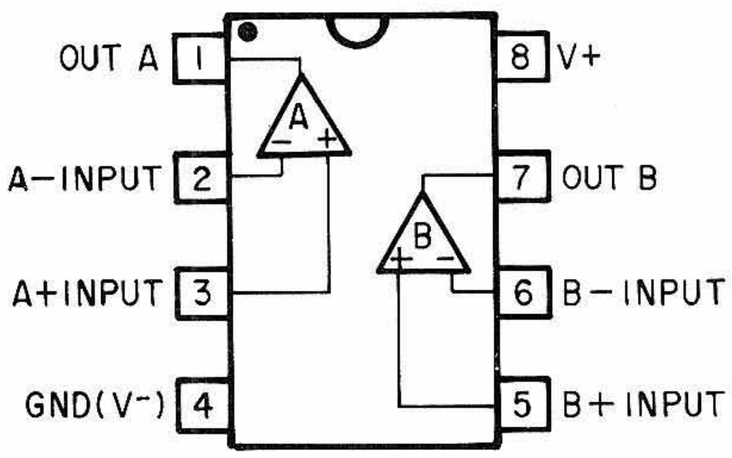

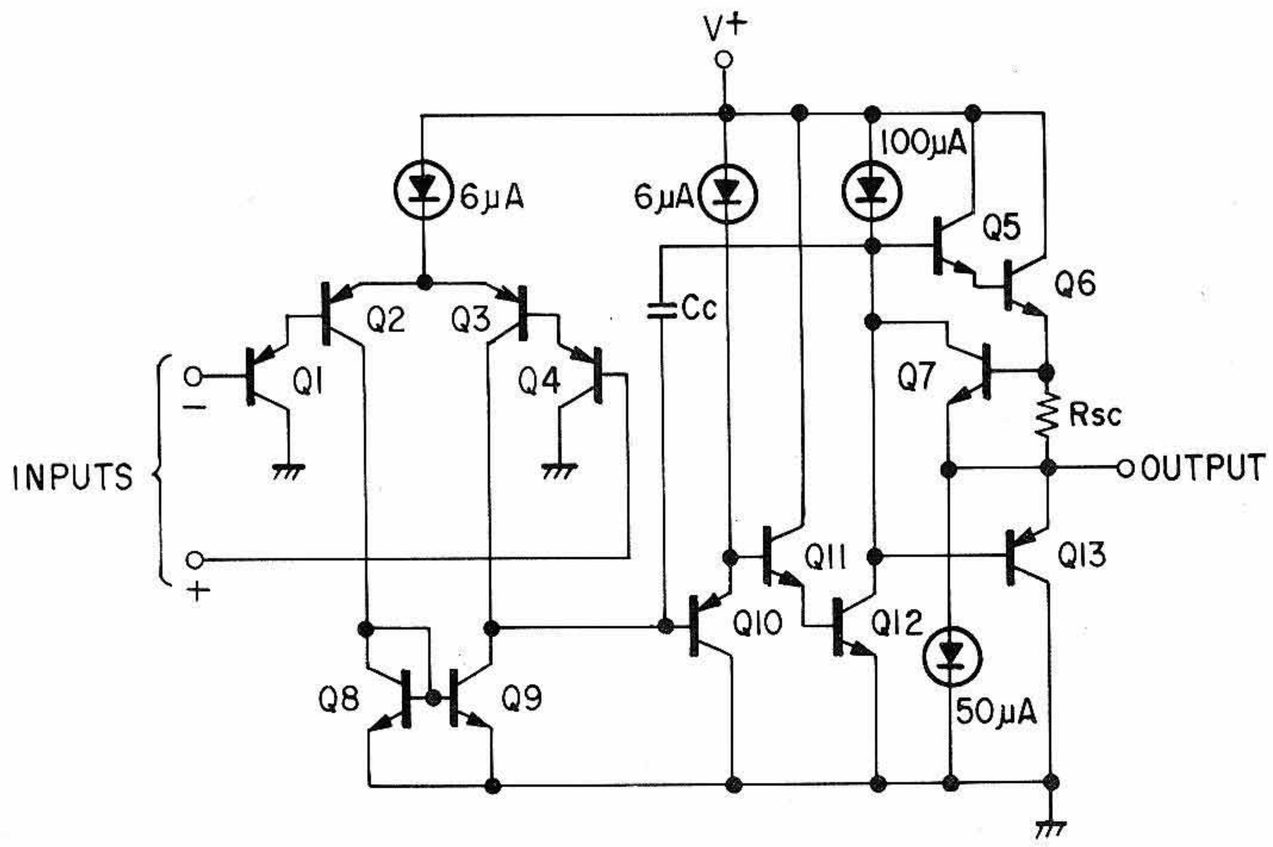

IC7 MB50ILVP-G

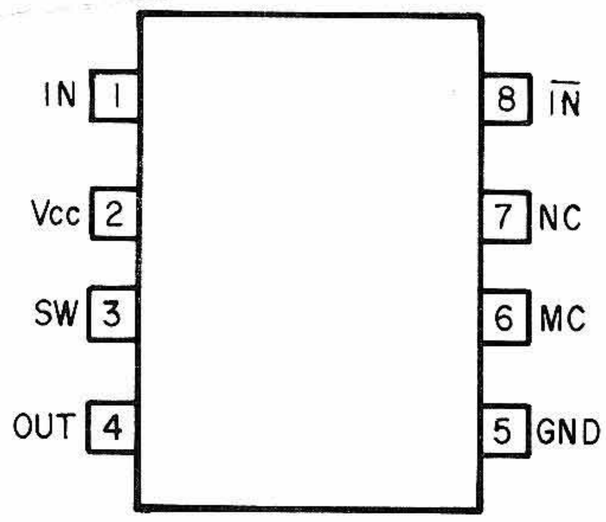

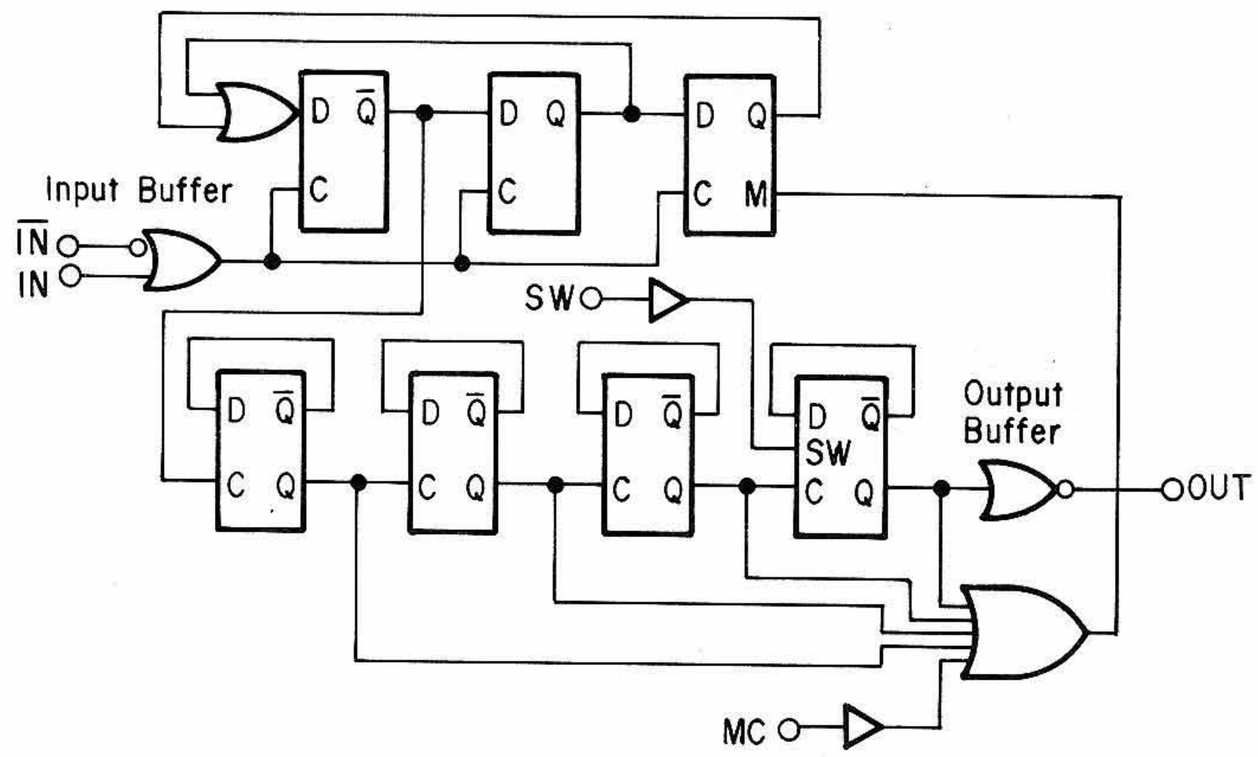

IC8 MB87006APF-G-BND

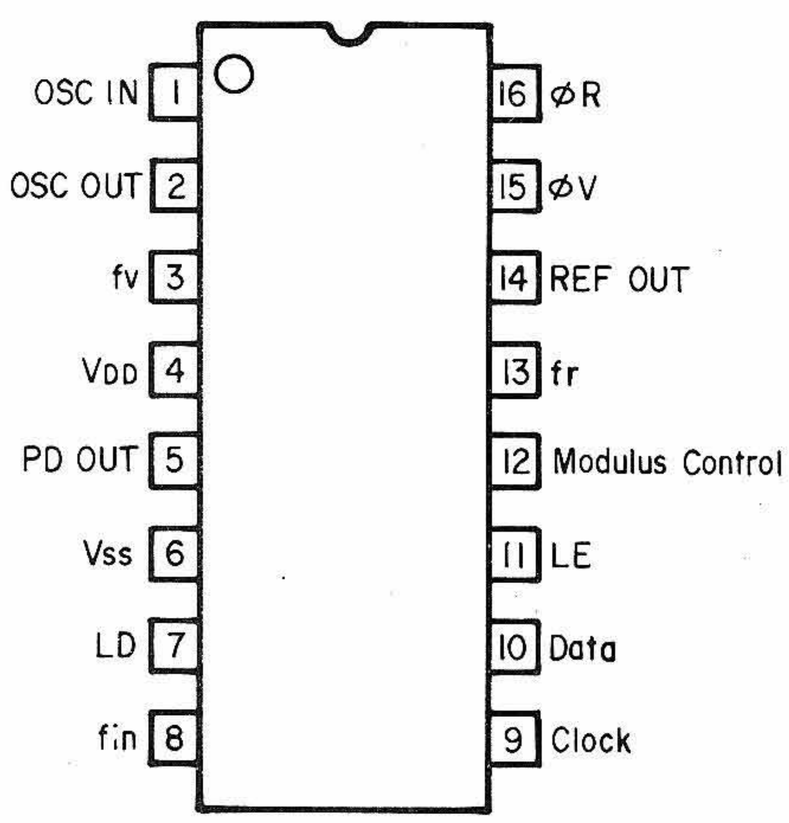

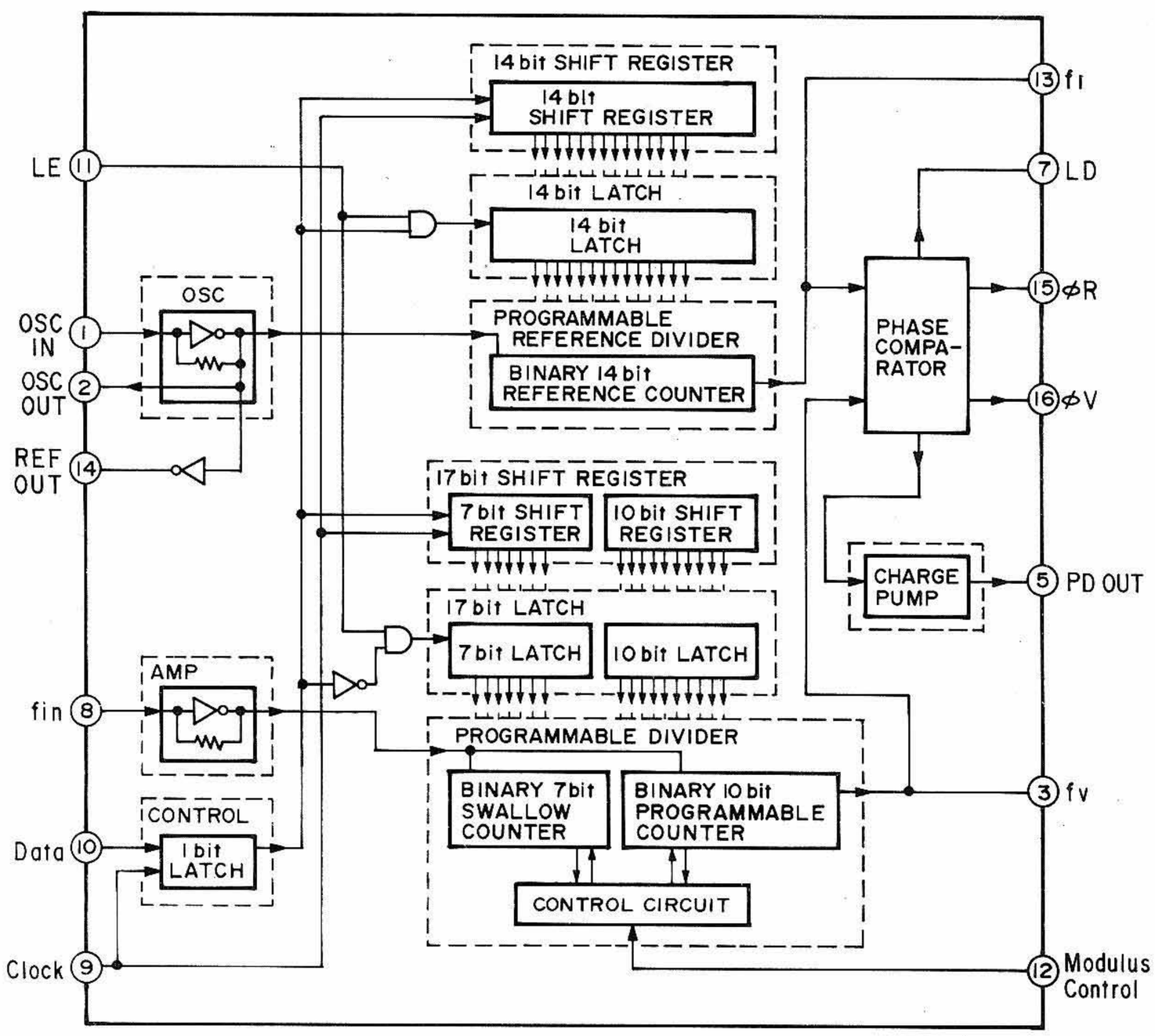

IC9 LM386N-1

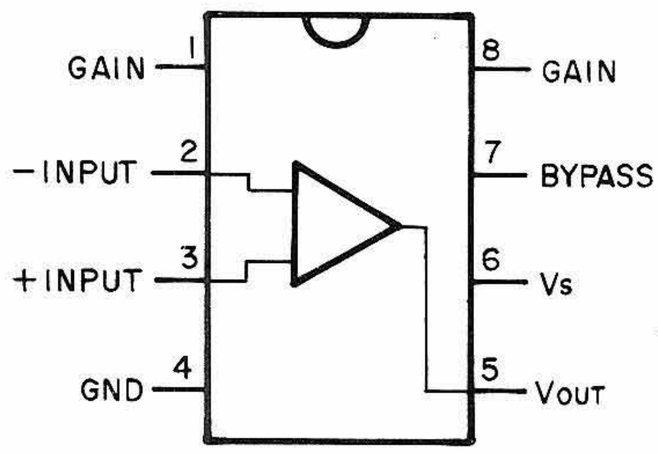

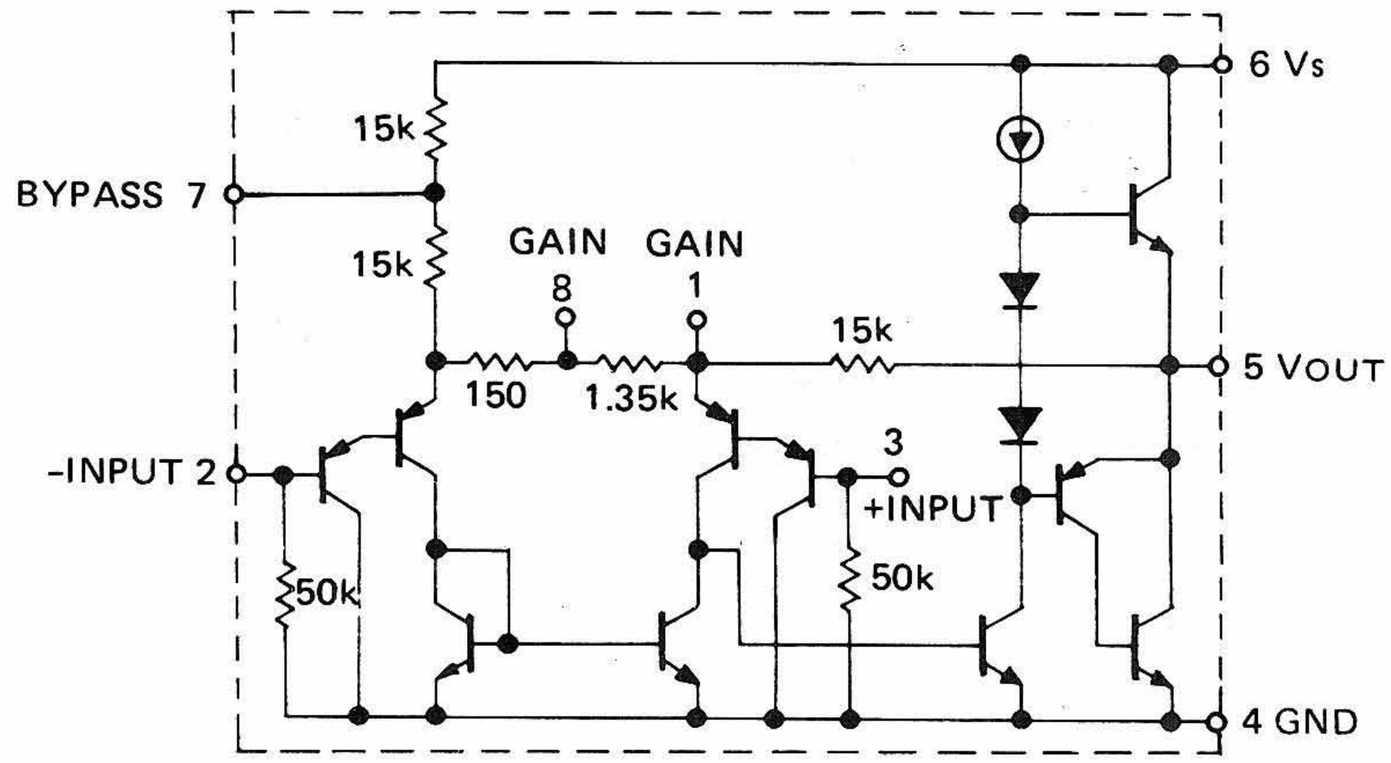

IC101 TK 10420

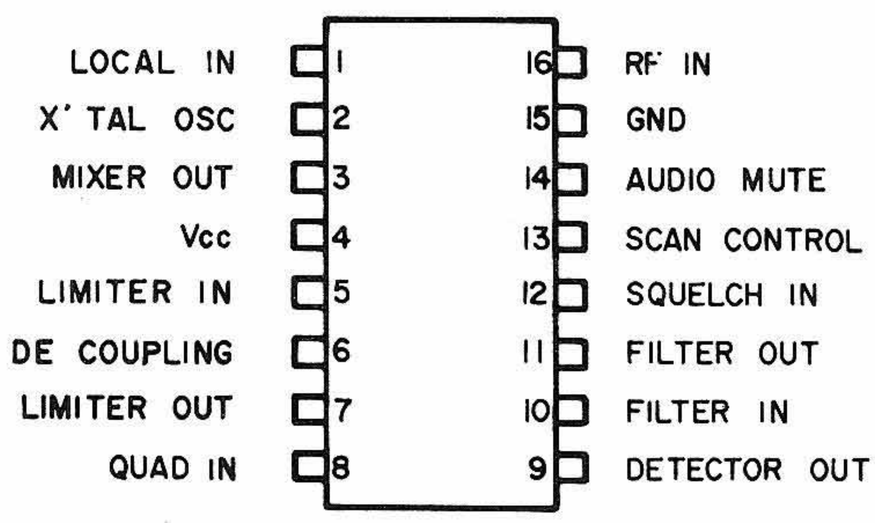

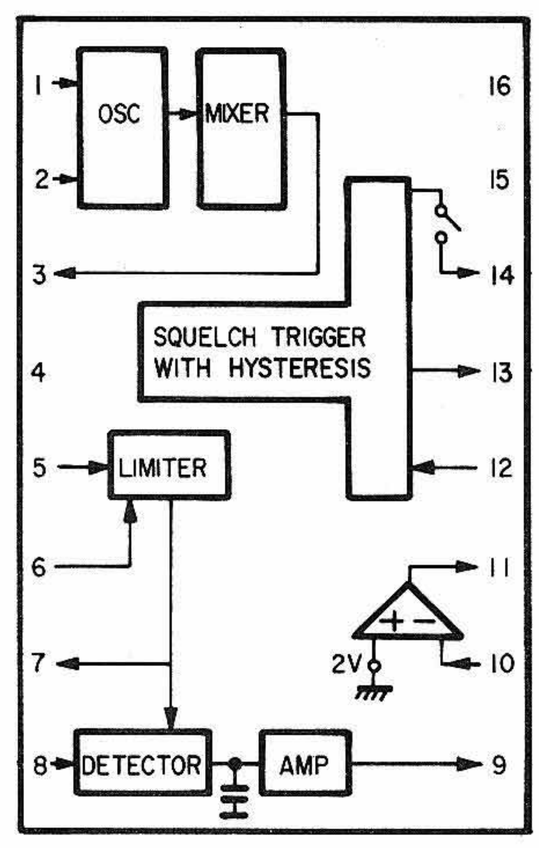

Transistor Lead Identification

(A) 2SC2712 (Y, O, GR)
2SC2714 (O)
2SC2732
2SC2734
2SC3356
RN2402
UN2111

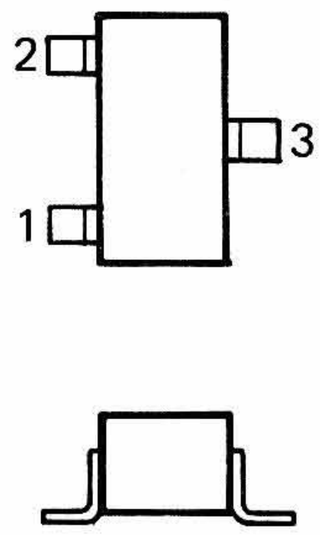

1. Emitter
2. Base
3. Collector

(B) 2SA1150 (Y)
2SC2458 (GR)
RN2202
UN4111

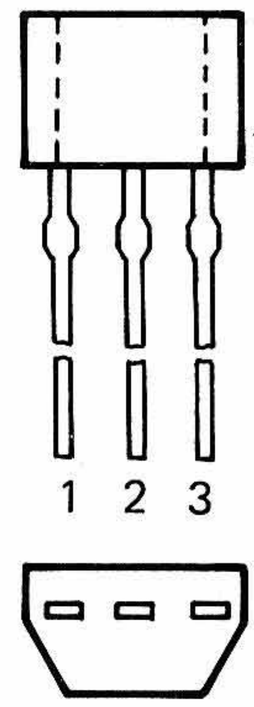

1. Emitter
2. Collector
3. Base

(C) 3SK126 (O)
3SK136 (IV)

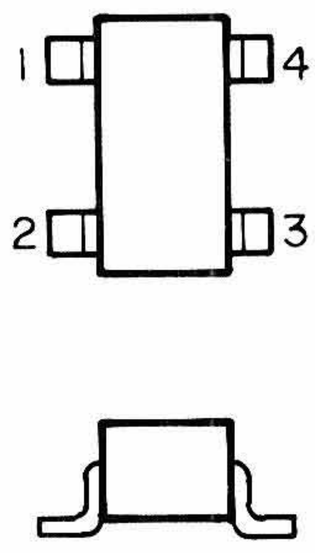

1. Gate 1
2. Gate 2
3. Drain
4. Source

(D) 2SK208

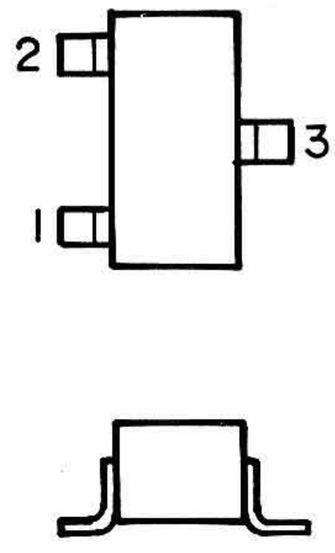

1. Drain
2. Source
3. Gate

(E) 2SK118 (O or R)

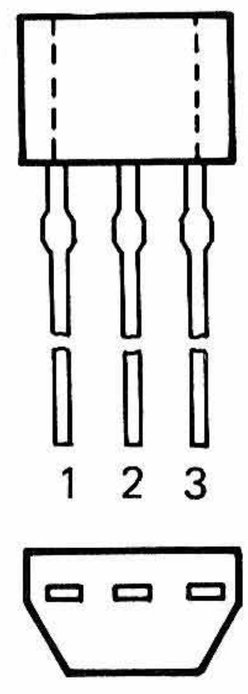

1. Source
2. Gate
3. Drain

Diode Identification and Lead Polarity

A) 1SS168U2

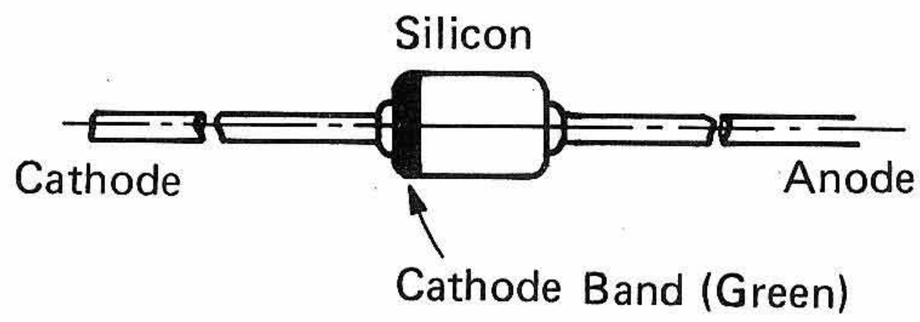

B) 1S2076A

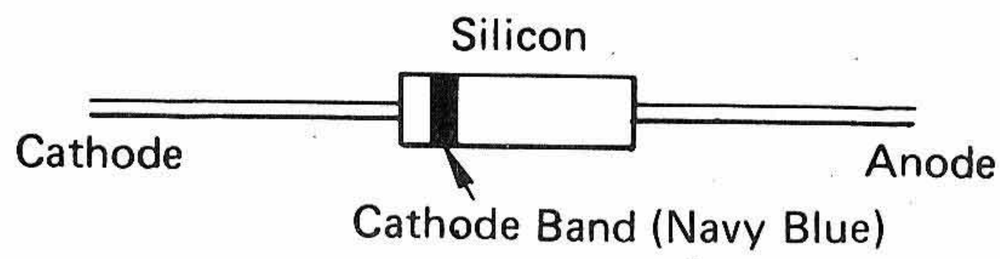

C) HZ6A1L, HZ12B2L
HZ16-3L

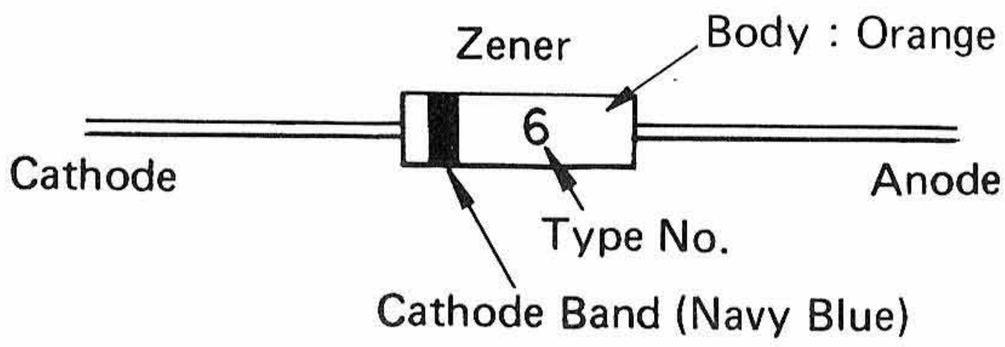

D) BB609A

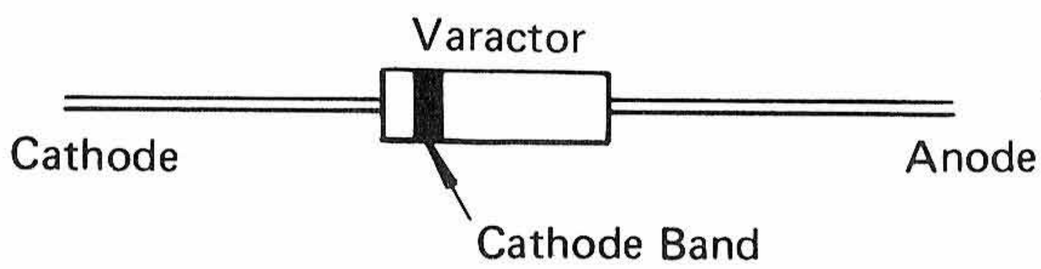

E) 1SV136AU2

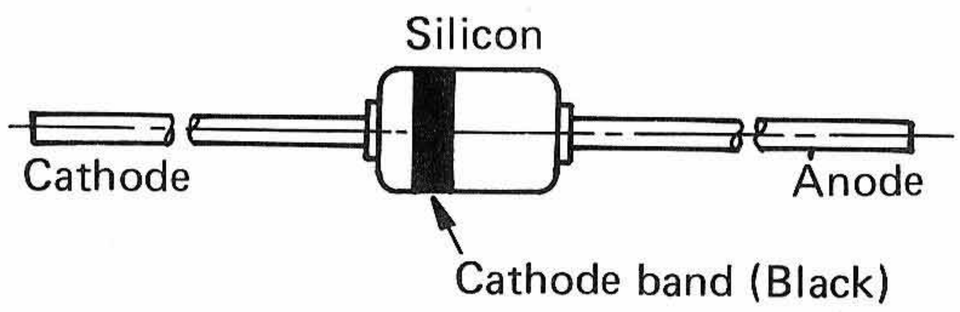

F) 1SV146U2

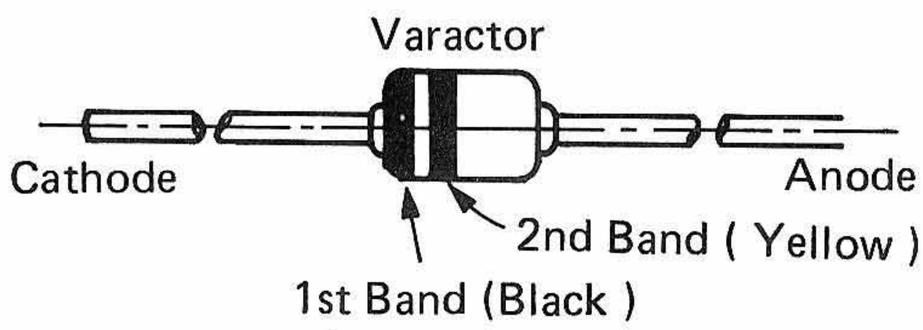

G) 1S2090

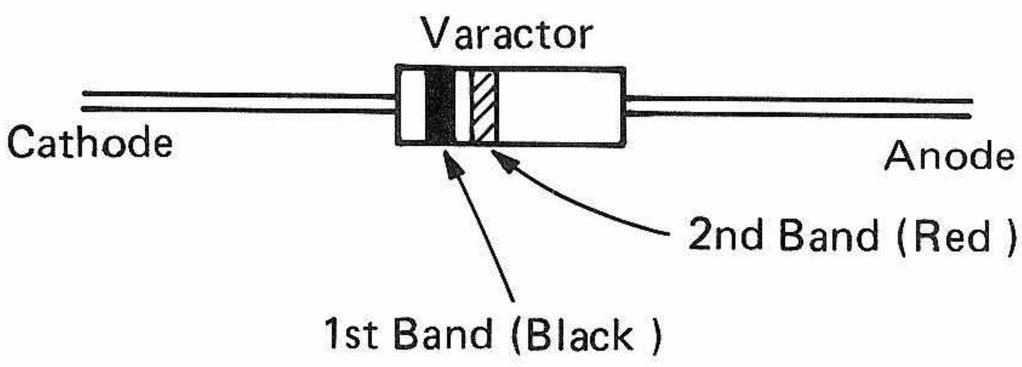

H) OA90R

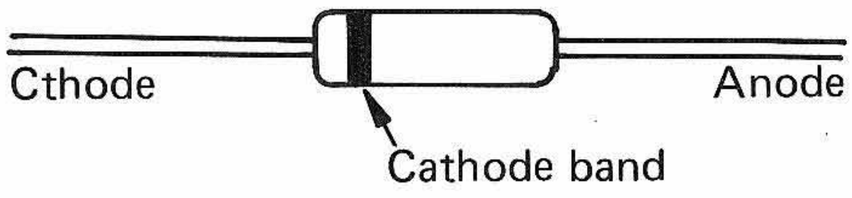

I) IK261

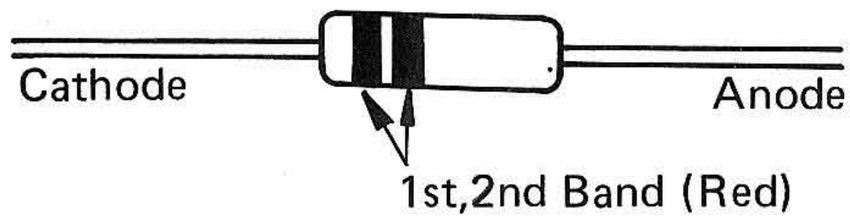

J) S5566B

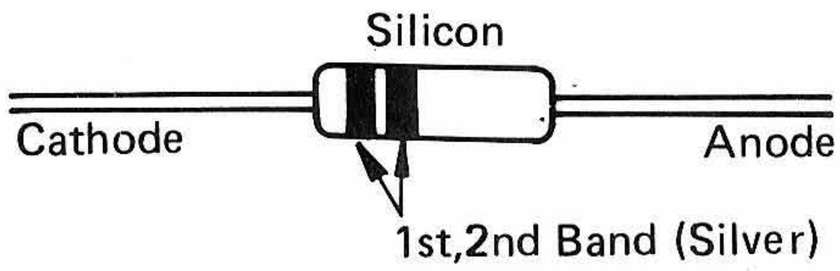

K) HSM2692

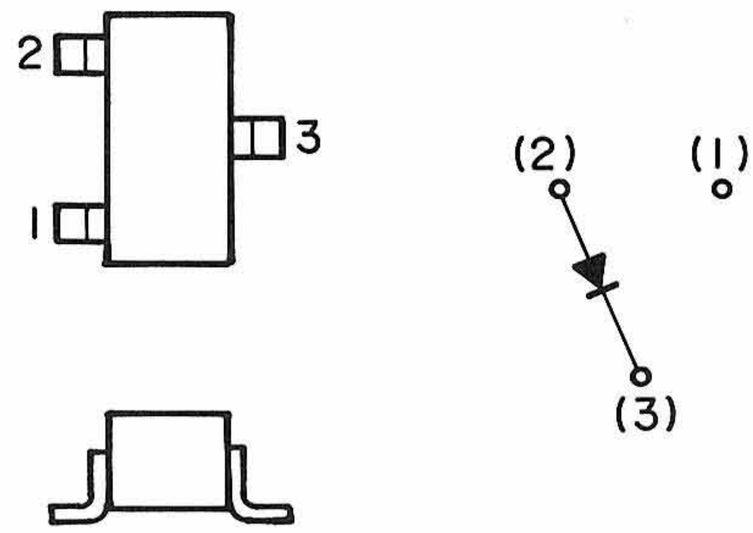

1:NC
2:Anode
3:Cathode

L) HSM2693
DAN202K

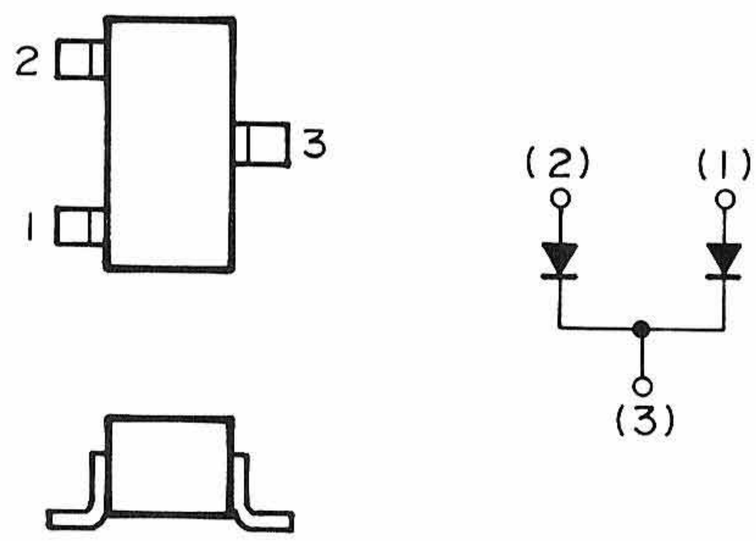

1:Anode
2:Anode
3:Common(Cathode)

M) DAP202K

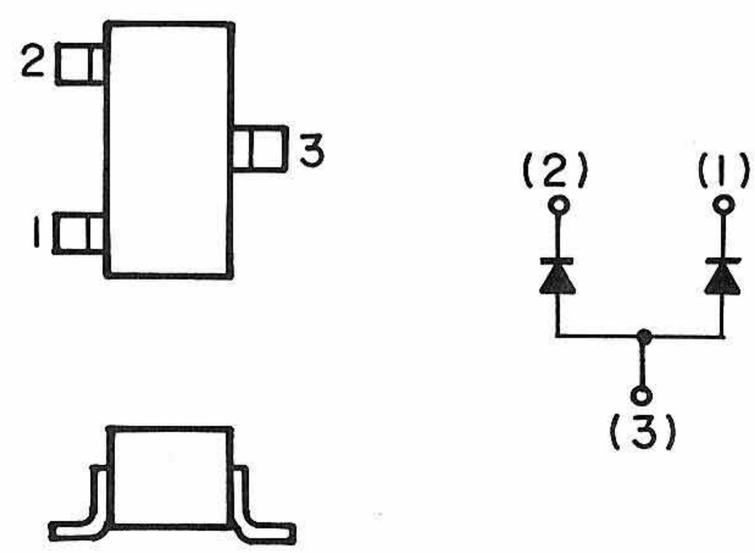

1:Cathode
2:Cathode
3:Common(Anode)

N) IMN10

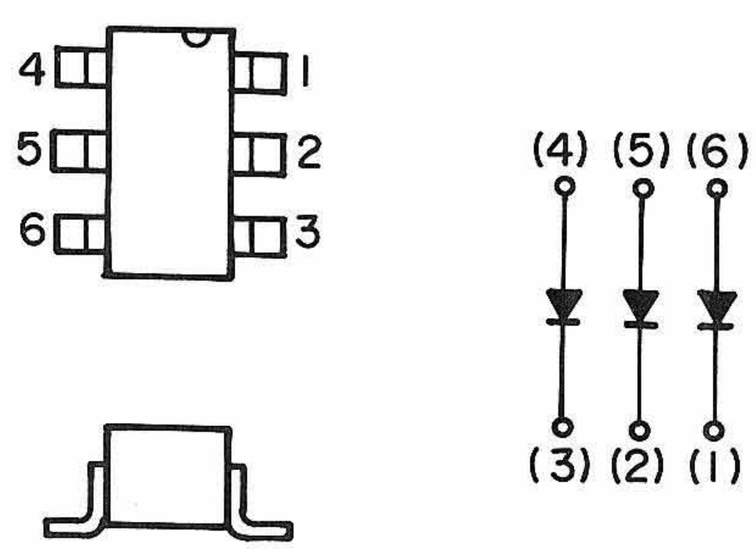

1:Cathode
2:Cathode
3:Cathode
4:Anode
5:Anode
6:Anode

MICROPROCESSOR (IC1) PORT FORMAT

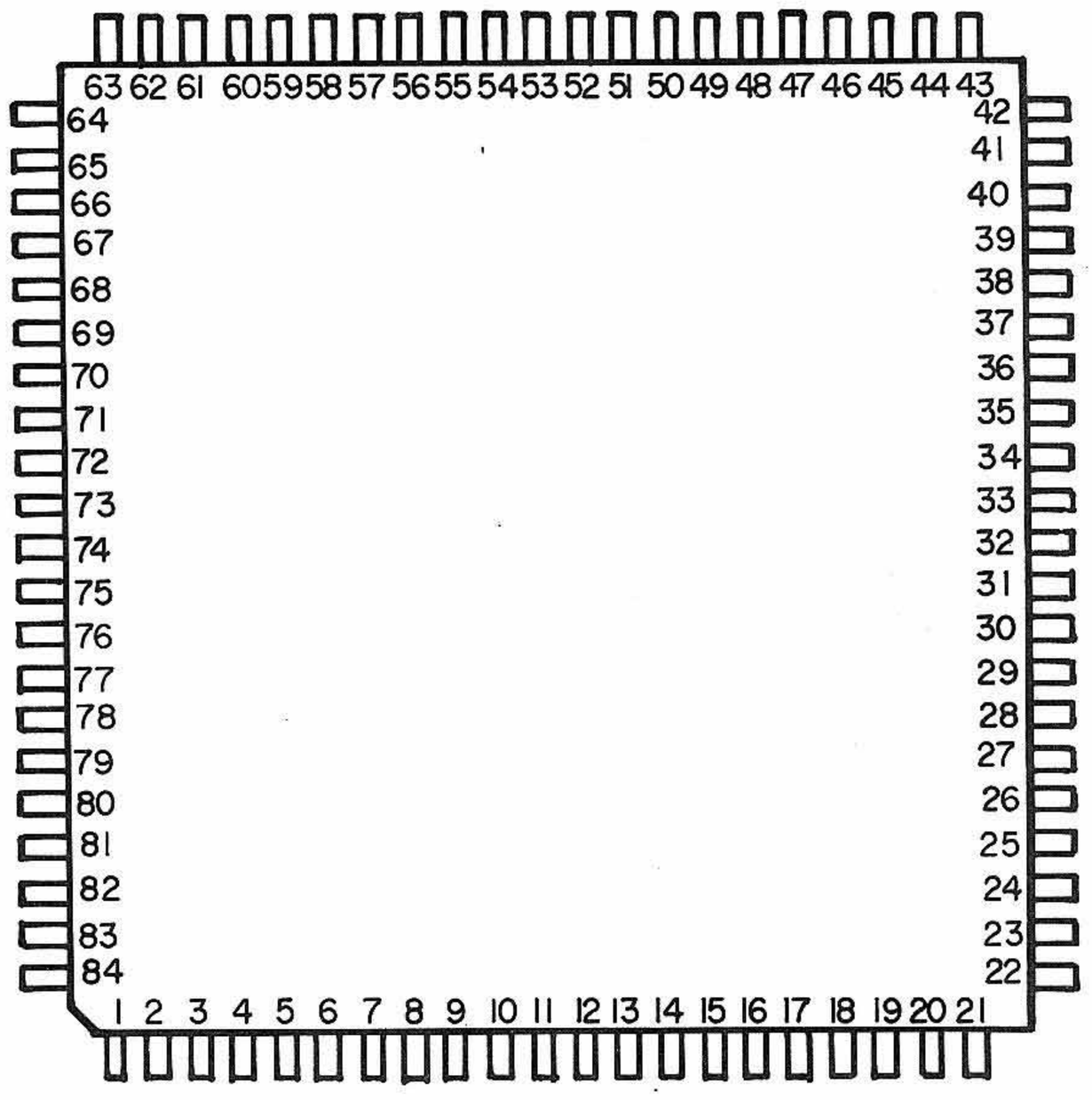

Pin No.		Pin No.	
1	Initialize signal input	43	LCD segment driver output
2	NC	44	LCD segment driver output
3	+B	45	LCD segment driver output
4	Vss	46	LCD segment driver output
5	Resonator connection terminal	47	LCD segment driver output
6	Resonator connection terminal	48	LCD segment driver output
7	V_{DD}	49	LCD segment driver output
8	NC	50	LCD segment driver output
9	Peep output	51	LCD segment driver output
10	BAND 6 output	52	LCD segment driver output
11	BAND 5 output	53	LCD segment driver output
12	BAND 4 output	54	LCD segment driver output
13	BAND 3 output	55	LCD segment driver output
14	BAND 2 or BAND 1 output	56	LCD segment driver output
15	Prescaler switch	57	LCD segment driver output
16	Squelch input	58	LCD segment driver output
17	Zeromatic input	59	LCD segment driver output
18	Memory R/$\overline{W}$ output	60	LCD segment driver output
19	Memory $\overline{CE}$ output	61	LCD segment driver output
20	Memory I/O 1	62	LCD segment driver output
21	Memory I/O 2	63	LCD segment driver output
22	Memory I/O 3	64	LCD segment driver output
23	Memory I/O 4	65	LCD segment driver output
24	Memory address A0	66	LCD segment driver output
25	Memory address A1	67	LCD segment driver output
26	Memory address A2	68	NC
27	Memory address A3	69	NC
28	Memory address A4	70	NC
29	Memory address A5	71	LCD bias control
30	Memory address A6	72	PLL latch output
31	Memory address A7	73	Mute output
32	Memory address A8	74	Power control
33	Memory address A9	75	Key input
34	Memory address A10	76	Key input
35	Memory $\overline{OE}$ output	77	Band switch
36	LCD drive power supply	78	Serial clock output
37	LCD drive power supply	79	Low battery input
38	LCD drive power supply	80	Serial data output
39	LCD common driver output	81	Key input
40	LCD common driver output	82	HOLD input
41	LCD common driver output	83	+B
42	LCD common driver output	84	Timing output

APPENDIX
VHF-MID Band Alignment for 20-9135

Circuit Revision

1. The following parts should be changed as shown below:

Ref. No.	Lo band	Mid band
C103	0.001 μF	33pF
C107	0.001 μF	33pF
C191	47pF	3pF
C192	33pF	27pF
C193	33pF	15pF
C194	0.001 μF	39pF
D119	BB609A	Not used
L101	4LNC-092	4LNC-122
T101	7SSR-278	7SSR-287
T102	7SSR-278	7SSO-281

2. Add D9 and D12, and remove D11.

VCO Alignment

Step 1: Connect a DC SSVM to TP103 and ground.
Step 2: Program CH1, 2 and 3 as follows:
CH1 (68 MHz), CH2 (78 MHz), CH3 (88 MHz)
Step 3: Select channel 3 (88 MHz) and adjust TC103 for 12.0 V on the DC SSVM.
Step 4: Select channel 1 (68 MHz) and adjust T107 for 1.5 V on the DC SSVM.
Step 5: Repeat steps 3 and 4 until no improvement is observed.
The DC SSVM should show as below.

68 MHz	Voltage of	TP103	1.4-1.6 V
78 MHz	Voltage of	TP103	6.0-7.0 V
88 MHz	Voltage of	TP103	11.5-12.5 V

RF Amp Alignment

Step 1: Connect instruments as shown below:

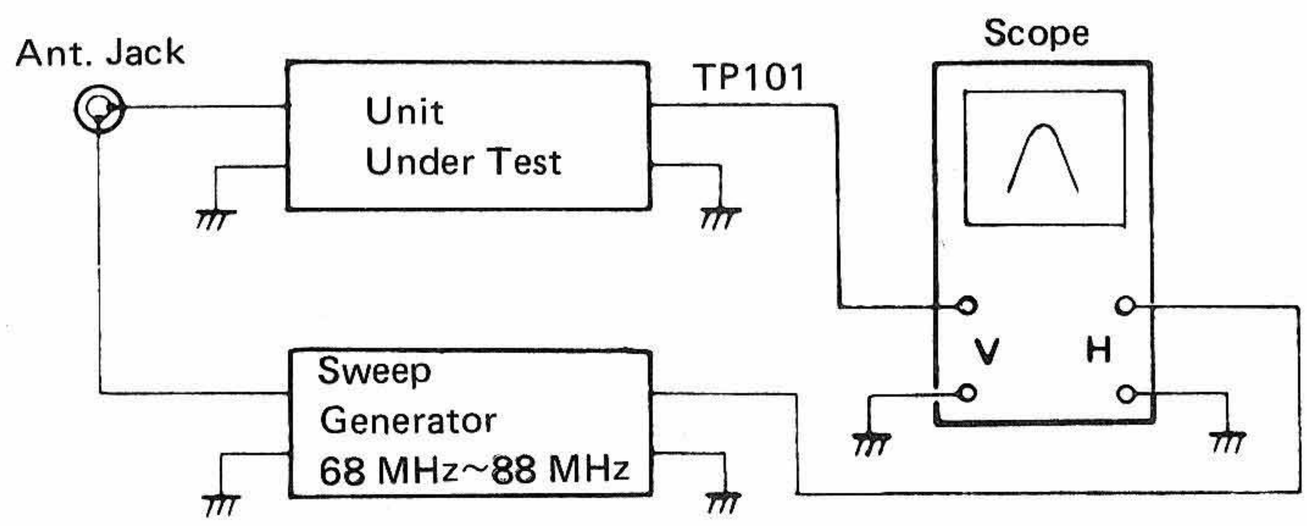

Step 2: Program 68 MHz (CH1), 78 MHz (CH2), 88 MHz (CH3).
Step 3: Select Channel 1 (68 MHz) and adjust T101 and T102 for maximum RF waveform.
Step 4: Check the Channels 1~3 one by one for maximum RF waveform.
Slight deviation as shown below is acceptable.

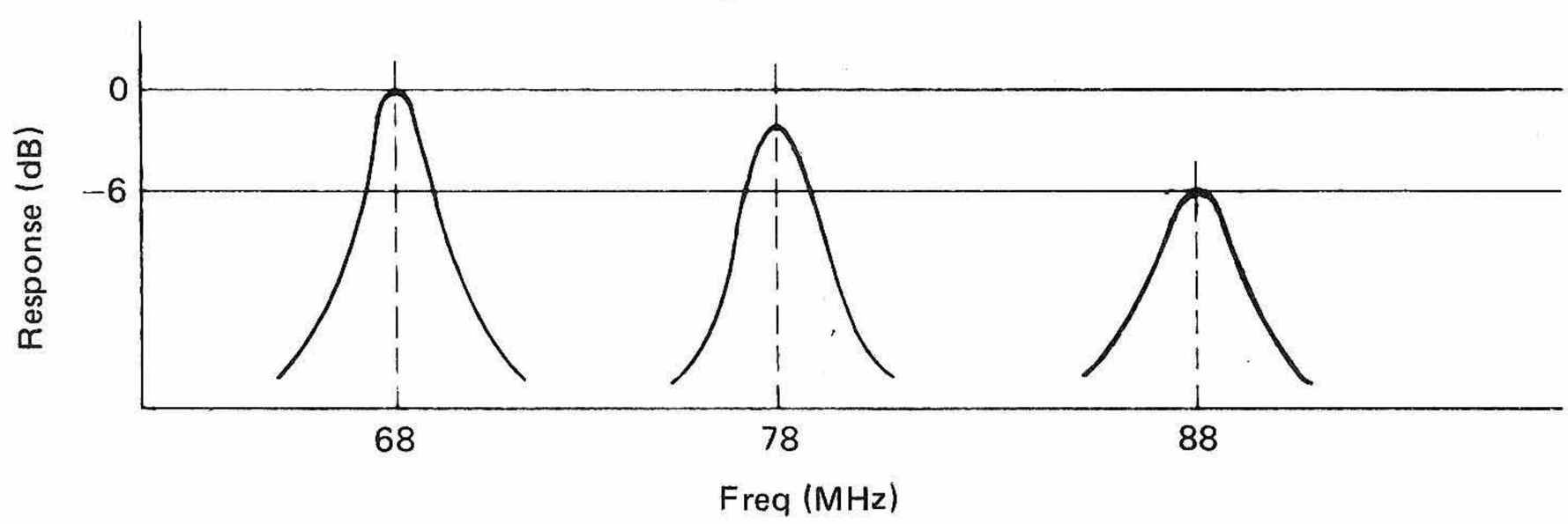

SCHEMATIC DIAGRAM (Linear Sectio

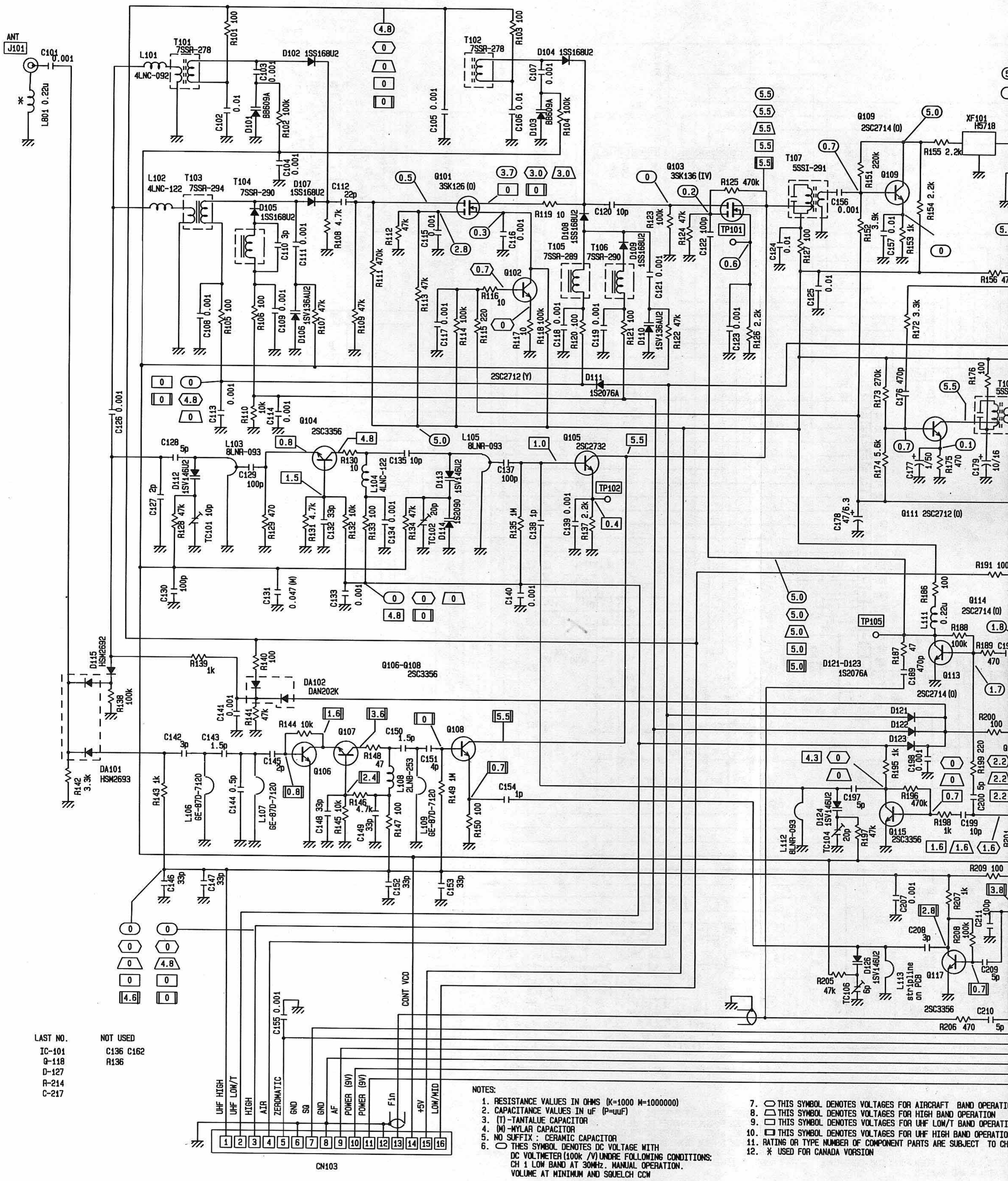

LAST NO.	NOT USED
IC-101	C136 C162
Q-118	R136
D-127	
R-214	
C-217	

NOTES:

1. RESISTANCE VALUES IN OHMS (K=1000 M=1000000)
2. CAPACITANCE VALUES IN uF (P=uuF)
3. (T)-TANTALUE CAPACITOR
4. (M)-MYLAR CAPACITOR
5. NO SUFFIX : CERAMIC CAPACITOR
6. ⬭ THES SYMBOL DENOTES DC VOLTAGE WITH DC VOLTMETER(100k /V) UNDRE FOLLOWING CONDITIONS: CH 1 LOW BAND AT 30MHz. MANUAL OPERATION. VOLUME AT MINIMUM AND SQUELCH CCW
7. ⬭ THIS SYMBOL DENOTES VOLTAGES FOR AIRCRAFT BAND OPERATIO
8. ⬭ THIS SYMBOL DENOTES VOLTAGES FOR HIGH BAND OPERATION
9. ⬭ THIS SYMBOL DENOTES VOLTAGES FOR UHF LOW/T BAND OPERATI
10. ⬭ THIS SYMBOL DENOTES VOLTAGES FOR UHF HIGH BAND OPERATIO
11. RATING OR TYPE NUMBER OF COMPONENT PARTS ARE SUBJECT TO CH
12. ✱ USED FOR CANADA VORSION

MATIC DIAGRAM (Linear Section)

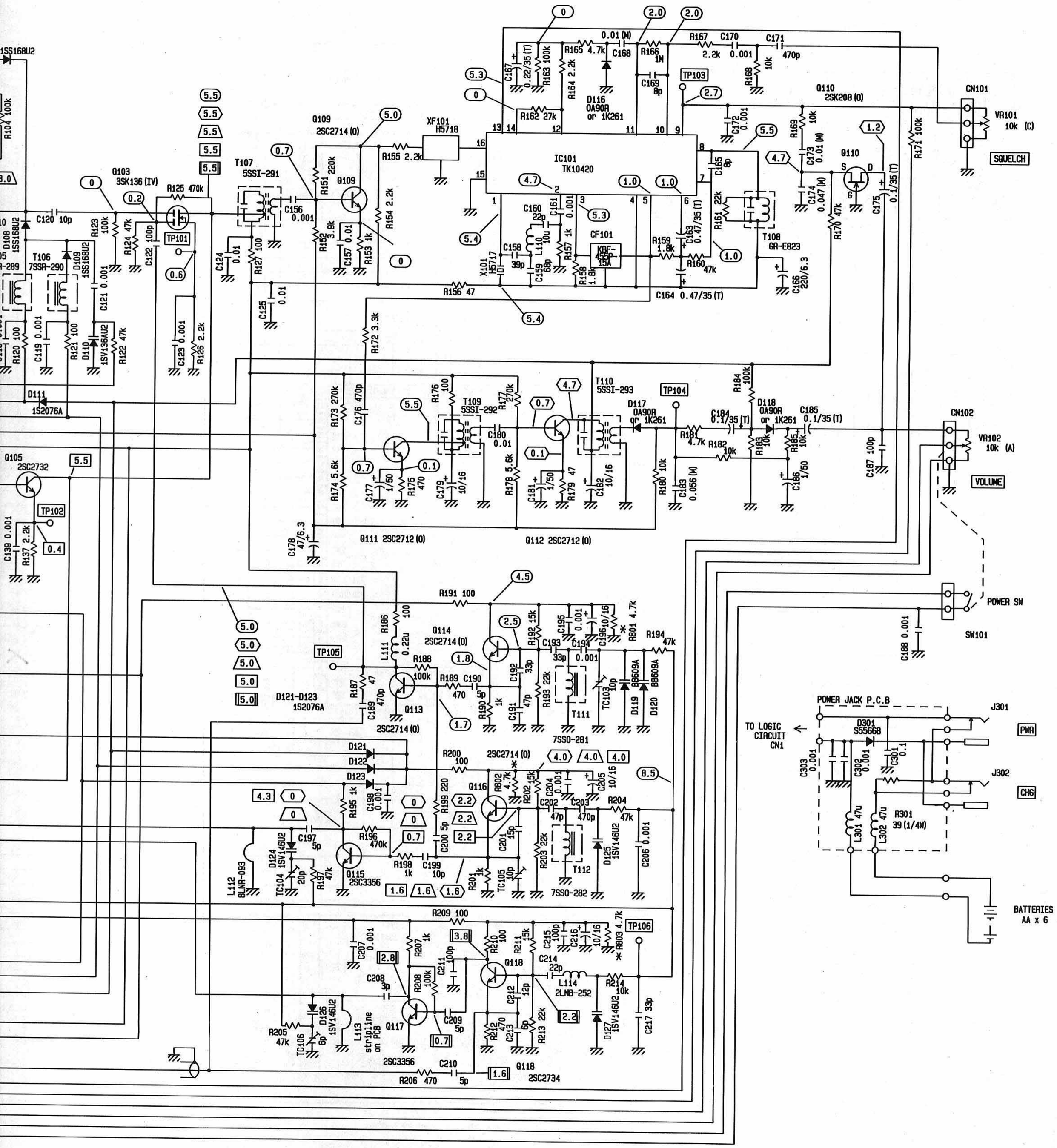

S IN OHMS (K=1000 M=1000000)
ES IN uF (P=uuF)
ACITOR
TOR
MIC CAPACITOR
DENOTES DC VOLTAGE WITH
(100k /V) UNDRE FOLLOWING CONDITIONS:
D AT 30MHz. MANUAL OPERATION.
NIMUM AND SQUELCH CCW

7. THIS SYMBOL DENOTES VOLTAGES FOR AIRCRAFT BAND OPERATION
8. THIS SYMBOL DENOTES VOLTAGES FOR HIGH BAND OPERATION
9. THIS SYMBOL DENOTES VOLTAGES FOR UHF LOW/T BAND OPERATION
10. THIS SYMBOL DENOTES VOLTAGES FOR UHF HIGH BAND OPERATION
11. RATING OR TYPE NUMBER OF COMPONENT PARTS ARE SUBJECT TO CHANGE
12. * USED FOR CANADA VORSION

COPYRIGHT 1988

SCHEMATIC DIAGRAM (Logic Section)

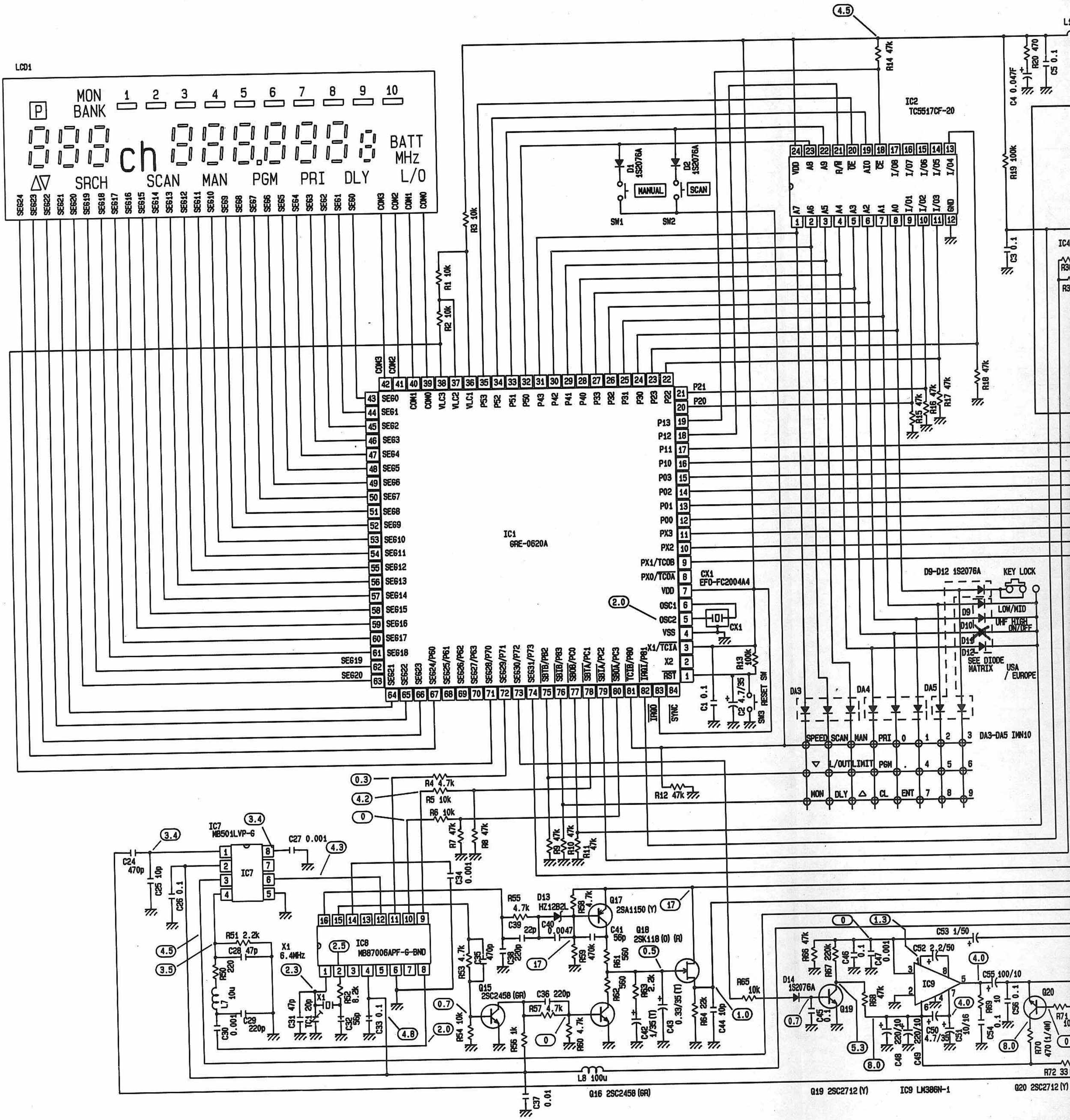

NOTES:

1. RESISTANSE VALUES IN OHMS (K=1000 M=1000000)
2. CAPACITANSE VALUES IN uF (P=uuF)
3. (T)-TANTALUM CAPACITOR
4. (M)-MYLAR CAPACITOR
5. NO SUFFIX : CERAMIC CAPACITOR
6. ⬭ THES SYMBOL DENOTES DC VOLTAGE MEASURED WITH DC VOLTMETER (100k / V) UNDER FOLLOWING CONDITONS: CH 1 LOW BAND AT 30MHz. MANUAL OPERATION. VOLUME AT MINIMAUM AND SQUELCH CCW
7. ⬭ THES SYMBOL DENOTES DC VOLTAGE FOR AIRCRAFT BAND OPERA
8. ⬭ THES SYMBOL DENOTES DC VOLTAGE FOR HIGH BAND OPERATION
9. ⬭ THES SYMBOL DENOTES DC VOLTAGE FOR UHF LOW/T BAND OPER
10. ⬭ THES SYMBOL DENOTES DC VOLTAGE FOR UHF HIGH BAND OPERA
11. RATING OR TYPE NUMBER OF COMPONENT PARTS ARE SUBJECT TO CH FOR IMPROVEMENT WITHOUT NOTICE

SCHEMATIC DIAGRAM (Logic Section)

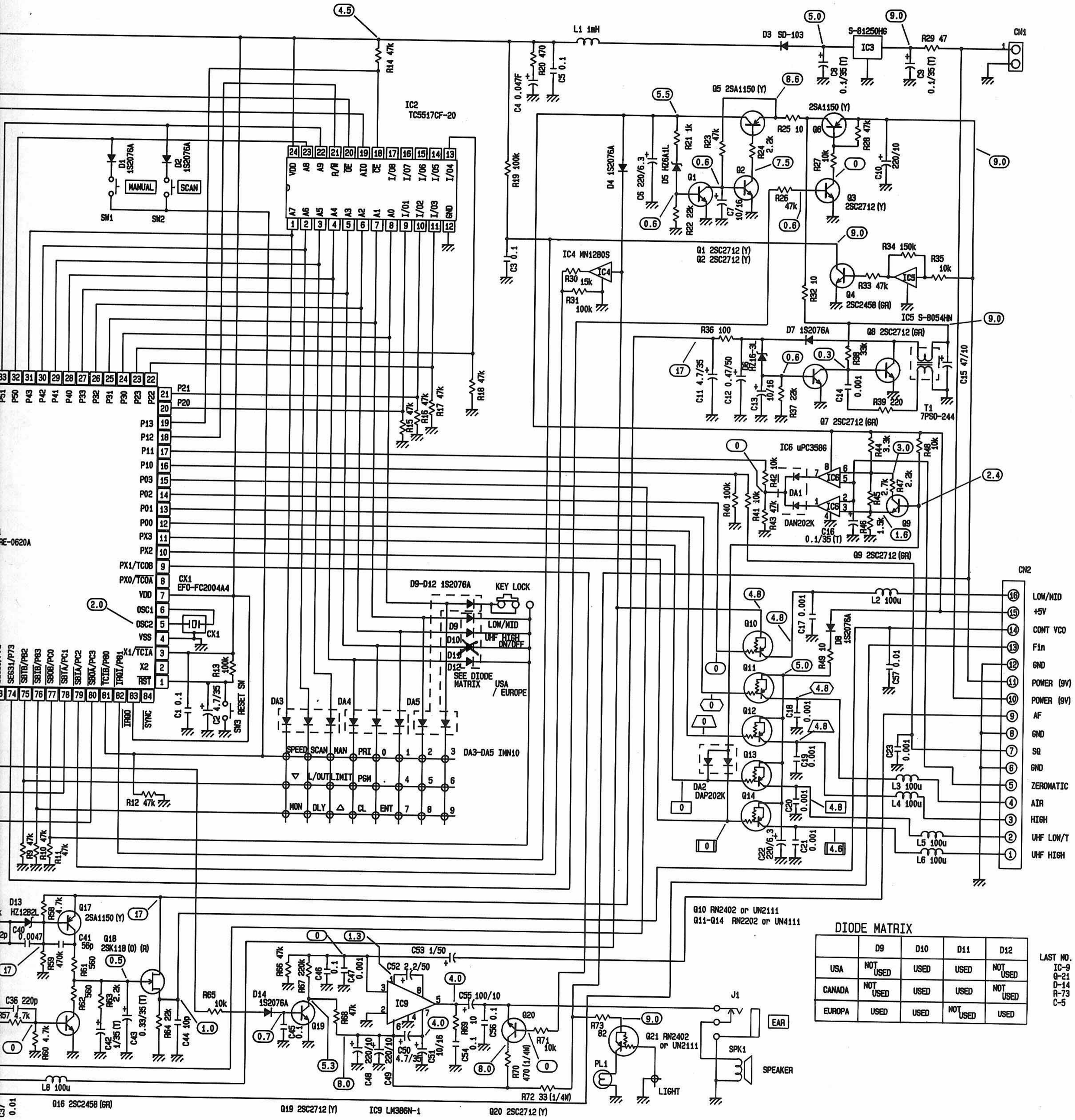

DIODE MATRIX

	D9	D10	D11	D12
USA	NOT USED	USED	USED	NOT USED
CANADA	NOT USED	USED	USED	NOT USED
EUROPA	USED	USED	NOT USED	USED

LAST NO.
IC-9
Q-21
D-14
R-73
C-5

7. THES SYMBOL DENOTES DC VOLTAGE FOR AIRCRAFT BAND OPERATION
8. THES SYMBOL DENOTES DC VOLTAGE FOR HIGH BAND OPERATION
9. THES SYMBOL DENOTES DC VOLTAGE FOR UHF LOW/T BAND OPERATION
10. THES SYMBOL DENOTES DC VOLTAGE FOR UHF HIGH BAND OPERATION
11. RATING OR TYPE NUMBER OF COMPONENT PARTS ARE SUBJECT TO CHANGE FOR IMPROVEMENT WITHOUT NOTICE

LTMETER (100k / V) UNDER FOLLOWING CONDITONS:
T MINIMAUM AND SQUELCH CCW

COPYRIGHT 1988

Notes

U.S. PATENT NOS.
3,794,925
3,801,914
3,961,261
3,962,644
4,027,251
4,092,594
4,123,715
4,245,348

RADIO SHACK
A Division of Tandy Corporation
Fort Worth, Texas 76102

7A8

Printed in Japan