ASSEMBLY AND OPERATION OF THE HEATHKIT SINGLE SIDEBAND ADAPTER

MODEL SB-10

SPECIFICATIONS

Power Output:	10 watts, P. E. P. (peak envelope power)
Excitation Requirements:	Less than 3 watts of RF at the fundamental operating frequency required.
Output:	Pi network coupling to low impedance coaxial line.
Input:	Low impedance for coaxial line feed.
Band Coverage:	80, 40, 20, 15, 10 meters.
Circuitry:	Phasing method of SSB signal generation is employed with voice control and anti-trip action built into the audio circuit.
Tube Complement:	1 - EL84/6BQ5 RF output 1 - 6CL6 RF driver 2 - 12AT7 balanced modulators 1 - 12AX7 speech amplifier 1 - 12AT7 modulator 1 - 12AT7 voice control and anti-trip amplifier 1 - 12AT7 audio driver and relay control 1 - 6AL5 voice control and anti-trip bias rectifier

Copyright 1960
Heath Company

Unwanted Sideband Suppression:.....	In excess of 30 db.
Carrier Suppression:.....	In excess of 40 db.
Power Requirements:.....	350 VDC, 85 MA (Average) 30 MA (Standby) 140 MA (Transmit) 6.3 VAC, 3.5 AMP
Meter:.....	2 1/2", 200 ua movement, indicates carrier null and relative power output.
Cabinet:.....	10" high, 6 3/4" wide, 13" deep.
Net Weight:.....	10 lbs.
Shipping Weight:.....	14 lbs.

INTRODUCTION

The SB-10 is designed specifically as a matching accessory unit to the Heathkit "Apache" Model TX-1 Transmitter to provide a capability for SSB operation on the 80, 40, 20, 15, and 10 meter amateur bands. While the SB-10 can be plugged directly into the "Apache", with slight modifications it can be used with the Heathkit DX-100 and DX-100B transmitters. The primary feature of the SB-10 is that it allows utilization of all RF circuitry in the companion transmitter, thus making use of the operator's investment in AM gear and enabling him to retain his high level AM capability. This feature brings the cost of an SSB capability within the budget of all amateurs and will afford them the opportunity to experience the advantages of SSB operation.

The SB-10 obtains power from the companion transmitter. It features a built-in electronic voice control with anti-trip circuitry to prevent the receiver audio output from keying the transmitter during listening periods. A sensitive tuning meter is provided for accurate carrier null and indication of relative power output. Panel controls include the bandswitch, balanced modulator and output tuning, two carrier null controls, sideband selector (upper, lower, AM), function switch (VOX, standby, manual), audio gain, and the microphone connector. Two controls on the rear apron provide VOX and anti-trip sensitivity adjustment. Relay contacts are provided for receiver muting, keying the exciter stages of the transmitter, and operating an antenna relay. The power plug plus the input and output connectors are also located on the rear apron.

Before proceeding with the circuit description of the SB-10, it may be desirable to explain the nature of an SSB signal, give a brief history, and discuss the advantages of SSB operation plus methods of generating a SSB signal.

The normal 100% amplitude modulated RF carrier presents a frequency spectrum like that shown in Figure 1.

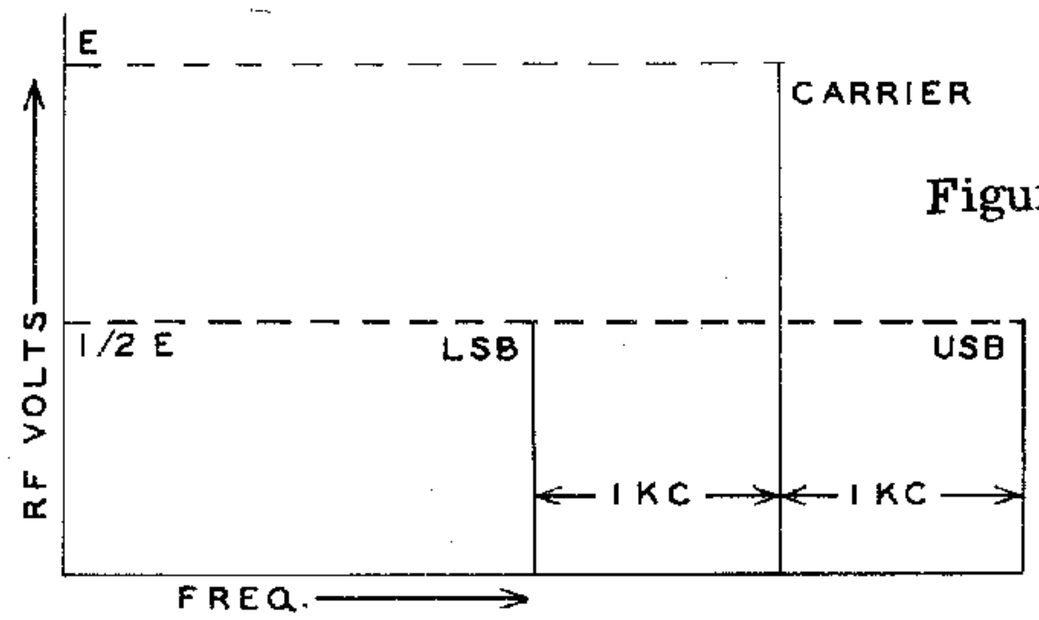

Figure 1

For illustrative purposes, we will assume that the modulation consists of a single tone. Speech modulation, of course, will produce side frequencies occupying identical bands on the upper and lower sides of the carrier; thus the term sidebands. The carrier itself conveys no intelligence; all intelligence is contained in the sidebands. Furthermore, since the lower and upper sidebands are identical, one sideband can also be eliminated leaving only that part of the signal necessary to convey intelligence, a single sideband. The carrier can be re-inserted at the receiver for demodulation purposes, thus completing the picture. What is gained by this process?

First, for a given amplifier peak power rating, by eliminating the carrier, we can double the amplitude of each sideband. This increases the total sideband power $(1+1)^2$ or 4 times. Referring to Figure 1, it is apparent that each sideband of a 100% amplitude modulated carrier is one half the amplitude of the carrier or, squaring once again, 1/4 the carrier power. Total sideband power is 1/4 + 1/4, or 1/2 the carrier power. Notice that the peak power rating of the 100% amplitude modulated amplifier is equal to the power at the instant all the voltage elements of Figure 1 add. This is equal to $(2)^2$ or 4 times the carrier power. Thus, by further eliminating one of the two sidebands, we can double the total sideband power once again and still not overload the amplifier on peaks (4 x 2 x 1/2 carrier power = 4 x carrier power). Since the total sideband power is multiplied 8 times, an increase in "talk-power" of 9 db is realized. Second, by eliminating the carrier, we eliminate the QRM caused by carrier hetrodynes. Third, spectrum space is conserved since only half of the original AM spectrum is required. This also enables the operator to cut his receiver bandwidth in half, further reducing exposure to QRM.

SSB operation presents two primary obstacles, one physical and the other psychological. Stable oscillators for transmitting frequency control and carrier insertion at the receiver are a prime requisite. This problem can be overcome by proper design and has been solved by the manufacturers of receivers and SSB transmitting equipment producing for today's market. The supposed complexity of SSB equipment is the psychological obstacle. However, there is nothing about SSB circuit theory and equipment that cannot be easily grasped by the average amateur after a little study of the numerous articles and books published on the subject. Most of the basic circuits are familiar and only vary in their application. The initial investment in SSB equipment for low power will be somewhat more than for comparable power AM equipment. Despite this, more effective communication will be realized with the SSB equipment at the same power level. Furthermore, the investment required to go to higher power will always be considerably lower for SSB equipment since no high level modulation equipment is necessary.

The principles involved in SSB transmission have been known for many years, but the lack of commercially available sharp cutoff filters, high stability crystals, and audio phase shift networks restricted SSB application to relatively few fields, primarily long distance telephone work. However, with the radio frequency spectrum becoming more and more crowded, some services began to use SSB as a means of conserving available space. The military led the way to more widespread use of SSB. The FCC then began to order other services to convert to SSB and the ensuing transition in recent years has not only stirred up significant amateur interest but also brought about the commercial availability of components for SSB equipment at reasonable prices.

Two methods of generating an SSB signal are commonly employed in amateur equipment. One method employs very sharp filters of either the LC, crystal or mechanical type to pass one sideband and suppress the other. These filters exhibit best characteristics at lower frequencies. Therefore, filter type SSB transmitters employ heterodyne methods of converting the low SSB frequency to the desired band. The filtering method has the advantage that frequency stability is easier to obtain at lower frequencies. Its one disadvantage is complex filter design and adjustment plus somewhat higher cost. Carrier suppression is obtained through the use of a balanced modulator.

The phasing method of SSB signal generation is more complex in theory than filtering, but has the distinct advantages of lower cost, easier adjustments, plus equally good performance at all frequencies. Since the phasing method is employed in the SB-10 it will be explained in some detail.

The phasing method of generating a single sideband signal can best be explained using two simple vector diagrams and then referring to a simplified schematic diagram to see how the method is practically applied.

Before proceeding, it may be advisable to become re-acquainted with vector algebra. Quantities which represent magnitude only, such as inches, cubic feet, or degrees, are called scalar quantities and can be represented merely by numbers. However, quantities which represent

both magnitude and direction, such as force or alternating voltage, are called vector quantities and are usually represented by vector diagrams. In vector diagrams, the length of the vector indicates its magnitude, and the vector's angular displacement from some reference point indicates its direction. In referring to vector diagrams of alternating voltage, remember that time is frozen for the instant of observation since, when dealing with cyclic waveforms, the vector, in actuality, would be rotating at a rate equal to one full 360° revolution per cyclic period.

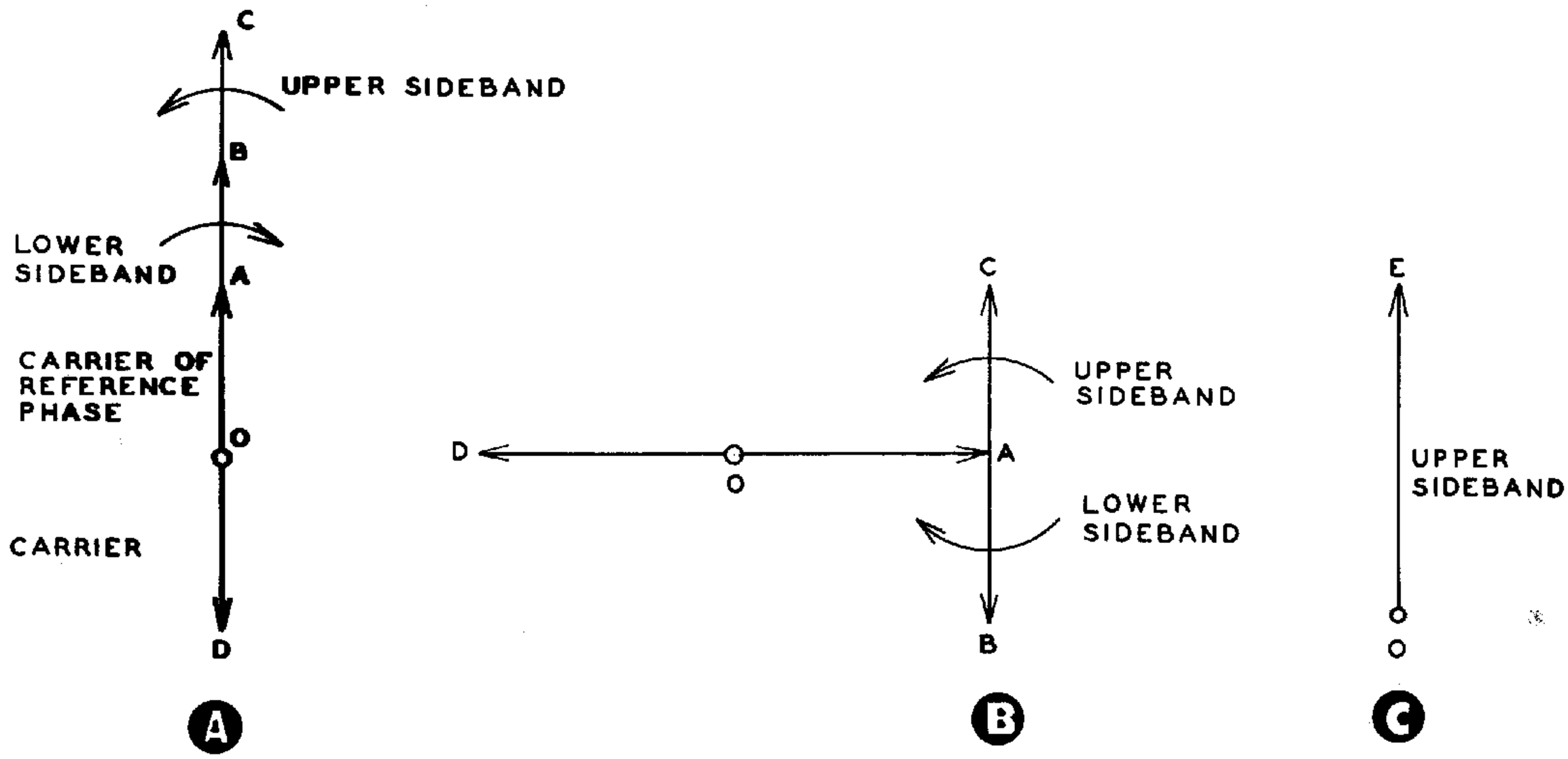

Figure 2

Referring to Figure 2, suppose a carrier of reference phase OA is fed to two "black boxes" where it is modulated and operated upon until the output of "black box A" can be represented by the entire vector diagram A, and the output of "black box B" can be represented by the entire vector diagram B. Diagram A represents the reference carrier, modulated with a reference tone, plus another carrier component equal in magnitude and 180° out of phase. Diagram B represents a carrier equal in magnitude to the reference carrier but displaced 90°, plus another carrier component equal in magnitude and 180° out of phase. The diagram further indicates that the displaced carrier is modulated by a tone displaced 90° from the reference modulating tone. By simple vector addition of both diagrams, it can be seen in Diagram C that all carrier voltage is cancelled out along with the lower sideband, while the upper sideband reinforces to become twice its original magnitude. Thus, the phasing method of SSB signal generation requires circuitry to provide 90° carrier phase shift, 90° audio phase shift, and carrier suppression.

In actual practice, each "black box" referred to above contains a balanced modulator and a 45° carrier phase shift network, while the 90° audio phase shift is accomplished externally before application. Referring to Figure 3 on page 6, the incoming RF is split into two components by the two R_1 C_1 passive phase shift networks, one leading the incoming signal by 45°, the other lagging by 45°. The net result is the required phase difference in the RF input to the two balanced modulators V_1 V_2 and V_3 V_4 of 90°. The audio signal is fed to an RC network whose two outputs have a difference in phase of 90° over the frequency range of speech. By applying these two outputs to T_1 and T_2, two modulating voltages 180° out of phase with each other can be applied to balanced modulator V_1 V_2 and another two 180° out-of-phase modulating voltages can be applied to balanced modulators V_3 V_4. The 180° out-of-phase voltages are required for proper modulation of a balanced modulator. However, the net phase differences applied to each balanced modulator is only 90°.

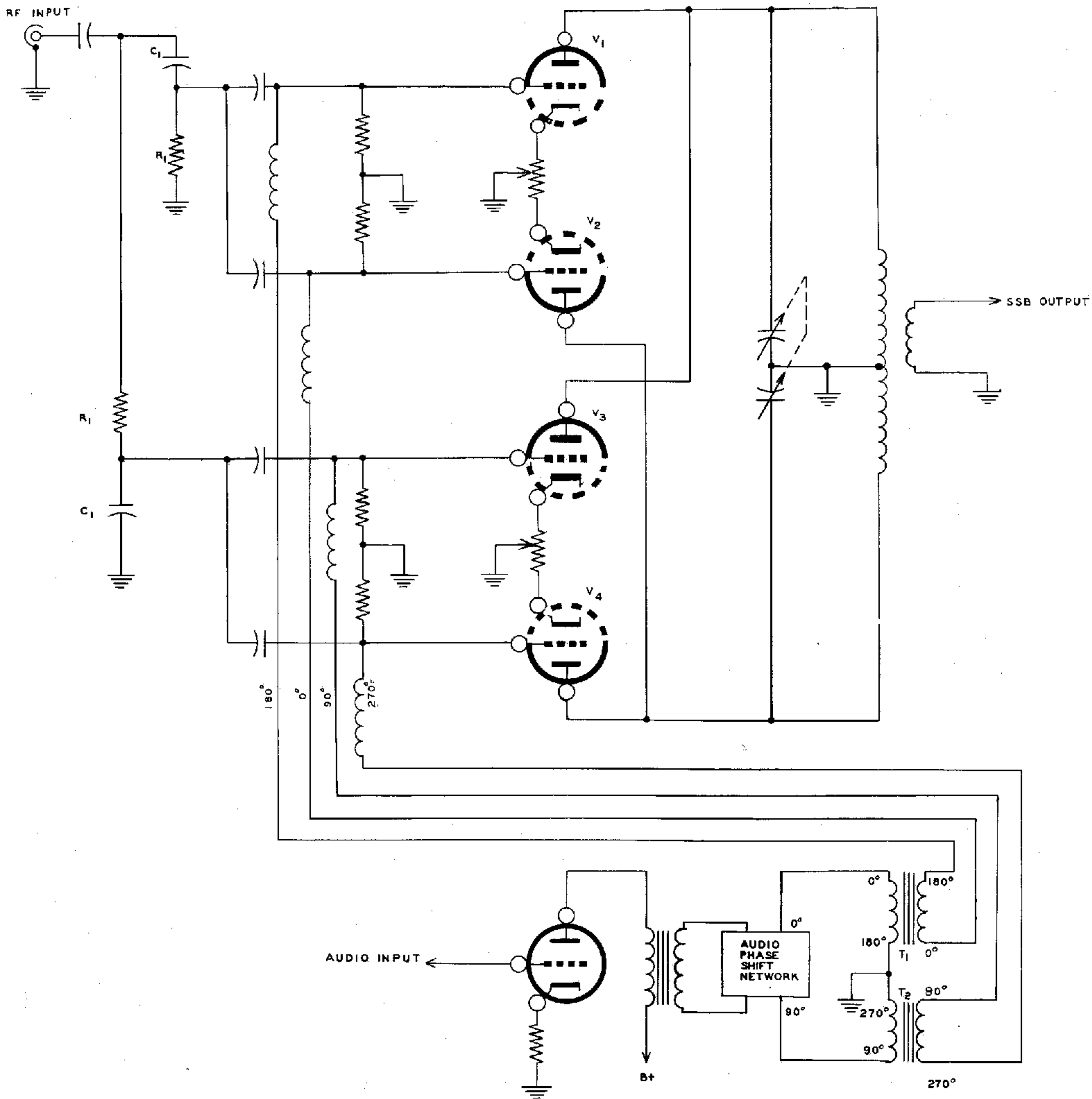

Figure 3

A balanced modulator is normally employed to suppress the carrier. A single balanced modulator can be designed to balance out either or both input signals but cannot balance out one sideband and not the other. Hence, the necessity for two balanced modulators, as used here, with output circuits connected in push-pull-parallel. With the RF inputs to V_1 and V_2 in parallel and the outputs of V_1 and V_2 in push-pull, the carrier is split into two components in the output circuit, each equal but 180° out of phase with each other. Since the same configuration exists in V_3 and V_4, the carrier is balanced out in each modulator. Thus, with all conditions satisfied (90° phase difference between both RF and audio inputs to each of the balanced modulators and the carrier suppressed), the result is a single sideband output signal.

CIRCUIT DESCRIPTION

The following block diagram and circuit description will show the builder how the theory of the phasing method has been practically applied in the SB-10 and will result in an even better understanding of the adapter. This knowledge will aid in construction and possible trouble shooting, and thus is well worth digesting.

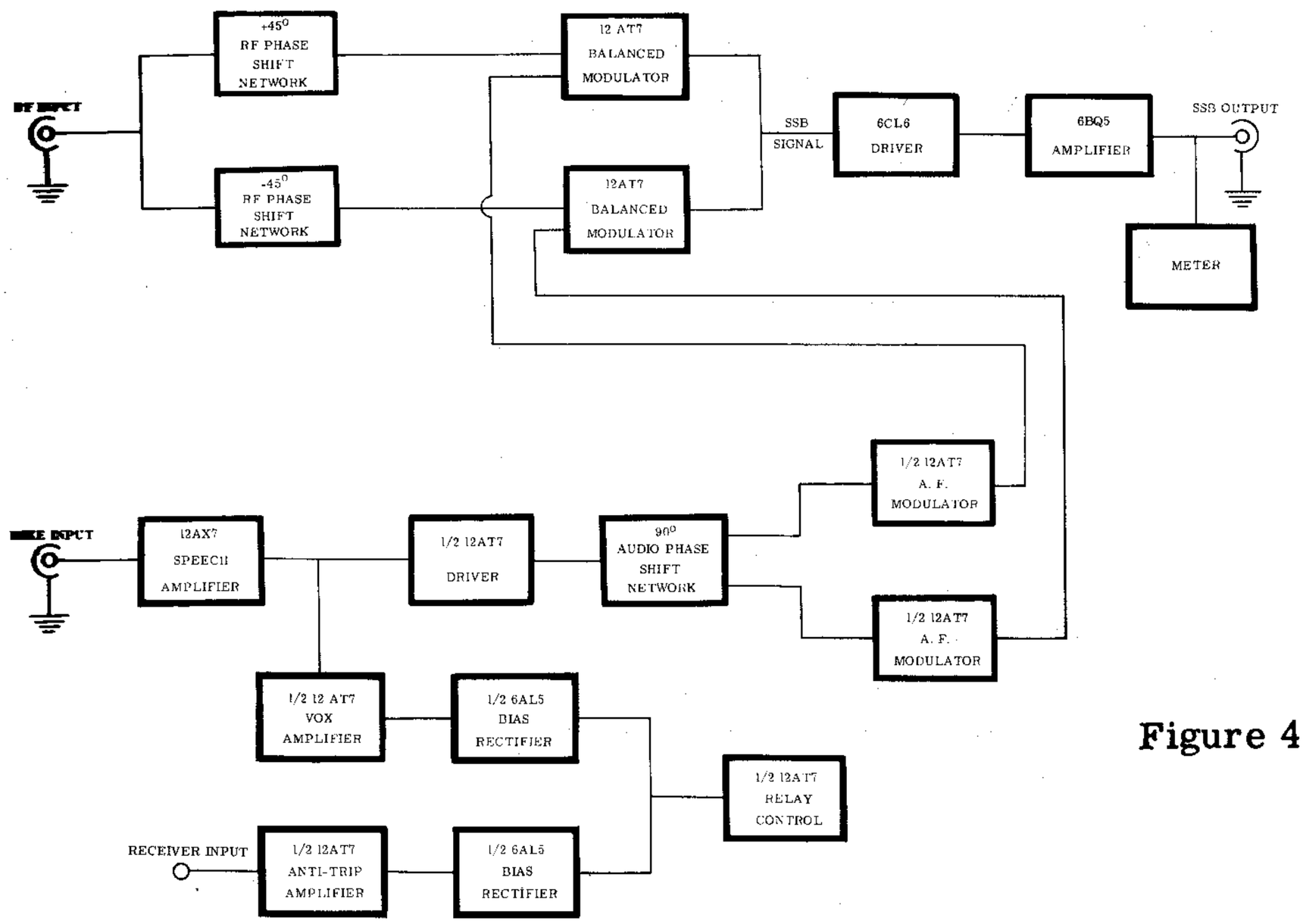

Figure 4

SB-10 BLOCK DIAGRAM

AUDIO AND PHASING CIRCUITRY

The 12AX7 dual triode tube provides two stages of resistance coupled speech amplification with sufficient gain for a high impedance microphone input. The design of the speech amplifier circuitry favors an audio frequency range of from 300 to 3000 cycles per second. The output of the speech amplifier is capacitively coupled through a gain control to one section of a 12AT7 acting as an audio driver. The output of the driver is transformer coupled to the low impedance side of a 90° audio phase shift network which is designed to operate over the audio range of 300 to 3000 cycles per second. By restricting the audio frequencies to the stated limits, errors in the 90° phase shift network, which will directly impair the suppression of the unwanted sideband, are minimized.

A control, known as the phase balance control, is connected across the low impedance (500 ohms) side of the interstage transformer which feeds the passive network. The function of the control is balancing the input circuit to the network.

The output of the phase shift network is of a relatively high impedance and is connected to the two grids of a dual triode 12AT7 tube. This tube functions as the modulator.

The cathodes of the 12AT7 modulator are biased with a variable and fixed resistor configuration. The purpose of the control is for audio balance. This tube must deliver equal output to the primary of each of the two modulation transformers.

VOICE CONTROL AND ANTI-TRIP CIRCUITRY

The output of the speech amplifier is also capacitively coupled to one section of a dual triode 12AT7 tube acting as the vox voltage amplifier. The other half of the 12AT7 tube acts as the anti-trip amplifier and receives and amplifies the receiver output, which is transformer coupled to the grid.

Before the Model SB-10 Single Sideband Adapter can be tested, adjusted, and put into actual operation, it will be necessary to make up the necessary connecting cables and modify your present transmitter for use with the adapter. No transmitter modification is necessary if the Heathkit "Apache" Model TX-1 is used as the companion transmitter to the SB-10, since the two units are designed to be completely compatible.

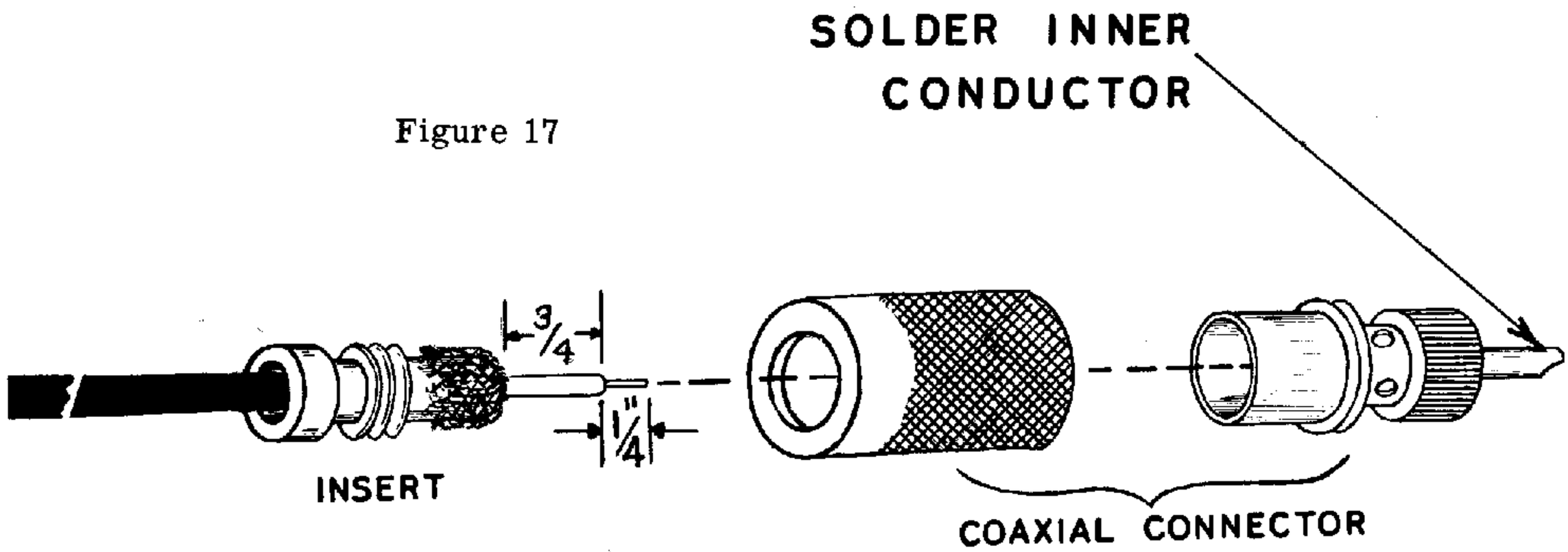

Figure 17

Prepare the connecting cables as outlined in the following steps:

( ) **Cut the remaining** length of coaxial cable into two equal parts. Each piece should be approximately 3' long. Locate the four male coaxial cable connectors and adapters. Referring to **Figure 17,** place a connector on each end of both lengths of coaxial cable.

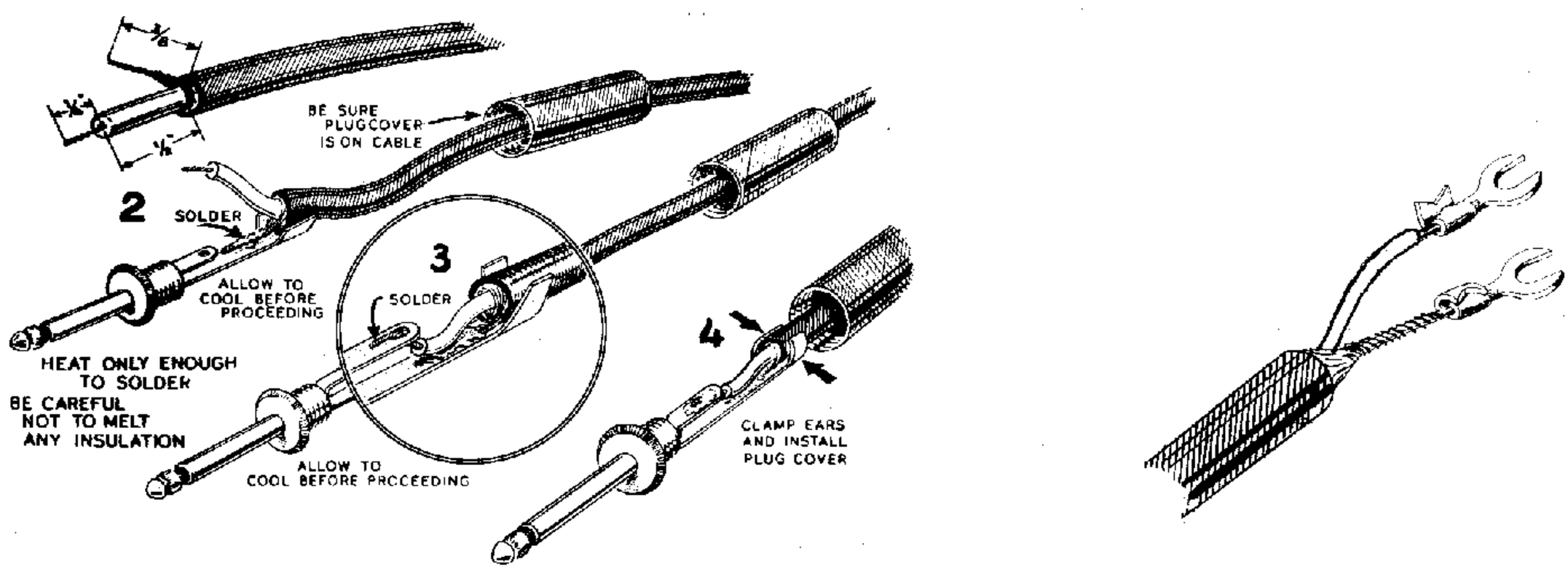

Figure 18

( ) Locate the length of single conductor shielded wire. Referring to Figure 18, strip the outer jacket off one end for a distance of 1", unwind the shield wire, twist and tin. Strip and tin 3/8" of the center conductor. Now solder a terminal spade lug on each tinned lead. On the other end of the shielded wire, place a phone jack as shown.

Figure 19

( ) Locate the length of 3 conductor shielded cable. Referring to Figure 19, strip the outer jacket for a distance of 1" from each end of the cable. Then unbraid and twist the shield into a pigtail. On one end, strip and tin each wire for a distance of 3/8". Slide an octal socket cap over this end and connect the white lead to pin 5, the red to pin 6, the black to pin 7, and the shield to pin 8 of a female octal socket. Now snap the cover into place. At the other end, strip and tin each lead for a distance of 1/2". Slide an octal plug cover over the cable. Connect the white lead to pin 5, the red to pin 6, and the black to pin 7 of a male octal plug. Using a short length of #20 bare wire, connect the shield to pin 8. Trim off any excess shield. Now snap the cover into place.

To connect the adapter to the Heathkit "Apache" Model TX-1 Transmitter, connect one coaxial cable between the connector on the back of the transmitter marked "RF Excitation to SSB Adapter" and the "RF Excitation Input" connector on the adapter. Connect the other coaxial cable between the connector on the back of the transmitter marked "SSB Input to Final" and the "SSB Output" connector on the adapter. Plug the female end of the shielded power cable into the adapter and the male end into the transmitter accessory socket. Now connect the center conductor spade terminal on the single conductor shielded wire to terminal strip lug #4 on the back of the adapter and connect the shield to terminal #2. Plug the phone jack on the other end of the wire into the key jack on the front of the transmitter. After connecting a dummy load to the RF output connector of the transmitter and making sure the proper AB1 operating conditions have been set up in the "Apache" (see the Model TX-1 Manual), the SB-10 is ready for testing and adjustment.

If the SB-10 is intended for use with Heathkit Model DX-100 or DX-100B Transmitter, a modification of these units is necessary. A single modification kit applicable to either the DX-100 or DX-100B can be purchased from the Heath Company. This kit contains all necessary components and hardware and is supplied with complete and detailed instructions. However, the modification is not complex and since most "junk boxes" will furnish the necessary parts, the information on the modification is included here.

Three basic changes are made in the DX-100 and DX-100B when modifying these transmitters for SSB operation. First, the RF path is broken between the output circuit of the driver (5763) stage and the grids of the final amplifier (2-6146). The drive is brought out to a coaxial connector on the rear of the chassis. The final amplifier grid lead is also brought out to a second coaxial connector on the rear of the chassis. Second, the final amplifier is placed in Class AB1 for

linear operation. The final amplifier screen voltage is regulated at 210 volts with two OB2 voltage regulator tubes in series. The bias is then adjusted to give 50 ma of resting plate current. Third, a provision is made for lifting the ground end of the fixed bias resistor string during standby periods to cut off the final amplifier without removing plate voltage. This eliminates excessive switching of plate transformer primary power.

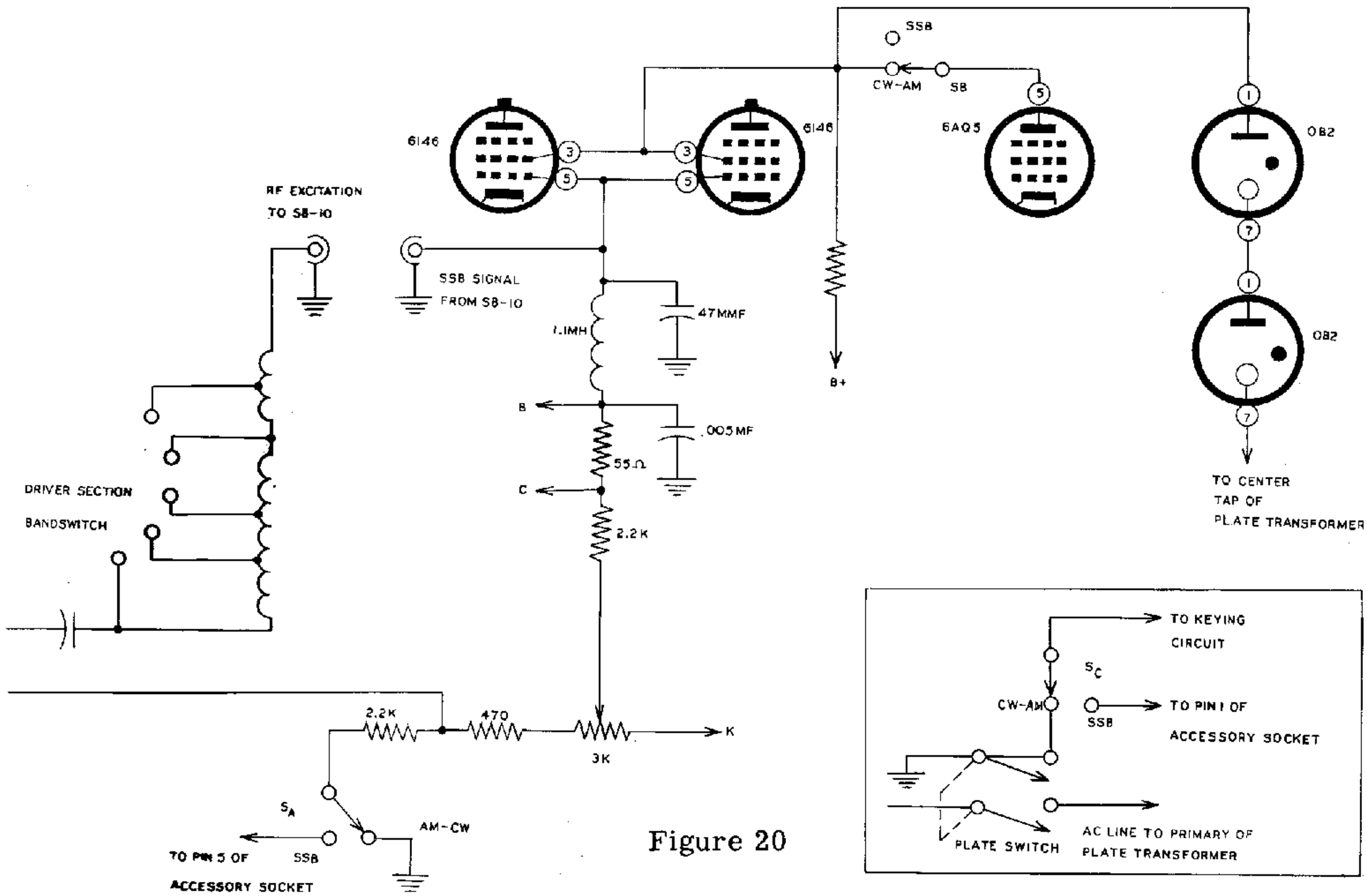

Figure 20

Referring to the schematic diagram in Figure 20, these changes are self-evident. A DPDT toggle switch mounted on the right hand side of the front panel above the chassis performs two functions. One switch section switches the clamp tube in and the VR tubes out of the circuit for Class C operation and the clamp tube out and the VR tubes into the circuit for Class AB1 operation. The 6146 screen dropping resistor becomes the VR tube load resistor in linear operation. While the regulator tubes are not physically disconnected from the 6146 screen during Class C operation, they will not conduct since the Class C screen voltage is below the firing voltage of the tubes. The second switch section grounds the end of the fixed bias resistor string in the normal manner for CW or AM operation (Class C) but allows this function to be performed remotely in the SB-10 during SSB operation (Class AB1) by routing the lead through pin 5 of the accessory socket. A 3 KΩ control replaces the 2.2 KΩ resistor (between DD1 and EE1 in the DX-100 or DX-100B manual) in the bias string to provide a means of varying the fixed bias to the proper value for Class AB1 operation. Once set, this control needs no further adjustment since the rest of the bias required for Class C operation is developed by grid current flowing through the grid resistor.

Power for the adapter is brought out through the accessory socket. Filament voltage should be brought out through pin 7 and B+ through pin 6. The two blue 500Ω audio leads on terminal strip GG, already connected to pins 6 and 7, can be connected to suitable points to make this modification. The ratings of the DX-100 and DX-100B transformers are conservative enough to allow this extra load. If extended operation on SSB is contemplated, it is suggested that the modulator and speech amplifier tubes (1625, 12BY7, 12AX7) be removed to reduce the filament current drain. The SB-10 requires 300-350 VDC at 85 ma and 6.3 VAC at 3.5 A.

It is suggested that the drive be taken from the feedthrough insulator (point X in the DX-100 or DX-100B Manual) through a length of RG-62/U coaxial cable to a connector mounted on the rear apron of the chassis in the high voltage power supply compartment. Drill a hole in the intervening partition to allow passage of the cable. Disconnect the lead from the final amplifier grid circuit side of the feedthrough insulator to the terminal strip, thus breaking the RF path at this point. Mount a second coax connector on the rear apron of the transmitter directly behind the rearmost 6146 tube socket. Connect the center pin of this connector directly to the grid buss with #16 bare wire. This modification will require a jumper of RG-62/U coax between these added connectors for AM and CW operation in order to restore the normal RF path. RG-62/U cable is recommended in this application to minimize loss of drive at the higher frequencies.

The switch can be mounted on the front panel in the area beneath the "Heathkit" nameplate. The VR tubes and bias control can be mounted on a small aluminum bracket which can be secured under one of the power transformer mounting screw nuts near the LV filter choke. After replacing the 2.2 KΩ 1 watt bias string resistor (between terminal strip DD-1 and EE-1) with a 3 KΩ control, reconnecting the end of the 2.2 KΩ 1/2 watt resistor (connected to DD-1) to the control center lug, and running an extension of the ground end of the bias string (previously connected to DD-2) to the switch, the wiring is straightforward.

If the DX-100 or DX-100B, intended for use as a companion unit with the SB-10, has been previously modified to employ grid block keying of the buffer (12BY7) stage, the fact that the VFO is on at all times may cause objectionable interference during standby periods. If SSB and AM are the modes of operation most frequently employed, a return to the original cathode keying circuit is recommended. To retain the grid block method of keying but render the VFO inoperative during SSB standby periods, a suggested solution is shown in dotted lines on the schematic. By using a 3PDT switch of the rotary or lever type in place of the DPDT mentioned previously, the extra switch section can be employed to route the VFO and buffer cathode return to pin 1 of the accessory socket directly for external grounding during transmitting periods only, thus bypassing the plate switch, which is on continuously during SSB operation. A variation of this solution to the problem would be to accomplish switching of the plate transformer primary power externally by placing an external SPST switch across pins 3 and 4 of the accessory socket. Then, leaving the plate switch on the front panel in the OFF position, the cathode return lead appearing on pin 1 of the accessory socket can be grounded externally during transmitting periods. The external plate power switch can be mounted at any convenient location on the operating desk. To accomplish external grounding of the cathode return lead, refer to "Operation" on page 56.

Once the modification is complete, check your wiring once again. Connect a temporary jumper between pin 5 and pin 8 of the accessory socket. Now with the SB-10 disconnected from the transmitter, turn the power on. Place the "CW-Phone" switch in "CW" position and turn the drive control full CCW. After warmup, with the switch in Class AB1 position and no jumper between the adapter coaxial connections, apply plate voltage watching the plate current closely. Quickly adjust the fixed bias control until 55 ma of plate current is indicated. If the plate current is excessive or cannot be brought to this value, turn off the plate power and check your work once again. Once 55 ma of plate current is indicated, check to make sure the two OB2 voltage regulators are showing a soft blue glow. If a VOM or VTVM is available, the grid buss should show approximately -50 volts DC and the screens of the 6146's (pin 3) should show 210 VDC. Now turn the plate power off, place the switch in Class C position, and connect the short coaxial jumper between the adapter coax fittings on the back of the transmitter. Using a dummy load, check for normal AM or CW operation. A slight decrease in available grid drive can be attributed to the length of coax added to the RF signal path.

Once the modification is complete and the above tests are made, connect the SB-10 to the transmitter as described previously. If required, as outlined above, provide a ground-when-transmitting connection for the VFO and buffer cathode return. Now proceed with testing and adjustment of the SB-10 Adapter.

( ) Connect the SB-10 to the companion transmitter as described in the preceding section. During the following test procedure and all subsequent operation on SSB, make sure the transmitter is in its SSB operating mode and both transmitter and adapter band switches are set on the same band.

( ) With the transmitter set for SSB operation, both power and plate switches on the transmitter in the OFF position, and the transmitter drive control full CCW, select the 80M band position on both the transmitter and adapter and set the SB-10 controls as follows:

Sideband selector	either UPPER or LOWER
Carrier Null A	full CCW
Carrier Null B	full CW
Audio Gain	full CCW
Function switch	STANDBY
Balanced modulator	5
Output	5
Transmitter sensitivity	full CCW (on rear apron)
Receiver sensitivity	full CCW (on rear apron)
* Audio balance	50% rotation from full CCW
** Phase balance	25% rotation from full CCW

*This is the screwdriver adjustment on the audio and phasing deck nearest the left edge of the chassis.

**This is the screwdriver adjustment on the audio and phasing deck nearest the center of the chassis.

( ) Place the power switch on the transmitter in the ON position. Check for any signs of overheating in the SB-10 and make sure all the tubes are lighted. Leave the transmitter plate switch in the OFF position.

( ) If no abnormal operation is noted in the preceding step, turn the SB-10 function switch to "MANUAL". The relay should close and the "Relative Power Output" meter may read slightly upscale. Once again, check for any signs of overheating or excessive plate dissipation in any tube, as indicated by the plate showing a red glow. If any signs of abnormal operation are apparent, return the function switch to STANDBY and recheck your work.

( ) Rotate the drive control on the transmitter about one-quarter turn from the extreme CCW position and tune the transmitter driver output circuits for maximum SB-10 meter indication.

( ) Tune the balance modulator control on the adapter for maximum meter reading and then tune the output control for maximum meter reading. Finally, adjust the slug in coil L1 on the RF sub-chassis for maximum SB-10 meter reading. Once L1 is so adjusted, it will need no further adjustment.

( ) Notice that, as the transmitter drive control is advanced in a CW direction, a point is reached where increased drive does not produce an increase in SB-10 meter reading. In all cases, the transmitter drive should be set just below this point for proper operation. After making all the preceding adjustments, the SB-10 meter should be reading in the upper third of the scale.

( ) Return the SB-10 function switch to STANDBY. Now place both the transmitter and adapter band switches in the 40M position and repeat the three preceding steps, this time finally adjusting the slug in coil L2 on the RF sub-chassis for maximum meter reading. Using the same procedure, adjust L3 for maximum indication on 20M, L4 for maximum indication on 15M, and L5 for maximum indication on 10M. The maximum indication on 10M may be less than for the lower bands but this is normal.

( ) Return the transmitter and adapter to 80M and, with the function switch in manual position, tune up once again. Now adjust carrier null A and carrier null B simultaneously for a minimum meter reading. The two controls will interact and it should be possible to null the carrier to a point where there is no meter reading. Once a null is obtained, both carrier null controls should be approximately in mid-position.

( ) Connect a hi-impedance microphone (crystal or dynamic) to the microphone input connector. Place the transmitter meter switch in the final amplifier grid current position. While speaking into the microphone, advance the audio gain control from its full CCW position. At approximately 25% rotation of the gain control, the SB-10 meter should hit a maximum reading on voice peaks that is about one-third the maximum reading before the carrier was suppressed. At the same time, the transmitter meter should begin to show slight vertical upward kicks in final grid current in the order of a fraction of a milliampere. Do not advance the audio gain control beyond this point.

( ) Place the function switch in the VOX position without changing any other setting. While speaking into the microphone, advance the transmitter sensitivity control on the rear apron of the SB-10 from its full CCW position until your normal operating voice produces positive relay operation. The setting of this control will vary slightly for different microphones and voices. The relay should open upon any hesitation in speech, indicating proper VOX operation.

( ) Return the function switch to STANDBY position and, noting its present position for future reference, turn the audio gain full CCW. Place the function switch in MANUAL position and re-insert some carrier by rotating one carrier null control (either A or B) until about one-half of the maximum unsuppressed carrier SB-10 meter reading is obtained.

( ) Make sure a dummy load (incandescent lamp of suitable wattage) is connected to the RF output of the transmitter. Place the transmitter meter switch in the final plate current position and the loading control at its minimum position. Place the transmitter plate switch in the ON position and tune the final amplifier for minimum plate current. Insert maximum carrier by further rotating the carrier null control previously used for partial carrier insertion to its extreme position. Now load the final amplifier to 250 ma using normal loading procedure. Load the final quickly to avoid damage to the tubes due to excessive plate dissipation.

( ) Leave the transmitter plate switch in the ON position and null the carrier once again by returning the carrier null control used for carrier re-insertion to the minimum SB-10 meter reading position. The dummy load lamp should be dark with the carrier suppressed and the final amplifier plate current should be at its 50 ma resting value.

( ) Place the function switch in VOX position without changing any other control settings. Advance the audio gain control to the point previously noted and speak into the microphone. The dummy load lamp brilliance, final amplifier plate current, and SB-10 meter reading will peak together on voice peaks. Check the final amplifier grid current; the meter should kick up very slightly on extreme voice peaks. On voice, the meter reading final amplifier plate current cannot respond fast enough to read actual current peaks. Therefore, while the final amplifier is loaded to 250 ma, the peak reading under modulation should be only 100 to 125 ma to prevent "flat-topping".

( ) With the function switch in VOX position, check to see if the final amplifier plate current and driver plate current go to zero when standing by and the relay opens. This indicates proper connections in the VOX relay circuit.

( ) Turn the transmitter plate switch OFF and return the SB-10 function switch to STANDBY and the audio gain full CCW.

NOTE: An audio generator capable of producing a clean 1000 cps sine wave will be required to perform the following steps. An oscilloscope is also desirable but will not be necessary if a good selectable sideband SSB receiver is available. If these items are not part of the builders ham shack test equipment, they can usually be borrowed from another ham or a radio-TV service shop. For the amateur contemplating extensive SSB operation, the purchase of these two items will prove a wise investment. These items will also find numerous other uses around the ham shack. A complete line of suitable test equipment is offered in kit form by the Heath Company.

( ) Connect the output of the audio generator to the microphone input on the SB-10. Set the frequency to 1000 cps and adjust the output voltage to approximately 30 millivolts. If output voltage control or calibration is not provided, use a 500 KΩ control to divide the output voltage down to a level low enough to insure that the speech-amplifier is not being overdriven.

( ) Connect the vertical input of the oscilloscope, if available, across the transmitter dummy load. A direct connection may be used since, due to the low output impedance, the voltages developed will not be excessive. If additional vertical attenuation is required, use a 50-100 mmf coupling capacitor.

( ) Tune up the transmitter and adapter on 80M and load the transmitter final to 250 ma.

( ) If an oscilloscope is not available, or as an additional indicator of unwanted suppression, insert some carrier and tune an SSB receiver to zero-beat the carrier. Now null the carrier. If excessive radiation from the exciter stages of the transmitter, which is operating on the fundamental frequency, tends to block or overload the receiver, physically separate the receiver from the transmitter until the feedthrough is minimized. Shorting the receiver antenna input terminals may help.

NOTE: When using the single tone test as described in the following steps, keep the intervals of test "on time" to a minimum to avoid exceeding the average plate dissapation of the 6146 final amplifier tubes.

( ) Now advance the audio gain control until about 125 ma of final amplifier plate current is indicated. Adjust the vertical gain of the oscilloscope for full scope face height. If an SSB receiver is being used, select the unwanted sideband on the receiver.

( ) Now adjust the phase balance and audio balance control for minimum ripple on the scope pattern or for minimum S-meter reading, if an SSB receiver is being used. This method of adjustment is based on the principle that for a single audio tone input, the RF output consists of a single RF signal, the desired sideband. On an oscilloscope, this RF signal looks like a CW signal, that is, a smooth strip.

( ) During the adjustment of the phase balance and audio balance control, note that the spacing of the ripple peaks due to carrier is twice that of those due to unwanted sideband. Thus, it is possible to tell what kind of adjustment is needed. The carrier null controls affect carrier suppression and the audio and ratio balance controls affect unwanted sideband suppression.

( ) Once maximum suppression has been obtained for one sideband, select the other sideband on the SB-10. The suppression on this sideband will probably not be as good as on the other sideband. Readjust the balance controls until a compromise is reached where the suppression of either sideband is equally good. This is important even though operation on one particular sideband is never intended.

( ) Refer to the table in Figure 21 on page 56. If an oscilloscope is being used, reference to this table will give a good approximation of the amount of unwanted sideband suppression obtained. When adjusted and operating properly, the SB-10 will exhibit about 30 db unwanted suppression on either sideband. The suppression obtained during this procedure on 80M will hold for all other bands and no further adjustment is required.

( ) To demonstrate the relationship of actual RF peaks to indicated plate current peaks, disconnect the audio generator from the microphone input and reconnect the microphone. While speaking into the microphone, adjust the audio gain to the point where about 125 ma peaks are indicated on the meter. Notice that the RF peaks on the scope are just beginning to "flat-top". These RF peaks correspond to actual plate current peaks of about 250 ma but the meter cannot follow fast enough. Thus, the maximum indicated plate current peaks are much lower.

( ) Turn the transmitter plate power OFF and place the SB-10 function switch in STANDBY. Disconnect the oscilloscope from the dummy load and the audio generator from the microphone input. Connect the microphone to the microphone input.

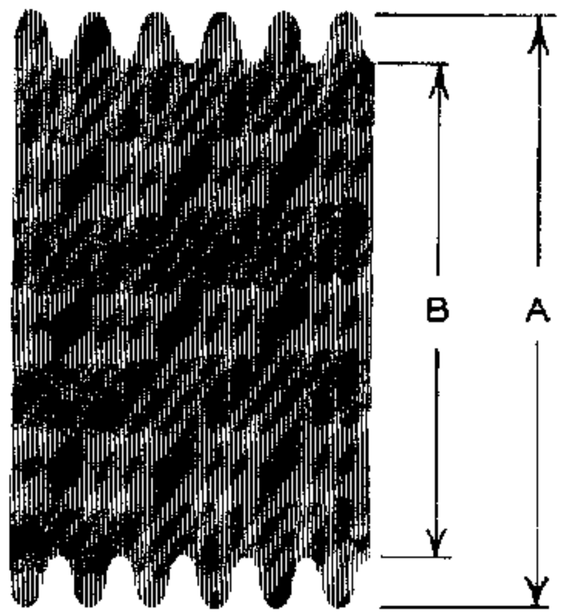

$$\frac{\text{WANTED}}{\text{UNWANTED}}\ (\text{RATIO IN DB}) = 20 \text{ LOG } \frac{A+B}{(A-B)}$$

SUPPRESSION IN DB	$\frac{A+B}{(A-B)}$
20	10
25	18
30	32
35	56
40	100

Figure 21

( ) Connect the audio output of the receiver to terminals 1 and 2 on the rear of the SB-10 and the receiver speaker to terminals 2 and 3. Make sure that if one side of the receiver audio output is grounded, that this lead is connected to terminal 2 on the SB-10.

( ) Tune in a fairly strong signal on the receiver and adjust the receiver gain for normal operating volume.

( ) Place the SB-10 function switch in VOX position. Do not turn on the transmitter plate power. With the transmitter sensitivity control in the same position as previously set, hold the microphone about 3 feet in front of the receiver speaker or close enough to start the VOX circuit cycling. Now advance the receiver sensitivity until the cycling ceases. This adjusts the anti-trip action for normal operation. Recheck for normal voice operation and readjust the transmitter sensitivity, if necessary.

( ) Turn off all power and disconnect all cables and wires from the adapter.

( ) Place the plastic control guards on the phase and balance controls.

( ) Insert the four small rubber feet in the four holes in the bottom of the cabinet.

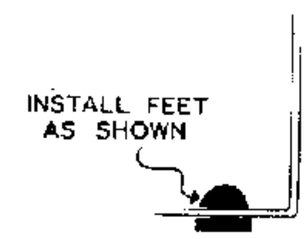

( ) Place the adapter in the cabinet and secure with two #6 sheet metal screws through the back panel into the two corresponding holes in the rear apron of the chassis.

( ) Place the adhesive label on the back of the cabinet above the opening for the rear chassis apron.

This completes testing and adjustment of the SB-10 SSB Adapter.

OPERATION

For on-the-air operation, the SB-10 connections are the same as described under Testing and Adjustment. Tuning and operating the transmitter and adapter is accomplished in the same manner as used during initial testing. Only one word of caution to the newcomer to SSB: Use audio gain sparingly to prevent splatter due to flat-topping.

In general, lower sideband (LSB) is used by most amateurs on the 80 and 40 meter bands while the upper sideband (USB) is used on 20, 15 and 10 meters. The "AM" position on the SB-10 mode switch produces a double sideband signal. Carrier may be inserted in any mode (USB and carrier, LSB and carrier, or DSB and carrier) by merely rotating either carrier null control from the balanced position. The resulting signals are all AM with the latter (DSB and carrier) being similar to a normal high level amplitude modulated carrier. However, when inserting carrier, be sure not to exceed the average plate dissipation of the final amplifier tubes. Thus, if carrier is inserted, the final amplifier should only be loaded to 100 watts input (125 ma). If considerable AM operation is at times desired, then a simple return to the normal high level capability of the companion transmitter is the logical choice, for the obvious reasons of increased efficiency and effectiveness.

The terminal strip on the rear of the SB-10 provides a capability for antenna relay operation, exciter keying, and receiver speaker muting as indicated on the rear apron label. Receiver speaker muting during SSB operation is generally preferred to placing the receiver in STANDBY. With modern coaxial relays and electronic TR switches, adequate protection against damage to the receiver RF stages due to overloading is afforded.

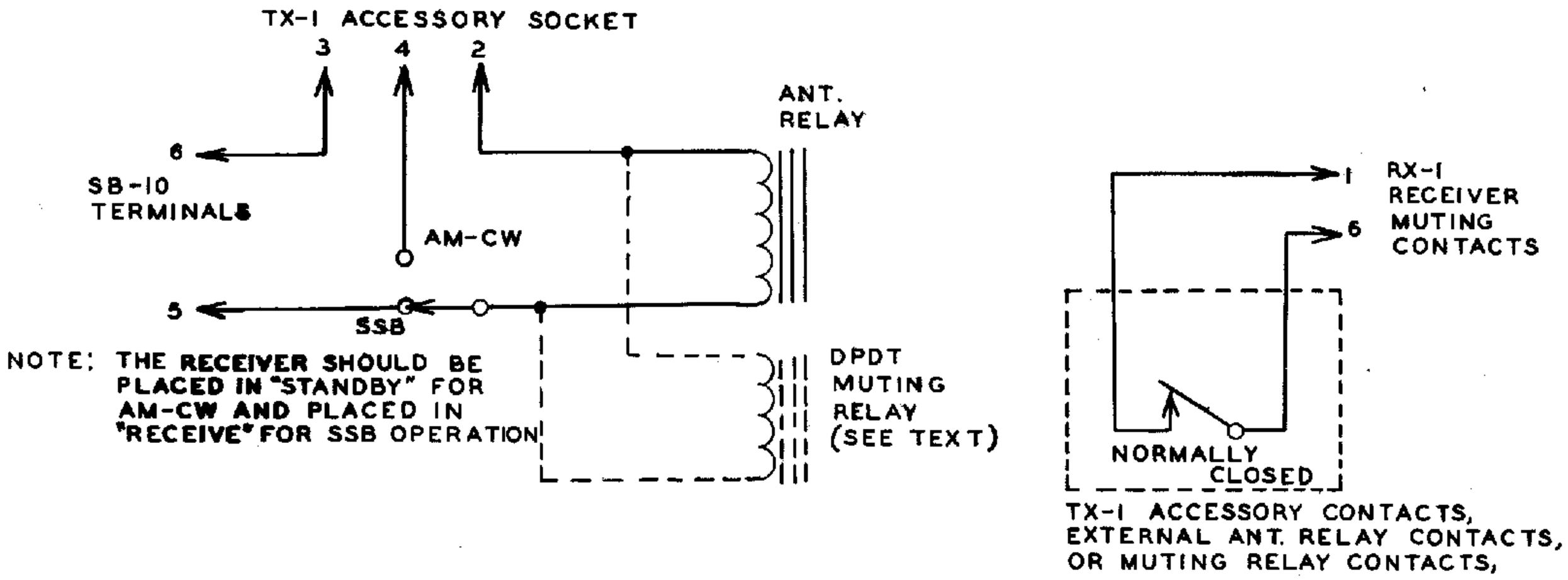

Figure 22

A suitable control circuit is shown in Figure 22 for switching of antenna relay and muting circuits between SSB and AM-CW. The receiver front panel muting switch is placed in STANDBY during AM-CW operation and in RECEIVE for SSB operation. Thus, full standby is used for AM-CW muting but speaker muting is employed for SSB duplex operation. An electronic TR switch may be used in place of the antenna relay, of course, but the circuitry illustrated may still be required to operate a muting relay in some installations. The necessity for the muting relay will depend upon whether or not an electronic TR switch is used, whether or not the coaxial relay has sufficient external contacts, and whether or not a "ground-when-transmit" connection must be provided, due to the grid block keying modification of either a DX-100 or DX-100B transmitter. If a TX-1 is used as the companion transmitter, no muting relay will be required, regardless of the type of antenna switching device employed.

Two methods may be employed to get on frequency before actually placing the transmitter on the air. The transmitter plate power must be left off during these procedures to avoid disturbing the "round-table" QSO so often encountered in SSB operation until the transmitter is on frequency and ready for break-in. One method merely involves properly tuning in the incoming SSB signal on the receiver and then "zero-beating" by merely pulling the plug from the key jack, or on the TX-1, depressing the SPOTTING pushbutton. Once the frequency is set, check to make sure the proper sideband (that of the incoming signal) is selected on the SB-10 and the transmitter is ready for break-in.

A second method involves, once again, properly tuning in the incoming signal on the receiver, selecting the proper sideband on the SB-10, and then talking yourself on frequency. This can be done by plugging a set of headphones into the receiver, placing the SB-10 function switch in manual position, and tuning the transmitter VFO for normal voice in the receiver.

Once the SB-10 is set up in the shack in operating position, it may be necessary to readjust either the transmitter sensitivity or receiver sensitivity controls, due to the change in position with regard to the receiver or due to acoustic differences. These controls can be readjusted in accordance with the procedure described under TESTING AND ADJUSTMENT to suit operating conditions.

If it is desired to increase or decrease the time required for the relay to open after the cessation of speech during VOX operation, the 2.2 megohm resistor between F7 and FF2 can be replaced with a different value. Increasing the resistance increases the time delay and decreasing the resistance decreases the time delay.

While the SB-10 was designed primarily for use with the Heathkit Models DX-100, DX-100B, and TX-1 as a complete SSB transmission capability, it can be used to excite higher power linear amplifiers by itself or in conjunction with the companion transmitter. Any grounded cathode linear amplifier requiring 10 watts PEP or less drive can be driven directly by the SB-10 and any grounded grid linear amplifier may be driven to full output with the SB-10 and TX-1 combination. When driving a linear amplifier directly with the SB-10, a companion transmitter must still be used to supply power and RF excitation at the fundamental frequency. However, under these conditions, a much lower power AM-CW transmitter may be used since the final amplifier of the companion transmitter would not be utilized. Care must be taken to observe the limitation of plate and filament power that such a transmitter would be capable of supplying to the SB-10. The use of a separate power supply for the SB-10, would be advisable under a condition such as this.

IN CASE OF DIFFICULTY

Mistakes in wiring are the most common cause of difficulty. Consequently, the first step is to recheck all wiring against the pictorials and schematic diagrams. Often having a friend check the wiring will locate an error consistently overlooked.

With miniature sockets, there is a possibility of shorts between adjacent socket terminals due to the close spacing. This should be checked and if any doubt exists, the terminals should be pried apart until obvious spacing can be seen between them.

Sometimes apparently good solder connections will have an insulating coating of rosin between the wire, the terminal, and the solder. This is often the case when insufficient heat was applied in soldering. An ohmmeter check of any questionable connections will test for this condition. All voltages should be "off" for such tests.

If the fuses in the transmitter blow consistently when the function switch is placed either in MANUAL or VOX, check the resistance to ground at pin 6 of the power plug with all power off and the function switch in MANUAL. A reading of about 100 KΩ should be obtained. A shorted filament lead will be revealed immediately by burning insulation on the affected lead plus failure of the tubes affected to light.

If some difficulty persists after the steps outlined have been completed, attempt to localize the trouble to a particular stage in the adapter citcuit. Be sure to re-read the circuit description on pages 7 and 8 so that "cause and effect" reasoning may be employed as the search for trouble progresses. Use the tuning procedure and the voltage chart on page 59 as a basis for localization and refer to the block diagram and schematic to visualize circuit relationships. The panel tuning meter will also aid in locating trouble.

If no SB-10 meter reading can be obtained under any condition, check the connecting coaxial cables for possible shorts plus the internal coaxial cable runs. Check the bandswitch wiring on all stages for errors or short circuits. Measure the voltages on the 6CL6 and 6BQ5 tubes to insure proper operation of these stages. Inspect the RF input connections on the balanced modulator sub-chassis.

Checking the RF input connections, RF phase shift networks, and balanced modulator voltages may require removal of the front panel and chassis apron. To remove same, remove the microphone connector and unsolder the center conductor, remove both the audio gain control and function switch, and remove all the front panel knobs. Now remove the four #6 sheet metal screws holding the front apron to the chassis and slide the panel and apron off the control shafts. Operation for test purposes with the front panel removed, is possible by providing a ground return to the chassis for the function switch and reconnecting the inner conductor of the microphone input cable to the connector.

VOLTAGE CHART

AREA	TUBE	PIN 1	PIN 2	PIN 3	PIN 4	PIN 5	PIN 6	PIN 7	PIN 8	PIN 9
BAL. MOD. DECK	"A"12AT7	270	0	3.2	0	0	270	0	3.2	6.3 VAC
	"B"12AT7	270	0	3.2	0	0	270	0	3.2	6.3 VAC
RF DECK	"A"6CL6	5.5	0	250	6.3 VAC	0	300	0	250	0
	"B"6BQ5	NC	0	7.8	6.3 VAC	0	NC	300	NC	250
AUDIO AND PHASING DECK	"A"12AX7	160	0	1	0	0	220	0	2.0	6.3 VAC
	"B"6AL5	0 to 0.1	-0.7	6.3 VAC	0	0 to 0.1	0	-0.7	0	0
	"C"12AT7	135	0	1.7	0	0	135	0	1.7	6.3 VAC
	"D"12AT7	300	0	3.2	0	0	300	0	3.2	6.3 VAC
	"F"12AT7	300	0	3.6	0	0	260	0 to 0.1	2.7 *8.4	6.3 VAC

Condition, unless otherwise specified, are as follows:

Input and output coaxial cables disconnected.
Function switch in "Manual".
Carrier null controls at mid-position.
All other controls full CCW.

Measurements taken with a Heathkit Model V-7A VTVM between pin and ground.

*With the function switch in "VOX".

NOTE: With the function switch in "VOX", all voltages on tubes on the Bal. Mod. and RF Decks will be zero with the exception of filament voltages.

Inspection of the RF phase shift networks and balanced modulator voltages may be called for if either the carrier or unwanted sideband suppression cannot be obtained. If the carrier is not suppressed with both carrier null controls in the middle third of their range, balanced modulator trouble should be assumed. Check for a bad 12AT7 in the balanced modulator, improper voltages, or wiring error. If unwanted sideband suppression cannot be obtained, check the RF phase shift network connections, especially the stacking and connection of the precision mica capacitors.

If unwanted sideband suppression is poor after the above checks, measure the two AC voltages at pins D1 and D6, with steady 1000 cps under signal input. They should be equal or it should be possible to make them equal by adjusting the audio balance control. When the two voltages are

equal, the audio balance control arm should be in the middle third of its range or a bad 12AT7, or wiring error, is indicated.

Another source of possible difficulty in obtaining unwanted sideband suppression is the audio phase shift network. The AC voltages at pins 5-1 and 3-7 of the audio phase shift network socket E should be in the ratio of 2 to 7 for a steady 1000 cps audio signal input. The lower voltage will appear on pins 3-7 and the ratio should be adjustable by rotation of the phase balance control. A more precise check for proper phase shift would be to feed the signal from D2 to the horizontal input and the signal from D7 to the vertical input of an oscilloscope and adjusting both vertical and horizontal oscilloscope gains for equal deflection. Adjusting the phase balance control, a perfect circle pattern on the scope should be obtained indicating exact 90° audio phase shift, providing the phase shifts in the horizontal and vertical oscilloscope circuits are equal.

The interstage and modulation transformers can be easily checked as a possible source of difficulty by measuring the DC resistance of the windings. The DC resistance of the primary of T4 is 650 Ω and the secondary is 40 Ω. Both T3 and T1 exhibit a primary DC resistance of 625 Ω and a secondary DC resistance of 850 Ω.

If no audio signal can apparently be passed through the audio stages, use a VTVM, signal tracer, or headset (capacitively coupled for safety) to apply normal audio trouble-shooting techniques. The audio circuitry is straight forward.

If the actual generated sideband is opposite to that indicated on the panel, after proper operation is obtained, reverse the transformer leads to lugs 7 and 8 of the sideband selector switch, RS.

Poor linearity in any adapter stage will be indicated by flattening or distorting of the transmitter RF output wave form obtained on an oscilloscope with the selector switch in AM position and a 1000 cps audio input. (This is the familiar "Two-Tone" test.) No indication of non-linearity should be apparent before rated output is obtained. Check the operating voltages, especially bias voltages, on all stages against the voltage chart. Also check the operating voltages on the final amplifier of the companion transmitter per the modification instructions given on page 50. Adjusting the loading of the final amplifier will also affect linearity and should be checked.

If the VOX and/or the anti-trip circuits appear to be inoperative, check the negative voltages produced at pin 2 of the 6AL5 socket B as follows: Turn the receiver sensitivity full CCW and the transmitter sensitivity full CW, and speak into the microphone. Note the maximum peak negative voltage which should be approximately -40 volts, depending on the microphone output voltage. Turn the transmitter sensitivity full CCW and the receiver sensitivity full CW. Connect the audio output of a receiver to terminals 1 and 2 on the rear of the SB-10 and adjust the gain for normal listening volume. Note the maximum peak negative voltage at B2, which should be approximately -90 volts, depending on the receiver volume. If either of these voltages is low or not present, check the corresponding triode amplifier connections and the 6AL5 connections. Also check for a bad tube at either of these locations. If the relay action is erratic, check the voltages at F8 against the voltage chart for the conditions listed. If the voltage is improper, check for an error in function switch wiring, a short in the voltage divider network, or a bad resistor.

If, after applying the information contained in this manual and your best efforts, you are still unable to obtain proper performance, it is suggested that you take advantage of the technical facilities which the Heath Company makes available to its customers.

The Technical Consultation Department is maintained for your benefit. This service is available to you at no charge. Its primary purpose is to provide assistance for those who encounter difficulty in the construction, operation or maintenance of HEATHKIT equipment. It is not intended, and is not equipped to function as a general source of technical information involving kit modifications nor anything other than the normal and specified performance of HEATHKIT equipment.

Although the Technical Consultants are familiar with all details of this kit, the effectiveness of their advice will depend entirely upon the amount and the accuracy of the information furnished by you. In a sense, YOU MUST QUALIFY for GOOD technical advice by helping the consultants to help you. Please use this outline:

1. Before writing, fully investigate each of the hints and suggestions listed in this manual under "IN CASE OF DIFFICULTY." Possibly it will not be necessary to write.

2. When writing, clearly describe the nature of the trouble and mention all associated equipment. Specifically report operating procedures, switch positions, connections to other units and anything else that might help to isolate the cause of trouble.

3. Report fully on the results obtained when testing the unit initially and when following the suggestions under "IN CASE OF DIFFICULTY." Be as specific as possible and include voltage readings if test equipment is available.

4. Identify the kit model number and date of purchase, if available. Also mention the date of the kit assembly manual. (Date at bottom of Page 1.)

5. Print or type your name and address, preferably in two places on the letter.

With the preceding information, the consultant will know exactly what kit you have, what you would like it to do for you and the difficulty you wish to correct. The date of purchase tells him whether or not engineering changes have been made since it was shipped to you. He will know what you have done in an effort to locate the cause of trouble and, thereby, avoid repetitious suggestions. In short, he will devote full time to the problem at hand, and through his familiarity with the kit, plus your accurate report, he will be able to give you a complete and helpful answer. If replacement parts are required, they will be shipped to you, subject to the terms of the Warranty.

The Factory Service facilities are also available to you, in case you are not familiar enough with electronics to provide our consultants with sufficient information on which to base a diagnosis of your difficulty, or in the event that you prefer to have the difficulty corrected in this manner. You may return the completed instrument to the Heath Company for inspection and necessary repairs and adjustments. You will be charged a minimal service fee, plus the price of any additional parts or material required. However, if the completed kit is returned within the Warranty period, parts charges will be governed by the terms of the Warranty. State the date of purchase, if possible.

Local Service by Authorized HEATHKIT Service Centers is also available in some areas and often will be your fastest, most efficient method of obtaining service for your HEATHKIT equipment. Although you may find charges for local service somewhat higher than for factory service, the amount of increase is usually offset by the transportation charge you would pay if you elected to return your kit to the Heath Company.

HEATHKIT Service Centers will honor the regular 90 day HEATHKIT Parts Warranty on all kits, whether purchased through a dealer or directly from Heath Company; however, it will be necessary that you verify the purchase date of your kit.

Under the conditions specified in the Warranty, replacement parts are supplied without charge; however, if the Service Center assists you in locating a defective part (or parts) in your kit, or installs a replacement part for you, you may be charged for this service.

HEATHKIT equipment purchased locally and returned to Heath Company for service must be accompanied by your copy of the dated sales receipt from your authorized HEATHKIT dealer in order to be eligible for parts replacement under the terms of the Warranty.

THIS SERVICE POLICY APPLIES ONLY TO COMPLETED EQUIPMENT CONSTRUCTED IN ACCORDANCE WITH THE INSTRUCTIONS AS STATED IN THE MANUAL. Equipment that has been modified in design will not be accepted for repair. If there is evidence of acid core solder or paste fluxes, the equipment will be returned NOT repaired.

For information regarding modification of HEATHKIT equipment for special applications, it is suggested that you refer to any one or more of the many publications that are available on all phases of electronics. They can be obtained at or through your local library, as well as at most electronic equipment stores. Although the Heath Company sincerely welcomes all comments and suggestions, it would be impossible to design, test, evaluate and assume responsibility for proposed circuit changes for special purposes. Therefore, such modifications must be made at the discretion of the kit builder, using information available from sources other than the Heath Company.

REPLACEMENTS

Material supplied with HEATHKIT products has been carefully selected to meet design requirements and ordinarily will fulfill its function without difficulty. Occasionally improper instrument operation can be traced to a faulty component. Should inspection reveal the necessity for replacement, write to the Heath Company and supply all of the following information.

A. Thoroughly identify the part in question by using the part number and description found in the manual Parts List.

B. Identify the type and model number of kit in which it is used.

C. Mention date of purchase.

D. Describe the nature of defect or reason for requesting replacement.

The Heath Company will promptly supply the necessary replacement. PLEASE DO NOT RETURN THE ORIGINAL COMPONENT UNTIL SPECIFICALLY REQUESTED TO DO SO. Do not dismantle the component in question as this will void the guarantee. This replacement policy does not cover the free replacement of parts that may have been broken or damaged through carelessness on the part of the kit builder.

SHIPPING INSTRUCTIONS

In the event that your instrument must be returned for service, these instructions should be carefully followed.

ATTACH A TAG TO THE EQUIPMENT BEARING YOUR NAME, COMPLETE ADDRESS, DATE OF PURCHASE, AND A BRIEF DESCRIPTION OF THE DIFFICULTY ENCOUNTERED. Wrap the equipment in heavy paper, exercising care to prevent damage. Place the wrapped equipment in a stout carton of such size that at least three inches of shredded paper, excelsior, or other resilient packing material can be placed between all sides of the wrapped equipment and the carton. Close and seal the carton with gummed paper tape, or alternately, tie securely with stout cord. Clearly print the address on the carton as follows:

To: HEATH COMPANY
Benton Harbor, Michigan

Include your name and return address on the outside of the carton. Preferably affix one or more "Fragile" or "Handle With Care" labels to the carton, or otherwise so mark with a crayon of bright color. Ship by insured parcel post or prepaid express; note that a carrier cannot be held responsible for damage in transit if, in HIS OPINION, the article is inadequately packed for shipment.

PARTS LIST

PART No.	PARTS Per Kit	DESCRIPTION
Resistors		
1-4	1	330 Ω 1/2 watt
1-7	1	680 Ω 1/2 watt
1-9	3	1 KΩ 1/2 watt
1-14	1	3.3 KΩ 1/2 watt
1-21	5	15 KΩ 1/2 watt
1-23	1	27 KΩ 1/2 watt
1-26	8	100 KΩ 1/2 watt
1-35	1	1 megohm 1/2 watt
1-37	3	2.2 megohm 1/2 watt
1-45	2	220 Ω 1/2 watt
1-86	1	5.6 megohm 1/2 watt
1-103	1	33 Ω 1/2 watt
1-9A	2	10 KΩ 1 watt
1-11A	1	10 Ω 1 watt
1-18A	2	150 Ω 1 watt
1-23A	1	2.2 KΩ 1 watt
1-13B	1	220 Ω 2 watt
1-14B	2	1.5 KΩ 2 watt
1-24B	1	100 KΩ 2 watt
2-44A	2	50 Ω 1/2% precision

PART No.	PARTS Per Kit	DESCRIPTION
Capacitors		
20-11	4	100 mmf mica
20-31	1	68 mmf mica
20-89	2	817 mmf 1% silver mica
20-90	2	439 mmf 1% silver mica
20-91	2	223 mmf 1% silver mica
20-92	2	150 mmf 1% silver mica
20-93	2	110 mmf 1% silver mica
21-9	1	100 mmf disc ceramic
21-14	5	.001 mfd disc ceramic
21-16	13	.01 mfd disc ceramic
21-27	2	.005 mfd disc ceramic
21-33	1	3.3 mmf disc ceramic
23-28	2	.1 mfd tubular
25-16	1	20 mfd 350 V electrolytic
25-35	1	2 mfd 50 V electrolytic
26-22	1	75 mmf variable
26-46	1	50-50 mmf butterfly

PART No.	PARTS Per Kit	DESCRIPTION
Coils-Chokes-Transformers		
40-122	1	Coil and two wafer assembly
40-123	1	80 meter driver coil
40-124	1	40 meter driver coil
40-125	1	20 meter driver coil
40-126	1	15 meter driver coil
40-127	1	10 meter driver coil
40-128	1	Coil and one wafer assembly
45-3	2	1 mh RF choke
45-4	1	1.1 mh RF choke
45-14	1	2.5 mh RF choke
45-19	1	Parasitic choke
45-30	4	500 μh RF choke
51-3	1	Anti-trip transformer
51-37	1	Interstage transformer
51-38	2	Modulation transformer
Socket-Terminal Strips-Knobs-Connectors		
431-2	3	2-lug terminal strip-no gnd
431-3	1	3-lug terminal strip-no gnd
431-5	1	4-lug terminal strip-no gnd
431-7	1	6-lug screw terminal strip
431-10	5	3-lug terminal strip - center gnd
431-14	3	2-lug terminal strip-rh gnd
431-16	1	2-lug terminal strip-lh gnd
432-3	1	Microphone connector
434-4	1	Octal socket (ring mount)
434-34	1	7 pin miniature socket
434-36	4	9 pin shielded miniature ceramic socket
434-39	1	Octal socket
434-43	2	9 pin shielded miniature socket
434-56	2	9 pin miniature socket
436-5	2	Female coax connector
438-3	1	Phone plug
438-6	2	Octal plug
438-9	4	Male coax connector
462-30	2	Knob - 1/2" plastic
462-129	5	Knob-aluminum 1 1/4" dia.
462-130	3	Knob-aluminum 9/16" dia.
Hardware		
250-8	20	#6 sheet metal screw
250-9	1	6-32 x 3/8" RHMS
250-16	2	8-32 x 1/8" setscrew
250-31	18	6-32 x 1/4" RHMS
250-93	5	8-32 x 1/4" Allen head setscrew
250-49	26	3-48 x 1/4" BHMS
250-105	3	8-32 x 1/8" Allen head setscrew
252-1	26	3-48 nut
252-3	18	6-32 nut

PART No.	PARTS Per Kit	DESCRIPTION
Hardware (Cont'd.)		
252-7	16	3/8" control nut
253-1	1	#6 fiber washer
253-10	10	Control washer
253-22	3	3/8" ID x 1/8" thick washer
254-1	12	#6 lockwasher
254-4	11	3/8" lockwasher
254-7	26	#3 lockwasher
259-1	4	#6 solder lug
259-2	2	#8 solder lug
259-6	6	#6 (small) solder lug
259-10	6	3/8" control solder lug
259-11	2	Terminal spade lug
Controls-Switches		
10-15	2	500 KΩ control
10-46	1	100 KΩ control
11-22	2	500 Ω wire-wound control
63-53	1	3 position switch
63-157	1	Sideband reversing switch
63-158	1	Band switch
B11-33	2	1000 Ω control
Meters-Tubes		
407-54	1	Meter, 200 μa
411-24	5	12AT7 tube
411-26	1	12AX7 tube
411-40	1	6AL5 tube
411-63	1	6CL6 tube
411-108	1	EL84/6BQ5 tube
Sheet Metal Parts		
200-M142	1	Phasing and audio chassis
200-M143	1	Balanced modulator subchassis
200-M144	1	RF subchassis
202-M17	1	Front chassis apron
202-M18	1	Rear chassis apron
203-136F175	1	Front panel
204-M147	2	Reinforcement brackets
Miscellaneous		
56-4	1	Diode
69-6	1	5 pole D. T. telephone relay
73-1	3	3/8" rubber grommet
73-4	4	5/16" rubber grommet
84-10	1	Audio phase shift network
90-75	1	Cabinet
100-110	1	Audio wire harness
100-111	1	Function control wire harness
205-M87	2	9 pin socket shield
206-3	4	Tube shield
206-54	1	9 pin 2 3/8" tube shield

PART No.	PARTS Per Kit	DESCRIPTION
Miscellaneous (Cont'd.)		
252-20	2	Plastic control guard
261-4	4	Rubber feet
340-2	1	length #20 bare wire
340-3	1	length #16 bare wire
343-2	1	length RG58A/U coax
343-3	1	length shielded wire
344-1	1	length hookup wire
346-1	1	length insulating sleeving
346-2	1	length plastic sleeving
347-9	1	length 3 wire shielded cable

PART No.	PARTS Per Kit	DESCRIPTION
Miscellaneous (Cont'd.)		
390-53	1	Adhesive label
391-7	1	"Heathkit" nameplate
435-1	1	Octal plug ring
438-12	4	Coax adapter insert
440-1	2	Octal plug and socket cap
453-18	1	1/4" x 6 11/16" shaft extension
455-6	5	Panel bushing
456-4	1	1/4" shaft coupling-insulated
490-6	1	5/64" Allen wrench
331-6		Solder
595-201	1	Manual

SPECIFICATION CHANGES

All prices are subject to change without notice. The Heath Company reserves the right to discontinue instruments and to change specifications at any time without incurring any obligation to incorporate new features in instruments previously sold.

WARRANTY

Heath Company warrants that for a period of three months from the date of shipment, all Heathkit parts shall be free of defects in materials and workmanship under normal use and service and that in fulfillment of any breach of such warranty, Heath Company shall replace such defective parts upon the return of the same to its factory. The foregoing warranty shall apply only to the original buyer, and is and shall be in lieu of all other warranties, whether express or implied and of all other obligations or liabilities on the part of Heath Company and in no event shall Heath Company be liable for any anticipated profits, consequential damages, loss of time or other losses incurred by the buyer in connection with the purchase, assembly or operation of Heathkits or components thereof. No replacement shall be made of parts damaged by the buyer in the course of handling or assembling Heathkit equipment.

NOTE: The foregoing warranty is completely void and we will not replace, repair or service instruments or parts thereof in which acid core solder or paste fluxes have been used.

HEATH COMPANY

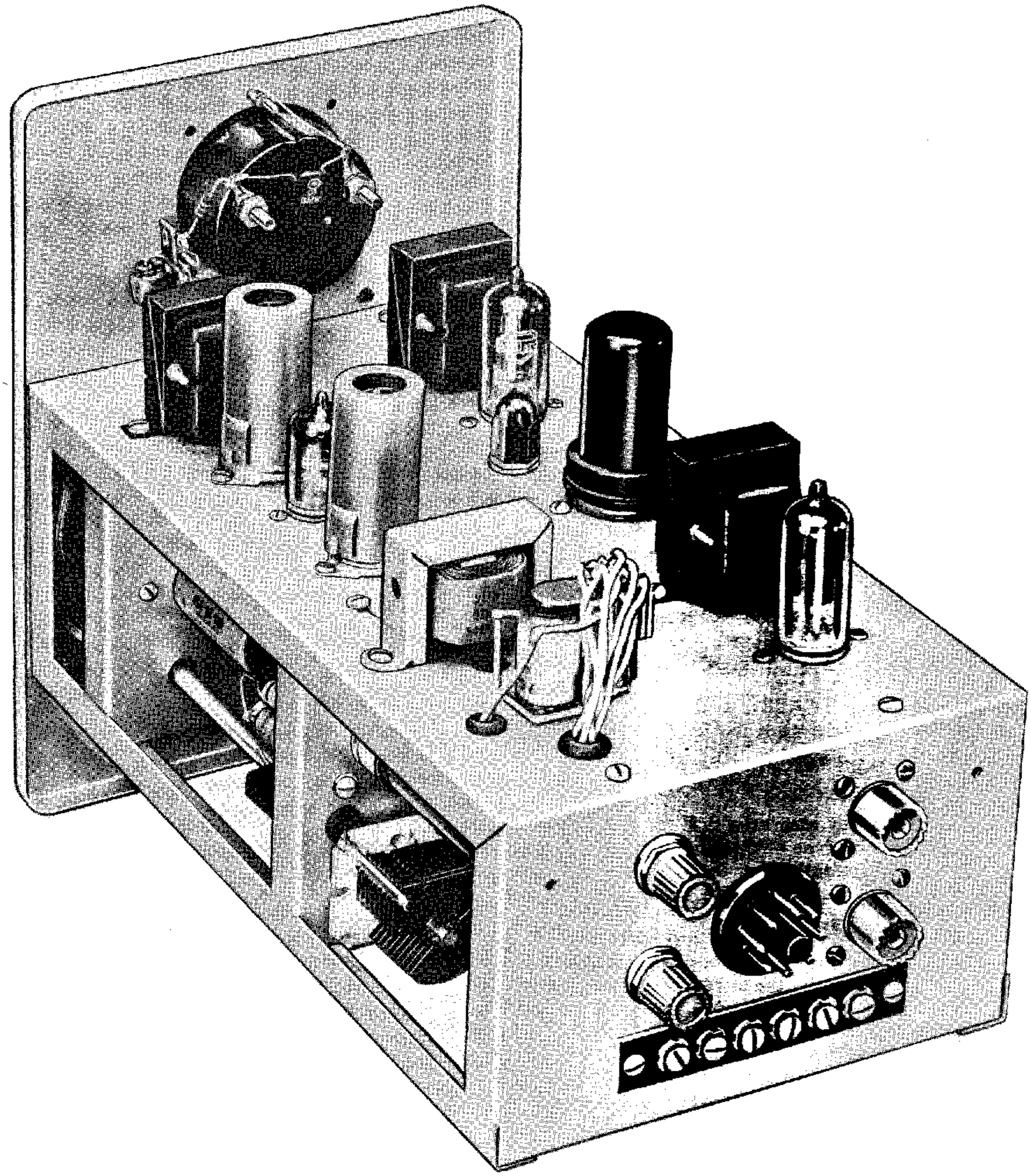

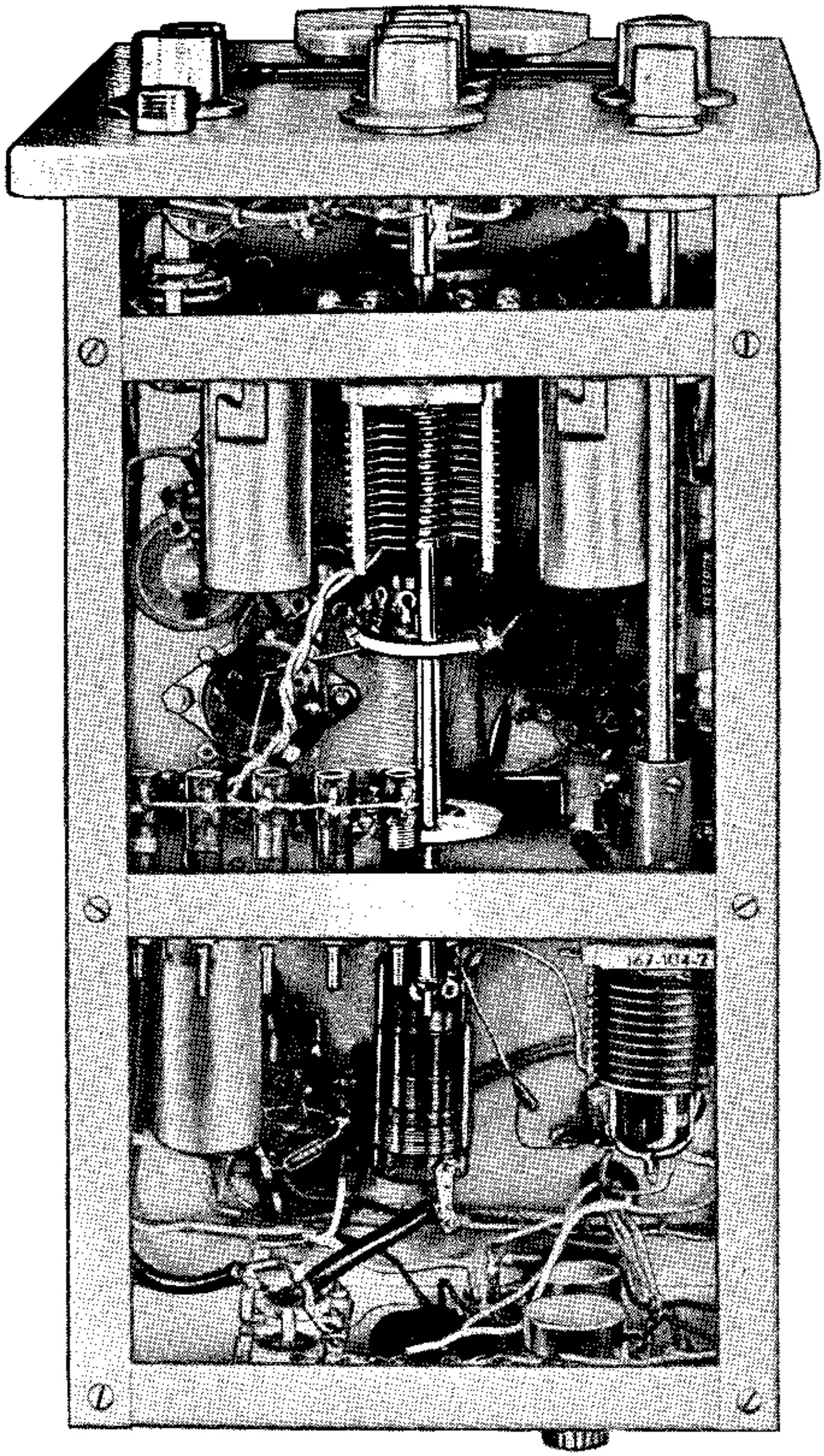

The output of the vox voltage amplifier is capacitively coupled to the plate of one section of a 6AL5 dual diode and the output of the anti-trip voltage amplifier is capacitively coupled to the cathode of the second 6AL5 diode.

The audio output alternating current voltage which is developed in the anti-trip voltage amplifier is then rectified and appears as a negative potential at the plate of the other 6AL5 diode. The diode will not conduct when so biased. Therefore, the relay control tube (1/2 of a 12AT7) remains cut-off by the fixed bias applied to the cathode by the voltage divider network.

From this "Anti-Trip" action, it can be seen that for the relay to be tripped, it will be necessary to upset the negative voltage at the plate of the diode, thus allowing it to conduct and place sufficient positive voltage on the grid of the relay control tube to overcome the fixed cutoff cathode bias. This positive "upsetting" voltage is developed in the speech and vox amplifier stages and originates at the microphone. Thus, with proper setting of the sensitivity controls, speaking into the microphone trips the relay by overcoming the receiver anti-trip bias, but receiver audio entering the microphone will not trip the relay due to "in phase bias" developed by the anti-trip circuit.

A capacitor resistor network charges and discharges across the grid of the control tube to introduce the necessary time delay after speech is discontinued.

A cathode bias voltage divider network on the relay control tube is switched in or out for a selection of voice control or manual operation. In standby position, B+ is removed from all circuits.

BALANCED MODULATOR CIRCUITRY

The input circuit to the pair of balanced modulators consists of a broadband RF Phase Shift network of the passive type. An entirely different network to provide the proper phase shift at each fundamental input frequency is switched in on each band. This design feature permits operation on all frequencies in the particular band desired without the necessity of continual adjustment, but still maintains a very high degree of precision in the RF Phase Shift network. The network is capacitively coupled to the balanced modulator grids. The cathodes of the balanced modulators are returned to ground through 1000Ω tube balancing or carrier null controls which are adjusted from the front panel. The plates of the tubes are tuned to the operating frequency with a multiband coil and capacitor circuit.

The modulation voltage developed in the AF modulator is coupled through two 1:1 ratio transformers to the balanced modulator grids. A sideband selector switch is connected in the output leads of the transformers which applies the audio voltage in the proper phase relationships to obtain upper, lower, or double sideband (AM) operation. The RF voltage is isolated from the audio network by the use of four 500 microhenry chokes to couple the audio to the grids of the balanced modulators.

DRIVER AND RF AMPLIFIER CIRCUITRY

A 6CL6 tube is employed as a Class A driver stage. The excellent linear capabilities of the 6CL6 as a Class A amplifier lends itself perfectly to this application. The grid of the 6CL6 is coupled through a capacitor to a link on the balanced modulator output coil. Bandswitch selected, broadband, slug tuned coils are used for tuning the driver output circuit.

The output circuit of the driver stage is coupled to the grid of the 6BQ5 tube. This stage is also operating in Class A service and is easily driven to maximum output while maintaining excellent linearity.

The plate circuit is shunt fed and couples to an all-band Pi network output circuit. The plate circuit also furnishes a sample of RF voltage to operate the meter for the purpose of tuning the adapter.

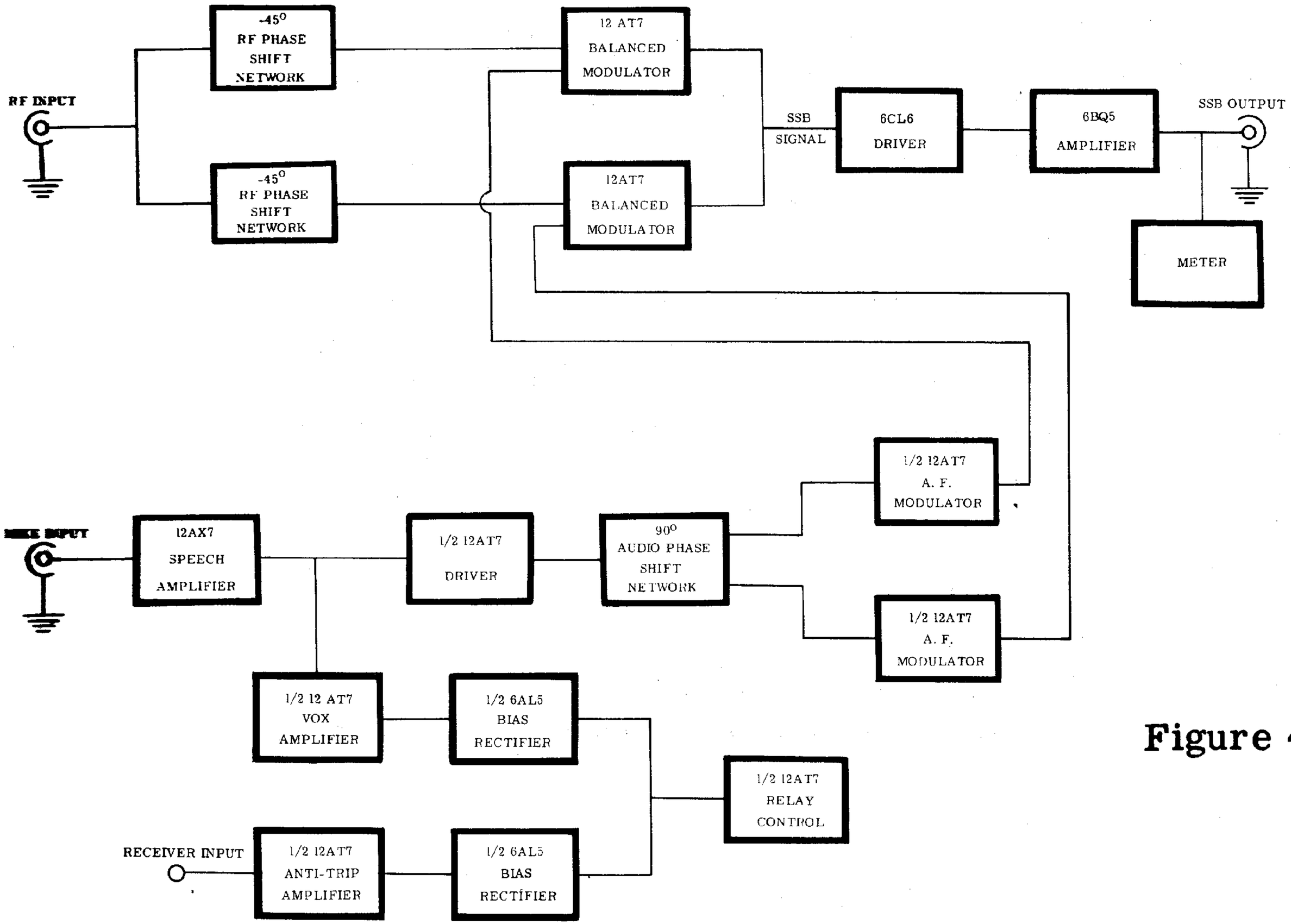

Figure 4

SB-10 BLOCK DIAGRAM

BIASING CIRCUITRY

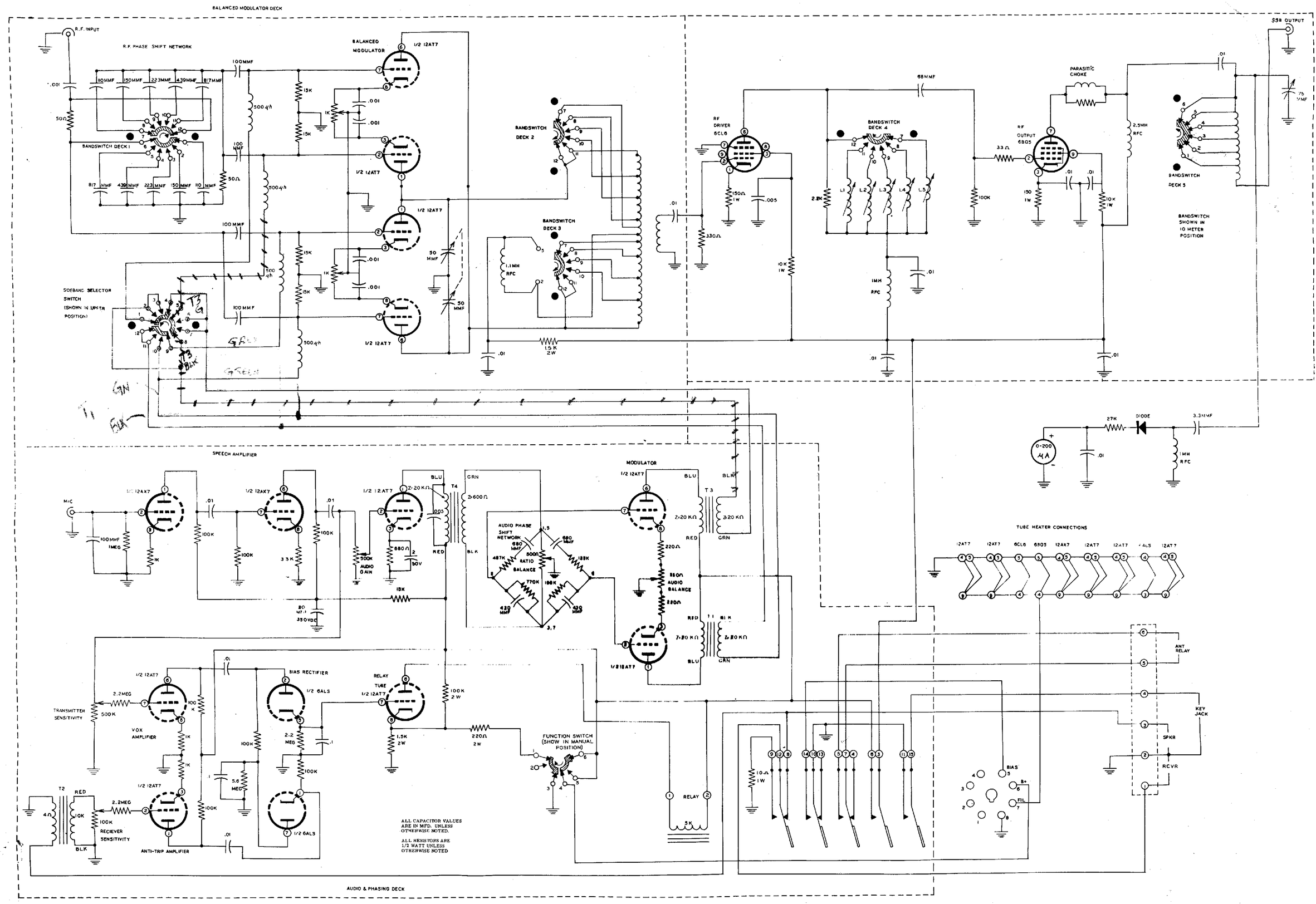

SCHEMATIC
HEATHKIT SINGLE SIDEBAND ADAPTER
MODEL SB-10