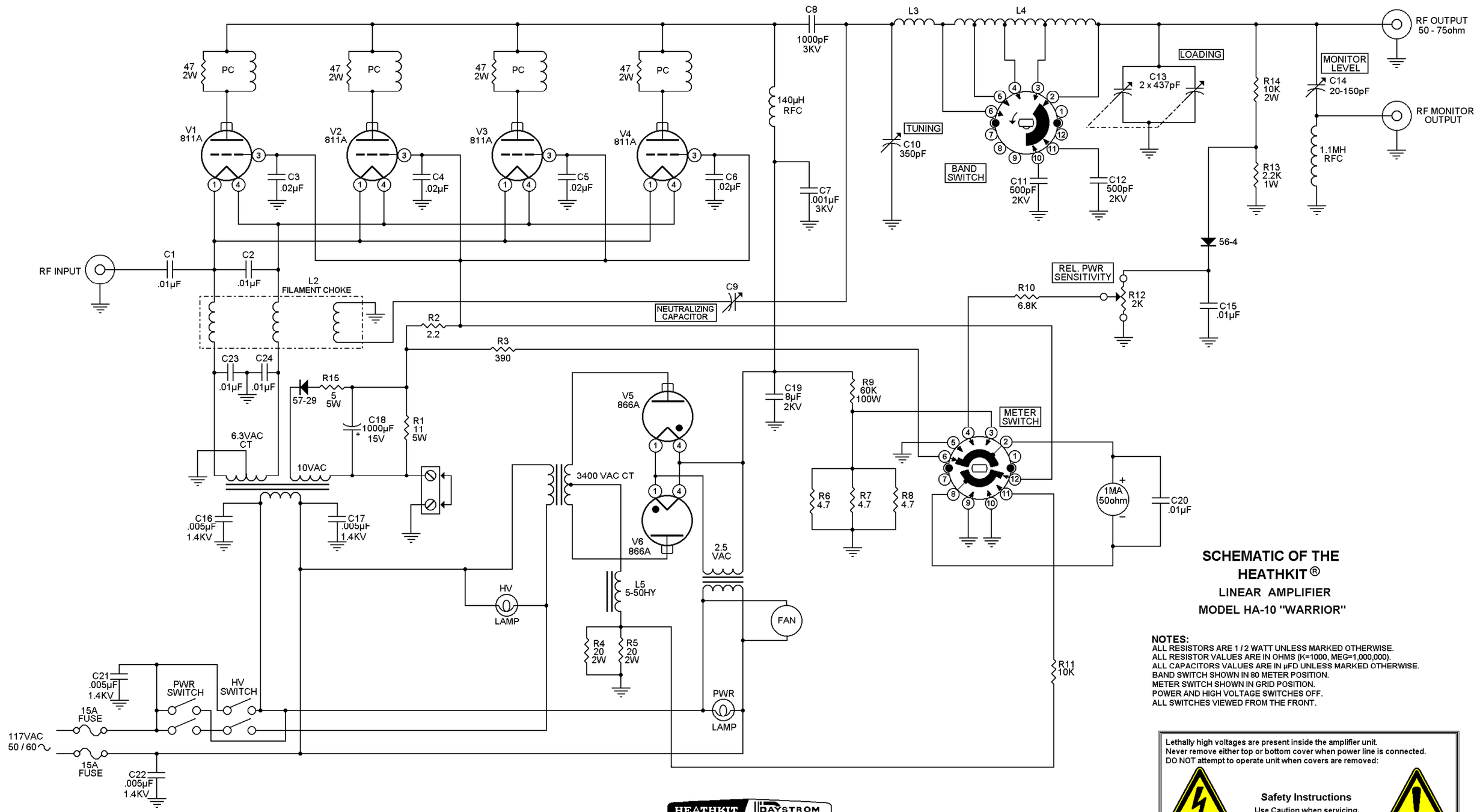

SCHEMATIC OF THE HEATHKIT®

LINEAR AMPLIFIER

MODEL HA-10 "WARRIOR"

NOTES:

ALL RESISTORS ARE 1 / 2 WATT UNLESS MARKED OTHERWISE.
ALL RESISTOR VALUES ARE IN OHMS (K=1000, MEG=1,000,000).
ALL CAPACITORS VALUES ARE IN µFD UNLESS MARKED OTHERWISE.
BAND SWITCH SHOWN IN 80 METER POSITION.
METER SWITCH SHOWN IN GRID POSITION.
POWER AND HIGH VOLTAGE SWITCHES OFF.
ALL SWITCHES VIEWED FROM THE FRONT.

HEATHKIT DAYSTROM

KLOWATT LINEAR AMPLIFIER
MODEL HA-10

Lethally high voltages are present inside the amplifier unit.
Never remove either top or bottom cover when power line is connected.
DO NOT attempt to operate unit when covers are removed:

Safety Instructions

Use Caution when servicing.

Disclaimer:
Although the greatest care has been taken while compiling these documents, we cannot guarantee that the information is 100% correct.
Copyright © 2004 B. Bolin

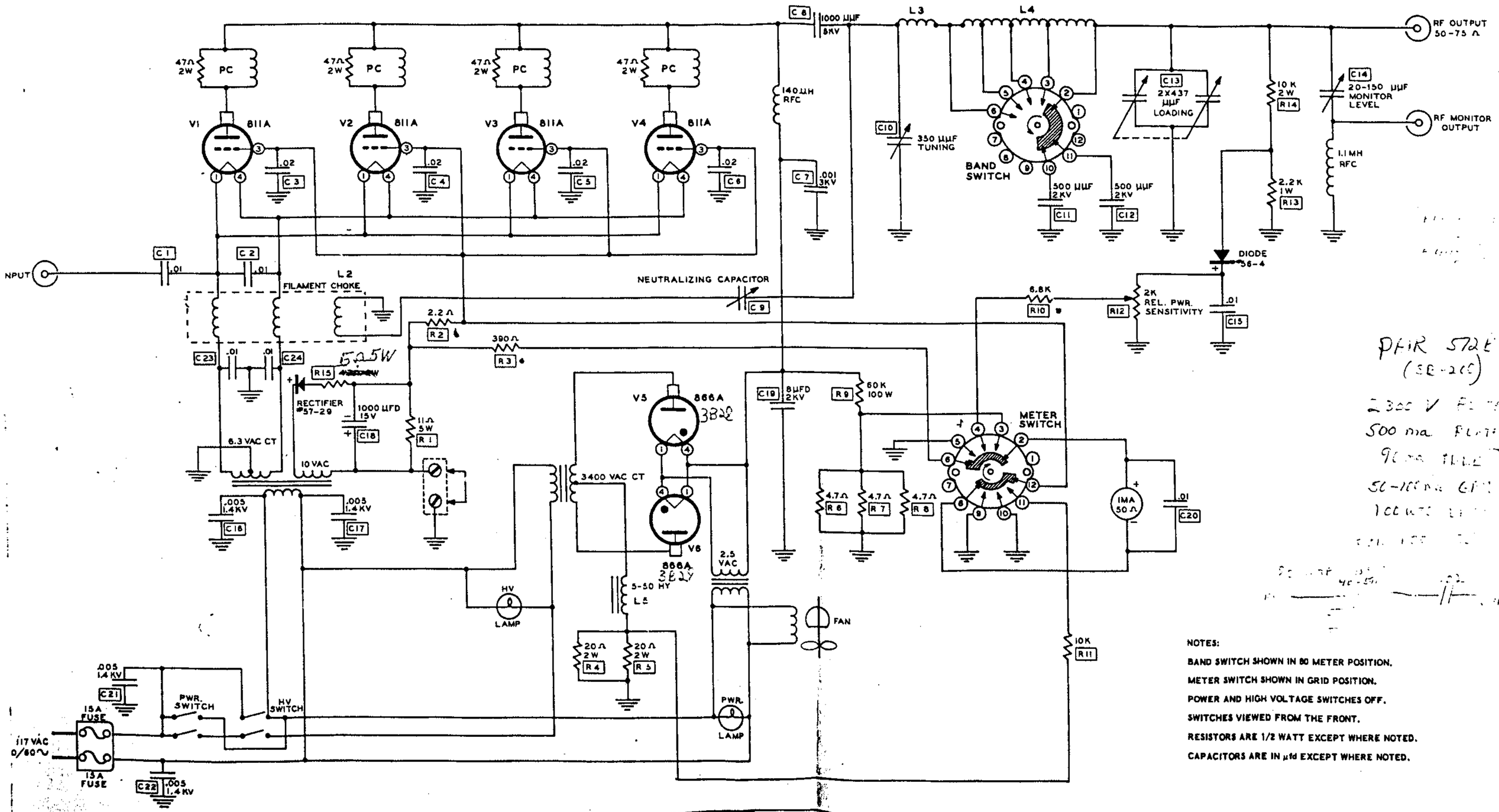

NOTES:

BAND SWITCH SHOWN IN 80 METER POSITION.

METER SWITCH SHOWN IN GRID POSITION.

POWER AND HIGH VOLTAGE SWITCHES OFF.

SWITCHES VIEWED FROM THE FRONT.

RESISTORS ARE 1/2 WATT EXCEPT WHERE NOTED.

CAPACITORS ARE IN µfd EXCEPT WHERE NOTED.

HEATHKIT DAYSTROM

KILOWATT LINEAR AMPLIFIER

MODEL HA-10