Kawasaki

ZL900
ZL1000

Motorcycle Service Manual Supplement

Kawasaki

Eliminator

Motorcycle Service Manual Supplement

Quick Reference Guide

This quick reference guide will assist you in locating a desired topic or procedure.

- Bend the pages back to match the black tab of the desired chapter number with the black tab on the edge at each table of contents page.
- Refer to the sectional table of contents for the exact pages to locate the specific topic required.

Kawasaki

ZL900
ZL1000

Motorcycle Service Manual Supplement

Second Edition ① : Mar. 18, 1986 ①

LIST OF ABBREVIATIONS

A	ampere(s)
ABDC	after bottom dead center
AC	alternating current
ATDC	after top dead center
BBDC	before bottom dead center
BDC	bottom dead center
BTDC	before top dead center
°C	degree(s) Celcius
DC	direct current
F	farad(s)
°F	degree(s) Fahrenheit
ft	foot, feet
g	gram(s)
h	hour(s)
lb	pound(s)
m	meter(s)
min	minute(s)
N	newton(s)
Pa	pascal(s)
PS	horsepower
psi	pound(s) per square inch
r	revolution
rpm	revolution(s) per minute
TDC	top dead center
TIR	total indicator reading
V	volt(s)
W	watt(s)
Ω	ohm(s)

Read OWNER'S MANUAL before operating.

Foreword

This Service Manual Supplement is designed to be used in conjunction with ZX900 Motorcycle Service Manual (P/N 99924-1048-01). The maintenance and repair procedures described in this supplement are only those that are unique to the models listed on the back cover. Most service operations for these models remain identical to those described in the base Service Manual. Complete and proper servicing of the models listed on the back cover there for requires both this supplement and the base Service Manual.

The base Service Manual and this Supplement are designed primarily for use by motorcycle mechanics in a properly equipped shop. However, they contain enough detail and basic information to make them useful to the operator who desires to perform his own basic maintenance and repair work. A basic knowledge of mechanics, the proper use of tools, and work shop procedures must be understood in order to carry out maintenance and repair satisfactorily. Whenever the operator has insufficient experience or doubts his ability to do the work, the adjustments, maintenance, and repair should be carried out only by qualified mechanics.

In order to perform the work efficiently and to avoid costly mistakes, the mechanic should read the text, thoroughly familiarize himself with the procedures before starting work, and then do the work carefully in a clean area. Whenever special tools and equipment are specified, makeshift tools or equipment should not be used. Precision measurements can only be made if the proper instruments are used, and the use of substitute tools may adversely affect safe operation of the motorcycle.

How to Use this Manual

In preparing this manual, we divided the product into its major systems. These systems became the manual's chapters. All information for a particular system from adjustment through disassembly and inspection is located in a single chapter.

The Quick Reference Guide shows you all of the product's system and assists in locating their chapters. Each chapter in turn has its own comprehensive Table of Contents.

The Periodic Maintenance Chart is located in the General Information chapter. The chart gives a time schedule for required maintenance operations.

If you want spark plug information, for example, go to the Periodic Maintenance Chart first. The chart tells you how frequently to clean and gap the plug. Next, use the Quick Reference Guide to locate the Electrical System chapter. Then, use the Table of Contents on the first page of the chapter to find the Spark Plug section.

Whenever you see these WARNING and CAUTION symbols, heed their instructions! Always follow safe operating and maintenance practices.

WARNING

○**This warning symbol identifies special instructions or procedures which, if not correctly followed, could result in personal injury, or loss of life.**

CAUTION

○**This caution symbol identifies special instructions or procedures which, if not strictly served, could result in damage to or destruction of equipment.**

This manual contains five more symbols (in addition to WARNING and CAUTION) which will help you distinguish different types of information.

NOTE

○*This note symbol indicates points of particular interest for more efficient and convenient operation.*

- ● Indicates a procedural step or work to be done.
- ○ Indicates a procedural sub-step or how to do the work of the procedural step it follows. It also precedes the text of a WARNING, CAUTION, or NOTE.
- ★ Indicates a conditional step or what action to take based on the results of the test or inspection in the procedural step or sub-step it follows.
- ☆ Indicates a conditional sub-step or what action to take based upon the results of the conditional step it follows.

In most chapters an exploded view illustration of the system components follows the Table of Contents. In these illustrations you will find the instructions indicating which parts require specified tightening torque, oil, grease or a locking agent during assembly.

General Information

Table of Contents

1-2 GENERAL INFORMATION

Before Servicing

Before starting to service a motorcycle, careful reading of the applicable section is recommended to eliminate unnecessary work. Photographs, diagrams, notes, cautions, warnings, and detailed descriptions have been included wherever necessary. Nevertheless, even a detailed account has limitations, and a certain amount of basic knowledge is also required for successful work.

Especially note the following:

(1) Dirt

Before removal and disassembly, clean the motorcycle. Any dirt entering the engine or other parts will work as an abrasive and shorten the life of the motorcycle. For the same reason, before installing a new part, clean off any dust or metal filings.

(2) Battery Ground

Remove the ground (–) lead from the battery before performing any disassembly operations. This prevents:

(a) the possibility of accidentally turning the engine over while partially disassembled.

(b) sparks at electrical connections which will occur when they are disconnected.

(c) damage to electrical parts.

(3) Tightening Sequence

Generally, when installing a part with several bolts, nuts, or screws, start them all in their holes and tighten them to snug fit. Then tighten them evenly in a cross pattern. This is to avoid distortion of the part and/or causing gas or oil leakage. Conversely when loosening the bolts, nuts, or screws, first loosen all of them by about a quarter of turn and then remove them.

Where there is a tightening sequence indication in this Service Manual, the bolts, nuts, or screws must be tightened in the order and method indicated.

(4) Torque

When torque values are given in this Service Manual , use them. Either too little or too much torque may lead to serious damage. Use a good quality, reliable torque wrench.

(5) Force

Common sense should dictate how much force is necessary in assembly and disassembly. If a part seems especially difficult to remove or install, stop and examine what may be causing the problem. Whenever tapping is necessary, tap lightly using a wooden or plastic-faced mallet. Use an impact driver for screws (particularly for the removal of screws held by a locking agent) in order to avoid damaging the screw heads.

(6) Edges

Watch for sharp edges, especially during major engine disassembly and assembly. Protect your hands with gloves or a piece of thick cloth when lifting the engine or turning it over.

(7) High Flash-point Solvent

A high flash-point solvent is recommended to reduce fire danger. A commercial solvent commonly available in North America is Stoddard solvent (generic name). Always follow manufacturer and container directions regarding the use of any solvent.

(8) Gasket, O-Ring

Do not reuse a gasket or O-ring once it has been in service. The mating surfaces around the gasket should be free of foreign matter and perfectly smooth to avoid oil or compression leaks.

(9) Liquid Gasket, Non-permanent Locking Agent

Follow manufacturer's directions for cleaning and preparing surfaces where these compounds will be used. Apply sparingly. Excessive amounts may block engine oil passages and cause serious damage. An example of a non-permanent locking agent commonly available in North America is Loctite Lock'n Seal (Blue).

(10) Press

A part installed using a press or driver, such as a wheel bearing, should first be coated with oil on its outer or inner circumference so that it will go into place smoothly.

(11) Ball Bearing

When installing a ball bearing, the bearing race which is affected by friction should be pushed by a suitable driver. This prevents severe stress on the balls and races, and prevents races and balls from being dented. Press a ball bearing until it stops at the stop in the hole or on the shaft.

(12) Oil Seal and Grease Seal

Replace any oil or grease seals that were removed with new ones, as removal generally damages seals.

When pressing in a seal which has manufacturer's marks, press it in with the marks facing out.

Seals should be pressed into place using a suitable driver, which evenly contacts the side of seal, until the face of the seal is even with the end of the hole.

(13) Seal Guide

A seal guide is required for certain oil or grease seals during installation to avoid damage to the seal lips. Before a shaft passes through a seal, apply a little high temperature grease to the seal lips to reduce rubber to metal friction.

(14) Circlip, Retaining Ring

Replace any circlips and retaining rings that are removed with new ones, as removal weakens and deforms them. When installing circlips and retaining rings, take care to compress or expand them only enough to install them and no more.

(15) Lubrication

Engine wear is generally at its maximum while the engine is warming up and before all the rubbing surfaces have an adequate lubricative film. During assembly, oil or grease (whichever is more suitable) should be applied to any rubbing surface which has lost its lubricative film. Old grease and dirty oil should be cleaned off. Deteriorated grease has lost its lubricative quality and may contain abrasive foreign particles.

Don't use just any oil or grease. Some oils and greases in particular should be used only in certain applications and may be harmful if used in an application for which they are not intended. This manual makes reference to molybdenum disulfide grease (MoS_2) in the assembly of certain engine and chassis parts. Always check manufacturer recommendations before using such special lubricants.

(16) Electrical Wires

All the electrical wires are either single-color or two-color and, with only a few exceptions, must be connected to wires of the same color. On any of the two-color wires there is a greater amount of one color and a lesser amount of a second color, so a two-color wire is identified by first the primary color and then the secondary color. For example, a yellow wire with thin red stripes is referred to as a "yellow/red" wire; it would be a "red/yellow" wire if the colors were reversed to make red the main color.

Wire (cross-section)	Name of Wire Color	Picture in Wiring Diagram
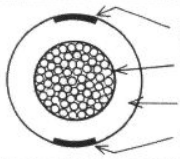	Yellow/red	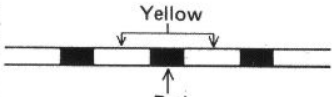

(17) Replacement Parts

When there is a replacement instruction, replace these parts with new ones every time they are removed. These replacement parts will be damaged or lose their original function once removed.

(18) Inspection

When parts have been disassembled, visually inspect these parts for following conditions or other damage. If there is any doubt as to the condition of them, replace them with new ones.

Abrasion	Denting	Hardening	Warping
Bending	Deterioration	Scratching	Wear
Cracking	Discoloration	Seizure	

(19) Service Data

Numbers of service data in this text have following meanings:

"Standards": show dimensions or performances which brand-new parts or systems have.

"Service Limits": indicate the usable limits. If the measurement shows excessive wear or deteriorated performance, replace the damaged parts.

Model Identification

ZL900-A1 Right Side View:

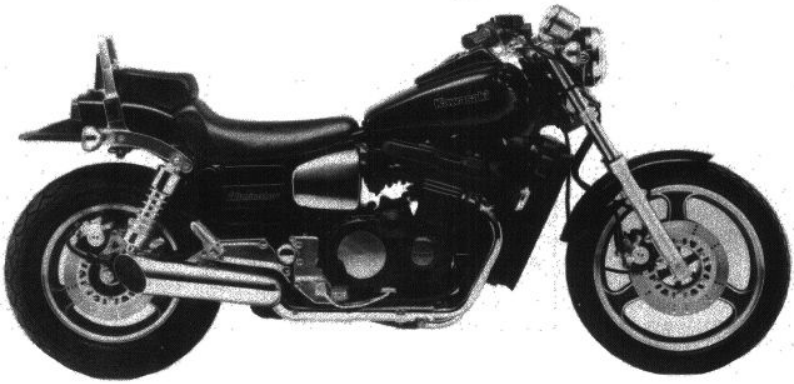

• ZL900-A2 Right Side View:

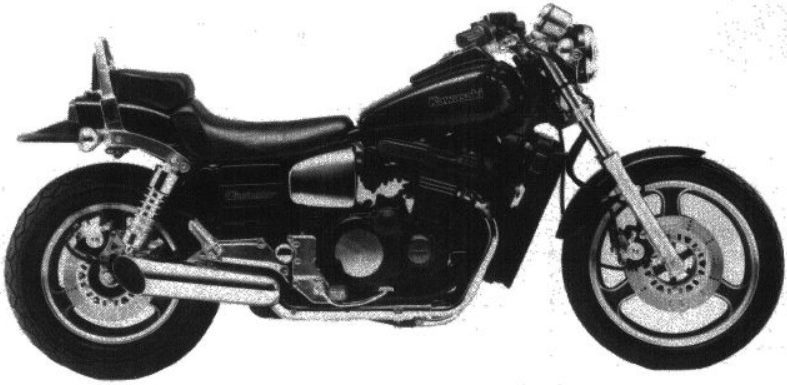

General Specifications

Items			ZL900-A1, A2
Dimensions:			
Overall length			2,240 mm
Overall width			810 mm
Overall height			1,075 mm
Wheelbase			1,595 mm
Road clearance			145 mm
Seat height			745 mm
Dry weight			2,330 N (238 kg), (Cal) 2,340 N (238.5 kg)
Crub weight:	Front		1,180 N (120 kg), (Cal) 1,180 N (120.5 kg)
	Rear		1,350 N (138 kg)
Fuel tank capacity			11.0 L
Performance:			
Climbing ability			30°
Braking distance			12.5 m from 50 km/h
Minimum turning radius			3.0 m
Engine:			
Type			4-stroke, DOHC, 4-cylinder
Cooling system			Liquid-cooled
Bore and stroke			72.5 x 55.0 mm
Displacement			908 mL
Compression ratio			11.0
Maximum horsepower			77.2 kW (105 PS) @9,500 r/min (rpm)
Maximum torque			85.3 N-m (8.7 kg-m, 62.9 ft-lb) @8,000 r/min (rpm)
Carburetion system			Carburetors, Keihin CVK 32 x4
Starting system			Electric starter
Ignition system			Battery and coil (transistorized)
Timing advance			Electronically advanced
Ignition timing			From 10° BTDC @1,000 ((Cal) 1,200) r/min (rpm) to 35° BTDC @3,500 r/min (rpm)
Spark plug			NGK D8EA or ND X24ES-U © NGK DR8ES-L or ND X24ESR-U
Cylinder numbering method			Left to right, 1-2-3-4
Firing order			1-2-4-3
Valve timing:	Inlet	Open	37.5° BTDC
		Close	57.5° ABDC
		Duration	275°
	Exhaust	Open	57.5° BBDC
		Close	37.5° ATDC
		Duration	275°
Lubrication system			Forced lubrication (wet sump)
Engine oil:	Grade		SE or SF class
	Viscosity		SAE 10W40, 10W50, 20W40, or 20W50
	Capacity		3.7 L

Items		ZL900-A1, A2
Drive Train:		
Primary reduction system:	Type	Gear
	Reduction ratio	1.732 (97/56)
Clutch type		Wet multi disc
Transmission:	Type	6-speed, constant mesh, return shift
	Gear ratios: 1st	2.800 (42/15)
	2nd	2.000 (38/19)
	3rd	1.590 (35/22)
	4th	1.333 (32/24)
	5th	1.153 (30/26)
	6th	1.035 (29/28)
Final drive system:	Type	Shaft
	Reduction ratio	2.994 (16/19 x 32/9)
	Overall drive ratio	5.371 @Top gear
Final gear case oil:	Type	API GL-5 Hypoid gear oil SAE 90 (above 5°C) SAE 80 (below 5°C)
	Capacity	220 mL
Frame:		
Type		Tubular, double cradle
Caster (rake angle)		29°
Trail		102 mm
Front tire:	Type	Tubeless
	Size	100/90-18 56H
Rear tire:	Type	Tubeless
	Size	160/80-15 74H
Front suspension:	Type	Telescopic fork (pneumatic)
	Wheel travel	150 mm
Rear suspension:	Type	Swing arm (pneumatic)
	Wheel travel	110 mm
Brake type:	Front	Dual disc
	Rear	Single disc
Electrical Equipment:		
Battery		12 V 14 Ah
Headlight:	Type	Semi-sealed beam
	Bulb	12 V 60/55 W (quartz-halogen)
Tail/brake light		12 V 8/27 W x2
Alternator:	Type	Three-phase AC
	Rated output	25 A @6,000 r/min (rpm), 14 V
Voltage regulator:	Type	Short-circuit

Specifications subject to change without notice, and may not apply to every country.

Ⓒ : Canadian Model
(Cal): Californian Model

Periodic Maintenance Chart

The scheduled maintenance must be done in accordance with this chart to keep the motorcycle in good running condition. **The initial maintenance is vitally important and must not be neglected.**

OPERATION \ FREQUENCY	Every (Whichever comes first)	*ODEMETER READING 800 km	5,000 km	10,000 km	15,000 km	20,000 km	25,000 km	30,000 km	See Page
Carburetor synchronization – check †		•	•	•	•	•	•	•	B.M. 2-7
Idle speed – check †		•	•	•	•	•	•	•	2-6
Throttle grip play – check †		•		•		•		•	2-5
Spark plug – clean and gap †			•	•	•	•	•	•	B.M. 16-23
Valve clearance – check †		•		•		•		•	B.M. 4-18
Air suction valve – check †			•	•	•	•	•	•	B.M. 4-7
Air cleaner element – clean		•		•		•		•	B.M. 2-13
Air cleaner element – replace	5 cleanings					•			B.M. 2-13
Fuel system – check †				•		•		•	B.M. 2-9
Cylinder head bolts and nuts – check †		•		•		•		•	B.M. 4-3
Evaporative emission control system (C) – check †		•	•	•	•	•	•	•	2-8
Battery electrolyte level – check †	month	•	•	•	•	•	•	•	B.M. 16-9
Brake light switch – check †		•	•	•	•	•	•	•	B.M. 16-34
Brake wear – check †			•	•	•	•	•	•	11-5
Brake/clutch fluid level – check †	month	•	•	•	•	•	•	•	B.M. 11-11/ B.M. 5-5
Brake/clutch fluid – change	2 years					•			B.M. 11-12/ B.M. 5-5
Steering – check †		•	•	•	•	•	•	•	13-3
Final gear case oil level – check †				•		•		•	10-5
Final gear case oil – change		•						•	10-5
Propeller shaft joint – lubricate				•				•	10-14
Nut, bolt, and fastener tightness – check †		•		•		•		•	17-8
Muffler connecting pipe clamp bolts and power chamber mounting bolts tightness – check †		•	•	•		•		•	4-6
Tire wear – check †			•	•	•	•	•	•	9-5
Engine oil – change	year	•		•		•		•	6-5
Oil filter – replace		•		•		•		•	6-5

OPERATION \ FREQUENCY	Every (Whichever comes first)	*ODOMETER READING 800 km	5,000 km	10,000 km	15,000 km	20,000 km	25,000 km	30,000 km	See Page
General lubrication – perform			•	•	•	•	•	•	17-8
Front fork oil – change								•	12-4
Swing arm pivot – lubricate				•				•	12-12
Coolant – change	2 years							•	3-3
Radiator hoses, connections – check †	year	•		•		•		•	B.M. 3-10
Steering stem bearing – lubricate	2 years					•			B.M. 13-6
Brake/clutch master cylinder cup and dust seal – replace	2 years								B.M. 11-9/ B.M. 5-7
Caliper piston seal and dust seal – replace	2 years								B.M. 11-6
Clutch slave cylinder piston seal – replace	2 years								B.M. 5-8
Brake/clutch hose and pipe – replace	4 years								B.M. 11-15/ B.M. 5-7
Fuel hose – replace	4 years								

*: For higher odometer readings, repeat at the frequency interval established here.
† : Replace, add, adjust, clean, or torque if necessary.
(C): California vehicle only

Fuel System

Table of Contents

Exploded View

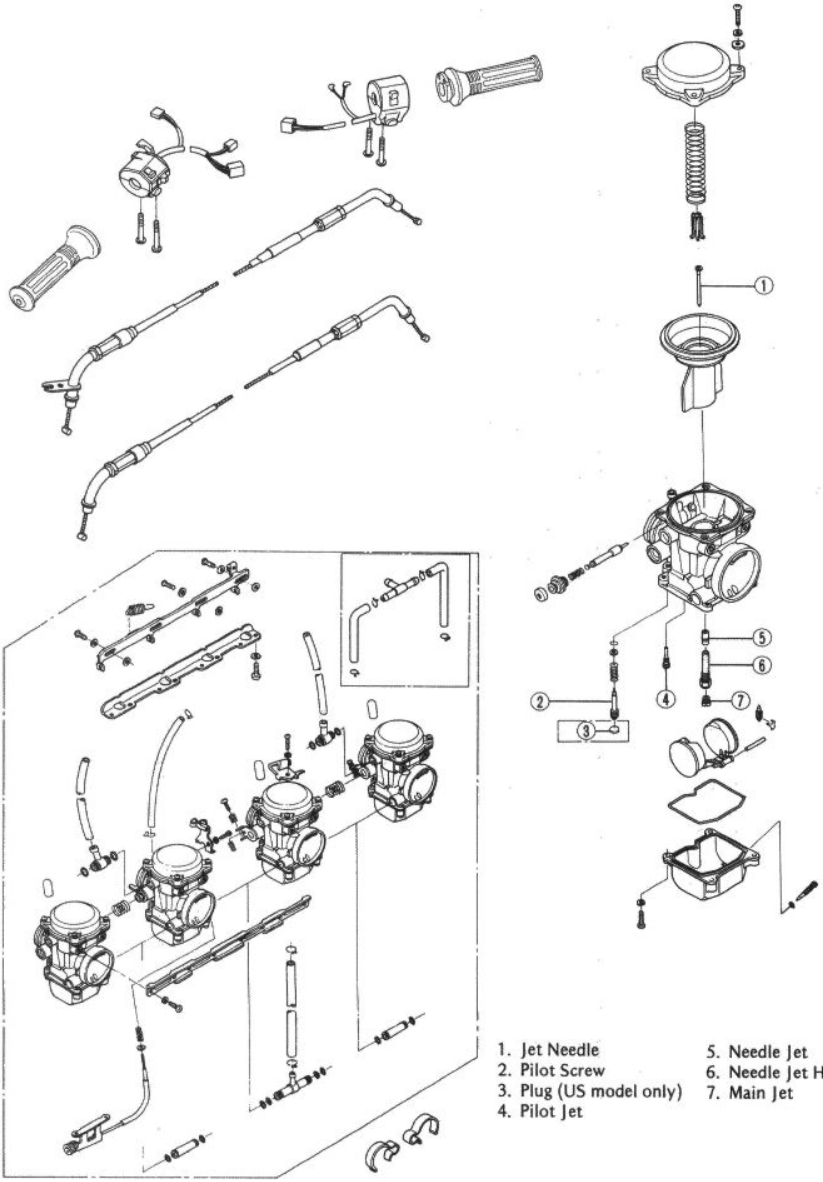

1. Jet Needle
2. Pilot Screw
3. Plug (US model only)
4. Pilot Jet
5. Needle Jet
6. Needle Jet Holder
7. Main Jet

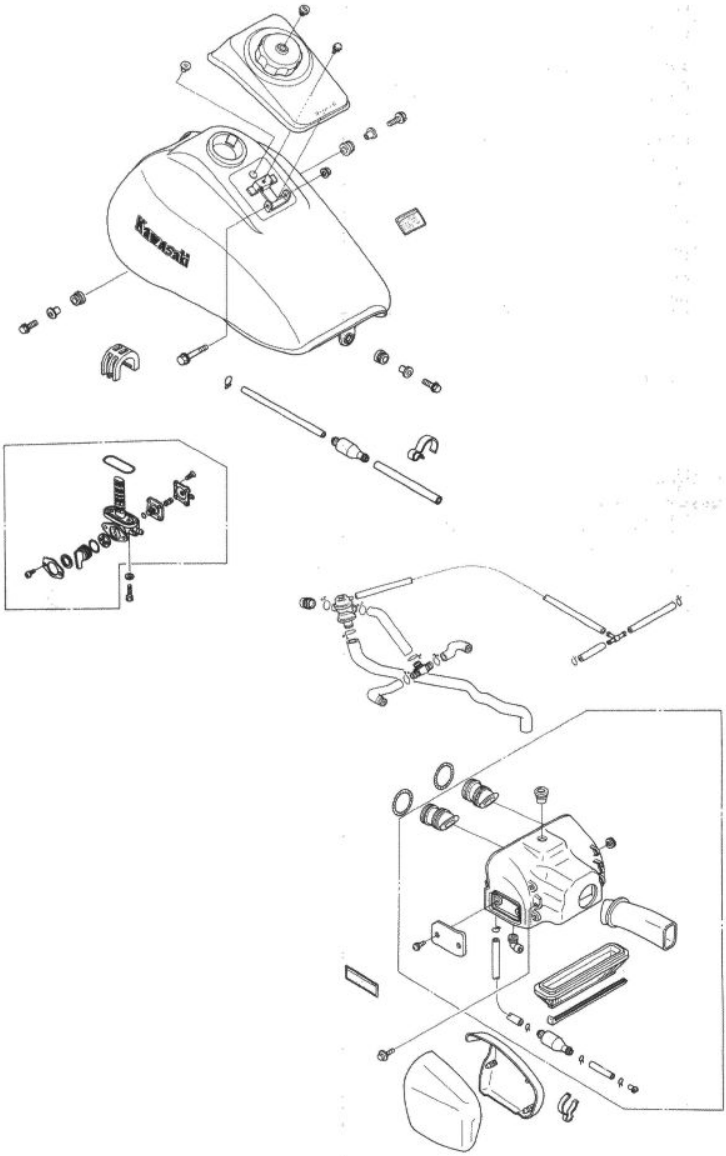
Kawasaki

Specifications

The following specifications are only those that are unique to the ZL900 model. For all other data refer to the base manual.

Carburetor Specifications

Make/Type	Keihin/CVK32
Main Jet	125
Main Air Jet	130
Jet Needle	N27N
Pilot Jet	35
Pilot Air Jet	125
Pilot Screw	$2^1/_8$ turns out, Ⓤ –
Starter Jet	45, (Cal) 40
Fuel Level	–0.5 mm
Float Height	17 mm

Ⓤ : US model
(Cal) : Californian model

Idle Speed

Standard: 1,000 ±50 r/min (rpm)
(Californian model: 1,200 ±50 r/min (rpm))

Throttle Grip and Cable

Throttle Grip Play Inspection

If the throttle grip has excessive free play due to cable stretch or misadjustment, there will be a delay in throttle response. Also, the throttle valves may not open fully at full throttle.

On the other hand, if the throttle grip has no play, the throttle will be hard to control, and the idle speed will be erratic. Check the throttle grip play periodically in accordance with the Periodic Maintenance Chart, and adjust the play if necessary.

- Check that there is 2 ~ 3 mm throttle grip free play by lightly turning the throttle grip back and forth.

Throttle Grip Free Play
2 ~ 3 mm

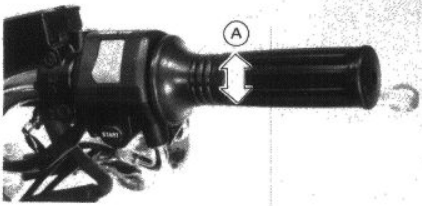

A. Free Play

- With the throttle grip closed, check that the decelerator inner cable is tight by touching it at the lower end with a thin-bladed screwdriver.

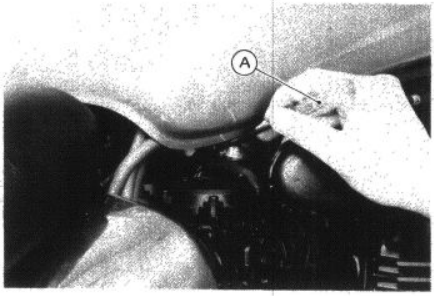

A. Screwdriver

★If the throttle grip free play is incorrect or the decelerator inner cable is loose with the throttle closed, adjust the throttle cables.

Throttle Cable Adjustment

- Loosen the locknuts, and screw both throttle cable adjusting nuts in fully at the upper end of the throttle cables so as to give the throttle grip plenty of play.
- With the throttle grip completely closed, turn out the decelerator cable adjuster nut until the inner cable just becomes tight.
- Tighten the locknut.

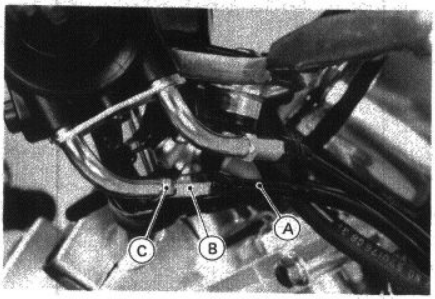

A. Decelerator Cable
B. Adjusting Nut
C. Locknut

- Turn the accelerator cable adjuster nut until the correct throttle grip free play is obtained.
- Tighten the locknut.

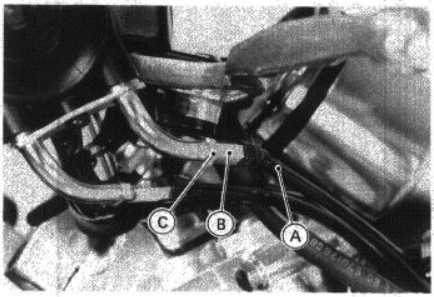

A. Accelerator Cable
B. Adjusting Nut
C. Locknut

- Check that the throttle linkage lever stops against the idle adjusting screw with the throttle grip closed.

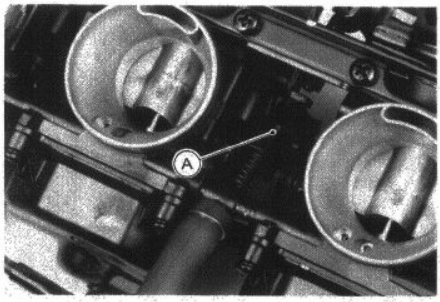

A. Adjusting Screw

★If the throttle cables can not be adjusted by using the cable adjusting nuts at the upper end of the throttle cables, use the cable adjusters at the lower ends of the throttle cables. Do not forget to securely tighten the adjuster mounting nuts.
●Start the engine.
●Turn the handlebar from side to side while idling the engine.
★If idle speed varies, the throttle cable may be poorly routed or it may be damaged.
●Correct any problem before operating the motorcycle.

WARNING

○**Operation with an improperly adjusted, incorrectly routed, or damaged cable could result in an unsafe riding condition.**

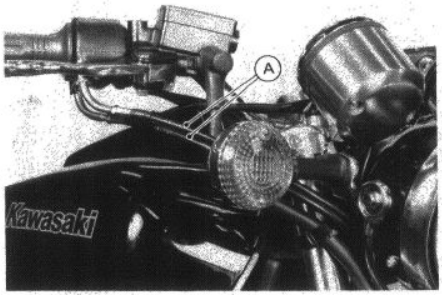

A. Throttle Cables

Choke Cable

Choke Cable Free Play Inspection

●Push the choke lever back all the way to its released position.

●Pull the choke lever back until starter plunger lever engages with the starter plunger on the carburetor. The amount of lever travel is the amount of choke cable free play.

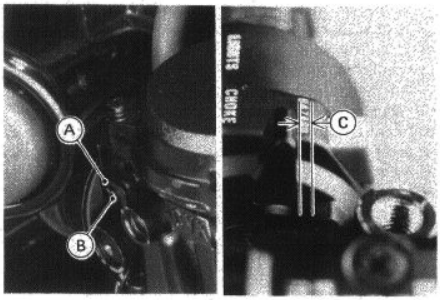

A. Starter Plunger Lever
B. Starter Plunger
C. Free Play

★If free play is not correct, adjust the choke cable.

Choke Cable Free Play
2 ~ 3 mm

Carburetors

Idle Speed Inspection

The following specifications are only those that are unique to the ZL900 model. For all other data refer to the base manual.

Idle Speed
1,000 ±50 r/min (rpm)
(Californian model: 1,200 ±50 r/min (rpm))

Fuel Tank

Fuel Tank Removal

●Open the seat.
●Unscrew the mounting bolts from the rear end and both sides of the tank.

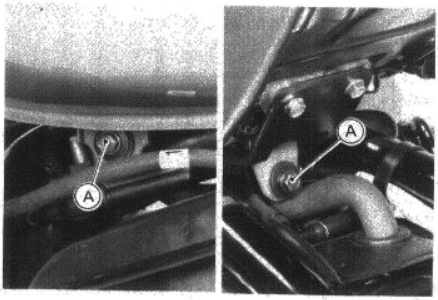

A. Bolts

●Turn the fuel tap to the ON position.
●Pull the hoses off the tank and tap.
○For California vehicles, the breather and fuel return hoses must be disconnected from the tank fittings before tank removal. Plug the fuel return fitting. This prevents gasoline from flowing into the canister.

WARNING

○**Gasoline is extremely flammable and can be explosive under certain conditions. Turn the engine stop switch OFF. Do not smoke. Make sure the area is well ventilated and free from any source of flame or sparks; this includes any appliance with a pilot light.**

CAUTION

○**If gasoline, solvent, water or any other liquid enters the canister, the canister's vapor absorbing capacity is greatly reduced. If the canister does become contaminated, replace it with a new one.**

●Remove the tank from the frame.
●Drain the fuel tank.
○Arrange a suitable container under the fuel tank.
○Turn the fuel tap PRI to drain the fuel into the container.

Fuel Tank Installation

●Fuel Tank Installation is the reverse of removal. Note the following.
●Read the WARNING in the Fuel Tank Removal section.
●Check the rubber damper on the frame top-tube.

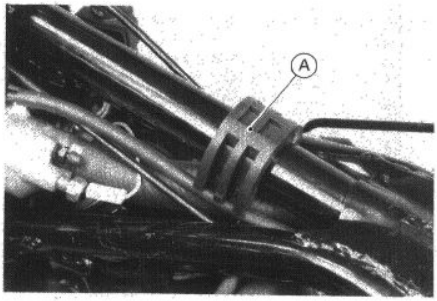

A. Damper

★If the damper is damaged or deteriorated, replace it.
●Be sure the hoses are clamped to the fuel tap and fuel tank to prevent leaks.

Fuel Tap Inspection

●Remove the fuel tap (see Fuel Tap Removal).
●Check the fuel tap filter screens for any breaks or deterioration.

Fuel Tap

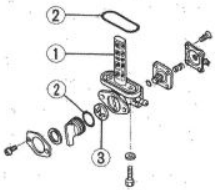

1. Filter
2. O-ring
3. Gasket

★If the fuel tap screens have any breaks or are deteriorated, dirt may reach the carburetor, causing poor running. Replace the fuel tap.
★If the fuel tap leaks, or allows fuel to flow when it is ON or RES without the engine running, replace the damaged gasket or O-ring.

Fuel Tank and Cap Inspection

●Visually inspect the gaskets on the tank and cap for any damage.
★Replace the gaskets if they are damaged.

- Remove the hose(s) from the fuel tank, and open the tank cap.
- Check to see if the breather pipe (also the fuel return pipe for the US California vehicle) in the tank are not clogged. Check the tank cap breather too.
- ★If they are clogged, remove the tank and drain it, and then blow the breather free with compressed air.

Evaporative Emission Control System (US California Vehicle only)

The Evaporative Emission Control System routes fuel vapors from the fuel system into the running engine or stores the vapors in a canister when the engine is stopped. Although no adjustments are required, a thorough visual inspection must be made at the intervals specified by the Periodic Maintenance Chart.

Parts Removal/Installation Notes

WARNING

○Gasoline is extremely flammable and can be explosive under certain conditions. Turn the ignition switch OFF. Do not smoke. Make sure the area is well ventilated and free from any source of flame or sparks; this includes any appliance with a pilot light.

CAUTION

○If gasoline, solvent, water or any other liquid enters the canister, the canister's vapor absorbing capacity is greatly reduced. If the canister does become contaminated replace it with a new one.

- To prevent gasoline from flowing into the canister or from flowing out of the canister, hold the separator perpendicular to the ground.
- Connect the hoses according to the diagram of the system. Make sure they do not get pinched or crimped.

Evaporative Emission Control System

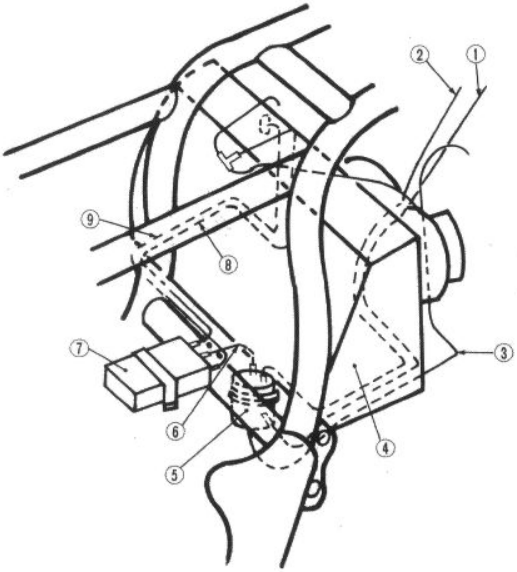

1. Fuel Return Hose (Red)
2. Breather Hose (Blue)
3. Vacuum Hose (White)
4. Air Cleaner Housing
5. Liquid/Vapor Separator
6. Breather Hose (Blue)
7. Canister
8. Breather Hose
9. Purge Hose (Green)

Cooling System

Table of Contents

3-2 COOLING SYSTEM

Exploded View

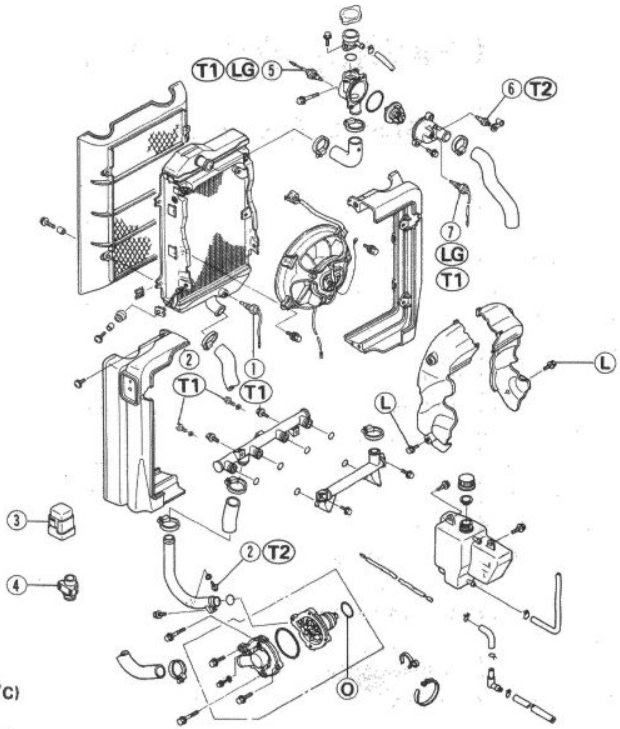

1. Fan Switch (97°C)
2. Drain Plug
3. Fan Switch Relay
4. Fan Relay
5. Water Temperature Switch (120°C)
6. Bleeder Bolt
7. Fan Switch (110°C)

L: Apply non-pemanent locking agent to the threads.
LG: Apply liquid gasket to the threads.
O: Apply oil at installation.
T1: 7.4 N-m (0.75 kg-m, 65 in-lb)
T2: 7.8 N-m (0.80 kg-m, 69 in-lb)

Specifications

The following specifications are only those that are unique to the ZL900 model. For all other data refer to the base model.

Item	Standard
Coolant Provided when Shipping:	
Total amount	3.1 L

Cooling System

The water cooling system is a pressurized forced circulation type. When the engine load varies, this system controls the engine temperature within narrow limits where the engine operates most efficiently. In this way the engine performs stably in various riding conditions, and possesses high durability. If the coolant or engine oil temperature goes up beyond the predetermined level, either thermostatic fan switch conducts to operate the fan relay. The fan relay closes its contacts, completes the fan motor circuit, and the cooling fan turns to speed up the cooling action of the radiator. When the coolant or oil cools down; the fan switches cut the relay current, and the fan stops. This electric cooling fan system saves engine power, and reduces the battery load.

When the engine is cold, the thermostat is closed so that the coolant flow is restricted through the bypass hole, causing the engine to warm up more quickly.

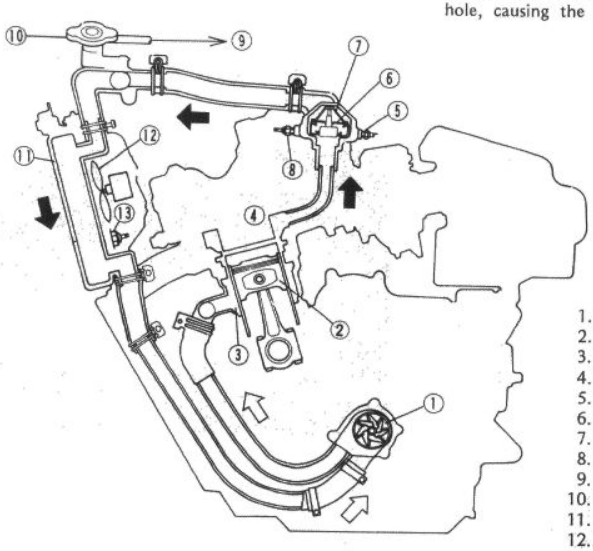

1. Water pump: driven by oil pump
2. Piston
3. Cylinder jacket
4. Cylinder head
5. Water temperature switch
6. Bypass hole (Air bleeder hole)
7. Thermostat
8. Thermostatic fan switch
9. To reservoir tank
10. Radiator cap
11. Radiator
12. Fan
13. Thermostatic fan switch

Coolant

Coolant Draining

The coolant should be changed periodically to ensure long engine life.

CAUTION

○Use coolant containing corrosion inhibitors made specifically for aluminum engines and radiators in accordance with the instructions of the manufactures (See Coolant Filling Section).

WARNING

○To avoid burns do not remove the radiator cap or try to change the coolant when the engine is still hot. Wait until it cools down.

○Coolant on tires will make them slippery and can cause an accident and injury. Immediately wipe up or wash away any coolant that spills on the frame, engine, or other painted parts.

○Since coolant is harmful to the human body, do not use for drinking.

- Remove the fuel tank (see Fuel Tank Removal in the Fuel System chapter).
- Remove the frame gadget.

Frame Gadget

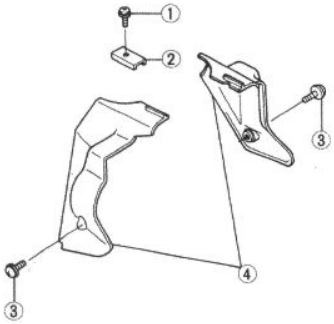

1. Clamp Screw
2. Clamp
3. Mounting Screw
4. Frame Gadget

- Remove the radiator cap in two steps. First turn the cap counterclockwise to the first stop and wait there for a few seconds to release cooling system pressure. Then push down and remove the cap.

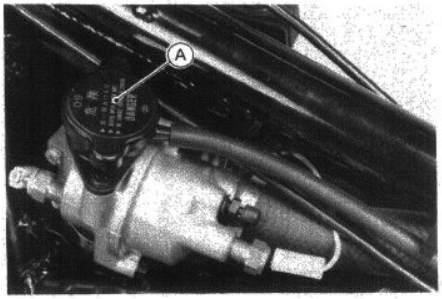

A. Radiator Cap

- Drain the coolant from the radiator and engine by removing the drain plug at the bottom of the radiator pipe.

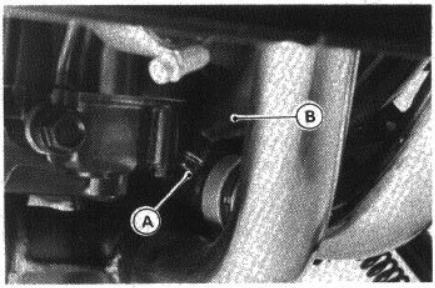

A. Drain Plug B. Radiator Pipe

- Remove the junction box (see Junction Box Removal).
- Unscrew the bolts and remove the reservoir tank with hoses attached.
- Unscrew the cap and pour the coolant into a container.

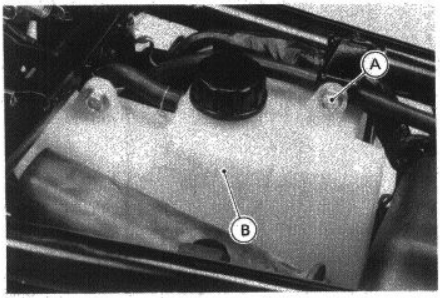

A. Bolt B. Reservoir Tank

- Remove the radiator (see Radiator Removal).
- Remove the drain plugs at the bottom of the cylinder after removal of the exhaust pipes and the front water pipe.

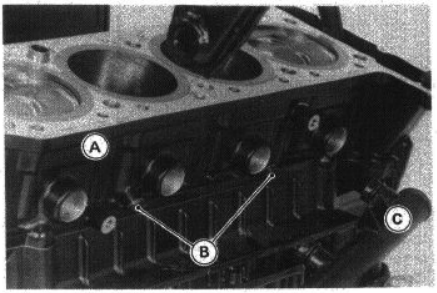

A. Cylinder C. Front Water Pipe
B. Drain Plug

•Inspect the old coolant for color, smell (see Coolant Deterioration in the Base Manual).

Water Pump

Pump Cover Removal/Installation

•Remove the clutch slave cylinder (see Clutch Slave Cylinder Removal in the Clutch chapter).
•Remove the clutch push rod to prevent its damage.

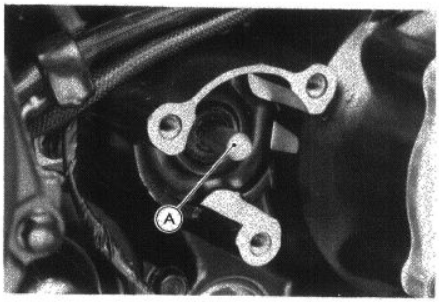

A. Clutch Push Rod

•Loosen the clamp and remove the water pump cover.

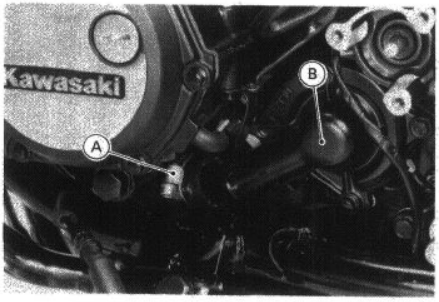

A. Clamp B. Water Pump Cover

•When installing the water pump cover, align the mark on the cover with the arrow mark on the hose.

Cover Installation

1. Water Pump Cover
2. Hose
3. Marks

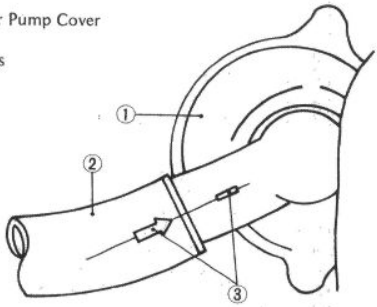

Water Pump Removal

•Drain the engine oil (see Engine Oil and/or Filter Change in the Engine Lubrication System chapter).
•Remove the water pipe mounting bolt and pull the pipe out of the pump case.

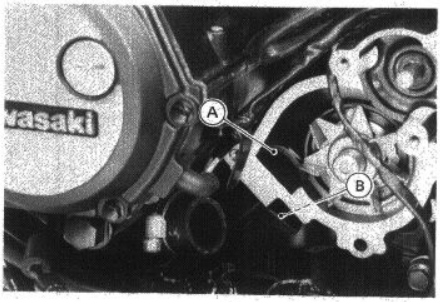

A. Water Pipe B. Bolt

•Pull the pump unit out of the left crankcase.
○The pump unit may be removed by installing two 6 mm diameter 1.0 mm pitch bolts and pulling them.

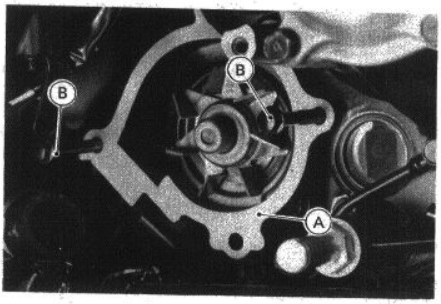

A. Pump Unit B. Bolt

Radiator, Radiator Fan

Radiator Removal

●Disconnect the fan motor connector before removal of the radiator or radiator fan (see Wiring Inspection in the Electrical System chapter).

WARNING

○**The radiator fan and fan switch are connected directly to the battery. The radiator fan may start even if the ignition switch is off. NEVER TOUCH THE RADIATOR FAN UNTIL THE ENGINE COMPLETELY COOLS OFF. TOUCHING THE FAN BEFORE THE ENGINE COOLS COULD CAUSE INJURY FROM THE FAN BLADES.**

●Loosen the mounting bolts, and remove the left side radiator cover.

Radiator

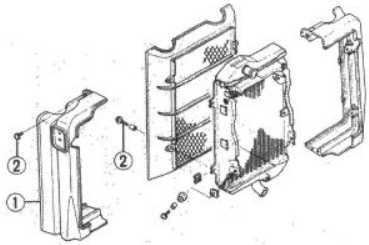

1. Left Side Radiator Cover 2. Mounting Bolt

●Loosen the hose clamps and pull out the radiator hoses on both sides.
●Unscrew the radiator mounting bolts.

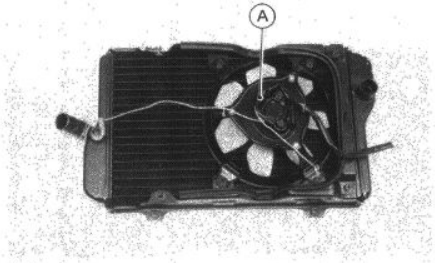

A. Fan

Radiator Installation Note

●Be sure to install the fan switch ground lead on the radiator.

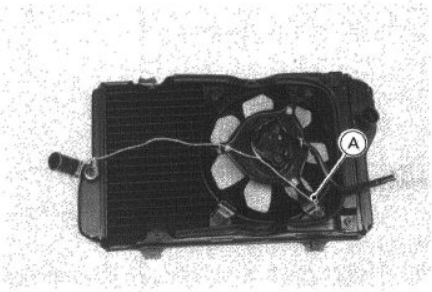

A. Ground Lead

Radiator Hose, Pipe, Reservoir Tank Hose Installation Note

●Route the reservoir tank hoses as shown.

Reservoir Tank Hose Routing

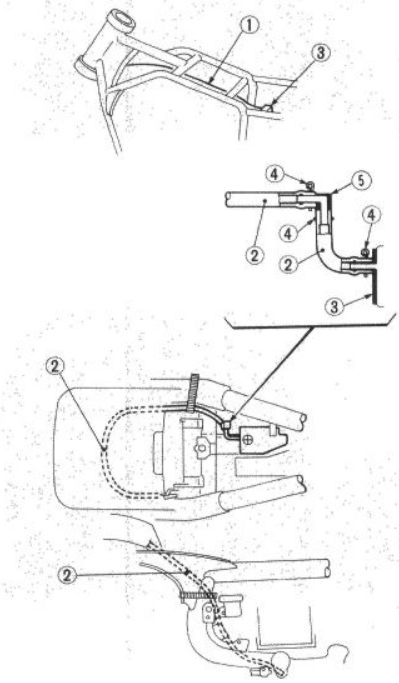

1. Reservoir Tank Hose
2. Air Vent Hose
3. Reservoir Tank
4. Clamp
5. Connecting Pipe

Thermostat

Thermostat Removal/Installation

- Remove the radiator cap (see Coolant Draining).
- Drain the coolant (see Coolant Draining).
- Loosen the hose clamps, and pull the radiator hoses off the housing.

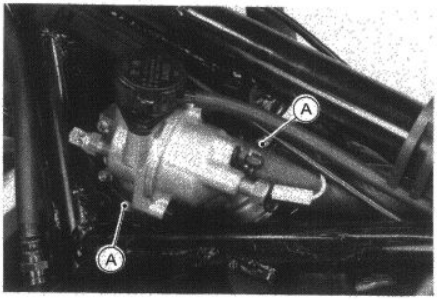

A. Clamps

- Unscrew the water temperature switch (see Exploded View in the Electrical System).
- Unscrew the thermostat housing mounting bolts.
- Remove the thermostat housing.

Thermostat Housing

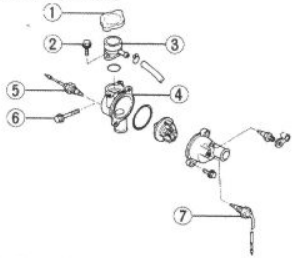

1. Radiator Cap
2. Radiator Filler Neck Mounting Bolts
3. Radiator Filler Neck
4. Thermostat Housing
5. Water Temperature Switch
6. Thermostat Housing Mounting Bolts
7. Fan Switch (110°)

- When installing the thermostat housing, align the mark on the housing with the arrow mark on the hose.

Thermostat Housing Installation

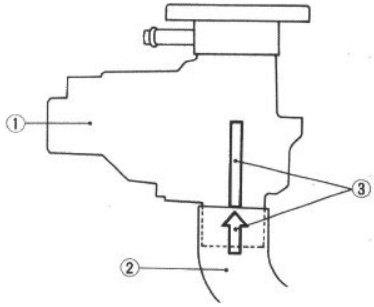

1. Thermostat Housing
2. Hose
3. Marks

Engine Top End

Table of Contents

B.M. : Base Manual

Exploded View

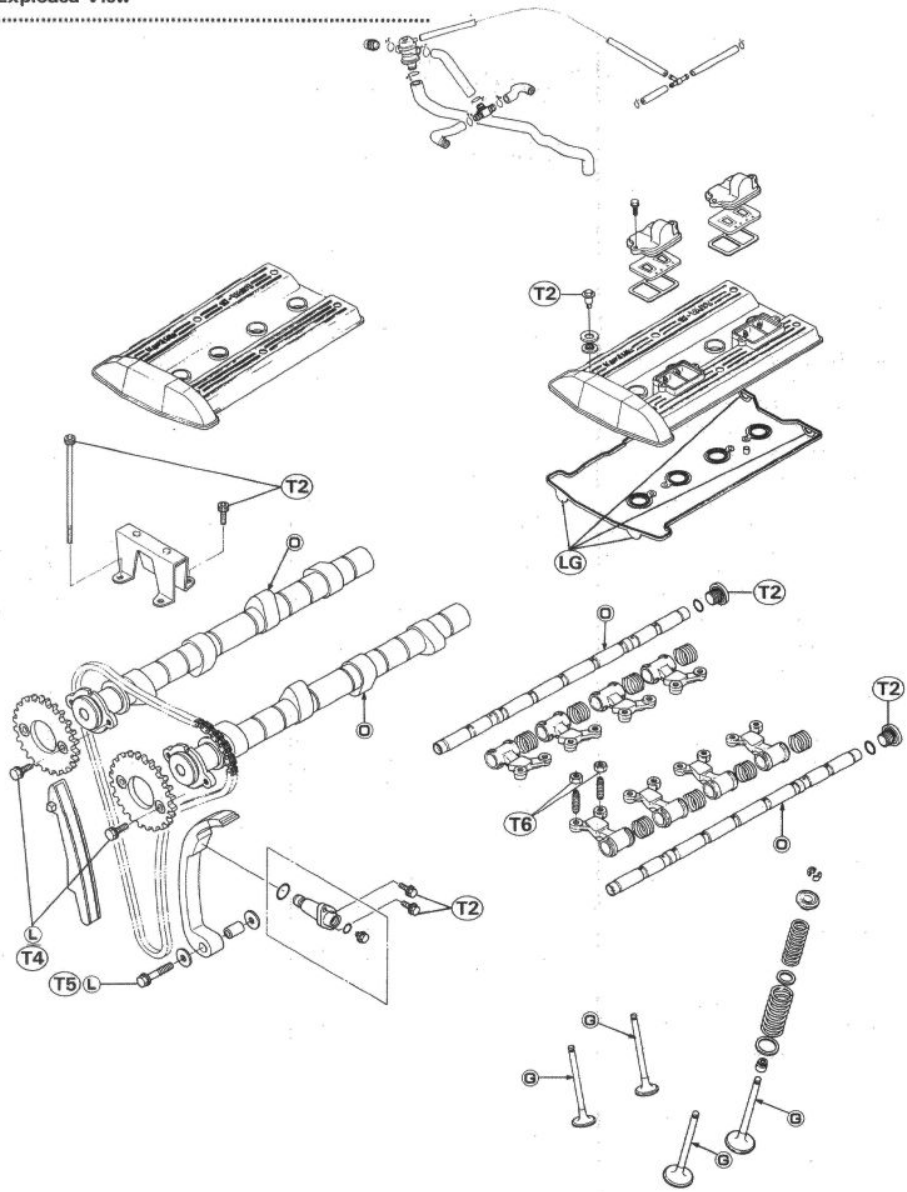

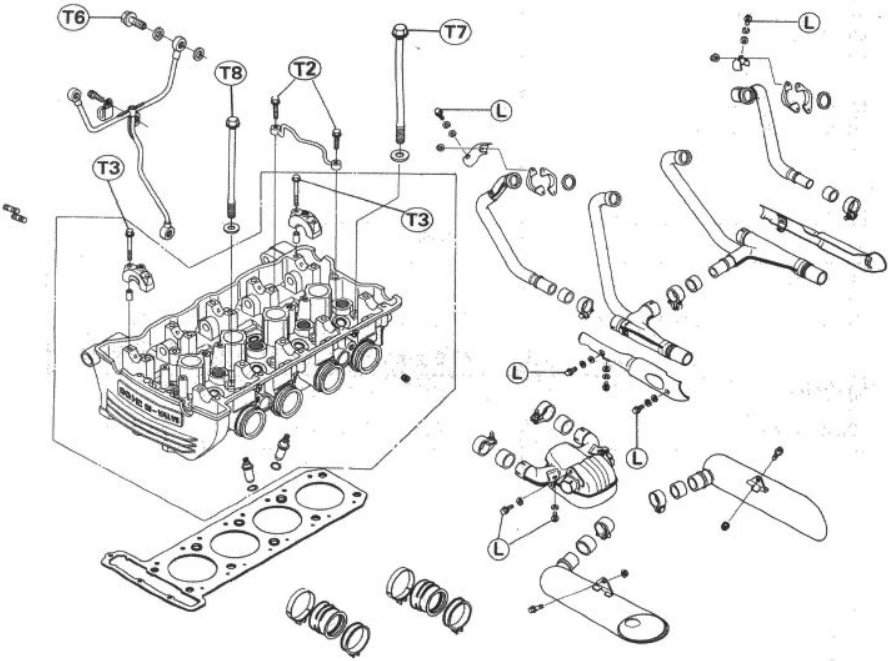

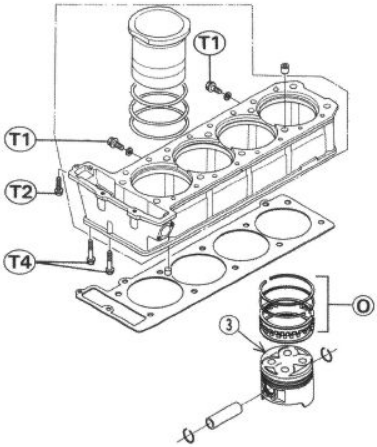

1. White Bolt
2. Black Bolt
3. Mark

G: Apply a thin coat of a grease.
L: Apply a non-permanent locking agent to the threads.
LG: Apply liquid gasket to the threads.
O: Apply oil at installation.
T1: 7.8 N-m (0.80 kg-m, 69 in-lb)
T2: 9.8 N-m (1.0 kg-m, 87 in-lb)
T3: 12 N-m (1.2 kg-m, 104 in-lb)
T4: 15 N-m (1.5 kg-m, 11.0 ft-lb)
T5: 20 N-m (2.0 kg-m, 14.5 ft-lb)
T6: 25 N-m (2.5 kg-m, 18.0 ft-lb)
T7: 39 N-m (4.0 kg-m, 29 ft-lb)
When reusing any one of the following parts:
Bolt
Washer
Cylinder Head
36 N-m (3.7 kg-m, 27 ft-lb)
T8: 51 N-m (5.2 kg-m, 38 ft-lb)
When reusing any one of the following parts:
Bolt
Washer
Cylinder Head
48 N-m (4.9 kg-m, 35 ft-lb)

Specifications

The following specifications are only those that are unique to the ZL900 model. For all other data refer to the base manual.

Item	Standard	Service Limit
Cylinder Head, Valves:		
Valve spring free length: Inner	37.2 mm	36 mm
Outer	42.0 mm	40 mm
Camshaft:		
Cam height	35.243 – 35.385 mm	35.14 mm

Clean Air System (US model)

Vacuum Switch Valve Installation

●Install the switch valve as shown.

Vacuum Switch Valve Installation

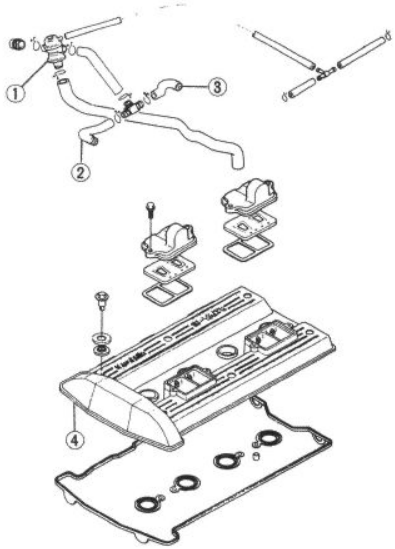

1. Vacuum Switch Valve
2. Long Hose
3. Short Hose
4. Cylinder Head Cover

Cylinder Head Cover

Cylinder Head Cover Removal

●Remove the following parts before the removal.
- Fuel tank (see Fuel Tank Removal in Fuel System chapter)
- Thermostat (see Thermostat Removal in the Cooling System chapter)
- Ignition coils (see Ignition Coil Removal/Installation Notes in the Electrical System chapter)
- Air suction valves and hoses (US model).
- LH knee pad (see Engine Removal/Installation chapter)

Cylinder Head

Cylinder Head Removal

●Cylinder head removal procedure of ZL900 is the same as for the ZX900 except following.

○Since cylinder head mounting bolt is not on the ZL900, omit removal of this bolt.

Muffler

Muffler Removal

●Loosen the muffler clamp bolts.
●Unscrew the muffler mounting bolts, and remove the muffler.
●Unscrew the power chamber cover mounting bolts, and remove the cover.
●Loosen the power chamber clamp bolts.
●Unscrew the power chamber mounting bolts, and remove the power chamber.

Muffler

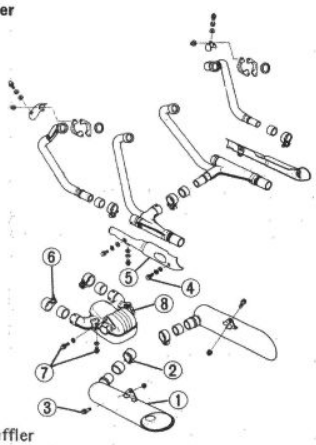

1. Muffler
2. Muffler Clamp Bolts
3. Muffler Mounting Bolts
4. Power Chamber Cover Mounting Bolts
5. Power Chamber Cover
6. Power Chamber Clamp Bolts
7. Power Chamber Mounting Bolts
8. Power Chamber

Muffler Installation Notes

Muffler installation procedure for the ZL900 is the same as for the ZX900, except following.

- When tightening the clamp bolts, clamp the pipe as shown.

Exhaust Piep Clamps

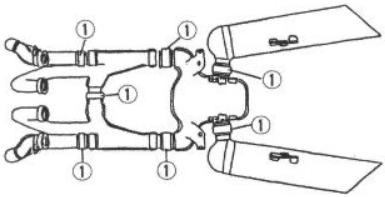

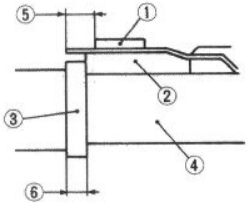

1. Clamp
2. Gasket
3. Retainer
4. Pipe
5. Less than 5 mm
6. 5 mm

Muffler Clamp Bolt and Exhaust Power Chamber Bolt Tightness Inspection

- Check the tightness of the bolts and nuts shown in accordance with the Periodic Maintenance Chart.

Muffler

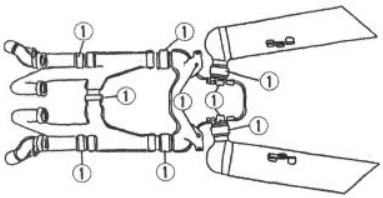

1. Check here.

Clutch

Table of Contents

Exploded View

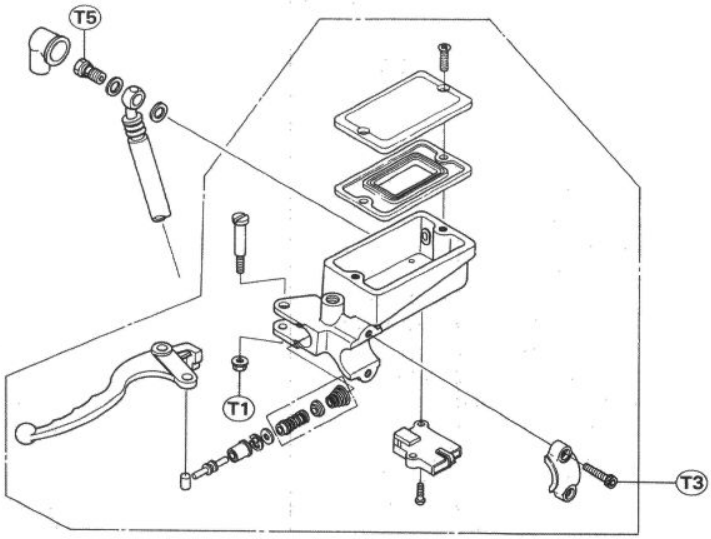

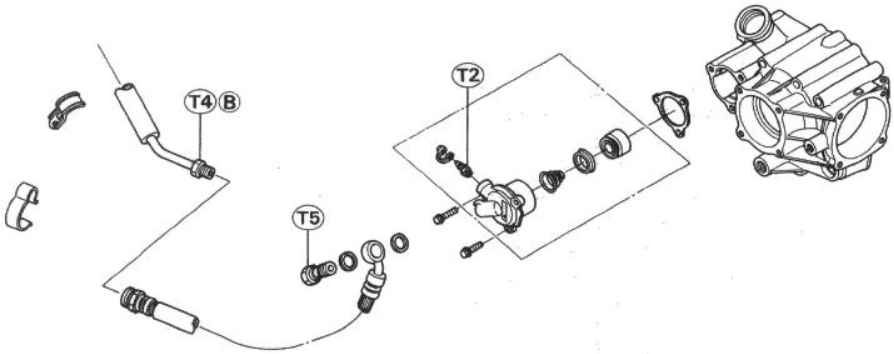

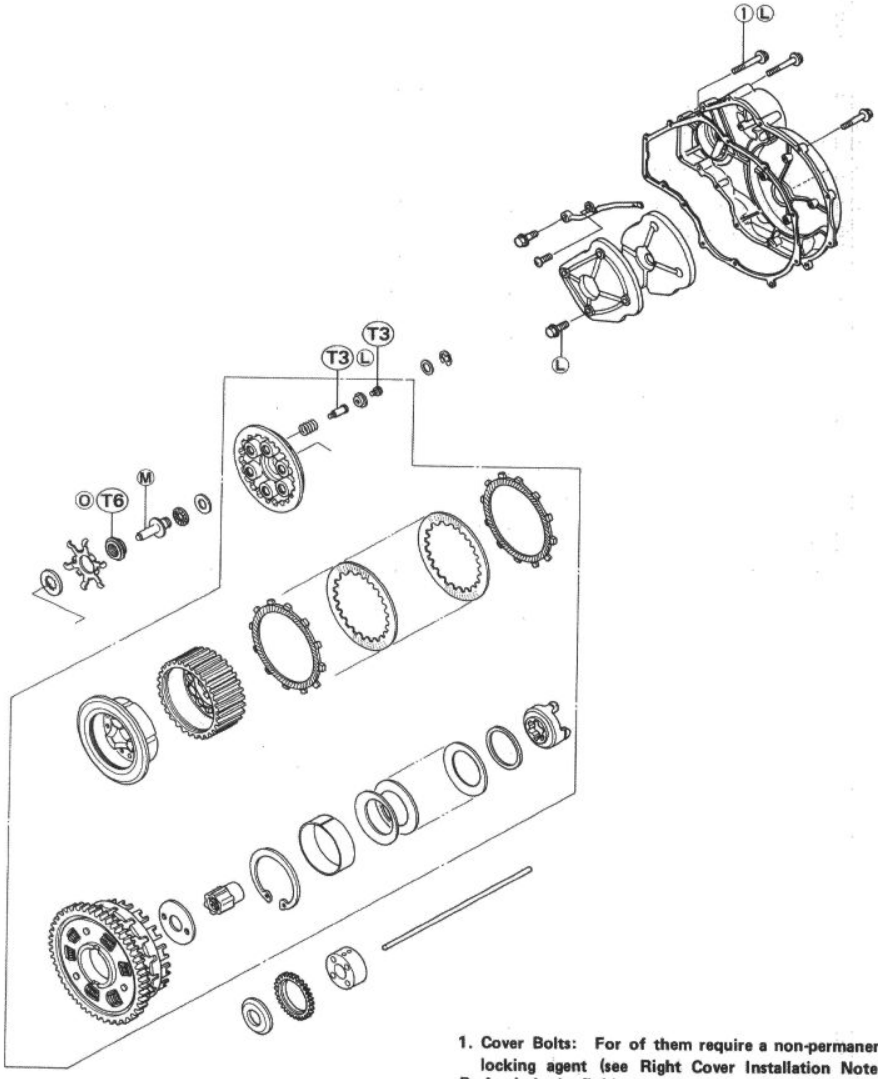

1. Cover Bolts: For of them require a non-permanent locking agent (see Right Cover Installation Note).
B: Apply brake fluid to the threads.
O: Apply oil at installation.
L: Apply a non-permanent locking agent to the threads.
T1: 5.9 N-m (0.60 kg-m, 52 in-lb)
T2: 7.8 N-m (0.80 kg-m, 69 in-lb)
T3: 8.8 N-m (0.90 kg-m, 78 in-lb)
T4: 18 N-m (1.8 kg-m, 13.0 ft-lb)
T5: 29 N-m (3.0 kg-m, 22 ft-lb)
T6: 125 N-m (13.0 kg-m, 94 ft-lb)

5-4 CLUTCH

Specifications

Item	Standard	Service Limit
Clutch:		
Clutch spring free length	33.2 mm	32.1 mm
Spring plate/pusher clearance	0.05 ~ 0.25 mm	– – –
Spring plate free play	0.55 ~ 0.85 mm (when friction plates are not replaced)	1.15 mm
	0.30 ~ 0.60 mm (when friction plates are replaced)	– – –

Special Tools

Clutch Holder: 57001-305

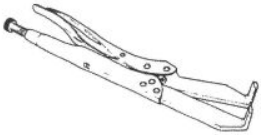

Bearing Driver Set: 57001-1129

Clutch Pipe

Clutch Pipe Installation Note

- Route the clutch pipe as shown.
- Tighten the banjo bolts and the pipe joint to the specified torque (see Exploded View).

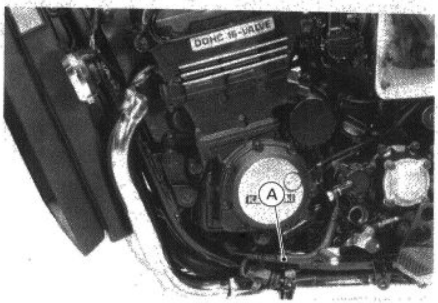

A. Clutch Pipe

Clutch

Clutch Removal

NOTE

○*It is not necessary to remove the alternator sprocket and the chain tensioner for clutch removal.*

- Remove the right engine cover.
- Remove the clutch spring bolts, retainers and springs.
- Remove the spring palte with the spring plate pusher.
- Remove the friction plates and steel plates.

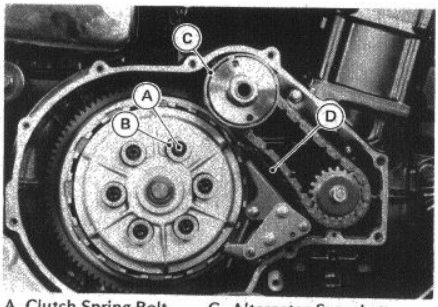

A. Clutch Spring Bolt
B. Retainer
C. Alternator Sprocket
D. Chain Tensioner

- When loosening the clutch hub self-locking nut, use the holder (special tool) to keep the clutch hub from turning as shown in the figure below.

○Turn the wrench counterclockwise slowly.

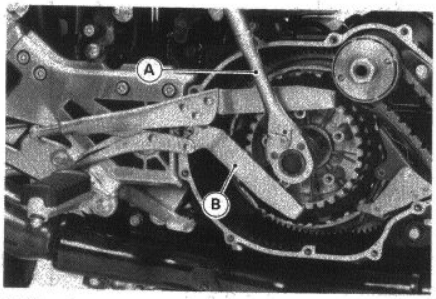

A. Wrench
B. Holder: 57001-305

- Pull out the sleeve, thrust washer, clutch housing, clutch housing bearing collar, oil pump driven gear, and spacer.

○The clutch housing bearing collar can easily be removed by installing right engine cover bolts into the collar holes and pulling them.

○The clutch housing can be removed after removing the bearing collar.

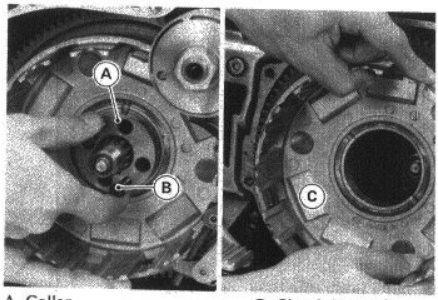

A. Collar
B. Right Engine Cover Bolt
C. Clutch Housing

Clutch Housing

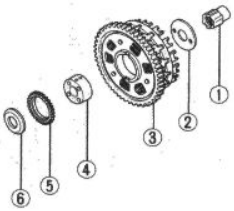

1. Sleeve
2. Thrust Washer
3. Clutch Housing
4. Clutch Housing Bearing Collar
5. Oil Pump Driven Gear
6. Spacer

●Remove the spring, washer, sub clutch hub, clutch hub assembly, and cam follower.

Clutch Hub

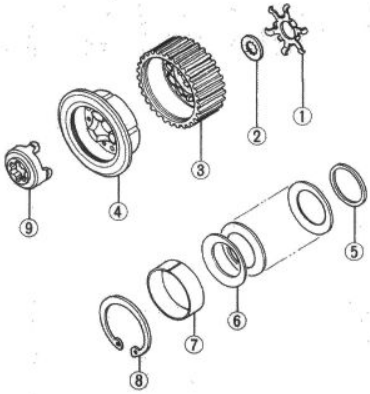

1. Spring
2. Washer
3. Sub Clutch Hub
4. Clutch Hub
5. Spacer
6. Damper Spring
7. Bushing
8. Retainer
9. Cam Follower

Clutch Installation Note

●Clutch installation procedure for the ZL900 is the same as the ZX900, except following.

○When replacing any one of the following parts, adjust the spring plate free play. (see Clutch Plate Replacement).
Spring plate
Friction plate
Steel plate

Clutch Hub Disassembly/Assembly

●Using a suitable press and bearing driver set (special tool), compress the damper springs.

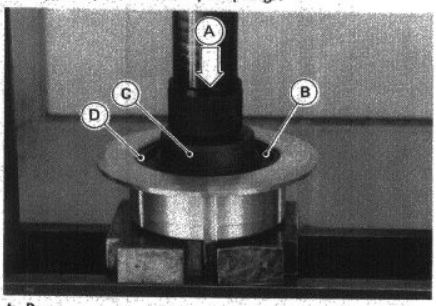

A. Press
B. Damper Spring
C. Bearing Driver Set: 57001-1129
D. Retainer

●Remove the retainer, damper springs, spacer, and cam follower.

Clutch Hub

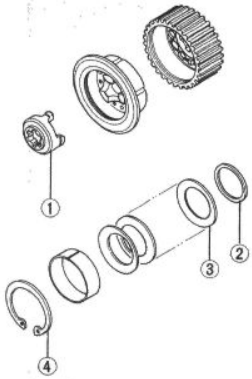

1. Cam Follower
2. Spacer
3. Damper Spring
4. Retainer

Spring Plate Pusher Removal/Installation Note

- Check the clearance between the E-ring and the washer with a thickness gauge.
- ★If the clearance is out of the standard range, change the washer.
- Repeat the above procedure if necessary.

Clearance

Standard: 0.05 ~ 0.25 mm

Spring Plate Pusher Installation

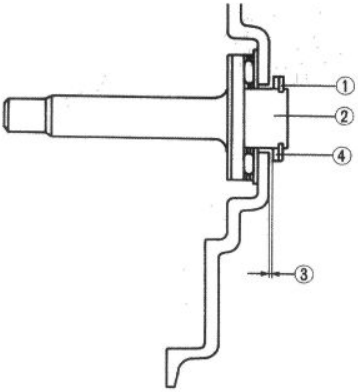

1. E-ring
2. Spring Plate Pusher
3. Clearance
4. Washer

Washers

Thickness (mm)	Part Number
0.8	92022-1751
1.0	92022-1750
1.2	92022-1752
1.4	92022-1753
1.6	92022-1754
1.8	92022-1755

Spring Plate Free Play Measurement

Insufficient clutch free play will cause the engine braking effect to be more sudden, resulting in rear wheel hop. On the other hand, if the free play is excessive, the clutch lever may feel "spongy" or pulsate when pulled.

- Assemble the clutch hub (see Clutch Hub Disassembly/Assembly).
- Install the following parts on the extra drive shaft as shown (see Clutch Removal and Clutch Installation Note).

  Spacer
  Oil pump driven gear
  Clutch housing bearing collar
  Clutch housing
  Thrust washer
  Sleeve
  Clutch hub (assembled)
  Friction plates
  Steel plates
  Spring plate with spring plate pusher

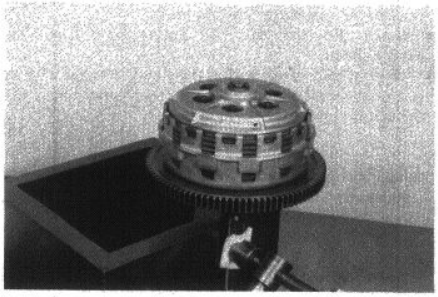

- To measure the free play, set a dial gauge against the center of the pusher on the clutch spring plate.

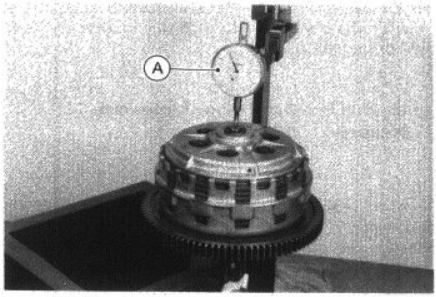

A. Dial Gauge

- Move the clutch housing gear back and forth while holding the drive shaft steady. The difference between the highest and lowest gauge readings is the amount of free play.

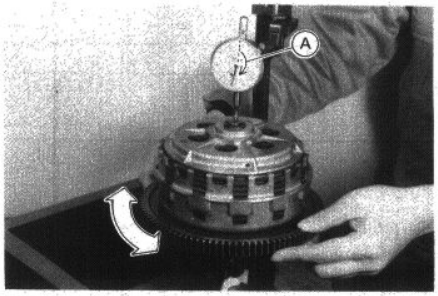

A. Difference

Clutch Plate Replacement

When removing all the friction plates, do not following.

- Install seven 2.3 mm thick steel plates one 2.6 mm plate and all nine friction plates in the housing temporarily, for measurement purposes.
- Measure the free play (see Spring Plate Free Play Measurement).
- ★If the free play is not within the standard range, change one of the steel plates to a thicker or thinner one to get the correct clearance.

Spring Plate Free Play (With all new friction plates)
Standard: 0.30 – 0.60 mm

When reassembling all the new friction plates, to the following.

- Install the plates temporarily for measurement purposes.
- Measure the free play (see Spring Plate Free Play Measurement).
- ★If the free play is not within the standard range, change one of the steel plates to a thicker or thinner one to get the correct clearance.

Spring Plate Free Play (No new friction plates)
Standard: 0.55 – 0.85 mm

When reusing all the original clutch plates, do the following.

- Install the plates temporarily for measurement purposes.
- Measure the free play (see Spring Plate Free Play Measurement).
- ★If the free play is not within the service limit, change all of the friction plates.

Spring Plate Free Play (Use friction plates)
Standard: 0.55 – 0.85 mm
Service Limit: 1.15 mm

Steel Plates

Thickness (mm)	Part Number
2.0	13089-1068
2.3	13089-1004
2.6	13089-1067

Clutch Plate Wear, Damage Inspection

- Visually inspect the plates for signs of siezure, overheating (discoloration), or uneven wear.
- ★If any plates show signs of damage, replace them with new ones.

Cam Damper Inspection

- Remove the clutch (see Clutch Removal).
- Visually inspection the damper cam damper spring, and cam follower.
- ★Replace the part if it appears damaged.

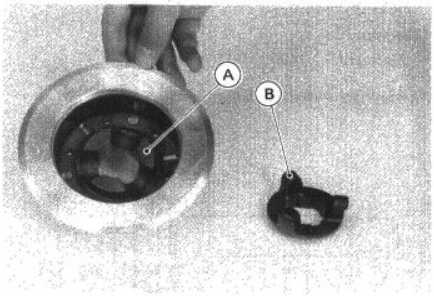

A. Cam B. Cam Follower

Clutch Spring Free Length Measurement

Clutch Spring Free Length
Standard: 33.2 mm
Service Limit: 32.1 mm

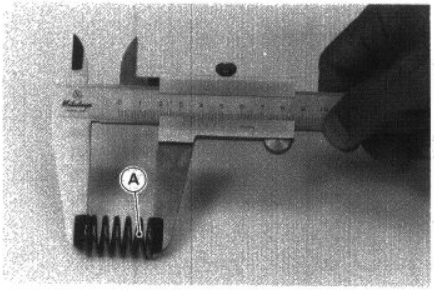

A. Clutch Spring

Engine Lubrication System

Table of Contents

Exploded View

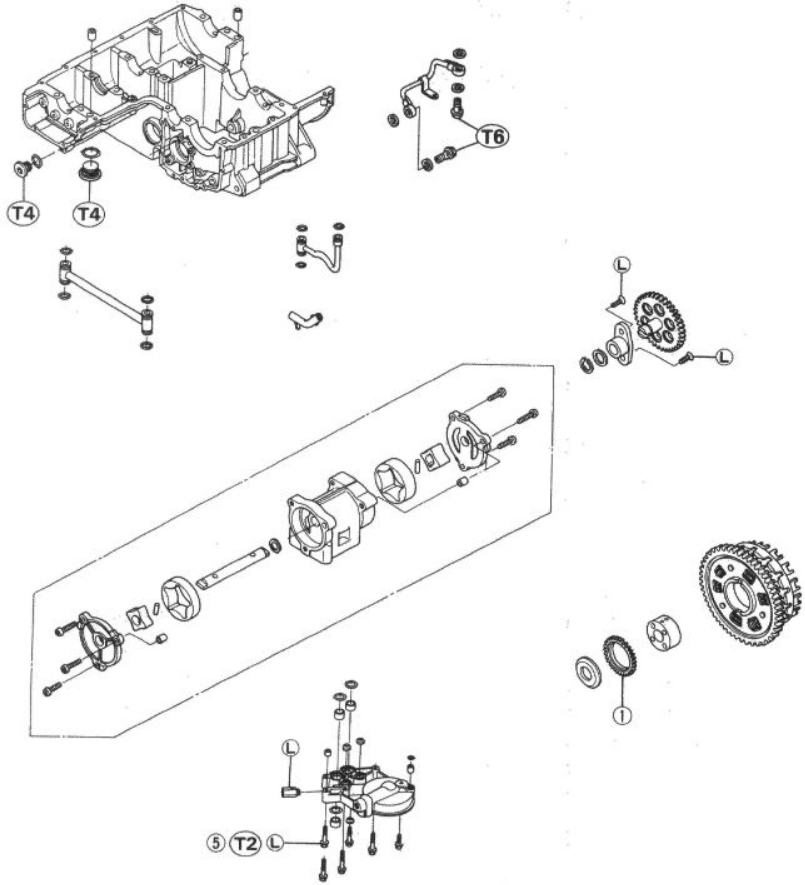

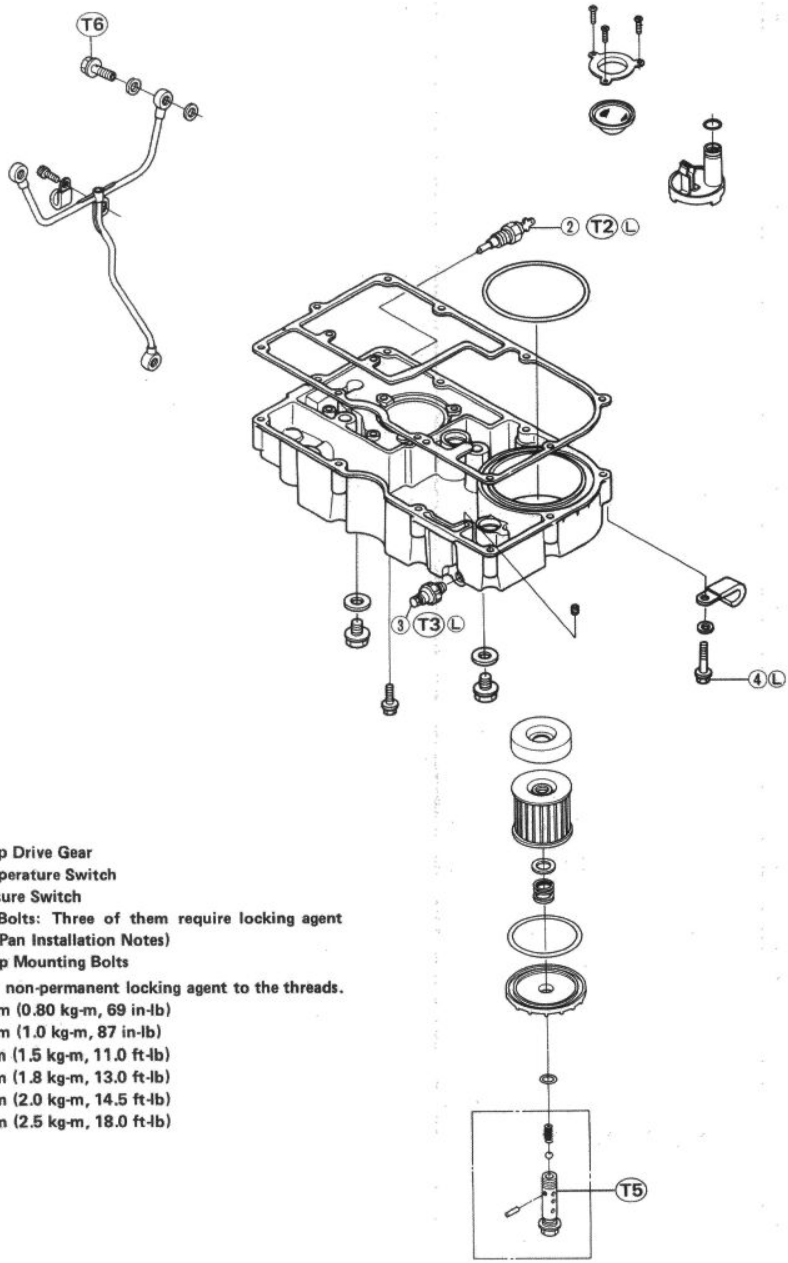

1. Oil Pump Drive Gear
2. Oil Temperature Switch
3. Oil Pressure Switch
4. Oil Pan Bolts: Three of them require locking agent (see Oil Pan Installation Notes)
5. Oil Pump Mounting Bolts

L: Apply a non-permanent locking agent to the threads.
T1: 7.8 N-m (0.80 kg-m, 69 in-lb)
T2: 9.8 N-m (1.0 kg-m, 87 in-lb)
T3: 15 N-m (1.5 kg-m, 11.0 ft-lb)
T4: 18 N-m (1.8 kg-m, 13.0 ft-lb)
T5: 20 N-m (2.0 kg-m, 14.5 ft-lb)
T6: 25 N-m (2.5 kg-m, 18.0 ft-lb)

Engine Oil Flow Chart

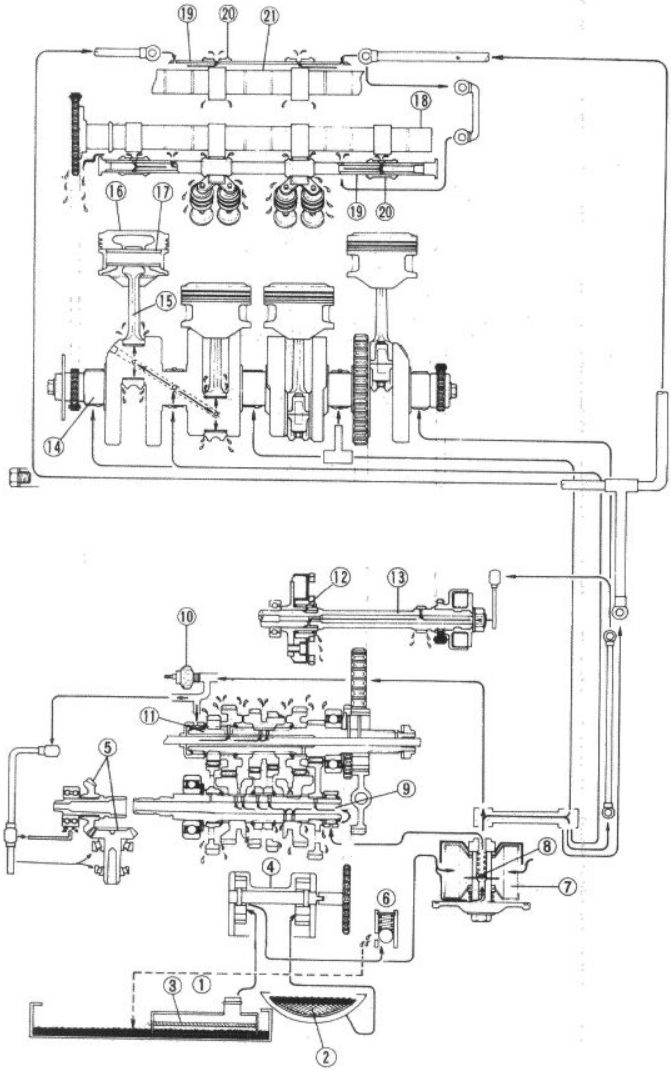

1. Transmission Chamber
2. Screen
3. Screen
4. Oil Pump
5. Front Bevel Gears
6. Relief Valve
7. Oil Filter
8. Bypass Valve
9. Output Shaft
10. Oil Pressure Switch
11. Drive Shaft
12. Starter Clutch
13. Alternator Shaft
14. Crankshaft
15. Connecting Rod
16. Piston
17. Piston Pin
18. Inlet Camshaft
19. Rocker Shaft
20. Rocker Arm
21. Exhaust Camshaft

Engine Oil and Oil Filter

Engine Oil and/or Filter Change

●Engine oil and/or filter change procedure for the ZL900 is the same as ZX900, except following.

○Support the motorcycle in an upright position using a hoist. The ZL900 dose not have a center stand.

○The under cowling is not on this vehicle. Omit removal instructions.

Oil Pan

Oil Pan Removal/Installation Notes

Although an oil cooler is not included in the ZL900, the oil pan removal/installation procedure for the ZL900 is almost the same as for the ZX900.

The procedure for oil cooler should be omitted.

Engine Removal/Installation

Table of Contents

Exploded View

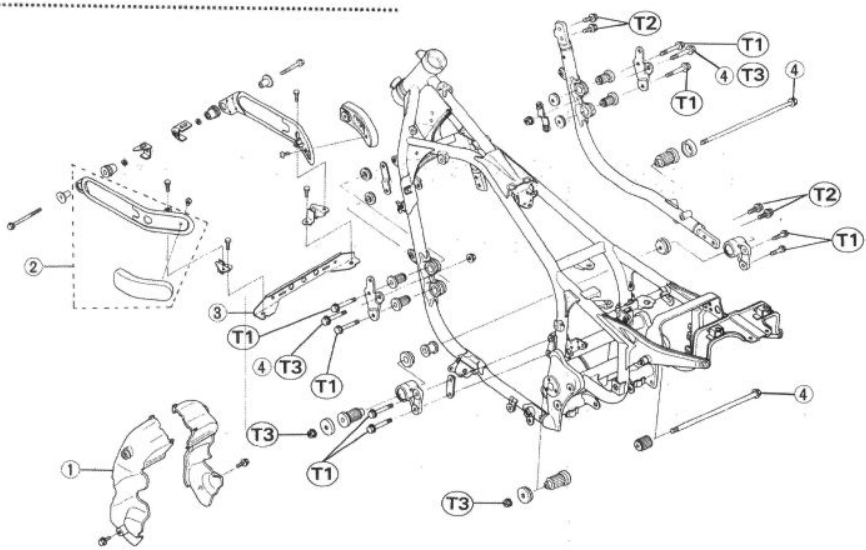

1. Air Baffle Cover
2. Knee Pad
3. Bracket
4. Engine Mounting Bolt

T1: 25 N-m (2.6 kg-m, 19 ft-lb)
T2: 32 N-m (3.3 kg-m, 24 ft-lb)
T3: 34 N-m (3.5 kg-m, 25 ft-lb)

Engine Removal/Installation

Engine Removal

- Position the motorcycle across a hoist to lift the rear wheel off the floor.
- Drain the engine oil (see Engine Oil Change in the Engine Lubrication System chapter).
- Drain the coolant (see Coolant Change in the Cooling System chapter).
- Remove the following:
  - Seat
  - Fuel Tank
  - Radiator
  - Propeller shaft
  - Water Pump and Hoses
  - Mufflers and Exhaust Pipes
  - Air Baffle Cover
  - Ignition Coils
  - Vacuum Switch Valve (US model) and Hoses
  - Carburetors
  - Air Cleaner Housing
  - Rear Master Cylinder Cover
- Disconnect wiring from the engine components, and free them from any clamps.
  - Horn Lead (right side only)
  - Starter Motor Lead
  - Neutral Switch Wire
  - Oil Pressure Switch Wire
  - Oil Temperature Switch Wire
  - Battery Ground Lead
- Unscrew the mounting bolts, and remove the knee pad from the bracket.
- Remove the engine mounting bolts. Support the engine before sliding out the engine mounting bolts.
- Remove the down tube with horn (right side only).
- Remove the engine.

Engine Installation

- Engine installation is the reverse of removal. Note the following.
- Tighten the engine mounting bolts to the specified torque (see Exploded View).
- Fill the engine with engine oil (see Engine Oil Change in the Engine Lubrication System chapter).
- Fill the engine with coolant (see Coolant Change in the Cooling System chapter).
- Adjust the following.
  - Throttle Cable
  - Choke Lever

Crankshaft/Transmission

Table of Contents

B.M. : Base Manual

Exploded View

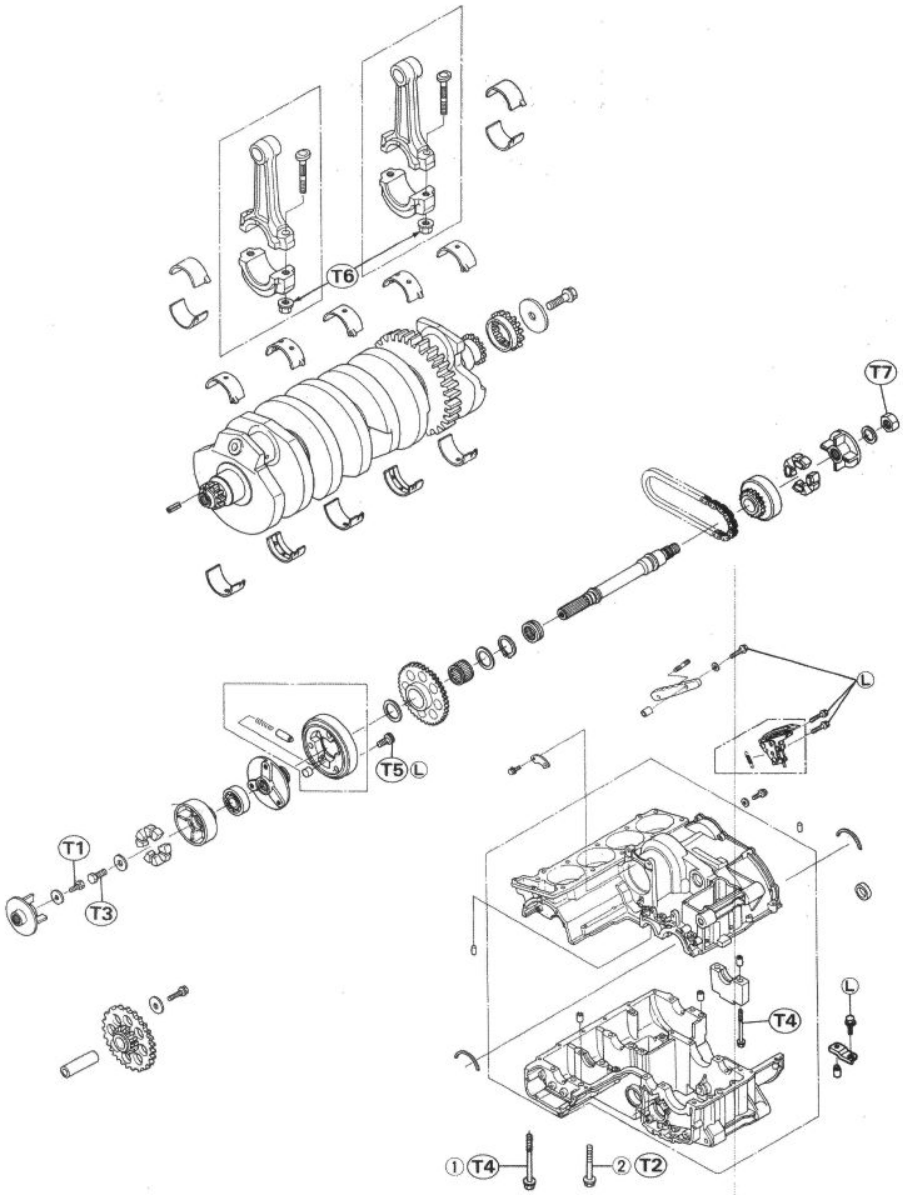

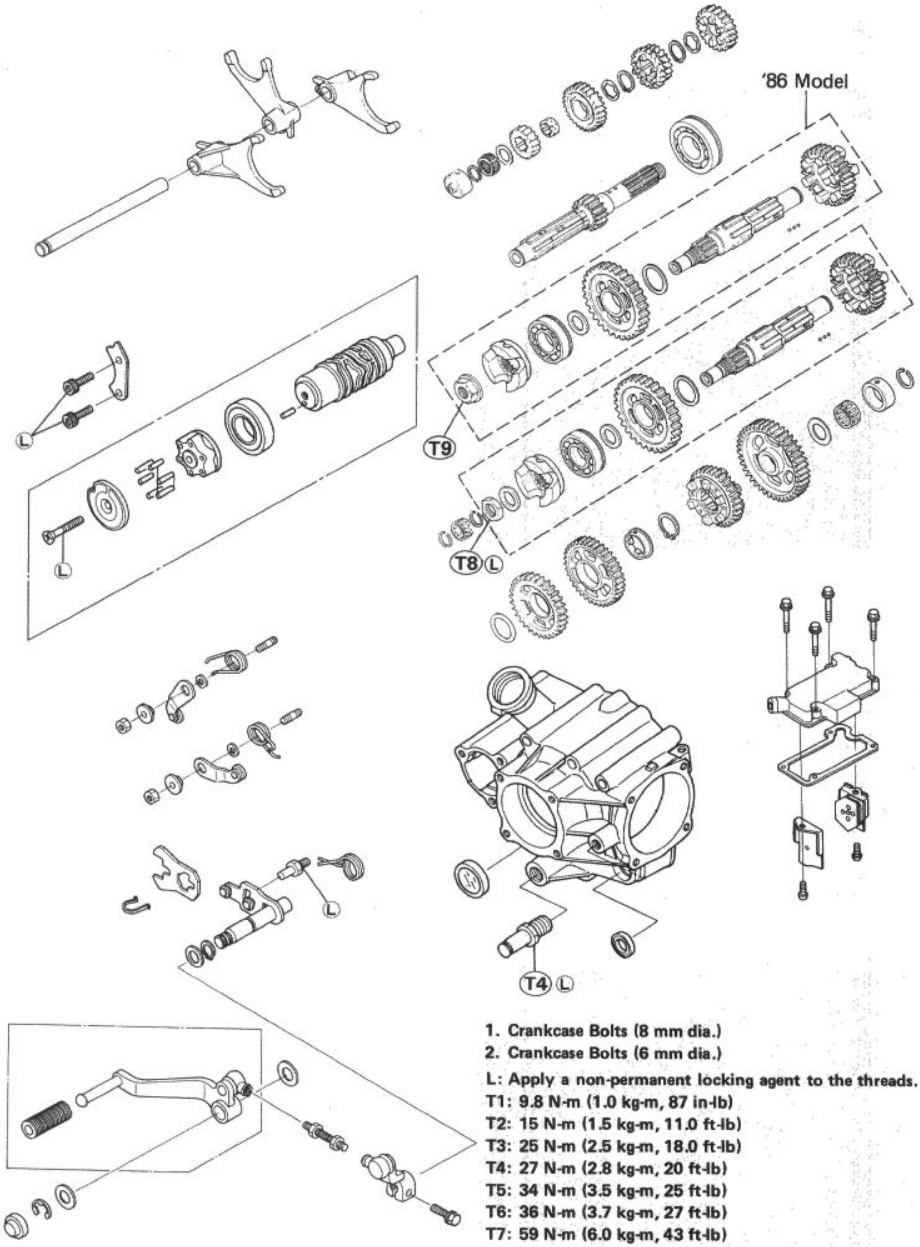

1. Crankcase Bolts (8 mm dia.)
2. Crankcase Bolts (6 mm dia.)

L: Apply a non-permanent locking agent to the threads.
T1: 9.8 N-m (1.0 kg-m, 87 in-lb)
T2: 15 N-m (1.5 kg-m, 11.0 ft-lb)
T3: 25 N-m (2.5 kg-m, 18.0 ft-lb)
T4: 27 N-m (2.8 kg-m, 20 ft-lb)
T5: 34 N-m (3.5 kg-m, 25 ft-lb)
T6: 36 N-m (3.7 kg-m, 27 ft-lb)
T7: 59 N-m (6.0 kg-m, 43 ft-lb)
T8: 120 N-m (12.0 kg-m, 87 ft-lb)
T9: 225 N-m (23.0 kg-m, 166 ft-lb)

Transmission

Transmission External Shift Mechanism:

External Shift Mechanical Removal

- Remove the front bevel gear case (see Front Gear Case Removal).
- Move the shift mechanism arm out of its position on the end of the shift drum, and pull out the shift shaft with the arm, spring, and shaft return spring.

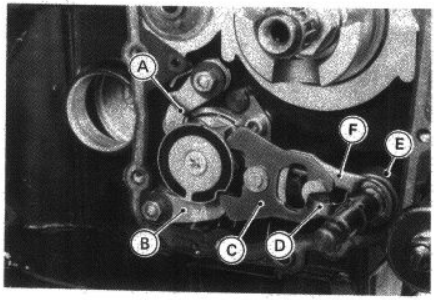

A. Neutral Positioning Lever
B. Gear Positioning Lever
C. Shift Mechanism Arm
D. Arm Spring
E. Return Spring
F. Shift Shaft

- Remove the nuts and take off the neutral positioning lever and gear positioning lever. Each lever has the collor, spring, and washer.

External Shift Mechanism Installation Notes

- The neutral positioning lever and the gear positioning lever are identical. The spring painted blue is for the neutral positioning lever.
- The projected side of the collar must face toward the lever.

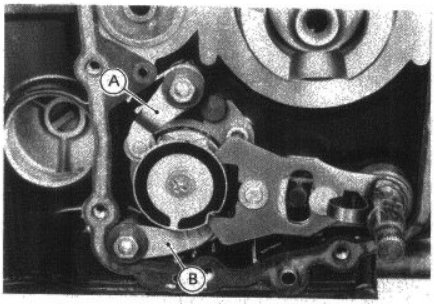

A. Neutral Positioning Lever B. Gear Positioning Lever

- Fill the engine with coolant (see Coolant Change in the Cooling System chapter).
- Check the engine oil level, and add oil if necessary (see Engine Oil Level Inspection in the Engine Lubrication System chapter).

Wheels/Tires

Table of Contents

Exploded View

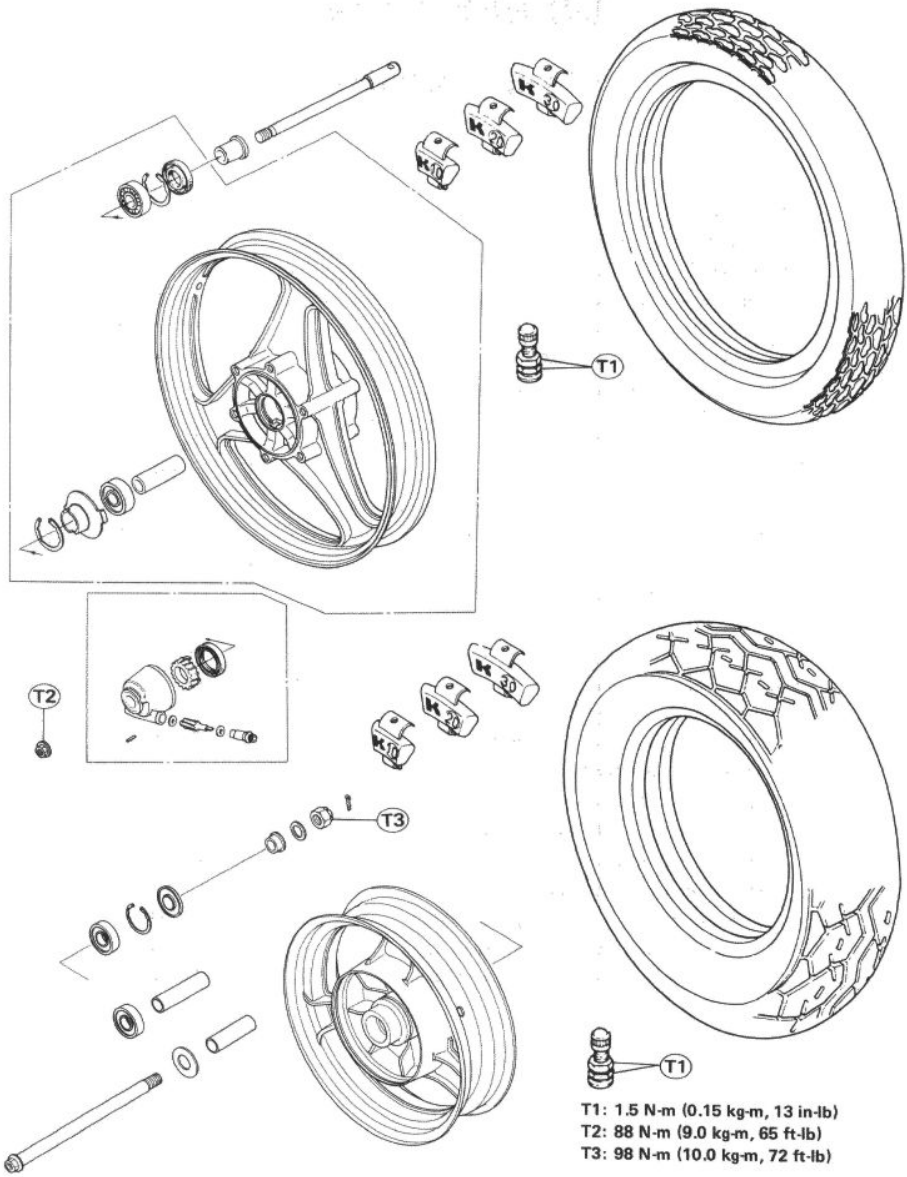

T1: 1.5 N-m (0.15 kg-m, 13 in-lb)
T2: 88 N-m (9.0 kg-m, 65 ft-lb)
T3: 98 N-m (10.0 kg-m, 72 ft-lb)

Specifications

Item		Standard	Service Limit
Wheels:			
Tire tread depth:	Front	4.5 mm	1 mm
	Rear	6.9 mm	2 mm
Standard tire:	Front	100/90-18 56H	– – –
		TUBELESS DUNLOP F17	– – –
	Rear	160/80-15 74H	– – –
		TUBELESS DUNLOP K425	– – –
Tire air pressure:	Front	225 kPa (2.25 kg/cm², 33 psi)	
	Rear	280 kPa (2.80 kg/cm², 40 psi)	

Wheels (Rims)

Front Wheel Removal

●Remove the following parts before front wheel removal.
Speedometer cable lower end
One of the brake caliper's mounting bolts

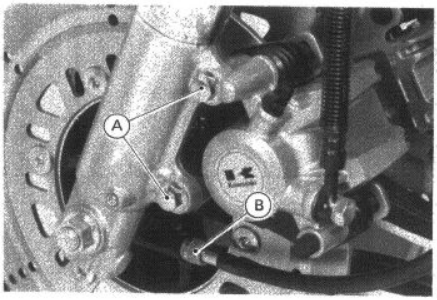

A. Caliper Mounting Bolts B. Speedometer Cable

○Right side axle clamp bolts loosened

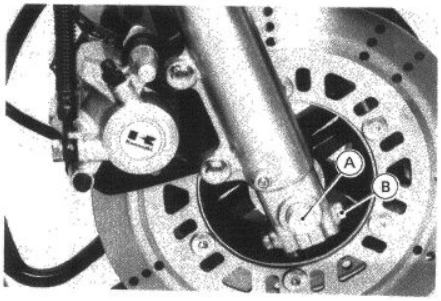

A. Axle B. Axle Clamp Bolt

●Position the motorcycle across a hoist to lift the front wheel off the floor.

CAUTION

○Do not place any type of stand under the exhaust power chamber. This could damage the chamber.

○Axle loosened

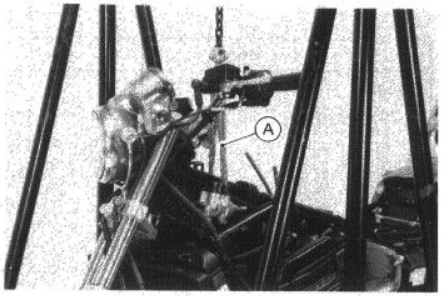

A. Strap

●Remove the caliper (One of the calipers).
●Remove the front wheel.

CAUTION

○Do not lay the wheel down on one of the discs. This can damage or warp the disc. Place blocks under the wheel so that the discs do not touch the ground.

Rear Wheel Removal

●Remove the following parts.
Cotter Pin and Axle Nut (Loosened)
Caliper
Rear Caliper Bracket Mounting Bolt

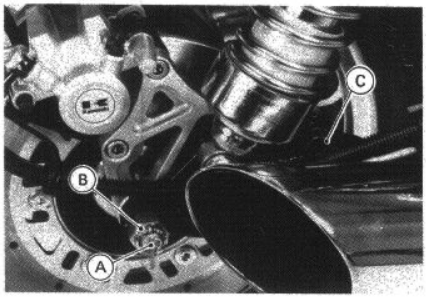

A. Cotter Pin C. Rear Caliper Bracket Mounting Bolt
B. Axle Nut

●Position the motorcycle across a hoist to lift the rear wheel off the floor.

CAUTION

○**Do not place any type of stand under the exhaust power chamber. This could damage the chamber.**

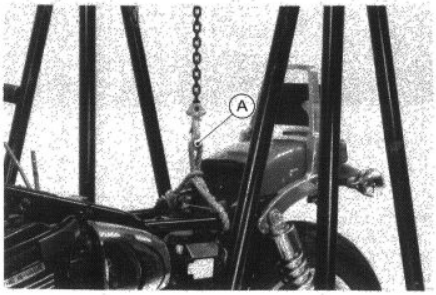

A. Strap

- Remove the axle nut.
- Pull out the axle, rear caliper bracket, cap and collar.
- Slide the rear wheel toward the right to disengage the wheel from the final gear case.

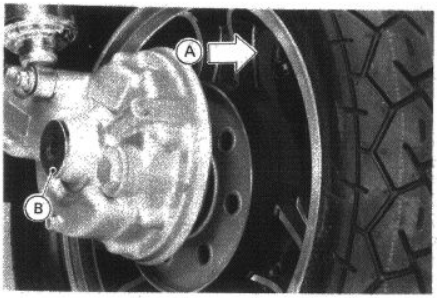

A. Slide the wheel toward the right
B. Cap

CAUTION

○**Do not lay the wheel down on the disc. This can damage or warp the disc.**

Rear Wheel Installation

- Apply grease to the splined portion and the circumference of the rear wheel coupling.

Rear Wheel Coupling

1. Apply grease.

- Be sure to insert the collar on the right side of the hub.
- Tighten the axle nut to the specified torque.
- Replace the axle nut cotter pin with a new one.
- Check the rear brake for weak braking power and brake drag.

Tires

Tire Removal

- Tire removal procedure for ZL900 is the same as for the ZX900 except following.

○Since tires of the ZL900 are out of usable range for the bead breaker (special tool: 57001-1072), use any suitable bead breaker for bead breaking.

Tire Inspection

The following specifications are only those which are unique to the ZL900-A1 model only. For all other data refer to the base manual.

Tire Tread Depth	
Front	
Standard	**4.5 mm**
Service Limit	**1 mm**
Rear	
Standard	**6.9 mm**
Service Limit	**2 mm**

Standard Tire	
Front	
Size	**100/90-18 56H**
Make, Type	**TUBELESS DUNLOP F17**
Rear	
Size	**160/80-15 74H**
Make, Type	**TUBELESS DUNLOP K425**

Tire Air Pressure (when cold)

Front: 225 kPa (2.25 kg/cm^2, 33 psi)
Rear: 280 kPa (2.80 kg/cm^2, 40 psi)

Hub Bearings

Rear Hub Bearing Removal

CAUTION

○**Do not lay the wheel on the ground with the disc facing down. This can damage or warp the disc. Place blocks under the wheel so the disc does not touch the ground.**

- Remove the rear wheel.
- Remove the retaining ring, and remove the coupling.
- Remove the disc mounting Allen bolts and take off the disc.

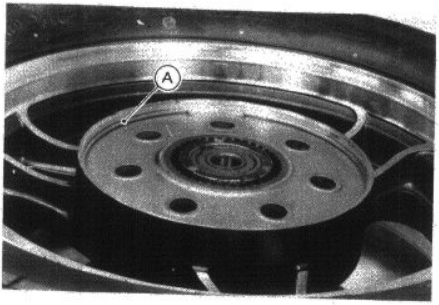

A. Retaining Ring

- Remove the grease seal using a hook, and remove the circlip.

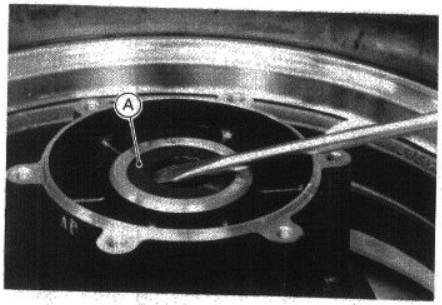

A. Grease Seal

- Insert a metal rod into the hub from the left side, and remove the right side bearing by tapping evenly around the bearing inner race.
- Remove the remaining bearing by tapping evenly around the bearing inner race. The distance collar comes out with the bearing.

Bearing Removal

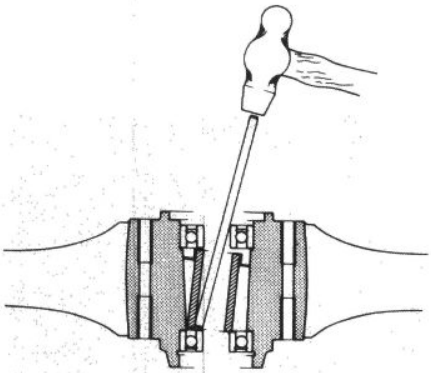

Rear Hub Bearing Installation

- When installating the rear hub, be careful of the following items.

○Before installing the wheel bearings, blow any dirt or foreign particles out of the hub with compressed air to prevent contamination of the bearings.

- Inspect the bearings and replace them if necessary (see Hub Bearing inspection). Install them using the bearing driver (special tools set).

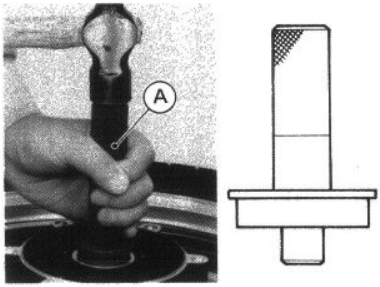

A. Bearing Driver Set: 57001-1129

- Inspect the grease seal and replace if necessary (see Grease Seal Inspection). Press it in until it stops at the circlip in the hole using the same special tools used for bearing installation.
- Tighten the disc mounting Allen bolts to the specified torque. The disc must be installed with the chamfered hole side facing toward the wheel. After installing the disc, check the disc runout (see Disc Wear in Brake chapter).
- Completely clean off any grease that has gotten on either side of the disc with a high flashpoint solvent. Do not use one which will leave an oily residue.

Final Drive

Table of Contents

Exploded View

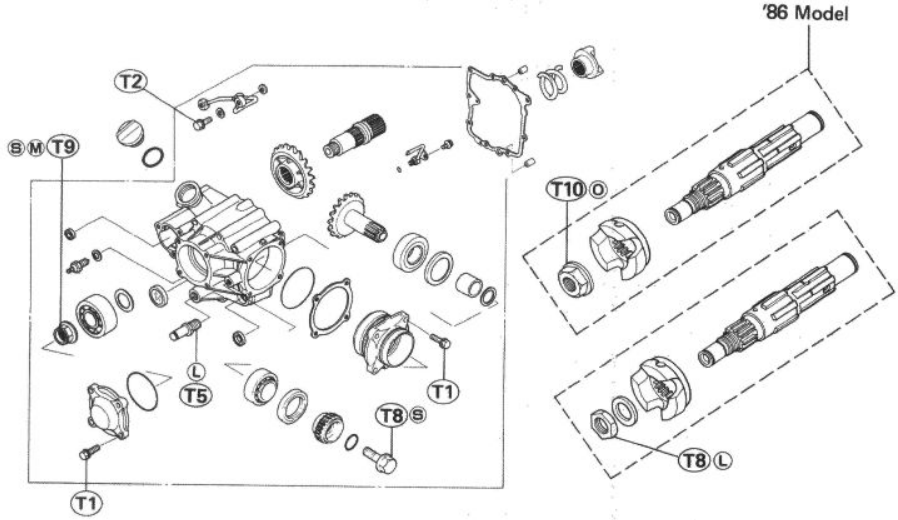

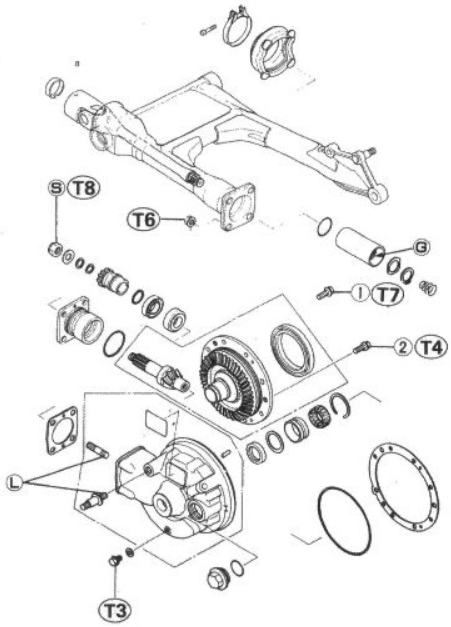

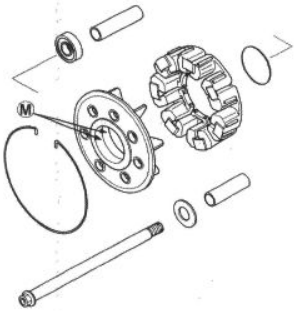

1. Ring Gear Mounting Bolt (10 mm dia.)
2. Ring Gear Mounting Bolts (8 mm dia.)

G: Apply a thin coat of a grease.
L: Apply a non-permanent locking agent to the threads.
M: Apply a thin coat of a molybdenum disulfide grease.
S: Stake the bolt or nut.
T1: 9.8 N-m (1.0 kg-m, 87 in-lb)
T2: 12 N-m (1.2 kg-m, 104 in-lb)
T3: 17 N-m (1.7 kg-m, 12.0 ft-lb)
T4: 24 N-m (2.4 kg-m, 17.5 ft-lb)
T5: 25 N-m (2.5 kg-m, 18.0 ft-lb)
T6: 29 N-m (3.0 kg-m, 22 ft-lb)
T7: 34 N-m (3.5 kg-m, 25 ft-lb)
T8: 120 N-m (12.0 kg-m, 87 ft-lb)
T9: 155 N-m (16.0 kg-m, 115 ft-lb)
T10: 255 N-m (23.0 kg-m, 166 ft-lb)

Specifications

Item		Standard
Final Gear Case Oil:	Grade	API GL-5 hypoid gear oil
	Amount	220 mL
	Viscosity	When above 5°C (41°F) SAE 90
		When below 5°C (41°F) SAE 80
Final Bevel Gear Backlash:		0.13 ~ 0.18 mm
Front Bevel Gear Backlash:		0.13 ~ 0.18 mm

Special Tools

Oil Seal & Bearing Remover: 57001-1058

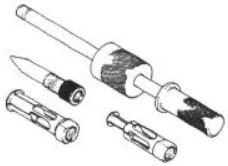

Bearing Driver Set: 57001- 1129

Oil Seal Guide: 57001-264

Damper Cam Holder: 57001-1025

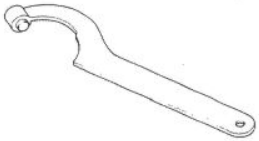

Drive Gear Holder: 57001-1026

Driven Gear Holder: 57001-1027

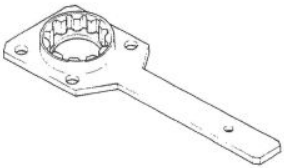

10-4 FINAL DRIVE

Bearing Puller: 57001-135

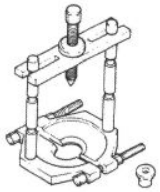

Bearing Driver: 57001-382

Pinion Gear Holder: 57001-1165

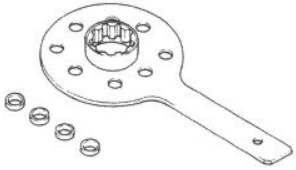

Dial Gauge Holder: 57001-1049

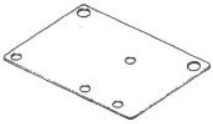

Final Gear Case Oil

Final Gear Case Oil Level Inspection

- According to the Periodic Maintenance Chart, or if the lubricant level is suspected of being low, check the final gear case oil level.
- Using a strap, hold the motorcycle vertical on level ground (see Rear Wheel Removal in the Wheels/Tires chapter).
- Unscrew the filler plug. The oil level is correct if a small amount of oil comes out of the opening.

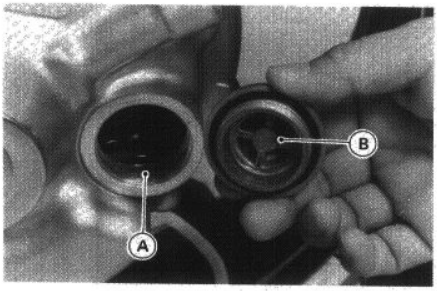

A. Filler Opening B. Filler Cap

★If no oil comes out, first check the final gear case for oil leakage, remedy it if necessary, and add oil through the filler hole. Use the same type and brand of oil that is already in the final gear case.

- Tighten the filler plug to the specified torque (see Exploded View).

Final Gear Case Oil Change

- Warm up the oil by running the motorcycle so that the oil will pick up any sediment and drain easily. Then stop it.
- Using a strap, hold the motorcycle vertical on level ground (see Rear Wheel Removal in the Wheels/Tires chapter).
- Place an oil pan beneath the final gear case, and remove the drain plug.

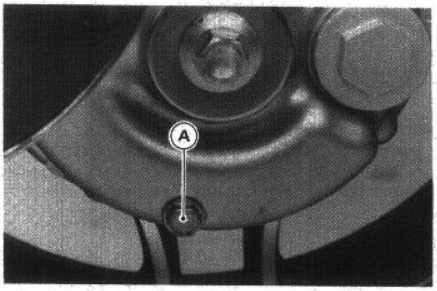

A. Drain Plug

WARNING

○**When draining or filling the final gear case, be careful that no oil gets on the tire or rim. Clean off any oil that inadvertently gets on them with a high flash-point solvent.**

- After the oil has completely drained out, install the drain plug with a new aluminum gasket, and tighten it to the specified torque (see Exploded View).
- Fill the final gear case with the specified oil and quantity.

Final Gear Case Oil:

Amount	**220 mL**
Grade	**API GL-5 hypoid gear oil**
Viscosity:	
When above 5°C (41°F)	**SAE 90**
When below 5°C (41°F)	**SAE 80**

NOTE

○*The term "GL-5" indicates a quality and additive rating. A "GL-6" rated hypoid gear oil can also be used.*

- Be sure the O-ring is in place, and tighten the filler plug to the specified torque (see Exploded View).

Final Bevel Gears

Final Gear Case Removal

- If the final gear case is to be disassembled, drain the final gear case oil (see Final Gear Case Oil Change).
- Remove the rear wheel (see Wheel/Tires chapter).
- Remove the left muffler (see Muffler Removal in the Engine Top End chapter).
- Unscrew the mounting nuts to remove the left shock absorber.
- Remove the final gear case by taking off the mounting nuts. The spring comes off with the case.

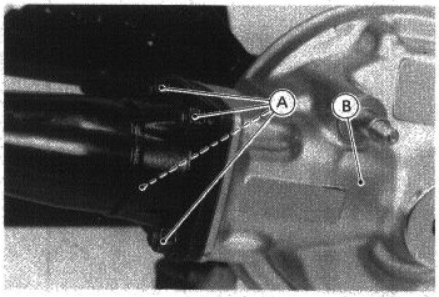

A. Gear Case Mounting Nuts (4)
B. Final Gear Case

NOTE

○*If the final gear case is full of oil, place the case so that the breather hole is on top.*

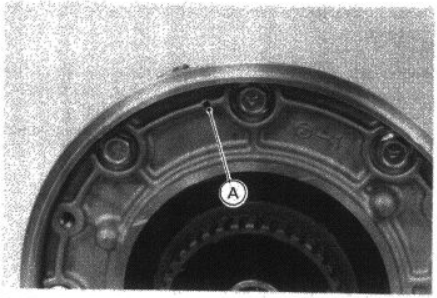

A. Breather Hole

Final Gear Case Installation Notes

- Lubricate the propeller shaft joint (see Propeller Shaft Joint Lubrication).
- Install the spring so that small diameter end faces toward to final gear case.

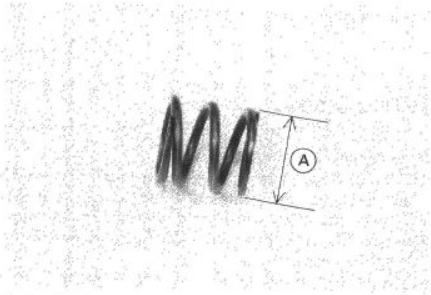

A. Small Diameter End

- Fit the pinion gear splines to the propeller shaft joint while turning the ring gear hub.

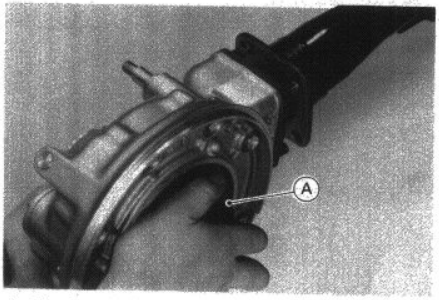

A. Ring Gear Hub

- Tighten the final gear case mounting nuts to the specified torque (see Exploded View).
- Install the rear wheel.
- If the final gear case oil was drained, fill the case with oil (see Final Gear Case Oil Change).

Final Gear Case Disassembly

- Using 6 mm bolts with 1.0 mm pitch threads, jack up the pinion gear assembly.

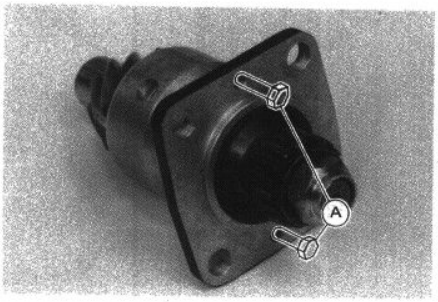

A. Bolts

- Use three cover bolts to remove the ring gear assembly from the gear case.

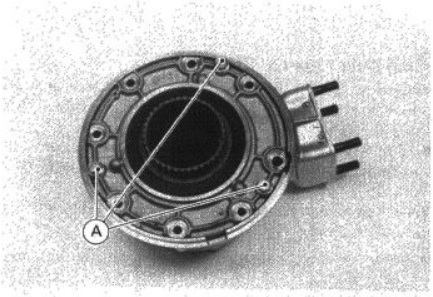

A. Cover Bolts (ϕ8 x p1.25 mm)

- To remove the ring gear oil seal, soak the ring gear assembly in oil and heat the oil to **120 ~ 150°C (248 ~ 302°F)**, and then pry out the seal. Be careful not to scratch the sealing surface on the ring gear hub.

CAUTION

○**Do not heat the case with a torch. This will warp the case.**

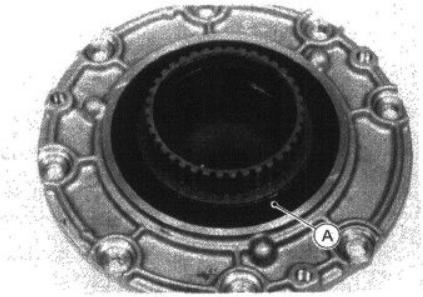

A. Ring Gear Oil Seal

- Remove the needle bearing outer race and oil seal in the final gear case as follows.
- Remove the snap ring.
- Soak the final gear case in oil and heat the oil to approximately **100°C (212°F).**

CAUTION

○**Do not heat the case with a torch. This will warp the case.**

- Pull out the oil seal and bearing outer race together using the oil seal & bearing remover (special tool).

Oil Seal and Bearing Outer Race Removal

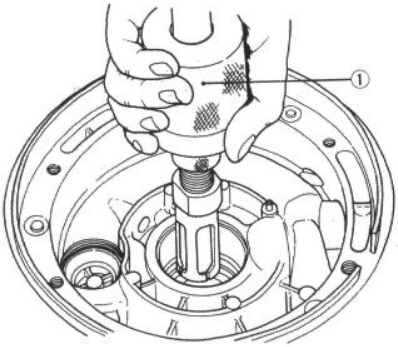

1. Oil Seal & Bearing Remover: 57001-1058

Final Gear Case Assembly Notes

- The ring gear and pinion are lapped as a set in the factory to get the best tooth contact. They must be installed as a pair, never replace one without the other.
- Check and adjust the preload of tapered roller bearing, if necessary (see Pinion Gear Bearing Preload Adjustment).
- When final gear case parts are replaced, the final bevel gears must be adjusted (see Final Gear Backlash and Tooth Contact Adjustment).
- If no parts of the final bevel gear case are replaced, install the shims in the original positions to keep the gear backlash and the tooth contact unchanged.
- Blow the breather hole clean with compressed air.

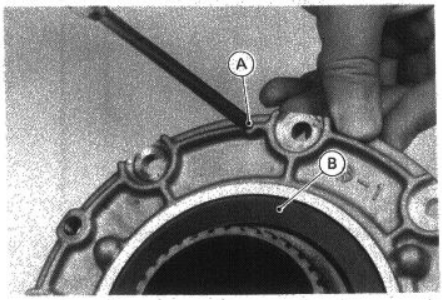

A. Breather Hole B. Ring Gear Assembly

- Align the oil hole in the needle bearing outer race with the oil hole in the final gear case.

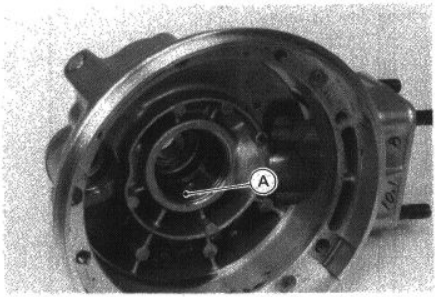

A. Oil Hole

- Apply a non-permanent locking agent to the threads of the cover bolts, and tighten to the specified torque (see Exploded View).
- Apply a non-permanent locking agent to the inner end of each stud and to the oil line plug to prevent oil leakage.

Pinion Gear Removal

- Remove the pinion gear assembly (see Final Gear Case Disassembly).
- Pry open the pinion gear nut.
- Unscrew the pinion gear nut using the pinion gear holder (special tool).

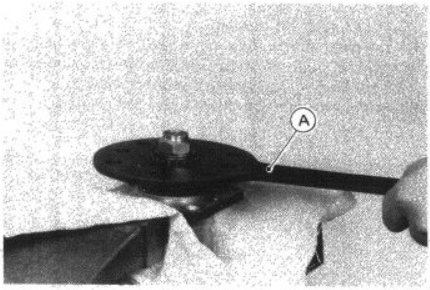

A. Pinion Gear Holder: 57001-1165

- Remove the washer and the shim(s).
- Remove the pinion shaft joint with the O-ring.
- Remove the pinion gear with tapered roller bearing as one unit.
- Drive the tapered roller bearing in the bearing housing and the oil seal using the bearing driver set (special tool: 57001-1129).

Pinion Gear Assembly

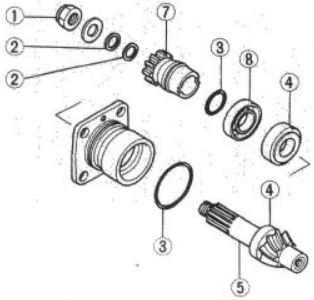

1. Pinion Gear Nut
2. Shim
3. O-ring
4. Tapered Roller Bearing
5. Pinion Gear
6. Washer
7. Pinion Gear Shaft Joint
8. Oil Seal

Pinion Gear Installation

- Installation is the reverse of removal. Note the follows.
- The pinion gear and ring gear are lapped as a set in the factory to get the best tooth contact. They must be replaced as a set.
- Check the tapered roller bearing (see Tapered Roller Bearing Inspection).
- Install the tapered roller bearing using the bearing driver set (special tool: 57001-1129).
- Check and adjust the preload of the tapered roller bearing (see Pinion Gear Bearing Preload Adjustment).
- Check the oil seal (see Oil Seal Inspection).
- Drive the oil seal using the bearing driver set (special tool: 57001-1129).
- Install the pinion gear with the tapered roller bearing as one unit.
- Check the O-ring on the pinion shaft joint for any kind of damage. And replace it if necessary.
- Install the shim(s) and the washer.
- Replace the pinion gear nut with a new one.
- Tighten the pinion gear nut to the specified torque (see Exploded View).
- Stake the pinion gear nut with a punch.

CAUTION

○**When staking the nut and holder, be careful not to apply shock to the pinion and their bearings. Such a shock could damage the pinion and/or bearings.**

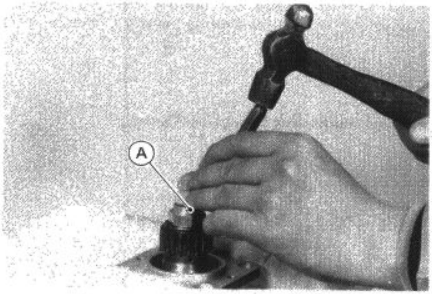

A. Stake the Pinion Gear Nut

- Be sure to check and adjust the bevel gear backlash and tooth contact, when any of the parts which influence these items are replaced (see Final Bevel Gear Adjustment).

Pinion Gear Bearing Preload Adjustment

Preload Measurement:

- Check and adjust the bearing preload in the following cases.

○When any of the parts listed below are replaced with new ones.
Tapered Roller Bearings
Bevel Gears
Bearing Housing
Pinion Gear Joint

○When the pinion gear nut is loosened, even if the purpose is not to replace the parts.

●Assemble the pinion gear bearing housing, and tighten the pinion gear nut to the specified torque. Oil seal installation is not required until the correct bearing preload is obtained.

CAUTION

○To start with, choose a shim or shims so that the bearings are just SNUG with NO play but also with NO preload.

○Any over-preload on the bearings could damage the bearings.

●Apply a little final gear case oil to the bearings, and turn the gear shaft more than 5 turns to allow the bearings to seat.

●Measure the bearing preload. Bearing preload is defined as the force or torque which is needed to start the gear shaft turning.

NOTE

○Preload can be measured either with a spring scale or a beam-type torque wrench. When measured with a spring scale, the preload is designated by force (N, kg), and when measured with a torque wrench, it is designated by torque (N-m, kg-m, in-lb).

Using Spring Scale:

Hook the spring scale on the handle at the point 200 mm from the center of the gear shaft. Hold the bearing housing in a vise so that the gear shaft axis is vertical. Apply force to the handle horizontally and at a right angle to it.

Preload Measurement

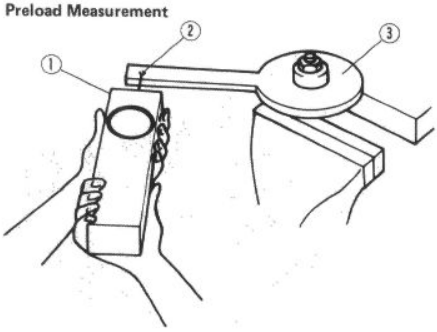

1. Spring Scale
2. Hole
3. Pinion Gear Holder: 57001-1165

★If the preload is out of the specified range, replace the shims under the flat washer, and re-check the preload. Refer to the next paragraph to select suitable shims.

Preloading Bearings

(A) Before tightening

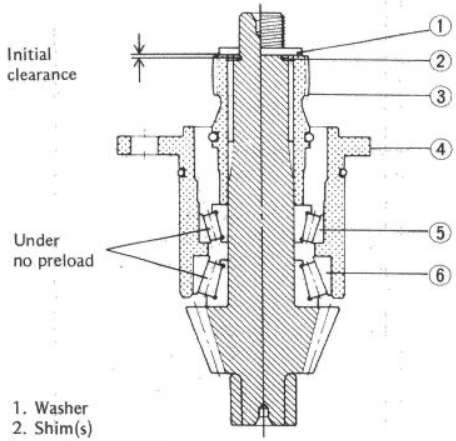

1. Washer
2. Shim(s)
3. Pinion gear joint
4. Bearing housing
5. Tapered roller bearing
6. Tapered roller bearing

(B) After tightening

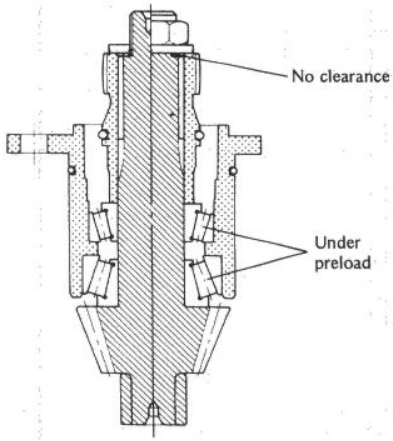

Preload for Pinion Gear Bearings

Using spring scale:

2.9 ~ 4.9 N (0.30 ~ 0.50 kg, 0.7 ~ 1.1 lb)

Using torque wrench:

0.6 ~ 1.0 N-m (0.06 ~ 0.10 kg-m, 5.2 ~ 8.7 in-lb)

Preload Adjustment:

- To increase preload, decrease the thickness of the size of the shim(s).
  To decrease preload increase the thickness of the shim(s).
- Change the thickness a little at a time.
- Re-adjust the bearing preload, and re-adjust if necessary.

Shims for Preload Adjustment (* : Standard)

Thickness	Part Number
0.1	92025-1219
0.2	92025-1220
0.3	92025-1221
0.5	92025-1222
0.6	92025-1223
0.7	92025-1224
0.8	92025-1225
* 0.9	92025-1226
1.0	92025-1227
1.30	92025-1214
1.32	92025-1215
1.34	92025-1216
1.36	92025-1217
1.38	92025-1218

Final Gear Backlash and Tooth Contact Adjustment

The **backlash** (distance one gear will move back and forth without moving the other gear) and **tooth contact pattern** of the bevel gears must be correct to prevent the gears from making noise and being damaged.

When replacing any one of the following parts which influence the backlash and tooth contact of bevel gears, make sure to check and adjust them. First, adjust the backlash of the bevel gears. Second, get the correct tooth contact pattern by replacing shims. Last, check to see if backlash is within the standard. If backlash is out of range, repeat above procedure again.

Parts which change the backlash and tooth contact are:

Ring Gear
Final Gear Case Cover
Pinion Gear
Tapered Roller Bearing
Final Gear Case

NOTE

○*After replacing any one of the parts listed above, install the standard shim both at the ring gear side and the pinion gear side.*

The amount of backlash is influenced by the ring gear position more than by the pinion gear position. Tooth contact location is influenced by pinion gear position more than by ring gear position.

First change ring gear shim(s) until the backlash is correct, then adjust the tooth contact by changing the pinion gear shim(s).

CAUTION

○**The ring gear and pinion gears are lapped as a set at the factory to get the best tooth contact. They must be replaced together.**

Backlash Adjustment:

- Clean any dirt and oil off the teeth of the bevel gears.
- Tighten the final pinion gear bearing housing mounting bolts to the specified torque (see Exploded View).
- Set up a dial gauge against the end of the rear hub coupling.
- Check the backlash while tightening the cover mounting bolt. Stop immediately if the backlash disappears. Then, change the ring gear shim with a thicker one.

Final Gear Case Assembly

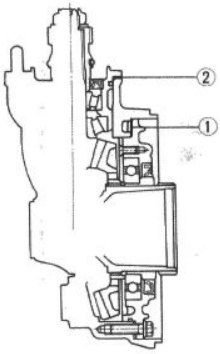

1. Shim(s) for Ring Gear
2. Shim(s) for Pinion Gear

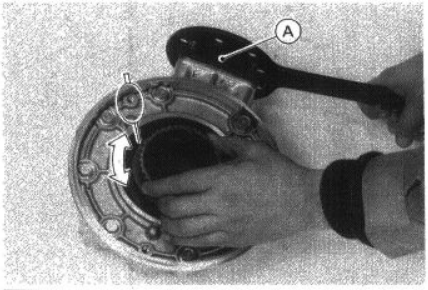

A. Locked

NOTE

○*Backlash, or gear lash is the amount of movement of one gear relative to the other, measured with one gear stationary.*

★If the amount of backlash is out of the standard range, replace the shim(s) of the ring gear and check the backlash. Repeat if necessary.

☆Change the size a little at a time.

Gear Backlash

Standard	**0.13 ~ 0.18 mm**

Shim Sizes for Ring Gear (* : Standard)

Thickness (mm)	Part Number
0.1	92025-1625
0.15	92025-1626
0.2	92025-1627
* 0.3	92025-1628
0.6	92025-1629
0.9	92025-1630
1.2	92025-1631

Tooth Contact Adjustment:

NOTE

○*Check to see that there is no dirt and oil on the gear teeth.*

○*Special compounds are available from automotive supply stores for the purpose of checking differential gear tooth patterns and contact. Use one of these for checking the bevel gears.*

○*The checking compound must be smooth and firm, with the consistency of tooth paste.*

○*Using a paint brush, apply a thin layer to the teeth. If painted too thickly, the exact tooth pattern may not appear.*

- Apply checking compound to 4 or 5 teeth of the pinion gear.
- Set the pinion gear assembly in the final gear case.
- Turn the pinion gear for one revolution, first in the drive direction and then in the reverse (coast) direction.
- Turn with the pinion joint holder (special tool), while creating a drag on the ring gear with the ring nut wrench (special tool).
- Pull out the pinion gear assembly, and check the drive pattern and coast pattern of the bevel gear teeth.

NOTE

○*The tooth contact patterns of both (drive and coast) sides should be centrally located between the top and bottom of the tooth. The drive pattern can be a little closer to the toe and the coast pattern can be somewhat longer and closer to the toe. The drive side of the ring gear tooth is the convex side, and the coast side is the concave side.*

- If the correct tooth contact pattern cannot be obtained, replace shims in the manner described below. Then erase the original tooth contact pattern, and apply checking compound as mentioned in the preceding step.

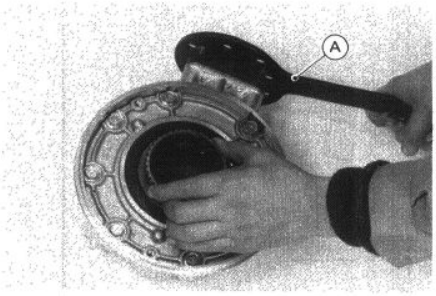

A. Pinion Gear Holder: 57001-1165

Correct Tooth Contact Pattern

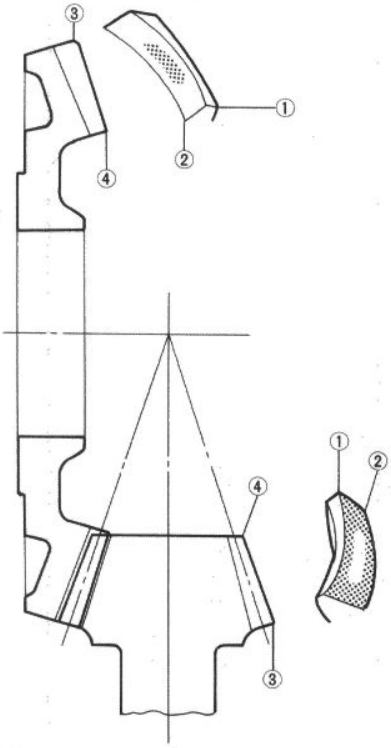

1. Top
2. Bottom
3. Heel
4. Toe

Incorrect Tooth Contact Patters

Example 1: Decrease the size of the pinion gear shim(s) by 0.05 mm to correct the pattern shown below. Repeat in 0.05 mm steps if necessary.

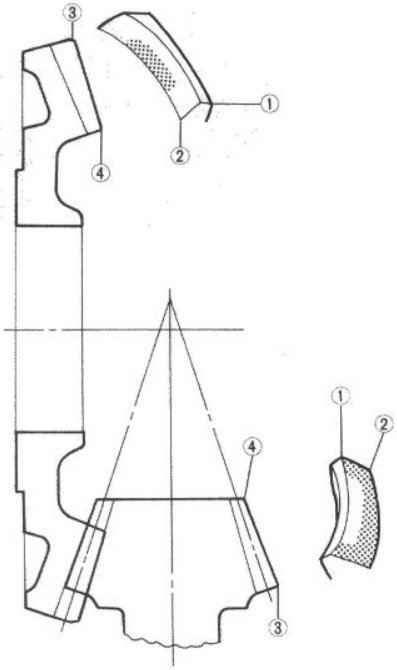

1. Top
2. Bottom
3. Heel
4. Toe

Example 2: Increase the size of the pinion gear shim(s) by 0.05 mm to correct the pattern shown below. Repeat in 0.05 mm steps if necessary.

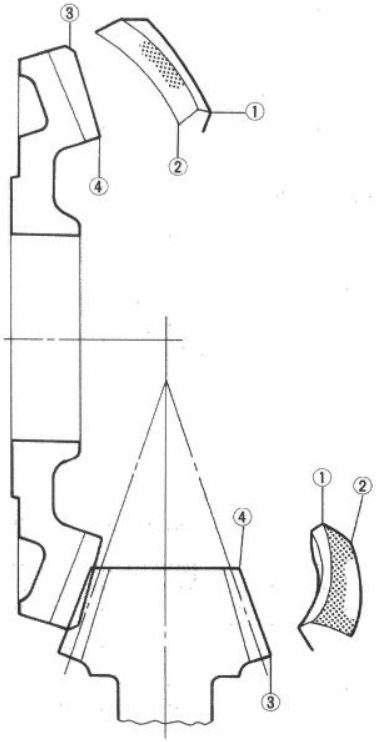

Pinion Gear Shims for Tooth Contact Adjustment (* : Standard)

Thickness (mm)	Part Number
0.15	92025-1052
0.5	92025-1053
0.6	92025-1054
* 0.7	92025-1055
0.8	92025-1056
0.9	92025-1057
1.0	92025-1058
1.2	92025-1059

Pinion Gear Joint Inspection

- Visually inspect the splines of the pinion gear joint.
- ★If they are badly worn or chipped, replace the joint with a new one.

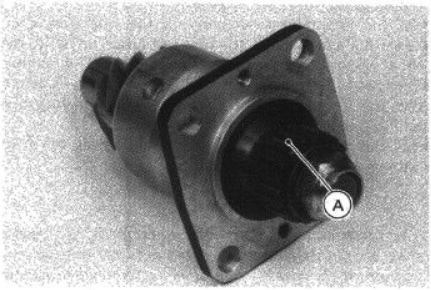

A. Check splined portion.

Bevel Gear Inspection

- Visually check the bevel gears for scoring, chipping, or other damage.

★Replace the bevel gears as a set if either gear is damaged.

Oil Seal Inspection

- Inspect the oil seal.

★Replace it if the lips are misshapen, discolored (indicating that the rubber has deteriorated), hardened, or otherwise damaged.

Tapered Roller Bearing Inspection

- Using a high flash-point solvent, wash the tapered roller bearing.
- Visually check the tapered roller bearing for scoring, chipping, or other damage.

★If there is any doubt as to the condition of a bearing, replace it.

Propeller Shaft

Propeller Shaft Removal

- Remove the final gear case (see Final Gear Case Removal).
- Remove the swing arm (see Swing Arm Removal).
- Remove the propeller shaft from the front bevel gear case as follows.

Disengagement of Propeller Shaft from Bevel Gear Case

(1) Push on the locking pin about 3 mm into the drive gear joint, and hold the pin.

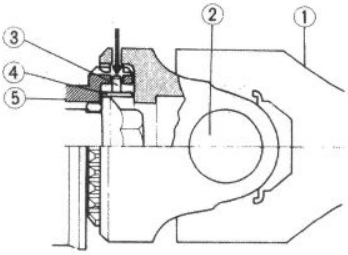

1. Propeller Shaft
2. Universal Joint
3. Locking Pin
4. Spring
5. Driven Gear Joint

(2) Slip the propeller shaft off the joint.

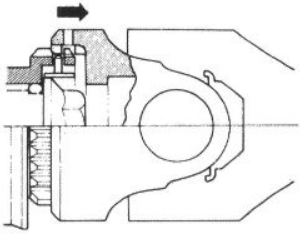

Propeller Shaft Engagement with Bevel Gear Case

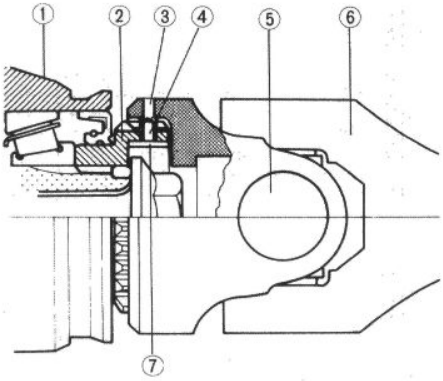

1. Bevel Gear Case
2. Driven Gear Joint
3. Locking Pin Access Hole
4. Locking Pin
5. Universal Joint
6. Propeller Shaft
7. Spring

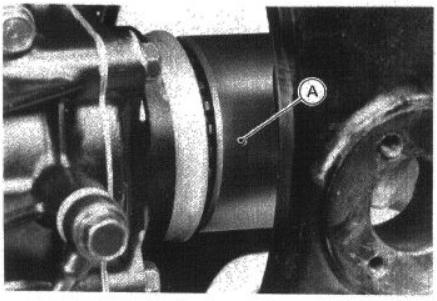

A. Locking Pin Access Hole

- Remove the circlip and washer from the rear end of the propeller shaft.
- Pull out the propeller shaft sliding joint off the propeller shaft, and out of the swing arm.

Propeller Shaft

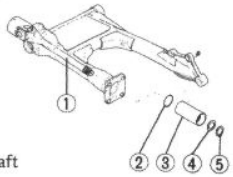

1. Propeller Shaft
2. O-ring
3. Propeller Shaft Sliding Joint
4. Washer
5. Circlip

Propeller Shaft Installation

- Installation is the reverse of removal. Note the following.
- Check the O-ring on the rear end of the propeller shaft for any kind of damage, and replace it if necessary.
- Lubricate the propeller shaft joint (see Propeller Shaft Joint Lubrication).
- After connecting the propeller shaft to the front bevel gear case, pull the propeller shaft rearward to check that the shaft is secured in place by the locking pin.

Propeller Shaft Inspection

- Check that the universal joint works smoothly without rattling or sticking.

★If it does not work smoothly, the needle bearings of the universal joint are damaged. Replace the propeller shaft assembly with a new one.

- Visually inspect the bending of the shaft and the wear of the splined section at the rear end of the shaft.

★If it is bent at all, replace the propeller shaft assembly. Do not attempt to straighten a bent shaft.

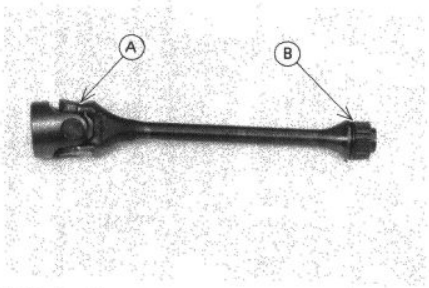

A. Check universal joint.
B. Inspect shaft and and splined portion.

Propeller Shaft Sliding Joint Inspection

- Visually inspect the internal splines of the propeller shaft sliding joint.

★If they are badly worn or chipped, replace the joint with a new one.

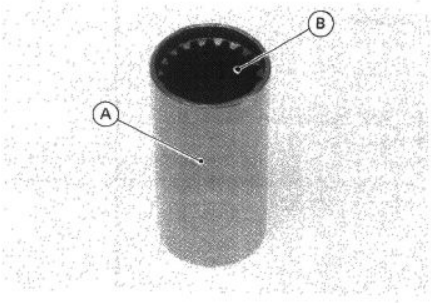

A. Propeller Shaft Joint
B. Check the Splined Portion

Propeller Shaft Joint Lubrication

Usually the center of the swing arm pivot does not coinside with the center of the propeller shaft universal joint. As the rear wheel moves up and down, the distance between the front bevel driven gear and the final pinion gear will change to some extent. To allow the propeller shaft to adjust to these variations in length, a sliding joint is used at the rear end of the propeller shaft. Lubricate the propeller shaft joint in accordance with the Periodic Maintenance Chart.

- Remove the final gear case and propeller shaft (see Final Gear Case Removal and Propeller Shaft Removal).
- Wipe off the old grease from the propeller shaft sliding joint and pinion gear joint.
- Pack the propeller shaft sliding joint with 20 cc (16 grams) of high temperature grease.

Propeller Shaft Sliding Joint Lubrication

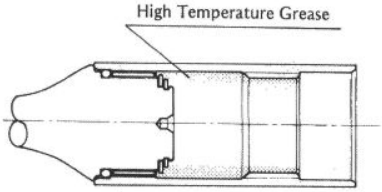

- Wipe off the old grease from the joint at the front end of the propeller shaft and from the driven shaft joint.
- Apply a thin coat of a high temperature grease to the joint splines.
- Install the parts removed.

Front Bevel Gears

Front Bevel Gear Case Removal

- Remove the following parts before front bevel gear case removal.
  - Rear Wheel
  - Final Gear Case
  - Propeller Shaft
- Disconnect the oil pressure switch connector and neutral switch connector.
- Remove the side stand switch (see Switch and Sensors in the Electrical System chapter).
- Remove the shift pedal.
- Remove the clutch slave cylinder (see Clutch Slave Cylinder Removal in the Clutch chapter).
- Pull out the clutch push rod.
- Unscrew the banjo bolt and remove the oil pipe with washers.

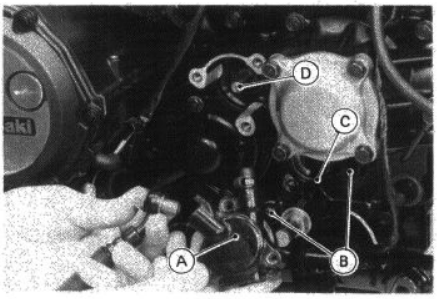

A. Clutch Slave Cylinder
B. Banjo Bolts
C. Oil Pipe
D. Push Rod

- Remove the water pump (see Water Pump Removal in the Cooling System chapter).

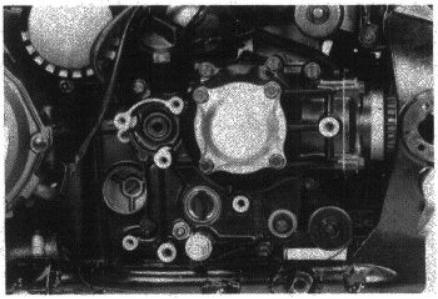

- Unscrew the front bevel gear case mounting bolts and remove the front bevel gear case. The cam follower and the damper spring come off with the bevel gear case.

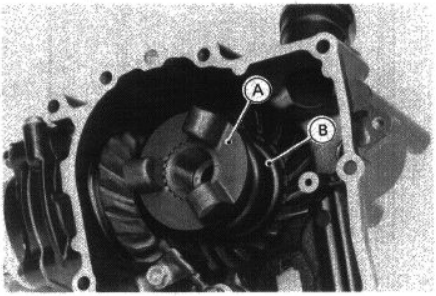

A. Cam Follower
B. Damper Spring

Front Bevel Gear Case Installation

- Installation is the reverse of removal. Note the following.
- For oil seal at the shift shaft, apply a high temperature grease to the seal lip, and use oil seal guide (special tool) to protect the seal during front bevel gear installation.

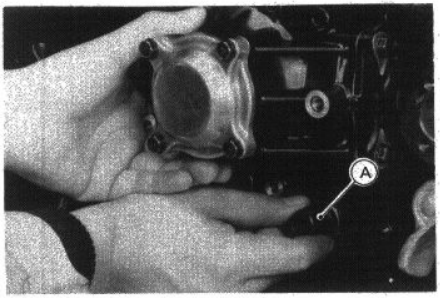

A. Oil Seal Guide: 57001-264

- When installing the oil pipe, replace the flat washers with new ones.

Front Bevel Gear Case Disassembly

●Remove the cam follower and the damper spring.

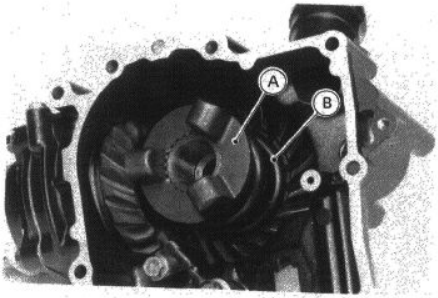

A. Cam Follower B. Damper Spring

●Unscrew the bearing housing mounting bolts and remove the driven shaft bevel gear assembly and shim(s).

Driven Shaft Bevel Gear

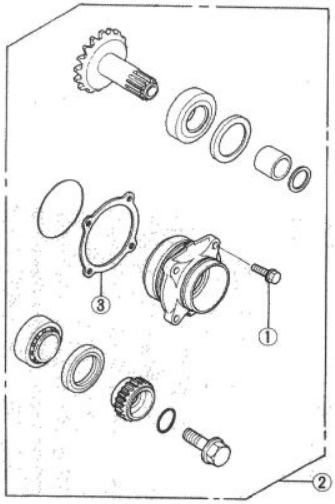

1. Mounting Bolts
2. Driven Shaft Bevel Gear Assembly
3. Shim(s)

●Unscrew the oil pipe clamp bolt from inside the case and remove the oil pipe with the O-ring.

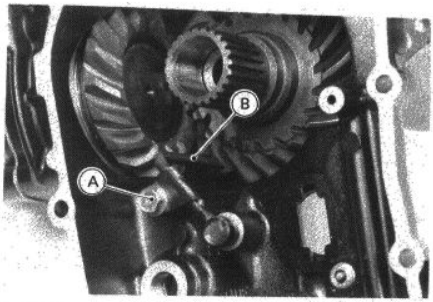

A. Oil Pipe Clamp Bolt B. Oil Pipe

●Unscrew the cap mounting bolts, and remove the cap with the O-ring.

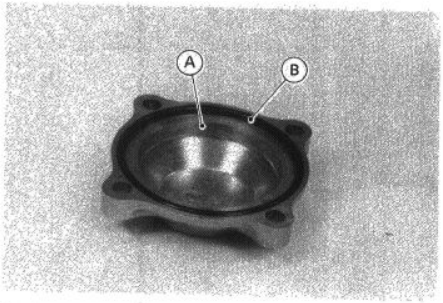

A. Cap B. O-ring

●Pry open the drive gear nut with a small chisel.
●Unscrew the drive gear nut using the drive gear holder (special tool).

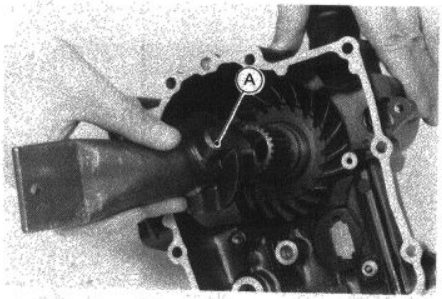

A. Drive Gear Holder: 57001-1026

- Remove the drive shaft with the drive shaft bevel gear and shim(s) from the case.
- Remove the ball bearing using bearing driver set (special tool: 57001-1129).

Drive Shaft Bevel Gear

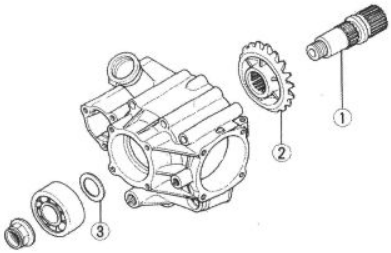

1. Drive Shaft
2. Drive Shaft Bevel Gear
3. Shim(s)

Front Bevel Gear Case Assembly

- Assembly is the reverse of disassembly. Note the following.
- The drive and driven shaft bevel gears are lapped as a set at the factory to get the best tooth contact. They must be replaced as a set.

★Adjust the front bevel gears if necessary (see Front Driven Gear Bearing Preload Adjustment and/or Front Bevel Gear Backlash and Tooth Contact Adjustment).

- Inspect the oil seal (see Oil Seal Inspection).

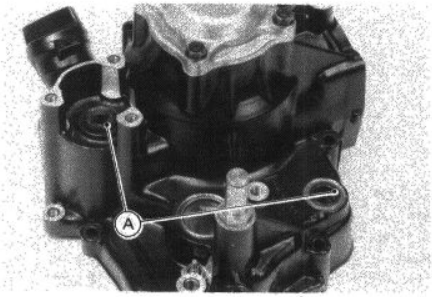

A. Oil Seals

- When installing the oil pipe check the O-ring for any kind of damage, and replace it if necessary.

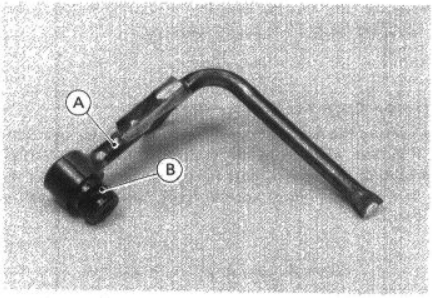

A. Oil Pipe B. O-ring

- Inspect the drive gear bearing for damage (see Drive Gear Bearing Inspection).
- Inspect the drive shaft bevel gear for damage (see Bevel Gear Inspection).
- When installing the drive gear nut apply molybdenum disulfide grease to its threads and seating surface.
- Tighten the drive gear nut to the specified torque (see Exploded View).
- Stake the drive gear nut to secure it in place.

CAUTION

○**When staking the nut, be careful not to apply shock to the shaft and bearings. Such a shock could damage the shaft and/or bearings.**

- When installing the oil pipe, replace the flat washers with new ones.
- Check the O-ring inside the cap for any kind of damage, and replace it if necessary.
- Tighten the cap mounting bolts to the specified torque (see Exploded View).
- Check the O-ring on the bearing housing for any kind of damage, and replace it if necessary.
- Install the bearing housing so that oil hole on the housing aligns with the oil hole in the final gear case.

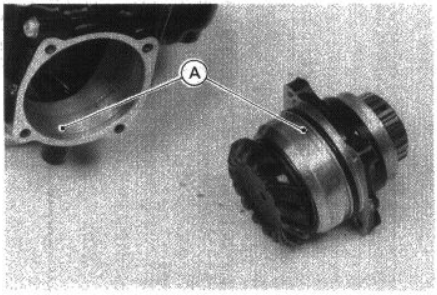

A. Oil Holes

- Tighten the bearing housing mounting bolts to the specified torque (see Exploded View).

Driven Shaft Bevel Gear Removal

- Remove the bearing housing (see Front Bevel Gear Case Removal and Front Bevel Gear Case Disassembly).
- Holding the driven shaft bevel gear assembly with the driven gear holder (special tool), unscrew the driven gear bolt.

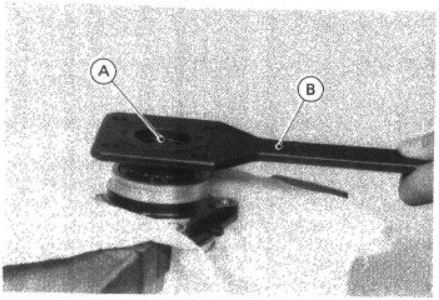

A. Driven Gear Bolt
B. Driven Gear Holder: 57001-1027

- Remove the driven gear joint with its O-ring.
- Remove the driven shaft bevel gear from the bearing housing.
- Remove the collar and the spacer(s) from the driven shaft bevel gear.
- Press the tapered roller bearing and oil seal out of the housing using the bearing driver set (special tool: 57001-1129).
- Remove the tapered roller bearing which is pressed onto the driven shaft, with the bearing puller (special tools).

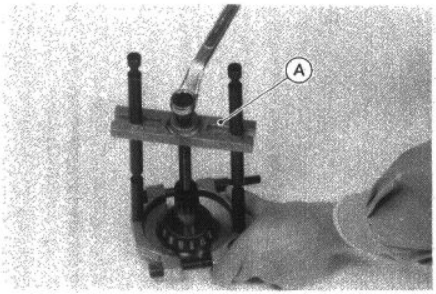

A. Bearing Puller: 57001-135

Driven Gear

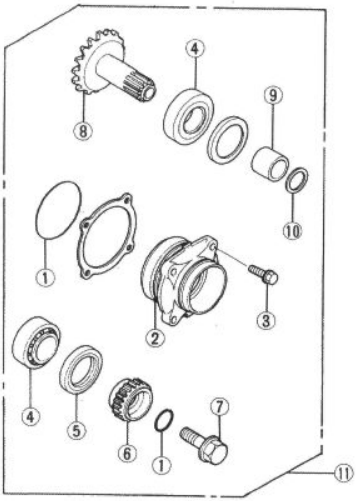

1. O-ring
2. Bearing Housing
3. Bearing Housing Mounting Bolts
4. Tapered Roller Bearing
5. Oil Seal
6. Driven Gear Joint
7. Driven Gear Bolt
8. Driven Shaft Bevel Gear
9. Collar
10. Spacer(s)
11. Driven Shaft Bevel Gear Assembly

Driven Shaft Bevel Gear Installation

- Installation is the reverse of removal. Note the following.
- The drive and driven shaft bevel gears are lapped as a set at the factory to get the best tooth contact. They must be replaced as a set.
- Check the tapered roller bearing for damage (see Tapered Roller Bearing Inspection).
- Install the tapered roller bearing into the case using the bearing driver set (special tool: 57001-1129).
- Apply grease to the remaining tapered roller bearing, and drive it onto the driven shaft using the bearing driver (special tool).

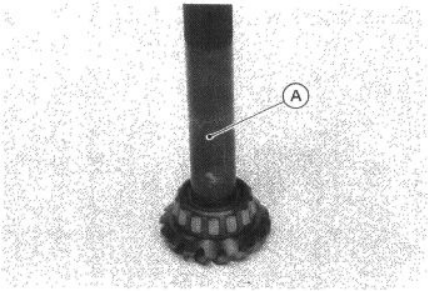

A. Bearing Driver: 57001-382

- Check and adjust the preload of the tapered roller bearing if necessary (see Front Driven Gear Bearing Preload Adjustment).
- Check the oil seal (see Oil Seal Inspection).
- Using the bearing driver set (special tool: 57001-1129), press the oil seal in until the face of the seal is level with the end of the bearing housing hole.
- Check the O-ring in the driven gear joint for any kind of damage, and replace it if necessary.
- Tighten the driven gear bolt to the specified torque (see Exploded View).
- Stake the driven gear bolt to prevent it from loosening.

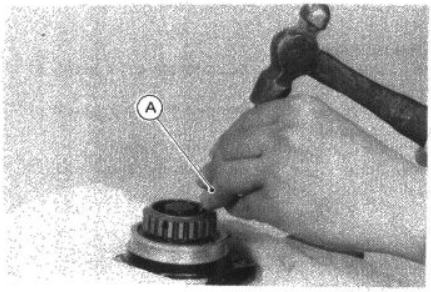

A. Stake the Bolt.

CAUTION

○**When staking the bolt, be careful not to apply shock to the driven shaft bevel gear and their bearings. Such a shock could damage the driven shaft and/or bearings.**

Damper Cam Removal/Installation Notes

- Remove the retainers and needle bearing.

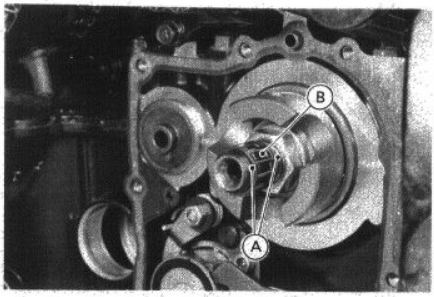

A. Retainers B. Needle Bearing

- Holding the damper cam with the damper cam holder (special tool: 57001-1025), unscrew the damper cam nut.
- Inspect the damper cam (see Damper Cam Inspection).
- When installing the damper cam, tighten the damper cam nut to the specified torque (see Exploded View).
- Inspect the needle bearing for any kind of damage, and replace it if necessary.

Front Driven Gear Bearing Preload Adjustment

Preload Measurement:

- Adjust the bearing proload in the following cases.
  - ○When one or both of the tapered roller bearings, bearing housing, and driven shaft bevel gear are replaced with new ones.
  - ○When the driven gear bolt is loosened.
- Assemble the driven shaft bevel gear assembly, and tighten the drive gear nut to the specified torque (see Exploded View). Do not install the oil seal until the correct bearing preload is obtained.

CAUTION

○**To start with, choose a shim or shims so that the bearings are just SNUG with NO play but also with NO preload.**

○**Any over-preload on the bearings could damage the bearings.**

- Apply a little engine oil to the bearings, and turn the gear shaft more than 5 turns to allow the bearings to seat.
- Measure the bearing preload. Bearing preload is defined as the force or torque which is needed to start the gear shaft turning.

NOTE

○*Preload can be measured either with a spring scale or a beam-type torque wrench. When measured with a spring scale, the preload is designated by force (N, kg), and when measured with a torque wrench, it is designated by torque (N-m, kg-m, in-lb).*

Using Spring Scale:

Hook the spring scale on the handle at a point 200 mm from the center of the gear shaft. Hold the bearing housing in a vise so that the gear shaft axis is vertical. Apply force to the handle horizontally and at a right angle to it.

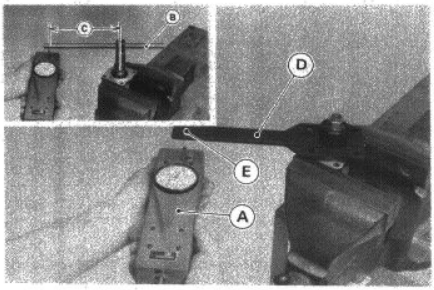

A. Spring Scale
B. Handle of Wrench
C. 200 mm
D. Driven Gear Holder: 57001-1027
E. Hole

★If the preload is out of the specified range, replace the shim(s), and re-check the preload. Refer to the next paragraph to select shims.

Preload for Driven Bevel Gear Shaft Bearings

Using spring scale:

2.4 ~ 5 N (0.25 ~ 0.50 kg, 0.6 ~ 1.0 lb)

Using torque wrench:

0.5 ~ 1.0 N-m (0.05 ~ 0.10 kg-m, 4 ~ 9 in-lb)

Bearing Preloading Mechanism

(A) Before Tightening

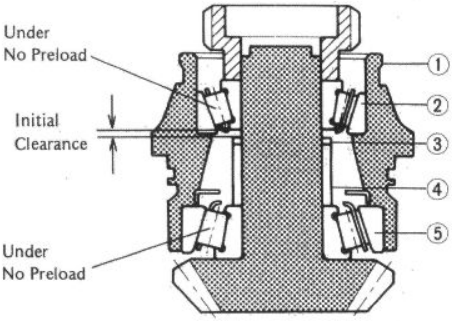

(B) After Tightening

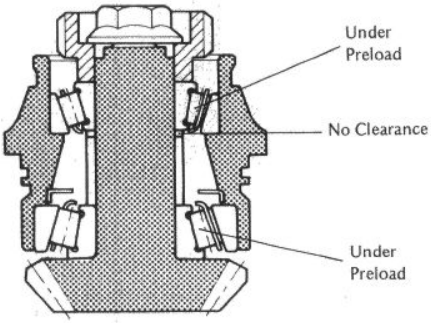

1. Bearing Housing
2. Tapered Roller Bearing
3. Spacer
4. Collar
5. Tapered Roller Bearing

Preload Adjustment:

- To increase preload, decrease the stack length of the collar and spacer(s).
  To decrease preload increase the stack length of the collar and spacer(s).
- Change the stack length a little at a time.
- Re-check the bearing preload, and re-adjust as necessary.

Collars for Preload Adjustment (*: Standard)

Length (mm)	Part Number
22.8	92027-1152
22.9	92027-1153
23.0	92027-1154
23.1	92027-1155
23.2	92027-1156
23.3	92027-1157
23.4	92027-1158
* 23.5	92027-1159
23.6	92027-1160
23.7	92027-1161
23.8	92027-1162
23.9	92027-1163
24.0	92027-1164
24.1	92027-1165

Spacers for Preload Adjustment (•: Standard)

Thickness (mm)	Part Number
1.70	92025-1072
1.72	92025-1073
1.74	92025-1074
* 1.76	92025-1075
1.78	92025-1076
1.80	92025-1077

Front Bevel Gear Backlash and Tooth Contact Adjustment

Improper backlash and/or tooth contact of bevel gears lead to noise and damage of gears.

When replacing any one of the parts which influence the backlash and tooth contact of the bevel gears, make sure to check and adjust them. First, adjust the backlash. Second, get the correct tooth contact. Last, check to see if backlash is within the standard. If backlash is out of range, repeat above procedure again. Backlash and tooth contact adjustments for the bevel gears are accomplished by moving the bevel gear(s) closer to or away from each other. This is done by changing thickness of the shims between each bearing housing and the front bevel gear case.

Parts which change the backlash and tooth contact are
Front bevel gear case
Drive and driven shaft bevel gears
Tapered roller bearings
Bearing housings

Backlash Adjustment:

- Clean any dirt and oil off the bevel gear teeth.
- Install the drive and driven shaft assemblies into the front bevel gear case. Install the standard shim (see the shim tables) between each bearing housing and the front bevel gear case, and tighten the drive gear nut to the specified torque (see Exploded View).
- Using two 6 mm bolts which are used to mount the front bevel gear case on the engine, and two 6 mm nuts (any 6 mm diameter with 1.0 mm pitch threads will work); install the dial gauge holder (special tool).
- Hold the drive gear steady.

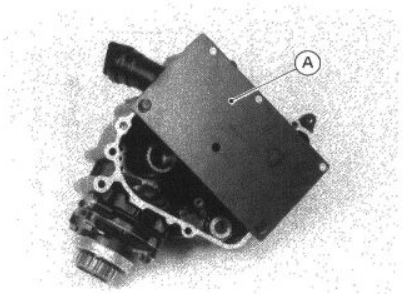

A. Dial Gauge Holder: 57001-1049

- Check the backlash while tightening the driven gear bearing housing mounting bolts. Stop immediately if the backlash disappears. Then, replace the shim at the drive gear housing and/or the shim at the driven gear housing.

NOTE

○*Backlash, or gear lash is the amount of movement of one gear relative to the other, measured with one gear stationary.*

Front Bevel Gear Backlash

Standard **0.13 – 0.18 mm**

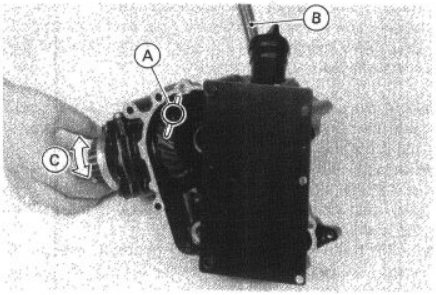

A. Dial Gauge C. Move.
B. Hold.

*If the backlash is incorrect, replace the shim at the drive gear housing and/or the shim at the driven gear housing, and recheck the backlash.

Shims for Drive Shaft Bevel Gear (* : Standard)

Thickness (mm)	Part Number
0.10	92025-1016
0.15	92025-1017
0.20	92025-1018
* 0.30	92025-1019
0.60	92025-1013
0.90	92025-1014
1.20	92025-1015

Shims for Driven Shaft Bevel Gear (* : Standard)

Thickness (mm)	Part Number
0.10	92025-1606
0.15	92025-1607
0.50	92025-1608
0.60	92025-1609
* 0.70	92025-1610
0.80	92025-1611
0.90	92025-1612
1.00	92025-1613
1.20	92025-1614

Tooth Contact Adjustment:

- Remove the dial gauge and its holder from the gear case.
- Clean any dirt and oil off the teeth of the bevel gears.
- Apply checking compound to 4 or 5 teeth of the driven gear.

NOTE

○*Apply the checking compound to the teeth in a thin, even coat with a fairly stiff paint brush. If painted too thickly, the exact tooth pattern may not appear.*
○*The checking compound must be smooth and firm, with the consistency of tooth paste.*
○*Special compounds are available from automotive supply stores for the propose of checking differential gear tooth patterns and contact. Use this for checking the bevel gears.*

- Turn the driven gear for 3 or 4 revolutions in the drive and reverse (coast) directions, while creating a drag on the drive gear.
- Check the drive pattern and coast pattern of the bevel gear teeth. The tooth contact patterns of both drive and coast sides should be centrally located between the top and bottom of the tooth.

★If the tooth contact pattern is incorrect, replace the shims, as shown. Then erase the tooth contact patterns, and check them again. Also check the backlash every time the shims are replaced. Repeat the shim change procedure as necessary.

Correct Tooth Contact Pattern

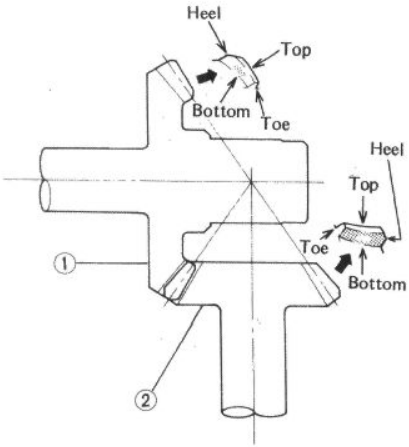

1. Drive Shaft Bevel Gear
2. Driven Shaft Bevel Gear

Incorrect Tooth Contact Patterns

Example 1: Decrease the thickness of the shim pack at the drive gear housing by 0.05 mm, and increase the thickness of the shim pack at the driven gear housing by 0.1 mm to correct the pattern.

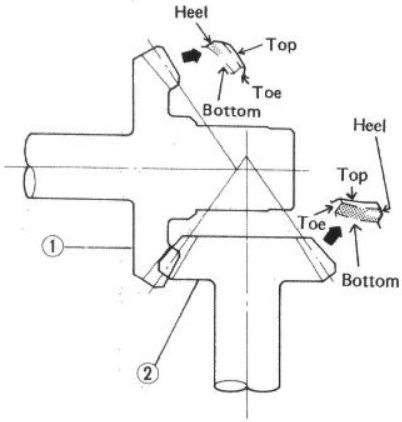

Example 2: Increase the thickness of the shim pack at the drive gear housing by 0.05 mm, and decrease the thickness of the shim pack at the driven gear housing by 0.1 mm to correct the pattern.

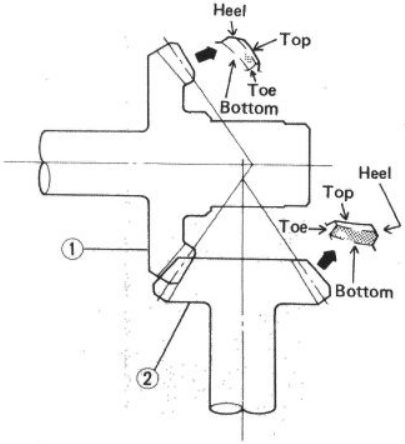

1. Drive Shaft Bevel Gear
2. Driven Shaft Bevel Gear

Bevel Gear Inspection

- Visually check the bevel gears for scoring, chipping, or other damage.

★Replace the bevel gears as a set if either gear is damaged.

Oil Seal Inspection

- Inspect the oil seal.

★Replace it if the lips are misshapen, discolored (indicating that the rubber has deteriorated), hardened, or otherwise damaged.

Tapered Roller Bearing Inspection

- Using a high flash-point solvent, wash the tapered roller bearing.
- Visually check the tapered roller bearing for scoring, chipping, or other damage.

★If there is any doubt as to the condition of a bearing, replace it.

Drive Gear Bearing Inspection

- Disassembly the front bevel gear case (see Front Bevel Gear Case Disassembly).
- Visually inspect the bearings for abrasion, color change, or other damage.

★If there is any doubt as to the condition of a bearing, replace it.

Damper Cam Inspection

- Disassemble the damper cam (see Damper Cam Removal/Installation Notes).
- Visually inspect the cam damper, cam follower, and spring.

★Replace any parts that appear damaged.

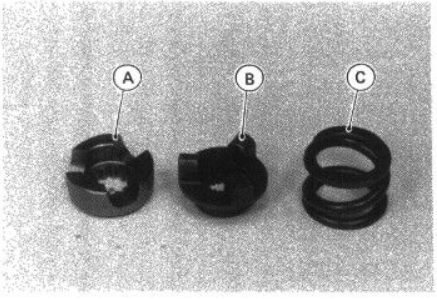

A. Damper Cam
B. Cam Follower
C. Spring

Brakes

Table of Contents

Exploded View

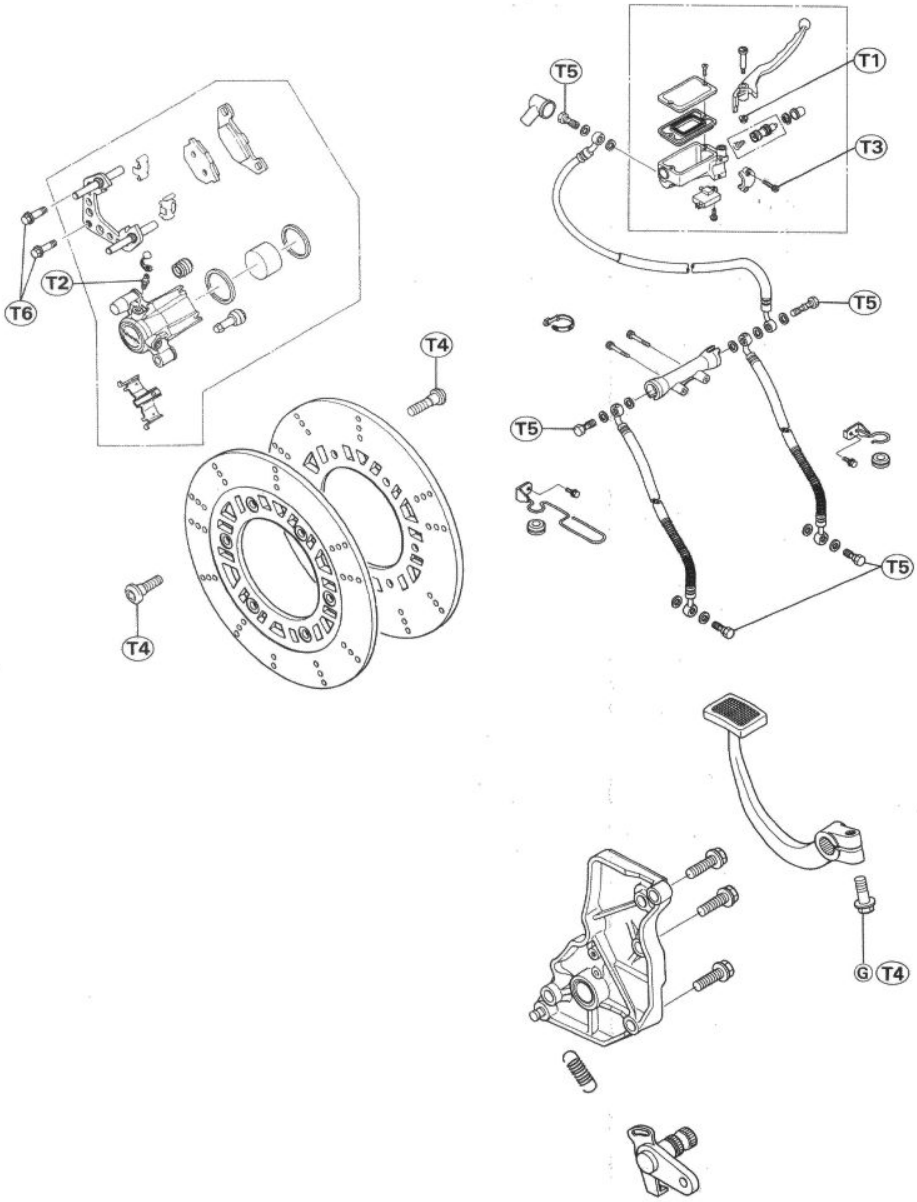

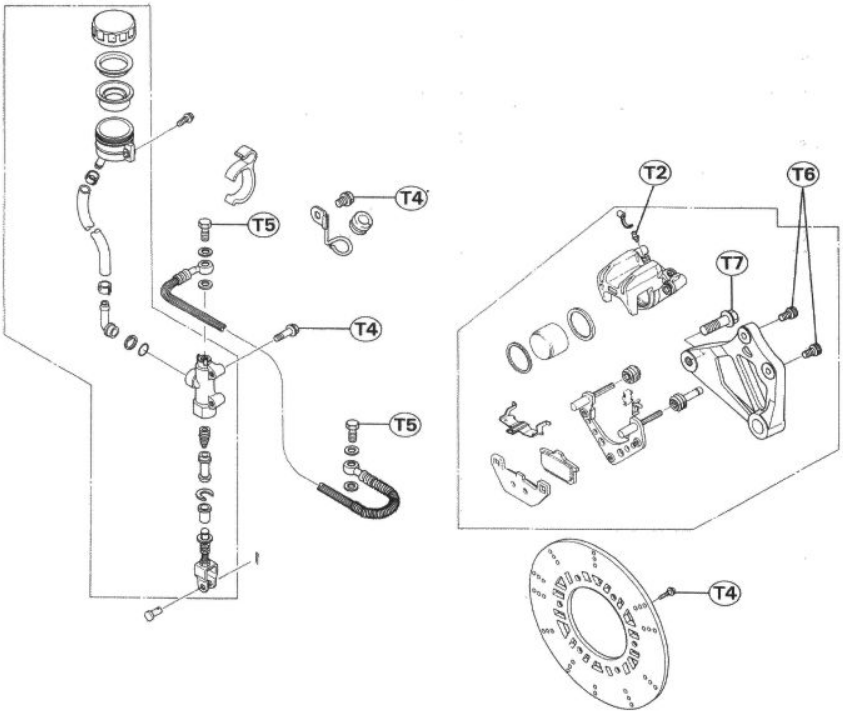

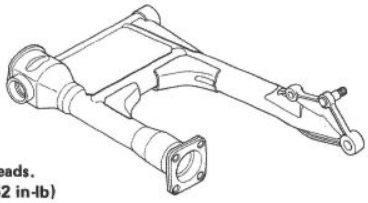

G: Apply grease to the threads.
T1: 5.9 N-m (0.60 kg-m, 52 in-lb)
T2: 7.8 N-m (0.80 kg-m, 69 in-lb)
T3: 11 N-m (1.1 kg-m, 95 in-lb)
T4: 23 N-m (2.3 kg-m, 16.5 ft-lb)
T5: 29 N-m (3.0 kg-m, 22 ft-lb)
T6: 32 N-m (3.3 kg-m, 24 ft-lb)
T7: 69 N-m (7.0 kg-m, 51 ft-lb)

Specifications

The following specifications are only those that are unique to the ZL900 model. For all other data refer to the base manual.

Item	Standard	Service Limit
Brakes:		
Pad lining thickness: Front and Rear	5.0 mm	1 mm
Brake pedal position	about 12 mm	— — —
Disc runout:	Under 0.2 mm	0.3 mm

Brake Adjustment

Rear Brake:

Disc and disc pad wear is automatically compensated for and has no effect on brake pedal action. However, the rear master cylinder clevis position may occasionally require adjustment in case of disassembly. If the brake pedal has a soft, or "spongy feeling", check the brake fluid level in the reservoir and bleed the air from the brake line (see Bleeding the Brake).

NOTE

○*Check the brake fluid level in accordance with the Periodic Maintenance Chart.*

Rear Master Cylinder Clevis Position Inspection

•When the brake pedal is in its rest position, measure the length Ⓐ indicated in the figure.

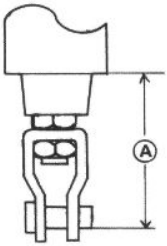

Length Ⓐ

Standard: 45 – 47 mm

★If the length Ⓐ is not within the specified length, adjust a nut. (see Rear Master Cylinder Clevis Position Adjustment).

Rear Master Cylinder Clevis Position Adjustment

•Remove the brake pedal bracket (see Rear Master Cylinder Removal).

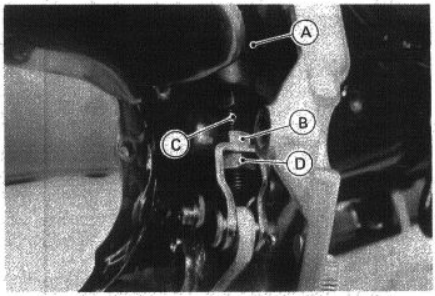

A. Master Cylinder
B. Adjusting Nut
C. Push Rod
D. Locknut

•Loosen the master cylinder locknut.
•Pull out the cotter pin and joint pin.
•Up or down the adjusting nut by turning the clevis to adjust length Ⓐ shown in Rear Master Cylinder Clevis Position Inspection.
•After the adjustment is made, tighten the master cylinder locknut.

NOTE

○*If the length Ⓐ cannot be adjusted by turning the clevis, master cylinder may be damaged.*

Brake Rod

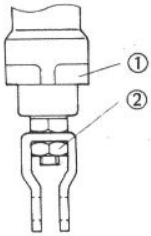

1. Master Cylinder
2. Adjusting Nut

Calipers

Caliper Removal

•Unscrew the caliper mounting bolts, and remove the caliper.

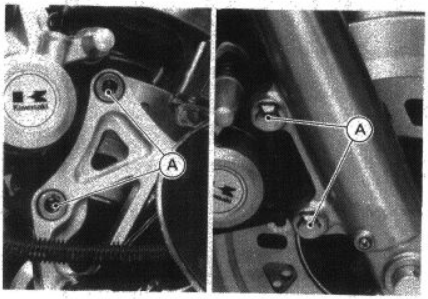

A. Mounting Bolts

★If the caliper is to be disassembled after removal and if compressed air is not available, remove the piston using the following two steps before disconnecting the brake hose from the caliper.
○Remove the pads (see Pad Removal).
○Pump the brake lever to remove the caliper piston.
○Immediately wipe up any brake fluid that spills.
●Remove the brake hose from the caliper.

Brake Pads

Lining Wear

The following specifications are only those which are unique to the ZL900-A1 model only. For all other data refer to the base manual.

Pad Lining Thickness

Standard	**5 mm**
Service Limit	**1 mm**

Master Cylinders

Rear Master Cylinder Removal

●Remove the following parts before rear master cylinder removal.
Reservoir cover
Battery cover mounting bolts
Battery cover
Battery
Brake pedal clamp bolts
Brake pedal
Right footpeg bracket mounting bolt
Right footpeg bracket with right footpeg
Rear master cylinder mounting bolts (loosen)
Rear master cylinder cover mounting bolts
Rear master cylinder cover

Right Side Cover

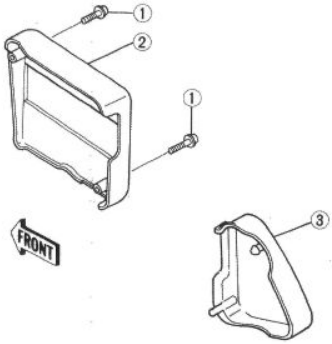

1. Battery Cover Mounting Bolt
2. Battery Cover
3. Reservoir Cover

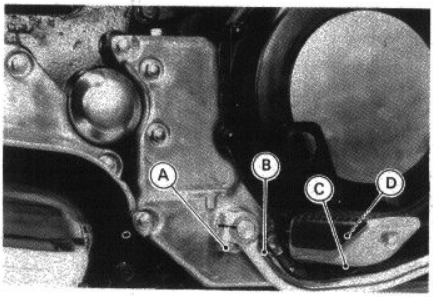

A. Brake Pedal Clamp Bolt
B. Brake Pedal
C. Right Footpeg Bracket Mounting Bolt
D. Right Footpeg Bracket

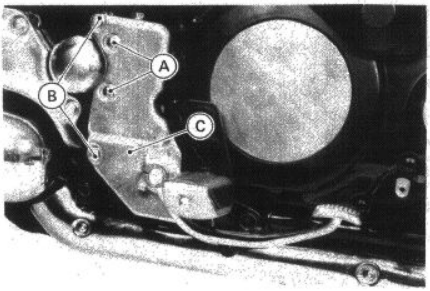

A. Rear Master Cylinder Mounting Bolts
B. Rear Master Cylinder Cover Mounting Bolts
C. Rear Master Cylinder Cover

•Remove the banjo bolt to disconnect the brake hose from the master cylinder, and temporarily secure the end of the brake hose to some high place to keep fluid loss to a minimum. There is a flat washer on each side of the hose fitting.

Rear Master Cylinder

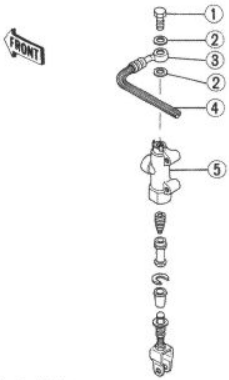

1. Banjo Bolt
2. Flat Washer
3. Brake Hose Fitting
4. Brake Hose
5. Master Cylinder

•Disconnect the brake light switch lead connectors.

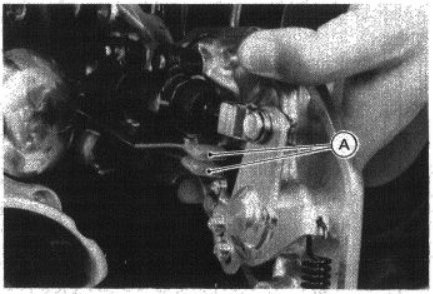

A. Connectors

•Remove the reservoir mounting bolt and slide the hose clamp out of its place.
•Disconnect the brake hose from the reservoir. Immediately wipe up any brake fluid that spills.

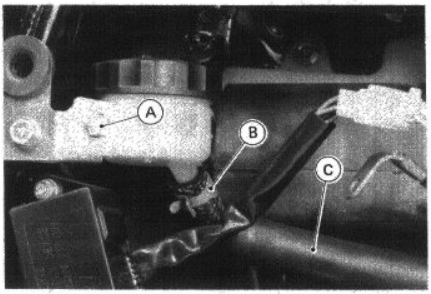

A. Mounting Bolt
B. Hose Clamp
C. Brake Hose

•Remove the brake pedal spring.
•Unscrew the rear master cylinder mounting bolts, and remove the master cylinder with shaft and lever.

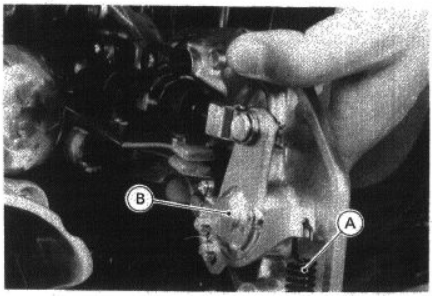

A. Brake Pedal Spring
B. Shaft and Lever

- Remove the cotter pin, and pull the joint pin out of the bracket.

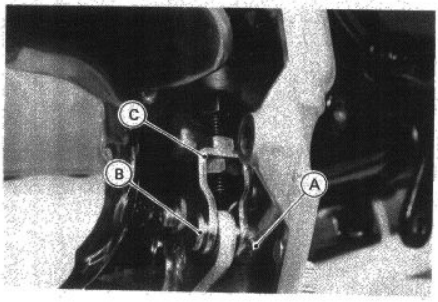

A. Cotter Pin
B. Joint Pin
C. Bracket

Disc

Disc Warp

- Position the motorcycle across a hoist to lift the front or rear off the floor. And measure the front and rear disc runout as written in the Base Manual.

Disc Runout

Standard	**Under 0.2 mm**
Service Limit	**0.3 mm**

Suspension

Table of Contents

Exploded View

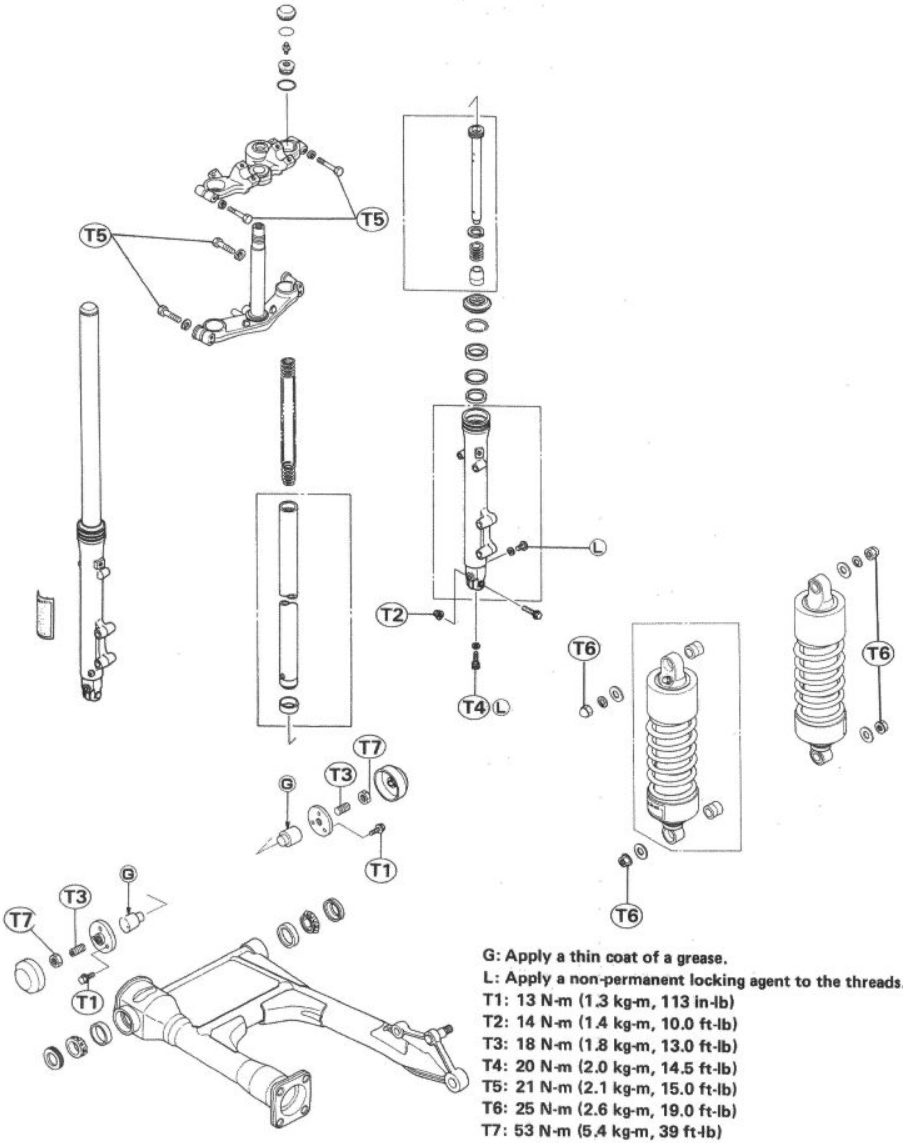

G: Apply a thin coat of a grease.
L: Apply a non-permanent locking agent to the threads.
T1: 13 N-m (1.3 kg-m, 113 in-lb)
T2: 14 N-m (1.4 kg-m, 10.0 ft-lb)
T3: 18 N-m (1.8 kg-m, 13.0 ft-lb)
T4: 20 N-m (2.0 kg-m, 14.5 ft-lb)
T5: 21 N-m (2.1 kg-m, 15.0 ft-lb)
T6: 25 N-m (2.6 kg-m, 19.0 ft-lb)
T7: 53 N-m (5.4 kg-m, 39 ft-lb)

Specifications

Item	Standard	Service Limit
Front Fork:		
Oil type	SAE 10W20	– – –
Oil capacity	276 ±2.5 mL (approx. 235 mL at oil change)	– – –
Oil level	170 ±2 mm (Fully Compressed)	– – –
Air pressure	Atmospheric pressure	– – –
Fork spring free length	531 mm	520 mm
Rear Shock Absorbers:		
Air pressure	Atmospheric pressure	Usable range: 0 ~ 196 kPa (0 ~ 2.0 kg/cm², 0 ~ 28 psi)

Special Tools

Air Pressure Gauge: 52005-1003

Front Fork Cylinder Holder Adapter: 57001-1057

Front Fork Cylinder Holder Handle: 57001-183

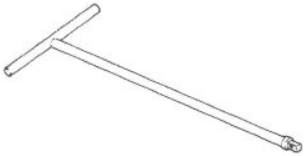

Front Fork Oil Seal Driver: 57001-1104

Oil Seal and Bearing Remover: 57001-1058

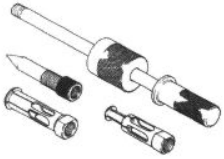

Socket Wrench Holder: 57001-1225

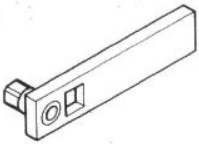

Front Fork

Air Pressure Adjustment

- Use the air pressure gauge (special tool) specially made for air suspensions.
- Check and adjust the air pressure when the front fork is cold (room temperature).

Front Fork Air Pressure

Standard: 0 kPa (0 kg/cm^2, 0 psi)

NOTE

○*Do not use tire gauges for checking the air suspension's air pressure. They do not indicate the correct pressure because of air leaks that occur when the gauge is applied to the valve.*

○*Lower air pressure is for comfortable riding, but it should be increased for high speed riding, or riding on bad roads.*

○*This air pressure is for one rider with no accessories.*

WARNING

○**The standard air pressure is atmospheric pressure. Pressure too high can produce a hazardous riding condition.**

○**Do not incinerate the front fork.**

○**Do not remove the springs and rely on compressed air only. Correct springs must be used in this suspension system. Use without springs can lead to a condition causing accident and injury.**

CAUTION

○**Inject air little by little so that air pressure does not raise rapidly. Air pressure exceeding 245 kPa (2.50 kg/cm^2, 36 psi) may damage the oil seal.**

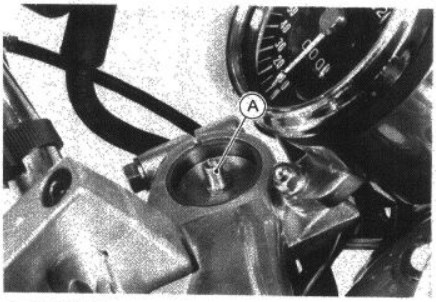

A. Air Valve

Fork Oil Change

- Position the motorcycle across a hoist to lift the front wheel off the floor.

CAUTION

○**Do not place any type of stand under the exhaust power chamber. This could damage the chamber.**

- Remove the front fork (see Front Fork Removal).
- Release the air in the fork leg through the air valve at the top of the fork leg.
- Press the top plug down, and remove the top plug retaining ring, and then remove the top plug.
- Pull out the fork spring.
- Remove the drain bolt.
- Allow the oil to drain into a suitable container. If you pump the fork legs to force out the oil, be sure to catch the oil in a container as it squirts out.
- Wash the drain bolt clean of oil, blow it dry and install it.
- Pour in the specified type and amount of oil.
- With the fork fully compressed insert a tape measure or rod in the inner tube, and measure the distance from the top of the inner tube to the oil.

★If the oil is above or below the specified level, remove or add oil and recheck the oil level.

CAUTION

○**The operation of air front forks is especially dependent upon correct oil level. Higher level than specified may cause oil leakage and seal breakage. So be sure to maintain the specified level.**

Fork Oil Level Measurement

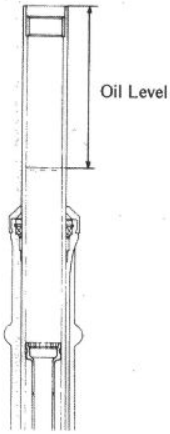

- Inspect the O-ring on the top plug, and replace it with a new one if it is damaged.
- Install the spring.
- Push down the top plug, and install retaining ring.
- Change the oil in the other fork leg in the same manner.
- Adjust the air pressure.

Front Fork Oil

Viscosity	**SAE 10W20**
Amount per side	
When changing oil:	**235 mL**
After disassembly and completely dry:	**276 ±2.5 mL**
Level (with no main spring, fully compressed)	**170 ±2 mm**

Front Fork Removal

- Position the motorcycle across a hoist to lift the front wheel off the floor.

CAUTION

○**Do not place any type of stand under the exhaust power chamber. This could damage the chamber.**

- Remove the following parts. Refer to the appropriate chapters.
  - Brake hose clamp mounting bolt
  - Brake Hose clamp
  - Caliper
  - Front wheel
  - Front fender
  - Upper clamp bolt (loosen)
  - Lower clamp bolt (loosen)

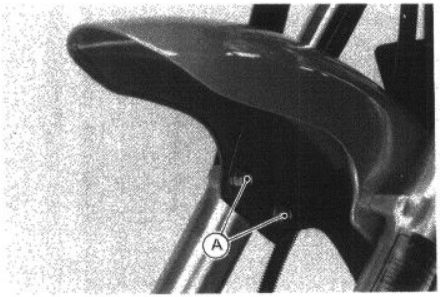

A. Fender Mounting Bolts

- With a twisting motion, work the fork leg down and out.

Front Fork Installation

- When installing the fork leg, be careful of the following items.
  - ○If the fork leg was disassembled, check the fork oil level.
  - ○Route the brake and clutch hoses correctly.
  - ○Tighten the lower and upper clamp bolts to specified torque.
  - ○Tighten clamp bolt.
  - ○Tighten the caliper mounting bolts to the specified torque.
  - ○Check the front brake after installation.

Front Fork Disassembly

- Remove the front fork leg (see Front Fork Removal).
- Release air pressure from the fork.
- Remove the top plug, and spring (see Fork Oil Change).
- Pour out the fork oil.
- Stop the cylinder from turning by using the front fork cylinder holder handle and adapter (special tools).
- Unscrew the Allen bolt and take off the bolt, and gasket from the bottom of the outer tube.

Front Fork Cylinder Removal

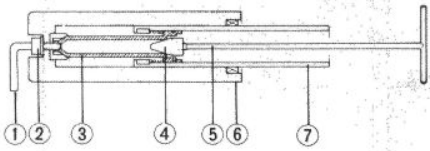

1. Wrench
2. Bolt
3. Cylinder
4. Adapter: 57001-1057
5. Handle: 57001-183
6. Outer tube
7. Inner tube

- Remove the piston and cylinder unit and short spring up side down on the front fork.
- Separate the inner tube from the outer as follows.
  - ○Remove the dust seal from the outer tube.
  - ○Remove the retainer from the outer tube.
  - ○Holding the inner tube by hand and keeping the fork leg in a vertical position, tap the outer tube on the upper end with the driver (special tool) until the outer tube falls off the inner tube. Face the big end of the driver downward.

CAUTION

○**To avoid damaging the inner tube guide bush, do not tap the outer tube with the fork leg laid horizontally on a work bench.**

Front Fork Outer Tube Removal

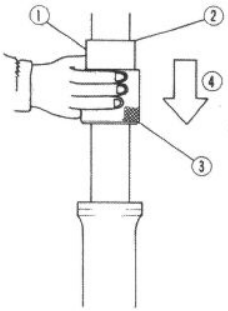

1. Driver: 57001-1104
2. Small End
3. Big End
4. Tap

○Remove the oil seal, washer and outer tube guide bush using oil seal and bearing remover (special tool).

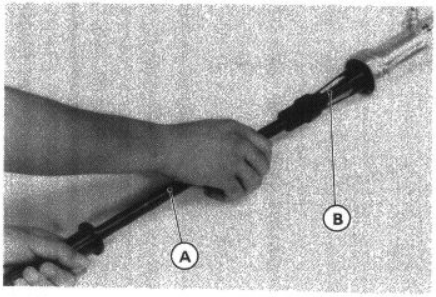

A. Oil Seal and Bearing Remover: 57001-1058
B. Adapter

●Remove the cylinder base from the bottom of the outer tube.

Front Fork Assembly

Assemble the front fork as follows. Refer to the appropriate sections.

●Visually inspect the O-ring on the top plug, and replace it if necessary.
●Inspect the guide bushes for damage (see Guide Bush Inspection).
●Insert the cylinder unit in the inner tube.
●Install the cylinder base.
●Insert the inner tube and cylinder as a set in the outer tube.
●Apply a non-permanent locking agent to the Allen bolt.
●Tighten the Allen bolt to the specified torque.
●Install the guide bush as shown in the Guide Bush Installation illustration until it stops.
○The slit in the bush must face toward the left or right.
●Install the new oil seal with a driver (special tool).
★If the drain screw is removed note the following.
○Visually inspect it, and replace it if necessary.
○Apply a non-permanent locking agent to the screw.
○Tighten the drain screw to the specified torque.
●Insert the fork spring with the small diameter end facing down.

Front Fork Spring

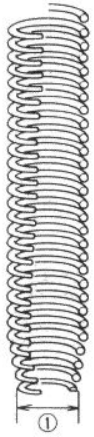

1. Small Diameter End

●Pour in the type and amount of fork oil specified.
●Adjust the oil level (see Fork Oil Change).
●Install the top plug and retaining ring.

Guide Bush Installation

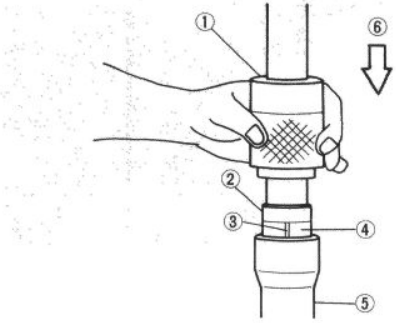

1. Driver: 57001-1104
2. Used Guide Bush
3. Slit
4. New Guide Bush
5. Outer Tube
6. Tap

Spring Tension

The following specifications are only those which are unique to the ZL900 model only. For all other data refer to the base manual.

Fork Spring Free Length

Standard:	**531 mm**
Service Limit:	**520 mm**

Rear Shock Absorber

The rear shock absorbers can be adjusted by changing the air pressure and damping force to suit various riding and loading conditions.

Air Pressure Adjustment

●Check and adjust the air pressure when the rear shock absorber is cold (room temperature).

Rear Shock Absorber Air Pressure

Standard: Atmospheric pressure (for one rider with no accessories)

Usable Range: 0 ~ 196 kPa (0 ~ 2.0 kg/cm², 0 ~ 28 psi)

●Adjust the air pressure to **atmospheric pressure** as follows.

○Remove the air valve cap and push in the valve core.

○Reinstall the air valve cap.

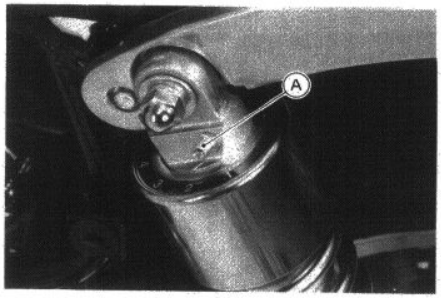

A. Valve

●Under special conditions, however, adjust the air pressure to suit your preference within the usable range as follows.

○To raise the pressure, inject air through the valve with a tire pump.

○Check the air pressure with the air pressure gauge (special tool: 52005-1003).

NOTE

○Do not use a tire gauge for checking air pressure. They may not indicate the correct air pressure because of air leaks that occur when the gauge is applied to the valve.

○Lower air pressure is for comfortable riding for an average-build rider of 667 N (68 kg, 150 lb) with no accessories. Ordinarily, the heavier the total load becomes, the higher the air pressure should be set.

CAUTION

○Inject air little by little so that air pressure does not rise rapidly. Air pressure exceeding 490 kPa (5.0 kg/cm², 71 psi) may damage the oil seal.

○Try to set the air pressure of the right and left fork legs as equally as possible.

WARNING

○Be sure to adjust the air pressure within the usable range. Pressure too high can produce a hazardous riding condition.

○Only air or nitrogen gas can be used. Never inject oxygen or any kind of explosive gas.

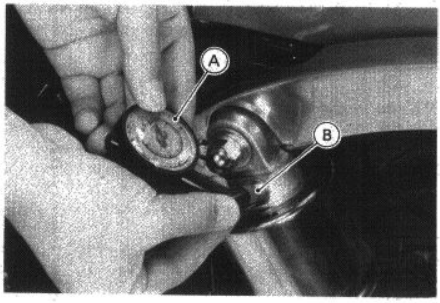

A. Pressure Gauge: 52005-1003 B. Air Valve

Rear Shock Absorber Air Pressure

Air Pressure kPa (kg/cm², psi)	Setting	Load	Road
0 (0.0, 0)	Soft	Light	Good
↑	↑	↑	↑
↓	↓	↓	↓
196 (2.0, 28)	Hard	Heavy	Bad

●After adjusting the pressure, install the air valve cap.

Damping Force Adjustment

- Turn the adjuster to the desired number until you feel a click. The numbers on the adjuster show the setting position of the damper.
- Be sure to turn both adjusters to the same setting position.

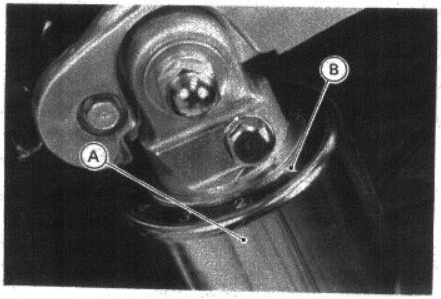

A. Damper Adjuster B. Position Number

WARNING

○**If both adjusters are not adjusted equally, handling may be impaired and a hazardous condition may result.**

NOTE

○*The damping force can be left soft for average riding. But it should be adjusted harder for high speed riding, or riding with a passenger. If the damping feels too soft or too stiff, adjust it in accordance with the following table:*

○*The recommended setting position is the No. 1 position for one rider with no accessories.*

Damper Force

Setting Position	Damping Force	Setting	Load	Road	Speed
1	↓	Soft	Light	Good	Low
2		↑↓	↑↓	↑↓	↑↓
3					
4	Stronger	Hard	Heavy	Bad	High

Rear Shock Absorber Removal

- Position the motorcycle across a hoist to lift the rear wheel off the floor.

CAUTION

○**Do not place any type of stand under the exhaust power chamber. This could damage the chamber.**

- Remove the nuts, lockwashers, and flat washers from both ends of the shock absorber.
- Pull off the rear shock absorber.

Rear Shock Absorber Installation Note

- Install the shock absorber with the air valve cap facing outward.

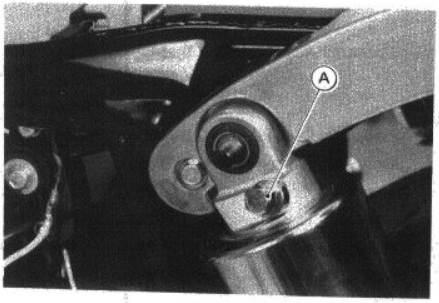

A. Air Valve Cap

- Tighten the upper and lower mounting nuts to the specified torque (see Exploded View).

Rear Shock Absorber Inspection

Since the rear shock absorbers are sealed units which cannot be disassembled, only external checks are necessary.

WARNING

○**If one unit is damaged, replace both shock absorbers as a set. If only one unit is replaced and the two are not balanced, motorcycle instability at high speeds may result.**

- Check the rubber bushings.

★Replace any that are worn, cracked, hardened, or otherwise damaged.

Rear Shock Absorber

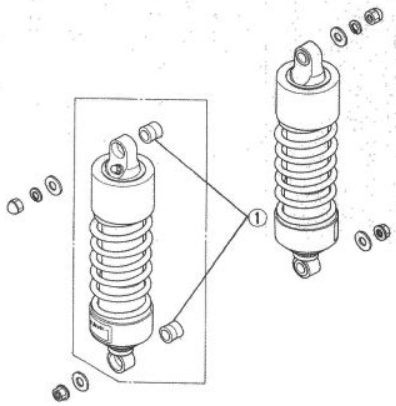

1. Rubber Bushings

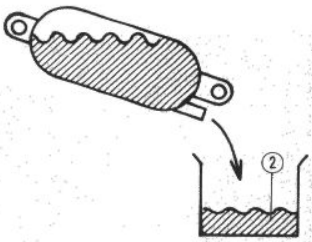

2. Removed Oil

●Stop to remove the oil when the removed oil volume becomes equal to the specified air chamber volume.

Rear Shock Absorber Oil Filling

●Unscrew the air valve.
●Remove the shock absorber.
●Fill the shock unit completely with the specified oil through the air valve opening.

Shock Absorber Oil (per one unit)

Oil viscosity:	**SAE 5W**
Oil capacity:	**149.5 ~ 154.5 mL**
Air chamber capacity:	**105 mL**

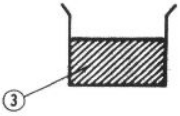

3. Removed Oil (equal to air chamber)

○The shock unit should now have the specified amount of oil.

1. Air Valve Opening: Fill the shock unit with the specified oil.

●Drain the oil until the volume of the oil removed equals the specified air chamber capacity.

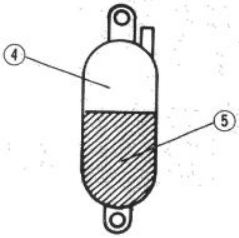

4. Specified air chamber capacity
5. Specified oil capacity

Rear Shock Scrapping

- Before a rear shock absorber is scrapped, release any air pressure and oil completely by removing the air valve.

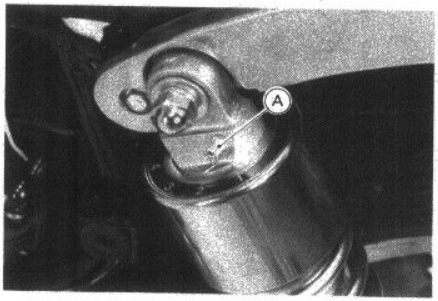

A. Air Valve

WARNING

○**Do not incinerate a shock absorber without first removing the air valve or it may explode.**

Swing Arm

Swing Arm Removal

- Remove the muffler assembly (see Engine Top End chapter).
- Remove the right shock absorber.
- Remove the final gear case (see Final Gear Case Removal in Final Drive chapter).
- Pry off the right and left swing arm caps.

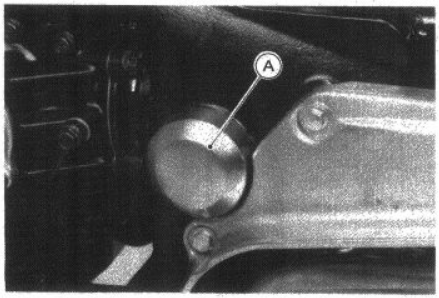

A. Cap

- Unscrew the mounting bolts to remove the shaft retainers on both sides.

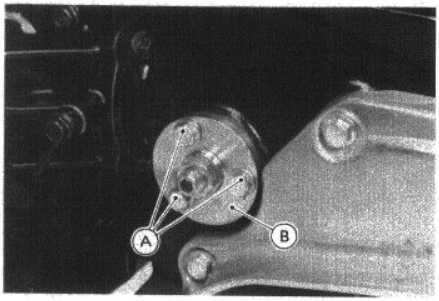

A. Bolts B. Retainer

- While holding the swing arm, pull out the swing arm shafts using a suitable bolt or screw (φ5 x P0.8).

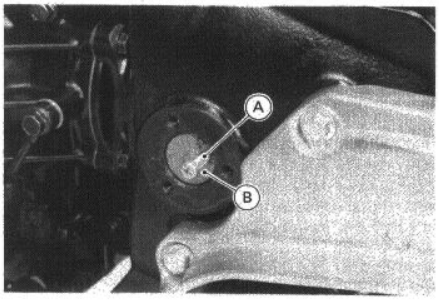

A. A Suitable Bolt or Screw
B. Swing Arm Shaft

- Pull the swing arm out the back of the frame.

Swing Arm Installation and Alignment

- For the '85 model, select the proper pivot shaft in accordance with the combination of the swing arm bracket and pivot shaft coding.

Swing Arm Pivot Shaft Selection

Swing Arm Bracket Mark	Pivot Shaft Mark
A	A
B	B
C	C
W	W
X	X
Y	Y
Z	Z

Swing Arm Bracket and Pivot Shaft Size Mark Location

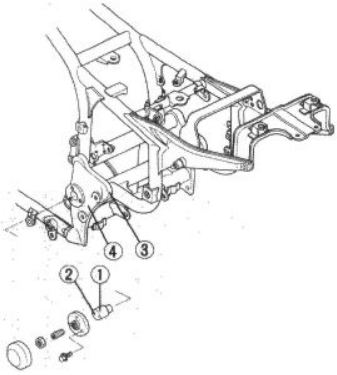

1. Swing Arm Pivot Shaft
2. Swing Arm Pivot Shaft Mark
3. Swing Arm Bracket
4. Swing Arm Bracket Mark

●Lubricate the swing arm shaft bearings before swing arm installation (see Swing Arm Lubrication).
●Grease the swing arm shaft with a molybdenum disulfide grease.

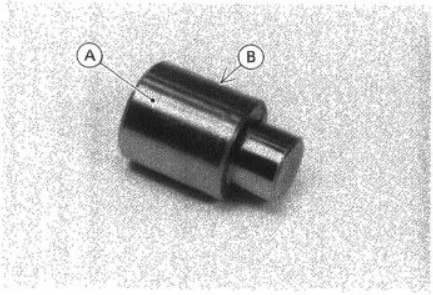

A. Swing Arm Shaft B. Apply grease.

●Install the swing arm shafts, locknuts and swing arm.
●Install the shaft retainers and tighten the mounting bolts.
●Adjust the swing arm side clearance as follows.
○Insert a suitable spacer; 2.5 mm thick; between the frame gusset and the swing arm left side.

Swing Arm Pivot

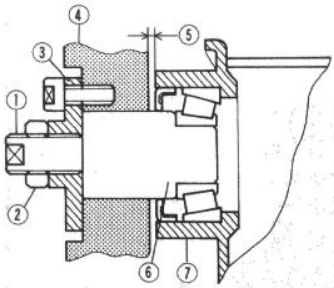

1. Adjuster Bolt
2. Locknut
3. Shaft Retainer
4. Frame Gusset
5. Left Side Clearance
6. Swing Arm Shaft
7. Swing Arm

○Screw in the right-hand adjuster bolt to push in the right-hand swing arm shaft until the adjuster bolt stops.
○Using a thickness gauge, check the right side clearance.
○Take out the spacer from the swing arm left side.
☆If right side clearance is less than 2.5 mm, screw in the right adjuster bolt more, so that right side clearance becomes equal to left side clearance.
●Using the socket wrench holder (special tool), tighten the locknut to the specified torque (see Exploded View).

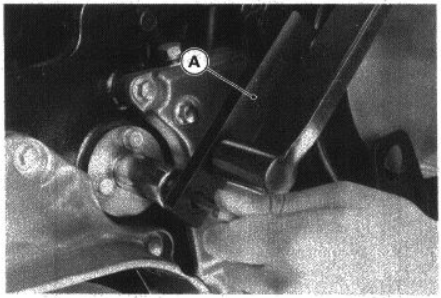

A. Socket Wrench Holder: 57001-1225

●Tighten the left-hand adjuster bolt to the specified torque (see Exploded View).
●Using the socket wrench holder (special tool), tighten the locknut to the specified torque (see Exploded View).
●Move the swing arm up and down to check for abnormal friction, and push and pull it from side to side to check for bearing play.

Swing Arm Disassembly Notes

- Pull out the outer races of the tapered roller bearings using the oil seal and bearing remover and adapter (special tool).

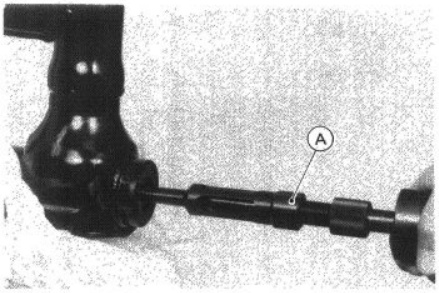

A. Remover: 57001-1058

Swing Arm Assembly Note

- Use a suitable bearing driver in the bearing driver set (special tool: 57001-1129) to press in the tapered roller bearing outer races and grease seals.

Swing Arm Bearing Inspection

- Remove the rear wheel, both rear shock absorbers, and the final gear case.
- Move the swing arm up and down to check for abnormal friction, and push and pull it from side to side to check for bearing play.

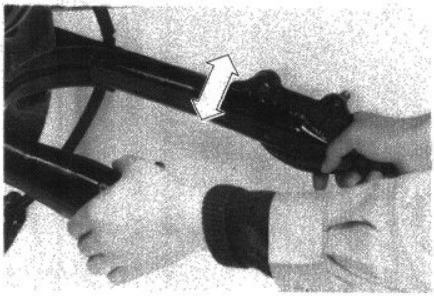

- If abnormal friction is felt, the bearings are damaged. Replace both left and right bearings and grease seals.
- The play developed during use may indicate bearing damage. In this case, remove the swing arm and inspect the bearings. Replace both left and right bearings if one of the bearings is damaged.

Swing Arm Lubrication

Grease the swing arm shaft bearings with a molybdenum disulfide chassis assembly grease in accordance with the Periodic Maintenance Chart.

- Remove the swing arm, and remove the grease seals from both sides of the swing arm (see Swing Arm Disassembly Notes).
- Clean the old grease out of the bearings, and apply fresh grease to them.

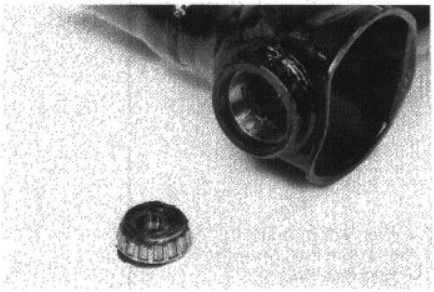

- Install new grease seals, smearing them with a thin coat of molybdenum disulfide grease.
- Install the swing arm (see Swing Arm Installation).

Steering

Table of Contents

Exploded View

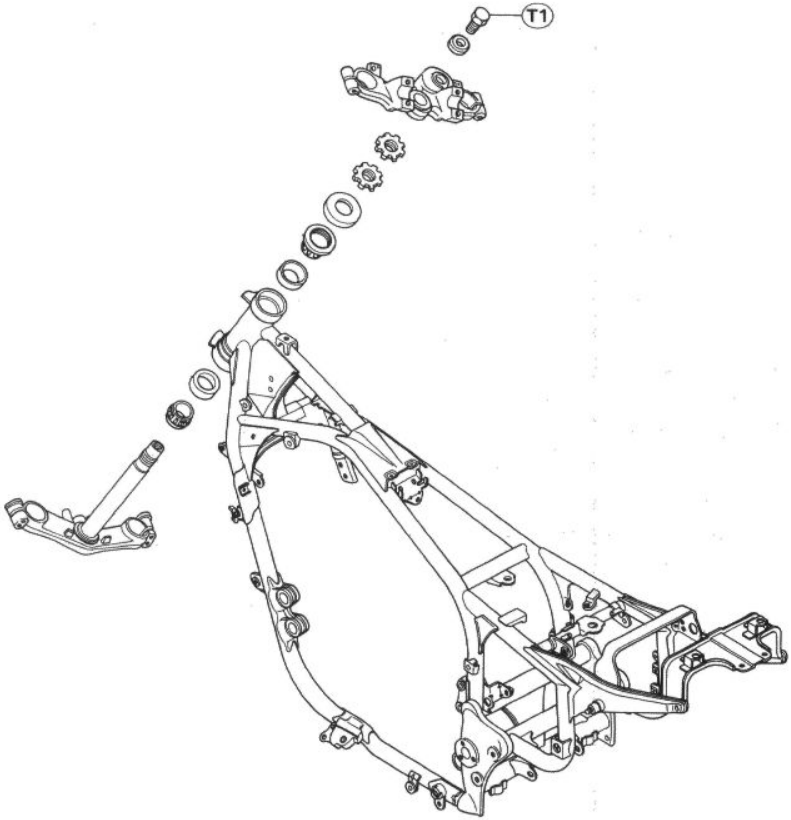

T1: 39 N-m (4.0 kg-m, 29 ft-lb)

Steering Adjustment

Steering Inspection

- Steering inspection procedure for the ZL900 is the same as for the ZX900, except following.
- ○Position the motorcycle across a hoist to lift the front wheel off the floor.

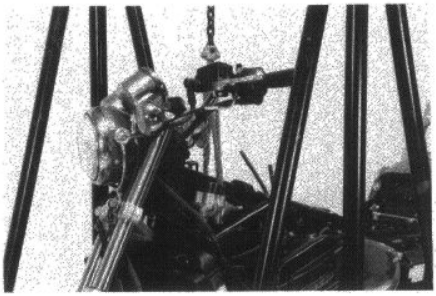

CAUTION

○Do not place any type of stand under the exhaust power chamber. This could damage the chamber.

Steering Adjustment

- Loosen the following parts.
  - Front fork lower clamp bolts
  - Stem head bolt
- Position the motorcycle across a hoist to lift the front wheel off the floor.

CAUTION

○Do not place any type of stand under the exhaust power chamber. This could damage the chamber.

- Loosen the stem locknuts all the way with the stem nut wrench (special tool).

NOTE

○Do not separate the upper and lower stem locknut.
○Loosen the steering by turning the lower stem locknut counterclockwise.
○Tighten the steering by turning the upper stem locknut clockwise.

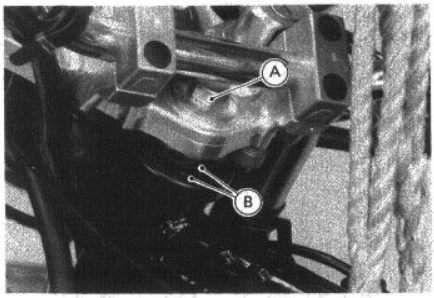

A. Stem Head Bolt B. Stem Locknuts

- If the steering is too tight, loosen the stem locknuts a fraction of turn; if the steering is too loose, tighten the locknuts a fraction of a turn. Turn the locknut 1/8 turn (maximum) at a time.
- Tighten the following parts to the specified torque (see Exploded View).
  - Steering stem head nut
  - Front fork lower clamp bolts
- Check the steering again.
- ★If the steering is still too tight or too loose, repeat the adjustment.
- Install the parts removed.
- Check that the cables and wires are routed properly.

Steering Removal/Installation

Steering Stem Removal

- Steering stem removal procedure for the ZL900 is the same as for the ZX900, except following.
- ○Remove the following parts before stem base removal.
  - Fuel Tank
  - Front Wheel
  - Front Turn Signal Lights and Meters
  - Headlight
  - Ignition Switch
  - Front Forks
  - Brake Hose Joint
  - Master Cylinders
  - Handlebar
  - Stem Head Cover
  - Stem Head Bolt
  - Stem Head Flat Washer
  - Steering Stem Head
- ○Since grease seal; which is pressed onto the steering stem; is not on the ZL900. Omit removal of this grease seal.

Steering Stem Installation

●Steering stem installation porcedure for the ZL900 is the same as for the ZX900, except following.

○Install the locknut so that the stepped side faces down, and then install the plain locknut by hand.

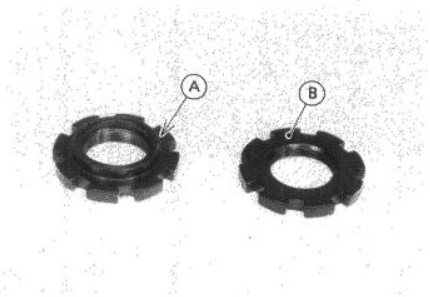

A. Stepped B. Plane Locknut

○Since lockwasher is not on the ZL900, omit the installation of this lockwasher.

Controls

Table of Contents

Exploded View

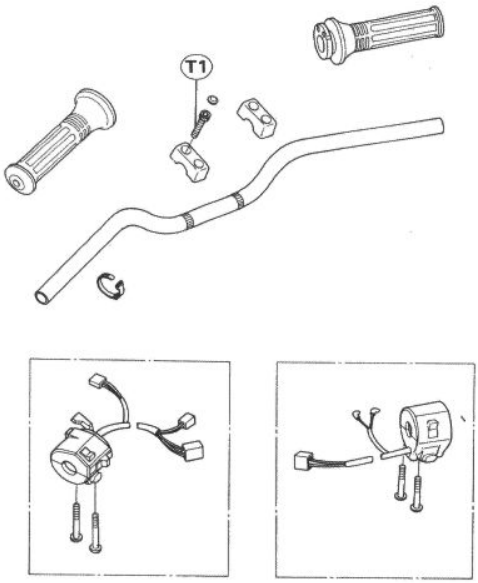

T1: 23 N-m (2.3 kg-m, 16.5 ft-lb)

Handlebar

Handlebar Removal

- Remove the following parts. Refer to the appropriate chapters.
  - Left switch housing
  - Right switch housing
  - Throttle grip
  - Master cylinders
  - Handlebar clamp bolt caps
  - Handlebar clamp bolts
  - Handlebar

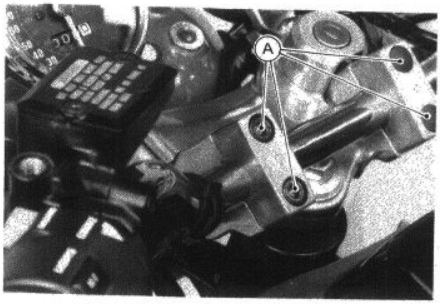

A. Handlebar Clamp Bolts

Handleber Installation Notes

- Tighten the front and then rear handlebar clamp bolts to the specified torque (see Exploded View).

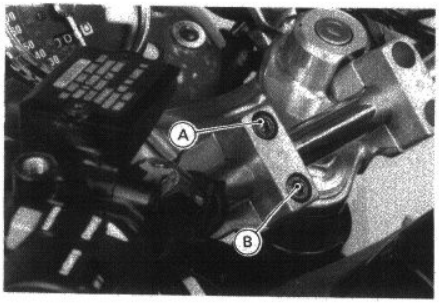

A. Front Handlebar Clamp Bolts
B. Rear Handlebar Clamp Bolts

- Making sure that the projection in the switch housing fits into the hole in the handlebar, assemble the switch housing. And after installing the switch housing, check the throttle grip play and adjust it if necessary.

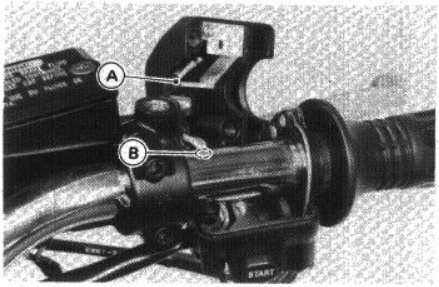

A. Projection B. Hole

- Do not forget to install the choke cable holding plate.

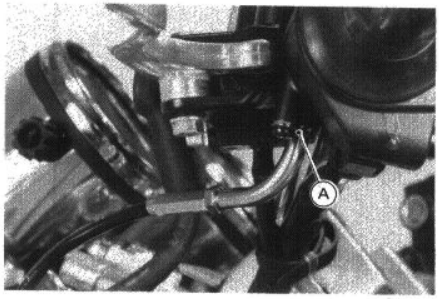

A. Choke Cable Holding Plate

- The front brake and clutch master cylinder clamp must be installed with the arrow mark upward. Tighten the upper clamp bolt first, and then the lower clamp bolt both to the specified torque. There will be a gap at the lower part of the clamp after tightening.

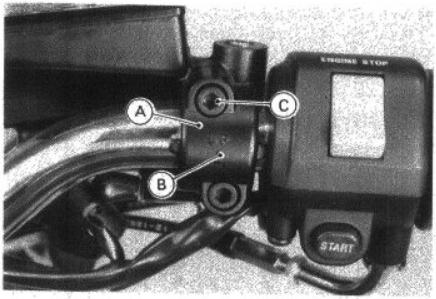

A. Clamp
B. Arrow Mark
C. Tighten upper clamp bolt first

- Check and adjust the following items:
  Throttle grip
  Clutch
  Front brake

Frame

Table of Contents

Exploded View

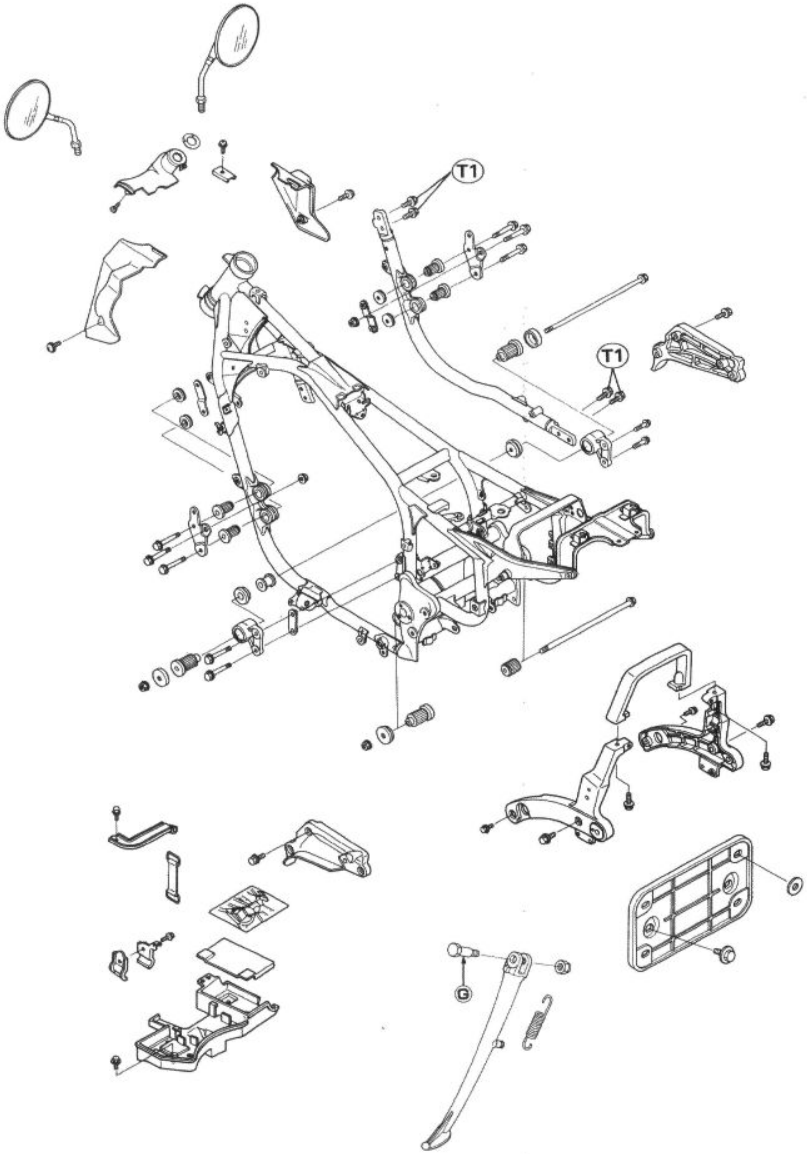

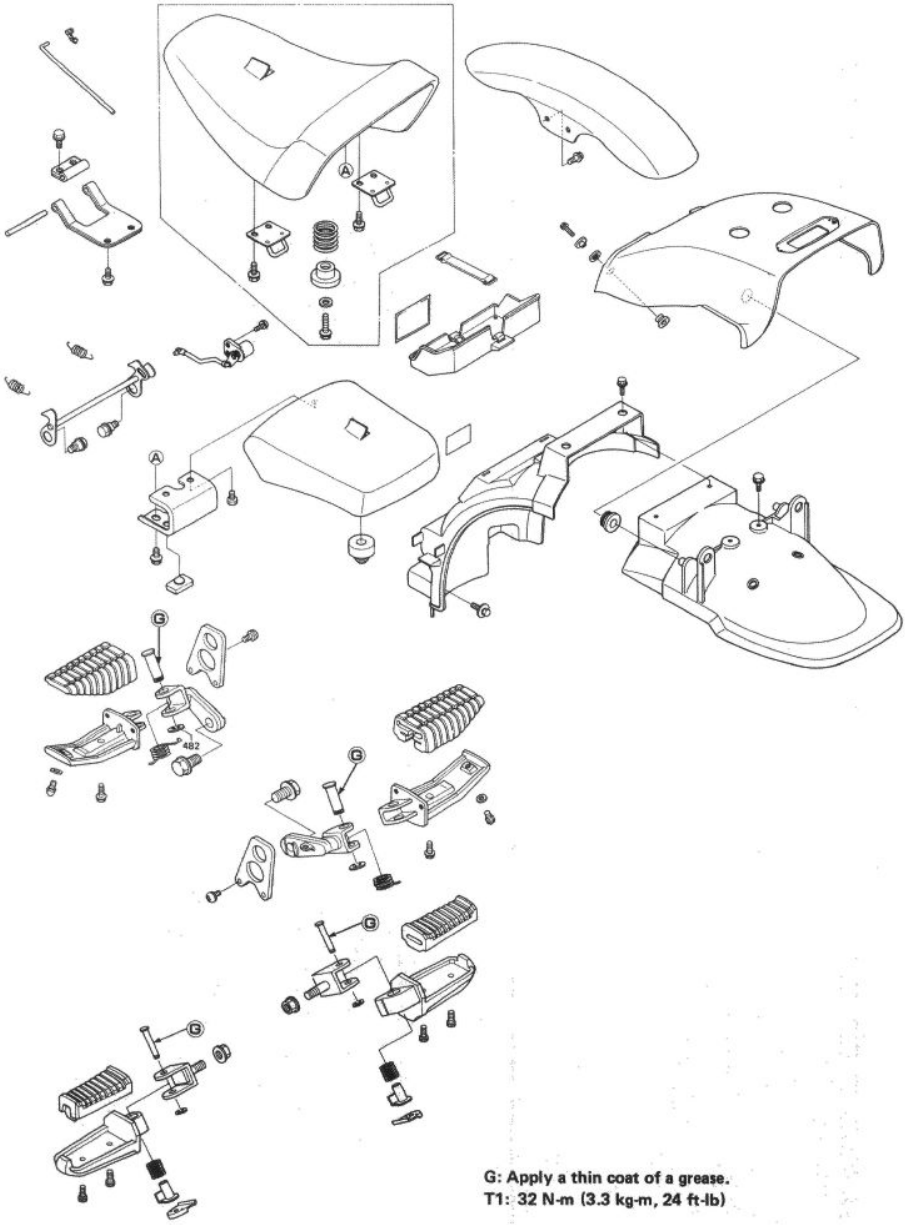

G: Apply a thin coat of a grease.
T1: 32 N-m (3.3 kg-m, 24 ft-lb)

Seat Cover

Seat Cover Removal

- Remove the following parts before seat cover removal.
  License Plate Light Lead Connector (disconnect)
  Seat Cover Mounting Bolts
  License Plate Holder
  Rear Shock Absorber (Right Side)
  Lower Part of Frame (Right Side)
- Holding the lower part of the back frame, pull out the seat cover toward the front.
- Install the lower part of the back frame temporarily.

1. License Plate Light Lead Connector
2. Seat Cover Mounting Bolts
3. License Plate Holder
4. Lower Part of Back Frame

Seat Cover Installation Notes

- Installation is the reverse of removal. Note the following.
- When installing the seat cover, insert the projection on the rear fender rear section into the hole in the seat cover.

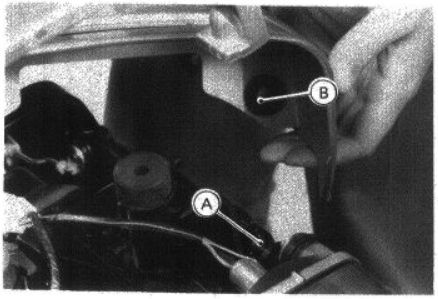

A. Projection B. Hole

- Install the license plate holder as shown.

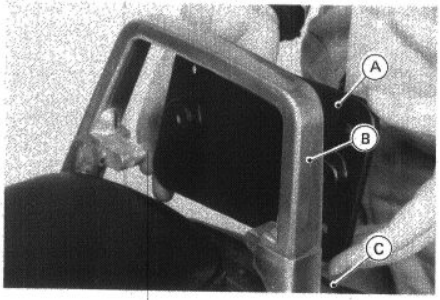

A. License Plate Holder
B. Back Frame
C. Seat Cover

Fender

Rear Fender Rear Section Removal

- Remove the seat cover (see Seat Cover Removal).
- Disconnect the tail/brake light lead connector.
- Unclamp the turn signal light lead clamps, and unscrew the rear fender rear section mounting bolts.
- Remove the rear fender rear section.

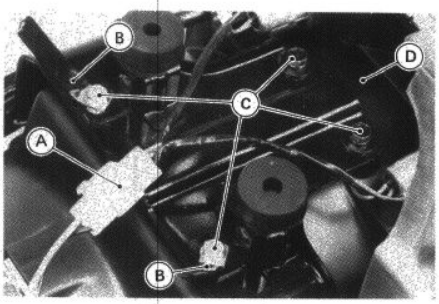

A. Tail/Brake Lights Lead Connector
B. Clamps
C. Mounting Bolts
D. Rear Fender Rear Section

Rear Fender Rear Section Installation Notes

- Installation is the reverse of removal. Note the following.
- Clamp the turn signal light leads properly.
- Connect the tail/brake light lead connector.

Rear Fender Front Section Removal

- Remove the following parts before rear fender front section removal.
  - Rear fender rear section
  - Starter relay (pull out)
  - Rear footpeg bracket (left side) mounting bolts
  - Rear footpeg bracket (left side)
  - Rear fender front section mounting bolts
  - Rear fender front section

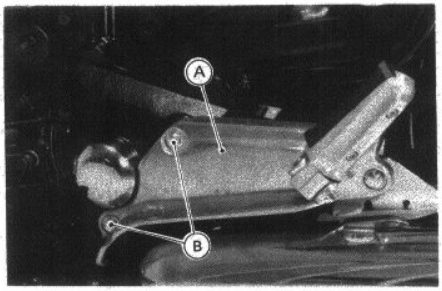

A. Rear Footpeg Bracket B. Mounting Bolts

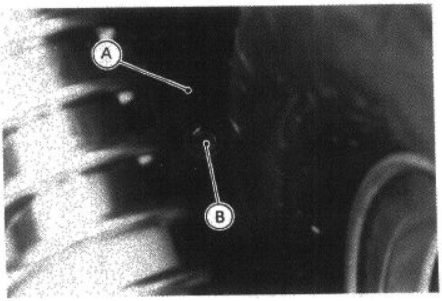

A. Rear Fender Front Section
B. Mounting Bolts

Rear Fender Front Section Installation Notes

- Installation is the reverse of removal. Note the following.
- Insert the tongues on the rear fender front section into the grooves of the starter relay cover.

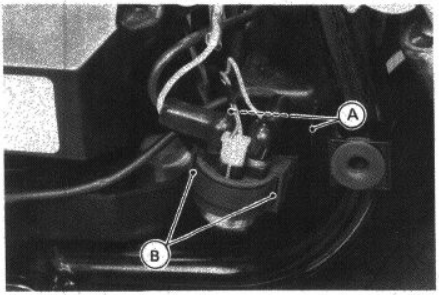

A. Tongues B. Grooves

Electrical System

Table of Contents

B.M. : Base Manual

Precautions

There are numbers of important precautions that are musts when servicing electrical systems. Learn and observe all the rules below.

- Do not reverse the battery lead connections. This will burn out the diodes in the electrical parts.
- Always check battery condition before condemning other parts of an electrical system. A fully charged battery is a must for conducting accurate electrical system tests.
- The electrical parts should never be struck sharply, as with a hammer, or allowed to fall on a hard surface. Such a shock to the parts can damage them.
- To prevent damage to electrical parts, do not disconnect the battery leads or any other electrical connections when the ignition switch is on, or while the engine is running.
- Because of the large amount of current, never keep the starter switch pushed when the starter motor will not turn over, or the current may burn out the starter motor windings.
- Do not use a meter illumination bulb rated for other than voltage or wattage specified in the wiring diagram, as the meter or gauge panel could be warped by excessive heat radiated from the bulb.
- Take care not to short the leads that are directly connected to the battery positive (+) terminal to the chassis ground.
- Troubles may involve one or in some cases all items. Never replace a defective part without determining what CAUSED the failure. If the failure was brough on by some other item or items, they too must be repaired or replaced, or the new replacement will soon fail again.
- Make sure all connectors in the circuit are clean and tight, and examine wires for signs of burning, fraying, etc. Poor wires and bad connections will affect electrical system operation.

- Electrical Connectors

Female Connectors

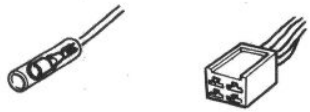

Male Connectors

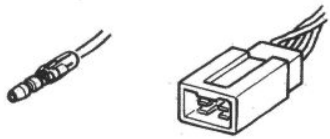

- Color Codes:

BK	Black
BL	Blue
BR	Brown
CH	Chocolate
DG	Dark green
G	Green
GY	Gray
LB	Light blue
LG	Light green
O	Orange
P	Pink
PU	Purple
R	Red
W	White
Y	Yellow

- Measure coil and winding resistance when the part is cold (at room temperature).

ZL900-A1/A2 Wiring Diagram

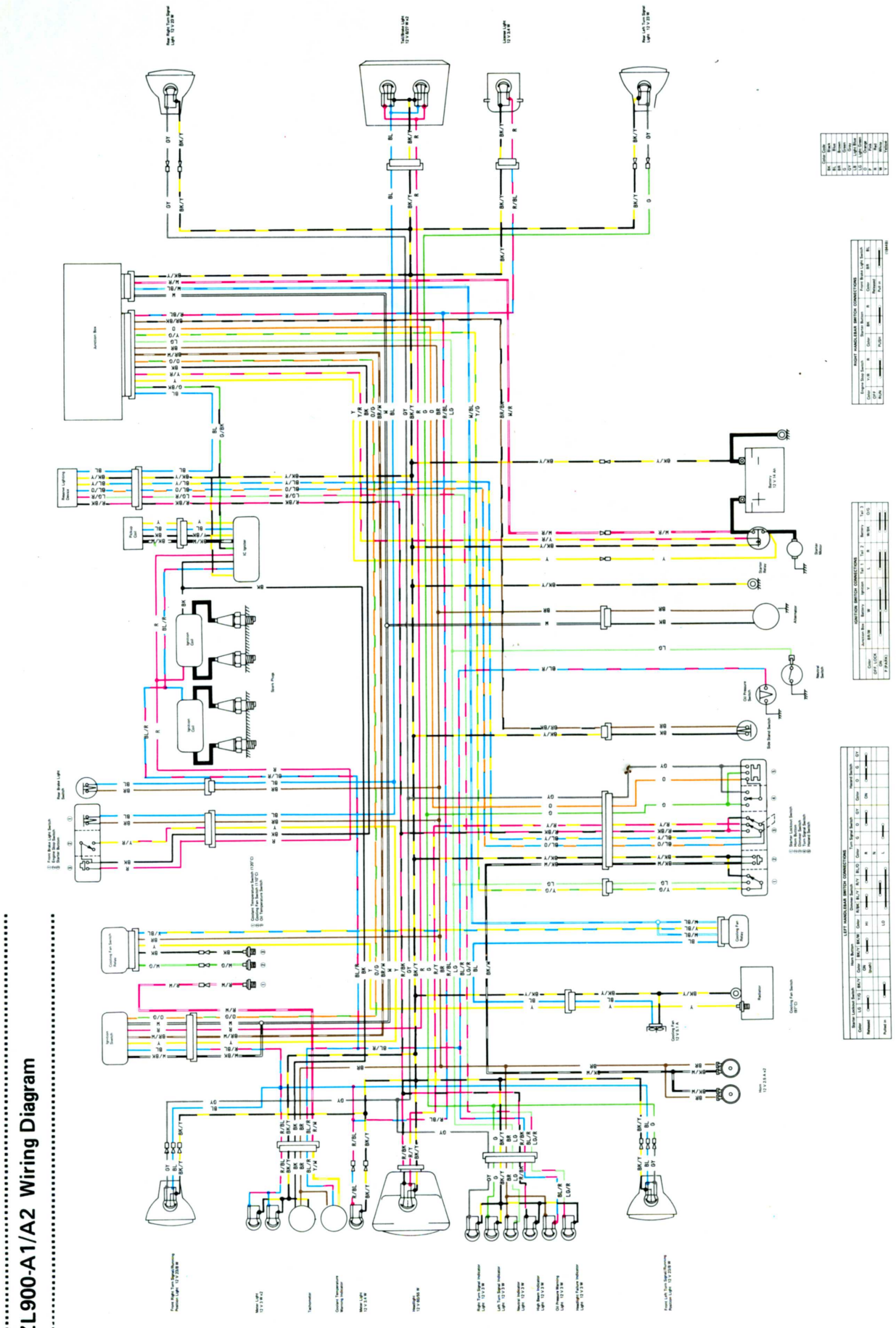

Exploded View

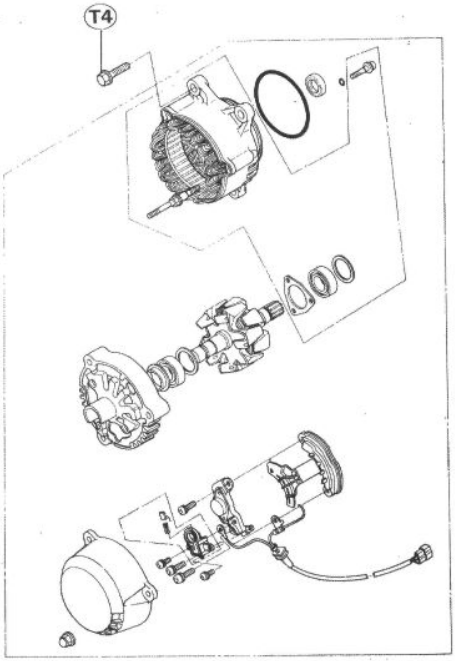

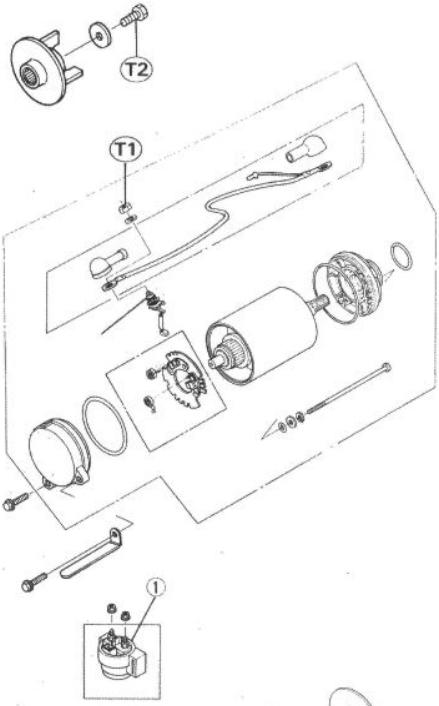

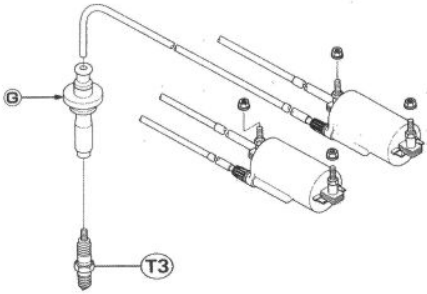

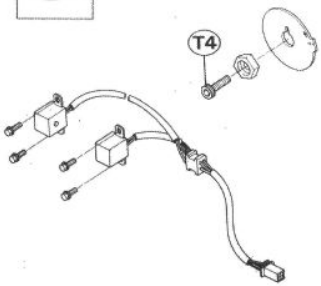

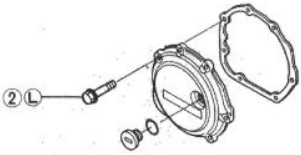

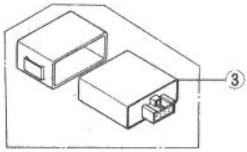

1. Starter Relay
2. Pickup Coil Cover Bolts
   Two of them require locking agent (see Pickup Coil Removal/Installation Notes)
3. IC Igniter

G: Apply grease.
L: Apply a non-permanent locking agent to the threads.
T1: 4.9 N-m (0.50 kg-m, 43 in-lb)
T2: 9.8 N-m (1.0 kg-m, 87 in-lb)
T3: 14 N-m (1.4 kg-m, 10.0 ft-lb)
T4: 25 N-m (2.5 kg-m, 18.0 ft-lb)

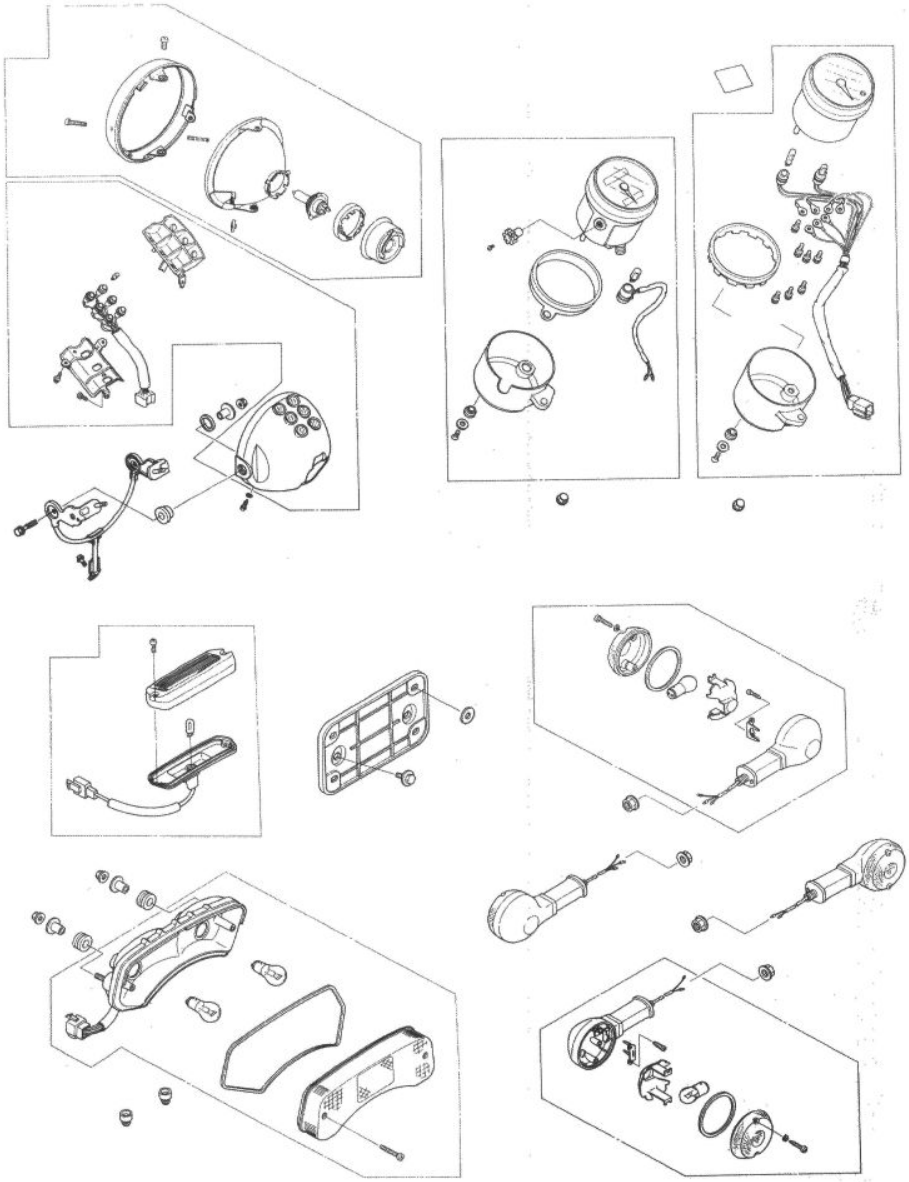

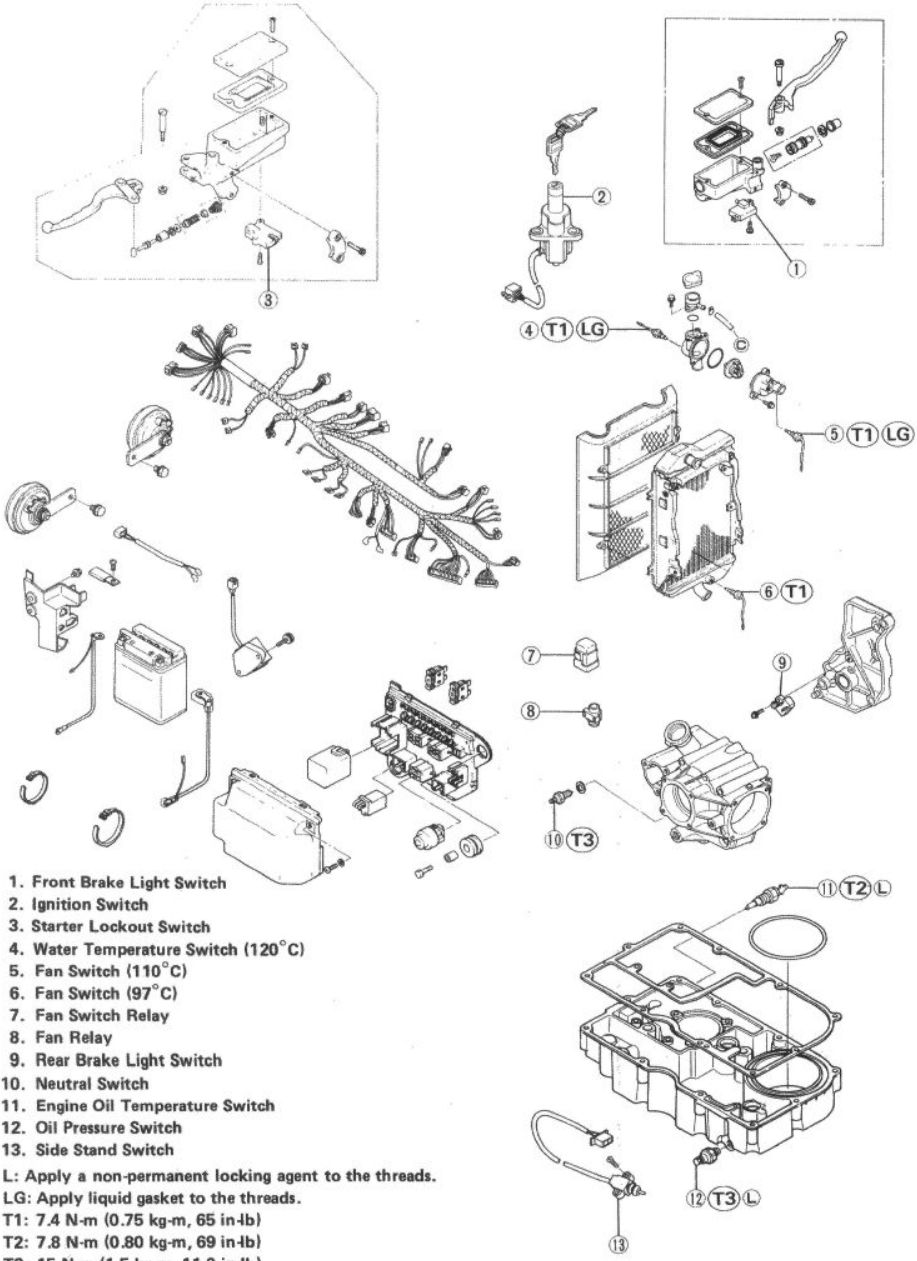

1. Front Brake Light Switch
2. Ignition Switch
3. Starter Lockout Switch
4. Water Temperature Switch (120°C)
5. Fan Switch (110°C)
6. Fan Switch (97°C)
7. Fan Switch Relay
8. Fan Relay
9. Rear Brake Light Switch
10. Neutral Switch
11. Engine Oil Temperature Switch
12. Oil Pressure Switch
13. Side Stand Switch

L: Apply a non-permanent locking agent to the threads.
LG: Apply liquid gasket to the threads.
T1: 7.4 N-m (0.75 kg-m, 65 in-lb)
T2: 7.8 N-m (0.80 kg-m, 69 in-lb)
T3: 15 N-m (1.5 kg-m, 11.0 in-lb)

Specifications

The following specifications are only those that are unique to the ZL900 model. For all other data refer to the base manual.

Switch and Sensors

Fan Switch (110°C):	Off → On	107 ~ 113°C (225 ~ 235°F)
	On → Off	above 103°C (217°F)
Water Temperature Switch (120°C):		
	On → Off	117 ~ 123°C (243 ~ 253°F)
	Off → On	above 113°C (235°F)

Alternator

Alternator Troubleshooting:

For any charging system problems, always check the charging system wiring first (see Wiring Inspection), and then check the system with the following tests shown in the troubleshooting guide.

Troubleshooting Guide

Test No.	Trouble	Symptoms
1	Battery discharged	Starter not turning
2	Battery overcharged	Electrolyte level lowering quickly
3	Noise	Alternator noise

Charging System Circuit

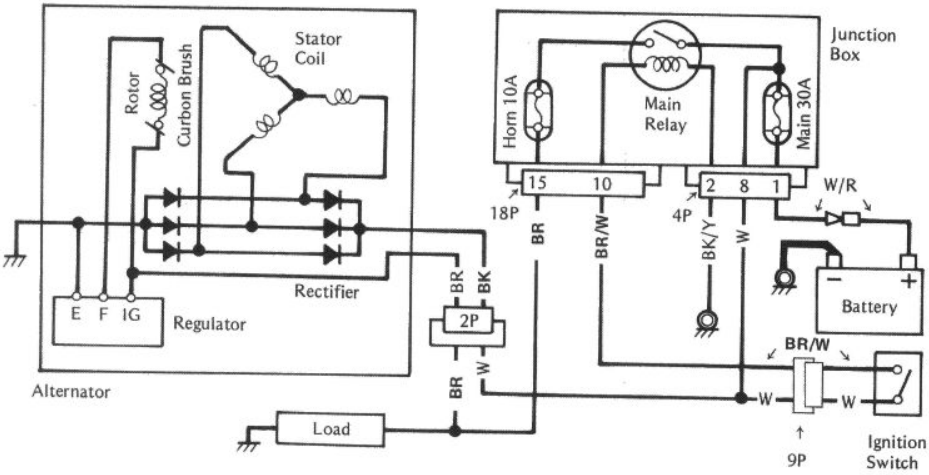

Ignition System

Part Removal:

Ignition Coil Removal/Installation Notes

Ignition coil removal/installation procedure for the ZL900 is the same for the ZX900, except following.

- Align the arrow mark on the flange of the spark plug cap with the arrow mark on the cylinder head cover (for No. 1 spark plug only).

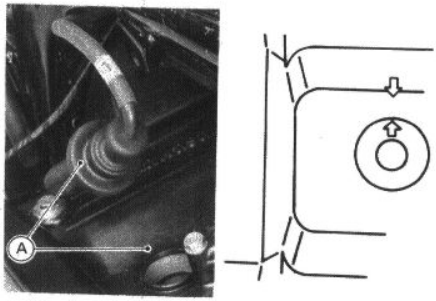

A. Align the marks.

Ignition System Wiring Diagram

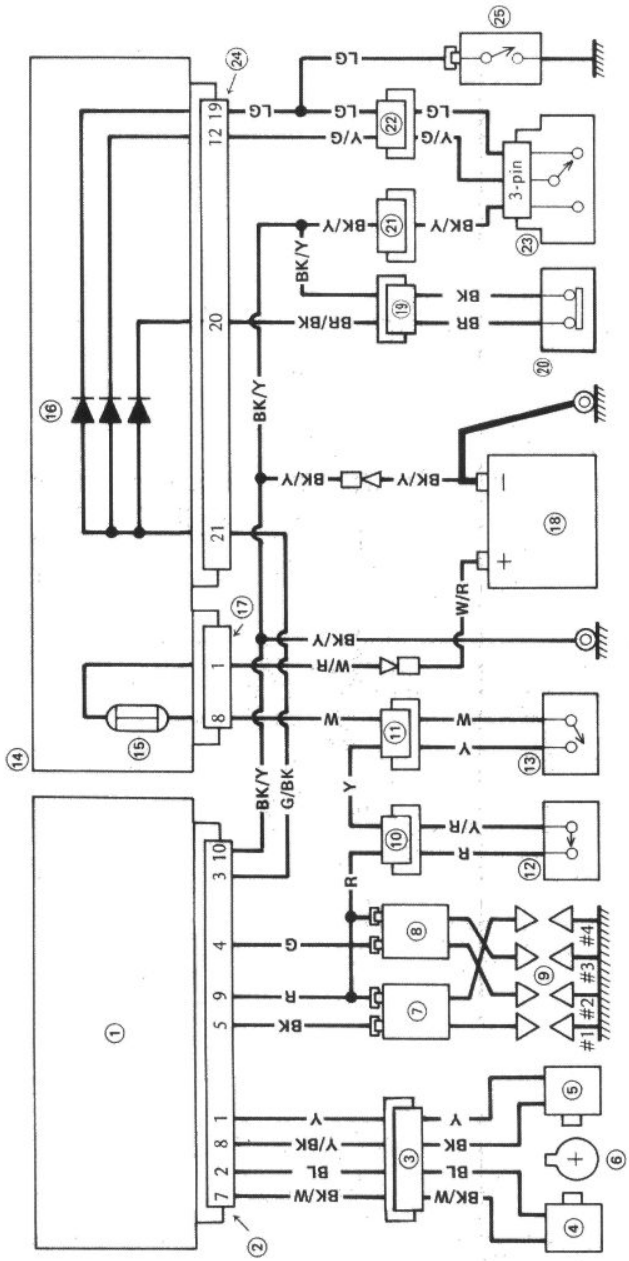

1. IC igniter
2. IC igniter 10-pin connector
3. Pickup coil 4-pin connector
4. Pickup coil for #2 and #3 cylinders
5. Pickup coil for #1 and #4 cylinders
6. Timing rotor
7. Ignition coil for #1 and #4 cylinders
8. Ignition coil for #2 and #3 cylinders
9. Spark plugs
10. Engine stop switch 6-pin connector
11. Ignition switch 9-pin connector
12. Engine stop switch
13. Ignition switch
14. Junction box
15. 30A fuse
16. Diodes
17. Junction box 4-pin connector
18. Battery
19. Side stand switch 2-pin connector
20. Side stand switch
21. LH switch 9-pin connector
22. Starter lockout switch 2-pin connector
23. Starter lockout switch
24. Junction box 18-pin connector
25. Neutral switch

Electric Starter System

Inspection:

Inspection procedure for the ZL900 is the same as for the ZX900 Refer to the following circuit diagram.

Electric Starter Circuit

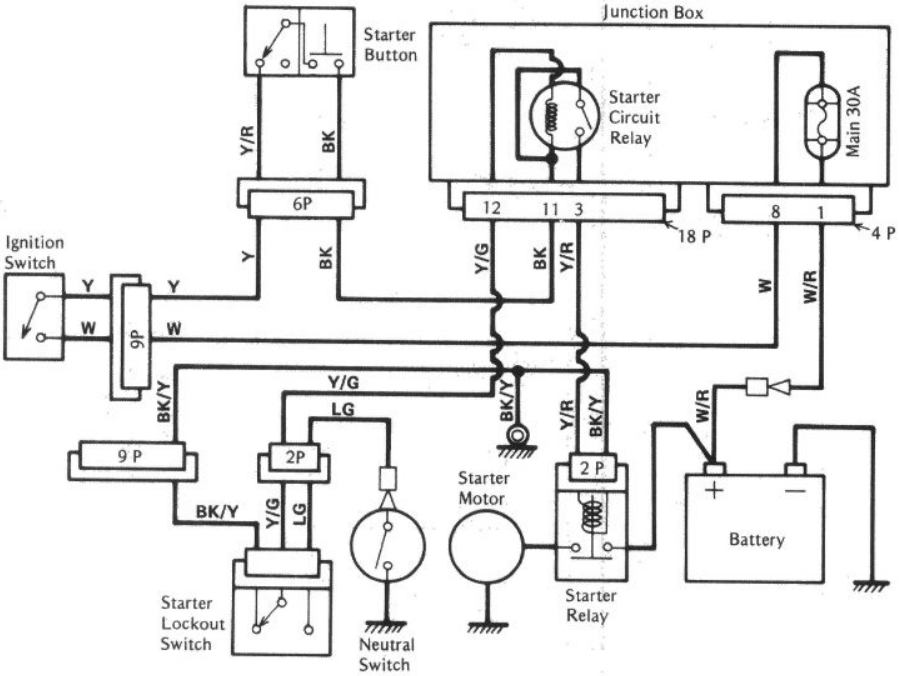

Lighting System

Adjustment:

The headlight beam is adjustable both horizontally and vertically. If not properly adjusted horizontally, the beam will point to one side rather than straight ahead. If adjusted too low vertically, neither low nor high beam will illuminate the road far enough ahead. If adjusted too high vertically, the high beam will fail to illuminate the road close ahead, and the low beam will dazzle oncoming drivers. In most areas it is illegal to ride with an improperly adjusted headlight.

Headlight Horizontal Adjustment

- Turn the small screw on the headlight rim in or out until the beam points straight ahead. Turning the adjusting screw clockwise makes the headlight beam to the right.

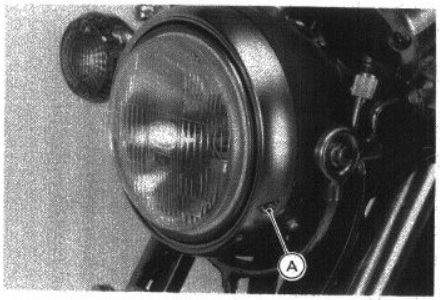

A. Adjusting Screw

Headlight Vertical Adjustment

- Remove the two screws from the lower side of the headlight housing, and remove the headlight unit.

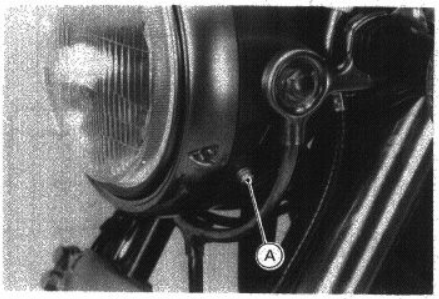

A. Screw

- Loosen the headlight housing mounting nuts, and adjust the headlight vertically.

NOTE

○*On high beam, the brightest point should be slightly below horizontal. Adjust the headlight to the proper angle according to local regulations. Adjust with normal operational weight loaded on the motorcycle.*

Vertical Adjustment

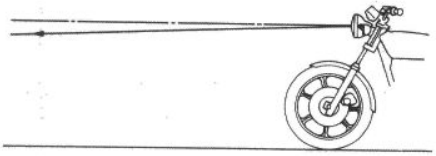

- Tighten the headlight housing mounting nuts, and remount the headlight unit.

Parts Removal:

Tail/Brake Light Bulb Replacement Notes

- Insert the new bulb by aligning the pins with the grooves in the walls of the socket so that the pin closest to the bulb base is to the upper right.

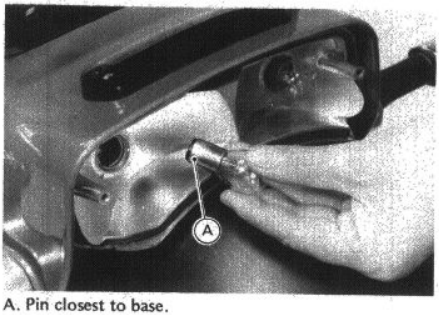

A. Pin closest to base.

License Plate Light Bulb Replacement Notes

- Be careful not to overtighten the lens mounting screws.

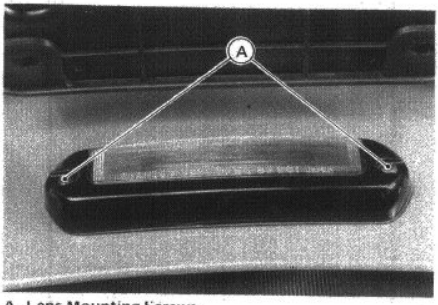

A. Lens Mounting Screws

Inspection:

Headlight Reserve Lighting System Inspection

- Inspection procedure for the ZL900 is the same as for the ZX900. Refer to the following wiring diagram.

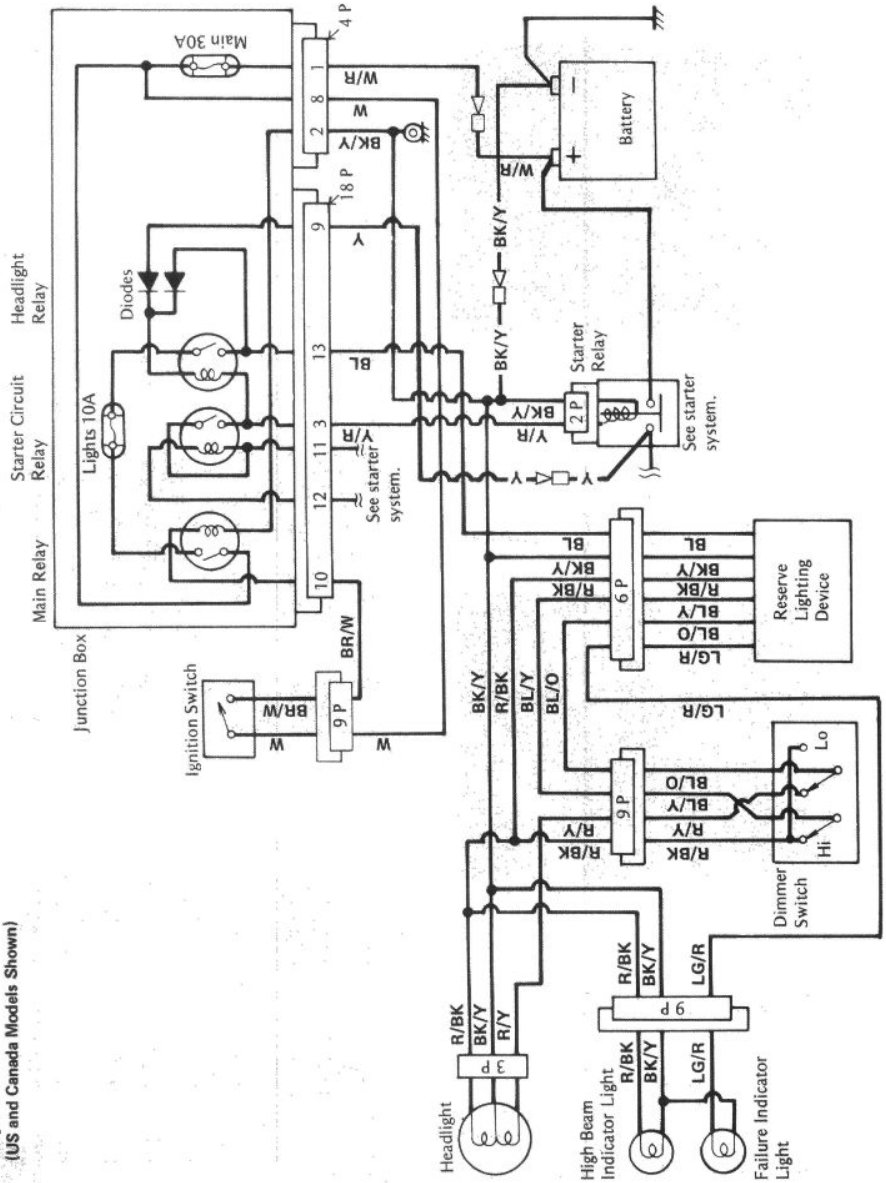

Cooling Fan System

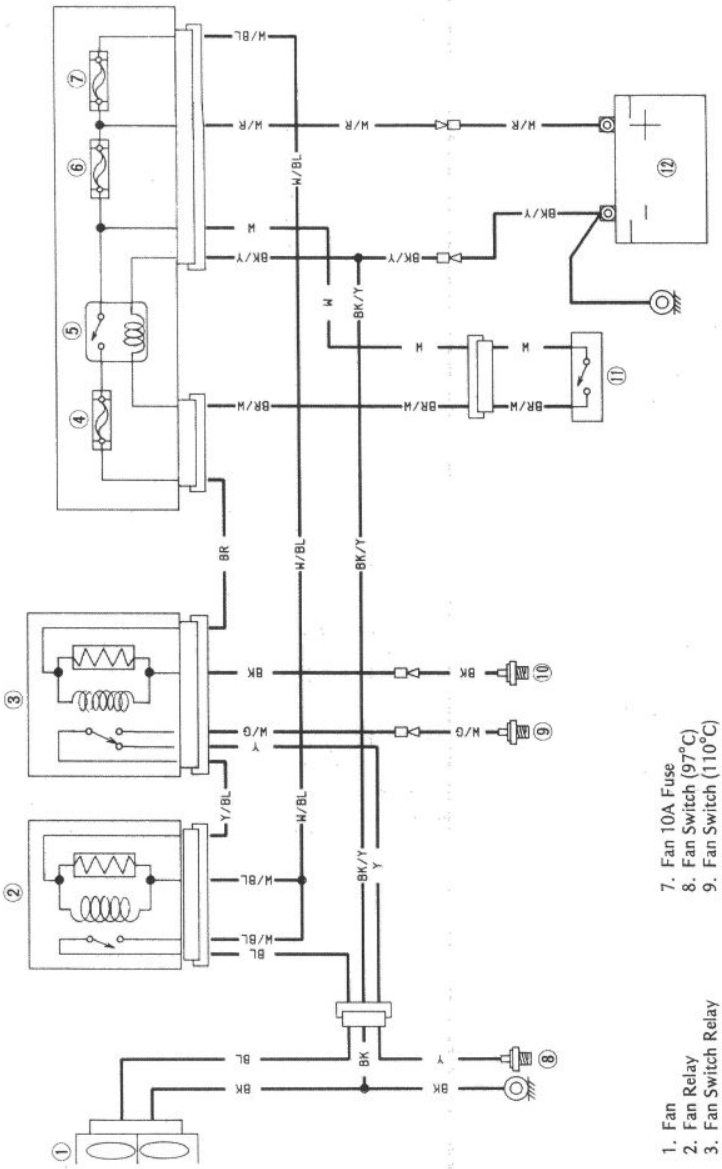

Cooling Fan System Wiring

1. Fan
2. Fan Relay
3. Fan Switch Relay
4. Horn 10A Fuse
5. Main Relay
6. Main 30A Fuse
7. Fan 10A Fuse
8. Fan Switch (97°C)
9. Fan Switch (110°C)
10. Engine Oil Temperature Switch
11. Ignition Switch
12. Battery

Fan System Circuit Inspection

- Remove the fuel tank.
- Disconnect the female 6-pin connector from the fan switch relay
- Ground the yellow/blue wire to the engine with a suitable wire.

★If the fan turns, inspect the following.
Wires and Connectors
Junction Box Parts
Fan Switch Relay
Switches (Fan Switches and Oil Temperature Switch)

★If the fan does not turn, inspect the following.
Wires and Connectors
Junction Box Parts
Fan Relay
Fan

Fan Inspection

- Remove the radiator (see Radiator Removal Note in the Cooling System chapter).
- Disconnect the 3-pin connector in the fan leads.
- Using two auxiliary wires, supply battery power to the fan.

Wire Connections

Blue Lead ⟷ Battery (+)
Black Lead ⟷ Battery (–)

★If the fan does not turn at this time, the fan is defective and must be replaced.

Meters and Indicators

Tachometer Circuit

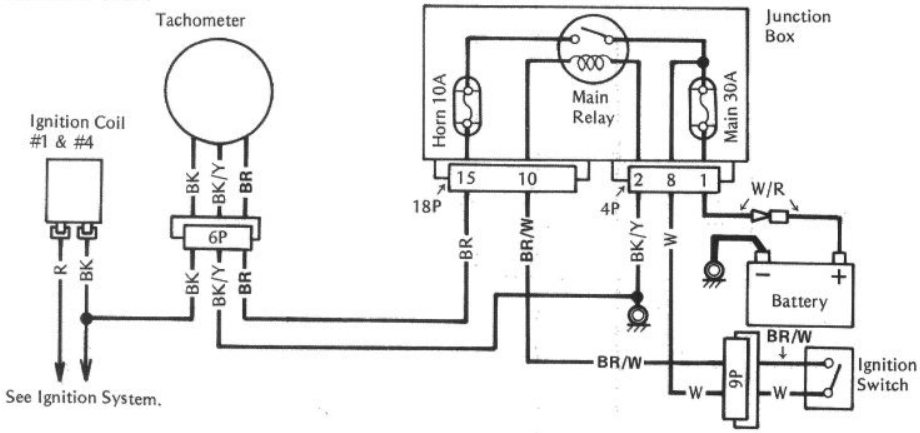

Parts Removal:
Meter and Indicator Removal/Installation Note

CAUTION

○**Place the meter so that the face is up. If a meter or gauge is left upside down or sideways for any length of time it will malfunction.**

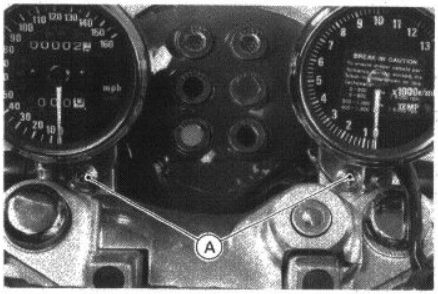

A. Meter Mounting Nuts

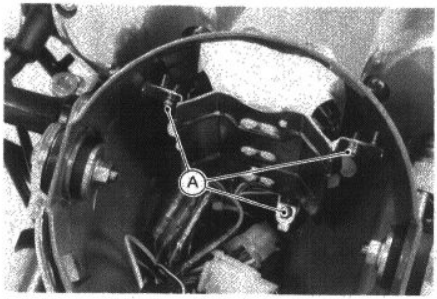

A. Indicator Light Clamp Bolts in the Headlight Housing

Bulb Replacement Notes

- To remove the wedge-base type bulbs (indicator and illumination), pull out the bulb sockets and pull the bulbs out of the sockets.

CAUTION

○**Do not use bulbs rated for greater wattage than the specified value, as the meter or gauge panel could become warped by excessive heat radiated from the bulbs.**

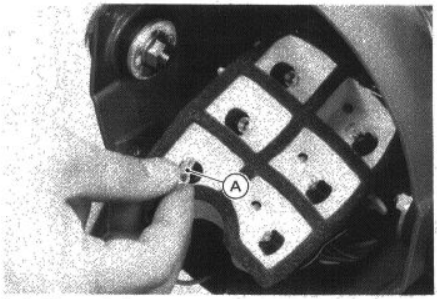

A. Indicator Bulb

Inspection:

Tachometer Inspection

NOTE

○*The tachometer inspection is explained on the assumption that the ignition system operates normally.*

- Check to see that the rubber dampers are installed in those positions (see Bulb Replacement Notes).
- ★Install new dampers if any are missing.
- Check to see that the rubber dampers at the meter mounting bracket are in good condition. They should not be hard or cracked.
- ★Replace any damaged rubber dampers with new ones.
- Check to see that all meter mounting bolts and nuts are tightened securely.
- ★Tighten any loose fasteners.
- Check the tachometer circuit wiring (see Wiring Inspection).
- ★If all wiring and components other than the tachometer unit check out good, the unit is defective.

Meters

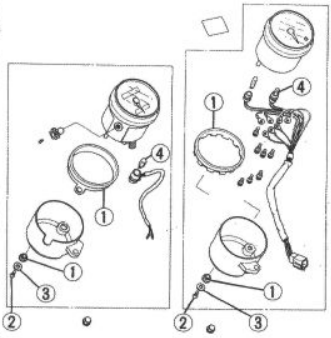

1. Damper
2. Screw
3. Washer
4. Illumination Light

Water Temperature Warning System Inspection

- Inspect the system wiring (see Wiring Inspection).
- Turn on the ignition switch.
- Disconnect the water temperature switch lead and oil pressure switch lead, then ground them to the frame.
- ★If the L.E.D. (Light Emitting Diode) is not lit, replace the tachometer.
- Open the oil pressure switch lead.
- ★If the L.E.D. is lit, replace the tachometer.
- Open the water temperature switch lead.
- If the L.E.D. is not lit, replace the tachometer.
- If the above check is OK, inspect the other parts (see Switch Inspection).

Water Temperature Warning System

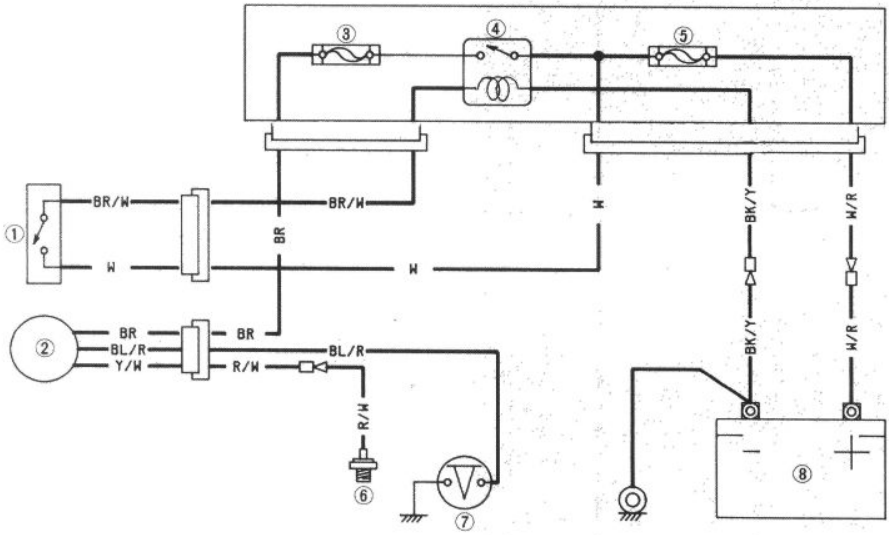

1. Ignition Switch
2. Warning Indicator
3. Horn 10A Fuse
4. Main Relay
5. Main 30A Fuse
6. Water Temperature Switch
7. Oil Pressure Switch
8. Battery

Switch and Sensors

Adjustment:

Rear Brake Light Switch Adjustment

- Remove the rear master cylinder cover (see Rear Master Cylinder Removal in the Brakes chapter).
- Loosen the adjusting plate mounting bolts, and position it to adjust the switch operation.

Parts Removal:

Removal/Installation Note

- Refer to the Exploded View for installation.

Inspection:

Switch Inspection

The following specifications are only those which are unique to the ZL900 model. For all other data refer to the base manual.

Brake Switch Adjustment

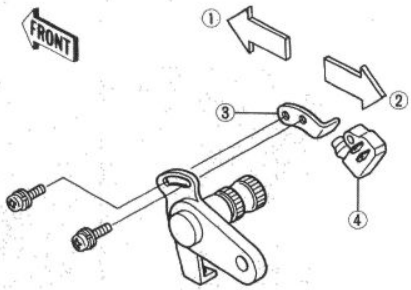

1. Lights later.
2. Lights sooner.
3. Adjusting Plate
4. Rear Brake Light Switch

Ignition Switch Connections

	BR/W	W	Y	BL	R	W/BK	O/G
OFF, LOCK							
ON	○	○	○	○	○	○	○
P(Park)		○	○	○	○	○	○

Starter Button Connections

	BK	R
Free		
Push on	○	○

Side Stand Switch Connections

	BR	BK
When side stand is up		
When side stand is down	○	○

Fan Switch (110°) Connections

○**Rising temperature: From OFF to ON at 107 ~ 113°C (225 ~ 235°F)**

○**Falling temperature: From ON to OFF above 103°C (217°F)**

ON: Less Than 0.5 Ω

OFF: More than 1 MΩ

Water Temperature Switch Connections

○**Rising temperature: From ON to OFF at 117 ~ 123°C (243 ~ 253°F)**

○**Falling temperature: From OFF to ON above 113°C (235°F)**

ON: Less than 0.5 Ω

OFF: More than 1 MΩ

Junction Box

Parts Removal:

Junction Box Removal/Installation Notes

- Remove the junction box cover.
- Unscrew the mounting bolts, and remove the junction box.
- Disconnect the connectors.

Junction Box

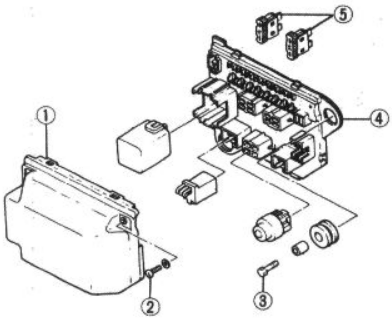

1. Mounting Bolts
2. Junction Box Cover
3. Mounting Bolts
4. Junction Box
5. Connectors

- Before installing the main harness female connectors to the junction box, clean away all old grease in the slot of female connectors.
- Fill grease in the slot of female connectors.

Female Connector

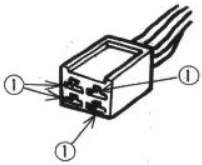

1. Fill grease.

Inspection:

Junction Box Internal Circuit Inspection

- Junction procedure for the ZL900 is the same as for the ZX900. Refer to the following circuit diagram.

Junction Box Internal Circuit

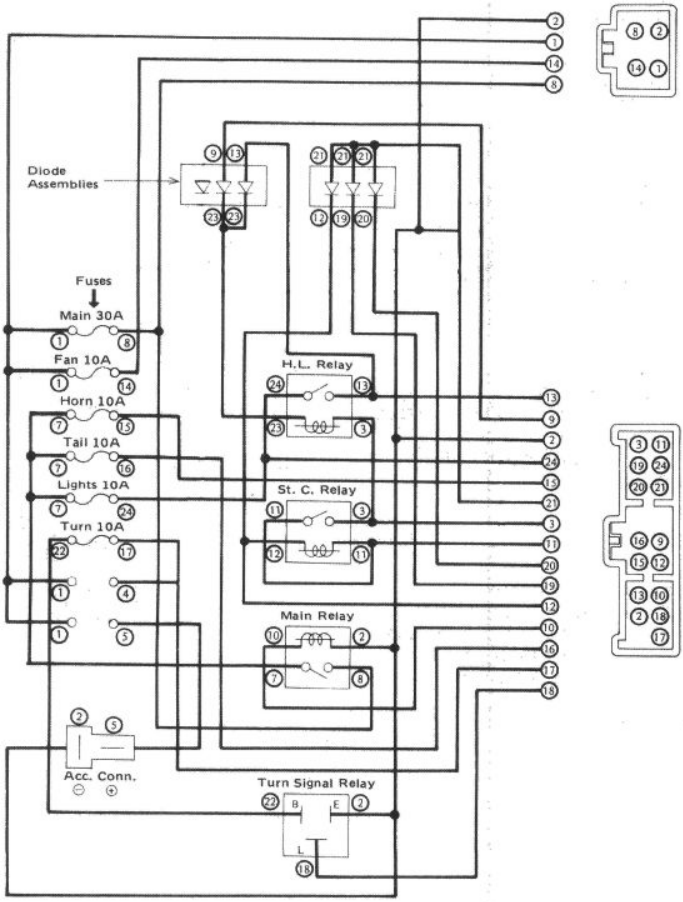

Electrical Wiring

Wiring Inspection

- Inspection procedure for the ZL900 is the same as for the ZX900. Refer to the following illustrations of wiring routing.

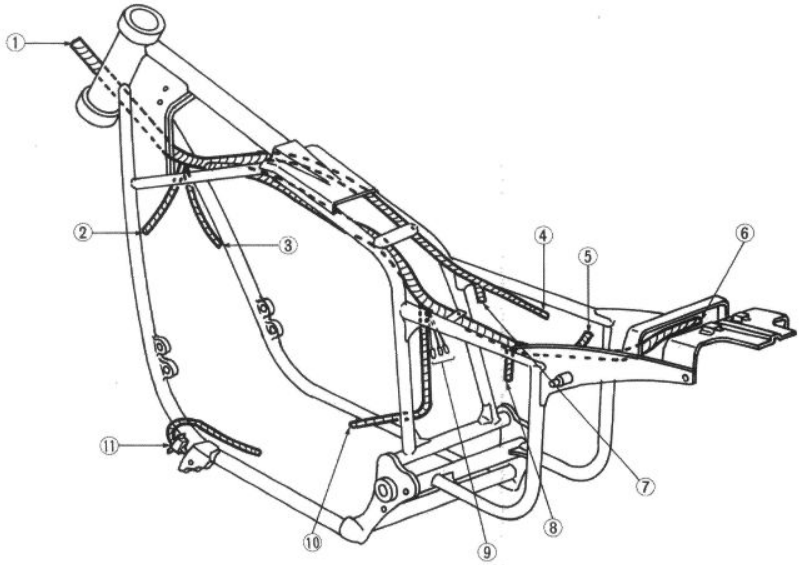

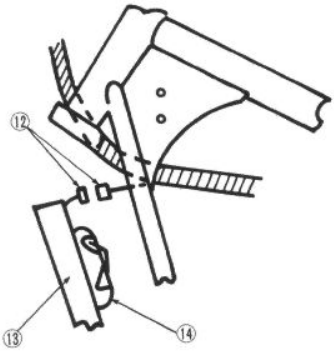

1. To the headlight.
2. To the left-hand horn.
3. To the right-hand horn.
4. To the headlight reserve lighting unit
5. To the license plate light.
6. To the tail/brake light.
7. To the rear brake light switch.
8. To the junction box.
9. To the alternator, pickup coil, and side stand switch.
10. To the engine.
11. Side Stand Switch
12. Connectors
13. Radiator
14. Cooling Fan

Appendix

Table of Contents

Additional Considerations for Racing

This motorcycle has been manufactured for use in a reasonable and prudent manner and as a vehicle only. However, some may wish to subject this motorcycle to abnormal operation, such as would be experienced under racing conditions. KAWASAKI STRONGLY RECOMMENDS THAT ALL RIDERS RIDE SAFELY AND OBEY ALL LAWS AND REGULATIONS CONCERNING THEIR MOTORCYCLE AND ITS OPERATION.

Racing should be done under supervised conditions, and recognized sanctioning bodies should be contacted for further details. For those who desire to participate in competitive racing or related use, the following technical information may prove useful. However, please note the following important points.

- You are entirely responsible for the use of your motorcycle under abnormal conditions such as racing, and Kawasaki shall not be liable for any damages which might arise from such use.
- Kawasaki's Limited Motorcycle Warranty and Limited Emission Control Systems Warranty specifically exclude motorcycles which are used in competitive or related uses. Please read the warranty carefully.
- Motorcycle racing is a very sophisticated sport, subject to many variables. The following information is theoretical only, and Kawasaki shall not be liable for any damages which might arise from alterations utilizing this information.
- When the motorcycle is operated on public roads, it **must** be in its original state in order to ensure safety and compliance with applicable regulations.

Carburetor:

Sometimes an alteration may be desirable for improved performance under special conditions when proper mixture is not obtained after the carburetor has been properly adjusted, and all parts cleaned and found to be functioning properly.

If the engine still exhibits symptoms of overly lean carburetion after all maintenance and adjustments are correctly performed, the main jet can be replaced with a smaller or larger one. A smaller numbered jet gives a leaner mixture and a larger numbered jet a richer mixture.

Spark Plug:

The spark plug ignites the fuel/air mixture in the combustion chamber. To do this effectively and at the proper time, the correct spark plug must be used, and the spark plug must be kept clean and adjusted.

Test have shown the plug listed in the "Electrical System" chapter to be the best plug for general use.

Since spark plug requirements change with the ignition and carburetion adjustments and with riding conditions, whether or not a spark plug of a correct heat range is used should be determined by removing and inspecting the plug.

When a plug of the correct heat range is being used, the electrodes will stay hot enough to keep all the carbon burned off, but cool enough to keep from damaging the engine and the plug itself. This temperature is about 400 – 800°C (750 – 1,450°F) and can be judged by noting the condition and color of the ceramic insulator around the center electrode. If the ceramic is clean and of a light brown color, the plug is operating at the right temperature.

A spark plug for higher operating temperatures is used for racing. Such a plug is designed for better cooling efficiency so that it will not overheat and thus is often called a "colder" plug. If a spark plug with too high a heat range is used – that is, a "cold" plug that cools iteself too well – the plug will stay too cool to burn off the carbon, and the carbon will collect on the electrodes and the ceramic insulator.

The carbon on the electrodes conducts electricity, and can short the center electrode to ground by either coating the ceramic insulator or bridging across the gap. Such a short will prevent an effective spark. Carbon build-up on the plug can also cause other troubles. It can heat up red-hot and cause preignition and knocking, which may eventually burn a hole in the top of the piston.

Spark Plug

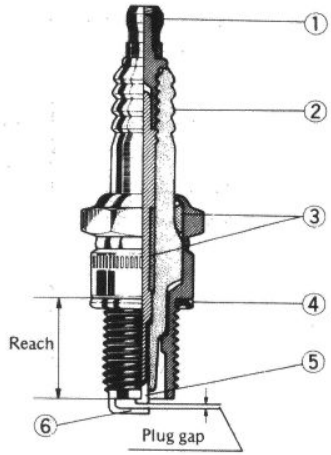

1. Terminal
2. Insulator
3. Cement
4. Gasket
5. Center electrode
6. Side electrode

Spark Plug Inspection

- Remove the spark plug and inspect the ceramic insulator.

Spark Plug Condition

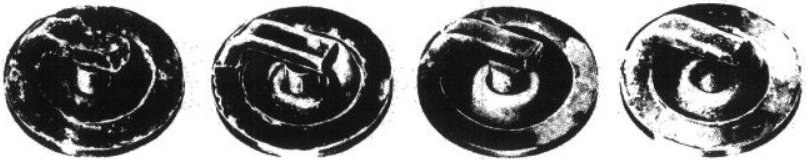

Carbon fouling | Oil fouling | Normal operation | Overheating

★Whether or not the right temperature plug is being used can be ascertained by noting the condition of the ceramic insulator around the electrode. A light brown color indicates the correct plug is being used. If the ceramic is white, the plug is operating at too high a temperature and it should be replaced with the next colder type.

CAUTION

- **If the spark plug is replaced with a type other than the standard plug, make certain the replacement plug has the same thread pitch and reach (length of threaded portion) and the same insulator type (regular type or projected type) as the standard plug.**
- **If the plug reach is too short, carbon will build up on the plug hole threads in the cylinder head, causing overheating and making it very difficult to insert the correct spark plug later.**
- **If the reach is too long, carbon will build up on the exposed spark plug threads causing overheating, preigniton, and possibly burning a hole in the piston top. In addition, it may be impossible to remove the plug without damaging the cylinder head.**

Plug Reach

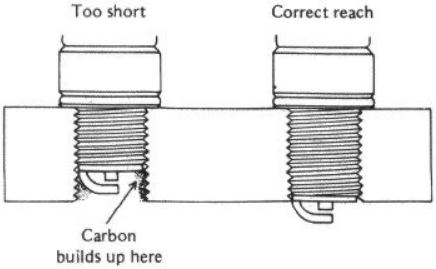

Standard Spark Plug Threads

Diameter:	**12 mm**
Pitch:	**1.25 mm**
Reach:	**19.0 mm**

NOTE

- *The heat range of the spark plug functions like a thermostat for the engine. Using the wrong type of spark plug can make the engine run too hot (resulting in engine damage) or too cold (with poor performance, misfiring, and stalling).*

Troubleshooting Guide

NOTE

○*This is not an exhaustive list, giving every possible cause for each problem listed. It is meant simply as a rough guide to assist the troubleshooting for some of the more common difficulties.*

Engine Doesn't Start, Starting Difficulty:

Starter motor not rotating:
- Starter lockout or neutral switch trouble
- Starter motor trouble
- Battery voltage low
- Relays not contacting or operating
- Starter button not contacting
- Wiring open or shorted
- Ignition switch trouble
- Engine stop switch trouble
- Fuse blown

Starter motor rotating but engine doesn't turn over:
- Starter motor clutch trouble

Engine won't turn over:
- Valve seizure
- Rocker arm seizure
- Cylinder, piston seizure
- Crankshaft seizure
- Connecting rod small end seizure
- Connecting rod big end seizure
- Transmission gear or bearing seizure
- Camshaft seizure
- Alternator shaft bearing seizure
- Balancer bearing seizure

No fuel flow:
- Fuel tap vacuum hose clogged
- Fuel tank air vent obstructed
- Fuel tap clogged
- Fuel line clogged
- Float valve clogged

Engine flooded:
- Fuel level in carburetor float bowl too high
- Float valve worn or stuck open
- Starting technique faulty
- (When flooded, crank the engine with the throttle fully open to allow more air to reach the engine.)

No spark; spark weak:
- Battery voltage low
- Spark plug dirty, broken, or maladjusted
- Spark plug cap or high tension wiring trouble
- Spark plug cap not in good contact
- Spark plug incorrect
- IC igniter trouble
- Neutral, starter lockout, or side stand switch trouble
- Pickup coil trouble
- Ignition coil trouble
- Ignition or engine stop switch shorted
- Wiring shorted or open
- Fuse blown

Compression Low:
- Spark plug loose
- Cylinder head not sufficiently tightened down
- No valve clearance
- Cylinder, piston worn
- Piston ring bad (worn, weak, broken, or sticking)
- Piston ring/land clearance excessive
- Cylinder head gasket damaged
- Cylinder head warped
- Valve spring broken or weak
- Valve not seating properly (valve bent, worn, or carbon accumulation on the seating surface)

Poor Running at Low Speed:

Spark weak:
- Battery voltage low
- Spark plug dirty, broken, or maladjusted
- Spark plug cap or high tension wiring trouble
- Spark plug cap shorted or not in good contact
- Spark plug incorrect
- IC igniter trouble
- Pickup coil trouble
- Ignition coil trouble

Fuel/air mixture incorrect:
- Pilot screw maladjusted
- Pilot jet, or air passage clogged
- Air bleed pipe bleed holes clogged
- Pilot passage clogged
- Air cleaner clogged, poorly sealed, or missing
- Starter plunger stuck open
- Fuel level in carburetor float bowl too high or too low
- Fuel tank air vent obstructed
- Carburetor holder loose
- Air cleaner duct loose

Compression low:
- Spark plug loose
- Cylinder head not sufficiently tightened down
- No valve clearance
- Cylinder, piston worn
- Piston ring bad (worn, weak, broken, or sticking)
- Piston ring/land clearance excessive
- Cylinder head warped
- Cylinder head gasket damaged
- Valve spring broken or weak
- Valve not seating properly (valve bent, worn, or carbon accumulation on the seating surface)

Other:
- IC igniter trouble
- Carburetors not synchronizing
- Vacuum piston doesn't slide smoothly
- Engine oil viscosity too high
- Drive train trouble
- Brake dragging
- Air suction valve trouble
- Vacuum switch valve trouble

Poor Running or No Power at High Speed:

Firing incorrect:
- Spark plug dirty, broken, or maladjusted
- Spark plug cap shorted or not in good contact

Spark plug incorrect
IC igniter trouble
Pickup coil trouble
Ignition coil trouble

Fuel/air mixture incorrect:
Starter plunger stuck open
Main jet clogged or wrong size
Jet needle or needle jet worn
Air jet clogged
Fuel level in carburetor float bowl too high or too low
Bleed holes of air bleed pipe or needle jet clogged
Air cleaner clogged, poorly sealed, or missing
Air cleaner duct poorly sealed
Water or foreign matter in fuel
Carburetor holder loose
Fuel tank air vent obstructed
Fuel tap clogged
Fuel line clogged

Compression low:
Spark plug loose
Cylinder head not sufficiently tightened down
No valve clearance
Cylinder, piston worn
Piston ring bad (worn, weak, broken, or sticking)
Piston ring/land clearance excessive
Cylinder head gasket damaged
Cylinder head warped
Valve spring broken or weak
Valve not seating properly (valve bent, worn, or carbon accumulation on the seating surface.)

Knocking:
Carbon built up in combustion chamber
Fuel poor quality or incorrect
Spark plug incorrect
IC igniter trouble

Miscellaneous:
Throttle valve won't fully open
Vaccum piston doesn't slide smoothly
Brake dragging
Clutch slipping
Overheating
Engine oil level too high
Engine oil viscosity too high
Drive train trouble
Air suction valve trouble
Vacuum switch valve trouble

Overheating:

Firing incorrect:
Spark plug dirty, broken, or maladjusted
Spark plug incorrect
IC igniter trouble

Fuel/air mixture incorrect:
Main jet clogged or wrong size
Fuel level in carburetor float bowl too low
Carburetor holder loose
Air cleaner poorly sealed, or missing
Air cleaner duct poorly sealed
Air cleaner clogged

Compression high:
Carbon built up in combustion chamber

Engine load faulty:
Clutch slipping
Engine oil level too high
Engine oil viscosity too high
Drive train trouble
Brake dragging

Lubrication inadequate:
Engine oil level too low
Engine oil poor quality or incorrect

Coolant incorrect:
Coolant level too low
Coolant deteriorated

Cooling system component incorrect:
Radiator clogged
Thermostat trouble
Radiator cap trouble
Thermostatic fan switch trouble
Fan relay trouble
Fan motor broken
Fan blade damaged
Water pump not turning
Water pump impeller damaged

Over Cooling:

Gauge incorrect:
Water temperature sensor broken

Cooling system component incorrect:
Thermostatic fan switch trouble
Thermostat trouble

Clutch Operation Faulty:

Clutch slipping:
Friction plate worn or warped
Steel plate worn or warped
Clutch spring broken or weak
Clutch release mechanism trouble
Clutch hub or housing unevenly worn

Clutch not disengaging properly:
Clutch plate warped or too rough
Clutch spring tension uneven
Engine oil deteriorated
Engine oil viscosity too high
Engine oil level too high
Clutch housing frozen on drive shaft
Clutch release mechanism trouble
Clutch hub locknut loose
Air in the clutch fluid line
Clutch fluid leak
Clutch fluid deteriorated
Primary or secondary cup damaged
Master cylinder scratched inside

Gear Shifting Faulty:

Doesn't go into gear; shift pedal doesn't returns:
Clutch not disengaging
Shift fork bent or seized
Gear stuck on the shaft

Gear positioning lever binding
Neutral positioning lever binding
Shift return spring weak or broken
Shift return spring pin loose
Shift mechanism arm spring broken
Shift mechanism arm broken
Shift pawl broken

Jumps out of gear:
Shift fork worn
Gear groove worn
Gear dogs and/or dog holes worn
Shift drum groove worn
Gear positioning lever spring weak or broken
Shift fork pin worn
Drive shaft, output shaft, and/or gear splines worn

Overshifts:
Gear positioning lever spring weak or broken
Shift mechanism arm spring broken

Abnormal Engine Noise:

Knocking:
IC igniter trouble
Carbon built up in combustion chamber
Fuel poor quality or incorrect
Spark plug incorrect
Overheating

Piston slap:
Cylinder/piston clearance excessive
Cylinder, piston worn
Connecting rod bent
Piston pin, piston holes worn

Valve noise:
Valve clearance incorrect
Valve spring broken or weak
Camshaft bearing worn

Other noise:
Connecting rod small end clearance excessive
Connecting rod big end clearance excessive
Piston ring worn, broken or stuck
Piston seizure, damage
Cylinder head gasket leaking
Exhaust pipe leaking at cylinder head connection
Crankshaft runout excessive
Engine mounts loose
Crankshaft bearing worn
Primary gear worn or chipped
Camshaft chain tensioner trouble
Camshaft chain, sprocket, guide worn
Air suction valve damaged
Vacuum switch valve damaged
Alternator shaft coupling rubber damper damaged
Alternator shaft chain tensioner trouble
Alternator shaft chain, sprocket, guide worn

Abnormal Drive Train Noise:

Clutch noise:
Weak or damaged rubber damper
Clutch housing/friction plate clearance excessive
Clutch housing gear worn

Transmission noise:
Bearings worn
Transmission gears worn or chipped
Metal chips jammed in gear teeth
Engine oil insufficient

Drive line noise:
Bevel gear bearings worn
Bevel gears worn or chipped
Bevel gears maladjusted
Rear wheel coupling damaged
Insufficient lubricant

Abnormal Frame Noise:

Front fork noise:
Oil insufficient or too thin
Spring weak or broken

Rear shock absorber noise:
Shock absorber damaged

Disc brake noise:
Pad installed incorrectly
Pad surface glazed
Disc warped
Caliper trouble

Other noise:
Bracket, nut, bolt, etc. not properly mounted or tightened

Oil Pressure Warning Light Goes On:

Engine oil pump damaged
Engine oil screen clogged
Engine oil level too low
Engine oil viscosity too low
Camshaft bearings worn
Crankshaft bearings worn
Oil pressure switch damaged
Wiring damaged
Relief valve stuck open
O-ring at the oil pipe in the crankcase damaged

Exhaust Smokes Excessively:

White smoke:
Piston oil ring worn
Cylinder worn
Valve oil seal damaged
Valve guide worn
Cylinder head gasket damaged
Engine oil level too high

Black smoke:
Air cleaner clogged
Main jet too large or fallen off
Starter plunger stuck open
Fuel level in carburetor float bowl too high

Brown smoke:
Main jet too small
Fuel level in carburetor float bowl too low
Air cleaner duct loose
Air cleaner poorly sealed or missing

Handling and/or Stability Unsatisfactory:

Handlebar hard to turn:

Steering stem locknut too tight
Bearing damaged
Steering bearing lubrication inadequate
Steering stem bent
Tire air pressure too low

Handlebar shakes or excessively vibrates:

Tire worn
Swing arm pivot bearing worn
Rim warped, or not balanced
Wheel bearing worn
Handlebar clamp loose
Steering stem head bolt loose

Handlebar pulls to one side:

Frame bent
Wheel misalignment
Swing arm bent or twisted
Steering maladjusted
Front fork bent
Right/left fork legs unbalanced (oil level, air pressure)

Shock absorption unsatisfactory:

(Too hard)
Front fork oil excessive
Front fork oil viscosity too high
Front fork air pressure too high
Rear shock absorber air pressure too high
Tire air pressure too high
Front fork bent
(Too soft)
Front fork oil insufficient and/or leaking
Front fork oil viscosity too low
Front fork, rear shock absorber spring weak
Rear shock absorber oil leaking

Brake Doesn't Hold:

Air in the brake line
Pad or disc worn
Brake fluid leak
Disc warped
Contaminated pad
Brake fluid deteriorated
Primary or secondary cup damaged
Master cylinder scratched inside

Battery Discharged:

Battery faulty (e.g., plates sulphated, shorted through sedimentation, electrolyte level too low)
Batterly leads making poor contact
Load excessive (e.g., bulb of excessive wattage)
Ignition switch trouble
Alternator trouble
Wiring faulty

Battery Overcharged:

Alternator trouble

General Lubrication

Lubrication

- Before lubricating each part, clean off any rusty spots with rust remover and wipe off any grease, oil, dirt, or grime.
- Lubricate the points listed below with indicated lubricant.

NOTE

○*Whenever the vehicle has been operated under wet or rainy conditions, or especially after using a high-pressure spray water, perform the general lubrication.*

Pivots: Lubricate with Motor Oil.

Clutch Lever
Front Brake Lever
Rear Brake Pedal
Rear Brake Rod Joint
Side Stand
Shift Pedal

Points: Lubricate with Grease.

Throttle Inner Cable Lower Ends
Throttle Inner Cable Upper Ends
Speedometer Inner Cable*
Choke Inner Cable Upper End
Choke Inner Cable Lower End
Handlebar Throttle Grip Portion

*Grease the lower part of the inner cable sparingly.

Cables: Lubricate with Motor Oil.

Choke Cable
Throttle Cables

Cable Lubrication

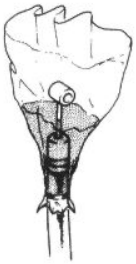

Nut, Bolt, and Fastener Tightness

Tightness Inspection

- Check the tightness of the bolts and nuts listed here. Also, check to see that each cotter pin is in place and in good condition.

NOTE

○*Check engine fastener tightness when the engine is cold (at room temperature).*

○If there are loose fasteners, retighten them to the specified torque following the specified tightening sequence. Refer to the appropriate chapter for torque specifications. If torque specifications are not in the appropriate chapter, see the Standard Torque Table. First loosen each fastener by ½ turn, then tighten it.

★If cotter pins are damaged, replace them with new ones.

Nut, Bolt, and Fastener to be checked

Wheels:
- Front Axle Nut
- Front Axle Clamp Nut
- Rear Axle Nut
- Rear Axle Nut Cotter Pin

Brakes:
- Front Master Cylinder Clamp Bolts
- Front Caliper Mounting Bolts
- Rear Master Cylinder Mounting Bolt
- Rear Caliper Holder Fixing Bolt
- Brake Lever Pivot Nut
- Brake Pedal Bolt
- Brake Rod Joint Cotter Pin

Suspension:
- Front Fork Clamp Bolts
- Front Fender Mounting Bolts
- Rear Shock Absorber Nuts
- Swing Arm Pivot Shaft Locknuts

Steering:
- Stem Head Bolt
- Handlebar Clamp Bolts

Engine:
- Engine Mounting Nuts
- Engine Mounting Bracket Nuts
- Muffler Connecting Pipe Clamp Bolts
- Muffler Mounting Nuts
- Muffler Mounting Bolts
- Exhaust Pipe Holder Nuts
- Shift Pedal Bolt
- Clutch Master Cylinder Clamp Bolts
- Clutch Lever Pivot Nut

Others:
- Side Stand Pivot Nut
- Front Footpeg Circlips
- Rear Footpeg Circlips
- Right Switch Housing Screws
- Front Footpeg Bracket Bolts
- Rear Footpeg Bracket Bolts
- Right Down Tube Mounting Bolts

Standard Torque Table

This table relating tightening torque to thread diameter, lists the basic torque for bolts and nuts. Use this table for only the bolts and nuts which do not require a specific torque value. Refer to each chapter for reference to these features. All of the values are for use with dry solvent-cleaned threads.

General Fasteners

Threads dia. (mm)	Torque		
	N-m	kg-m	ft-lb
5	3.4 – 4.9	0.35 – 0.50	30 – 43 in-lb
6	5.9 – 7.8	0.60 – 0.80	52 – 69 in-lb
8	14 – 19	1.4 – 1.9	10.0 – 13.5
10	25 – 39	2.6 – 3.5	19.0 – 25
12	44 – 61	4.5 – 6.2	33 – 45
14	73 – 98	7.4 – 10.0	54 – 72
16	115 – 155	11.5 – 16.0	83 – 115
18	165 – 225	17.0 – 23	125 – 165
20	225 – 325	23 – 33	165 – 240

Unit Conversion Table

Prefixes for Units:

Prefix	Symbol	Power
mega	M	x 1,000,000
kilo	k	x 1,000
centi	c	x 0.01
milli	m	x 0.001
micro	μ	x 0.000001

Units of Mass:

kg	x	2.205	=	lb
g	x	0.03527	=	oz

Units of Volume:

L	x	0.2642	=	gal (US)
L	x	0.2200	=	gal (imp)
L	x	1.057	=	qt (US)
L	x	0.8799	=	qt (imp)
L	x	2.113	=	pint (US)
L	x	1.816	=	pint (imp)
mL	x	0.03381	=	oz (US)
mL	x	0.02816	=	oz (imp)
mL	x	0.06102	=	cu in

Units of Force:

N	x	0.1020	=	kg
N	x	0.2248	=	lb
kg	x	9.807	=	N
kg	x	2.205	=	lb

Units of Length:

km	x	0.6214	=	mile
m	x	3.281	=	ft
mm	x	0.03937	=	in

Units of Torque:

N-m	x	0.1020	=	kg-m
N-m	x	0.7376	=	ft-lb
N-m	x	8.851	=	in-lb
kg-m	x	9.807	=	N-m
kg-m	x	7.233	=	ft-lb
kg-m	x	86.80	=	in-lb

Units of Pressure:

kPa	x	0.01020	=	kg/cm^2
kPa	x	0.1450	=	psi
kPa	x	0.7501	=	cm Hg
kg/cm^2	x	98.07	=	kPa
kg/cm^2	x	14.22	=	psi
cm Hg	x	1.333	=	kPa

Units of Speed:

km/h	x	0.6214	=	mph

Units of Power:

kW	x	1.360	=	PS
kW	x	1.341	=	HP
PS	x	0.7355	=	kW
PS	x	0.9863	=	HP

Units of Temperature:

$$\frac{9\,(°C + 40)}{5} - 40 = °F \qquad \frac{5\,(°F + 40)}{9} - 40 = °C$$

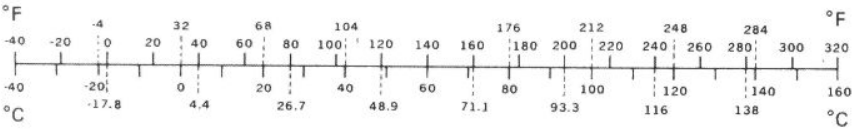

Supplement—ZL1000-A1

This chapter is designed to be used in conjunction with the front part of this Service Manual Supplement (up to pg. 17-10) and the ZX900 Motorcycle Service Manual (P/N 99924-1048-01). The maintenance and repair procedures described in this chapter are only those that are unique to ZL1000-A1 motorcycle. Most service operations for this model remain identical to those described in the Base Service Manual and the front part of this manual (up to pg. 17-10). Complete and proper servicing of the ZL1000-A1 motorcycle therefore requires both this Supplement and the Base Service Manual.

Table of Contents

General Information

Model Identification

ZL1000-A1 Left Side View:

ZL1000-A1 Right Side View:

General Specifications

Items			ZL1000-A1
Dimensions:			
Overall length			2,305 mm
Overall width			790 mm
Overall height			1,150 mm
Wheelbase			1,615 mm
Road clearance			155 mm
Seat height			750 mm
Dry weight			2,380 N (243 kg), (Cal) 2,390 N (244 kg)
Curb weight:	Front		1,220 N (124 kg)
	Rear		1,430 N (146 kg), (Cal) 1,440 N (147 kg)
Fuel tank capacity			18.5 L
Performance:			
Climbing ability			30°
Braking distance			12.5 m from 50 km/h
Minimum turning radius			3.0 m
Engine:			
Type			4-stroke, DOHC, 4-cylinder
Cooling system			Liquid-cooled
Bore and stroke			74.0 x 58.0 mm
Displacement			997 mL
Compression ratio			10.2
Maximum horsepower			80.9 kW (110 PS) @9,000 r/min (rpm)
Maximum torque			91.2 N-m (9.3 kg-m, 67.3 ft-lb) @7,000 r/min (rpm)
Carburetor system			Carburetors, Keihin CVK 34 x 4
Starting system			Electric starter
Ignition system			Battery and coil (transistorized)
Timing advance			Electronically advanced
Ignition timing			From 10° BTDC @1,000 ((Cal) 1,200) r/min (rpm) to 35° BTDC @3,500 r/min (rpm)
Spark plug			NGK D8EA or ND X24ES-U (C) NGK DR8ES-L or ND X24ESR-U
Cylinder numbering method			Left to right, 1-2-3-4
Firing order			1-2-4-3
Valve timing:	Inlet	Open	37.5° BTDC
		Close	57.5° ABDC
		Duration	275°
	Exhaust	Open	57.5° BBDC
		Close	37.5° ATDC
		Duration	275°
Lubrication system			Forced lubrication (wet sump)
Engine oil:	Grade		SE or SF class
	Viscosity		SAE 10W40, 10W50, 20W40, or 20W50
	Capacity		3.7 L

Items		ZL1000-A1
Drive Train:		
Primary reduction system:	Type	Gear
	Reduction ratio	1.732 (97/56)
Clutch type		Wet multi disc
Transmission:	Type	6-speed, constant mesh, return shift
	Gear ratios: 1st	2.800 (42/15)
	2nd	2.000 (38/19)
	3rd	1.590 (35/22)
	4th	1.333 (32/24)
	5th	1.153 (30/26)
	6th	1.035 (29/28)
Final drive system:	Type	Shaft
	Reduction ratio	2.994 (16/19 x 32/9)
	Overall drive ratio	5.371 @Top gear
Final gear case oil:	Type	API GL-5 Hypoid gear oil SAE 90 (above 5°C) SAE 80 (below 5°C)
	Capacity	220 mL
Frame:		
Type		Tubular, double cradle
Caster (rake angle)		29°
Trail		102 mm
Front tire:	Type	Tubeless
	Size	100/90-18 56H
Rear tire:	Type	Tubeless
	Size	160/80-15 74H
Front suspension:	Type	Telescopic fork (pneumatic)
	Wheel travel	150 mm
Rear suspension:	Type	Swing arm (pneumatic)
	Wheel travel	110 mm
Brake type:	Front	Dual disc
	Rear	Single disc
Electrical Equipment:		
Battery		12 V 14 Ah
Headlight:	Type	Semi-sealed beam
	Bulb	12 V 60/55 W (quarts-halogen)
Tail/brake light		12 V 8/27 W x2
Alternator:	Type	Three-phase AC
	Rated output	25 A @6,000 r/min (rpm), 14 V
Voltage regulator:	Type	Short-circuit

Specifications subject to change without notice, and may not apply to every country.

Ⓒ : Canadian Model
(Cal): Californian Model

Periodic Maintenance Chart

The scheduled maintenance must be done in accordance with this chart to keep the motorcycle in good running condition. **The initial maintenance is vitally important and must not be neglected.**

OPERATION \ FREQUENCY	Every (Whichever comes first)	800 km	5,000 km	10,000 km	15,000 km	20,000 km	25,000 km	30,000 km	See Page
		*ODEMETER READING							
Carburetor synchronization – check †		•	•	•	•	•	•	•	B.M. 2-7
Idle speed – check †		•	•	•	•	•	•	•	2-6
Throttle grip play – check †		•		•		•		•	2-5
Spark plug – clean and gap †			•	•	•	•	•	•	B.M. 16-23
Valve clearance – check †		•		•		•		•	B.M. 4-18
Air suction valve – check †			•	•	•	•	•	•	B.M. 4-7
Air cleaner element – clean		•		•		•		•	B.M. 2-13
Air cleaner element – replace	5 cleanings					•			B.M. 2-13
Fuel system – check †				•		•		•	B.M. 2-9
Evaporative emission control system (C) – check †		•	•	•	•	•	•	•	2-8
Battery electrolyte level – check †	month	•	•	•	•	•	•	•	B.M. 16-9
Brake light switch – check †		•	•	•	•	•	•	•	B.M. 16-34
Brake wear – check †			•	•	•	•	•	•	11-5
Brake/clutch fluid level – check †	month	•	•	•	•	•	•	•	B.M. 11-11/ B.M. 5-5
Brake/clutch fluid – change	2 years					•			B.M. 11-12/ B.M. 5-5
Steering – check †		•	•	•	•	•	•	•	13-3
Final gear case oil level – check †				•		•		•	10-5
Final gear case oil – change		•						•	10-5
Propeller shaft joint – lubricate				•				•	10-14
Nut, bolt, and fastener tightness – check †		•		•		•		•	17-8
Muffler connecting pipe clamp bolts and power chamber mounting bolts tightness – check †		•	•	•		•		•	4-6
Tire wear – check †			•	•	•	•	•	•	9-5
Engine oil – change	year	•		•		•		•	6-5
Oil filter – replace		•		•		•		•	6-5

OPERATION \ FREQUENCY	Whichever comes first ↓ Every	*ODOMETER READING → 800 km	5,000 km	10,000 km	15,000 km	20,000 km	25,000 km	30,000 km	See Page
General lubrication – perform			•	•	•	•	•	•	17-8
Front fork oil – change								•	12-4
Swing arm pivot – lubricate				•				•	12-12
Coolant – change	2 years							•	3-3
Radiator hoses, connections – check †	year	•		•		•		•	B.M. 3-10
Steering stem bearing – lubricate	2 years					•			B.M. 13-6
Brake/clutch master cylinder cup and dust seal– replace	2 years								B.M. 11-9/ B.M. 5-7
Caliper piston seal and dust seal – replace	2 years								B.M. 11-6
Clutch slave cylinder piston seal – replace	2 years								B.M. 5-8
Brake/clutch hose and pipe – replace	4 years								B.M. 11-15/ B.M. 5-7
Fuel hose – replace	4 years								

*: For higher odometer readings, repeat at the frequency interval established here.
† : Replace, add, adjust, clean, or torque if necessary.
(C): California vehicle only

Torque and Locking Agent

The following tables list the tightening torque for the major fasteners requiring use of a non-permanent locking agent or liquid gasket.

Letters used in the "Remarks" column mean:
L : Apply a non-permanent locking agent to the threads.
LG : Apply liquid gasket to the threads.
O : Apply an oil to the threads and seated surface.
S : Tighten the fasteners following the specified sequence.
St : Stake the fasteners to prevent loosening.

Fastener	Torque			Remarks
	N-m	kg-m	ft-lb	
Cooling System:				
Fan Switch (97°C)	7.4	0.75	65 in-lb	
Fan Switch (110°C)	7.4	0.75	65 in-lb	LG
Water Temperature Sensor	7.4	0.75	65 in-lb	LG
Bleeder Bolt	7.8	0.80	69 in-lb	
Drain Plugs	7.8	0.80	69 in-lb	
Engine Top End:				
Cylinder Head Cover Bolts	9.8	1.0	87 in-lb	
Upper Chain Guide Mounting Bolts	9.8	1.0	87 in-lb	
Rear Chain Guide Mounting Bolt	20	2.0	14.5	L
Chain Tensioner Mounting Bolts	9.8	1.0	87 in-lb	L
Camshaft Sprocket Bolts	15	1.5	11.0	L
Valve Clearance Adjusting Screw Locknuts	25	2.5	18.0	
Rocker Shaft (Small)	9.8	1.0	87 in-lb	
Main Oil Pipe Banjo Bolts	25	2.5	18.0	
Head Oil Pipe Bolts	9.8	1.0	87 in-lb	
Camshaft Cap Bolts	12	1.2	104 in-lb	S
Cylinder Head Bolts (10 mm Dia.)	39	4.0	29	S
When reusing any one of the following parts:				
Bolt	36	3.7	27	S
Washer				
Cylinder Head				
Cylinder Head Bolts (11 mm Dia.)	51	5.2	38	S
When reusing any one of the following parts:				
Bolt	48	4.9	35	S
Washer				
Cylinder Head				
Cylinder Head Bolt (6 mm Dia.)	9.8	1.0	87 in-lb	
Cylinder Bolts	15	1.5	11.0	
Drain Plugs	7.8	0.80	69 in-lb	
Exhaust Pipe Cover Mounting Bolts				L
Power Chamber Mounting Bolts				L

Fastener	Torque			Remarks
	N-m	kg-m	ft-lb	
Clutch:				
Clutch Hose Banjo Bolts	29	3.0	22	
Clutch Lever Pivot Nut	5.9	0.60	52 in-lb	
Clutch Master Cylinder Clamp Bolts	8.8	0.90	78 in-lb	
Clutch Hose Joint	18	1.8	13.0	
Clutch Slave Cylinder Bleeder Bolt	7.8	0.80	69 in-lb	
Clutch Slave Cylinder Mounting Bolts				L
Clutch Spring Retainer Bolt	11	1.1	95 in-lb	
Clutch Hub Nut	130	13.5	98	
Right Cover Bolts				L*1
Right Cover Damper Bolts				L
Engine Lubrication System:				
Oil Passage Plug	18	1.8	13.0	
Lower Crankcase Plug (25 mm Dia.)	18	1.8	13.0	
Crankcase Outside Oil Pipe Banjo Bolts	25	2.5	18.0	
Oil Pump Gear Holder Screws				L
Oil Pump Mounting Bolts	12	1.2	104 in-lb	L
Oil Pump Relief Valve				L
Main Oil Pipe Banjo Bolt	25	2.5	18.0	
Oil Pressure Switch	15	1.5	11.0	L
Oil Temperature Switch	9.8	1.0	87 in-lb	L
Oil Pan Bolts	15	1.5	11.0	L*2
Oil Filter Bolt	20	2.0	4.5	
Engine Removal/Installation:				
Engine Mounting Bolts/Nuts	34	3.5	25	
Engine Bracket Mounting Bolts	25	2.5	18.0	
Down Tube Mounting Bolts	32	3.3	24	
Crankshaft/Transmission:				
Connecting Rod Big End Cap Nuts	29	3.0	22	
When reusing an old nut.	26	2.7	19.5	
Timing Rotor Bolt	25	2.5	18.0	
Alternator Shaft Left End Bolt	25	2.5	18.0	
Alternator Coupling Brades Bolt	9.8	1.0	87 in-lb	
Alternator Shaft Chain Tensioner Mounting Bolts				L
Alternator Shaft Chain Guide Bolts				L
One-way Clutch Bolts	12	1.2	104 in-lb	L
Balancer Shaft Guide Pin Plate Bolt				L
Crankshaft Main Bearing Cap Bolts	27	2.8	20	
Crankcase Bolts (6 mm Dia.)	27	2.8	20	
Crankcase Bolts (8 mm Dia.)	15	1.5	11.0	
Shift Drum Ball Bearing Holder Allen Bolts				L
Shift Drum Pin Plate Screw				L
External Shift Mechanism Return Spring Pin				L

Fastener	Torque			Remarks
	N-m	kg-m	ft-lb	
Shift Pedal Pivot Bolt	25	2.5	18.0	L
Drive Shaft Left Side Damper Cam Nut	225	23.0	166	
Wheels/Tires:				
Front Axle Nut	88	9.0	65	
Tire Air Valve Nuts	1.5	0.15	13 in-lb	
Rear Axle Nut	110	11.0	80	
Final Drive:				
Front Drive Gear Nut	155	16.0	115	St, M
Front Driven Gear Bolt	122	12.0	87	St
Front Driven Gear Bearing Housing Bolts	9.8	1.0	87 in-lb	
Front Drive Gear Cap Bolts	9.8	1.0	87 in-lb	
Ring Gear Mounting Bolts (8 mm Dia.)	24	2.4	17.5	
Ring Gear Mounting Bolt (10 mm Dia.)	34	3.5	25	
Final Gear Case Mounting Studs				L
Final Gear Case Stud				L
Final Gear Case Mounting Nuts	29	3.0	22	
Pinion Gear Nut	120	12.0	87	St
Drive Shaft Left Side Damper Cam Nut	225	23.0	166	
Final Gear Case Oil Drain Bolt	17	1.7	12.0	
Brakes:				
Brake Lever Pivot Nut	5.9	0.60	52 in-lb	
Front Master Cylinder Clamp Bolts	8.8	0.90	78 in-lb	
Brake Hose Banjo Bolts	29	3.0	22	
Bleed Valves	7.8	0.80	69 in-lb	
Front Brake Caliper Mounting Bolts	32	3.3	24	
Disc Mounting Bolts	23	2.3	16.5	
Rear Caliper Bracket Mounting Bolt	69	7.0	51	
Rear Master Cylinder Mounting Bolts	23	2.3	16.5	
Rear Brake Fluid Reservoir Tank Mounting Bolt	23	2.3	16.5	
Rear Brake Caliper Mounting Bolts	32	3.3	24	
Suspension:				
Front Fork:				
Top Plugs	23	2.3	16.5	
Fork Clamp Bolts	21	2.1	15.0	
Drain Screws				LG
Bottom Allen Bolts	39	4.0	29	L
Axle Clamp Bolts	20	2.0	14.5	
Rear Shock Absorber:				
Shock Absorber Nuts	25	2.6	19.0	L
Swing Arm Pivot Shaft Retainer Mounting Bolts	13	1.3	113 in-lb	
Swing Arm Pivot Shaft Adjuster Bolt Locknuts	53	5.4	39	
Swing Arm Pivot Shaft Adjuster Bolts	18	1.8	13.0	

Fastener	Torque			Remarks
	N-m	kg-m	ft-lb	
Steering:				
Steering Stem Head Bolt	39	4.0	29	
Controls:				
Handlebar Clamp Bolts	23	2.3	16.5	
Electrical System:				
Alternator Mounting Bolts	25	2.5	18.0	L
Alternator Coupling Brades Bolt	9.8	1.0	87 in-lb	
Starter Motor Lead Terminal	4.9	0.50	43 in-lb	
Pickup Coil Cover Bolts				L*3
Spark Plugs	14	1.4	10.0	
Timing Rotor Bolt	25	2.5	18.0	
Alternator Cover Cap Nut	4.9	0.50	43 in-lb	
Fan Switch (97°C)	7.4	0.75	65 in-lb	
Fan Switch (110°C)	7.4	0.75	65 in-lb	LG
Water Temperature Sensor	7.8	0.80	69 in-lb	LG
Neutral Switch	15	1.5	11.0	
Oil Temperature Switch	7.8	0.80	69 in-lb	L
Oil Pressure Switch	15	1.5	11.0	L

*1 : Four of them require non-permanent locking agent (see Right Cover Installation Note in the base manual).
*2 : Three of them require non-permanent locking agent (see Oil Pan Installation Notes in the base manual).
*3 : Two of them require non-permanent locking agent (see Pickup Coil Removal/Installation Notes in the base manual).

This table relating tightening torque to thread diameter, lists the basic torque for bolts and nuts. Use this table for only the bolts and nuts which do not require a specific torque value.

General Fasteners

Threads dia. (mm)	Torque		
	N-m	kg-m	ft-lb
5	3.4 – 4.9	0.35 – 0.50	30 – 43 in-lb
6	5.9 – 7.8	0.60 – 0.80	52 – 69 in-lb
8	14 – 19	1.4 – 1.9	10.0 – 13.5
10	25 – 39	2.6 – 3.5	19.0 – 25
12	44 – 61	4.5 – 6.2	33 – 45
14	73 – 98	7.4 – 10.0	54 – 72
16	115 – 155	11.5 – 16.0	83 – 115
18	165 – 225	17.0 – 23	125 – 165
20	225 – 325	23 – 33	165 – 240

Cable Routing

Coolant Reservoir Tank Hose Routing

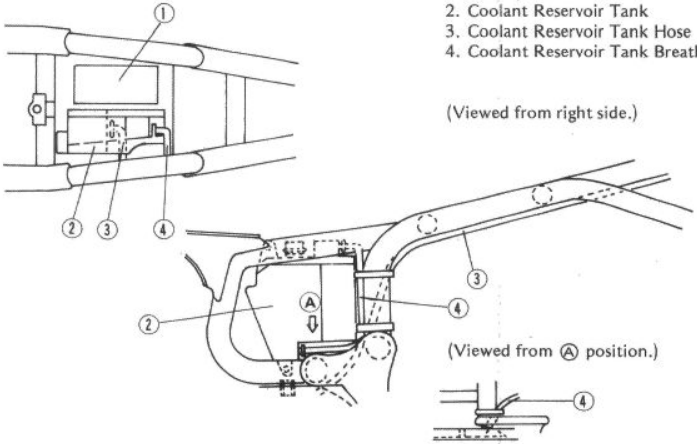

Clutch Pipe Routing

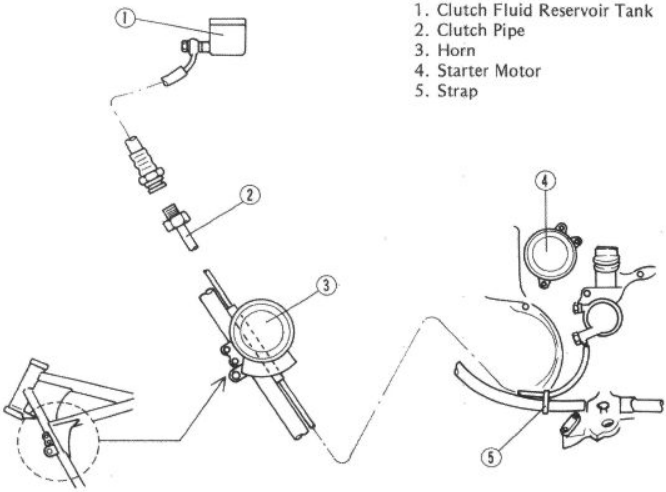

Electrical Wiring Routing

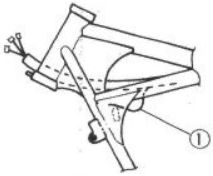

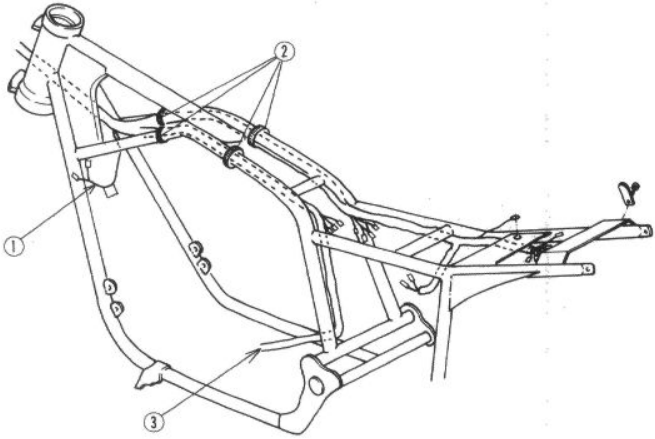

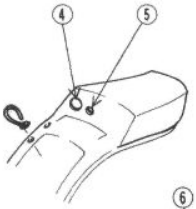

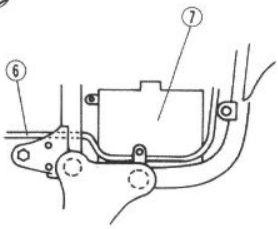

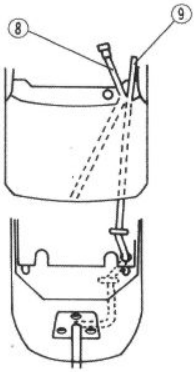

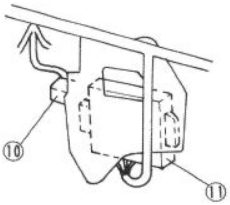

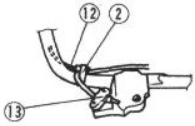

1. Horn Leads
2. Strap
3. To the engine.
4. Rout the following leads through this hole.
   Tail/Brake Light Lead
   License Plate Light Lead
   Rear Right Turn Signal Light Lead
5. Route the rear left turn signal light lead through this hole.
6. Starter Motor Lead
7. Battery Case
8. Tail/Brake Light Lead
9. License Plate Light Lead
10. Turn Signal Relay
11. Junction Box
12. Clutch Pipe
13. Side Stand Switch

Cable and Hoses Routing

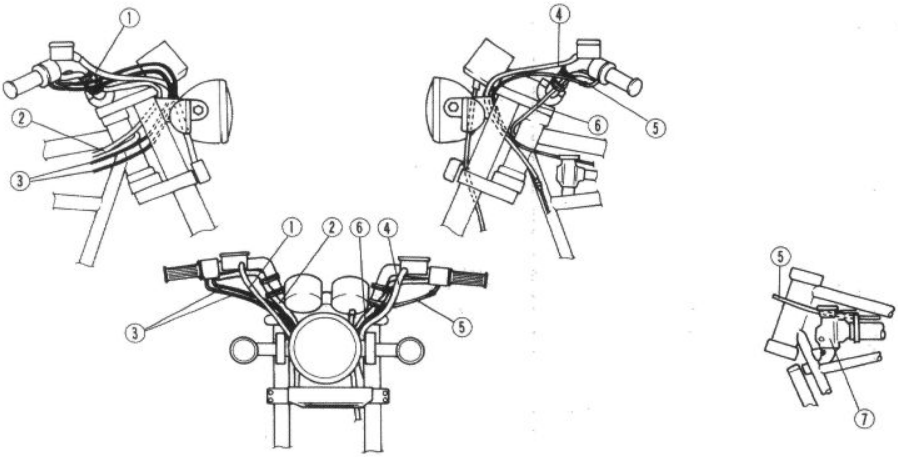

1. Brake Hose
2. Right Switch Housing Wiring Loom
3. Throttle Cable
4. Clutch Hose
5. Starter Cable
6. Left Switch Housing Wiring Loom
7. Thermostat Housing

Carburetor Air Breather Hose Routing

Other than Californian Model

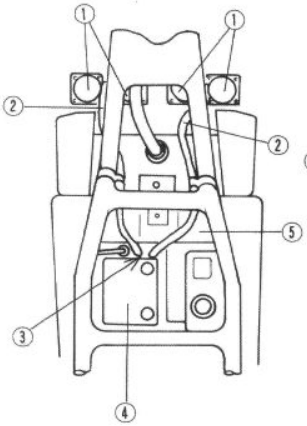

Californian Model

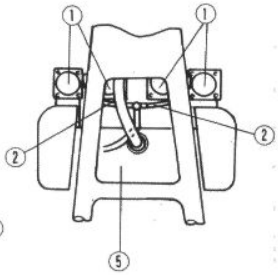

1. Carburetor
2. Air Breather Hose
3. Rout the hoses between the air cleaner housing and battery case.
4. Battery
5. Air Cleaner Housing

Evaporative Emission Control System

Hose Routing

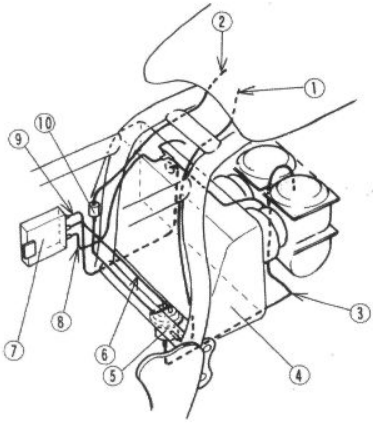

1. Fuel Return Hose (Red)
2. Breather Hose (Blue)
3. Vacuum Hose (White)
4. Air Cleaner Housing
5. Liquid/Vapor Separator
6. Breather Hose (Blue)
7. Canister
8. Breather Hose (Yellow)
9. Purge Hose (Green)
10. One-way Valve

Air Filter Housing Water Drain Hose Routing

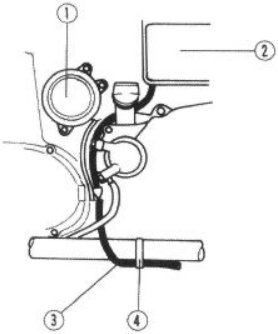

1. Starter Motor
2. Air Cleaner Housing
3. Air Cleaner Housing Water Drain Hose
4. Strap

Battery Breather Hose Routing

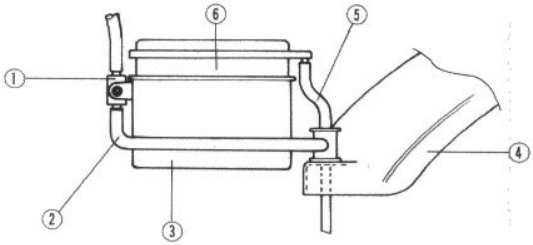

1. One-way Valve
2. Fuel Tank Water Drain Hose
3. Battery Case
4. Rear Fender Front Section
5. Battery Breather Hose
6. Battery

Fuel System

Specifications

Carburetor Specifications

Make/Type	Keihin/CVK 34
Main Jet	130, (Cal) 135 [128, (Cal) 132]
Main Air Jet	100
Air Cut Valve Air Jet	120
Jet Needle	N36M
Pilot Jet	35 [32]
Pilot Air Jet	80
Pilot Screw	2 turns out, (U) ——
Starter Jet	50
Fuel Level	–0.5 (above 1.5 – below 0.5 mm from bottom edge of the carburetor body)
Float Height	17.0 mm

(Cal): Californian model
(U) : US model
[ ] : High Altitude (US model)

Carburetors

High Altitude Performance Adjustment (US model)

○To improve the EMISSION CONTROL PERFORMANCE of vehicles operated above **4,000** feet, Kawasaki recommends the following Environmental Protection Agency (EPA) approved modification.
●Change the main jet and pilot jet for high altitude use.

High Altitude Carburetor Specifications

Main Jet:	**#128 (Cal), #132**
Pilot Jet:	**#32**

Carburetor Inspection

●Inspection procedure is the same as for the ZL900-A2, except for the following.
○Check the O-ring and diaphragm of coasting enricher system.
☆If any of the O-rings or diaphragms are not in good condition, replace them.

Coasting Enricher System

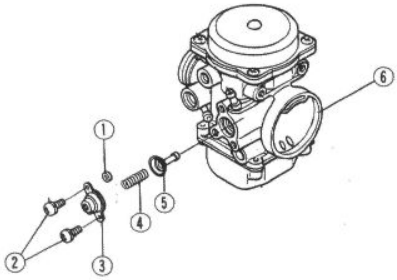

1. O-ring
2. Mounting Screw
3. Cover
4. Spring
5. Diaphragm
6. Carburetor (LH)

Fuel Tank

Fuel Tank Removal

●Removal procedure is the same as for the ZL900-A2, except for the following.

○Remove the bolts from the rear end of the fuel tank.

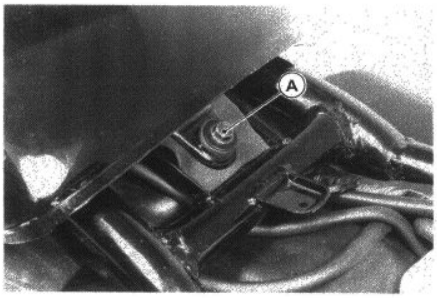

A. Bolts

Evaporative Emission Control System (US California Vehicle only)

Parts Removal/Installation Notes

●Removal/Installation procedures are the same as for the ZL900-A2. Refer to Cable Routing in this chapter for installation.

Cooling System

Coolant

Coolant Level Inspection

●Position of the coolant level gauge is changed from ZL900-A2.

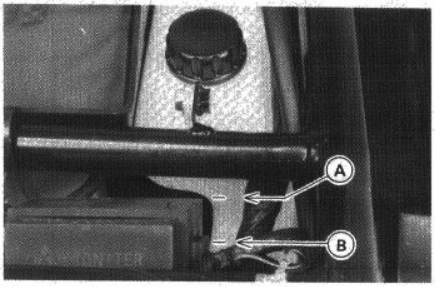

A. Full Mark B. Low Mark

Coolant Draining

●Draining procedure is the same as for the ZL900-A2, except for the following.

○Remove the left-hand side cover.

○Remove the battery, and battery case.

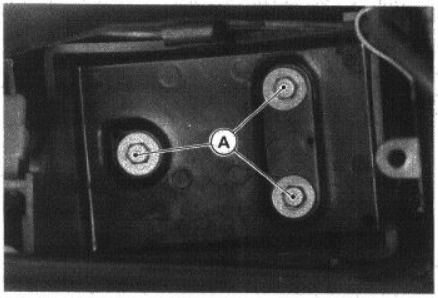

A. Battery Case Mounting Bolts

○Unscrew the mounting bolts, and remove the reservoir tank with hoses attached.

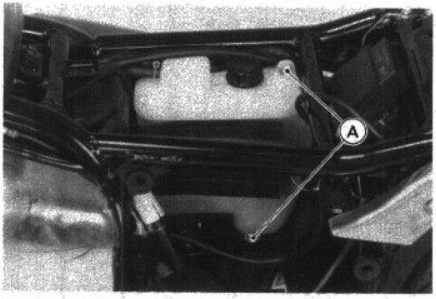

A. Mounting Bolts

Radiator, Radiator Fan

Radiator Hose, Pipe, Reservoir Tank Hose Installation

- Installation procedure is the same as for the ZX900-A1. Refer to Cable Routing in this chapter for installation.

Engine Top End

Specifications

Item	Standard	Service Limit
Cylinder Compression:	(Usable range) 885 – 1,350 kPa @300 r/min (rpm) (9.0 – 13.8 kg/cm², 128 – 196 psi)	– – –
Cylinder Block, Piston:		
Cylinder inside diameter	73.994 – 74.006 mm	74.11 mm
Piston diameter	73.935 – 73.964 mm	73.79 mm

Clean Air System (US model)

Vacuum Switch Valve Installation Note

- Install the switch valve hoses as shown.

Switch Valve Hose Installation

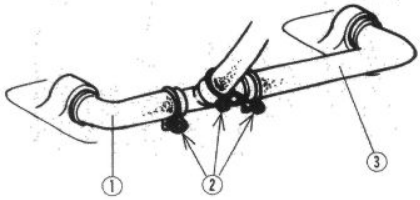

1. Short Hose
2. Eyelets face to downward.
3. Long Hose

Clutch

Clutch Pipe

Clutch Pipe Installation Note

- Route the clutch pipe as shown.
- Apply brake oil to the threads of the clutch pipe joint.
- Tighten the banjo bolts and the pipe joint to the specified torque (see Torque and Locking Agent in this chapter).

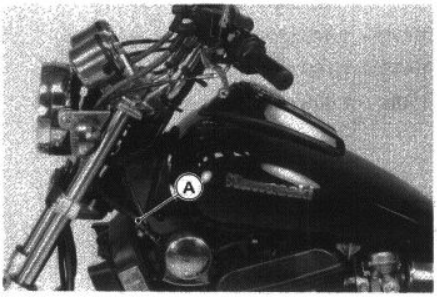

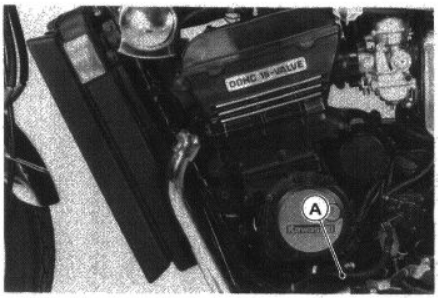

A. Clutch Pipe

Engine Lubrication System

Oil Pan

Oil Pan Removal/Installation Note

- Installation procedure is the same as for the ZL900-A2, except for the following.
- ○Apply a thin coat of liquid gasket to mating surface of the oil pan and the lower crankcase half as shown.

Oil Pan Installation

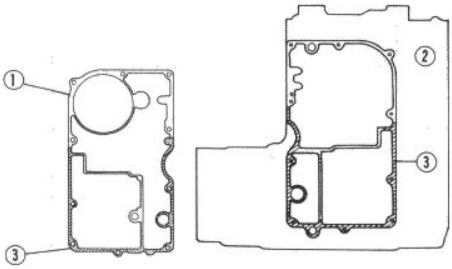

1. Oil Pan
2. Lower Crankcase Half
3. Apply here.

Crankshaft/Transmission

Specifications

Item	Standard	Service Limit
Crankshaft, Connecting Rods:		
Connecting rod big end bearing insert/crankpin clearance	0.046 – 0.067 mm	0.11 mm
Connecting rod big end bearing insert thickness:		
Brown	1.470 – 1.475 mm	– – –
Black	1.475 – 1.480 mm	– – –
Blue	1.480 – 1.485 mm	– – –

Connecting rod big end bearng insert selection:

Con-rod Big End Bore Diameter Marking	Crankpin Diameter Marking	Bearing Insert	
		Size Color	Part Number
○	○	Black	92028-1408
None	None		
○	None	Blue	92028-1407
None	○	Brown	92028-1409

Crankshaft/Connecting Rods

Crankshaft, Connecting Rod Removal/Installation:

Connecting Rod Installation Notes

- To minimize vibration, a pair of connecting rod (left two rods or right two) should have the same weight mark. The left two rods are a pair and the right two rods are a pair. The weight mark is indicated by a capital letter, and is stamped on the connecting rod big end.

Weight Mark Location

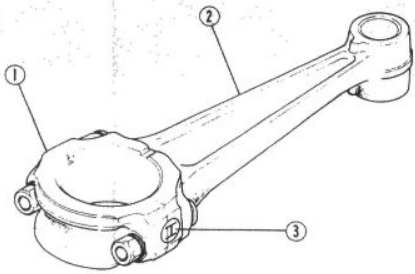

1. Big end cap
2. Connecting rod
3. Weight mark, alphabet

- If the connecting rods or bearing inserts are replaced with new ones check clearance with plastigage before assembling engine to be sure the correct bearing inserts are installed.
- Apply molybdenum disulfide grease to the upper inner surface of the connecting rod big end.

CAUTION

○**Do not apply grease to the inner surface of the upper or lower bearing inserts or to the outer surface of the lower bearing insert.**

Connecting Rod and Bearing Insert

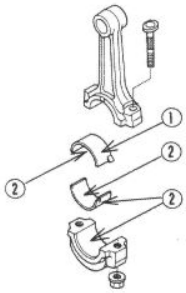

1. Apply grease.
2. Do not apply grease.

- The connecting rod bolts are designed to stretch when tightened. Never reuse them. Replace the connecting rod big end bolts with new ones.

○The new conneting bolt and nut are treated with an anti-rust solution, be sure to clean the bolt and nut thoroughly with high flash point solvent.

WARNING

○**Clean the bolts and nuts in a well-ventilated area, and take care that there is no spark or flame anywhere near the working area, this includes any appliance with a pilot light. Because of the danger of highly flammable liquides, do not use gasoline or low flash-point solvents to clean the bolts and nuts.**

CAUTION

○**Immediately dry the bolts and nuts with compressed air after cleaning.**

○**Clean and dry the bolts and nuts completely.**

- Apply a small amount of engine oil to the threads and seating surface of the connecting rod bolts and nuts.
- Tighten the nuts to the specified torque, according to whether they are new or used.

Tightening Torque for the Connecting Rod Big End Nuts

When reusing an old nut
26 N-m (2.7 kg-m, 19.5 ft-lb)

When installing a new nut
29 N-m (3.0 kg-m, 22 ft-lb)

- Tighten the nuts **120°** more.

○Mark the connecting rod big end caps and nuts so that nuts can be turned 120° properly.

○Tighten the hexagonal nut by 2 corners.

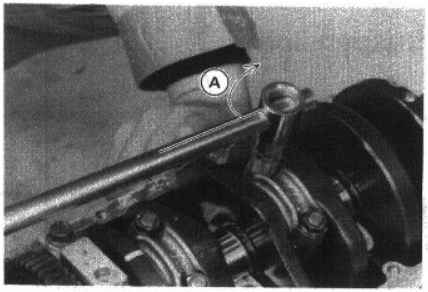

A. 120°

Connecting Bolt Tightening

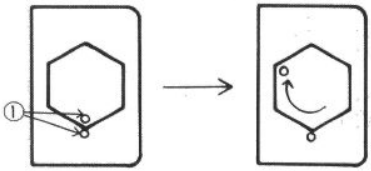

1. Marks

CAUTION

○**Be careful not to overtighten the nuts.**

- Check the protruding length of the connecting rod bolt.

★If the length is more than 0.8 mm, the bolt has stretched too much. Replace the bolt and nut with new ones. An over elongated bolt may break in use.

Connecting Rod Big End

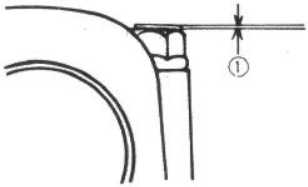

1. Protruding Length

Suspension

Specifications

Item	Standard	Service Limit
Front Fork:		
Oil capacity	262 ±2.5 mL (approx. 223 mL at oil change)	– – –
Oil level	200 mm (Fully Compressed, without Main Spring)	– – –
Fork spring free length	541.2 mm	530 mm

Controls

Handlebar

Handlebar Installation Note

- ●Installation procedure is the same as for the ZL900-A2, except for the following.
- ○Apply a thin coat of molybdenum disulfide grease to the threads of the handlebar clamp bolts.

Electrical System

Specifications

Starter System

Starter motor:
- Carbon brush length:
  - Standard 12.0 – 12.5 mm
  - Service Limit 6 mm
- Commutator diameter:
  - Standard 28 mm
  - Service Limit 27 mm

Switch and Sensors

Fuel level sensor resistance:
- Full position 4 – 10 Ω
- Empty position 90 – 100 Ω

Alternator

•Charging system is almost the same as for the ZL900-A2. Refer to the following diagram.

Charging System Circuit

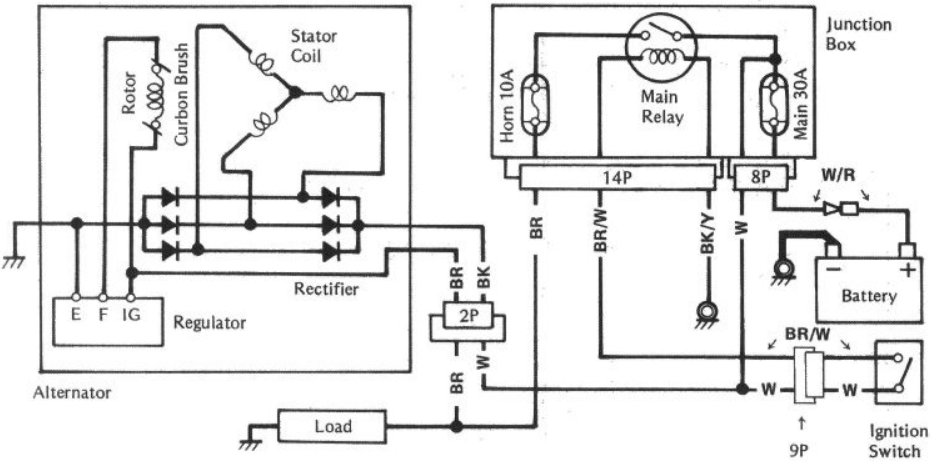

Ignition System

•Ignition system is almost the same as for the ZL900-A2. Refer to the following diagram.

Ignition System Wiring Diagram

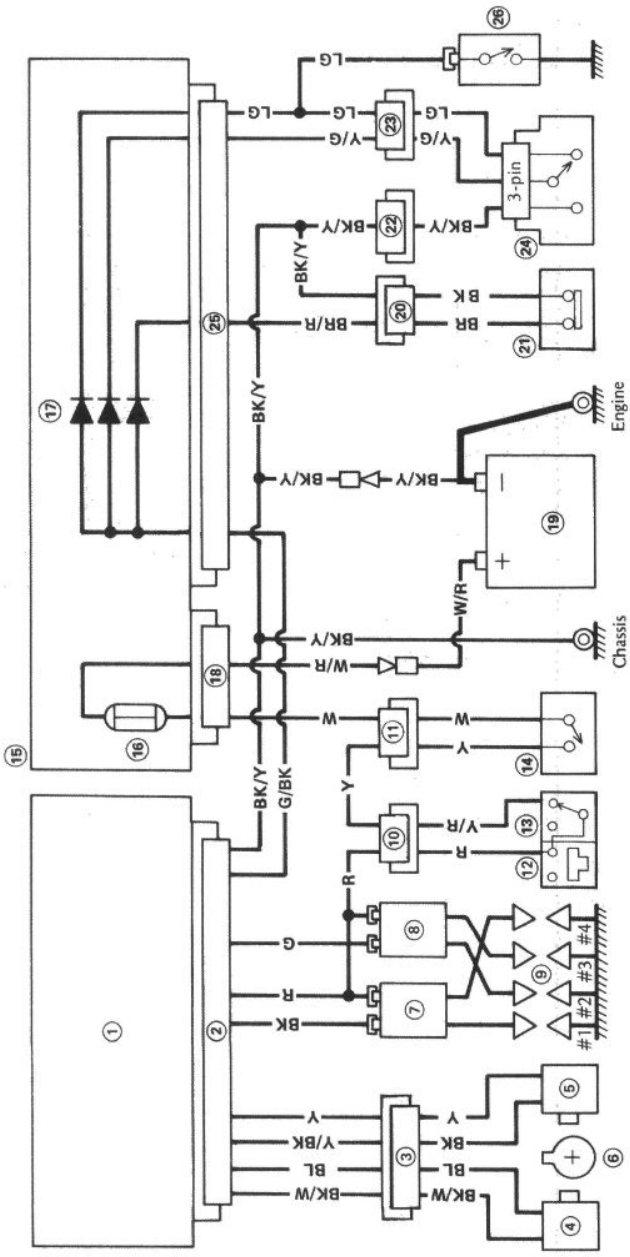

1. IC Igniter
2. IC Igniter 10-pin Connector
3. Pickup Coil 4-pin Connector
4. Pickup Coil for #2 and #3 Cylinder
5. Pickup Coil for #1 and #4 Cylinder
6. Timing Rotor
7. Ignition Coil for #1 and #4 Cylinders
8. Ignition Coil for #2 and #3 Cylinders
9. Spark Plugs
10. Engine Stop Switch 4-pin Connector (US Model : 6-pin Connector)
11. Ignition Switch 9-pin Connector
12. Starter Button
13. Engine Stop Switch
14. Ignition Switch
15. Junction Box
16. 30 A Fuse
17. Diodes
18. Junction Box 8-pin Connector
19. Battery
20. Side Stand Switch 3-pin Connector
21. Side Stand Switch
22. LH Switch 9-pin Connector
23. Starter Lockout Switch 2-pin Connector
24. Starter Lockout Switch
25. Junction Box 14-pin Connector
26. Neutral Switch

Electric Starter System

Parts Removal:

Starter Motor Disassembly/Assembly

- Remove both end covers, and take the armature out the pinion gear end.
- Remove the brush plate from the leads.

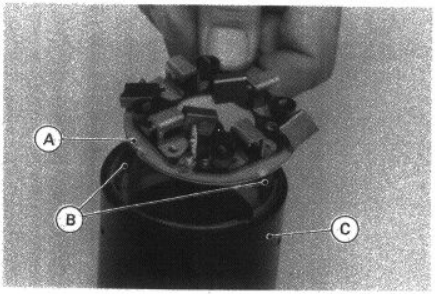

A. Brush Plate
B. Brush Lead
C. Yoke

- Remove the brush springs from the brush plate. This makes armature installation easy.

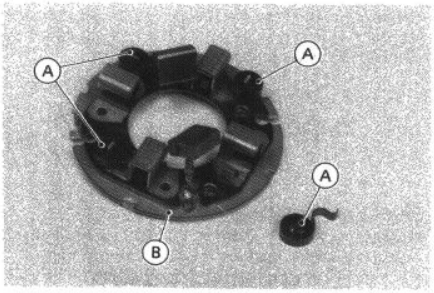

A. Springs
B. Brush Plate

- Remove the nut and remove the terminal bolt, and then remove the brush with the plastic holder.

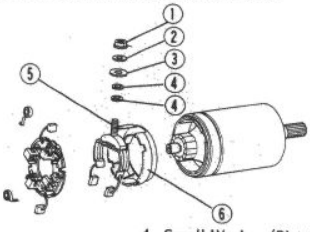

1. Nut
2. Washer
3. Large Washer (Plastic)
4. Small Washer (Plastic)
5. Terminal Bolt
6. Plastic Holder

- Install the terminal bolt as shown.

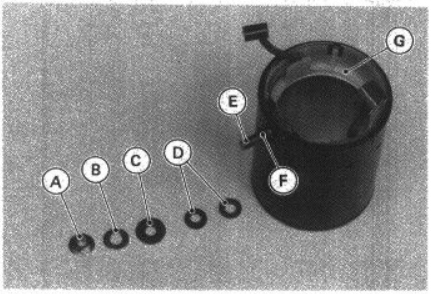

A. Nut
B. Washer
C. Large Washer (Plastic)
D. Small Washer (Plastic)
E. Terminal Bolt
F. O-ring
G. Plastic Holder

- Install the brush plate and armature as follows.
  - Install the brush plate on the yoke fitting the brush leads into the notches in the plate. Fit the brush plate tongue into the yoke notch.

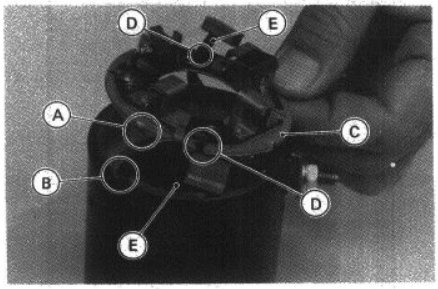

A. Tongue
B. Notch
C. Brush Plate
D. Notches
E. Blush Leads

  - Keeping the motor upright, install the brush springs. Fit the spring on to the spring post halfway; the post must be positioned in the D-shaped end of the spring. Turn the other end of the spring a half turn clockwise, and fit the end into the brush groove. Push the spring all the way onto the post until it stops at the stepped portion.

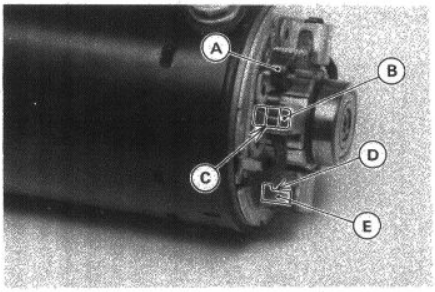

A. Spring
B. Brush
C. Brush Groove
D. Stepped Portion
E. Spring Post

•To install the end cover on the motor, fit the long tongue on the brush plate into the end cover groove.

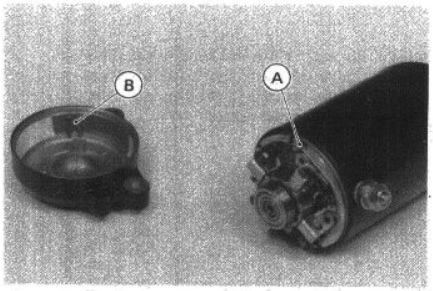

A. Tongue
B. Groove

•When the gear cover, internal gear, yoke, brush plate, and end cover are correctly assembled, the marks on the covers and yokes align with each other.

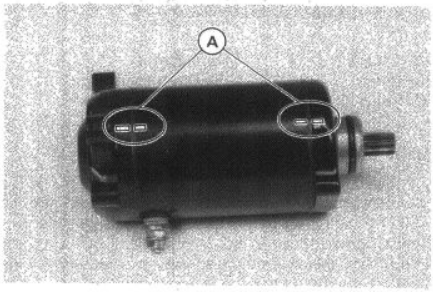

A. Marks

Inspection:

Brush Plate Inspection

•Using the x 1 Ω ohmmeter range, measure the resistance between the brush and the plate.

★If there is not close to zero ohms, the brush plate has an open and it must be replaced.

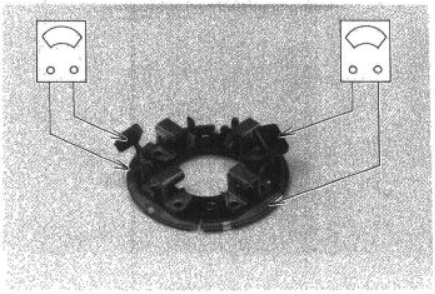

•Using the highest ohmmeter range, measure the resistance between the metal plate and the brush holders.

★If there is any reading at all, the brush holder has a short and the brush plate must be replaced.

Brush and Lead Assembly Inspection

•Using the x 1 Ω ohmmeter range, measure the resistance between the brush and the terminal bolt.

★If there is a high resistance or no reading (∞), a lead is open and the brush and lead assembly must be replaced.

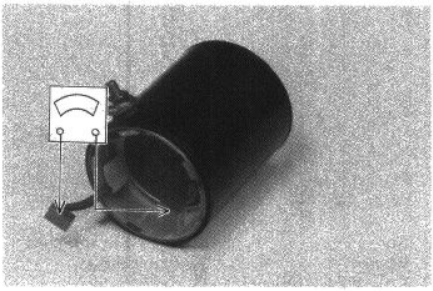

Electric Starter Circuit

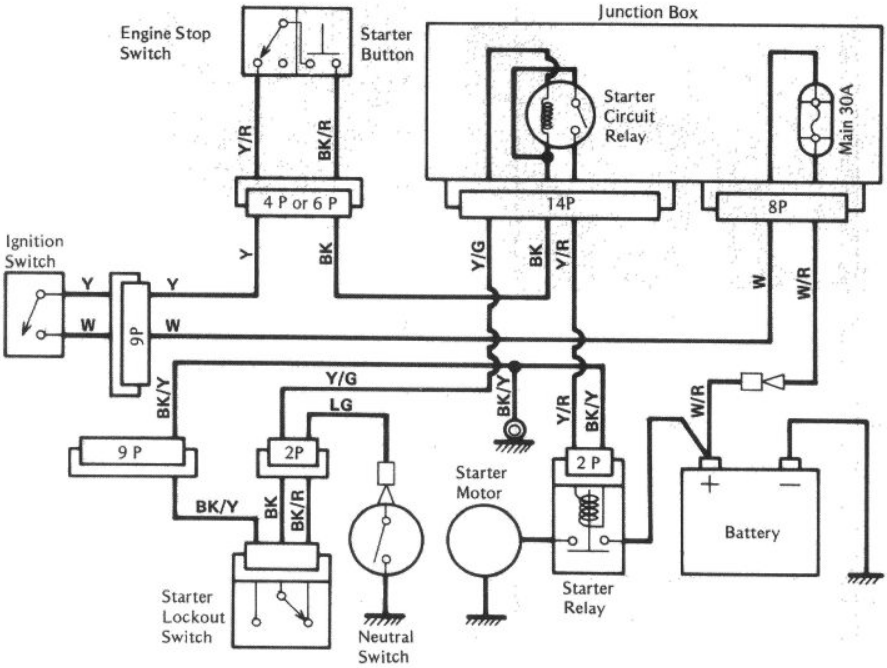

Lighting System

Adjustment:

Headlight Horizontal Adjustment

- Turn the small screw on the headlight rim in or out until the beam points straight ahead. Turning the adjusting screw clockwise moves the headlight beam to the left.

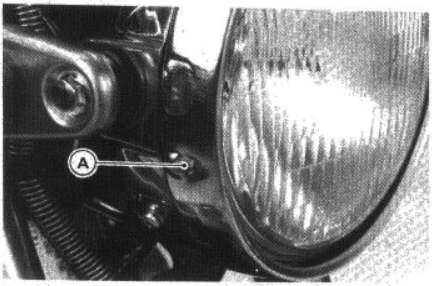

A. Adjusting Screw

Headlight Vertical Adjustment
- Loosen the headlight bolt shown.

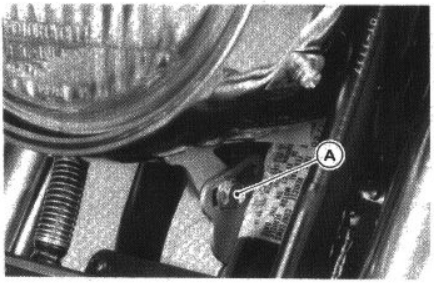

A. Headlight Bolt

- Push the headlight up or down to adjust the headlight vertically.
- Tighten the headlight bolt.

NOTE

○*On high beam, the brightest point should be slightly below horizontal. Adjust the headlight to the proper angle according to local regulations. Adjust with normal operational weight loaded on the motorcycle.*

Vertical Adjustment

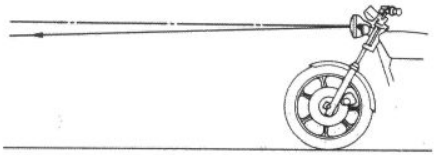

Parts Removal:

License Plate Light Bulb Replacement Notes
- Refer to the Tail/Brake Light Bulb Replacement Notes section. Note the following
- Install the lens so that transparent side faces down.

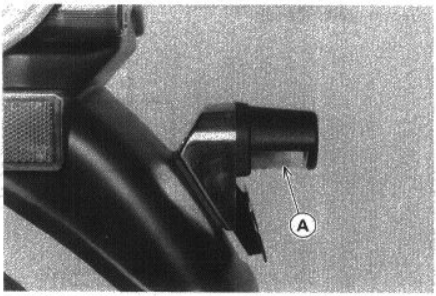

A. Transparent Side

- Be careful not to overtighten the lens mounting screws.

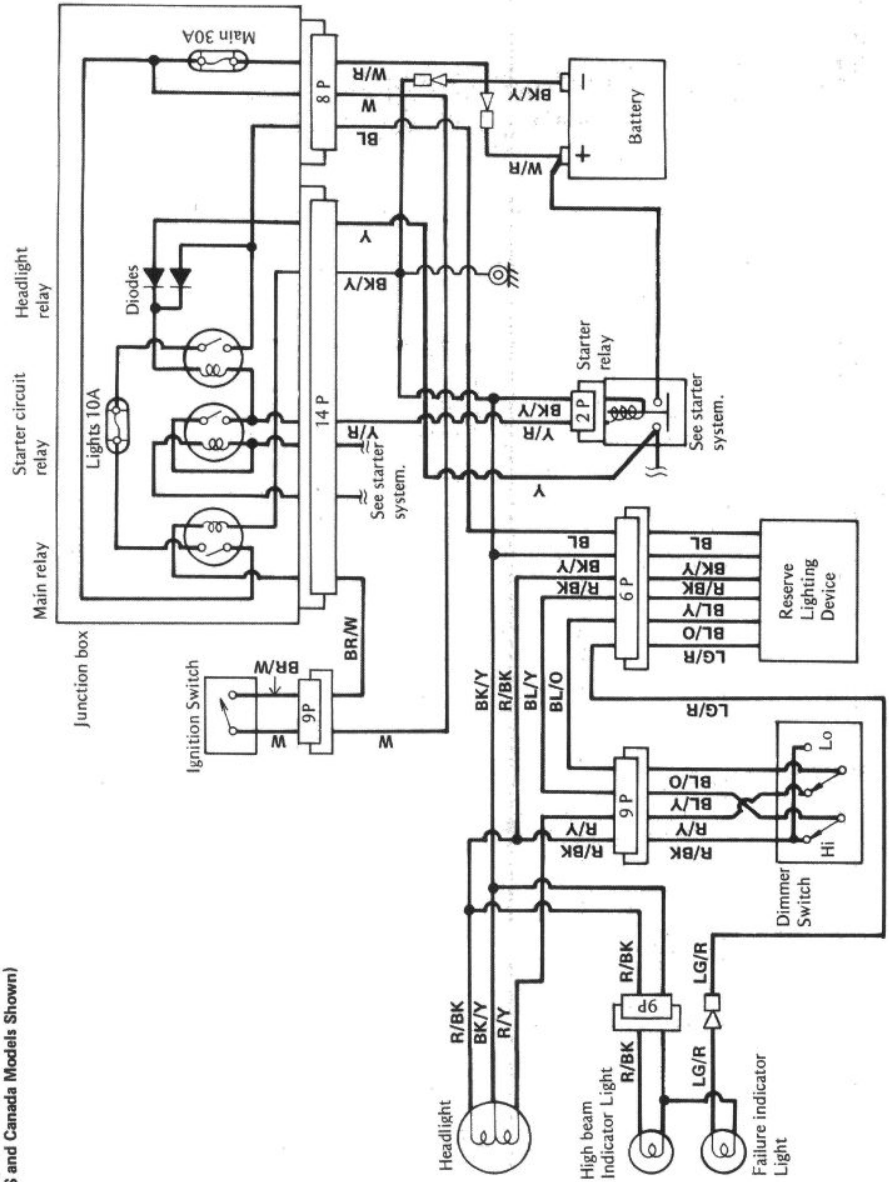

Headlight Circuit (US and Canada Models Shown)

Cooling Fan System

•Cooling fan system is almost the same as for the ZL900-A2. Refer to the following diagram.

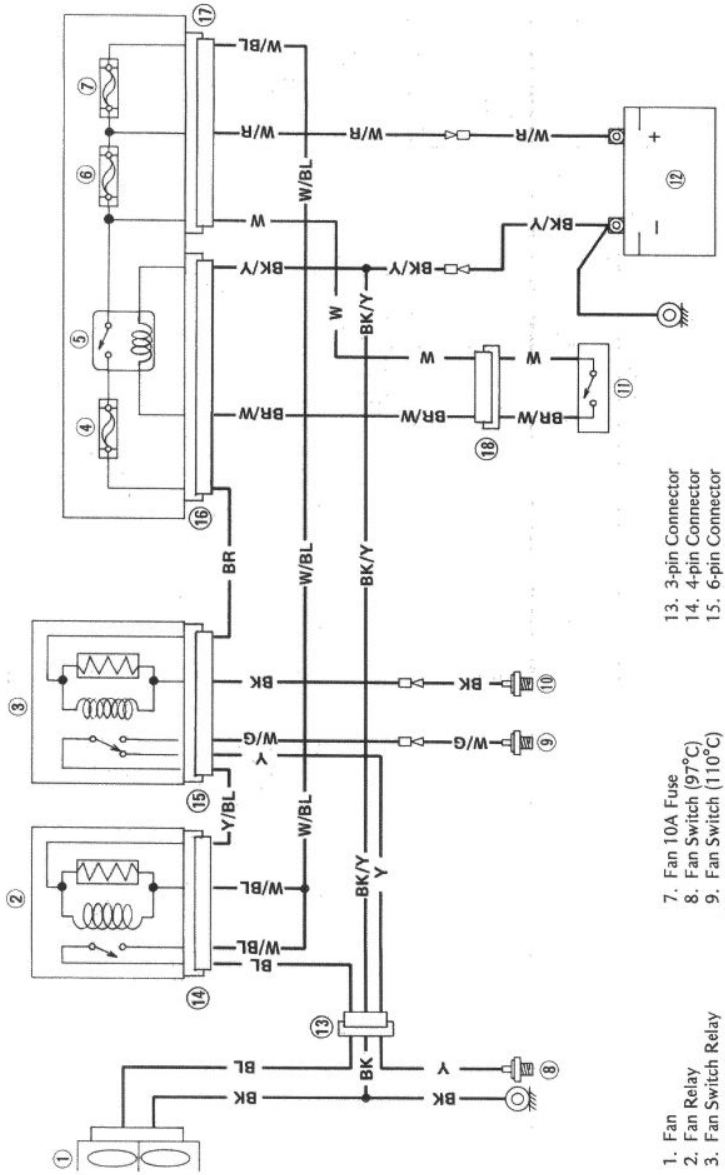

Cooling Fan System Wiring

Meters and Indicators

Parts Removal:

Meter and Indicator Removal/Installation Note

●Removal/installation procedures are the same as for the ZL900-A2.

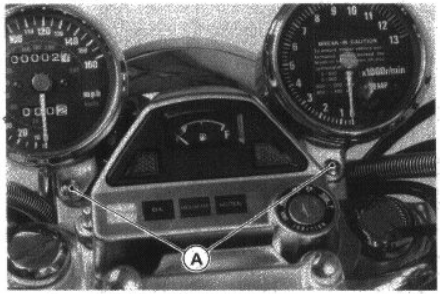

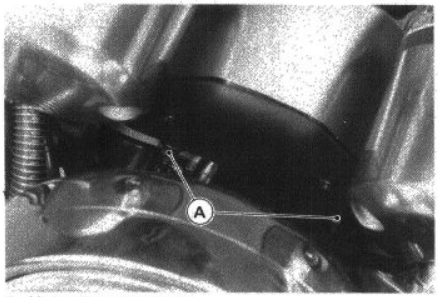

A. Meter Mounting Bolts

Bulb Replacement Note

●Replacement procedure is almost the same as for the ZL900-A2. Refer to the following photograph.

Inspection:

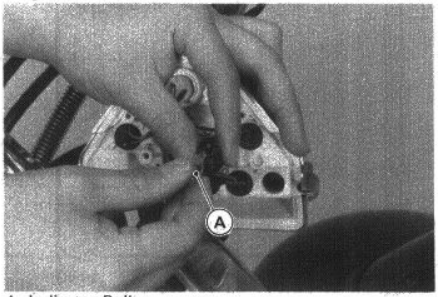

A. Indicator Bulb

Water Temperature Gauge Operation Inspection

●Prepare an auxiliary wire, and check the operation of the gauge.

Gauge Operation Test

Ignition Switch Position: ON

Wire Location: Male, Sensor Connector (disconnected)

Results: Gauge should read C when connector wire is opened.
Gauge should read H when connector wire is grounded to engine.

CAUTION

○**Do not ground the wiring longer than necessary. After the needle swings to the H position, stop the test. Otherwise the gauge could be damaged.**

★If the gauge readings are correct, the water temperature sensor is bad. If these readings are not obtained, the trouble is with the gauge and/or wiring.

●Check the water temperature gauge circuit wiring (see Wiring Inspection).

★If all wiring and components other than the water temperature gauge unit check out good, the unit is defective.

Tachometer Circuit

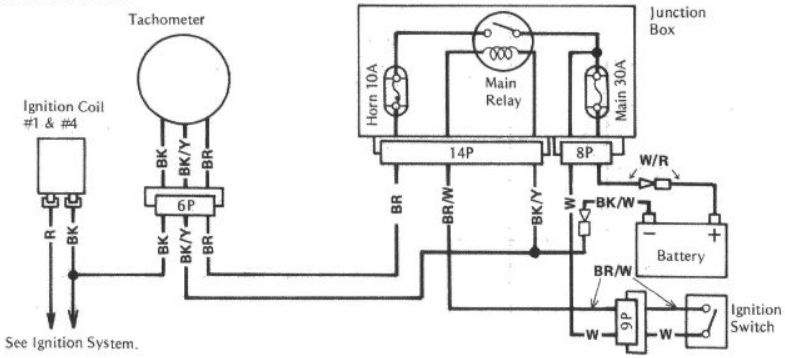

Water Temperature Warning System

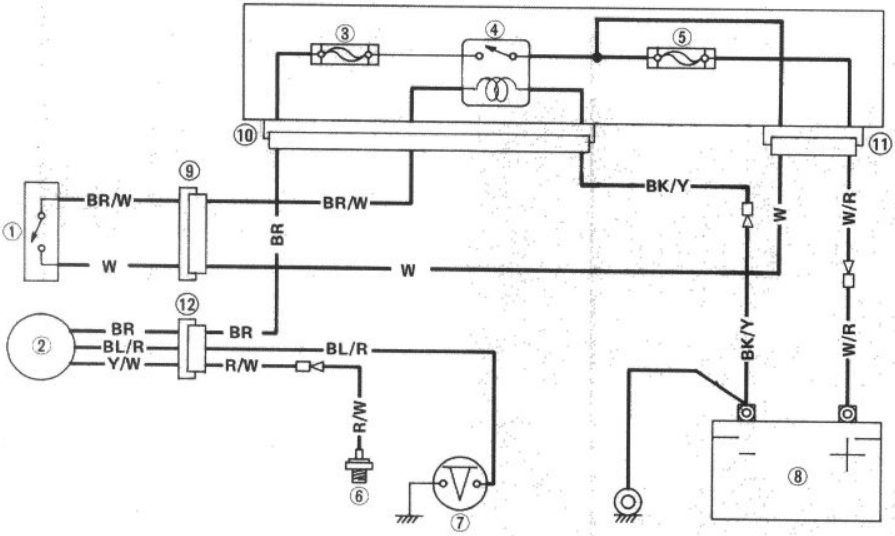

1. Ignition Switch
2. Warning Indicator
3. Horn 10A Fuse
4. Main Relay
5. Main 30A Fuse
6. Water Temperature Switch
7. Oil Pressure Switch
8. Battery
9. 9-pin Connector
10. 14-pin Connector
11. 8-pin Connector
12. 6-pin Connector

Fuel Gauge Circuit

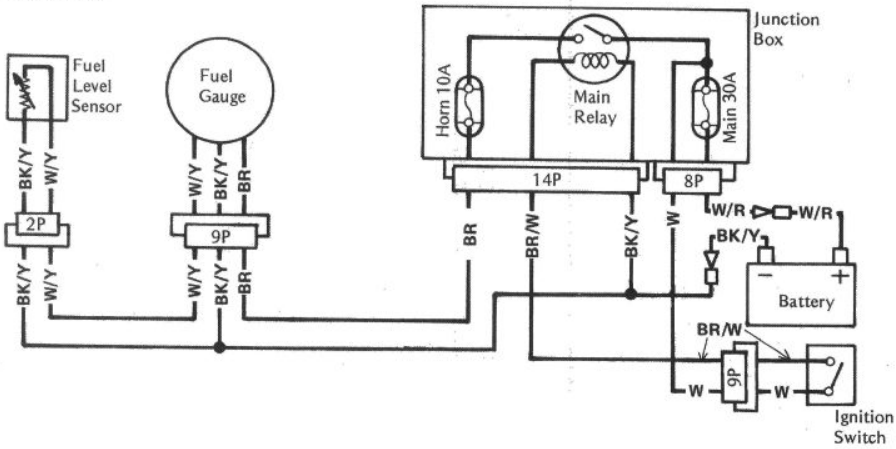

Switch and Sensors

Inspection:

Switch Inspection

- Inspection procedure is the same as for the ZL900-A2. Refer to the following data.

Starter Button Connections

	BK/R	R
Free		
Push on	○	○

Starter Lockout Switch Connections

	BK/Y	BK	BK/R
When clutch lever is pulled in	○	○	
When clutch lever is released		○	○

Dimmer Switch Connections (US, Canada)

	BL/Y	BL/O	R/BL	R/BK
HI	○	○	○	○
LO	○	○	○	○

Starter Button Connections

	R	BK/R
Free		
Push on	○	○

Front Brake Light Switch Connections

	BK	BK
When brake lever is pulled in	○	○

Side Stand Switch Connections

	BR	BK
When side stand is up	○	○
When side stand is down		

Fuel Level Sensor Inspection

- Remove the fuel level sensor.
- Check that the float moves up and down smoothly without binding. It should go down under its own weight.

★If the float does not move smoothly, replace the sensor.

Fuel Level Sensor

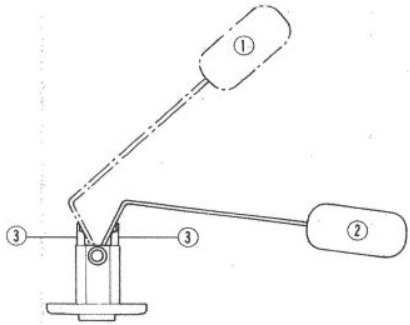

1. Float in full position
2. Float in empty position
3. Float arm stop

- Measure the resistance of the fuel level sensor with an ohmmeter.

★If the ohmmeter does not show the specified values, or the readings do not change smoothly as the float moves up and down, replace the sensor.

Fuel Level Sensor Resistance

Full Position:	**4 – 10 Ω**
Empty Position:	**90 – 100 Ω**

- Inspect the leads and 2-pin connector.

★If they show any signs of damage, replace the sensor.

Junction Box

The junction box has fuses, relays and diodes. The relays and diodes can not be removed.

Junction Box Internal Circuit

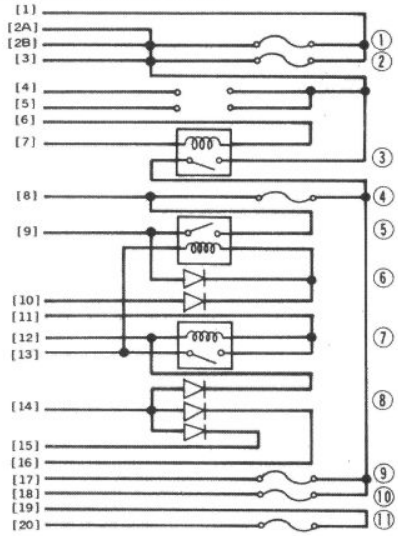

1. Fan 10 A Fuse
2. Main 30 A Fuse
3. Main Relay
4. Headlight 10 A Fuse
5. Headlight Relay*
6. Diodes
7. Starter Relay
8. Diodes for Safety Device
9. Taillight 10 A Fuse
10. Horn 10 A Fuse
11. Turn Signal 10 A Fuse

* : for US/Canadian models

Fuse Removal

- Remove the side cover.
- Pull the fuse cover off from the junction box.

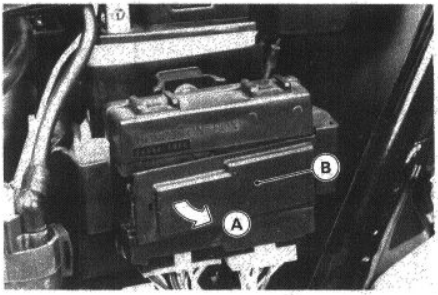

A. Pull B. Cover

- Pull the fuses straight off from the junction box with the fuse puller which is installed in the junction box.

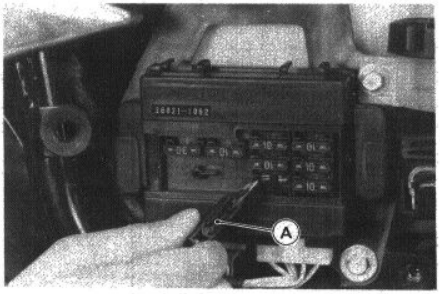

A. Fuse Puller

Fuse Installation Note

○Install the fuses on the original positions shown.

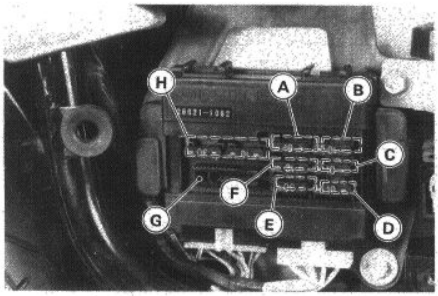

A. 10 A for Taillight
B. 10 A for Horn
C. 10 A for Headlight
D. 10 A for Turn Signal Light
E. 30 A Main Fuse
F. 10 A for Accessory
G. Fuse Puller
H. Spare Fuse

Fuse Inspection

- Remove the fuse from the junction box.
- Inspect the fuse element.
- ★If it is blown out, replace the fuse. Before replacing a blown fuse, always check the amperage in the affected circuit. If the amperage is equal to or greater than the fuse rating, check the wiring and related components for a short circuit.

CAUTION

○**When replacing a fuse, be sure the new fuse matches the specified fuse rating for that circuit. Installation of a fuse with a higher rating may cause damage to wiring and components.**

Fuse

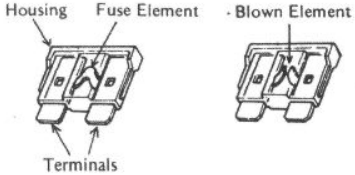

Junction Box Fuse Circuit Inspection

- Remove the junction box from the motorcycle.
- Pull off the connectors from the junction box.
- Make sure all connector terminals are clean and tight, and none of them have been bent.
- ★Clean the dirty terminals and, straighten slightly-bent terminals.
- Check conductivity of the numbered terminals with hand tester.
- ★If the meter does not read as specified, replace the junction box.

Fuse Circuit Inspection

Meter Connection	Meter Reading (Ω)
1 – 3	0
1 – 2B	0
3 – 8*	0
3 – 17*	0
3 – 18*	0
19 – 20	0

* : When 12 V direct current is applyed between No.6 and No. 7 terminal.

Fan, Starter Circuit and Headlight Relay Inspection

- Remove the junction box from the motorcycle.
- Check conductivity of the following numbered terminals by connecting an ohmmeter and one 12 V battery to the junction box as shown.
- ★If the meter does not read as specified, replace the junction box.

Relay Circuit Inspection (with the battery disconnected)

Meter Connection	Meter Reading (Ω)
3 – 8	∞
8 – 9*1	∞
11 – 13	∞
6 – 7	about 320
10 – 13*1	*2
11 – 12	about 320
3 – 7	∞
8 – 13*1	∞
12 – 13	∞

Relay Circuit Inspection (with the battery connected)

Meter Connection	Battery Connection + – –	Meter Reading (Ω)
3 – 8	6 – 7	0
8 – 9*1	10 – 13	0
11 – 13	11 – 12	0

*1: US, Canadian Models only

*2: The resistance should be low in one direction and more than ten times as much in the other direction.

Diode Circuit Inspection

- Remove the junction box from the motorcycle.
- Pull off the connectors from the junction box.
- Check conductivity of the following pair of terminals.

Terminals for Diode Circuit Inspection

9-13*, 10-13*, 14-12, 14-15, 14-16

*** US, Canadian Models Only**

★The resistance should be low in one direction and more than ten times as much in the other direction. If any diode shows low or high in both directions, the diode is defective and the junction box must be replaced.

NOTE

○*The actual meter reading varies with the meter used and the individual diode, but, generally speaking, the lower reading should be from zero to the first ½ of the scale.*

Electrical Wiring

Wiring Inspection

- Visually inspect the wiring for signs of burning, fraying, etc.

★If any wiring is poor, apart and inspect it for corrosion, dirt, and damage.
●Pull each connector apart and inspect it for corrosion, dirt, and damage.
★If the connector is corroded or dirty, clean it carefully. If it is damaged, replace it.
●Check the wiring for continuity.
○Use the wiring diagram to find the ends of the lead which is suspected of being a problem.
○Connect an ohmmeter between the ends of the leads.
○Set the meter to the x 1 Ω range, and read the meter.
★If the meter does not read 0 Ω, the lead is defective. Replace the lead or the wiring loom if necessary.

Wiring Installation Note

●Route the cable and harnesses correctly. The cables and wiring harnesses must not hinder handlebar movement (see Cable Routing in this chapter).

ZL1000-A1 Wiring Dagram

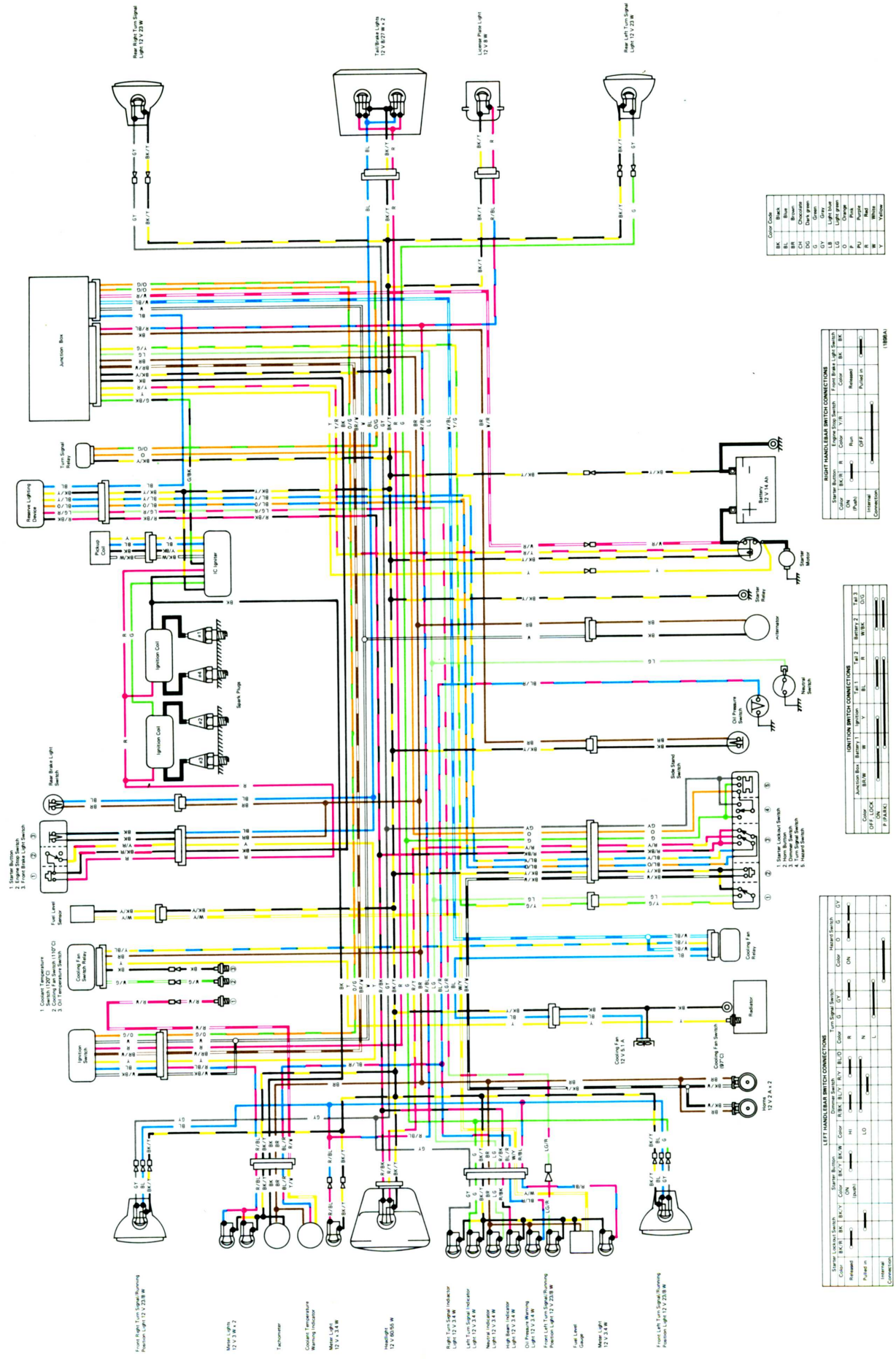

MODEL APPLICATION

Year	Model	Beginning Frame No.
1985	ZL900-A1	JKAZL2A1□FA000001, or JKAZL2A1□FB500001
1986	ZL900-A2	JKAZL2A1□GA002301, or JKAZL2A1□GB504701
1987	ZL1000-A1	JKAZLCA1□HA000001 or JKAZLCA1□HB500001

□: This digit in the frame number changes from one machine to another.

KAWASAKI
HEAVY INDUSTRIES, LTD.
MOTORCYCLE GROUP

Part No. 99924-1077-51

Printed in Japan