HONDA

PARTS CATALOG

VT750C'83

Shadow 750

AMERICAN HONDA MOTOR CO., INC.

April, 1993
Second Edition
14ME90M

© AMERICAN HONDA MOTOR CO., INC. 1993

PRINTED IN USA

Table of Contents

	Grid	Page
How To Use This Catalog	A 2	II
Serial Numbers	A 3	IV
Construction Of Vehicle Identification Number (V.I.N.)	A 3	V
Color Tables	A 4	VI
Manuals	A 5	VIII
Model ID Photos	A 6	X
Specifications	A 6	XI
Bulk Hose	A 8	XIV
Commonly Required Replacement Parts	A 9	XVI
Contents By Page No. Sequence	A 10	XVIII
Contents In Alphabetical Order	A 10	1
Part Groups		
Engine Group	B 1	2
Frame Group	D 1	46
Index		
Part Number Index	G 1	112
Description Index	H 1	124

 © American Honda Motor Co., Inc. 1993

How To Use This Catalog

This parts catalog is to be used when ordering replacement parts for the model (s) specified on the microfiche strip.

CATALOG PAGE BREAKDOWN

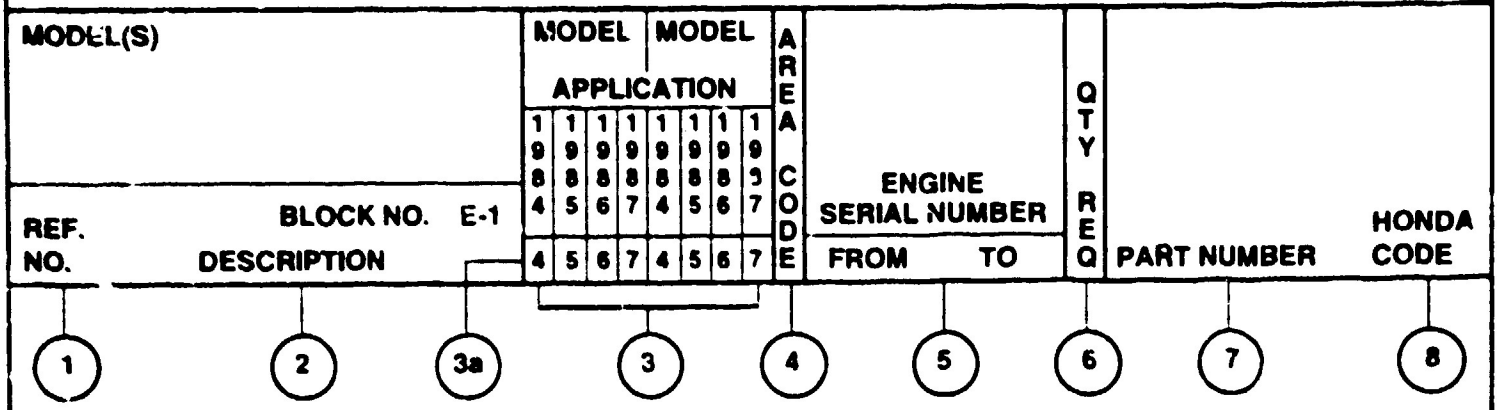

1. **REF NO.** — Reference number corresponding with the reference numbers on the illustrations. *
   * All illustrations are representative only and do not nescessarily correspond exactly to the actual part. "NI" signifies the part is not illustrated.

2. **DESCRIPTION** — Describes the part for the related part number.
   Abbreviations:

ASSY.	- Assembly	L (100L)	- Link (100 Links)
COMP.	- Complete	A.C.	- Alternating Current
R.	- Right		
L	- Left	D.C.	- Direct Current
STD.	- Standard	IN	- Inlet
MM	- Millimeter	EX.	- Exhaust
G	- Gram	FR	- Front
T (22T)	- Tooth (22 Teeth)	RR	- Rear
		HEX.	- Hexagonal
A	- Ampere	A.M.	- Attaching Mark
V	- Volt	T.M.	- Transcript Mark
W	- Watt	C.D.I.	- Capacitive Discharge Ignition
KPH	- Kilometer Per Hour	WL	- With Labeling
MPH	- Miles Per Hour	WOL	- Without Labeling

   Decision for 'R' or 'L'.
   'R' or 'L' in the description of a part stands for the Right hand side or the Left hand side which is decided by the forward direction of travel of the vehicle.

3. **MODEL APPLICATION** — Model application for the various models listed within the catalog. Single model applications will not require this section.

3a. **MODEL YEAR GUIDE** — A guide to the part application. (prior to 1976 the guide reference is the model designation i.e., K0, K1, etc... For 1976 and above the guide reference is the last digit of the model year i.e., 1976=6; 1977=7; 1985=5 etc...)

4. **AREA CODE** — Area codes for parts that are unique to a particular area. Area codes are defined in the Serial Number application chart when applicable. This column will not be used in catalogs which do not include unique area codes.

5. **SERIAL NUMBER** — Applies to Engine or Frame serial numbers depending on the section.
   The serial number of the vehicle (frame, engine, carburetor) should be checked prior to ordering parts for a specific unit.
   In cases where a part has been modified, the serial number of the vehicle bearing the modification is listed in the 'SERIAL NUMBER' column.
   The modification parts are controlled by each pertinent serial number below:
   Engine serial number — Engine group parts (Block numbers beginning with 'E')
   Carburetor identification number — Carburetor component parts
   Frame serial numbers — Frame group parts (Block numbers beginning with 'F'). Serial number application chart and Serial number locations are provided.

   Note: Some models may be controlled by one serial number only.

II © American Honda Motor Co., Inc. 1993 14ME90M

How To Use This Catalog

6. **QTY REQ** — Quantity required per unit as specified.
   A. "N" in place of the quantity indicates AS REQUIRED.
   B. "( )" or "(" by the quantity required indicates "optional".

7. **PART NUMBER** — Part number corresponding to the reference numbers and application. Several part numbers may be listed under one (1) reference number. For your convenience the current supersede chain, as of print date, has been listed for you. Supersede chains are subject to change without notice.

MAKE-UP OF PART NUMBERS

All parts are classified into two groups consisting of "GENERAL PARTS and "STANDARD PARTS". All parts are numbered in accordance with system described below:

General Parts

Example: Fork comp. Part No.	51105-GR1-700ZA
Function No.	51
Component No.	105
Parts Classification No.	-GR1-
Classification No.	700
*Color Code	ZA

Standard Parts

Example: 8 x 8 Hex.. Bolt Part No.	92000-08018-1A
Function No	92
Type No.	000
Dimensions	-08018-
ISO Standard Designation	1
Chemical Surface Treatment	A

* The color code at the end of a General Part's part number indicate the color. However, color codes such as ZA, ZB, ZC onward except ZZ, do not indicate the color directly but refer to the notes "" "" in the Description Column of this Parts Catalog Microfiche. If the color description is not indicated in the text, refer to the color table.

8. **HONDA CODE** — The Honda Code is listed to the right of each Part Number.

A. **ADDITIONAL INFORMATION** — The table of contents located at the right of each microfiche grid lists sectioned titles in alphabetical order. Some microfiche will require separate tables of contents for the Engine and Frame sections which will be noted in a sub-heading; the introducion section (Row "A") of these microfiche will have the contents of the Engine Section on even number grids and the contents of the Frame Section on odd number grids.

NOTE:

1. The Block No. listed in the upper right hand corner of the Description heading refers to a complete illustration page and it's text, and should not be confused with the GRID NO. when using microfiche.
2. Rear view mirrors are standard equipment on all street legal models.

Serial Numbers

Models and applicable serial numbers
Models and applicable serial Nos. given in this parts catalog can be identified as follows.

Model	Area Code	Applicable Engine Serial No.	Applicable Frame Serial No.	Applicable Carburetor Identification No.
VT750C '83	A	RC14E-2000051 To 2022747	RC140-DM000035 To DM022807	VD7AA B

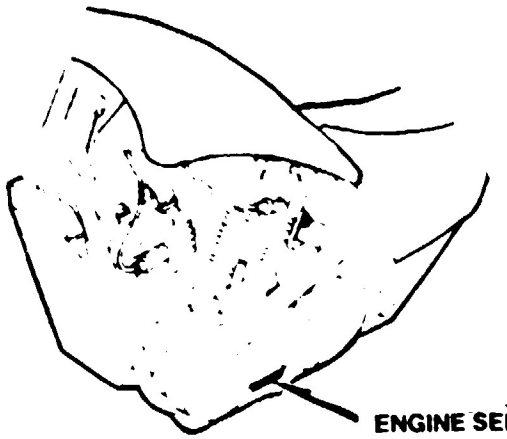

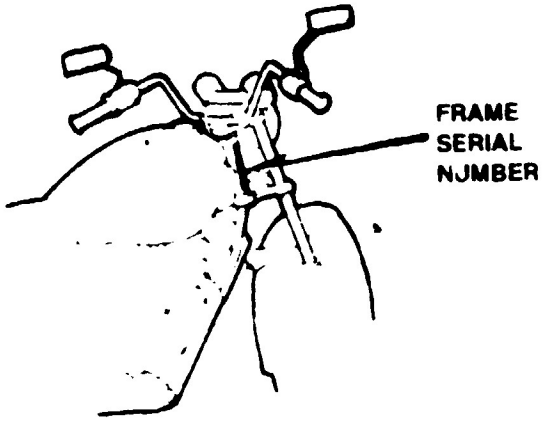

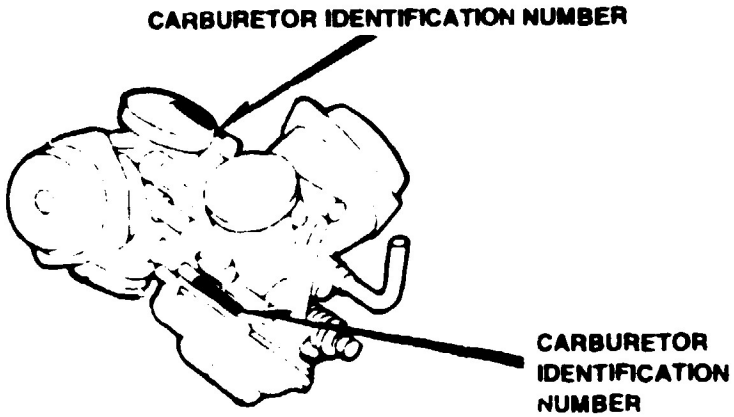

 © American Honda Motor Co., Inc 1993

Construction of Vehicle Identification Number (V.I.N.)

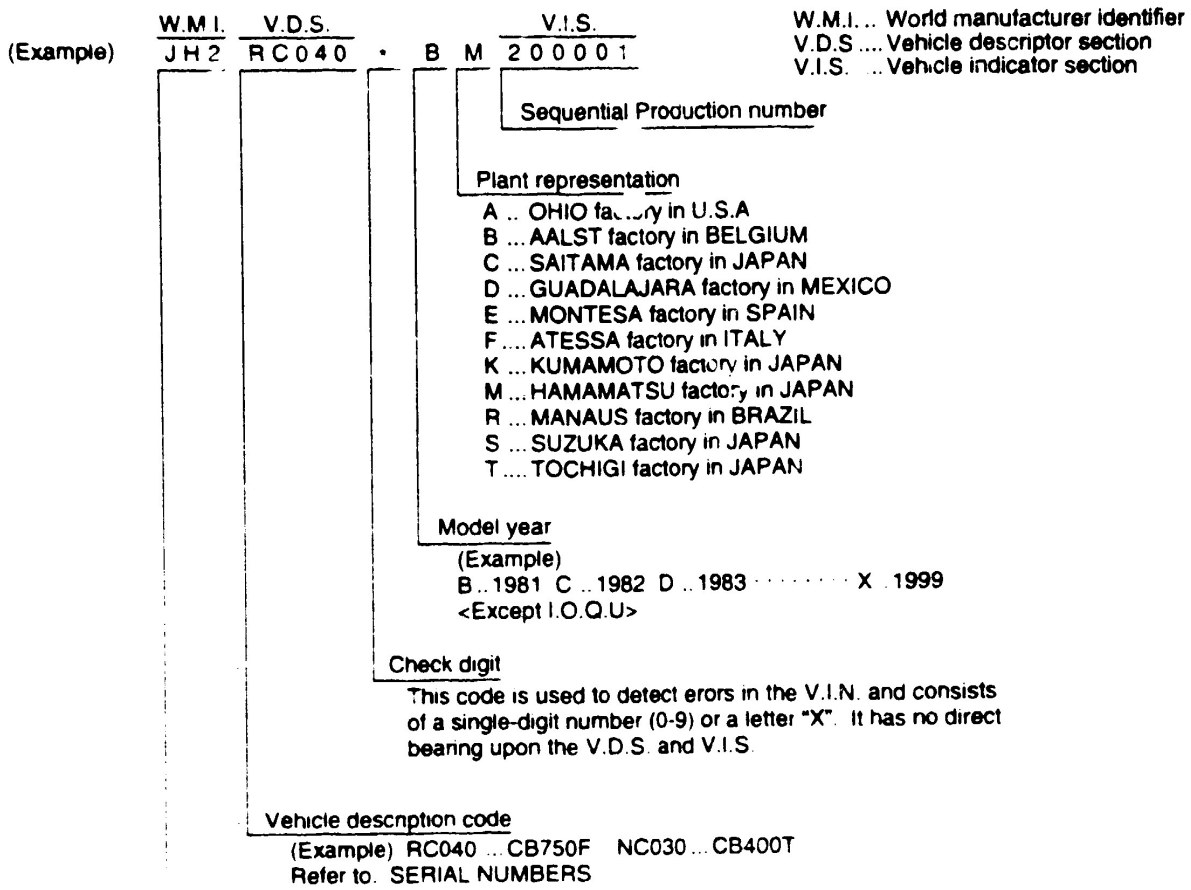

Any change or modification of parts is directly related to the V.D.S. and V.I.S.
A V.I.S. number will appear in the "Serial No." column of the Parts Catalog if a part is changed or modified.

COMMENT
This example is generic and applies to 1981 and newer vehicles. 1980 models and prior are refered to as "FRAME NUMBERS" and the construction is designed by using the model designation or code followed by a sequential number.

© American Honda Motor Co., Inc. 1993

Color Tables

Color Chart

- (WL) = Stripes and labels other than caution labels are included in parts whose part name end in (WL).
- (WOL) = Stripes and labels are not included in parts whose part name end in (WOL).

COLOR CODE TABLE (Color Descriptions omitted from the main text of the catalog)

TYPE OF PARTS	COLOR CODE	COLOR DESCRIPTION
PAINTED PARTS	A	WHITE
	B	BLACK
	C	SCARLET
	E	ROYAL BLUE
	N	DARK BLUE
	Q	MARUEM BLUE
	R	IVORY YELLOW
	S	DARK SILVER
	T	METALLIC SILVER
	XW	CHROME
	Z	PRIMER
	ZZ	PRIMER
VINYL PARTS	A	BLACK
	B	BLUE
	D	LIGHT BLUE
	E	SCARLET
	G	DARK ROSE
	N	ELEPHANT GRAY & IVORY
	Q	WHITE
	V	IVORY

VT © American Honda Motor Co., Inc. 1993 14ME90M

Color Tables

Color Application Chart

- When ordering a part of a particular color or type, refer to the chart below for the model color and color label application.
- (WL) = Stripes and labels other than caution labels are included in parts whose part name end in (WL).
- (WOL) = Stripes and labels are not included in parts whose part name end in (WOL).

COLOR CODE TABLE (Color Descriptions omitted from the main text of the catalog)

MODEL	VT750C$_D$ '83	
COLOR	Candy Wineberry Red-U	Black-Z
COLOR CODE	R-114C-U	NH-1-Z
FUEL TANK	R114CU	NH1Z
R SIDE COVER SET	R114CU	NH1Z
L SIDE COVER SET	R114CU	NH1Z
REAR FENDER A	R114CU	NH1Z
REAR FENDER B	R114CU	NH1Z
FRAME BODY	NH1	NH1
DRIVE CAUTION MARK	A73	A73
SIDE COVER EMBLEM	TYPE 1	TYPE 2

Note When applicable "From" and "To" followed by a Serial Number in the Description column indicates the application range when present "A C" followed by a code indicates the Area Code

 © American Honda Motor Co., Inc. 1993

Manuals

DESCRIPTION	PART NUMBER	HONDA CODE
SERVICE MANUAL, VT750C/700C, '83, '84, '85 SHADOW	61ME902	1844521
OWNER'S MANUAL, VT750C'83	31ME9600	1373083

© American Honda Motor Co., Inc. 1993

Memo

Model ID Photo

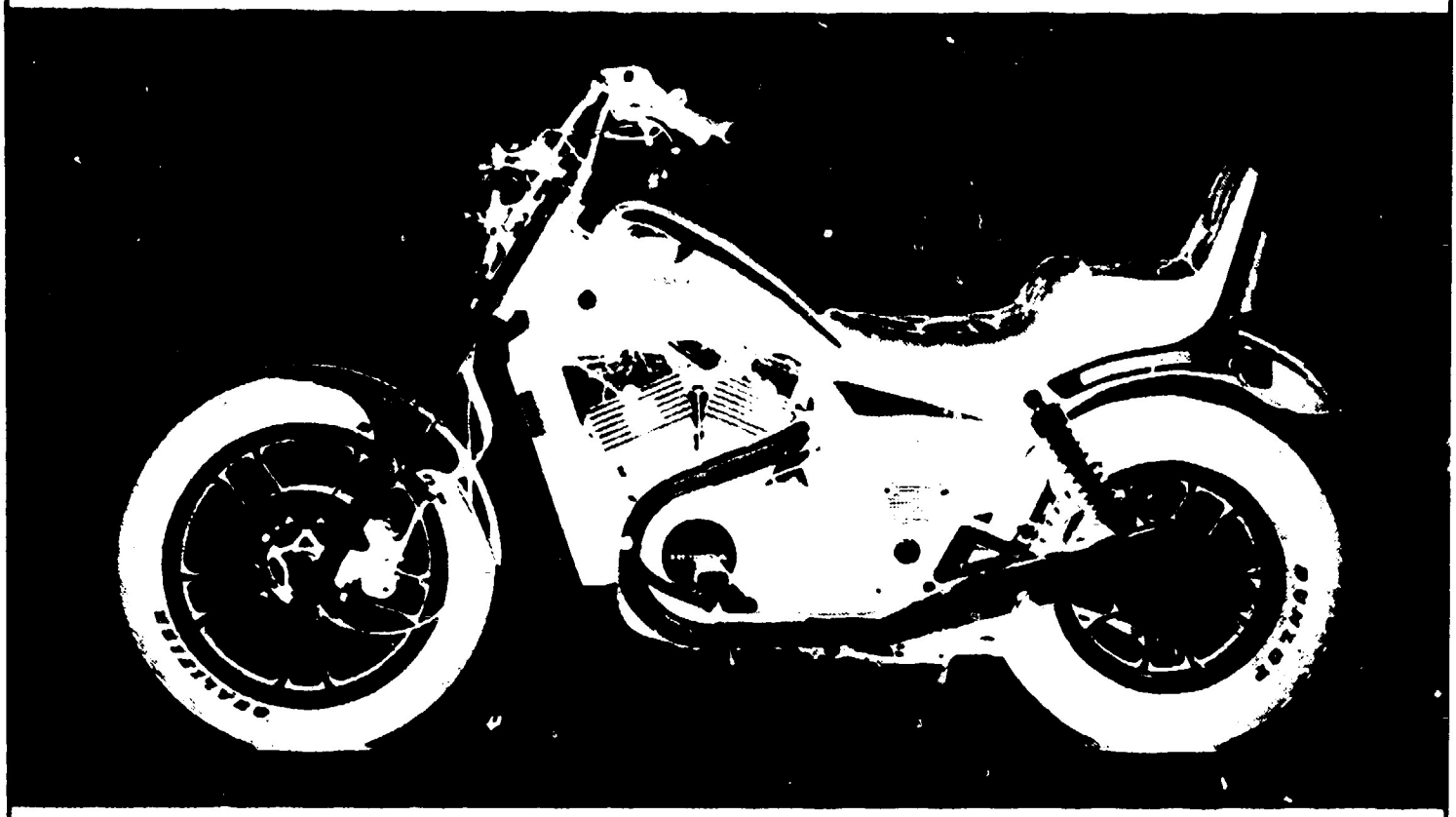

VT750C'83 SHADOW 750

 © American Honda Motor Co., Inc. 1993

Specifications

SECTION/SUBJECT	VT750C'83	
ENGINE		
Cylinder	Four Cylinders	
Strokes	4-Stroke	
Cooling	Liquid Cooled	
Camshaft	SOHC	
Valves per cylinder	3	
Displacement	749cc	
Lubrication system	Wet Sump	
Carburetor	C.V. VD7AA, 32mm	
Main jet	# 115	
TRANSMISSION		
Transmission type	Manual	
Transmission speeds	6 Speed	
Clutch	Manual	
Shift pattern	1-2-3-4-5-OD	
CHASSIS		
Fuel tank capacity (Std)	3.3gal	
Fuel tank capacity (Res)	0.5gal	
Air filter type	Foam	
Foam filter oil - Pro Honda	P/N: 08207-0001	
Front Brake	Double Disc	
Rear Brake	Internal expand shoe	
Front tire	110/90 X 19 62H	
Tire pressure	32PSI	
Rear tire	140/90 X 15 70H	
Tire pressure	40PSI	
SERVICE/TUNING		
Ignition type	CDI	
Spark plug gap	0.8-0.9mm (0.031-0.035")	
LUBRICATION		
Recommended fuel	86+ Octane	
Engine oil - Pro Honda:		
GN4 10W40	P/N: 08206-0001	
GN4 20W50	P/N: 08206-0002	
Engine oil capacity:		
After draining	3.4qts	
After reassembly	3.7qts	
Coolant type	P/N: CUO8730	
Coolant ratio	50:50	

(Continued)

 © American Honda Motor Co., Inc. 1993

Model ID Photo

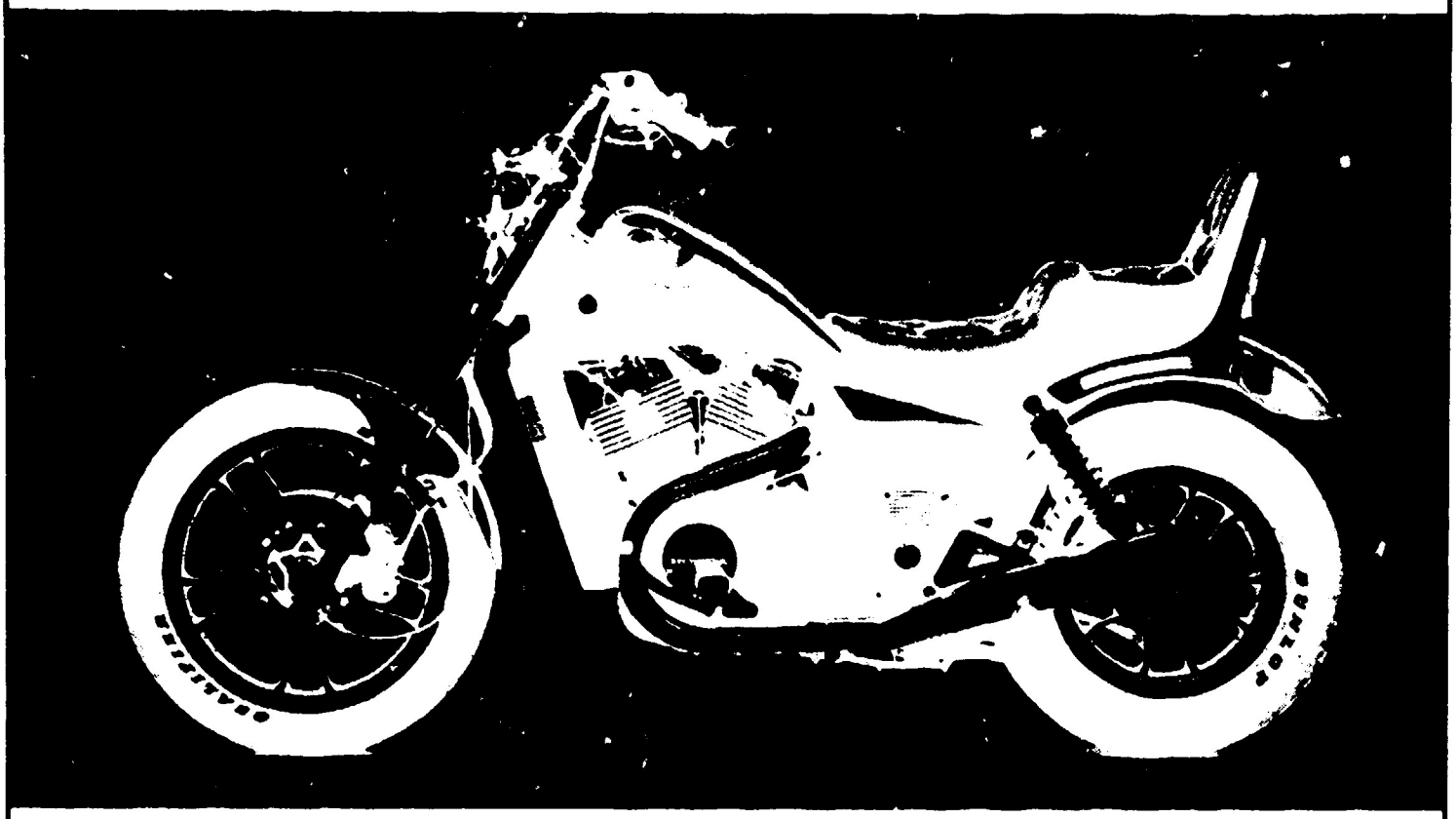

VT750C'83 SHADOW 750

 © American Honda Motor Co., Inc. 1993

Specifications

SECTION/SUBJECT	VT750C'83	
LUBRICATION (continued)		
Drive shaft and final gear case Pro Honda shaft drive oil	P/N. 08208-0080	
Fork oil Pro Honda Viscosity Capacity after draining	P/N. 08208-0010 10W 470cc	
Brake fluid - Pro Honda DOT 4	P/N. 08203-0004	

 © American Honda Motor Co., Inc. 1993

Bulk Hose

BULK HOSE CROSS REFERENCE CHART

To convert a cut hose part number to the equivalent of roll hose simply match the two part numbers using the following chart, cutting the required length indicated by the cut hose part number.

FUEL HOSE

CURRENT CATALOG LISTING	BULK HOSE PART NUMBER
95001-35 — — — - 2 —	95001-35003-20M
95001-35 — — — - 4 —	95001-35003-40M
95001-45 — — — - 2 —	95001-45003-20M
95001-45 — — — - 4 —	95001-45008-40M
95001-55 — — — - 2 —	95001-55008-20M
95001-55 — — — - 4 —	95001-55008-40M
95001-75 — — — - 4 —	95001-75008-40M

VACUUM HOSE

CURRENT CATALOG LISTING	BULK HOSE PART NUMBER
95005-35 — — — - 2 —	95005-35008
95005-35 — — — - 3 —	
95005-35 — — — - 1 —	
95005-45 — — — - 2 —	95005-45008-10M
95005-45 — — — - 3 —	
95005-50 — — — - 3 —	95005-50003-30M
95005-55 — — — - 2 —	95005-55003-20M
95005-70 — — — - 3 —	95005-70003-30M
95005-75 — — — - 1 —	95005-75003-10M
95005-75 — — — - 2 —	
95005-80 — — — - 1 —	95005-80008-10M
95005-80 — — — - 2 —	
95005-80 — — — - 3 —	
95005-12 — — — - 2 —	95005-12003-10M

ORDERING INFORMATION

FUEL HOSE

PART NUMBER	H/C	INSIDE DIAMETER	ROLL LENGTH
95001-35003-20M	2380533	3.5 mm	3M (9.9ft)
95001-35003-40M	2380541	3.5 mm	3M (9.9ft)
95001-45003-20M	2380558	4.5 mm	3M (9.9ft)
95001-45008-30M	2324986	4.5 mm	8M (26.4ft)
95001-55008-20M	2386134	5.3 mm	8M (26.4ft)
95001-55008-30M	2385896	5.3 mm	8M (26.4ft)
95001-75003-20M	2385094	7.5 mm	3M (9.9ft)
95001-75003-30M	2385904	7.5 mm	3M (9.9ft)

VACUUM HOSE

PART NUMBER	H/C	INSIDE DIAMETER	ROLL LENGTH
95005-35008-10M	2325058	3.5 mm	8M (26.4ft)
95005-45008-10M	2325082	4.5 mm	8M (26.4ft)
95005-50003-30M	2380608	5.0 mm	3M (9.9ft)
95005-55008-10M	2386886	5.5 mm	8M (26.4ft)
95005-65003-20M	2380624	6.5 mm	3M (9.9ft)
95005-75003-10M	2380640	7.3 mm	3M (9.9ft)
95005-80008-10M	2325108	8.0 mm	8M (26.4ft)
95005-12003-10M	2380657	12.0 mm	3M (9.9ft)
95005-14003-20M	2380665	14.0 mm	3M (9.9ft)

CAUTION Damage to vacuum hose will result from contact with fuel. Do not use vacuum hose in place of fuel hose.

 © American Honda Motor Co., Inc. 1993

Bulk Hose

CONSTRUCTION OF FUEL AND VACUUM HOSE PART NUMBER

Part Number
(Example) 9 5 0 0 1 - 7 5 0 0 8 - 4 0 M

Roll Hose

All Roll hose Part Numbers have an "M" in this position

Appearance Code Key

For Type 1 ONLY Fuel:
2: Red, braided exterior
4: Gray with red stripe, smooth exterior

For Type 5 ONLY Vacuum:
1: Dark gray, smooth exterior
2. Dark gray, smooth exterior
3. Black, smooth exterior

Length

Cut Hose = length is in millimeters (mm)
Bulk Hose = length is in meters (M)

Inside Diameter Code

12 = 12.0mm	55 = 5.3mm or 5.5mm
35 = 3.5mm	70 = 7.0mm
45 = 4.5mm	75 = 7.3mm or 7.5mm
50 = 5.0mm	80 = 8.0mm

Type Code Key

1 = Fuel Hose
5 = Vacuum Hose

CAUTION: Damage to vacuum hose will result from contact with fuel. Do not use vacuum hose in place of fuel hose.

 © American Honda Motor Co., Inc. 1993

COMMONLY REQUIRED REPLACEMENT PARTS

VT750C'83

Ref. No.	DESCRIPTION	SERIAL NUMBER FROM	SERIAL NUMBER TO	QTY REQ	PART NUMBER	HONDA CODE
	BATTERY (HYB 16)	-------	-------	1	31500-ME9-611	2575306
	BATTERY (HYB 16)	-------	-------	1	31500-ME9-671	1335348
	BATTERY (HYB 16)	-------	-------	1	31500-ME9-674	4108064
	BATTERY (HYB16A-A)	-------	-------	1	31500-ME9-672	2432946
	BATTERY (HYB16A-A)	-------	-------	1	31500-ME9-673	3000239
	BULB, HEADLIGHT (H4 JA12V60/55W)	-------	-------	1	34901-MC7-601	1288612
	BULB, TAILLIGHT (STANLEY) (12V 27/8W)	-------	-------	1	34906-425-771	0924134
	BULB, TURN SIGNAL (12V23/8W) (STANLEY)	-------	-------	2	34905-425-671	0824326
	BULB, TURN SIGNAL (12V 23W)	-------	-------	2	34905-268-671	0145318
	CABLE, SPEEDOMETER INNER	-------	-------	1	44831-ME1-670	1756733
	DISK, CLUTCH FRICTION	-------	-------	4	22201-MB0-003	1242551
	DISK, CLUTCH FRICTION	-------	-------	4	22201-MM5-000	3143401
	DISK, CLUTCH FRICTION	-------	-------	2	22201-ME9-000	1373430
	FILTER, OIL	-------	-------	1	15400-679-023	1384445
	FILTER, OIL	-------	-------	1	15410-MB0-000	1395417
	FILTER, OIL	-------	-------	1	15410-MB0-003	1241702
	FILTER, OIL	-------	-------	1	15410-MJ0-003	1689611
	FILTER, OIL	-------	-------	1	15410-MJ0-004	3481355
	FILTER, OIL (TOKYO)	-------	-------	1	15400-679-013	0801597
	FUSE B (15A)	-------	-------	5	38231-SA5-003	1131119
	FUSE F (30A)	-------	-------	2	98200-53000	0412676
	FUSE, BLADE (15A)	-------	-------	5	98200-31500	1644244
	GASKET SET	-------	-------	2	16010-MB6-305	3911518
	GASKET SET	-------	-------	2	16010-ME9-671	1393628
	GASKET SET	-------	-------	2	16010-ME9-672	2312981
	GASKET SET	-------	-------	2	16010-ME9-721	3039849
	GASKET, CLUTCH COVER	-------	-------	1	11372-ME9-000	1366830
	GASKET, CLUTCH COVER	-------	-------	1	11372-ME9-000	1366830
	GASKET, EX. PIPE	-------	-------	2	18291-ME9-000	1367929
	GASKET, EX. PIPE	-------	-------	2	18291-ME9-000	1367929

 © American Honda Motor Co., Inc. 1993

COMMONLY REQUIRED REPLACEMENT PARTS

VT750C'83

Ref. No.	DESCRIPTION	SERIAL NUMBER FROM	SERIAL NUMBER TO	QTY REQ	PART NUMBER	HONDA CODE
	GRIP, L. HANDLEBAR	-------	-------	1	53166-MB1-000	1249796
	GRIP, R. HANDLEBAR	-------	-------	1	53165-MB1-000	1249788
	HANDLEBAR	-------	-------	1	53100-ME9-670	1370501
	HANDLEBAR	-------	-------	1	53100-ME9-671	4067153
	HANDLEBAR, COMP., R.	-------	-------	1	53175-MJ6-006	1776590
	HEADLIGHT UNIT	-------	-------	1	33120-MB1-671	1246347
	HEADLIGHT UNIT	-------	-------	1	33120-MB1-770	1295963
	HEADLIGHT UNIT	-------	-------	1	33120-ME9-670	1455211
	HEADLIGHT UNIT	-------	-------	1	33120-ME9-671	1510270
	HEADLIGHT UNIT	-------	-------	1	33120-[illegible]F5-751	2008902
	KEY, BLANK (TYPE 1)	-------	-------	(1)	35121-KW3-771	3029840
	KEY, BLANK (TYPE 1)	-------	-------	(1)	35121-MA6-81[illegible]	1246750
	KEY, BLANK (TYPE 2)	-------	-------	(1)	35122-KW3-771	3029857
	KEY, BLANK (TYPE 2)	-------	-------	(1)	35122-MA6-811	1246768
	LENS, TURN SIGNAL	-------	-------	4	33402-MB1-003	1260397
	MIRROR, L.	-------	-------	1	88120-ME9-671	1436088
	MIRROR, R.	-------	-------	1	88110-ME9-671	1436070
	PLUG, SPARK (DPR7EA-9 NGK)	-------	-------	(2)	98069-57916	1103076
	PLUG, SPARK (DPR7EA-9 NGK)	-------	-------	(2)	98069-57916	1103076
	PLUG, SPARK (DPR8EA-9 NGK)	-------	-------	2	98069-58916	1103084
	PLUG, SPARK (DPR8EA-9 NGK)	-------	-------	2	98069-58916	1103084
	PLUG, SPARK (DPR9EA-9 NGK)	-------	-------	(2)	98069-59916	1103092
	PLUG, SPARK (DPR9EA-9 NGK)	-------	-------	(2)	98069-59916	1103092
	PLUG, SPARK (X22EPR-U9 ND)	-------	-------	(2)	98069-57926	1096817
	PLUG, SPARK (X22EPR-U9 ND)	-------	-------	(2)	98069-57926	1096817
	PLUG, SPARK (X24EPR-U9 ND)	-------	-------	2	98069-58926	1096825
	PLUG, SPARK (X24EPR-U9 ND)	-------	-------	2	98069-58926	1096825
	PLUG, SPARK (X27EPR-U9 ND)	-------	-------	(2)	98069-59926	1096833
	PLUG, SPARK (X27EPR-U9 ND)	-------	-------	(2)	98069-59926	1096833

© American Honda Motor Co., Inc. 1993

CONTENTS BY PAGE NO. SEQUENCE

PAGE TITLE	PAGE	GRID
CYLINDER HEAD COVER	2	B1
CYLINDER • FRONT CYLINDER HEAD	4	B2
CYLINDER • REAR CYLINDER HEAD	6	B3
CAMSHAFT • VALVE	8	B4
CAM CHAIN • TENSIONER	10	B5
RIGHT CRANKCASE COVER	11	B5
CLUTCH	12	B6
STARTING DRIVEN GEAR	14	B7
LEFT CRANKCASE COVER • ALTERNATOR	15	B7
WATER PUMP	17	B8
STARTING MOTOR	19	B9
OIL PUMP • OIL FILTER	21	B10
CRANKCASE	24	B12
PISTON • CRANKSHAFT	26	C1
TRANSMISSION	30	C3
GEARSHIFT DRUM	32	C4
WATER PIPE • THERMOSTAT	34	C5
CROSS SHAFT	36	C6
CARBURETOR ASSY.	39	C7
CARBURETOR COMPONENT	40	C8
GASKET KIT A	42	C9
GASKET KIT B	44	C10
HEADLIGHT	46	D1
SPEEDOMETER • TACHOMETER	48	D2
SWITCH • CABLE	50	D3
FRONT BRAKE MASTER • CYLINDER	52	D4
CLUTCH MASTER CYLINDER	54	D5
HANDLEBAR • TOP BRIDGE	56	D6
STEERING STEM • HORN	58	D7
FRONT FENDER	60	D8
FRONT FORK	61	D8
FRONT BRAKE CALIPER	64	D10
FRONT WHEEL	66	D11
REAR BRAKE PANEL	68	D12
REAR WHEEL	70	E1
FINAL DRIVEN GEAR	71	E1
FUEL TANK	75	E3
SEAT	78	E5
SIDE COVER	80	E6
BATTERY • FUEL PUMP	82	E7
AIR CLEANER	84	E8
MUFFLER	86	E9
BRAKE PEDAL • CHANGE PEDAL	88	E10
STEP	90	E11
STAND	92	E12
SWINGARM	93	E12
SHOCK ABSORBER	96	F2
REAR FENDER • SPARK UNIT	98	F3
TURN SIGNAL	100	F4
TAILLIGHT	102	F5
WIRE HARNESS • IGNITION COIL	104	F6
RADIATOR	106	F7
FRAME	108	F8
TOOLS	110	F9

 © American Honda Motor Co., Inc 1993

CONTENTS IN ALPHABETICAL ORDER

PAGE TITLE	PAGE	GRID
AIR CLEANER	84	E8
ALTERNATOR	15	B7
BATTERY	82	E7
BRAKE CALIPER, FR.	64	D10
BRAKE MASTER, FR.	52	D4
BRAKE PANEL, RR.	68	D12
BRAKE PEDAL	88	E10
CABLE	50	D3
CAM CHAIN	10	B5
CAMSHAFT	8	B4
CARBURETOR ASSY.	39	C7
CARBURETOR COMPONENT	40	C8
CHANGE PEDAL	88	E10
CLUTCH	12	B6
CLUTCH MASTER CYLINDER	54	D5
CRANKCASE	24	B12
CRANKCASE COVER, L.	15	B7
CRANKCASE COVER, R.	11	B5
CRANKSHAFT	26	C1
CROSS SHAFT	36	C6
CYLINDER	4	B2
CYLINDER	6	B3
CYLINDER	52	D4
CYLINDER HEAD COVER	2	B1
CYLINDER HEAD, FR.	4	B2
CYLINDER HEAD, RR.	6	B3
FENDER, FR.	60	D8
FENDER, RR.	98	F3
FINAL DRIVEN GEAR	71	E1
FORK, FR.	61	D8
FRAME	108	F8
FUEL PUMP	82	E7
FUEL TANK	75	E3
GASKET KIT A	42	C9
GASKET KIT B	44	C10
GEARSHIFT DRUM	32	C4
HANDLEBAR	56	D6
HEADLIGHT	46	D1
HORN	58	D7
IGNITION COIL	104	F6
MUFFLER	86	E9
OIL FILTER	21	B10
OIL PUMP	21	B10
PISTON	26	C1
RADIATOR	106	F7
SEAT	78	E5
SHOCK ABSORBER	96	F2
SIDE COVER	80	E6
SPARK UNIT	98	F3
SPEEDOMETER	48	D2
STAND	92	E12
STARTING DRIVEN GEAR	14	B7
STARTING MOTOR	19	B9
STEERING STEM	58	D7
STEP	90	E11
SWINGARM	93	E12
SWITCH	50	D3
TACHOMETER	48	D2
TAILLIGHT	102	F5
TENSIONER	10	B5
THERMOSTAT	34	C5
TOOLS	110	F9
TOP BRIDGE	56	D6
TRANSMISSION	30	C3
TURN SIGNAL	100	F4
VALVE	8	B4
WATER PIPE	34	C5
WATER PUMP	17	B8
WHEEL, FR.	66	D11
WHEEL, RR.	70	E1
WIRE HARNESS	104	F6

© AMERICAN HONDA MOTOR CO., LTD. 1983

CYLINDER HEAD COVER

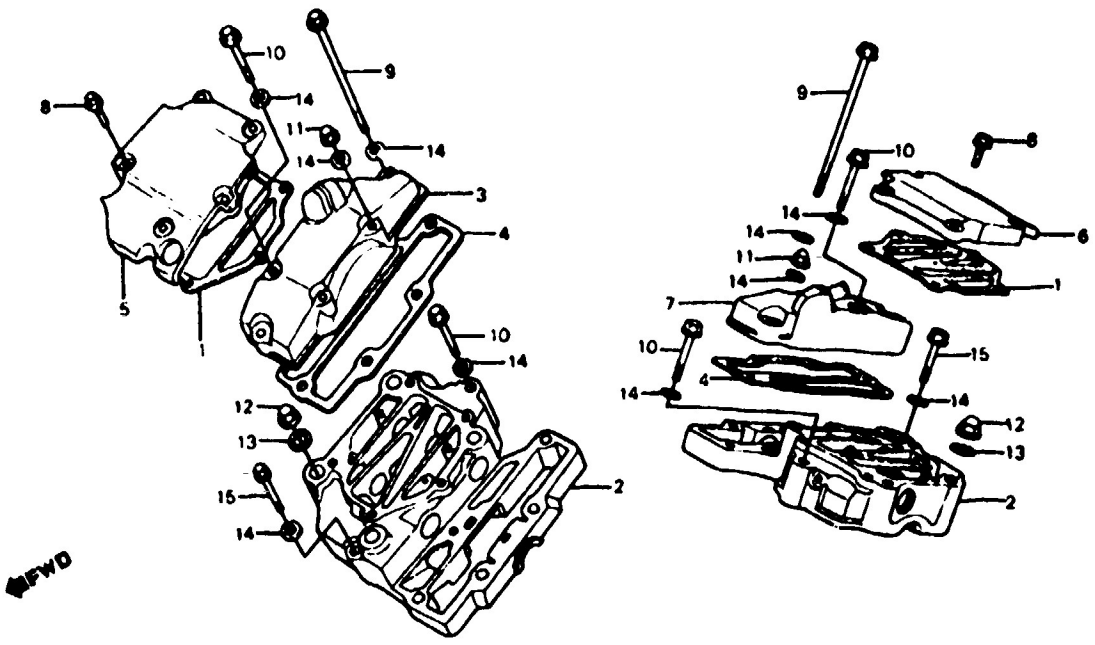

E14ME9001

VT750C'83

BLOCK NO. E-1

Ref. No.	DESCRIPTION	ENGINE SERIAL NUMBER FROM	ENGINE SERIAL NUMBER TO	QTY REQ	PART NUMBER	HONDA CODE
1	GASKET, TAPPET COVER	-- -----	-------	2	12232-ME9-000	1366947
	GASKET, TAPPET COVER	-------	-------	2	12232-ME9-306	4195558
2	COVER COMP., CYLINDER HEAD	-------	-------	2	12310-ME9-000	1366970
3	COVER A, CAM CHAIN	-------	-------	1	12320-ME9-000	1366988
4	GASKET, CAM CHAIN COVER	-------	-------	2	12321-ME9-000	1366996
	GASKET, CAM CHAIN COVEER	-------	-------	2	12321-ME9-306	4300521
5	COVER COMP. A, TAPPET	-------	-------	1	12330-ME9-000	1367002
6	COVER COMP. B, TAPPET	-------	-------	1	12331-ME9-000	1367010
7	COVER B, CAM CHAIN	-------	-------	1	12340-ME9-000	1367028
8	BOLT, FLANGE, 6X18	-------	-------	10	90009-ME9-000	1436047
9	BOLT, FLANGE, 8X145	-------	-------	4	90011-323-000	0292342
10	BOLT, FLANGE, 8X55	-------	-------	4	90051-ME9-000	1536473
11	NUT, FLANGE CAP, 8MM	-------	-------	4	90208-438-000	0765669
12	NUT, FLANGE CAP, 10MM	-------	-------	8	90210-438-000	0758524
13	WASHER, SEALING, 10MM	-------	-------	8	90403-ML4-610	2332013
	WASHER, SEALING, 10MM	-------	-------	8	90403-413-000	0496133

© AMERICAN HONDA MOTOR CO., LTD 1993

VT750C'83 ENGINE NO.; RC14E-2000051 TO 2022747
VT750C'83 FRAME NO.; RC140-DM000035 TO DM022807

VT750C'83

Ref. No.	BLOCK NO. E-1 DESCRIPTION	ENGINE SERIAL NUMBER FROM	TO	QTY REQ	PART NUMBER	HONDA CODE
13	WASHER, SEALING, 10MM	-------	-------	8	90403-413-010	0675256
14	WASHER, SEALING, 7MM	-------	-------	14	90441-ME9-000	1371152
15	BOLT, FLANGE, 8X50	-------	-------	2	95700-08050-00	0687871
	BOLT, FLANGE, 8X50	-------	-------	2	95701-08050-00	2935740

© AMERICAN HONDA MOTOR CO., LTD. 1983

CONTENTS

TITLE	PAGE	GRID
AIR CLEANER	86	E8
ALTERNATOR	17	B8
BATTERY	84	E7
BRAKE CALIPER, FR.	66	D10
BRAKE PANEL, RR.	70	D12
BRAKE PEDAL	90	E10
CABLE	52	D3
CAM CHAIN	10	B5
CAMSHAFT	8	B4
CARBURETOR ASSY.	41	C8
CARBURETOR COMPONENT	42	C9
CHANGE PEDAL	90	E10
CLUTCH	13	B6
CLUTCH MASTER CYLINDER	56	D5
CRANKCASE	26	C1
CRANKCASE COVER, L.	17	B8
CRANKCASE COVER, R.	11	B5
CRANKSHAFT	28	C2
CROSS SHAFT	38	C7
CYLINDER	4	B2
CYLINDER	6	B3
CYLINDER HEAD COVER	2	B1
CYLINDER HEAD, FR.	4	B2
CYLINDER HEAD, RR.	6	B3
FENDER, FR.	62	D8
FENDER, RR.	100	F3
FINAL DRIVEN GEAR	73	E1
FORK, FR.	63	D8
FR. BRAKE MASTER CYLINDER	54	D4
FRAME	110	F8
FUEL PUMP	84	E7
FUEL TANK	77	E3
GASKET KIT A	44	C10
GASKET KIT B	46	C11
GEARSHIFT DRUM	34	C5
HANDLEBAR	58	D6
HEADLIGHT	48	D1
HORN	60	D7
IGNITION COIL	106	F6
MUFFLER	88	E9
OIL FILTER	23	B11
OIL PUMP	23	B11
PISTON	28	C2
RADIATOR	108	F7
SEAT	80	E5
SHOCK ABSORBER	96	F2
SIDE COVER	82	E6
SPARK UNIT	100	F3
SPEEDOMETER	50	D2
STAND	94	E12
STARTING DRIVEN GEAR	16	B8
STARTING MOTOR	21	B10
STEERING STEM	60	D7
STEP	92	E11
SWINGARM	95	E12
SWITCH	52	D3
TACHOMETER	50	D2
TAILLIGHT	104	F5
TENSIONER	10	B5
THERMOSTAT	36	C6
TOOLS	112	F9
TOP BRIDGE	58	D6
TRANSMISSION	32	C4
TURN SIGNAL	102	F4
VALVE	8	B4
WATER PIPE	36	C6
WATER PUMP	19	B9
WHEEL, FR.	68	D11
WHEEL, RR.	72	E1
WIRE HARNESS	106	F6

GRID **B1**

CYLINDER • FRONT CYLINDER HEAD

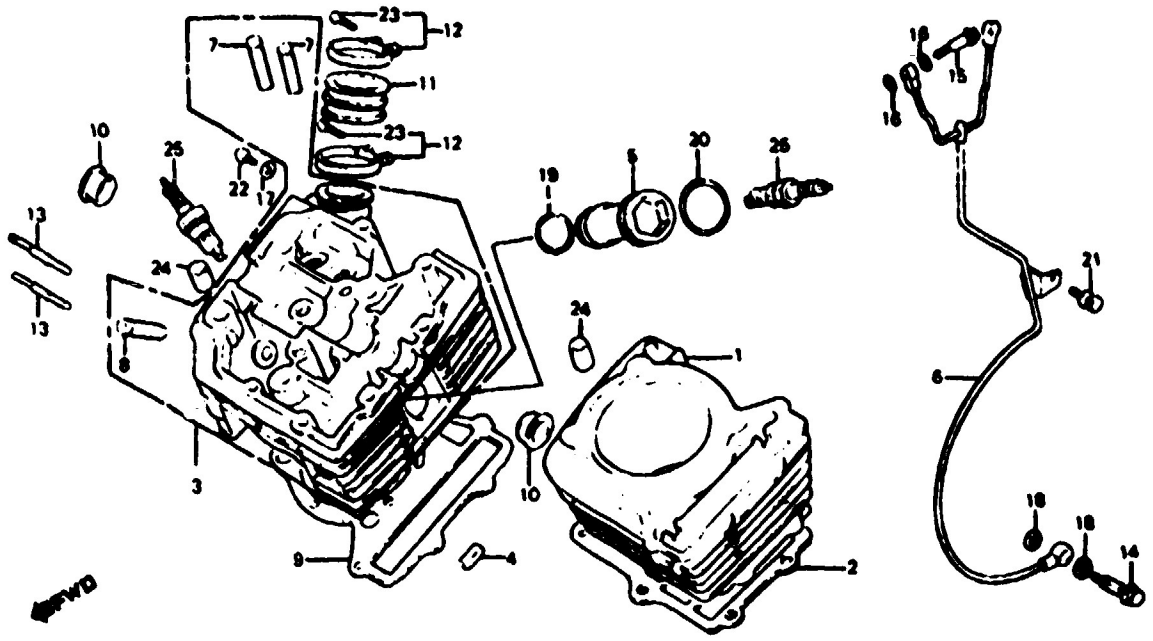

E14ME9002

VT750C'83

BLOCK NO. E-2

Ref. No.	DESCRIPTION	ENGINE SERIAL NUMBER FROM	ENGINE SERIAL NUMBER TO	QTY REQ	PART NUMBER	HONDA CODE
1	CYLINDER COMP. A	-------	-------	1	12100-ME9-000	1366863
2	GASKET, CYLINDER	-------	-------	1	12191-ME9-305	2054302
3	HEAD COMP., CYLINDER (A)	-------	-------	1	12210-ME9-000	1366897
4	RUBBER, BREATHER TUBE	-------	-------	1	12221-ME9-000	1521459
5	SLEEVE, PLUG	-------	-------	1	12225-ME9-000	1366913
6	PIPE A, OIL PATH	-------	-------	1	12230-ME9-000	1366921
	PIPE A, OIL PATH	-------	-------	1	12230-ME9-010	2450690
7	GUIDE, IN. VALVE	-------	-------	2	12231-ME9-305	1366939
	GUIDE, IN. VALVE	-------	-------	2	12231-MG8-305	2025351
8	GUIDE, EX. VALVE	-------	-------	1	12233-ME9-305	1366954
	GUIDE, IN VALVE	-------	-------	1	12233-MG8-405	4118865
9	GASKET, CYLINDER HEAD	-------	-------	1	12250-ME9-305	2027449
	GASKET, CYLINDER HEAD	-------	-------	1	12251-ME9-000	1366962
10	PLUG, CAMSHAFT	-------	-------	2	12312-428-000	0683565
11	INSULATOR, CARBURETOR	-------	-------	1	16211-ME9-000	1367507
12	BAND, INSULATOR	-------	-------	2	16219-ME9-000	1367515

© AMERICAN HONDA MOTOR CO., LTD. 1983

VT750C'83 ENGINE NO.; RC14E-2000051 TO 2022747
VT750C'83 FRAME NO.; RC140-DM000035 TO DM022807

VT750C'83

Ref. No.	BLOCK NO. E-2 DESCRIPTION	ENGINE SERIAL NUMBER FROM	TO	QTY REQ	PART NUMBER	HONDA CODE
13	BOLT, STUD, 6X28	-------	-------	2	90035-ME9-000	1370923
14	BOLT COMP., OIL CONTROL	-------	-------	1	90045-ME9-000	1370949
15	BOLT, SPECIAL, 6X49	-------	-------	2	90054-ME9-000	1758754
16	WASHER, SEALING, 7MM	-------	-------	4	90441-MC0-000	1117936
17	WASHER, THRUST, 5MM	-------	-------	1	90452-323-000	0255224
18	WASHER, OIL BOLT	-------	-------	2	90545-300-000	0189902
19	O-RING, 27.4X2.4 (ARAI)	-------	-------	1	91302-567-003	0335000
	O-RING, 27.4X2.4	-------	-------	1	91304-MG7-003	1871326
20	O-RING, 35X3	-------	-------	1	91351-689-000	0737395
21	BOLT-WASHER, 6X12	-------	-------	1	93491-06012-07	1373364
22	SCREW, PAN, 5X8	-------	-------	1	93500-05008-0A	0145540
23	SCREW, PAN, 5X25	-------	-------	2	93500-05025-06	0477471
24	PIN A, DOWEL, 14X20	-------	-------	4	94301-14200	0295626
25	PLUG, SPARK (DPR7EA-9 NGK)	-------	-------	(2)	98069-57916	1103076
	PLUG, SPARK (X22EPR-U9 ND)	-------	-------	(2)	98069-57926	1096817
	PLUG, SPARK (DPR8EA-9 NGK)	-------	-------	2	98069-58916	1103084
	PLUG, SPARK (X24EPR-U9 ND)	-------	-------	2	98069-58926	1096825
	PLUG, SPARK (DPR9EA-9 NGK)	-------	-------	(2)	98069-59916	1103092
	PLUG, SPARK (X27EPR-U9 ND)	-------	-------	(2)	98069-59926	1096833

© AMERICAN HONDA MOTOR CO., LTD. 1983

CONTENTS

TITLE	PAGE	GRID
AIR CLEANER	86	E8
ALTERNATOR	17	B8
BATTERY	84	E7
BRAKE CALIPER, FR.	66	D10
BRAKE PANEL, RR.	70	D12
BRAKE PEDAL	90	E10
CABLE	52	D3
CAM CHAIN	10	B5
CAMSHAFT	8	B4
CARBURETOR ASSY.	41	C8
CARBURETOR COMPONENT	42	C9
CHANGE PEDAL	90	E10
CLUTCH	13	B6
CLUTCH MASTER CYLINDER	56	D5
CRANKCASE	26	C1
CRANKCASE COVER, L.	17	B8
CRANKCASE COVER, R.	11	B5
CRANKSHAFT	28	C2
CROSS SHAFT	38	C7
CYLINDER	4	B2
CYLINDER	6	B3
CYLINDER HEAD COVER	2	B1
CYLINDER HEAD, FR.	4	B2
CYLINDER HEAD, RR.	6	B3
FENDER, FR.	62	D8
FENDER, RR.	100	F3
FINAL DRIVEN GEAR	73	E1
FORK, FR.	63	D8
FR. BRAKE MASTER CYLINDER	54	D4
FRAME	110	F8
FUEL PUMP	84	E7
FUEL TANK	77	E3
GASKET KIT A	44	C10
GASKET KIT B	46	C11
GEARSHIFT DRUM	34	C5
HANDLEBAR	58	D6
HEADLIGHT	48	D1
HORN	60	D7
IGNITION COIL	106	F6
MUFFLER	88	E9
OIL FILTER	23	B11
OIL PUMP	23	B11
PISTON	28	C2
RADIATOR	108	F7
SEAT	80	E5
SHOCK ABSORBER	98	F2
SIDE COVER	82	E6
SPARK UNIT	100	F3
SPEEDOMETER	50	D2
STAND	94	E12
STARTING DRIVEN GEAR	16	B6
STARTING MOTOR	21	B10
STEERING STEM	60	D7
STEP	92	E11
SWINGARM	95	E12
SWITCH	52	D3
TACHOMETER	50	D2
TAILLIGHT	104	F5
TENSIONER	10	B5
THERMOSTAT	36	C6
TOOLS	112	F9
TOP BRIDGE	58	D6
TRANSMISSION	32	C4
TURN SIGNAL	102	F4
VALVE	8	B4
WATER PIPE	36	C6
WATER PUMP	19	B9
WHEEL, FR.	68	D11
WHEEL, RR.	72	E1
WIRE HARNESS	106	F6

GRID **B2**

CYLINDER • REAR CYLINDER HEAD

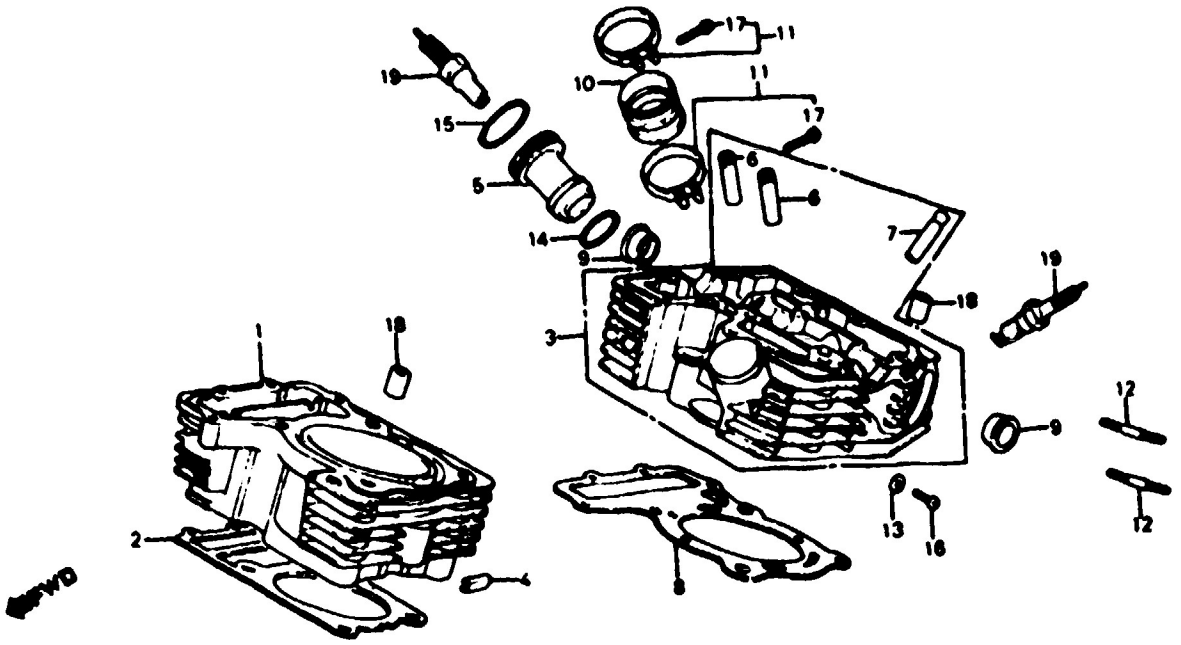

E14ME900201

VT750C'83

Ref. No.	DESCRIPTION	ENGINE SERIAL NUMBER FROM	ENGINE SERIAL NUMBER TO	QTY REQ	PART NUMBER	HONDA CODE
	BLOCK NO. E-2-1					
1	CYLINDER COMP. B	-------	-------	1	12110-ME9-000	1366871
2	GASKET, CYLINDER	-------	-------	1	12191-ME9-305	2054302
3	HEAD COMP., CYLINDER (B)	-------	-------	1	12220-ME9-000	1366905
4	RUBBER, BREATHER TUBE	-------	-------	1	12221-ME9-000	1521459
5	SLEEVE, PLUG	-------	-------	1	12225-ME9-000	1366913
6	GUIDE, IN. VALVE	-------	-------	2	12231-ME9-305	1366939
	GUIDE, IN. VALVE	-------	-------	2	12231-MG8-305	2025351
7	GUIDE, EX. VALVE	-------	-------	1	12233-ME9-305	1366954
	GUIDE, IN VALVE	-------	-------	1	12233-MG8-405	4118865
8	GASKET, CYLINDER HEAD	-------	-------	1	12250-ME9-305	2027449
	GASKET, CYLINDER HEAD	-------	-------	1	12251-ME9-000	1366962
9	PLUG, CAMSHAFT	-------	-------	2	12312-428-000	0683565
10	INSULATOR, CARBURETOR	-------	-------	2	16211-ME9-000	1367507
11	BAND, INSULATOR	-------	-------	2	16219-ME9-000	1367515
12	BOLT, STUD, 6X28	-------	-------	2	90035-ME9-000	1370923
13	WASHER, THRUST, 5MM	-------	-------	1	90452-323-000	0255224

© AMERICAN HONDA MOTOR CO. LTD 1983

VT750C'83 ENGINE NO.; RC14E-2000051 TO 2022747
VT750C'83 FRAME NO.; RC140-DM000035 TO DM022807

VT750C'83

BLOCK NO. E-2-1

Ref. No.	DESCRIPTION	ENGINE SERIAL NUMBER FROM	ENGINE SERIAL NUMBER TO	QTY REQ	PART NUMBER	HONDA CODE
14	O-RING, 27.4X2.4 (ARAI)	-------	-------	1	91302-567-003	0335000
	O-RING, 27.4X2.4	-------	-------	1	91304-MG7-003	1871326
15	O-RING, 35X3	-------	-------	1	91351-689-000	0737395
16	SCREW, PAN, 5X8	-------	-------	1	93500-05008-0A	0145540
17	SCREW, PAN, 5X25	-------	-------	2	93500-05025-06	0477471
18	PIN A, DOWEL, 14X20	-------	-------	4	94301-14200	0295626
19	PLUG, SPARK (DPR7EA-9 NGK)	-------	-------	(2)	98069-57916	1103076
	PLUG, SPARK (X22EPR-U9 ND)	-------	-------	(2)	98069-57926	1096817
	PLUG, SPARK (DPR8EA-9 NGK)	-------	-------	2	98069-58916	1103084
	PLUG, SPARK (X24EPR-U9 ND)	-------	-------	2	98069-58926	1096825
	PLUG, SPARK (DPR9EA-9 NGK)	-------	-------	(2)	98069-59916	1103092
	PLUG, SPARK (X27EPR-U9 ND)	-------	-------	(2)	98069-59926	1096833

© AMERICAN HONDA MOTOR CO. LTD. 1983

CONTENTS

TITLE	PAGE	GRID
AIR CLEANER	86	E8
ALTERNATOR	17	B8
BATTERY	84	E7
BRAKE CALIPER, FR	66	D10
BRAKE PANEL, RR	70	D12
BRAKE PEDAL	90	E10
CABLE	52	D3
CAM CHAIN	10	B6
CAMSHAFT	8	B4
CARBURETOR ASSY	41	C8
CARBURETOR COMPONENT	42	C9
CHANGE PEDAL	90	E10
CLUTCH	13	B6
CLUTCH MASTER CYLINDER	56	D5
CRANKCASE	26	C1
CRANKCASE COVER, L	17	B8
CRANKCASE COVER, R	11	B5
CRANKSHAFT	28	C2
CROSS SHAFT	38	C7
CYLINDER	4	B2
CYLINDER	6	B3
CYLINDER HEAD COVER	2	B1
CYLINDER HEAD, FR	4	B2
CYLINDER HEAD, RR	6	B3
FENDER, FR	62	D8
FENDER, RR	100	F3
FINAL DRIVEN GEAR	73	E1
FORK, FR	63	D8
FR. BRAKE MASTER CYLINDER	54	D4
FRAME	110	F8
FUEL PUMP	84	E7
FUEL TANK	77	E3
GASKET KIT A	44	C10
GASKET KIT B	46	C11
GEARSHIFT DRUM	34	C5
HANDLEBAR	58	D6
HEADLIGHT	48	D1
HORN	60	D7
IGNITION COIL	106	F6
MUFFLER	88	E9
OIL FILTER	23	B11
OIL PUMP	23	B11
PISTON	28	C2
RADIATOR	108	F7
SEAT	80	E5
SHOCK ABSORBER	98	F2
SIDE COVER	82	E6
SPARK UNIT	100	F3
SPEEDOMETER	50	D2
STAND	94	E12
STARTING DRIVEN GEAR	16	B8
STARTING MOTOR	21	B10
STEERING STEM	60	D7
STEP	92	E11
SWINGARM	95	E12
SWITCH	52	D3
TACHOMETER	50	D2
TAILLIGHT	104	F5
TENSIONER	10	B5
THERMOSTAT	36	C6
TOOLS	112	F9
TOP BRIDGE	58	D6
TRANSMISSION	32	C4
TURN SIGNAL	102	F4
VALVE	8	B4
WATER PIPE	36	C6
WATER PUMP	19	B9
WHEEL, FR	66	D11
WHEEL, RR	72	E1
WIRE HARNESS	106	F6

GRID **B3**

CAMSHAFT • VALVE

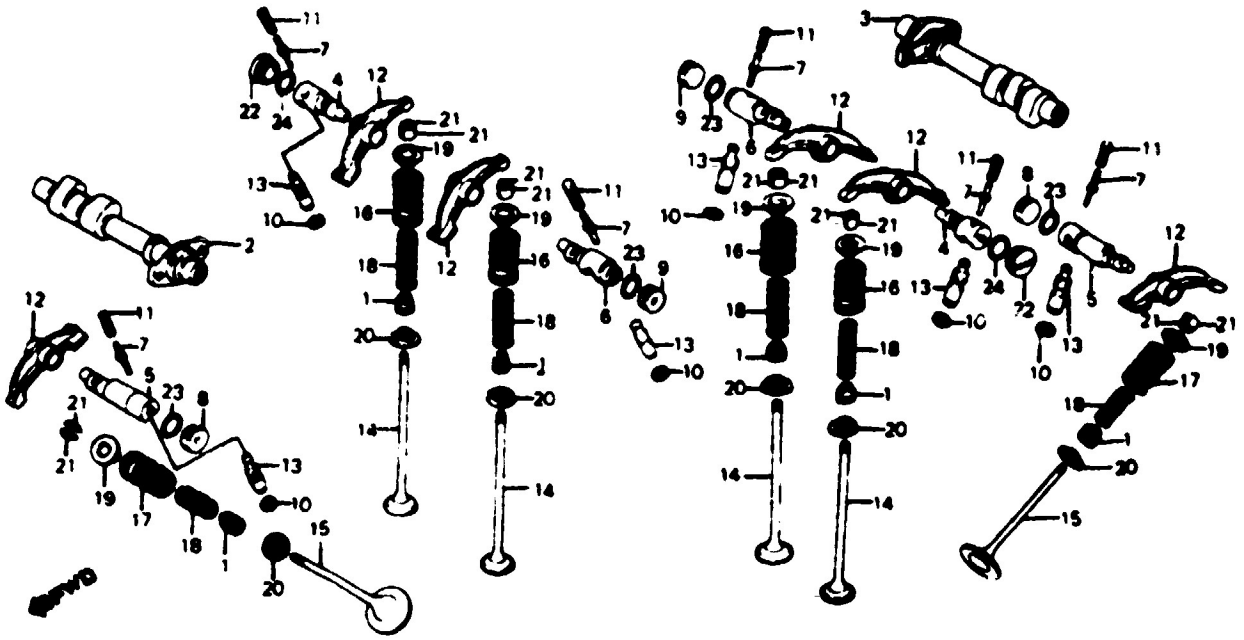

E14ME9003

VT750C'83

Ref. No.	BLOCK NO. E-3 DESCRIPTION	ENGINE SERIAL NUMBER FROM	TO	QTY REQ	PART NUMBER	HONDA CODE
1	SEAL, VALVE STEM (NOK)	-------	-------	6	12209-MB9-003	1094366
	SEAL, VALVE STEM	-------	-------	6	12209-300-003	0188920
2	CAMSHAFT A	-------	2019423	1	14111-ME9-000	1367192
	CAMSHAFT A	-------	-------	1	14111-ME9-010	1503291
3	CAMSHAFT B	-------	2019423	1	14121-ME9-000	1367200
	CAMSHA.. B	-------	-------	1	14121-ME9-010	1503309
4	SHAFT, VALVE ROCKER ARM (A)	-------	-------	2	14451-ME9-000	1367242
5	SHAFT, VALVE ROCKER ARM (B)	-------	-------	2	14452-ME9-000	1367259
6	SHAFT, VALVE ROCKER ARM (C)	-------	-------	2	14453-ME9-000	1367267
7	SHAFT, TAPPET ADJUSTING ASSIST ..	-------	2019423	6	14462-ME9-000	1367283
	SHAFT, TAPPET ADJUSTING ASSIST ..	-------	-------	6	14462-ME9-010	1502954
8	PLUG, ROCKER ARM SHAFT	-------	-------	2	14463-ME9-000	1367291
9	PLUG, ROCKER ARM SHAFT	-------	-------	2	14465-ME9-000	1373380
10	SHIM, TAPPET ADJUSTING (0.5)	-------	-------	AR	14466-ME9-000	1393370
	SHIM, TAPPET ADJUSTING (1.0)	-------	-------	AR	14467-ME9-000	1506286

© AMERICAN HONDA MOTOR CO., LTD. 1983

VT750C'83 ENGINE NO.; RC14E-2000051 TO 2022747
VT750C'83 FRAME NO.; RC140-DM000035 TO DM022807

VT750C'83

BLOCK NO. E-3

Ref. No.	DESCRIPTION	ENGINE SERIAL NUMBER FROM	ENGINE SERIAL NUMBER TO	QTY REQ	PART NUMBER	HONDA CODE
11	SPRING, TAPPET ADJUSTING ASSIST .	201944	--------	6	14461-ME9-010	1503317
		--------	2019423	6	14461-ME9-010	1503317
	SPRING COMP., TAPPET ADUST ASSIST	--------	2019423	6	14470-ME9-000	1414598
	SPRING COMP., TAPPET ADUST ASSIST	--------	2019423	6	14470-ME9-010	1507029
12	ARM, VALVE ROCKER	--------	--------	6	14611-ME9-000	1367325
13	ADJUSTER COMP., HYDRAULIC LASHER	--------	--------	6	14630-ME9-003	1373398
14	VALVE, IN.	--------	--------	4	14711-ME9-000	1367333
15	VALVE, EX.	--------	--------	2	14721-ME9-000	1367341
16	SPRING, IN. VALVE OUTER	--------	--------	4	14751-ME9-000	1367358
17	SPRING, EX. VALVE OUTER	--------	--------	2	14752-ME9-000	1367366
18	SPRING, VALVE INNER	--------	--------	6	14762-ME9-000	1367382
19	RETAINER, VALVE SPRING	--------	--------	6	14771-410-010	0646455
20	SEAT, VALVE SPRING	--------	--------	6	14775-ME9-000	1367390
21	COTTER, VALVE	--------	--------	12	14781-MB9-000	1094416
22	CAP, 22MM	--------	--------	2	90088-ME9-000	1370980
23	O-RING, 15X2.5	--------	--------	4	91302-377-000	0386995
24	O-RING, 19.8x1.9 (ARAI)	--------	--------	2	91308-MG7-003	2316495
	O-RING, 19.8X1.9 (ARAI)	--------	--------	2	91308-PA9-003	0897074

© AMERICAN HONDA MOTOR CO. LTD. 1983

CONTENTS

TITLE	PAGE	GRID
AIR CLEANER	86	E8
ALTERNATOR	17	B8
BATTERY	84	E7
BRAKE CALIPER, FR.	66	D10
BRAKE PANEL, RR.	70	D12
BRAKE PEDAL	90	E10
CABLE	52	D3
CAM CHAIN	10	B5
CAMSHAFT	8	B4
CARBURETOR ASSY.	41	C8
CARBURETOR COMPONENT	42	C9
CHANGE PEDAL	90	E10
CLUTCH	13	B6
CLUTCH MASTER CYLINDER	56	D5
CRANKCASE	26	C1
CRANKCASE COVER, L.	17	B8
CRANKCASE COVER, R.	11	B5
CRANKSHAFT	28	C2
CROSS SHAFT	38	C7
CYLINDER	4	B2
CYLINDER	6	B3
CYLINDER HEAD COVER	2	B1
CYLINDER HEAD, FR.	4	B2
CYLINDER HEAD, RR.	6	B3
FENDER, FR.	62	D8
FENDER, RR.	100	F3
FINAL DRIVEN GEAR	73	E1
FORK, FR.	63	D8
FR. BRAKE MASTER CYLINDER	54	D4
FRAME	110	F8
FUEL PUMP	84	E7
FUEL TANK	77	E3
GASKET KIT A	44	C10
GASKET KIT B	46	C11
GEARSHIFT DRUM	34	C5
HANDLEBAR	58	D6
HEADLIGHT	48	D1
HORN	60	D7
IGNITION COIL	106	F6
MUFFLER	88	E9
OIL FILTER	23	B11
OIL PUMP	23	B11
PISTON	28	C2
RADIATOR	108	F7
SEAT	80	E5
SHOCK ABSORBER	98	F2
SIDE COVER	82	E6
SPARK UNIT	100	F3
SPEEDOMETER	50	D2
STAND	94	E12
STARTING DRIVEN GEAR	16	B8
STARTING MOTOR	21	B10
STEERING STEM	60	D7
STEP	92	E11
SWINGARM	95	E12
SWITCH	52	D3
TACHOMETER	50	D2
TAILLIGHT	104	F5
TENSIONER	10	B5
THERMOSTAT	36	C6
TOOLS	112	F9
TOP BRIDGE	58	D6
TRANSMISSION	32	C4
TURN SIGNAL	102	F4
VALVE	8	B4
WATER PIPE	36	C6
WATER PUMP	19	B9
WHEEL, FR.	68	D11
WHEEL, RR.	72	E1
WIRE HARNESS	106	F6

GRID **B4**

CAM CHAIN • TENSIONER

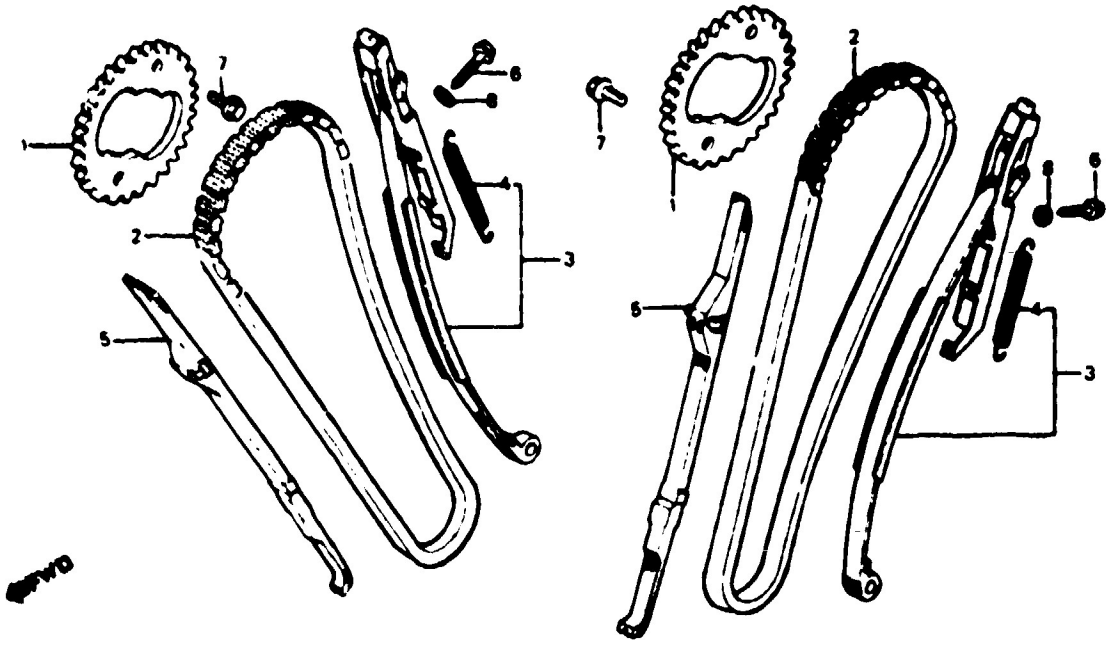

Ref. No.	DESCRIPTION	ENGINE SERIAL NUMBER FROM	ENGINE SERIAL NUMBER TO	QTY REQ	PART NUMBER	HONDA CODE
	VT750C'83 BLOCK NO. E-4					
1	SPROCKET, CAM (42T)	-------	-------	2	14322-ME9-000	1367226
2	CHAIN, CAM (128LE TSUBAKIMOTO) ..	-------	-------	2	14401-ME9-003	1392174
	CHAIN, CAM (128LE DAIDO)	-------	-------	2	14401-ME9-004	1414580
	CHAIN, CAM	-------	-------	2	14401-MR5-671	3136454
3	TENSIONER COMP., CAM CHAIN	-------	-------	2	14510-ME9-000	1367309
	TENSIONER COMP., CAM CHAIN	-------	-------	2	14510-ME9-010	1780949
	TENSIONER COMP., CAM CHAIN	-------	-------	2	14510-ME9-020	1794809
4	SPRING, CAM CHAIN TENSIONER	-------	-------	2	14516-471-000	1038090
5	GUIDE, CAM CHAIN	-------	-------	2	14522-ME9-000	1367317
6	BOLT, SPECIAL, 6X26	-------	-------	2	90011-471-000	1039056
7	BOLT, UBS, 7X15	-------	-------	4	90026-ME9-000	1370915
	BOLT, UBS, 7X15	-------	-------	4	90026-MM8-000	2566990
8	WASHER, SEALING, 6MM	-------	-------	2	90441-706-000	0163600

© AMERICAN HONDA MOTOR CO., LTD. 1983

VT750C'83 ENGINE NO.; RC14E-2000051 TO 2022747
VT750C'83 FRAME NO.; RC140-DM000035 TO DM022807

RIGHT CRANKCASE COVER

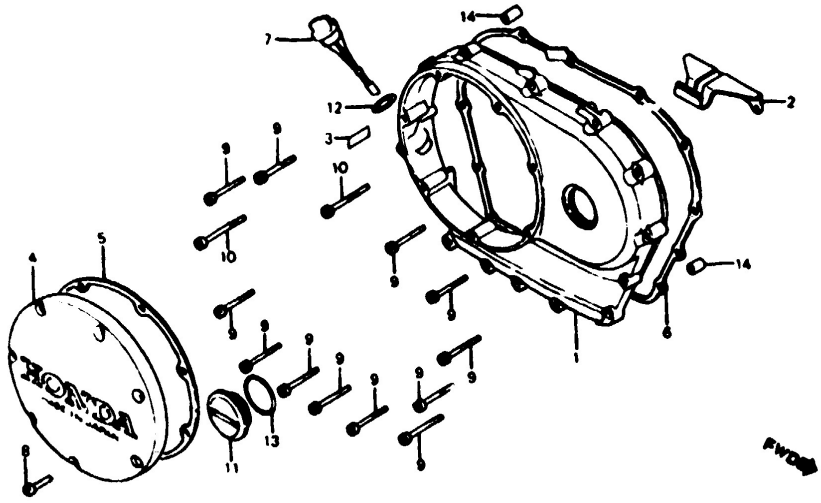

E14ME9005

VT750C'83

BLOCK NO. E-5

Ref. No.	DESCRIPTION	ENGINE SERIAL NUMBER FROM	ENGINE SERIAL NUMBER TO	QTY REQ	PART NUMBER	HONDA CODE
1	COVER, R. CRANKCASE	-------	-------	1	11330-ME9-000	1366764
2	GUIDE, RR. BRAKE CABLE	-------	-------	1	11321-ME9-000	1413277
4	COVER, CLUTCH	-------	-------	1	11370-ME9-000	1366822
5	GASKET, CLUTCH COVER	-------	-------	1	11372-ME9-000	1366830
6	GASKET, R. COVER	-------	-------	1	11394-ME9-000	1366848
	GASKET, R. COVER	-------	-------	1	11394-MK7-306	4315354
	GASKET, R. COVER	-------	-------	1	11394-MK7-670	2312726
7	GAUGE, OIL LEVEL	-------	-------	1	15650-MK7-670	2312973
	GAUGE, OIL LEVEL	-------	-------	1	15650-449-000	0789735
8	BOLT, SOCKET, 6X20	-------	-------	7	90072-ME9-000	1415413
9	BOLT, SOCKET, 6X38	-------	-------	12	90075-ME9-000	1414663
10	BOLT, SOCKET, 6X50	-------	-------	2	90076-ME9-000	1414671
11	CAP, 45MM	-------	-------	1	90087-ME9-000	1370972
12	O-RING, 22X3.0	-------	-------	1	91301-250-000	0035287
	O-RING, 22X3.0	-------	-------	1	91307-425-003	1216126
13	O-RING, 41.5X2	-------	-------	1	91358-MC7-003	1373414

© AMERICAN HONDA MOTOR CO. LTD. 1983

CONTENTS

TITLE	PAGE	GRID
AIR CLEANER	86	E8
ALTERNATOR	17	B8
BATTERY	84	E7
BRAKE CALIPER, FR.	66	D10
BRAKE PANEL, RR.	70	D12
BRAKE PEDAL	90	E10
CABLE	52	D3
CAM CHAIN	10	B5
CAMSHAFT	8	B4
CARBURETOR ASSY.	41	C8
CARBURETOR COMPONENT	42	C9
CHANGE PEDAL	90	E10
CLUTCH	13	B6
CLUTCH MASTER CYLINDER	56	D5
CRANKCASE	26	C1
CRANKCASE COVER, L.	17	B8
CRANKCASE COVER, R.	11	B5
CRANKSHAFT	28	C2
CROSS SHAFT	38	C7
CYLINDER	4	B2
CYLINDER	6	B3
CYLINDER HEAD COVER	2	B1
CYLINDER HEAD, FR.	4	B2
CYLINDER HEAD, RR.	6	B3
FENDER, FR.	62	D8
FENDER, RR.	100	F3
FINAL DRIVEN GEAR	73	E1
FORK, FR.	63	D8
FR. BRAKE MASTER CYLINDER	54	D4
FRAME	110	F8
FUEL PUMP	84	E7
FUEL TANK	77	E3
GASKET KIT A	44	C10
GASKET KIT B	46	C11
GEARSHIFT DRUM	34	C5
HANDLEBAR	58	D6
HEADLIGHT	48	D1
HORN	60	D7
IGNITION COIL	106	F6
MUFFLER	88	E9
OIL FILTER	23	B11
OIL PUMP	23	B11
PISTON	28	C2
RADIATOR	108	F7
SEAT	80	E5
SHOCK ABSORBER	98	F2
SIDE COVER	82	E6
SPARK UNIT	100	F3
SPEEDOMETER	50	D2
STAND	94	E12
STARTING DRIVEN GEAR	16	B8
STARTING MOTOR	21	B10
STEERING STEM	60	D7
STEP	92	E11
SWINGARM	95	E12
SWITCH	52	D3
TACHOMETER	50	D2
TAILLIGHT	104	F5
TENSIONER	10	B5
THERMOSTAT	36	C6
TOOLS	112	F9
TOP BRIDGE	58	D6
TRANSMISSION	32	C4
TURN SIGNAL	102	F4
VALVE	8	B4
WATER PIPE	36	C6
WATER PUMP	19	B9
WHEEL, FR.	66	D11
WHEEL, RR.	72	E1
WIRE HARNESS	106	F6

GRID **B5**

RIGHT CRANKCASE COVER

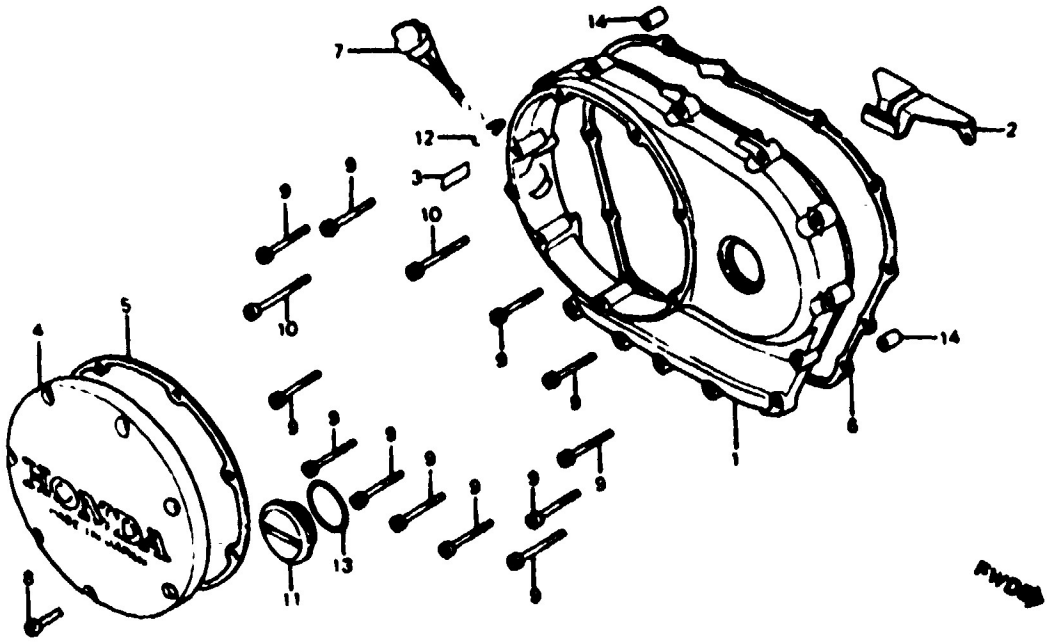

E14ME9005

VT750C'83

Ref. No.	DESCRIPTION (BLOCK NO. E-5)	ENGINE SERIAL NUMBER FROM	ENGINE SERIAL NUMBER TO	QTY REQ	PART NUMBER	HONDA CODE
	14 PIN A, DCYEL, 8X14	-------	-------	2	94301-08140	0069310

© AMERICAN HONDA MOTOR CO., LTD. 1983

VT750C'83 ENGINE NO.; RC14E-2000051 TO 2022747
VT750C'83 FRAME NO.; RC140-DM000035 TO DM022807

CLUTCH

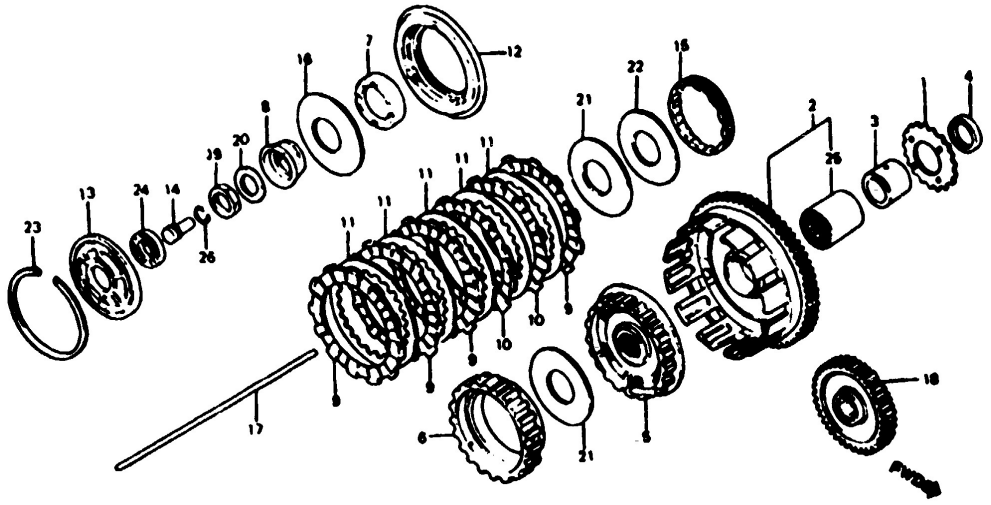

VT750C'83

Ref. No.	BLOCK NO. E-6 DESCRIPTION	ENGINE SERIAL NUMBER FROM	TO	QTY REQ	PART NUMBER	HONDA CODE
1	SPROCKET, OIL PUMP DRIVE (26T) ...	-------	-------	1	15131-MB0-000	1241645
2	OUTER COMP., CLUTCH	-------	-------	1	22100-ME9-000	1373422
	OUTER COMP., CLUTCH	-------	-------	1	22100-MN2-000	2778900
3	GUIDE, CLUTCH OUTER	-------	-------	1	22116-MB0-000	1242536
4	SPACER, 8MM	-------	-------	1	22117-ME9-000	1368422
5	CENTER A, CLUTCH	-------	-------	1	22120-MB0-770	1291012
6	CENTER B, CLUTCH	-------	-------	1	22131-MB0-770	1291020
7	INNER, ONE WAY CLUTCH	-------	-------	1	22141-MB0-770	1291046
8	PLATE, SPRING SETTING	-------	-------	1	22151-MB0-770	1291053
9	DISK, CLUTCH FRICTION	-------	-------	4	22201-MB0-003	1242551
	DISK, CLUTCH FRICTION	-------	-------	4	22201-MM5-000	3143401
10	DISK, CLUTCH FRICTION	-------	-------	2	22201-ME9-000	1373430
	DISK A, CLUTCH FRICTION	-------	-------	2	22201-MG8-000	2012383
	DISK A, CLUTCH FRICTION	-------	-------	2	22201-MG8-010	2256410
11	PLATE, CLUTCH	-------	-------	5	22321-MG8-000	2045615
	PLATE B, CLUTCH	-------	-------	5	22321-283-000	0075705

© AMERICAN HONDA MOTOR CO. LTD. 1993

CONTENTS

TITLE	PAGE	GRID
AIR CLEANER	86	E8
ALTERNATOR	17	B8
BATTERY	84	E7
BRAKE CALIPER, FR	66	D10
BRAKE PANEL, RR	70	D12
BRAKE PEDAL	90	E10
CABLE	52	D3
CAM CHAIN	10	B6
CAMSHAFT	8	B4
CARBURETOR ASSY	41	C8
CARBURETOR COMPONENT	42	C9
CHANGE PEDAL	90	E10
CLUTCH	13	B6
CLUTCH MASTER CYLINDER	56	D5
CRANKCASE	26	C1
CRANKCASE COVER, L	17	B8
CRANKCASE COVER, R	11	B5
CRANKSHAFT	28	C2
CROSS SHAFT	38	C7
CYLINDER	4	B2
CYLINDER	6	B3
CYLINDER HEAD COVER	2	B1
CYLINDER HEAD, FR	4	B2
CYLINDER HEAD, RR	6	B3
FENDER, FR	62	D8
FENDER, RR	100	F3
FINAL DRIVEN GEAR	73	E1
FORK, FR	63	D8
FR BRAKE MASTER CYLINDER	54	D4
FRAME	110	F8
FUEL PUMP	84	E7
FUEL TANK	77	E3
GASKET KIT A	44	C10
GASKET KIT B	46	C11
GEARSHIFT DRUM	34	C5
HANDLEBAR	58	D6
HEADLIGHT	48	D1
HORN	80	D7
IGNITION COIL	106	F6
MUFFLER	88	E9
OIL FILTER	23	B11
OIL PUMP	23	B11
PISTON	28	C2
RADIATOR	108	F7
SEAT	80	E5
SHOCK ABSORBER	98	F2
SIDE COVER	82	E6
SPARK UNIT	100	F3
SPEEDOMETER	50	D2
STAND	94	E12
STARTING DRIVEN GEAR	16	B8
STARTING MOTOR	21	B10
STEERING STEM	60	D7
STEP	92	E11
SWINGARM	95	E12
SWITCH	52	D3
TACHOMETER	50	D2
TAILLIGHT	104	F5
TENSIONER	10	B5
THERMOSTAT	36	C6
TOOLS	112	F9
TOP BRIDGE	58	D6
TRANSMISSION	32	C4
TURN SIGNAL	102	F4
VALVE	8	B4
WATER PIPE	36	C6
WATER PUMP	19	B9
WHEEL, FR	66	D11
WHEEL, RR	72	E1
WIRE HARNESS	106	F6

GRID **B6**

CLUTCH

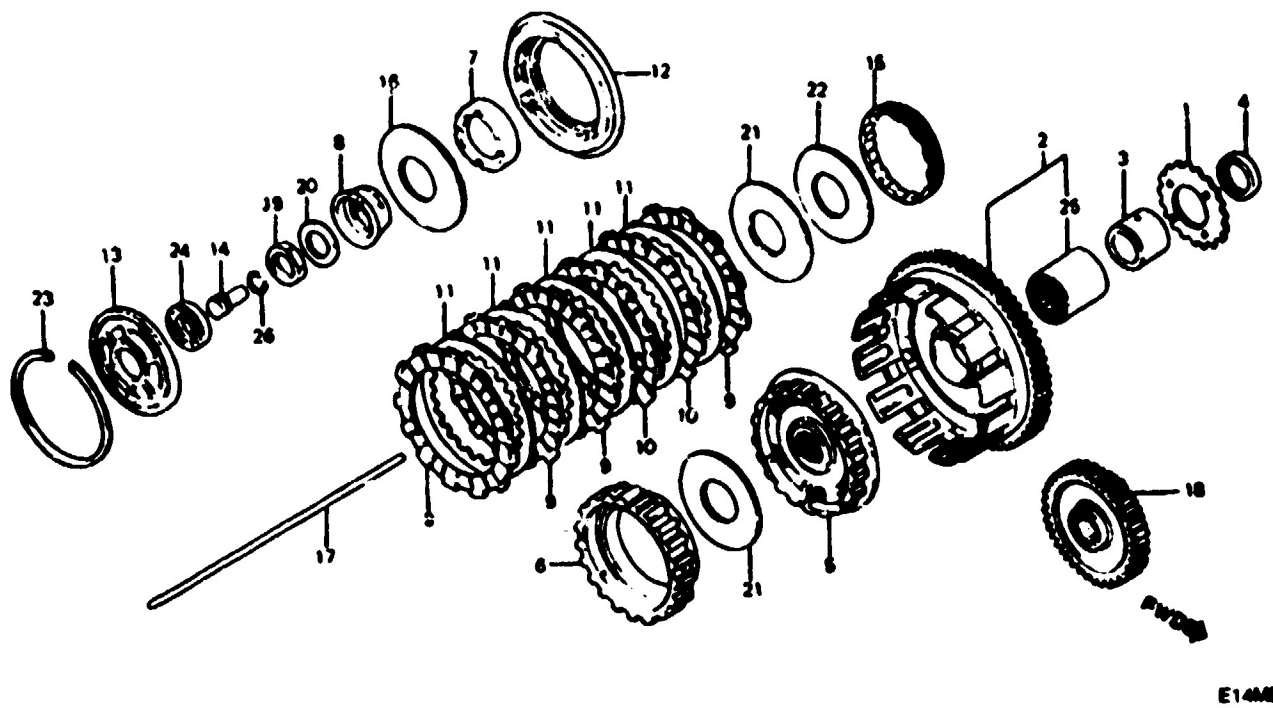

E14ME9008

Ref. No.	DESCRIPTION	ENGINE SERIAL NUMBER FROM	ENGINE SERIAL NUMBER TO	QTY REQ	PART NUMBER	HONDA CODE
	VT750C'83 BLOCK NO. E-6					
12	PLATE, CLUTCH PRESSURE	-------	2021755	1	22351-MB0-770	1291087
	PLATE, CLUTCH PRESSURE	2021756	-------	1	22351-MB0-771	1536077
13	PLATE, CLUTCH LIFTER	-------	-------	1	22352-MB0-770	1291095
14	PIECE, CLUTCH JOINT	-------	-------	1	22366-MB0-000	1242577
15	CLUTCH, ONE WAY	-------	-------	1	22425-MB0-772	1316603
16	SPRING, CLUTCH	-------	-------	1	22441-MB0-771	1291129
17	ROD, CLUTCH LIFTER	-------	-------	1	22850-ME9-000	1368430
18	GEAR, PRIMARY DRIVE	-------	-------	1	23103-ME9-000	1368489
19	NUT, LOCK, 22MM	-------	-------	1	90201-MB0-770	1375450
20	WASHER, SPRING, 22MM	-------	-------	1	90432-MB0-000	1243583
	WASHER, SPRING, 22MM	-------	-------	1	90432-MB0-010	2408615
21	WASHER, 44X85X1.6	-------	-------	2	90461-MB0-770	1292135
22	WASHER, 44X74X3.2	-------	-------	1	90462-MB0-770	1292143
23	CIRCLIP, INTERNAL, 95	-------	2021755	1	90601-MB0-770	1297142
	CIRCLIP, INTERNAL, 95	2021756	-------	1	90601-MB0-771	1536549
24	BEARING, RADIAL BALL, 16003	-------	-------	1	91008-KK6-000	2043123

© AMERICAN HONDA MOTOR CO., LTD. 1983

VT750C'83 ENGINE NO.; RC14E-2000051 TO 2022747
VT750C'83 FRAME NO.; RC140-DM000035 TO DM022807

VT750C'83

Ref. No.	BLOCK NO. E-6 DESCRIPTION	ENGINE SERIAL NUMBER FROM	TO	QTY REQ	PART NUMBER	HONDA CODE
24	BEARING, RADIAL BALL, 16003	-------	-------	1	91008-362-000	0334854
	BEARING, RADIAL BALL, 16003	-------	-------	1	91010-HC0-003	2519544
25	BEARING, NEEDLE, 35X42X30 (TOYO)	-------	-------	1	91024-MBC-003	1243807
	BEARING, NEEDLE, 35X42X30 (NIPPON)	-------	-------	1	91024-MB0-004	1243815
26	CLIP, PISTON PIN, 15MM	-------	-------	1	94601-15000	0156018

© AMERICAN HONDA MOTOR CO., LTD. 1983

CONTENTS

TITLE	PAGE	GRID
AIR CLEANER	86	E8
ALTERNATOR	17	B8
BATTERY	84	E7
BRAKE CALIPER, FR.	66	D10
BRAKE PANEL, RR.	70	D12
BRAKE PEDAL	90	E10
CABLE	52	D3
CAM CHAIN	10	B5
CAMSHAFT	8	B4
CARBURETOR ASSY	41	C8
CARBURETOR COMPONENT	42	C9
CHANGE PEDAL	90	E10
CLUTCH	13	B6
CLUTCH MASTER CYLINDER	56	D5
CRANKCASE	26	C1
CRANKCASE COVER, L.	17	B8
CRANKCASE COVER, R.	11	B5
CRANKSHAFT	28	C2
CROSS SHAFT	38	C7
CYLINDER	4	B2
CYLINDER	6	B3
CYLINDER HEAD COVER	2	B1
CYLINDER HEAD, FR.	4	B2
CYLINDER HEAD, RR.	6	B3
FENDER, FR.	62	D8
FENDER, RR.	100	F3
FINAL DRIVEN GEAR	73	E1
FORK, FR.	63	D8
FR. BRAKE MASTER CYLINDER	54	D4
FRAME	110	F8
FUEL PUMP	84	E7
FUEL TANK	77	E3
GASKET KIT A	44	C10
GASKET KIT B	46	C11
GEARSHIFT DRUM	34	C5
HANDLEBAR	58	D6
HEADLIGHT	48	D1
HORN	60	D7
IGNITION COIL	106	F6
MUFFLER	88	E9
OIL FILTER	23	B11
OIL PUMP	23	B11
PISTON	28	C2
RADIATOR	108	F7
SEAT	80	E5
SHOCK ABSORBER	98	F2
SIDE COVER	82	E6
SPARK UNIT	100	F3
SPEEDOMETER	50	D2
STAND	94	E12
STARTING DRIVEN GEAR	16	B8
STARTING MOTOR	21	B10
STEERING STEM	60	D7
STEP	92	E11
SWINGARM	95	E12
SWITCH	52	D3
TACHOMETER	50	D2
TAILLIGHT	104	F5
TENSIONER	10	B5
THERMOSTAT	36	C6
TOOLS	112	F9
TOP BRIDGE	58	D6
TRANSMISSION	32	C4
TURN SIGNAL	102	F4
VALVE	8	B4
WATER PIPE	36	C6
WATER PUMP	19	B9
WHEEL, FR.	68	D11
WHEEL, RR.	72	E1
WIRE HARNESS	106	F6

GRID **B7**

STARTING DRIVEN GEAR

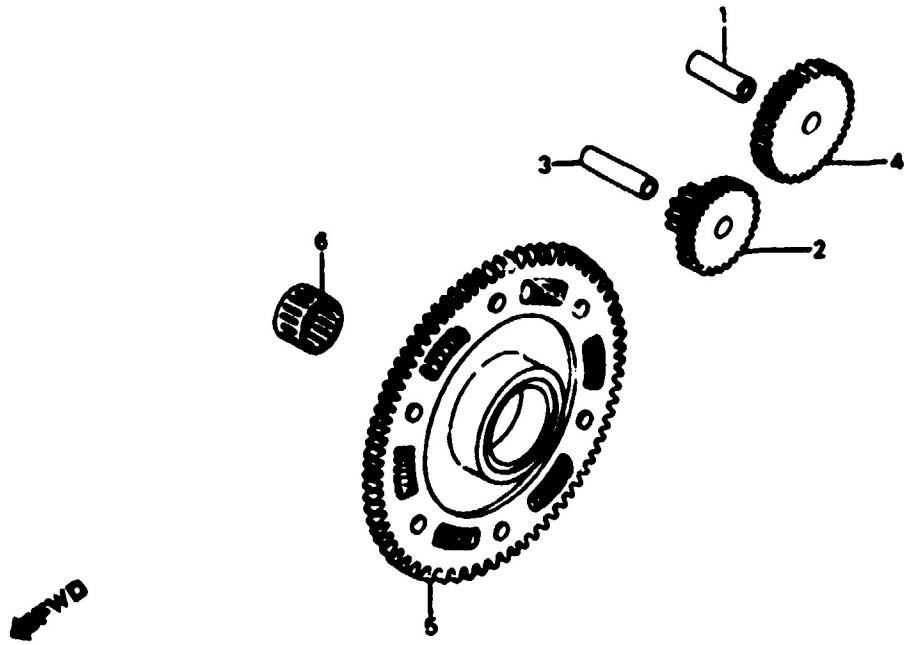

E14ME9007

Ref. No.	DESCRIPTION (BLOCK NO. E-7)	ENGINE SERIAL NUMBER FROM	ENGINE SERIAL NUMBER TO	QTY REQ	PART NUMBER	HONDA CODE
	VT750C'83					
1	PIN, PISTON, 10X33	-------	-------	1	13111-GK8-000	1709104
	PIN, PISTON	-------	-------	1	13111-GS7-000	2754323
	PIN, PISTON, 10X33	-------	-------	1	13111-122-000	0360024
2	GEAR A, STARTER REDUCTION	-------	2019423	1	28101-ME9-000	1368729
	GEAR A, STARTER REDUCTION	-------	-------	1	28101-ME9-010	1459080
3	PIN, 10X44	-------	-------	1	28102-ME9-000	1368737
4	GEAR, STARTER	-------	2019423	1	28106-ME9-000	1368745
	GEAR, STARTER (51T)	-------	-------	1	28106-ME9-010	1459098
5	GEAR COMP., STARTING DRIVEN	-------	-------	1	28110-ME9-000	1368752
	GEAR COMP., STARTING DRIVEN	-------	-------	1	28110-MG7-000	1536093
6	BEARING, NEEDLE, 32MM (TORRINGTON) .	-------	-------	1	91021-415-005	0670802

© AMERICAN HONDA MOTOR CO. LTD. 1983

VT750C'83 ENGINE NO.; RC14E-2000051 TO 2022747
VT750C'83 FRAME NO.; RC140-DM000035 TO DM022807

LEFT CRANKCASE COVER • ALTERNATOR

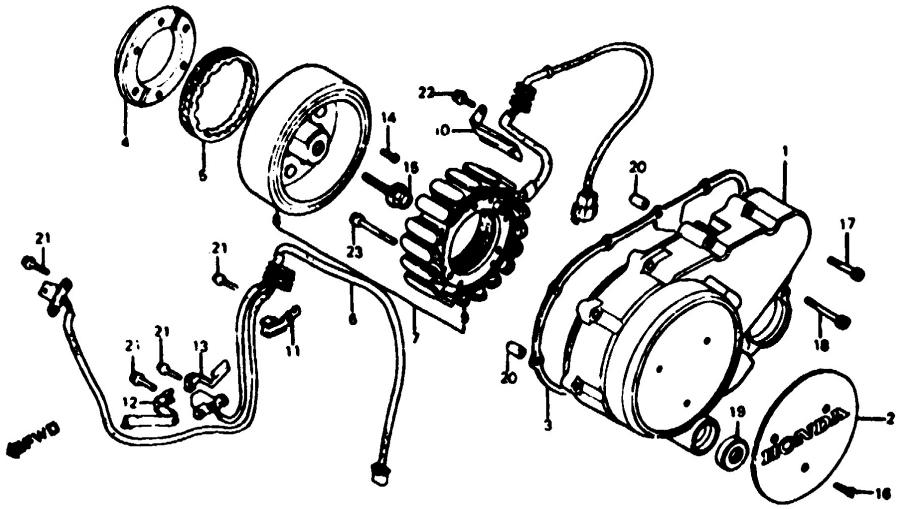

VT750C'83

BLOCK NO. E-8

Ref. No.	DESCRIPTION	ENGINE SERIAL NUMBER FROM	ENGINE SERIAL NUMBER TO	QTY REQ	PART NUMBER	HONDA CODE
1	COVER, L. CRANKCASE	-------	-------	1	11361-ME9-000	1366806
	COVER, L. CRANKCASE	-------	-------	1	11361-ME9-770	1562073
2	BASE, EMBLEM	-------	-------	1	11362-ME9-000	1366814
3	GASKET, L. COVER	-------	-------	1	11395-ME9-000	1366855
4	OUTER COMP., STARTING CLUTCH	-------	-------	1	28120-ME9-000	1368760
5	CLUTCH, STARTING ONE WAY	-------	-------	1	28125-ME9-003	1436021
	CLUTCH, STARTER ONE WAY	-------	-------	1	28125-ME9-013	1696640
6	ALTERNATOR ASSY., PULSE	-------	-------	1	30300-ME9-154	1521467
7	ALTERNATOR ASSY., FLYWHEEL TYPE A.C.	-------	-------	1	31100-ME9-005	1368885
8	FLYWHEEL COMP.	-------	-------	1	31110-ME9-005	1368893
9	STATOR COMP.	-------	-------	1	31120-ME9-005	1368901
10	CLAMP, ALTERNATOR CORD	-------	-------	1	32961-ME9-000	1369057
11	CLAMP, PULSE (A)	-------	-------	1	32962-ME9-000	1369065
12	CLAMP, PULSE (B)	-------	-------	1	32963-ME9-000	1369073
13	CLAMP, PULSE (C)	-------	-------	1	32964-ME9-000	1369081

© AMERICAN HONDA MOTOR CO. LTD. 1983

CONTENTS

TITLE	PAGE	GRID
AIR CLEANER	86	E8
ALTERNATOR	17	B8
BATTERY	84	E7
BRAKE CALIPER, FR.	66	D10
BRAKE PANEL, RR.	70	D12
BRAKE PEDAL	90	E10
CABLE	52	D3
CAM CHAIN	10	B5
CAMSHAFT	8	B4
CARBURETOR ASSY.	41	C8
CARBURETOR COMPONENT	42	C9
CHANGE PEDAL	90	E10
CLUTCH	13	B6
CLUTCH MASTER CYLINDER	56	D5
CRANKCASE	26	C1
CRANKCASE COVER, L.	17	B8
CRANKCASE COVER, R.	11	B5
CRANKSHAFT	28	C2
CROSS SHAFT	38	C7
CYLINDER	4	B2
CYLINDER	6	B3
CYLINDER HEAD COVER	2	B1
CYLINDER HEAD, FR.	4	B2
CYLINDER HEAD, RR.	6	B3
FENDER, FR.	62	D8
FENDER, RR.	100	F3
FINAL DRIVEN GEAR	73	E1
FORK, FR.	63	D8
FR. BRAKE MASTER CYLINDER	54	D4
FRAME	110	F8
FUEL PUMP	84	E7
FUEL TANK	77	E3
GASKET KIT A	44	C10
GASKET KIT B	46	C11
GEARSHIFT DRUM	34	C5
HANDLEBAR	58	D6
HEADLIGHT	48	D1
HORN	60	D7
IGNITION COIL	106	F6
MUFFLER	86	E9
OIL FILTER	23	B11
OIL PUMP	23	B11
PISTON	28	C2
RADIATOR	108	F7
SEAT	80	E5
SHOCK ABSORBER	98	F2
SIDE COVER	82	E6
SPARK UNIT	100	F3
SPEEDOMETER	50	D2
STAND	94	E12
STARTING DRIVEN GEAR	16	B8
STARTING MOTOR	21	B10
STEERING STEM	60	D7
STEP	92	E11
SWINGARM	95	E12
SWITCH	52	D3
TACHOMETER	50	D2
TAILLIGHT	104	F5
TENSIONER	10	B5
THERMOSTAT	36	C6
TOOLS	112	F9
TOP BRIDGE	58	D6
TRANSMISSION	32	C4
TURN SIGNAL	102	F4
VALVE	8	B4
WATER PIPE	36	C6
WATER PUMP	19	B9
WHEEL, FR.	68	D11
WHEEL, RR.	72	E1
WIRE HARNESS	106	F6

GRID **B8**

LEFT CRANKCASE COVER • ALTERNATOR

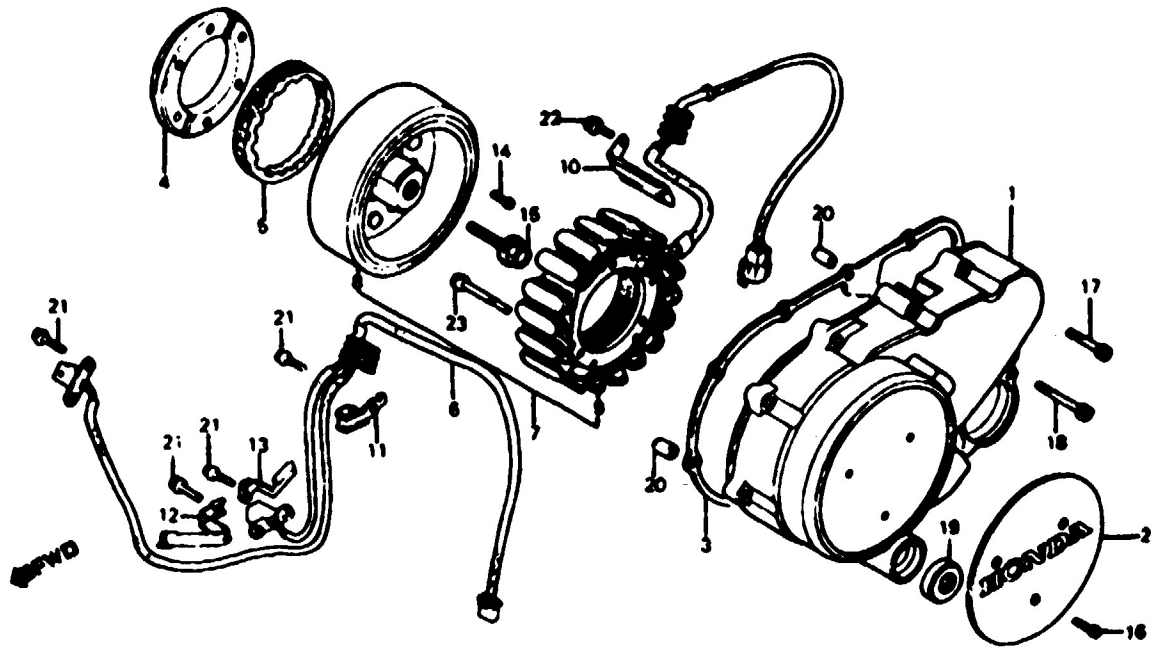

E14ME9008

VT750C'83

Ref. No.	DESCRIPTION (BLOCK NO. E-8)	ENGINE SERIAL NUMBER FROM	ENGINE SERIAL NUMBER TO	QTY REQ	PART NUMBER	HONDA CODE
14	BOLT, SOCKET, 8MM	-------	-------	6	90010-KE5-000	1824176
	BOLT, SOCKET, 8MM	-------	-------	6	90010-ME9-000	1370873
15	BOLT, FLANGE, 12X40	-------	-------	1	90025-ME9-000	1370907
	BOLT, FLANGE, 12X45	-------	-------	1	90025-ME9-010	1536465
	BOLT, FLANGE, 12X40	-------	-------	1	90025-MF5-000	1543503
16	BOLT, SOCKET, 4X10	-------	-------	3	90073-ME9-000	1373463
17	BOLT, SOCKET, 6X35	-------	-------	6	90074-ME9-000	1414655
18	BOLT, SOCKET, 6X50	-------	-------	3	90076-ME9-000	1414671
19	OIL SEAL, 12.5X25X8 (ARAI)	-------	-------	1	91204-425-003	1067024
20	PIN A, DOWEL, 8X14	-------	-------	2	94301-08140	0069310
21	BOLT, FLANGE, 6X20	-------	-------	4	95700-06020-00	0488684
	BOLT, FLANGE, 6X20	-------	-------	4	95701-06020-00	2105815
22	BOLT, FLANGE, 6X12	-------	-------	1	96000-06012-00	0823666
	BOLT, FLANGE, 6X12	-------	-------	1	96001-06012-00	2105930
23	BOLT, FLANGE, 6X40	-------	-------	3	96000-06040-00	0782870
	BOLT, FLANGE, 6X40	-------	-------	3	96001-06040-00	2106037

© AMERICAN HONDA MOTOR CO., LTD. 1993

VT750C'83 ENGINE NO.; RC14E-2000051 TO 2022747
VT750C'83 FRAME NO.; RC140-DM000035 TO DM022807

WATER PUMP

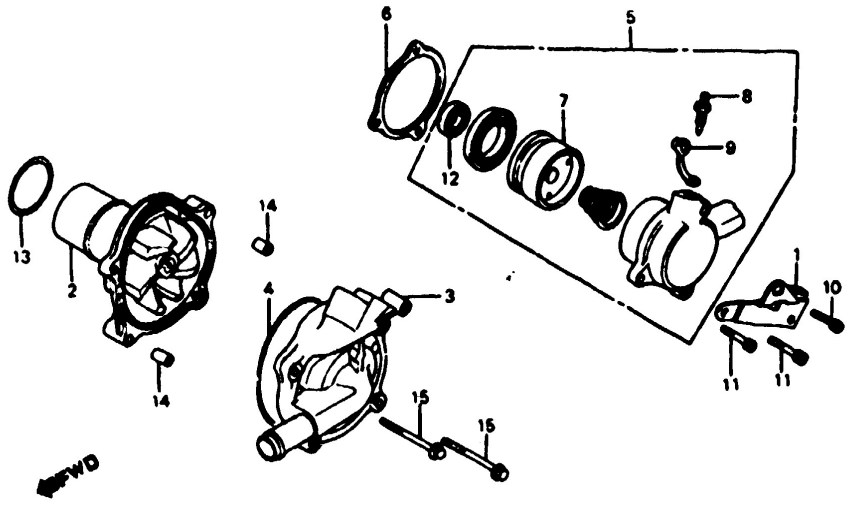

E14ME9009

VT750C'83

BLOCK NO. E-9

Ref. No.	DESCRIPTION	ENGINE SERIAL NUMBER FROM	ENGINE SERIAL NUMBER TO	QTY REQ	PART NUMBER	HONDA CODE
1	STAY, RR. COVER	-------	-------	1	11342-ME9-000	1366780
2	PUMP COMP., WATER	-------	-------	1	19200-ME9-000	1368158
	PUMP COMP., WATER	-------	-------	1	19200-ME9-010	2054062
	PUMP COMP., WATER	-------	-------	1	19200-ME9-020	3189644
	PUMP COMP., WATER	-------	-------	1	19200-ME9-030	3826260
3	COVER, WATER PUMP	-------	-------	1	19221-ME9-000	1368166
4	GASKET, WATER PUMP COVER	-------	-------	1	19226-ME9-000	1368174
5	CYLINDER ASSY., CLUTCH SLAVE	-------	-------	1	22860-ME9-000	1368448
6	INSULATOR, CLUTCH SLAVE CYLINDER	-------	-------	1	22862-MB0-000	1242619
7	PISTON, SLAVE CYLINDER	-------	-------	1	22863-MB0-003	1242627
8	SCREW, BLEEDER	-------	-------	1	43352-568-003	0505735
9	CAP, BLEEDER SCREW	-------	-------	1	43353-461-771	0954230
10	BOLT, SOCKET, 6X15	-------	-------	1	90071-ME9-000	1373471
11	BOLT, SOCKET, 6X25	-------	-------	2	90077-ME9-000	1521491
12	OIL SEAL, 8X18X5	-------	-------	1	91202-MB0-000	1373489
13	O-RING, 32.95X2.62 (ARAI)	-------	-------	1	91302-MB0-013	1435114

© AMERICAN HONDA MOTOR CO., LTD. 1983

CONTENTS

TITLE	PAGE	GRID
AIR CLEANER	86	E8
ALTERNATOR	17	B8
BATTERY	84	E7
BRAKE CALIPER, FR.	66	D10
BRAKE PANEL, RR.	70	D12
BRAKE PEDAL	90	E10
CABLE	52	D3
CAM CHAIN	10	B5
CAMSHAFT	8	B4
CARBURETOR ASSY.	41	C8
CARBURETOR COMPONENT	42	C9
CHANGE PEDAL	90	E10
CLUTCH	13	B6
CLUTCH MASTER CYLINDER	56	D5
CRANKCASE	26	C1
CRANKCASE COVER, L.	17	B8
CRANKCASE COVER, R.	11	B5
CRANKSHAFT	28	C2
CROSS SHAFT	31	C7
CYLINDER	4	B2
CYLINDER	6	B3
CYLINDER HEAD COVER	2	B1
CYLINDER HEAD, FR.	4	B2
CYLINDER HEAD, RR.	6	B3
FENDER, FR.	62	D8
FENDER, RR.	100	F3
FINAL DRIVEN GEAR	73	E1
FORK, FR.	63	D8
FR. BRAKE MASTER CYLINDER	54	D4
FRAME	110	F8
FUEL PUMP	84	E7
FUEL TANK	77	E3
GASKET KIT A	44	C10
GASKET KIT B	46	C11
GEARSHIFT DRUM	34	C5
HANDLEBAR	58	D6
HEADLIGHT	48	D1
HORN	60	D7
IGNITION COIL	106	F6
MUFFLER	88	E9
OIL FILTER	23	B11
OIL PUMP	23	B11
PISTON	28	C2
RADIATOR	108	F7
SEAT	80	E5
SHOCK ABSORBER	98	F2
SIDE COVER	82	E6
SPARK UNIT	100	F3
SPEEDOMETER	50	D2
STAND	94	E12
STARTING DRIVEN GEAR	16	B8
STARTING MOTOR	21	B10
STEERING STEM	60	D7
STEP	92	E11
SWINGARM	95	E12
SWITCH	52	D3
TACHOMETER	50	D2
TAILLIGHT	104	F5
TENSIONER	10	B5
THERMOSTAT	36	C6
TOOLS	112	F9
TOP BRIDGE	58	D6
TRANSMISSION	32	C4
TURN SIGNAL	102	F4
VALVE	8	B4
WATER PIPE	36	C6
WATER PUMP	19	B3
WHEEL, FR.	68	D11
WHEEL, RR.	72	E1
WIRE HARNESS	106	F6

GRID **B9**

WATER PUMP

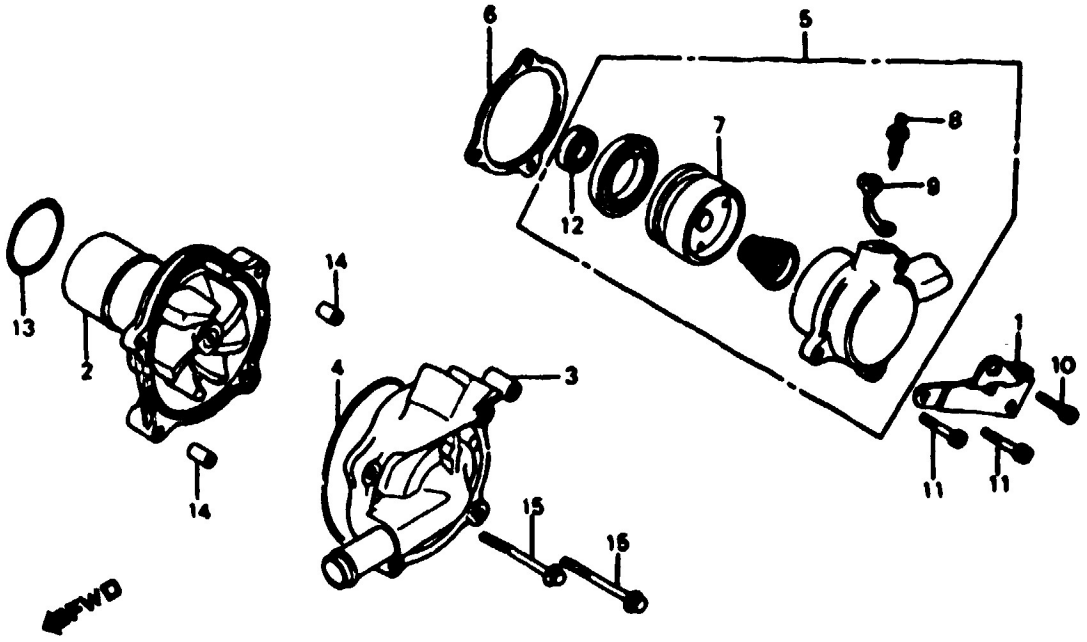

E14ME9009

VT750C'83

Ref. No.	BLOCK NO. E-9 DESCRIPTION	ENGINE SERIAL NUMBER FROM	TO	QTY REQ	PART NUMBER	HONDA CODE
14	PIN A, DOWEL, 8X14	-------	-------	2	94301-08140	0069310
15	BOLT, FLANGE, 6X25	-------	-------	2	96000-06025-00	0782862
	BOLT, FLANGE, 6X25	-------	-------	2	96001-06025-00	2105989
NI	SPRING, SLAVE CYLINDER	-------	-------	1	22864-MB0-003	1242635
	CUP, PISTON	-------	-------	1	22[illegible]-MB0-003	1242643

© AMERICAN HONDA MOTOR CO. LTD. 1983

VT750C'83 ENGINE NO.; RC14E-2000051 TO 2022747
VT750C'83 FRAME NO.; RC140-DM000035 TO DM022807

STARTING MOTOR

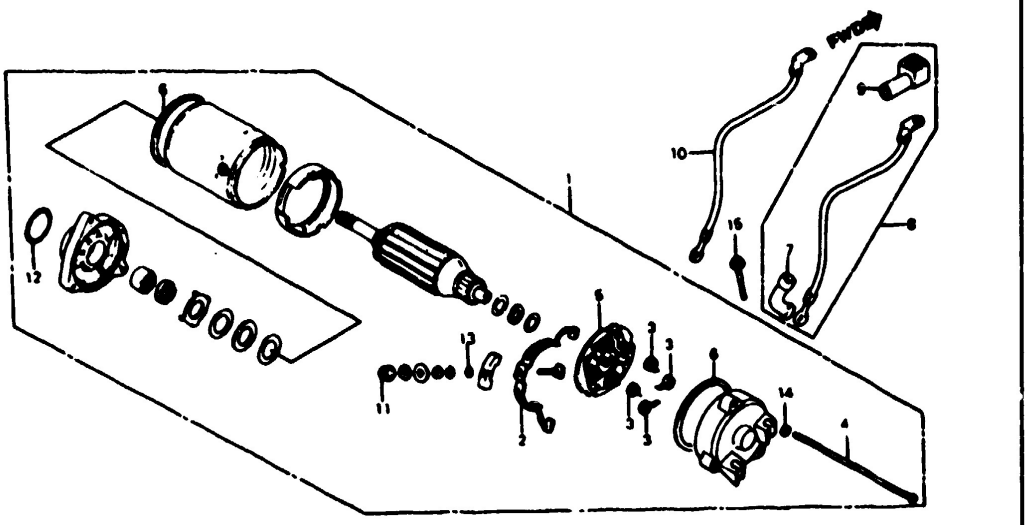

E14ME9010

VT750C'83

Ref. No.	DESCRIPTION	ENGINE SERIAL NUMBER FROM	ENGINE SERIAL NUMBER TO	QTY REQ	PART NUMBER	HONDA CODE
	BLOCK NO. E-10					
1	MOTOR ASSY., STARTING	-------	-------	1	31200-ME9-008	1436039
	MOTOR ASSY., STARTER	-------	-------	1	31200-MK7-405	4184347
2	TERMINAL SET, BRUSH	-------	-------	1	31201-ME9-000	1373497
3	SPRING, CARBON BRUSH	-------	-------	4	31204-MA6-000	1243161
4	BOLT, SETTING	-------	-------	3	31205-ME9-780	1368927
5	HOLDER SET, BRUSH	-------	-------	1	31206-MC8-008	1234681
6	RING, SEAL	-------	-------	2	31207-179-711	1063858
7	COVER, STARTING MOTOR TERMINAL	-------	-------	1	32411-230-000	0208652
	COVER, STARTING MOTOR TERMINAL	-------	-------	1	32411-253-000	0177360
8	CABLE, STARTING MOTOR	-------	-------	1	32412-ME9-000	1369008
9	COVER B, MAGNETIC SWITCH	-------	-------	1	32416-460-000	0832105
10	CABLE, BATTERY GROUND	-------	-------	1	32601-ME9-000	1369040
11	NUT-WASHER, 6MM	-------	-------	1	90071-MB0-000	1243534
12	O-RING, 24.4X3.1 (ARAI)	-------	-------	1	91309-425-C03	1113422
	O-RING, 24.4X3.1	-------	-------	1	91312-MG7-003	2618221
13	O-RING	-------	-------	1	91320-MB0-000	1292184

© AMERICAN HONDA MOTOR CO., LTD. 1993

CONTENTS

TITLE	PAGE	GRID
AIR CLEANER	86	E8
ALTERNATOR	17	B8
BATTERY	84	E7
BRAKE CALIPER, FR.	66	D10
BRAKE PANEL, RR.	70	D12
BRAKE PEDAL	90	E10
CABLE	52	D3
CAM CHAIN	10	B5
CAMSHAFT	8	B4
CARBURETOR ASSY.	41	C8
CARBURETOR COMPONENT	42	C9
CHANGE PEDAL	90	E10
CLUTCH	13	B6
CLUTCH MASTER CYLINDER	56	D6
CRANKCASE	26	C1
CRANKCASE COVER, L.	17	B8
CRANKCASE COVER, R.	11	B5
CRANKSHAFT	28	C2
CROSS SHAFT	38	C7
CYLINDER	4	B2
CYLINDER	6	B3
CYLINDER HEAD COVER	2	B1
CYLINDER HEAD, FR.	4	B2
CYLINDER HEAD, RR.	6	B3
FENDER, FR.	62	D8
FENDER, RR.	100	F3
FINAL DRIVEN GEAR	73	E1
FORK, FR.	63	D8
FR. BRAKE MASTER CYLINDER	54	D4
FRAME	110	F8
FUEL PUMP	84	E7
FUEL TANK	77	E3
GASKET KIT A	44	C10
GASKET KIT B	46	C11
GEARSHIFT DRUM	34	C5
HANDLEBAR	58	D6
HEADLIGHT	48	D1
HORN	60	D7
IGNITION COIL	106	F6
MUFFLER	88	E9
OIL FILTER	23	B11
OIL PUMP	23	B11
PISTON	28	C2
RADIATOR	108	F7
SEAT	80	E5
SHOCK ABSORBER	98	F2
SIDE COVER	82	E8
SPARK UNIT	100	F3
SPEEDOMETER	50	D2
STAND	94	E12
STARTING DRIVEN GEAR	16	B8
STARTING MOTOR	21	B10
STEERING STEM	60	D7
STEP	92	E11
SWINGARM	95	E12
SWITCH	52	D3
TACHOMETER	50	D2
TAILLIGHT	104	F5
TENSIONER	10	B5
THERMOSTAT	36	C8
TOOLS	112	F9
TOP BRIDGE	58	D6
TRANSMISSION	32	C4
TURN SIGNAL	102	F4
VALVE	8	B4
WATER PIPE	36	C8
WATER PUMP	19	B9
WHEEL, FR.	68	D11
WHEEL, RR.	72	E1
WIRE HARNESS	106	F8

GRID **B10**

STARTING MOTOR

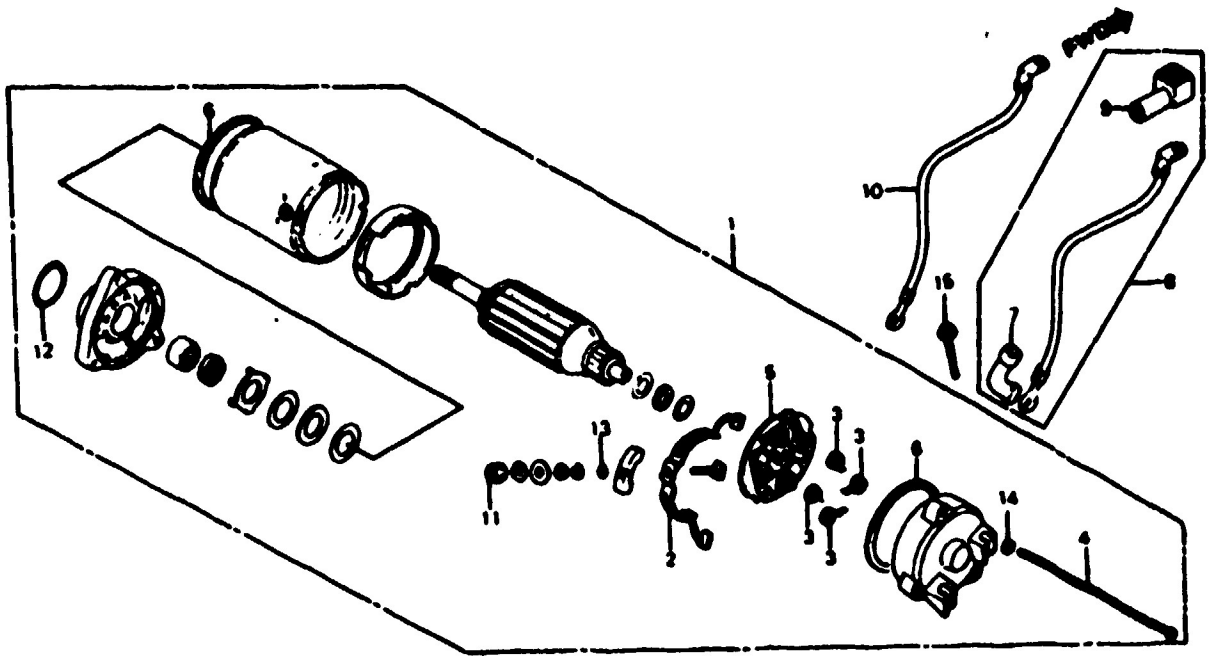

E14ME9010

VT750C'83

Ref. No.	DESCRIPTION	BLOCK NO. E-10 ENGINE SERIAL NUMBER FROM	TO	QTY REQ	PART NUMBER	HONDA CODE
14	WASHER, SPRING, 5MM	-------	-------	3	94111-05000	0058966
15	BOLT, FLANGE, 6X32	-------	-------	2	95700-06032-07	1113570
	BOLT, FLANGE, 6X32	-------	-------	2	95701-06032-07	2387116

© AMERICAN HONDA MOTOR CO. LTD. 1983

VT750C'83 ENGINE NO.; RC14E-2000051 TO 2022747
VT750C'83 FRAME NO.; RC140-DM000035 TO DM022807

OIL PUMP • OIL FILTER

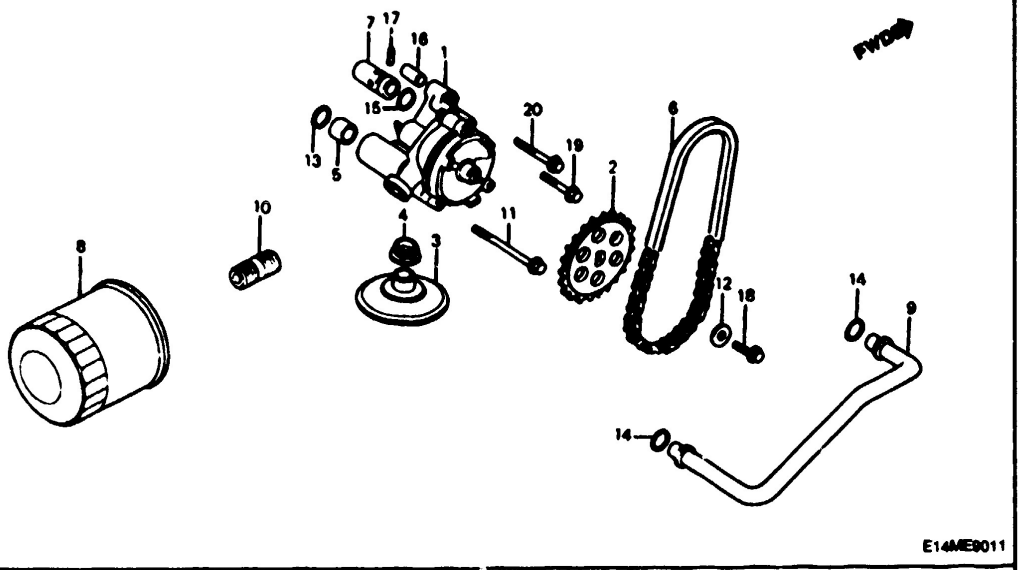

VT750C'83

Ref. No.	DESCRIPTION (BLOCK NO. E-11)	ENGINE SERIAL NUMBER FROM	ENGINE SERIAL NUMBER TO	QTY REQ	PART NUMBER	HONDA CODE
1	PUMP ASSY., OIL	-------	-------	1	15100-ME9-000	1367408
	PUMP ASSY., OIL	-------	-------	1	15100-ME9-770	1562081
2	SPROCKET, OIL PUMP DRIVEN	-------	-------	1	15134-MB0-000	1241652
	SPROCKET, OIL PUMP DRIVEN (25T)	-------	-------	1	15134-MB0-010	1780964
3	STRAINER, OIL	-------	-------	1	15153-425-000	0716183
4	GASKET, OIL STRAINER	-------	-------	1	15154-425-000	0716191
5	COLLAR, O-RING	-------	-------	1	15155-300-000	0190363
6	CHAIN, OIL PUMP	-------	-------	1	15161-ME5-003	1326651
7	VALVE ASSY., RELIEF	-------	-------	1	15220-MB0-010	1416064
8	FILTER, OIL (TOKYO)	-------	-------	1	15400-679-013	0801597
	FILTER, OIL	-------	-------	1	15400-679-023	1384445
	FILTER, OIL	-------	-------	1	15410-MB0-000	1395417
	FILTER, OIL	-------	-------	1	15410-MB0-003	1241702
	CARTRIDGE, OIL FILTER	-------	-------	1	15410-MB3-003	1811058
	FILTER, OIL	-------	-------	1	15410-MJ0-003	1689611
	FILTER, OIL	-------	-------	1	15410-MJ0-004	3481355

© AMERICAN HONDA MOTOR CO., LTD. 1983

CONTENTS

TITLE	PAGE	GRID
AIR CLEANER	86	E8
ALTERNATOR	17	B8
BATTERY	84	E7
BRAKE CALIPER, FR	66	D10
BRAKE PANEL, RR	70	D12
BRAKE PEDAL	90	E10
CABLE	52	D3
CAM CHAIN	10	B5
CAMSHAFT	8	B4
CARBURETOR ASSY.	41	C8
CARBURETOR COMPONENT	42	C9
CHANGE PEDAL	90	E10
CLUTCH	13	B6
CLUTCH MASTER CYLINDER	56	D5
CRANKCASE	26	C1
CRANKCASE COVER, L	17	B8
CRANKCASE COVER, R	11	B5
CRANKSHAFT	28	C2
CROSS SHAFT	38	C7
CYLINDER	4	B2
CYLINDER	6	B3
CYLINDER HEAD COVER	2	B1
CYLINDER HEAD, FR	4	B2
CYLINDER HEAD, RR	6	B3
FENDER, FR	62	D8
FENDER, RR	100	F3
FINAL DRIVEN GEAR	73	E1
FORK, FR	63	D8
FR. BRAKE MASTER CYLINDER	54	D4
FRAME	110	F8
FUEL PUMP	84	E7
FUEL TANK	77	E3
GASKET KIT A	44	C10
GASKET KIT B	46	C11
GEARSHIFT DRUM	34	C5
HANDLEBAR	58	D6
HEADLIGHT	48	D1
HORN	60	D7
IGNITION COIL	106	F6
MUFFLER	88	E9
OIL FILTER	23	B11
OIL PUMP	23	B11
PISTON	28	C2
RADIATOR	108	F7
SEAT	80	E5
SHOCK ABSORBER	98	F2
SIDE COVER	82	E8
SPARK UNIT	100	F3
SPEEDOMETER	50	D2
STAND	94	E12
STARTING DRIVEN GEAR	16	B8
STARTING MOTOR	21	B10
STEERING STEM	60	D7
STEP	92	E11
SWINGARM	95	E12
SWITCH	52	D3
TACHOMETER	50	D2
TAILLIGHT	104	F5
TENSIONER	10	B5
THERMOSTAT	36	C6
TOOLS	112	F9
TOP BRIDGE	58	D6
TRANSMISSION	32	C4
TURN SIGNAL	102	F4
VALVE	8	B4
WATER PIPE	36	C6
WATER PUMP	19	B9
WHEEL, FR	68	D11
WHEEL, RR	72	E1
WIRE HARNESS	106	F6

GRID **B11**

OIL PUMP • OIL FILTER

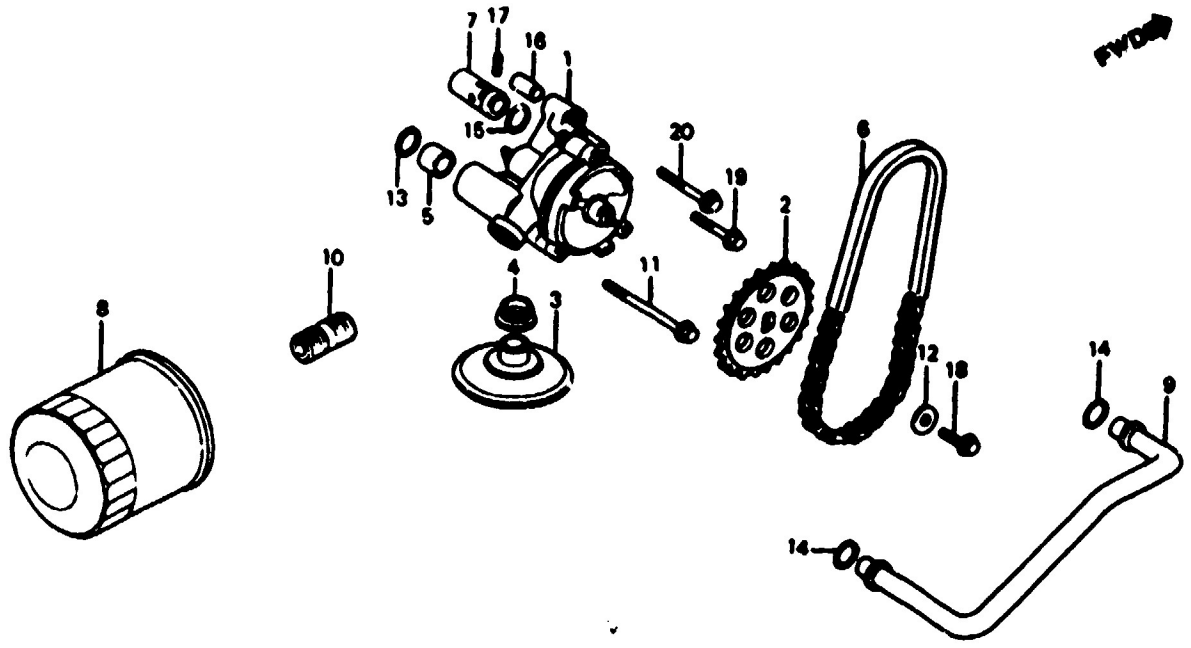

E14ME9011

Ref. No.	DESCRIPTION	ENGINE SERIAL NUMBER FROM	ENGINE SERIAL NUMBER TO	QTY REQ	PART NUMBER	HONDA CODE
	VT750C'83 BLOCK NO. E-11					
9	PIPE, OIL	-------	-------	1	15511-ME9-000	1367440
10	BOSS, OIL FILTER	-------	-------	1	90019-MB0-000	1243435
11	BOLT, FLANGE, 6X75	-------	-------	1	90052-ME9-000	1536481
12	WASHER, SHIFT DRUM STOPPER	-------	-------	1	90487-MB0-000	1243666
13	O-RING, 13.8X2.5	-------	-------	1	91303-MG7-003	2995447
	O-RING, 13.8X2.5	-------	-------	1	91303-377-000	0499525
	O-RING, 13.8X2.5	-------	-------	1	91303-426-000	1113372
14	O-RING, 14.6X3.7 (ARAI)	-------	-------	2	91309-MB0-003	1260843
15	O-RING, 14.7X2.2 (ARAI)	-------	-------	1	91313-MB0-003	1260868
	O-RING, 14.8X2.2	-------	-------	1	91313-MG7-004	3353620
16	PIN A, DOWEL, 8X14	-------	-------	1	94301-08140	0069310
17	PIN, SPRING, 3X16	-------	-------	1	94305-30162	0786871
18	BOLT, FLANGE, 6X14	-------	-------	1	95700-06014-08	0840587
	BOLT, FLANGE, 6X14	-------	-------	1	95701-06014-08	2374742
19	BOLT, FLANGE, 6X32	-------	-------	1	96000-06032-00	0807347
	BOLT, FLANGE, 6X32	-------	-------	1	96001-06032-00	2106029

© AMERICAN HONDA MOTOR CO. LTD. 1983

VT750C'83 ENGINE NO.; RC14E-2000051 TO 2022747
VT750C'83 FRAME NO.; RC140-DM000035 TO DM022807

VT750C'83					
Ref. No.	BLOCK NO. E-11 DESCRIPTION	ENGINE SERIAL NUMBER FROM	TO	QTY REQ	PART NUMBER	HONDA CODE
20	BOLT, FLANGE, 6X40	-------	-------	1	96000-06040-00	0782870
	BOLT, FLANGE, 6X40	-------	-------	1	96001-06040-00	2106037

© AMERICAN HONDA MOTOR CO., LTD. 1993

CONTENTS

TITLE	PAGE	GRID
AIR CLEANER	86	E8
ALTERNATOR	17	B8
BATTERY	84	E7
BRAKE CALIPER, FR.	66	D10
BRAKE PANEL, RR.	70	D12
BRAKE PEDAL	90	E10
CABLE	52	D3
CAM CHAIN	10	B5
CAMSHAFT	8	B4
CARBURETOR ASSY.	41	C8
CARBURETOR COMPONENT	42	C9
CHANGE PEDAL	90	E10
CLUTCH	13	B6
CLUTCH MASTER CYLINDER	56	D5
CRANKCASE	26	C1
CRANKCASE COVER, L.	17	B8
CRANKCASE COVER, R.	11	B5
CRANKSHAFT	28	C2
CROSS SHAFT	38	C7
CYLINDER	4	B2
CYLINDER	6	B3
CYLINDER HEAD COVER	2	B1
CYLINDER HEAD, FR.	4	B2
CYLINDER HEAD, RR.	6	B3
FENDER, FR.	62	D8
FENDER, RR.	100	F3
FINAL DRIVEN GEAR	73	E1
FORK, FR.	63	D8
FR. BRAKE MASTER CYLINDER	54	D4
FRAME	110	F8
FUEL PUMP	84	E7
FUEL TANK	77	E3
GASKET KIT A	44	C10
GASKET KIT B	46	C11
GEARSHIFT DRUM	34	C5
HANDLEBAR	58	D6
HEADLIGHT	48	D1
HORN	60	D7
IGNITION COIL	106	F6
MUFFLER	88	E9
OIL FILTER	23	B11
OIL PUMP	23	B11
PISTON	28	C2
RADIATOR	108	F7
SEAT	80	E5
SHOCK ABSORBER	98	F2
SIDE COVER	82	E6
SPARK UNIT	100	F3
SPEEDOMETER	50	D2
STAND	94	E12
STARTING DRIVEN GEAR	16	B8
STARTING MOTOR	21	B10
STEERING STEM	60	D7
STEP	92	E11
SWINGARM	95	E12
SWITCH	52	D3
TACHOMETER	50	D2
TAILLIGHT	104	F5
TENSIONER	10	B5
THERMOSTAT	36	C6
TOOLS	112	F9
TOP BRIDGE	58	D6
TRANSMISSION	32	C4
TURN SIGNAL	102	F4
VALVE	8	B4
WATER PIPE	36	C6
WATER PUMP	19	B9
WHEEL, FR.	68	D11
WHEEL, RR.	72	E1
WIRE HARNESS	106	F6

CRANKCASE

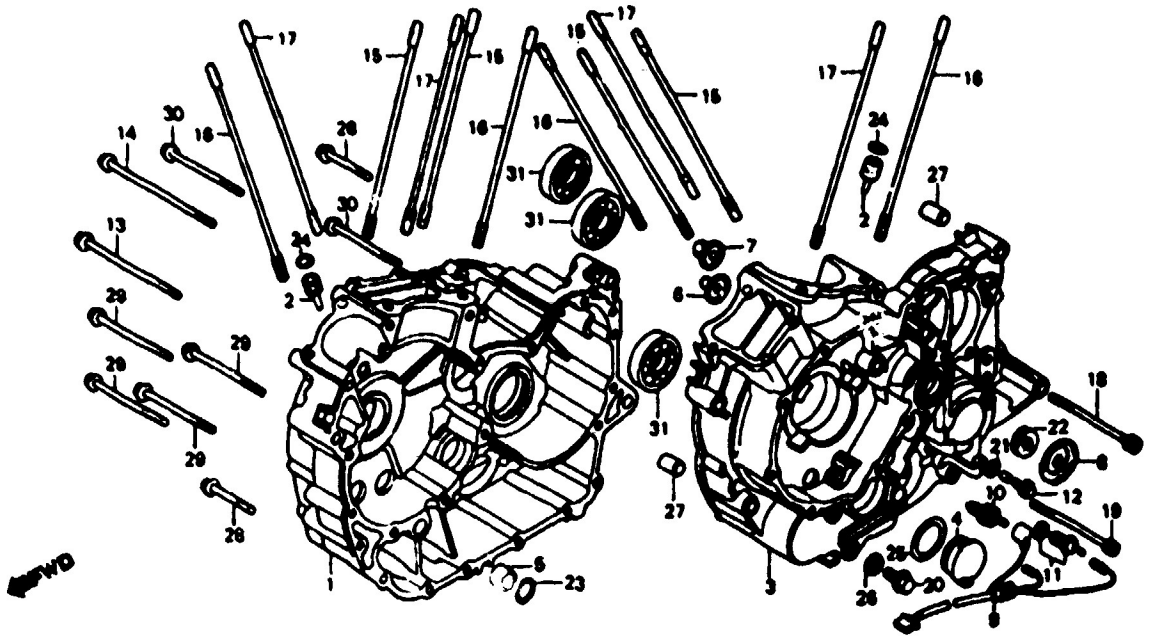

E14ME9012

Ref. No.	DESCRIPTION	ENGINE SERIAL NUMBER FROM	ENGINE SERIAL NUMBER TO	QTY REQ	PART NUMBER	HONDA CODE
	VT750C'83 BLOCK NO. E-12					
1	CRANKCASE COMP., R.	-------	-------	1	11100-ME9-000	1535392
2	JET, OIL	-------	-------	2	11146-ME9-000	1366749
3	CRANKCASE COMP., L.	-------	-------	1	11200-ME9-000	1535400
4	PLUG, L. CRANKCASE	-------	-------	1	11211-ME9-010	1982982
5	COLLAR, O-RING	-------	-------	1	15155-300-000	0190363
6	GUIDE, LIFTER ROD	-------	-------	1	15171-ME9-000	1367416
7	PLATE, ORIFICE	-------	-------	1	15172-ME9-000	1367424
8	PLATE, SETTING	-------	-------	1	22851-ME9-000	1373505
9	HARNESS A, SUB WIRE	-------	-------	1	32101-ME9-000	1368968
10	SWITCH ASSY., OIL PRESSURE	-------	-------	1	35500-MB9-004	1087204
	SWITCH ASSY., OIL PRESSURE	-------	-------	1	35500-MJ0-004	1734599
	SWITCH ASSY., OIL PRESSURE	-------	-------	1	35500-MJ4-004	1851955
	SWITCH ASSY., OIL PRESSURE (ND)	-------	-------	1	35500-MJ4-014	1876721
	SWITCH ASSY., OIL PRESSURE (ND)	-------	-------	1	35500-MJ4-024	3544608
11	SWITCH ASSY., NEUTRAL	-------	-------	2	35600-425-003	0759290
	SWITCH ASSY., NEUTRAL	-------	-------	2	35600-425-013	2287415

© AMERICAN HONDA MOTOR CO., LTD. 1983

VT750C'83 ENGINE NO.; RC14E-2000051 TO 2022747
VT750C'83 FRAME NO.; RC140-DM000035 TO DM022807

VT750C'83

Ref. No.	BLOCK NO. E-12 DESCRIPTION	ENGINE SERIAL NUMBER FROM	TO	QTY REQ	PART NUMBER	HONDA CODE
11	SWITCH ASSY., NEUTRAL	-------	-------	2	35600-425-023	2533677
12	BOLT, ORIFICE, 1.6MM	-------	-------	1	90001-ME9-000	1370840
13	BOLT, FLANGE, 8X120	-------	-------	2	90005-ME9-000	1370857
14	BOLT, FLANGE, 8X135	-------	-------	1	90006-ME9-000	1370865
15	BOLT, STUD, 8X252	-------	-------	4	90011-ME9-003	1373513
16	BOLT, STUD, 10X264	-------	-------	4	90012-ME9-003	1370881
17	BOLT, STUD, 10X255	-------	-------	4	90013-ME9-003	1370899
18	BOLT, SOCKET, 8X120	-------	-------	1	90053-ME9-000	1536499
19	BOLT, SOCKET, 8X105	-------	-------	1	90055-ME9-000	1536507
20	BOLT, PLUG, 14MM	-------	-------	1	90081-MC7-000	1210681
21	WASHER, SEALING, 6MM	-------	-------	1	90441-706-000	0163600
22	OIL SEAL, 8X25X8	-------	-------	1	91204-MB0-000	1243856
	OIL SEAL, 8X25X8	-------	-------	1	91204-MB0-003	1331099
	OIL SEAL, 8X25X8 (ARAI)	-------	-------	1	91204-MB0-013	2952943
23	O-RING, 13.8X2.5	-------	-------	1	91303-MG7-003	2995447
	O-RING, 13.8X2.5	-------	-------	1	91303-377-000	0499525
	O-RING, 13.8X2.5	-------	-------	1	91303-426-000	1113372
24	O-RING, 5X1.7 (ARAI)	-------	-------	2	91305-MG7-003	2023901
	O-RING, 5X1.7	-------	-------	2	91305-333-000	0294769
25	O-RING, 35X3	-------	-------	1	91351-689-000	0737395
26	WASHER, DRAIN PLUG, 14MM	-------	-------	1	94109-14000	0171876
27	PIN A, DOWEL, 14X20	-------	-------	2	94301-14200	0295626
28	BOLT, FLANGE, 8X45	-------	-------	3	95700-08045-07	1268556
	BOLT, FLANGE, 8X45	-------	-------	3	95701-08045-07	2411031
29	BOLT, FLANGE, 8X80	-------	-------	5	95700-08080-07	1371236
	BOLT, FLANGE, 8X80	-------	-------	5	95701-08080-07	2867117
30	BOLT, FLANGE, 8X100	-------	-------	2	95700-08100-07	1113638
31	BEARING, RADIAL BALL, 6304	-------	-------	3	96100-63040-00	0341644

© AMERICAN HONDA MOTOR CO., LTD. 1983

CONTENTS

TITLE	PAGE	GRID
AIR CLEANER	86	E8
ALTERNATOR	17	B6
BATTERY	84	E7
BRAKE CALIPER, FR.	66	D10
BRAKE PANEL, RR.	70	D12
BRAKE PEDAL	90	E10
CABLE	52	D3
CAM CHAIN	10	B5
CAMSHAFT	8	B4
CARBURETOR ASSY.	41	C8
CARBURETOR COMPONENT	42	C9
CHANGE PEDAL	90	E10
CLUTCH	13	B6
CLUTCH MASTER CYLINDER	56	D5
CRANKCASE	26	C1
CRANKCASE COVER, L	17	B6
CRANKCASE COVER, R.	11	B5
CRANKSHAFT	28	C2
CROSS SHAFT	38	C7
CYLINDER	4	B2
CYLINDER	6	B3
CYLINDER HEAD COVER	2	B1
CYLINDER HEAD, FR.	4	B2
CYLINDER HEAD, RR.	6	B3
FENDER, FR.	62	D6
FENDER, RR.	100	F3
FINAL DRIVEN GEAR	73	E1
FORK, FR.	63	D6
FR. BRAKE MASTER CYLINDER	54	D4
FRAME	110	F8
FUEL PUMP	84	E7
FUEL TANK	77	E3
GASKET KIT A	44	C10
GASKET KIT B	46	C11
GEARSHIFT DRUM	34	C5
HANDLEBAR	58	D6
HEADLIGHT	48	D1
HORN	60	D7
IGNITION COIL	106	F6
MUFFLER	88	E9
OIL FILTER	23	B11
OIL PUMP	23	B11
PISTON	28	C2
RADIATOR	108	F7
SEAT	80	E5
SHOCK ABSORBER	98	F2
SIDE COVER	82	E6
SPARK UNIT	100	F3
SPEEDOMETER	50	D2
STAND	94	E12
STARTING DRIVEN GEAR	16	B8
STARTING MOTOR	21	B10
STEERING STEM	60	D7
STEP	92	E11
SWINGARM	95	E12
SWITCH	52	D3
TACHOMETER	50	D2
TAILLIGHT	104	F5
TENSIONER	10	B5
THERMOSTAT	36	C6
TOOLS	112	F9
TOP BRIDGE	58	D6
TRANSMISSION	32	C4
TURN SIGNAL	102	F4
VALVE	8	B4
WATER PIPE	36	C6
WATER PUMP	19	B9
WHEEL, FR.	68	D11
WHEEL, RR.	72	E1
WIRE HARNESS	106	F6

GRID **C1**

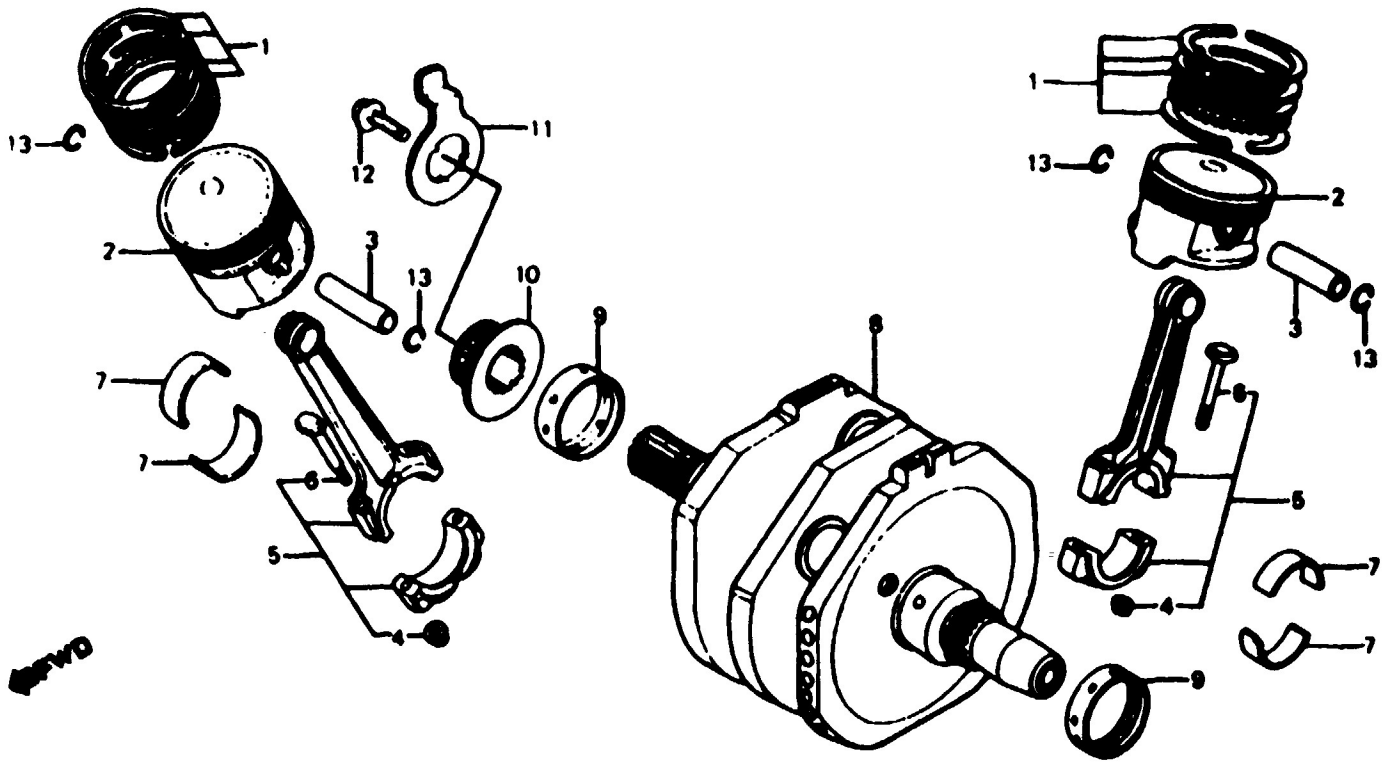

Connecting rod bearing selection

(Oil clearance 28~52μm)

Crank pin O D 43@ / Connecting rod I D 46@		A	B
		- 0.010 - 0.018	- 0.018 - 0.026
1	0 + 0.008	F (Pink)	E (Yellow)
2	+ 0.008 + 0.016	E (Yellow)	D (Green)

E14ME8013T

 © AMERICAN HONDA MOTOR CO. LTD. 1983

VT7>0C '83 ENGINE NO.; RC14E-2000051 TO 2022747
VT750C '83 FRAME NO.; RC140-DM000035 TO DM022807

PISTON • CRANKSHAFT

Crankshaft bearing selection

(Oil clearance 25~41μm)

Crankcase I.D 540 \ Crankshaft I.D 500	1	2
	0 -0.008	-0.008 -0.016
0 +0.010	13327-ME9-305 (Blown)	13326-ME9-305 (Black)
+0.010 +0.020	13326-ME9-305 (Black)	13325-ME9-305 (Blue)

E14ME9013 C

VT750C'83

BLOCK NO. E-13

Ref. No.	DESCRIPTION	ENGINE SERIAL NUMBER FROM	ENGINE SERIAL NUMBER TO	QTY REQ	PART NUMBER	HONDA CODE
1	RING SET, PISTON (STD.) (RIKEN)	-------	-------	2	13011-ME9-004	1367036
	RING SET, PISTON (STD.)	-------	-------	2	13011-ME9-005	1367044
	RING SET, PISTON (0.25) (RIKEN)	-------	-------	(2)	13021-ME9-004	1367051
	RING SET, PISTON (0.25)	-------	-------	(2)	13021-ME9-005	1367069
	RING SET, PISTON (0.50) (RIKEN)	-------	-------	(2)	13031-ME9-004	1367077
	RING SET, PISTON (0.50)	-------	-------	(2)	13031-ME9-005	1367085
2	PISTON	-------	-------	2	13101-ME9-000	1367093
	PISTON	-------	-------	2	13101-ML5-000	2825628
	PISTON (0.25)	-------	-------	(2)	13102-ME9-000	1367101
	PISTON (0.25)	-------	-------	(2)	13102-ML5-000	2825644
	PISTON (0.50)	-------	-------	(2)	13103-ME9-000	1367119
	PISTON (0.50)	-------	-------	(2)	13103-ML5-000	2825669
3	PIN, PISTON	-------	-------	2	13111-ME9-000	1367127
4	NUT, CONNECTING ROD	-------	-------	4	13205-ME2-000	1269067
5	ROD ASSY., CONNECTING	-------	-------	2	13210-ME9-000	1367135
6	BOLT, CONNECTING ROD	-------	-------	4	13213-ME2-000	1269083

© AMERICAN HONDA MOTOR CO., LTD 1983

CONTENTS

TITLE	PAGE	GRID
AIR CLEANER	86	E8
ALTERNATOR	17	B8
BATTERY	84	E7
BRAKE CALIPER, FR.	66	D10
BRAKE PANEL, RR.	70	D12
BRAKE PEDAL	90	E10
CABLE	52	D3
CAM CHAIN	10	B5
CAMSHAFT	8	B4
CARBURETOR ASSY.	41	C8
CARBURETOR COMPONENT	42	C9
CHANGE PEDAL	90	E10
CLUTCH	13	B6
CLUTCH MASTER CYLINDER	56	D5
CRANKCASE	26	C1
CRANKCASE COVER, L.	17	B8
CRANKCASE COVER, R.	11	B5
CRANKSHAFT	28	C2
CROSS SHAFT	38	C7
CYLINDER	4	B2
CYLINDER	6	B3
CYLINDER HEAD COVER	2	B1
CYLINDER HEAD, FR.	4	B2
CYLINDER HEAD, RR.	6	B3
FENDER, FR.	62	D8
FENDER, RR.	100	F3
FINAL DRIVEN GEAR	73	E1
FORK, FR.	63	D8
FR. BRAKE MASTER CYLINDER	54	D4
FRAME	110	F8
FUEL PUMP	84	E7
FUEL TANK	77	E3
GASKET KIT A	44	C10
GASKET KIT B	46	C11
GEARSHIFT DRUM	34	C5
HANDLEBAR	58	D6
HEADLIGHT	48	D1
HORN	60	D7
IGNITION COIL	106	F6
MUFFLER	88	E9
OIL FILTER	23	B11
OIL PUMP	23	B11
PISTON	28	C2
RADIATOR	108	F7
SEAT	80	E5
SHOCK ABSORBER	98	F2
SIDE COVER	82	E6
SPARK UNIT	100	F3
SPEEDOMETER	50	D2
STAND	94	E12
STARTING DRIVEN GEAR	16	B6
STARTING MOTOR	21	B10
STEERING STEM	60	D7
STEP	92	E11
SWINGARM	95	E12
SWITCH	52	D3
TACHOMETER	50	D2
TAILLIGHT	104	F5
TENSIONER	10	B5
THERMOSTAT	36	C6
TOOLS	112	F9
TOP BRIDGE	58	D6
TRANSMISSION	32	C4
TURN SIGNAL	102	F4
VALVE	8	B4
WATER PIPE	36	C6
WATER PUMP	19	B9
WHEEL, FR.	68	D11
WHEEL, RR.	72	E1
WIRE HARNESS	106	F6

GRID C2

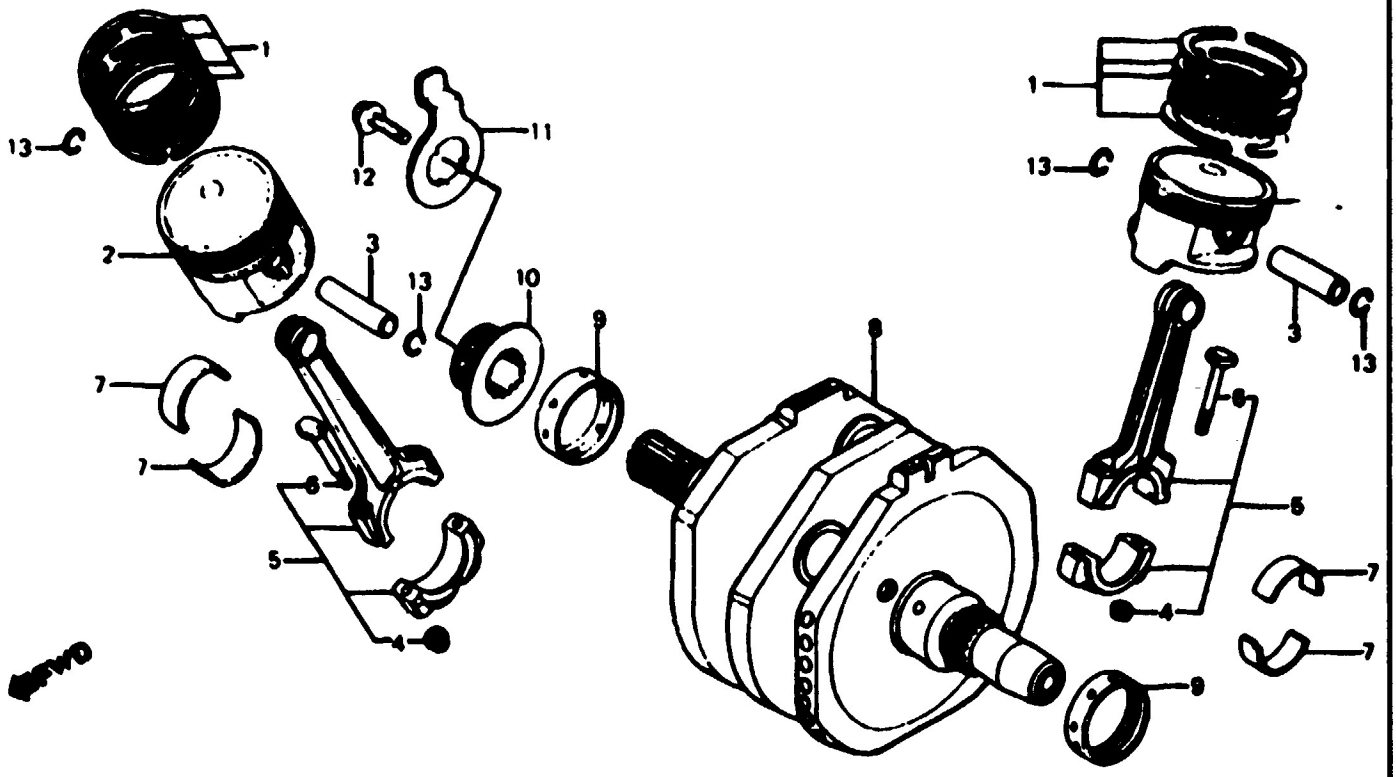

Connecting rod bearing selection

(Oil clearance 28~52μm)

Crank pin O D 43B / Connecting rod I D 48B		A	B
		-0.010 -0.018	-0.018 -0.026
1	0 +0.008	F (Pink)	E (Yellow)
2	+0.008 +0.016	E (Yellow)	D (Green)

E14ME9013T

 © AMERICAN HONDA MOTOR CO., LTD. 1983

VT750C'83 ENGINE NO.; RC14E-2000051 TO 2022747
VT750C'83 FRAME NO.; RC140-DM000035 TO DM022807

VT750C'83

BLOCK NO. E-13

Ref. No.	DESCRIPTION	ENGINE SERIAL NUMBER FROM	ENGINE SERIAL NUMBER TO	QTY REQ	PART NUMBER	HONDA CODE
7	BEARING D, CONNECTING ROD (GREEN)	-------	-------	4	13218-ME9-003	1367143
	BEARING E, CONNECTING ROD (YELLOW)	-------	-------	4	13219-ME9-003	1367150
	BEARING F, CONNECTING ROD (PINK)	-------	-------	4	13220-ME9-003	1367168
8	CRANKSHAFT COMP.	-------	-------	1	13300-ME9-000	1367176
	CRANKSHAFT COMP.	-------	-------	1	13300-ME9-780	2099422
9	BEARING A, MAIN (BLUE)	-------	-------	2	13325-ME9-305	1414556
	BEARING B, MAIN (BLACK)	-------	-------	2	13326-ME9-305	1414564
	BEARING C, MAIN (BROWN)	-------	-------	2	13327-ME9-305	1414572
10	SPROCKET, CAM CHAIN DRIVE	-------	-------	1	14311-ME9-000	1367218
11	PLATE, PULSER	-------	-------	1	23105-ME9-000	1368497
12	BOLT, UBS, 12X28	-------	-------	1	90013-415-000	0670588
13	CLIP, PISTON PIN, 1.2X20	-------	-------	4	90601-KA5-000	1028398

© AMERICAN HONDA MOTOR CO., LTD. 1983

CONTENTS

TITLE	PAGE	GRID
AIR CLEANER	86	E8
ALTERNATOR	17	B8
BATTERY	84	E7
BRAKE CALIPER, FR.	66	D10
BRAKE PANEL, RR.	70	D12
BRAKE PEDAL	90	E10
CABLE	52	D3
CAM CHAIN	10	B5
CAMSHAFT	8	B4
CARBURETOR ASSY	41	C8
CARBURETOR COMPONENT	42	C9
CHANGE PEDAL	90	E10
CLUTCH	13	B6
CLUTCH MASTER CYLINDER	56	D6
CRANKCASE	26	C1
CRANKCASE COVER, L.	17	B8
CRANKCASE COVER, R.	11	B5
CRANKSHAFT	28	C2
CROSS SHAFT	36	C7
CYLINDER	4	B2
CYLINDER	6	B3
CYLINDER HEAD COVER	2	B1
CYLINDER HEAD, FR.	4	B2
CYLINDER HEAD, RR.	6	B3
FENDER, FR.	62	D8
FENDER, RR.	100	F3
FINAL DRIVEN GEAR	73	E1
FORK, FR.	63	D8
FR. BRAKE MASTER CYLINDER	54	D4
FRAME	110	F8
FUEL PUMP	84	E7
FUEL TANK	77	E3
GASKET KIT A	44	C10
GASKET KIT B	46	C11
GEARSHIFT DRUM	34	C5
HANDLEBAR	58	D6
HEADLIGHT	48	D1
HORN	60	D7
IGNITION COIL	106	F6
MUFFLER	88	E9
OIL FILTER	23	B11
OIL PUMP	23	B11
PISTON	28	C2
RADIATOR	108	F7
SEAT	80	E5
SHOCK ABSORBER	98	F2
SIDE COVER	82	E6
SPARK UNIT	100	F3
SPEEDOMETER	50	D2
STAND	94	E12
STARTING DRIVEN GEAR	16	B8
STARTING MOTOR	21	B10
STEERING STEM	60	D7
STEP	92	E11
SWINGARM	95	E12
SWITCH	52	D3
TACHOMETER	50	D2
TAILLIGHT	104	F5
TENSIONER	10	B5
THERMOSTAT	36	C6
TOOLS	112	F9
TOP BRIDGE	58	D6
TRANSMISSION	32	C4
TURN SIGNAL	102	F4
VALVE	8	B4
WATER PIPE	36	C6
WATER PUMP	19	B9
WHEEL, FR.	66	D11
WHEEL, RR.	72	E1
WIRE HARNESS	106	F6

GRID **C3**

TRANSMISSION

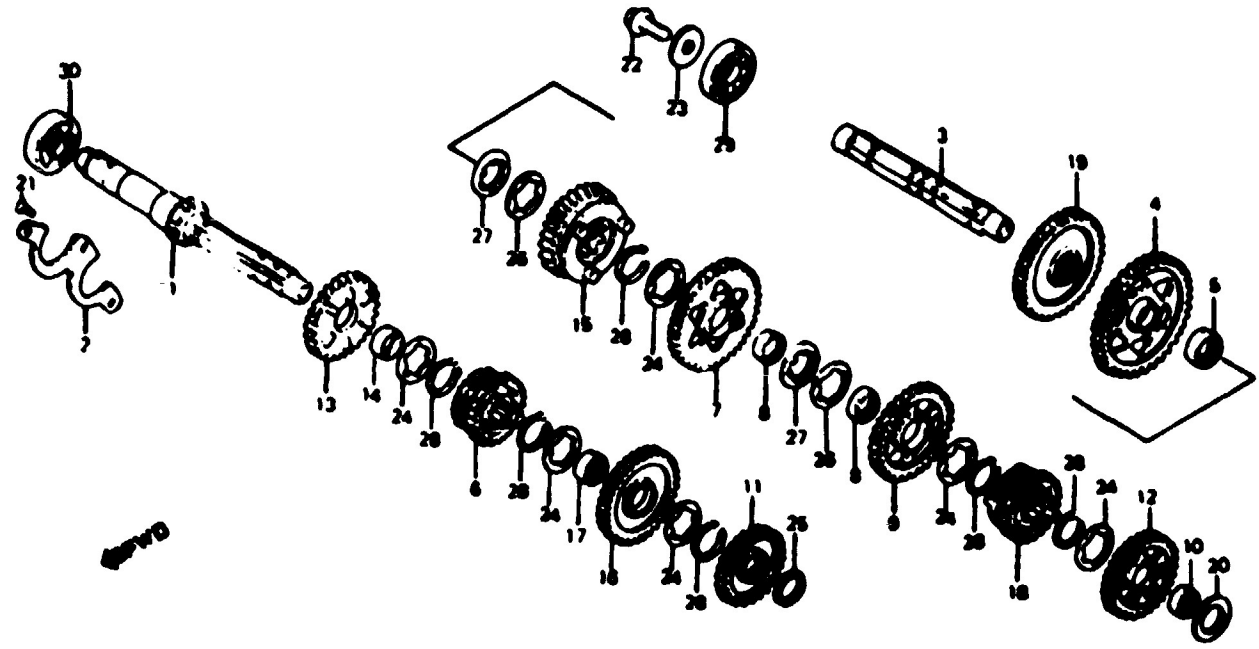

E14ME8014

VT750C'83

BLOCK NO. E-14

Ref. No.	DESCRIPTION	ENGINE SERIAL NUMBER FROM	ENGINE SERIAL NUMBER TO	QTY REQ	PART NUMBER	HONDA CODE
1	MAINSHAFT, TRANSMISSION (17T) ...	-------	-------	1	23211-ME9-000	1368513
2	PLATE, BEARING SETTING	-------	-------	1	23212-ME9-000	1368521
3	COUNTERSHAFT, TRANSMISSION	-------	-------	1	23221-ME9-000	1368539
4	GEAR, COUNTERSHAFT FIRST (39T) ..	-------	-------	1	23421-ME9-000	1368547
5	COLLAR, SPLINE, 25X28X10.8	-------	-------	1	23422-ME9-000	1368554
6	GEAR, MAINSHAFT SECOND & THIRD (21T/24T)	-------	2019423	1	23431-MB0-000	1242718
	GEAR, MAINSHAFT SECOND & THIRD (21T/24T)	-------	-------	1	23431-MB0-010	1372390
7	GEAR, COUNTERSHAFT SECOND (34T) .	-------	-------	1	23441-MB0-000	1242726
8	COLLAR, SPLINE, 25X9.5	-------	-------	2	23442-MB0-000	1242734
9	GEAR, COUNTERSHAFT THIRD (31T) ..	-------	-------	1	23461-MB0-000	1242742
10	COLLAR, 25X10	-------	-------	1	23462-MB0-000	1242759
11	GEAR, MAINSHAFT FOURTH (27T)	-------	-------	1	23471-MB0-000	1242767
12	GEAR, COUNTERSHAFT FOURTH (29T) .	-------	-------	1	23481-MB0-000	1242775
13	GEAR, MAINSHAFT FIFTH (29T)	-------	-------	1	23491-MB0-000	1242783

© AMERICAN HONDA MOTOR CO. LTD. 1983

VT750C'83 ENGINE NO.; RC14E-2000051 TO 2022747
VT750C'83 FRAME NO.; RC140-DM000035 TO DM022R07

VT750C '83

BLOCK NO. E-14

Ref. No.	DESCRIPTION	ENGINE SERIAL NUMBER FROM	ENGINE SERIAL NUMBER TO	QTY REQ	PART NUMBER	HONDA CODE
14	COLLAR, 25X12	-------	-------	1	23495-MB0-000	1242791
15	GEAR, COUNTERSHAFT FIFTH (26T) ..	-------	2019423	1	23501-MB0-000	1242809
	GEAR, COUNTERSHAFT FIFTH (26T) ..	-------	2019423	1	23501-MB0-010	1457696
		-------	-------	1	23501-MB0-010	1457696
	GEAR, COUNTERSHAFT FIFTH (26T) ..	-------	2019423	1	23501-MN0-000	2525541
		-------	-------	1	23501-MN0-000	2525541
16	GEAR, MAINSHAFT SIXTH (32T)	-------	-------	1	23511-MB0-000	1242817
17*	COLLAR, SPLINE, 25X12.5	-------	-------	1	23512-MB0-000	1242825
18	GEAR, COUNTERSHAFT SIXTH (24T) ..	-------	2019423	1	23521-MB0-000	1242833
	GEAR, COUNTERSHAFT SIXTH (24T) ..	-------	-------	1	23521-MB0-010	1372416
19	GEAR, FINAL DRIVE (36T)	-------	-------	1	23725-ME9-000	1368588
20	PLATE A, THRUST	-------	-------	1	23901-567-010	1510254
21	SCREW, FLAT, 6X16	-------	-------	3	90022-ME9-000	1393123
22	BOLT, SPECIAL, 10MM	-------	-------	1	90038-ME9-000	1521483
23	WASHER, 10MM	-------	-------	1	90409-952-000	0748129
24	WASHER, THRUST, 25X34	-------	-------	6	90452-371-000	0409136
25	WASHER, THRUST, 20X1.00	-------	-------	1	90454-428-000	0684902
26	WASHER B, THRUST, 25MM	-------	-------	2	90461-286-000	0172460
27	WASHER, LOCK, 25MM	-------	-------	2	90462-323-000	0255257
28	CIRCLIP, 25MM	-------	-------	6	90601-3[illegible]-000	0193482
29	BEARING, RADIAL BALL, 6304	-------	-------	1	96100-63040-00	0341644
30	BEARING, RADIAL BALL, 6305	-------	-------	1	96100-63050-00	0674408

© AMERICAN HONDA MOTOR CO., LTD. 1983

CONTENTS

TITLE	PAGE	GRID
AIR CLEANER	86	E8
ALTERNATOR	17	B8
BATTERY	84	E7
BRAKE CALIPER, FR.	66	D10
BRAKE PANEL, RR.	70	D12
BRAKE PEDAL	90	E10
CABLE	52	D3
CAM CHAIN	10	B5
CAMSHAFT	8	B4
CARBURETOR ASSY.	41	C8
CARBURETOR COMPONENT	42	C9
CHANGE PEDAL	90	E10
CLUTCH	13	B6
CLUTCH MASTER CYLINDER	56	D5
CRANKCASE	26	C1
CRANKCASE COVER, L.	17	B8
CRANKCASE COVER, R.	11	B5
CRANKSHAFT	28	C2
CROSS SHAFT	38	C7
CYLINDER	4	B2
CYLINDER	6	B3
CYLINDER HEAD COVER	2	B1
CYLINDER HEAD, FR.	4	B2
CYLINDER HEAD, RR.	6	B3
FENDER, FR.	62	D8
FENDER, RR.	100	F3
FINAL DRIVEN GEAR	73	E1
FORK, FR.	63	D8
FR. BRAKE MASTER CYLINDER	54	D4
FRAME	110	F8
FUEL PUMP	84	E7
FUEL TANK	77	E3
GASKET KIT A	44	C10
GASKET KIT B	46	C11
GEARSHIFT DRUM	34	C5
HANDLEBAR	58	D6
HEADLIGHT	48	D1
HORN	60	D7
IGNITION COIL	106	F6
MUFFLER	88	E9
OIL FILTER	23	B11
OIL PUMP	23	B11
PISTON	28	C2
RADIATOR	108	F7
SEAT	80	E5
SHOCK ABSORBER	98	F2
SIDE COVER	82	E6
SPARK UNIT	100	F3
SPEEDOMETER	50	D2
STAND	94	E12
STARTING DRIVEN GEAR	16	B8
STARTING MOTOR	21	B10
STEERING STEM	60	D7
STEP	92	E11
SWINGARM	95	E12
SWITCH	52	D3
TACHOMETER	50	D2
TAILLIGHT	104	F5
TENSIONER	10	B5
THERMOSTAT	36	C6
TOOLS	112	F9
TOP BRIDGE	58	D6
TRANSMISSION	32	C4
TURN SIGNAL	102	F4
VALVE	8	B4
WATER PIPE	36	C6
WATER PUMP	19	B9
WHEEL, FR.	68	D11
WHEEL, RR.	72	E1
WIRE HARNESS	106	F6

GRID **C4**

GEARSHIFT DRUM

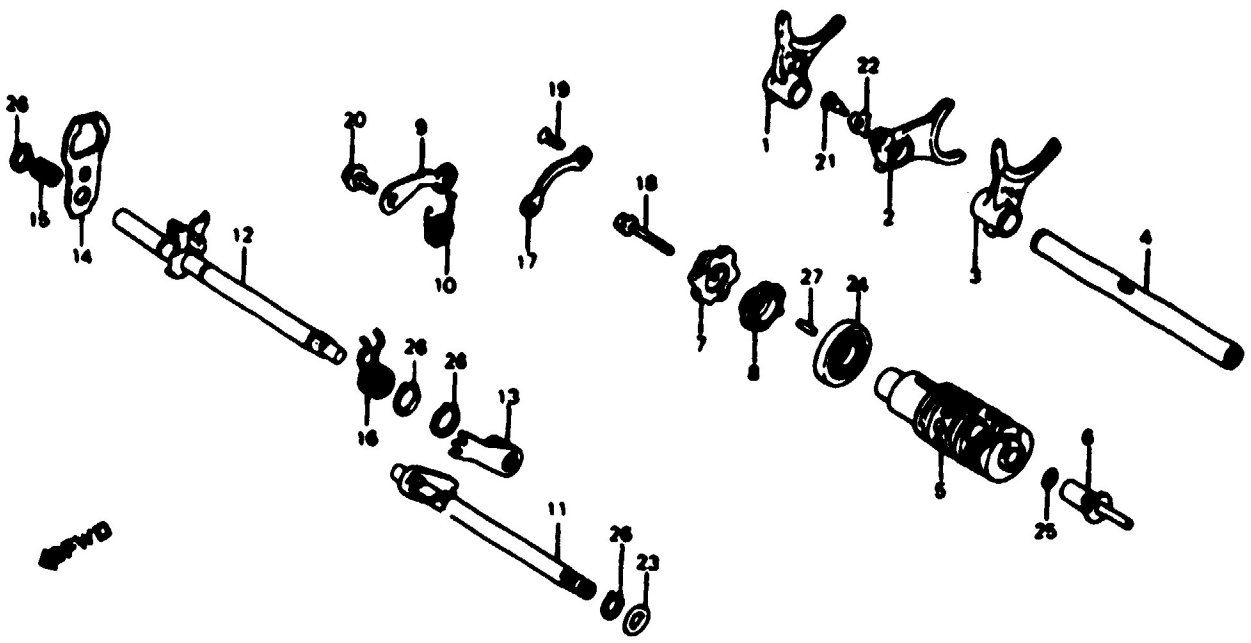

E14ME9015

VT750C'83

BLOCK NO. E-15

Ref. No.	DESCRIPTION	ENGINE SERIAL NUMBER FROM	ENGINE SERIAL NUMBER TO	QTY REQ	PART NUMBER	HONDA CODE
1	FORK, R. GEARSHIFT	-------	-------	1	24211-ME9-000	1368612
2	FORK, CENTER GEARSHIFT	-------	-------	1	24212-MB0-770	1372432
3	FORK, L. GEARSHIFT	-------	-------	1	24213-ME9-000	1368620
4	SHAFT COMP., GEARSHIFT FORK	-------	-------	1	24261-ME9-000	1368638
5	DRUM, GEARSHIFT	-------	-------	1	24302-ME9-000	1368646
6	HOLDER, GEARSHIFT DRUM	-------	-------	1	24304-ME9-000	1368653
7	CAM, GEARSHIFT	-------	-------	1	24411-ME9-003	1368661
8	ROTOR, POSITIVE STOPPER	-------	-------	1	24413-KA6-003	1035013
9	STOPPER COMP., GEARSHIFT DRUM ...	-------	-------	1	24430-ME9-000	1368679
10	SPRING, GEARSHIFT DRUM STOPPER ..	-------	-------	1	24435-ME9-000	1373547
11	SPINDLE COMP., GEARSHIFT (A)	-------	-------	1	24610-ME9-000	1368687
	SPINDLE COMP., GEARSHIFT	-------	-------	1	24610-ME9-010	1870872
	SPINDLE COMP., GEARSHIFT (A)	-------	-------	1	24660-ME9-305	1982974
	SPINDLE COMP., GEARSHIFT (A)	-------	-------	1	24660-ME9-315	2047090
12	SPINDLE COMP., GEARSHIFT (A)	-------	-------	1	24610-ME9-000	1368687
	SPINDLE COMP., GEARSHIFT	-------	-------	1	24610-ME9-010	1870872

© AMERICAN HONDA MOTOR CO. LTD. 1983

VT750C'83 ENGINE NO.; RC14E-2000051 TO 2022747
VT750C'83 FRAME NO.; RC140-DM000035 TO DM022807

VT750C '83

BLOCK NO. E-15

Ref. No.	DESCRIPTION	ENGINE SERIAL NUMBER FROM	ENGINE SERIAL NUMBER TO	QTY REQ	PART NUMBER	HONDA CODE
12	SPINDLE COMP. B, GEARSHIFT	-------	-------	1	24615-ME9-000	1368695
	SPINDLE COMP., GEARSHIFT (A)	-------	-------	1	24660-ME9-305	1982974
	SPINDLE COMP., GEARSHIFT (A)	-------	-------	1	24660-ME9-315	2047090
13	ARM B, GEARSHIFT	-------	-------	1	24618-ME9-000	1373554
14	PLATE, GEARSHIFT	-------	-------	1	24621-446-650	1036631
15	SPRING, GEARSHIFT PLATE	-------	-------	1	24631-362-000	0333542
16	SPRING, GEARSHIFT RETURN	-------	-------	1	24651-ME9-000	1373562
17	PLATE, BEARING SETTING	-------	-------	1	24710-ME9-000	1368711
18	BOLT, FLANGE, 6X32	-------	-------	1	90021-ME9-000	1414648
19	SCREW, FLAT, 6X16	-------	-------	2	90022-ME9-000	1393123
20	BOLT, GEARSHIFT DRUM STOPPER ARM PIVOT	-------	-------	1	90023-041-000	0141168
	BOLT, GEARSHIFT DRUM STOPPER ARM PIVOT	-------	-------	1	90023-041-010	2494375
21	BOLT, SPECIAL, 7X18	-------	-------	1	90041-MB0-000	1243468
22	WASHER, LOCK	-------	-------	1	90407-MB0-000	1243575
23	WASHER, THRUST, 12.5MM	-------	-------	1	90452-ME9-000	1373570
24	BEARING, RADIAL BALL, 16003	-------	-------	1	91008-KK6-000	2043123
	BEARING, RADIAL BALL, 16003	-------	-------	1	91008-362-000	0334854
	BEARING, RADIAL BALL, 16003	-------	-------	1	91010-HC0-003	2519544
25	O-RING, 10X1.6	-------	-------	1	91301-200-000	0022673
26	CIRCLIP, EXTERNAL, 12MM	-------	-------	4	94510-12000	0112847
27	ROLLER, 3X10	-------	-------	1	96222-30100	1373588

© AMERICAN HONDA MOTOR CO., LTD. 1983

CONTENTS

TITLE	PAGE	GRID
AIR CLEANER	86	E8
ALTERNATOR	17	B8
BATTERY	84	E7
BRAKE CALIPER, FR.	66	D10
BRAKE PANEL, RR.	70	D12
BRAKE PEDAL	90	E10
CABLE	52	D3
CAM CHAIN	10	B6
CAMSHAFT	8	B4
CARBURETOR ASSY.	41	C8
CARBURETOR COMPONENT	42	C9
CHANGE PEDAL	90	E10
CLUTCH	13	B6
CLUTCH MASTER CYLINDER	56	D6
CRANKCASE	26	C1
CRANKCASE COVER, L.	17	B8
CRANKCASE COVER, R.	11	B6
CRANKSHAFT	28	C2
CROSS SHAFT	36	C7
CYLINDER	4	B2
CYLINDER	6	B3
CYLINDER HEAD COVER	2	B1
CYLINDER HEAD, FR.	4	B2
CYLINDER HEAD, RR.	6	B3
FENDER, FR.	62	D8
FENDER, RR.	100	F3
FINAL DRIVEN GEAR	73	E1
FORK, FR.	63	D8
FR. BRAKE MASTER CYLINDER	54	D4
FRAME	110	F8
FUEL PUMP	84	E7
FUEL TANK	77	E3
GASKET KIT A	44	C10
GASKET KIT B	46	C11
GEARSHIFT DRUM	34	C5
HANDLEBAR	58	D6
HEADLIGHT	48	D1
HORN	60	D7
IGNITION COIL	108	F6
MUFFLER	88	E9
OIL FILTER	23	B11
OIL PUMP	23	B11
PISTON	28	C2
RADIATOR	108	F7
SEAT	80	E5
SHOCK ABSORBER	98	F2
SIDE COVER	82	E6
SPARK UNIT	100	F3
SPEEDOMETER	50	D2
STAND	94	E12
STARTING DRIVEN GEAR	16	B8
STARTING MOTOR	21	B10
STEERING STEM	60	D7
STEP	92	E11
SWINGARM	95	E12
SWITCH	52	D3
TACHOMETER	50	D2
TAILLIGHT	104	F5
TENSIONER	10	B5
THERMOSTAT	36	C6
TOOLS	112	F9
TOP BRIDGE	58	D6
TRANSMISSION	32	C4
TURN SIGNAL	102	F4
VALVE	8	B4
WATER PIPE	36	C6
WATER PUMP	19	B9
WHEEL, FR.	68	D11
WHEEL, RR.	72	E1
WIRE HARNESS	106	F6

GRID C5

WATER PIPE • THERMOSTAT

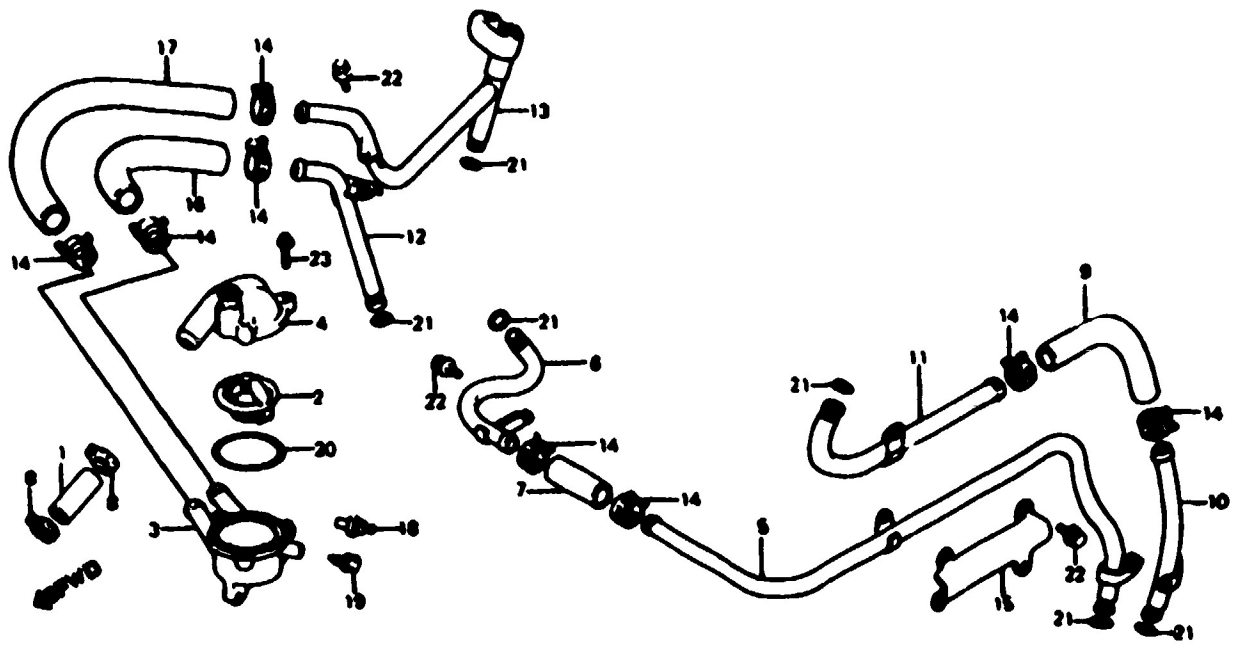

E14ME9016

Ref. No.	DESCRIPTION	ENGINE SERIAL NUMBER FROM	ENGINE SERIAL NUMBER TO	QTY REQ	PART NUMBER	HONDA CODE
	VT750C'83 BLOCK NO. E-16					
1	HOSE, RADIATOR UPPER	-------	-------	1	19116-ME9-000	1368117
2	THERMOSTAT	-------	-------	1	19300-MB0-003	1242155
3	CASE, THERMOSTAT	-------	-------	1	19311-ME9-000	1368182
4	COVER, THERMOSTAT	-------	-------	1	19315-ME9-000	1368190
	COVER, THERMOSTAT	-------	-------	1	19315-ME9-010	1758036
5	PIPE A-1, WATER	-------	-------	1	19501-ME9-000	1368208
	PIPE A-1, WATER	-------	-------	1	19501-ME9-010	3228939
6	PIPE A-2, WATER	-------	-------	1	19502-ME9-000	1368216
	PIPE A-2, WATER	-------	-------	1	19502-ME9-010	2739886
7	JOINT, WATER HOSE	-------	-------	1	19505-ME9-000	1368224
8	CLAMP, WATER HOSE	-------	-------	2	19506-KA4-000	1039635
9	HOSE B, JOINT WATER	-------	-------	1	19506-ME9-000	1368232
10	PIPE B1, WATER	-------	-------	1	19508-ME9-000	1368240
11	PIPE B-2, WATER	-------	-------	1	19509-ME9-000	1368257
	PIPE B-2, WATER	-------	-------	1	19509-ME9-010	2133122
12	PIPE A, WATER OUTLET	-------	-------	1	19511-ME9-000	1368265

© AMERICAN HONDA MOTOR CO. LTD. 1983

VT750C'83 ENGINE NO.; RC14E-2000051 TO 2022747
VT750C'83 FRAME NO.; RC140-DM000035 TO DM022807

VT750C'83

Ref. No.	BLOCK NO. E-16 DESCRIPTION	ENGINE SERIAL NUMBER FROM	TO	QTY REQ	PART NUMBER	HONDA CODE
12	PIPE A, OUTLET WATER	-------	-------	1	19511-ME9-010	4286175
13	PIPE B, WATER OUTLET	-------	-------	1	19512-ME9-000	1368273
	PIPE B, OUTLET WATER	-------	-------	1	19512-ME9-010	4117990
14	CLIP B, HOSE	-------	-------	8	19514-ME9-003	1536051
15	BRACKET, WATER PIPE	-------	-------	1	19515-ME9-000	1368299
16	HOSE A, WATER OUTLET	-------	-------	1	19521-ME9-000	1368307
17	HOSE B, WATER OUTLET	-------	-------	1	19522-ME9-000	1368315
18	THERMOSTAT UNIT	-------	-------	1	37750-ME9-003	1413590
19	BOLT, SPECIAL, 8MM	-------	-------	1	90042-ME9-000	1370931
20	O-RING, 58X2	-------	-------	1	91307-MB0-003	1260827
21	SEAL, WATER PIPE (ARAI)	-------	-------	6	91315-ME9-003	1373596
	SEAL, WATER PIPE (NOK)	-------	-------	6	91315-ME9-004	1373604
22	BOLT-WASHER, 6X12	-------	-------	6	93491-06012-07	1373364
23	BOLT, FLANGE, 6X20	-------	-------	3	96000-06020-00	0913806
	BOLT, FLANGE, 6X20	-------	-------	3	96001-06020-00	2529154

© AMERICAN HONDA MOTOR CO., LTD. 1983

CONTENTS

TITLE	PAGE	GRID
AIR CLEANER	86	E8
ALTERNATOR	17	B8
BATTERY	84	E7
BRAKE CALIPER, FR.	66	D10
BRAKE PANEL, RR.	70	D12
BRAKE PEDAL	80	E10
CABLE	52	D3
CAM CHAIN	10	B5
CAMSHAFT	8	B4
CARBURETOR ASSY.	41	C6
CARBURETOR COMPONENT	42	C8
CHANGE PEDAL	80	E10
CLUTCH	13	B6
CLUTCH MASTER CYLINDER	56	D5
CRANKCASE	26	C1
CRANKCASE COVER, L.	17	B6
CRANKCASE COVER, R.	11	B5
CRANKSHAFT	28	C2
CROSS SHAFT	38	C7
CYLINDER	4	B2
CYLINDER	6	B3
CYLINDER HEAD COVER	2	B1
CYLINDER HEAD, FR.	4	B2
CYLINDER HEAD, RR.	6	B3
FENDER, FR.	62	D8
FENDER, RR.	100	F3
FINAL DRIVEN GEAR	73	E1
FORK, FR.	63	D8
FR. BRAKE MASTER CYLINDER	54	D4
FRAME	110	F8
FUEL PUMP	84	E7
FUEL TANK	77	E3
GASKET KIT A	44	C10
GASKET KIT B	46	C11
GEARSHIFT DRUM	34	C5
HANDLEBAR	58	D6
HEADLIGHT	48	D1
HORN	60	D7
IGNITION COIL	106	F6
MUFFLER	88	E9
OIL FILTER	23	B11
OIL PUMP	23	B11
PISTON	28	C2
RADIATOR	108	F7
SEAT	80	E5
SHOCK ABSORBER	68	F2
SIDE COVER	82	E8
SPARK UNIT	100	F3
SPEEDOMETER	50	D2
STAND	84	E12
STARTING DRIVEN GEAR	16	B8
STARTING MOTOR	21	B10
STEERING STEM	60	D7
STEP	82	E11
SWINGARM	86	E12
SWITCH	52	D3
TACHOMETER	50	D2
TAILLIGHT	104	F5
TENSIONER	10	B5
THERMOSTAT	36	C6
TOOLS	112	F9
TOP BRIDGE	58	D6
TRANSMISSION	32	C4
TURN SIGNAL	102	F4
VALVE	8	B4
WATER PIPE	36	C6
WATER PUMP	19	B9
WHEEL, FR.	66	D11
WHEEL, RR.	72	E1
WIRE HARNESS	106	F6

GRID C6

CROSS SHAFT

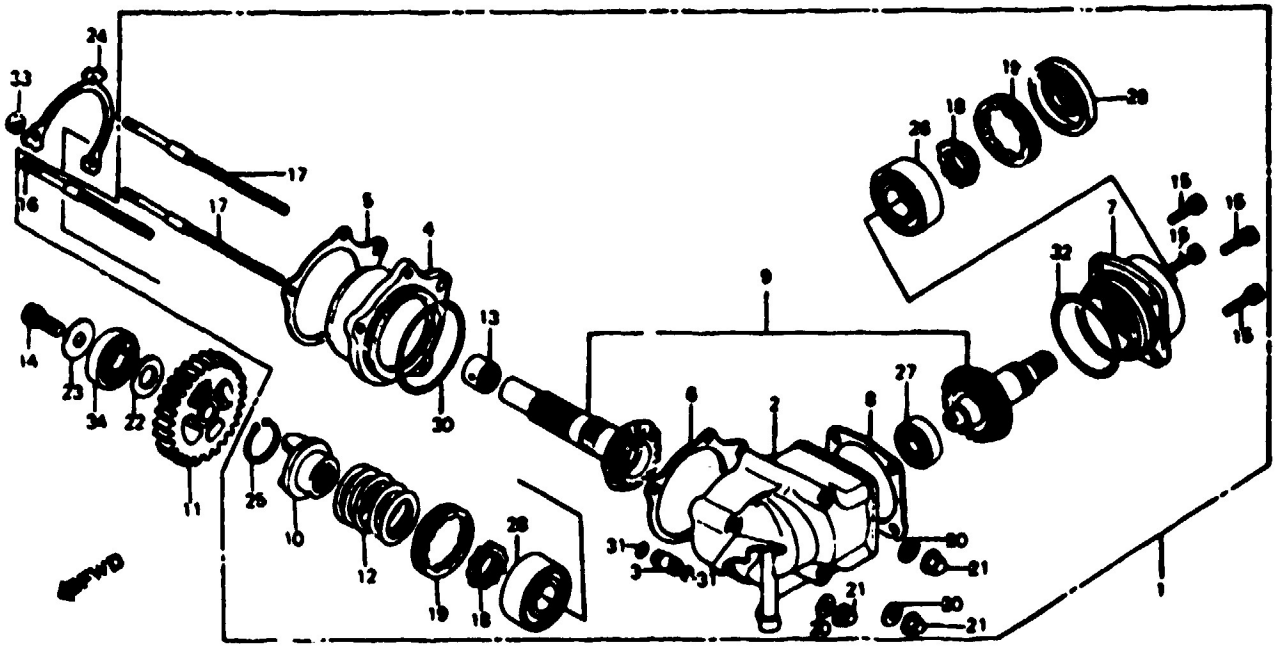

E14ME9017

VT750C'83

BLOCK NO. E-17

Ref. No.	DESCRIPTION	ENGINE SERIAL NUMBER FROM	ENGINE SERIAL NUMBER TO	QTY REQ	PART NUMBER	HONDA CODE
1	CASE ASSY., SIDE GEAR	-------	-------	1	21100-ME9-000	1368323
2	CASE COMP., SIDE GEAR	-------	-------	1	21200-ME9-000	1368331
3	ORIFICE, SIDE GEAR CASE	-------	-------	1	21215-ME9-000	1368349
4	HOLDER, FINAL DRIVESHAFT BEARING	-------	-------	1	21281-ME9-000	136835o
5	GASKET, FINAL DRIVESHAFT BEARING HOLDER	-------	-------	1	21294-ME9-000	1368364
6	SHIM, FINAL DRIVE SHAFT (0.40) ...	-------	-------	1	21311-ME9-000	1368372
	SHIM, FINAL DRIVE SHAFT (0.45) ...	-------	-------	1	21312-ME9-000	1368380
	SHIM, FINAL DRIVE SHAFT (0.50) ...	-------	-------	1	21313-ME9-000	1368398
	SHIM, FINAL DRIVE SHAFT (0.55) ...	-------	-------	1	21314-ME9-000	1368406
	SHIM, FINAL DRIVE SHAFT (0.60) ...	-------	-------	1	21315-ME9-000	1368414
7	HOLDER, CROSS SHAFT BEARING	-------	-------	1	21371-MB0-000	1242510
8	SHIM, CROSS SHAFT (0.40)	-------	-------	1	21381-MB0-770	1290907
	SHIM, CROSS SHAFT (0.45)	-------	-------	1	21382-MB0-770	1290931
	SHIM, CROSS SHAFT (0.50)	-------	-------	1	21383-MB0-770	1290949
	SHIM, CROSS SHAFT (0.55)	-------	-------	1	21384-MB0-770	1290956

© AMERICAN HONDA MOTOR CO., LTD. 1983

VT750C'83 ENGINE NO.; RC14E-2000051 TO 2022747
VT750C'83 FRAME NO.; RC140-DM000035 TO DM022807

VT750C '83

BLOCK NO. E-17

Ref. No.	DESCRIPTION	ENGINE SERIAL NUMBER FROM	ENGINE SERIAL NUMBER TO	QTY REQ	PART NUMBER	HONDA CODE
8	SHIM, CROSS SHAFT (0.60)	-------	-------	1	21385-MB0-770	1290980
9	SHAFT SET, CROSS	-------	-------	1	23200-ME9-000	1368505
10	LIFTER, DAMPER	-------	-------	1	23721-ME9-000	1368570
11	GEAR, DAMPER SHAFT (29T)	-------	-------	1	23726-ME9-000	1368596
12	SPRING, DAMPER	-------	-------	1	23732-ME9-000	1368604
13	COLLAR, 20X24X18.5	-------	-------	1	23733-ME9-000	1373257
14	BOLT, SPECIAL, 10MM	-------	-------	1	90037-ME9-000	1373539
15	BOLT, SOCKET, 8X22	-------	-------	4	90061-MB0-000	1243500
16	BOLT, STUD, 8X115	-------	-------	1	90062-ME9-003	1370956
17	BOLT, STUD, 8X146	-------	-------	2	90063-ME9-003	1370964
18	NUT, LOCK, 30MM	-------	-------	2	90241-MB0-000	1243559
19	NUT, LOCK, 64MM	-------	-------	2	90242-MB0-000	1243567
20	WASHER, SEALING, 7MM	-------	-------	3	90441-ME9-000	1371152
21	NUT, CAP, 8MM	-------	-------	3	90443-KF9-900	2054914
	NUT, CAP, 8MM	-------	-------	3	90443-379-690	0693051
22	WASHER, THRUST, 20MM	-------	-------	1	90451-426-000	1373612
23	WASHER, 10.2MM	-------	-------	1	90459-438-000	0814046
24	WASHER, TONGUED	-------	-------	1	90581-ME9-000	1371160
25	CIRCLIP, EXTERNAL, 28MM	-------	-------	1	90602-463-000	0912097
26	BEARING, BALL, 5206 (TOYO)	-------	-------	1	91008-300-008	0315358
27	BEARING, BALL, 6303 (KOYO)	-------	-------	1	91011-MB0-003	1243757
	BEARING, BALL, 6303 (TOYO)	-------	-------	1	91011-MB0-004	1243765
28	BEARING, RADIAL BALL, 5206	-------	-------	1	91012-MB0-003	1243773
29	OIL SEAL, 25X66X8.5	-------	-------	1	91205-MB0-000	1243864
	OIL SEAL, 25X66X8.5 (ARAI)	-------	-------	1	91205-MB0-771	1312776
	OIL SEAL, 25X66X8.5 (ARAI)	-------	-------	1	91205-MG7-003	1562446
30	O-RING, 64.5X3	-------	-------	1	91305-634-961	0583013
	O-RING, 64.5X3 (ARAI)	-------	-------	1	91310-MG7-003	1562461
31	O-RING, 4.9X1.9	-------	-------	2	91307-422-000	0689422
	O-RING, 4.8X1.9 (NOK)	-------	-------	2	91313-MA6-005	2138014
32	O-RING, 3X70	-------	-------	1	91314-MJ0-000	1690767
	O-RING, 70X3	-------	-------	1	91314-300-000	0483826

© AMERICAN HONDA MOTOR CO., LTD. 1983

CONTENTS

TITLE	PAGE	GRID
AIR CLEANER	86	E8
ALTERNATOR	17	B8
BATTERY	84	E7
BRAKE CALIPER, FR.	66	D10
BRAKE PANEL, RR.	70	D12
BRAKE PEDAL	90	E10
CABLE	52	D3
CAM CHAIN	10	B6
CAMSHAFT	8	B4
CARBURETOR ASSY.	41	C8
CARBURETOR COMPONENT	42	C9
CHANGE PEDAL	90	E10
CLUTCH	13	B6
CLUTCH MASTER CYLINDER	56	D5
CRANKCASE	26	C1
CRANKCASE COVER, L.	17	B8
CRANKCASE COVER, R.	11	B6
CRANKSHAFT	28	C2
CROSS SHAFT	38	C7
CYLINDER	4	B2
CYLINDER	6	B3
CYLINDER HEAD COVER	2	B1
CYLINDER HEAD, FR.	4	B2
CYLINDER HEAD, RR.	6	B3
FENDER, FR.	62	D8
FENDER, RR.	100	F3
FINAL DRIVEN GEAR	73	E1
FORK, FR.	63	D8
FR. BRAKE MASTER CYLINDER	54	D4
FRAME	110	F8
FUEL PUMP	84	E7
FUEL TANK	77	E3
GASKET KIT A	44	C10
GASKET KIT B	46	C11
GEARSHIFT DRUM	34	C5
HANDLEBAR	58	D6
HEADLIGHT	48	D1
HORN	60	D7
IGNITION COIL	106	F6
MUFFLER	88	E9
OIL FILTER	23	B11
OIL PUMP	23	B11
PISTON	28	C2
RADIATOR	108	F7
SEAT	80	E5
SHOCK ABSORBER	98	F2
SIDE COVER	82	E6
SPARK UNIT	100	F3
SPEEDOMETER	50	D2
STAND	94	E12
STARTING DRIVEN GEAR	16	B8
STARTING MOTOR	21	B10
STEERING STEM	60	D7
STEP	92	E11
SWINGARM	95	E12
SWITCH	52	D3
TACHOMETER	50	D2
TAILLIGHT	104	F5
TENSIONER	10	B6
THERMOSTAT	36	C6
TOOLS	112	F9
TOP BRIDGE	58	D6
TRANSMISSION	32	C4
TURN SIGNAL	102	F4
VALVE	8	B4
WATER PIPE	36	C6
WATER PUMP	19	B9
WHEEL, FR.	68	D11
WHEEL, RR.	72	E1
WIRE HARNESS	106	F6

GRID C7

CROSS SHAFT

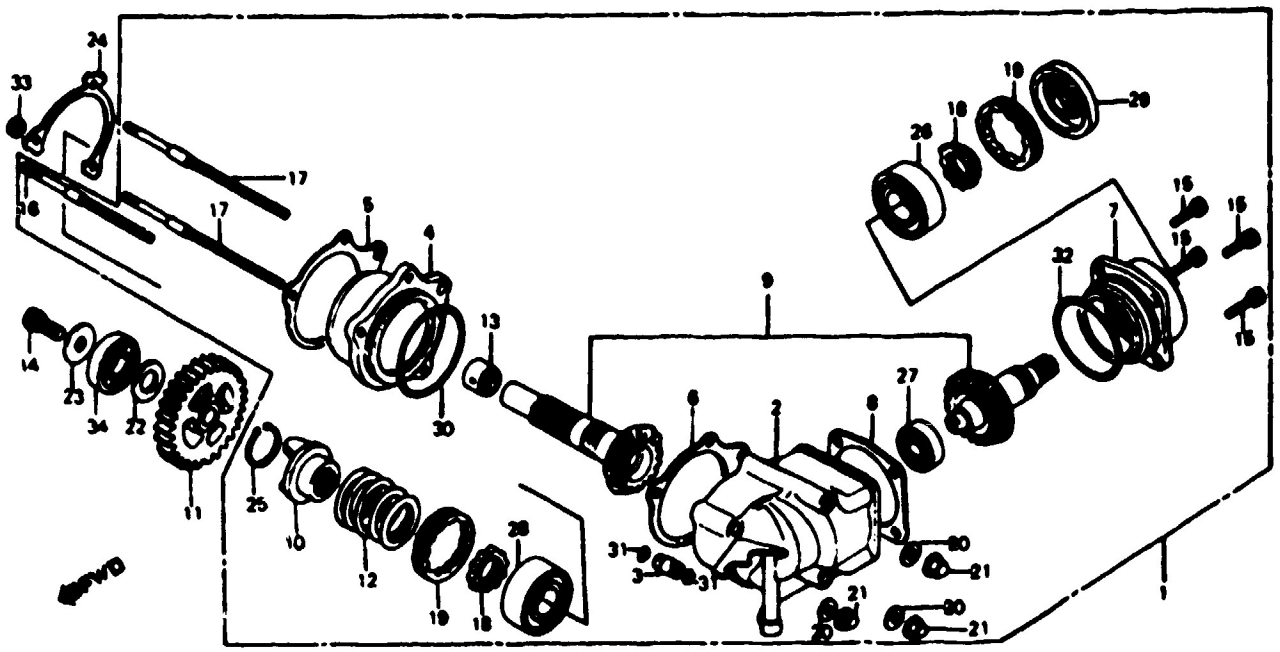

VT750C'83

Ref. No.	DESCRIPTION	ENGINE SERIAL NUMBER FROM	ENGINE SERIAL NUMBER TO	QTY REQ	PART NUMBER	HONDA CODE
	BLOCK NO. E-17					
33	NUT, HEX., 8MM	-------	-------	3	94030-08000	0114686
	NUT, HEX., 8MM	-------	-------	3	94030-08200	1325224
34	BEARING, RADIAL BALL, 6304	-------	-------	1	96100-63040-00	0341644

© AMERICAN HONDA MOTOR CO., LTD. 1983

VT750C'83 ENGINE NO.; RC14E-2000051 TO 2022747
VT750C'83 FRAME NO.; RC14D-DM000035 TO DM022807

CARBURETOR ASSY.

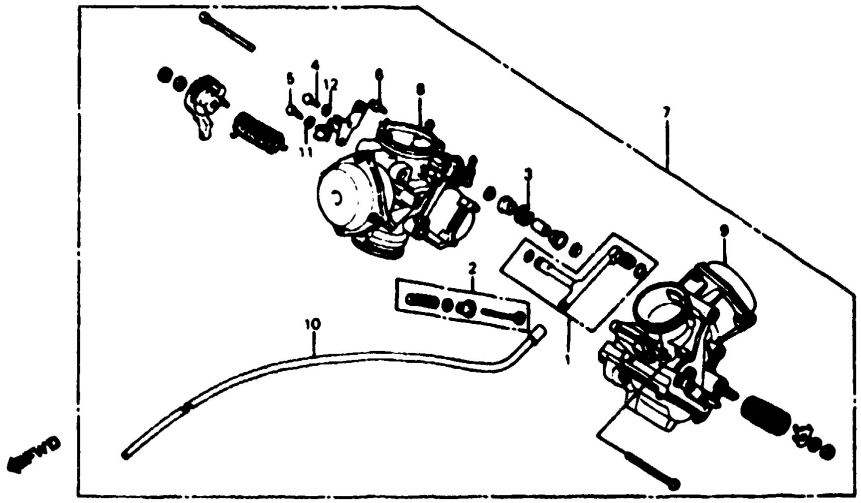

E14ME9018

VT750C'83

Ref. No.	DESCRIPTION (BLOCK NO. E-18)	ENGINE SERIAL NUMBER FROM	ENGINE SERIAL NUMBER TO	QTY REQ	PART NUMBER	HONDA CODE
1	JOINT SET	-------	-------	1	16026-ME9-671	1402700
2	SCREW SET	-------	-------	2	16028-KN9-711	3835923
	SCREW SET B	-------	-------	2	16028-ME9-671	1395508
3	SPRING	-------	-------	1	16053-ME9-671	1395516
	SPRING	-------	-------	1	16053-ME9-672	1535624
	SPRING	-------	-------	1	16053-MG7-601	1870591
4	BOLT, HEX.	-------	-------	1	16080-ME9-671	1395524
5	SCREW, PAN	-------	-------	1	16081-ME9-671	1395532
6	SCREW, PAN	-------	-------	2	16082-ME9-671	1393636
7	CARBURETOR ASSY.	-------	-------	1	16100-ME9-671	1415306
	CARBURETOR ASSY.	-------	-------	1	16100-ME9-672	1791052
8	CARBURETOR ASSY. 1	-------	-------	1	16101-ME9-671	1395557
9	CARBURETOR ASSY. 2	-------	-------	1	16102-ME9-671	1395565
10	PIPE, AIR VENT	-------	-------	1	16199-ME9-671	1402767
11	WASHER, SPRING, 4MM	-------	-------	1	94111-04800	0346114
12	WASHER, SPRING, 5MM	-------	-------	1	94111-05000	0058966

© AMERICAN HONDA MOTOR CO., LTD. 1983

CONTENTS

TITLE	PAGE	GRID
AIR CLEANER	86	E8
ALTERNATOR	17	B8
BATTERY	84	E7
BRAKE CALIPER, FR.	66	D10
BRAKE PANEL, RR.	70	D12
BRAKE PEDAL	90	E10
CABLE	52	D3
CAM CHAIN	10	B6
CAMSHAFT	8	B4
CARBURETOR ASSY.	41	C8
CARBURETOR COMPONENT	42	C9
CHANGE PEDAL	90	E10
CLUTCH	13	B8
CLUTCH MASTER CYLINDER	56	D5
CRANKCASE	26	C1
CRANKCASE COVER, L.	17	B8
CRANKCASE COVER, R.	11	B6
CRANKSHAFT	28	C2
CROSS SHAFT	38	C7
CYLINDER	4	B2
CYLINDER	6	B3
CYLINDER HEAD COVER	2	B1
CYLINDER HEAD, FR.	4	B2
CYLINDER HEAD, RR.	6	B3
FENDER, FR.	62	D8
FENDER, RR.	100	F3
FINAL DRIVEN GEAR	73	E1
FORK, FR.	63	D8
FR. BRAKE MASTER CYLINDER	54	D4
FRAME	110	F8
FUEL PUMP	84	E7
FUEL TANK	77	E3
GASKET KIT A	44	C10
GASKET KIT B	46	C11
GEARSHIFT DRUM	34	C5
HANDLEBAR	58	D6
HEADLIGHT	48	D1
HORN	60	D7
IGNITION COIL	106	F6
MUFFLER	88	E9
OIL FILTER	23	B11
OIL PUMP	23	B11
PISTON	28	C2
RADIATOR	108	F7
SEAT	80	E5
SHOCK ABSORBER	98	F2
SIDE COVER	82	E6
SPARK UNIT	100	F3
SPEEDOMETER	50	D2
STAND	94	E12
STARTING DRIVEN GEAR	16	B8
STARTING MOTOR	21	B10
STEERING STEM	60	D7
STEP	92	E11
SWINGARM	96	E12
SWITCH	52	D3
TACHOMETER	50	D2
TAILLIGHT	104	F5
TENSIONER	10	B5
THERMOSTAT	36	C6
TOOLS	112	F9
TOP BRIDGE	58	D6
TRANSMISSION	32	C4
TURN SIGNAL	102	F4
VALVE	8	B4
WATER PIPE	36	C6
WATER PUMP	19	B9
WHEEL, FR.	68	D11
WHEEL, RR.	72	E1
WIRE HARNESS	106	F6

GRID **C8**

CARBURETOR COMPONENT

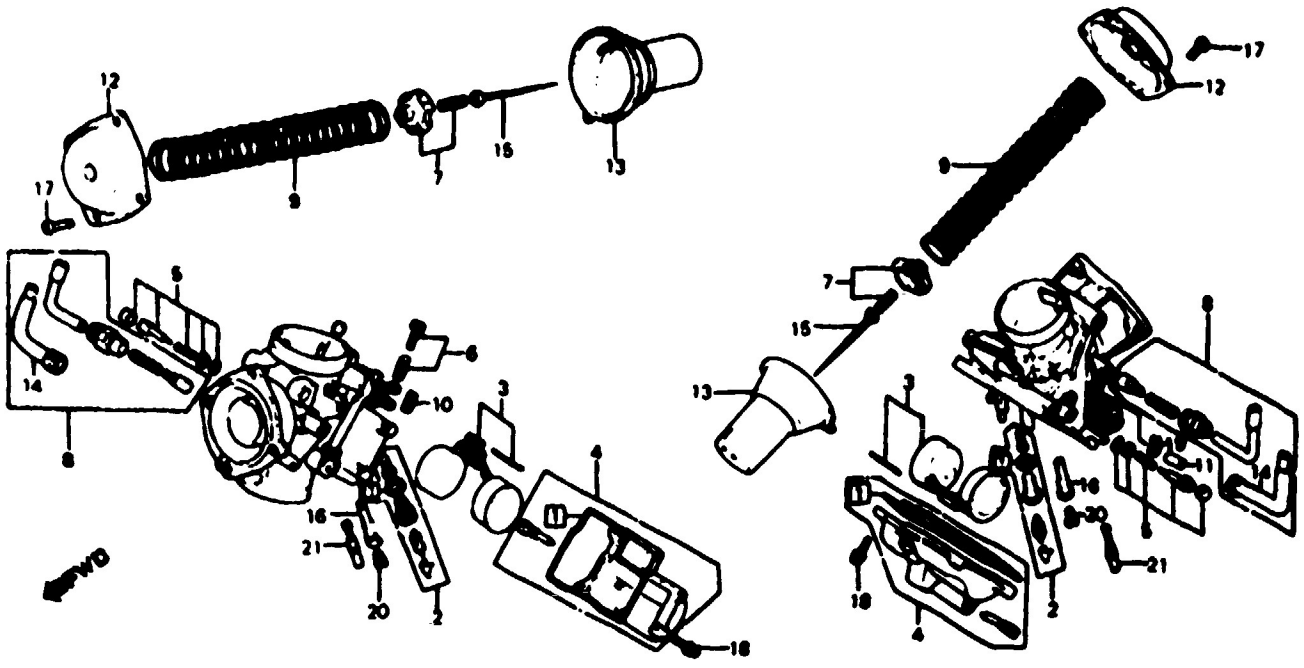

E14ME801801

Ref. No.	DESCRIPTION	ENGINE SERIAL NUMBER FROM	ENGINE SERIAL NUMBER TO	QTY REQ	PART NUMBER	HONDA CODE
	VT750C '83 BLOCK NO. E-18-1					
1	GASKET SET	-------	-------	2	16010-MB6-305	3911518
	GASKET SET	-------	-------	2	16010-ME9-671	1393628
	GASKET SET	-------	-------	2	16010-ME9-672	2312981
	GASKET SET	-------	-------	2	16010-ME9-721	3039849
2	VALVE SET, FLOAT	-------	-------	2	16011-MB0-671	1241744
	VALVE SET, FLOAT	-------	-------	2	16011-MR6-671	2825776
3	FLOAT SET	-------	-------	2	16013-MB0-671	1241751
4	CHAMBER SET, FLOAT	-------	-------	2	16015-ME9-671	1395607
	CHAMBER SET, FLOAT	-------	-------	2	16015-MG8-721	2045458
5	SCREW SET A	-------	-------	2	16016-MB0-671	1241777
	SCREW SET A	-------	-------	2	16016-ME3-003	4084067
	SCREW SET A	-------	-------	2	16016-ME9-671	1395623
6	SCREW SET C	-------	-------	1	16029-MB0-671	1241843
7	PLATE SET, VALVE	-------	-------	2	16037-ME9-671	1395631
8	VALVE SET, STARTER	-------	-------	2	16046-ME9-671	1395649
	VALVE SET, STARTER	-------	-------	2	16046-ME9-672	2268621

© AMERICAN HONDA MOTOR CO., LTD. 1983

VT750C'83 ENGINE NO.; RC14E-2000051 TO 2022747
VT750C'83 FRAME NO.; RC140-DM000035 TO DM022807

VT750C'03

Ref. No.	DESCRIPTION (BLOCK NO. E-18-1)	ENGINE SERIAL NUMBER FROM	ENGINE SERIAL NUMBER TO	QTY REQ	PART NUMBER	HONDA CODE
9	SPRING, VACUUM PISTON	-------	-------	2	16050-ME9-671	1402718
10	SPRING	-------	-------	1	16052-ME9-671	1395664
	SPRING	-------	-------	1	16052-ME9-672	1535616
11	CAP	-------	-------	1	16097-ME9-671	1432566
12	TOP COMP.	-------	-------	2	16107-ME9-671	1402734
13	PISTON COMP., VACUUM	-------	-------	2	16111-ME9-671	1395680
14	CAP, CABLE SEALING	-------	-------	2	16118-ME9-671	1395698
15	NEEDLE, JET	-------	-------	2	16131-ME9-671	1402742
16	HOLDER, NEEDLE JET	-------	-------	2	16165-ME9-671	1402759
17	SCREW, PAN, 4X10	-------	-------	8	93500-04010-0H	0262964
	SCREW, PAN, 4X10	-------	-------	8	93500-04010-1H	0753970
18	SCREW-WASHER, 4X14	-------	-------	8	93892-04014-10	1373802
19	CLIP, TUBE, B7	-------	-------	1	95002-02070	0250639
20	JET, MAIN, #118	-------	-------	2	99101-393-1180	1395722
21	JET, SLOW, #40	-------	-------	2	99103-437-0400	1317106

© AMERICAN HONDA MOTOR CO., LTD. 1993

CONTENTS

TITLE	PAGE	GRID
AIR CLEANER	86	E8
ALTERNATOR	17	B8
BATTERY	84	E7
BRAKE CALIPER, FR	66	D10
BRAKE PANEL, RR	70	D12
BRAKE PEDAL	90	E10
CABLE	52	D3
CAM CHAIN	10	B6
CAMSHAFT	8	B4
CARBURETOR ASSY.	41	C8
CARBURETOR COMPONENT	42	C9
CHANGE PEDAL	90	E10
CLUTCH	13	B6
CLUTCH MASTER CYLINDER	56	D6
CRANKCASE	26	C1
CRANKCASE COVER, L	17	B8
CRANKCASE COVER, R	11	B5
CRANKSHAFT	28	C2
CROSS SHAFT	36	C7
CYLINDER	4	B2
CYLINDER	6	B3
CYLINDER HEAD COVER	2	B1
CYLINDER HEAD, FR.	4	B2
CYLINDER HEAD, RR.	6	B3
FENDER, FR.	62	D8
FENDER, RR.	100	F3
FINAL DRIVEN GEAR	73	E1
FORK, FR.	63	D8
FR. BRAKE MASTER CYLINDER	54	D4
FRAME	110	F8
FUEL PUMP	84	E7
FUEL TANK	77	E3
GASKET KIT A	44	C10
GASKET KIT B	46	C11
GEARSHIFT DRUM	34	C5
HANDLEBAR	58	D6
HEADLIGHT	48	D1
HORN	60	D7
IGNITION COIL	106	F6
MUFFLER	88	E9
OIL FILTER	23	B11
OIL PUMP	23	B11
PISTON	28	C2
RADIATOR	108	F7
SEAT	80	E5
SHOCK ABSORBER	98	F2
SIDE COVER	82	E6
SPARK UNIT	100	F3
SPEEDOMETER	50	D2
STAND	94	E12
STARTING DRIVEN GEAR	16	B8
STARTING MOTOR	21	B10
STEERING STEM	60	D7
STEP	92	E11
SWINGARM	95	E12
SWITCH	52	D3
TACHOMETER	50	D2
TAILLIGHT	104	F5
TENSIONER	10	B5
THERMOSTAT	36	C8
TOOLS	112	F9
TOP BRIDGE	58	D6
TRANSMISSION	32	C4
TURN SIGNAL	102	F4
VALVE	8	B4
WATER PIPE	36	C8
WATER PUMP	19	B9
WHEEL, FR.	68	D11
WHEEL, RR.	72	E1
WIRE HARNESS	106	F6

GRID **C9**

GASKET KIT A

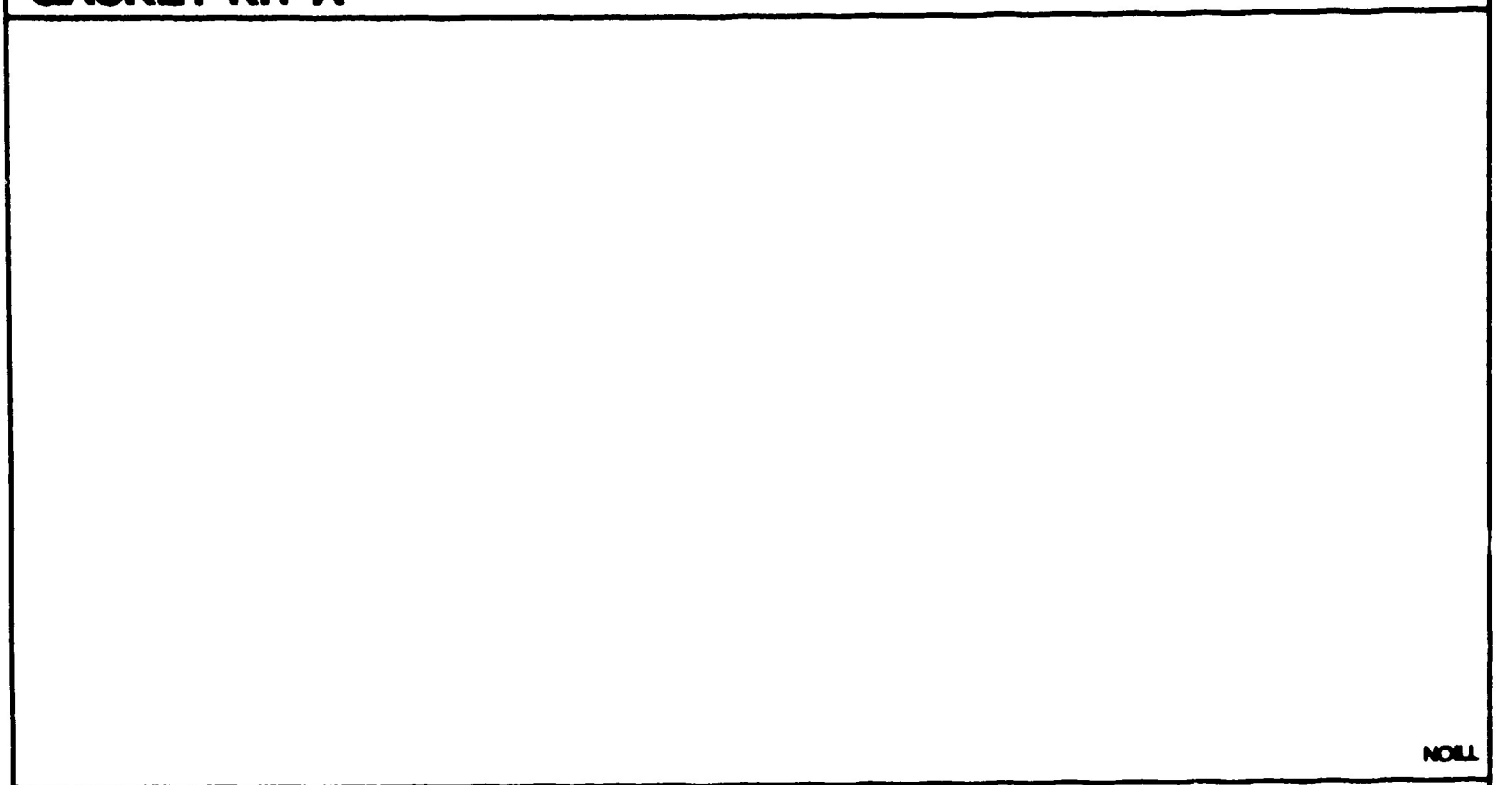

NOILL

VT750C'83

Ref. No.	DESCRIPTION (BLOCK NO. EOP-1)	ENGINE SERIAL NUMBER FROM	ENGINE SERIAL NUMBER TO	QTY REQ	PART NUMBER	HONDA CODE
	GASKET KIT A	-------	-------	1	061A1-ME9-000	3634755
	GASKET KIT A	-------	-------	1	061A1-ME9-305	3635992
1	GASKET, CYLINDER	-------	-------	2	12191-ME9-305	2054302
2	SEAL, VALVE STEM (NOK)	-------	-------	6	12209-MB9-003	1094366
	SEAL, VALVE STEM	-------	-------	6	12209-300-003	0188920
3	GASKET, TAPPET COVER	-------	-------	2	12232-ME9-000	1366947
	GASKET, TAPPET COVER	-------	-------	2	12232-ME9-306	4195558
4	GASKET, CYLINDER HEAD	-------	-------	2	12250-ME9-305	2027449
	GASKET, CYLINDER HEAD	-------	-------	2	12251-ME9-000	1366962
5	GASKET, CAM CHAIN COVER	-------	-------	2	12321-ME9-000	1366996
	GASKET, CAM CHAIN COVEER	-------	-------	2	12321-ME9-306	4300521
6	GASKET, EX. PIPE	-------	-------	2	18291-ME9-000	1367929
7	WASHER, SEALING, 7MM	-------	-------	4	90441-MC0-000	1117936
8	WASHER, SEALING, 6MM	-------	-------	4	90441-706-000	0163600
9	WASHER, OIL BOLT	-------	-------	2	90545-300-000	0189902
10	O-RING, 15X2.5	-------	-------	4	91302-377-000	0386995

© AMERICAN HONDA MOTOR CO., LTD. 1983

VT750C'83 ENGINE NO.; RC14E-2000051 TO 2022747
VT750C'83 FRAME NO.; RC140-DM000035 TO DM022807

VT750C'83					
Ref. No.	BLOCK NO. EOP-1 DESCRIPTION	ENGINE SERIAL NUMBER FROM	TO	QTY REQ	PART NUMBER	HONDA CODE
11	O-RING, 27.4X2.4 (ARAI)	-------	-------	2	91302-567-003	0335000
	O-RING, 27.4X2.4	-------	-------	2	91304-MG7-003	1871326
12	O-RING, 19.8x1.9 (ARAI)	-------	-------	2	91308-MG7-003	2316495
	O-RING, 19.8X1.9 (ARAI)	-------	-------	2	91308-PA9-003	0897074
13	O-RING, 35X3	-------	-------	2	91351-689-000	0737395

© AMERICAN HONDA MOTOR CO., LTD. 1983

CONTENTS

TITLE	PAGE	GRID
AIR CLEANER	86	E8
ALTERNATOR	17	B6
BATTERY	84	E7
BRAKE CALIPER, FR.	66	D10
BRAKE PANEL, RR.	70	D12
BRAKE PEDAL	90	E10
CABLE	52	D3
CAM CHAIN	10	B5
CAMSHAFT	8	B4
CARBURETOR ASSY.	41	C8
CARBURETOR COMPONENT	42	C9
CHANGE PEDAL	90	E10
CLUTCH	13	B6
CLUTCH MASTER CYLINDER	56	D6
CRANKCASE	26	C1
CRANKCASE COVER, L.	17	B6
CRANKCASE COVER, R.	11	B5
CRANKSHAFT	28	C2
CROSS SHAFT	38	C7
CYLINDER	4	B2
CYLINDER	6	B3
CYLINDER HEAD COVER	2	B1
CYLINDER HEAD, FR.	4	B2
CYLINDER HEAD, RR.	6	B3
FENDER, FR.	62	D8
FENDER, RR.	100	F3
FINAL DRIVEN GEAR	73	E1
FORK, FR.	63	D8
FR. BRAKE MASTER CYLINDER	54	D4
FRAME	110	F8
FUEL PUMP	84	E7
FUEL TANK	77	E3
GASKET KIT A	44	C10
GASKET KIT B	46	C11
GEARSHIFT DRUM	34	C5
HANDLEBAR	58	D6
HEADLIGHT	48	D1
HORN	60	D7
IGNITION COIL	106	F6
MUFFLER	88	E9
OIL FILTER	23	B11
OIL PUMP	23	B11
PISTON	28	C2
RADIATOR	108	F7
SEAT	80	E5
SHOCK ABSORBER	98	F2
SIDE COVER	82	E6
SPARK UNIT	100	F3
SPEEDOMETER	50	D2
STAND	94	E12
STARTING DRIVEN GEAR	16	B6
STARTING MOTOR	21	B10
STEERING STEM	60	D7
STEP	92	E11
SWINGARM	95	E12
SWITCH	52	D3
TACHOMETER	50	D2
TAILLIGHT	104	F5
TENSIONER	10	B5
THERMOSTAT	36	C6
TOOLS	112	F9
TOP BRIDGE	58	D6
TRANSMISSION	32	C4
TURN SIGNAL	102	F4
VALVE	8	B4
WATER PIPE	36	C6
WATER PUMP	19	B9
WHEEL, FR.	68	D11
WHEEL, RR.	72	E1
WIRE HARNESS	106	F6

GRID **C10**

GASKET KIT B

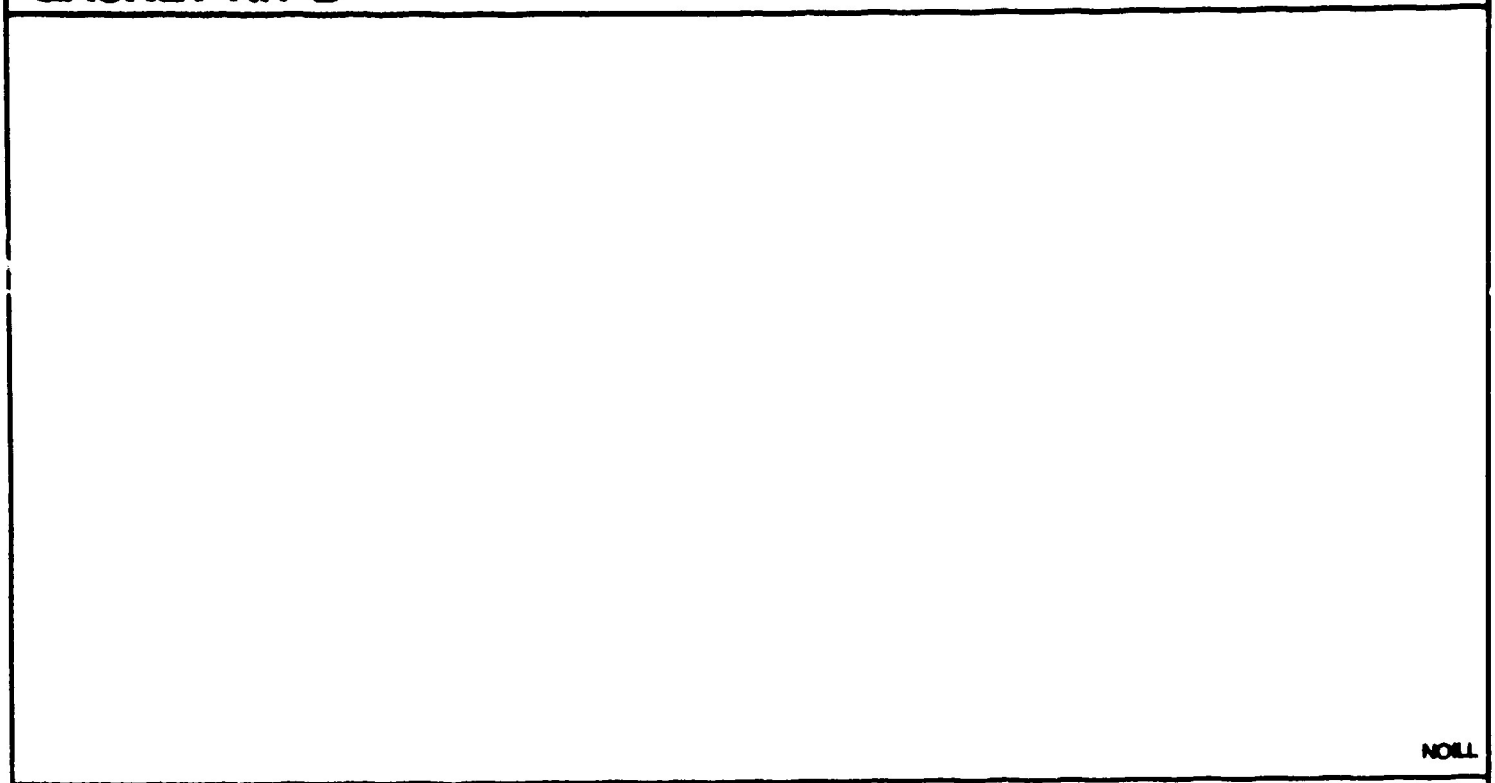

NOILL

VT750C'83

Ref. No.	BLOCK NO. EOP-2 DESCRIPTION	ENGINE SERIAL NUMBER FROM	TO	QTY REQ	PART NUMBER	HONDA CODE
	GASKET KIT B	-------	-------	1	061B1-ME9-000	3634763
1	GASKET, CLUTCH COVER	-------	-------	1	11372-ME9-000	1366830
2	GASKET, R. COVER	-------	-------	1	11394-ME9-000	1366848
	GASKET, R. COVER	-------	-------	1	11394-MK7-306	4315354
	GASKET, R. COVER	-------	-------	1	11394-MK7-670	2312726
3	GASKET, L. COVER	-------	-------	1	11395-ME9-000	1366855
4	GASKET, OIL STRAINER	-------	-------	1	15154-425-000	0716191
5	GASKET, WATER PUMP COVER	-------	-------	1	19226-ME9-000	1368174
6	GASKET, FINAL DRIVESHAFT BEARING HOLDER	-------	-------	1	21294-ME9-000	1368364
7	INSULATOR, CLUTCH SLAVE CYLINDER	-------	-------	1	22862-MB0-000	1242619
8	WASHER, SEALING, 6MM	-------	-------	1	90441-706-000	0163600
9	O-RING, 10X1.6	-------	-------	1	91301-200-000	0022673
10	O-RING, 22X3.0	-------	-------	1	91301-250-000	0035287
	O-RING, 22X3.0	-------	-------	1	91307-425-003	1216126
11	O-RING, 32.95X2.62 (ARAI)	-------	-------	1	91302-MB0-013	1435114

 © AMERICAN HONDA MOTOR CO., LTD. 1993

VT750C'83 ENGINE NO.; RC14E-2000051 TO 2022747
VT750C'83 FRAME NO.; RC140-DM000035 TO DM022807

VT750C'83

Ref. No.	BLOCK NO. EOP-2 DESCRIPTION	ENGINE SERIAL NUMBER FROM	TO	QTY REQ	PART NUMBER	HONDA CODE
12	O-RING, 13.8x2.5	-------	-------	2	91303-MC7-003	2995447
	O-RING, 13.8x2.5	-------	-------	2	91303-377-000	0499525
	O-RING, 13.8x2.5	-------	-------	2	91303-426-000	1113372
13	O-RING, 5X1.7 (ARAI)	-------	-------	2	91305-MG7-003	2023901
	O-RING, 5X1.7	-------	-------	2	91305-333-000	0294769
14	O-RING, 58X2	-------	-------	1	91307-MB0-003	1260827
15	O-RING, 4.9X1.9	-------	-------	2	91307-422-000	0689422
	O-RING, 4.8X1.9 (NOK)	-------	-------	2	91313-MA6-005	2138014
16	O-RING, 14.6X3.7 (ARAI)	-------	-------	2	91309-MB0-003	1260843
17	O-RING, 24.4X3.1 (ARAI)	-------	-------	1	91309-425-003	1113422
	O-RING, 24.4X3.1	-------	-------	1	91312-MG7-003	2618221
18	O-RING, 14.7X2.2 (ARAI)	-------	-------	1	91313-MB0-003	1260868
	O-RING, 14.8X2.2	-------	-------	1	91313-MG7-004	3353620
19	SEAL, WATER PIPE (ARAI)	-------	-------	6	91315-ME9-003	1373596
	SEAL, WATER PIPE (NOK)	-------	-------	6	91315-ME9-004	1373604
20	O-RING, 35X3	-------	-------	1	91351-689-000	0737395
21	O-RING, 41.5X2	-------	-------	1	91358-MC7-003	1373414
22	WASHER, DRAIN PLUG, 14MM	-------	-------	1	94109-14000	0171876

© AMERICAN HONDA MOTOR CO., LTD. 1983

CONTENTS

TITLE	PAGE	GRID
AIR CLEANER	86	E8
ALTERNATOR	17	B8
BATTERY	84	E7
BRAKE CALIPER, FR.	66	D10
BRAKE PANEL, RR.	70	D12
BRAKE PEDAL	90	E10
CABLE	52	D3
CAM CHAIN	10	B6
CAMSHAFT	8	B4
CARBURETOR ASSY.	41	C8
CARBURETOR COMPONENT	42	C9
CHANGE PEDAL	90	E10
CLUTCH	13	B6
CLUTCH MASTER CYLINDER	56	D5
CRANKCASE	26	C1
CRANKCASE COVER, L.	17	B8
CRANKCASE COVER, R.	11	B5
CRANKSHAFT	28	C2
CROSS SHAFT	38	C7
CYLINDER	4	B2
CYLINDER	6	B3
CYLINDER HEAD COVER	2	B1
CYLINDER HEAD, FR.	4	B2
CYLINDER HEAD, RR.	6	B3
FENDER, FR.	62	D8
FENDER, RR.	100	F3
FINAL DRIVEN GEAR	73	E1
FORK, FR.	63	D8
FR. BRAKE MASTER CYLINDER	54	D4
FRAME	110	F8
FUEL PUMP	84	E7
FUEL TANK	77	E3
GASKET KIT A	44	C10
GASKET KIT B	46	C11
GEARSHIFT DRUM	34	C5
HANDLEBAR	58	D6
HEADLIGHT	48	D1
HORN	60	D7
IGNITION COIL	106	F6
MUFFLER	88	E9
OIL FILTER	23	B11
OIL PUMP	23	B11
PISTON	28	C2
RADIATOR	108	F7
SEAT	80	E5
SHOCK ABSORBER	98	F2
SIDE COVER	82	E6
SPARK UNIT	100	F3
SPEEDOMETER	50	D2
STAND	94	E12
STARTING DRIVEN GEAR	16	B8
STARTING MOTOR	21	B10
STEERING STEM	60	D7
STEP	92	E11
SWINGARM	95	E12
SWITCH	52	D3
TACHOMETER	50	D2
TAILLIGHT	104	F5
TENSIONER	10	B5
THERMOSTAT	36	C6
TOOLS	112	F9
TOP BRIDGE	58	D6
TRANSMISSION	32	C4
TURN SIGNAL	102	F4
VALVE	8	B4
WATER PIPE	36	C6
WATER PUMP	19	B9
WHEEL, FR.	68	D11
WHEEL, RR.	72	E1
WIRE HARNESS	106	F6

GRID **C11**

HEADLIGHT

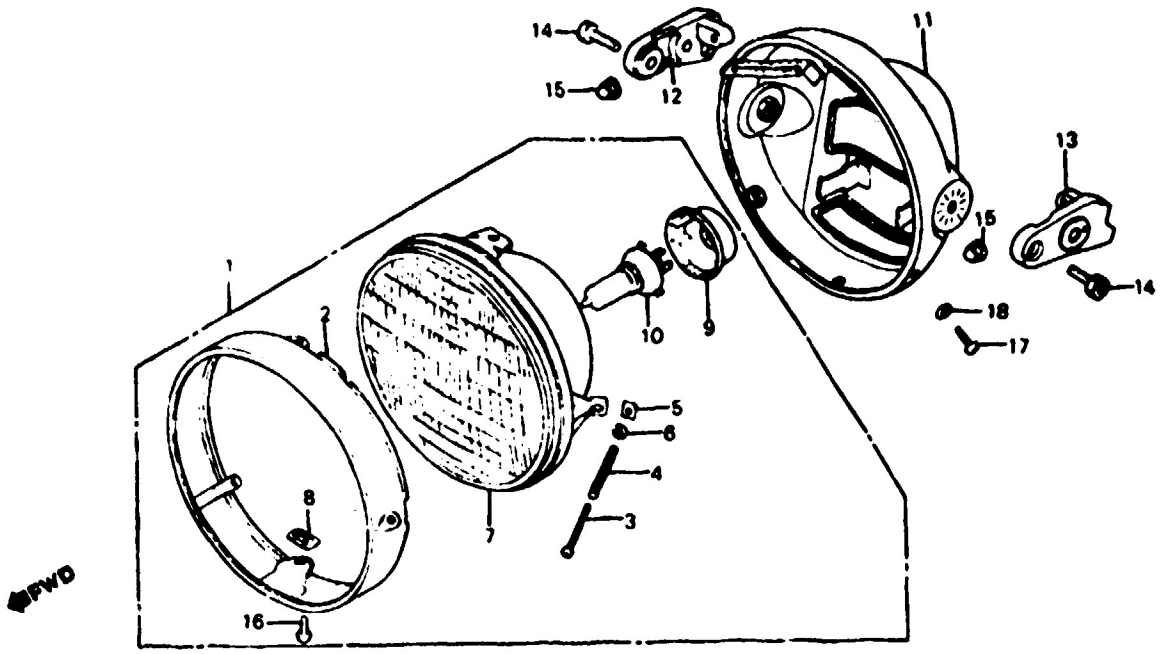

F14ME9001

VT750C'83

Ref. No.	DESCRIPTION (BLOCK NO. F-1)	FRAME SERIAL NUMBER FROM	FRAME SERIAL NUMBER TO	QTY REQ	PART NUMBER	HONDA CODE
1	HEADLIGHT ASSY. (12V65/45W)	-------	-------	1	33100-ME9-671	1413558
	HEADLIGHT ASSY. (12V60/55W)	-------	-------	1	33100-MF5-751	2008894
2	RIM, HEADLIGHT	-------	-------	1	33101-MB1-003	1262278
3	SCREW, BEAM ADJUSTING	-------	-------	1	33103-346-670	0398248
4	SPRING, HEADLIGHT BEAM ADJUSTING	-------	-------	1	33107-300-003	0191684
5	NUT, BEAM ADJUSTING (STANLEY) ...	-------	-------	1	33117-415-003	0668434
6	WASHER, BEAM ADJUSTING	-------	-------	1	33119-371-003	0406082
7	HEADLIGHT UNIT	-------	-------	1	33120-MB1-671	1246347
	HEADLIGHT UNIT	-------	-------	1	33120-MB1-770	1295963
	HEADLIGHT UNIT	-------	-------	1	33120-ME9-670	1455211
	HEADLIGHT UNIT	-------	-------	1	33120-ME9-671	1510270
	HEADLIGHT UNIT	-------	-------	1	33120-MF5-751	2008902
8	NUT, UNIT HOLDER	-------	-------	2	33128-292-670	0182261
9	COVER, RUBBER	-------	-------	1	33180-422-003	0692178
10	BULB, HEADLIGHT (H4 JA12V60/55W)	-------	-------	1	34901-MC7-601	1288612
	BULB, 12V60/55W H4	-------	-------	1	34901-MC7-601AH	3924347

© AMERICAN HONDA MOTOR CO., LTD. 1993

VT750C'83 ENGINE NO.; RC14E-2000051 TO 2022747
VT750C'83 FRAME NO.; RC140-DM000035 TO DM022807

VT750C'83

Ref. No.	BLOCK NO. F-1 DESCRIPTION	FRAME SERIAL NUMBER FROM	TO	QTY REQ	PART NUMBER	HONDA CODE
11	CASE, HEADLIGHT	-------	-------	1	61301-ME9-000	1370550
12	STAY, R. HEADLIGHT	-------	-------	1	61312-ME9-000	1370568
13	STAY, L. HEADLIGHT	-------	-------	1	61313-ME9-000	1370576
14	BOLT, SOCKET	-------	-------	2	90109-MB0-000	1250950
	BOLT, SOCKET, 8X18	-------	-------	2	90157-MB1-000	1251164
15	NUT, FLANGE CAP, 8MM	-------	-------	2	90208-438-000	0765669
16	SCREW, PAN, 5X8	-------	-------	2	93500-05008-0H	0359422
17	SCREW, PAN, 5X16	-------	-------	2	93500-05016-0B	C192914
18	WASHER, SPRING, 5MM	-------	-------	2	94111-05000	0058966

© AMERICAN HONDA MOTOR CO., LTD. 1993

CONTENTS

TITLE	PAGE	GRID
AIR CLEANER	86	E8
ALTERNATOR	17	B8
BATTERY	84	E7
BRAKE CALIPER, FR.	66	D10
BRAKE PANEL, RR.	70	D12
BRAKE PEDAL	90	E10
CABLE	52	D3
CAM CHAIN	10	B5
CAMSHAFT	8	B4
CARBURETOR ASSY.	41	C8
CARBURETOR COMPONENT	42	C9
CHANGE PEDAL	90	E10
CLUTCH	13	B6
CLUTCH MASTER CYLINDER	56	D5
CRANKCASE	26	C1
CRANKCASE COVER, L.	17	B8
CRANKCASE COVER, R.	11	B5
CRANKSHAFT	28	C2
CROSS SHAFT	38	C7
CYLINDER	4	B2
CYLINDER	6	B3
CYLINDER HEAD COVER	2	B1
CYLINDER HEAD, FR.	4	B2
CYLINDER HEAD, RR.	6	B3
FENDER, FR.	62	D8
FENDER, RR.	100	F3
FINAL DRIVEN GEAR	73	E1
FORK, FR.	63	D8
FR. BRAKE MASTER CYLINDER	54	D4
FRAME	110	F8
FUEL PUMP	84	E7
FUEL TANK	77	E3
GASKET KIT A	44	C10
GASKET KIT B	46	C11
GEARSHIFT DRUM	34	C5
HANDLEBAR	58	D6
HEADLIGHT	48	D1
HORN	60	D7
IGNITION COIL	106	F6
MUFFLER	88	E9
OIL FILTER	23	B11
OIL PUMP	23	B11
PISTON	28	C2
RADIATOR	108	F7
SEAT	80	E5
SHOCK ABSORBER	98	F2
SIDE COVER	82	E6
SPARK UNIT	100	F3
SPEEDOMETER	50	D2
STAND	94	E12
STARTING DRIVEN GEAR	16	B8
STARTING MOTOR	21	B10
STEERING STEM	60	D7
STEP	92	E11
SWINGARM	95	E12
SWITCH	52	D3
TACHOMETER	50	D2
TAILLIGHT	104	F5
TENSIONER	10	B5
THERMOSTAT	36	C6
TOOLS	112	F9
TOP BRIDGE	58	D6
TRANSMISSION	32	C4
TURN SIGNAL	102	F4
VALVE	8	B4
WATER PIPE	36	C6
WATER PUMP	19	B9
WHEEL, FR.	68	D11
WHEEL, RR.	72	E1
WIRE HARNESS	106	F6

GRID **D1**

SPEEDOMETER • TACHOMETER

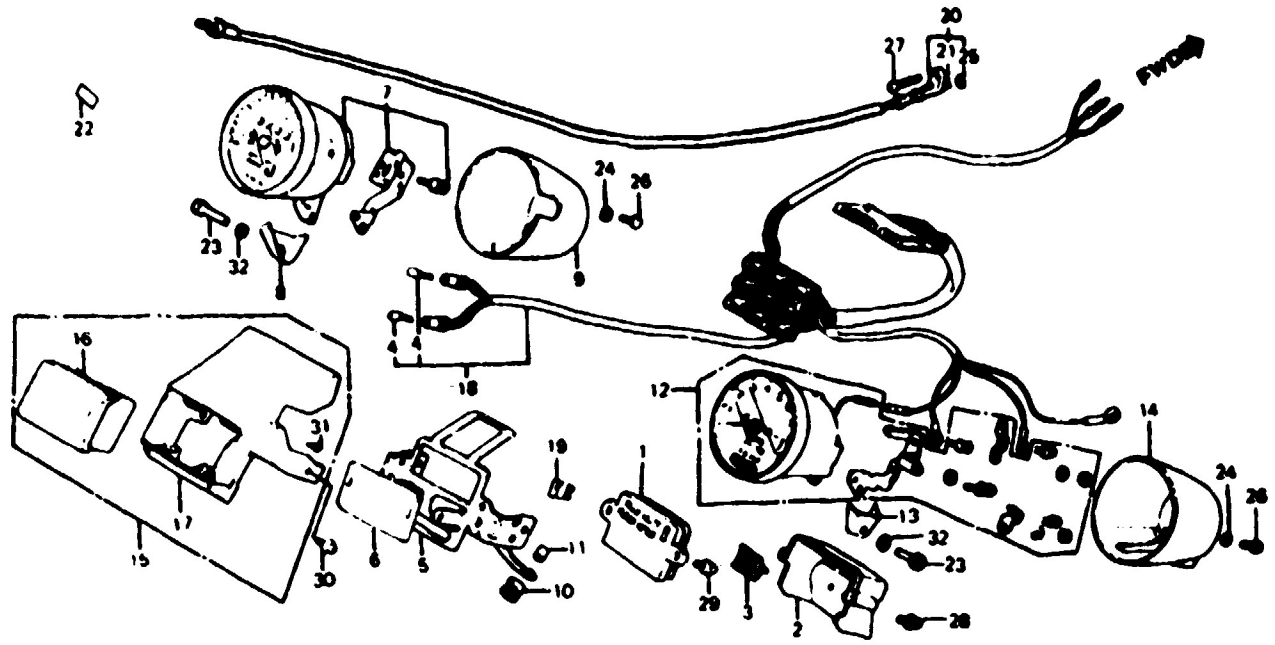

"CAUTION OR WARNING LABELS MUST BE ORDERED SEPARATELY WHEN APPLICABLE" F14ME8002

VT750C'83

BLOCK NO. F-2

Ref. No.	DESCRIPTION	FRAME SERIAL NUMBER FROM	FRAME SERIAL NUMBER TO	QTY REQ	PART NUMBER	HONDA CODE
1	BOX ASSY., JOINT	-------	-------	1	32450-ME9-003	1369024
2	COVER, JOINT BOX	-------	-------	1	32451-ME9-000	1369032
3	RUBBER, JOINT BOX COVER	-------	-------	1	32452-ME9-000	1413509
4	BULB, WEDGE BASE 12V3W	-------	-------	10	34908-MB0-003	1260611
5	STAY, METER	-------	-------	1	37120-ME9-009	1373307
6	RUBBER, INDICATOR	-------	-------	1	37121-ME9-009	1373810
7	SPEEDOMETER ASSY., COMBINATION (MPH/KPH)	-------	-------	1	37200-ME9-671	1369313
8	COVER, SPEEDOMETER STAY	-------	-------	1	37203-ME9-009	1373828
9	CASE, SPEEDOMETER UNDER	-------	-------	1	37204-ME9-009	1373836
10	GROMMET, METER SETTING	-------	-------	2	37205-ME9-009	1373844
11	COLLAR, METER SETTING	-------	-------	2	37206-ME9-009	1436054
12	TACHOMETER ASSY. (RPM)	-------	-------	1	37250-ME9-009	1369339
	TACHOMETER ASSY. (RPM)	-------	-------	1	37250-ME9-019	2333276
13	COVER, TACHOMETER STAY	-------	-------	1	37253-ME9-009	1373851
14	CASE, TACHOMETER LOWER	-------	-------	1	37254-ME9-009	1373869

© AMERICAN HONDA MOTOR CO. LTD 1983

VT750C'83 ENGINE NO.; RC14E-2000051 TO 2022747
VT750C'83 FRAME NO.; RC140-DM000035 TO DM022807

VT750C'83

BLOCK NO. F-2

Ref. No.	DESCRIPTION	FRAME SERIAL NUMBER FROM	FRAME SERIAL NUMBER TO	QTY REQ	PART NUMBER	HONDA CODE
15	INDICATOR ASSY.	-------	-------	1	37600-ME9-671	1369347
	INDICATOR ASSY.	-------	-------	1	37600-ME9-771	1562339
16	INDICATOR COMP.	-------	-------	1	37601-ME9-671	1373877
17	COVER, INDICATOR	-------	-------	1	37602-ME9-009	1373885
18	RUBBER ASSY., SOCKET	-------	-------	1	37619-ME9-671	1373893
19	FUSE B (15A)	-------	-------	5	38231-SA5-003	1131119
	FUSE, BLADE (15A)	-------	-------	5	98200-31500	1644244
20	CABLE ASSY., SPEEDOMETER	-------	-------	1	44830-ME9-000	1370063
21	CABLE, INNER	-------	-------	1	44831-KM1-000	2401396
	CABLE, INNER	-------	-------	1	44831-MB1-300	1248111
	CABLE, SPEEDOMETER INNER	-------	-------	1	44831-ME1-670	1756733
22	LABEL, BREAK-IN CAUTION	-------	-------	1	87523-413-710	0709741
23	BOLT, SOCKET, 6X20	-------	-------	2	90116-460-000	1689025
24	WASHER, WAVE	-------	-------	4	90401-ME9-009	1373919
25	O-RING, 6.8X1.9	-------	-------	1	91301-027-000	0018044
	O-RING, 6.8X1.9	-------	-------	1	91306-PJ4-000	2373447
	O-RING B, 6.8X1.9	-------	-------	1	91310-MC7-003	1218569
26	SCREW, PAN, 4X10	-------	-------	4	93500-04010-1B	1218593
27	SCREW, OVAL, 5X20	-------	-------	1	93700-05020-06	0768721
28	SCREW-WASHER, 5X35	-------	-------	2	93891-05035-07	0719500
	SCREW-WASHER, 5X35	-------	-------	2	93891-05035-17	1251750
29	SCREW-WASHER, 6X12	-------	-------	2	93891-06012-08	0660712
30	SCREW-WASHER, 4X10	-------	-------	2	93893-04010-07	1373927
31	SCREW, TAPPING, 3X10 (BLAUPUNKT)	-------	-------	4	93901-42220	1373935
32	WASHER, SPRING, 6MM	-------	-------	2	94111-06700	0294249

© AMERICAN HONDA MOTOR CO., LTD. 1983

CONTENTS

TITLE	PAGE	GRID
AIR CLEANER	86	E8
ALTERNATOR	17	B8
BATTERY	84	E7
BRAKE CALIPER, FR.	66	D10
BRAKE PANEL, RR.	70	D12
BRAKE PEDAL	90	E10
CABLE	52	D3
CAM CHAIN	10	B6
CAMSHAFT	8	B4
CARBURETOR ASSY	41	C8
CARBURETOR COMPONENT	42	C9
CHANGE PEDAL	90	E10
CLUTCH	13	B6
CLUTCH MASTER CYLINDER	56	D5
CRANKCASE	26	C1
CRANKCASE COVER, L.	17	B8
CRANKCASE COVER, R.	11	B5
CRANKSHAFT	28	C2
CROSS SHAFT	38	C7
CYLINDER	4	B2
CYLINDER	6	B3
CYLINDER HEAD COVER	2	B1
CYLINDER HEAD, FR.	4	B2
CYLINDER HEAD, RR.	6	B3
FENDER, FR.	62	D8
FENDER, RR.	100	F3
FINAL DRIVEN GEAR	73	E1
FORK, FR.	63	D8
FR. BRAKE MASTER CYLINDER	54	D4
FRAME	110	F8
FUEL PUMP	84	E7
FUEL TANK	77	E3
GASKET KIT A	44	C10
GASKET KIT B	46	C11
GEARSHIFT DRUM	34	C5
HANDLEBAR	58	D6
HEADLIGHT	48	D1
HORN	60	D7
IGNITION COIL	106	F6
MUFFLER	88	E9
OIL FILTER	23	B11
OIL PUMP	23	B11
PISTON	28	C2
RADIATOR	108	F7
SEAT	80	E5
SHOCK ABSORBER	98	F2
SIDE COVER	82	E6
SPARK UNIT	100	F3
SPEEDOMETER	50	D2
STAND	94	E12
STARTING DRIVEN GEAR	16	B8
STARTING MOTOR	21	B10
STEERING STEM	60	D7
STEP	92	E11
SWINGARM	95	E12
SWITCH	52	D3
TACHOMETER	50	D2
TAILLIGHT	104	F5
TENSIONER	10	B5
THERMOSTAT	36	C6
TOOLS	112	F9
TOP BRIDGE	58	D6
TRANSMISSION	32	C4
TURN SIGNAL	102	F4
VALVE	8	B4
WATER PIPE	36	C6
WATER PUMP	19	B9
WHEEL, FR.	68	D11
WHEEL, RR.	72	E1
WIRE HARNESS	106	F6

GRID **D2**

SWITCH • CABLE

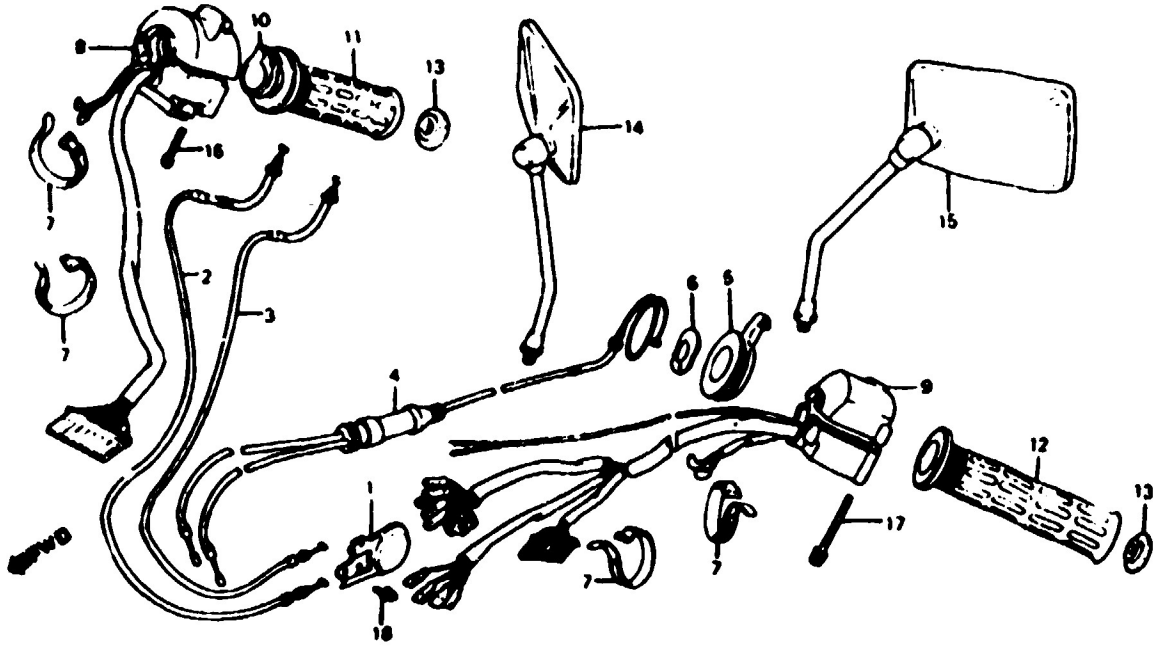

F14ME9003

VT750C'83

BLOCK NO. F-3

Ref. No.	DESCRIPTION	FRAME SERIAL NUMBER FROM	FRAME SERIAL NUMBER TO	QTY REQ	PART NUMBER	HONDA CODE
1	COVER, CARBURETOR	-------	-------	1	16111-ME9-000	1395912
2	CABLE COMP. A, THROTTLE	-------	-------	1	17910-ME5-000	1327105
	CABLE COMP. A, THROTTLE	-------	-------	1	17910-ME9-670	1367887
3	CABLE COMP. B, THROTTLE	-------	-------	1	17920-ME9-670	1367895
4	CABLE CHOKE 6MM (FOR A 6MM SYSTEM)	-------	-------	1	17950-ME9-305	1646298
	CABLE COMP., CHOKE (FOR A 8MM SYSTEM)	-------	-------	1	17950-ME9-670	1367903
5	LEVER, CHOKE (FOR A 6MM SYSTEM)	-------	-------	1	17962-MB0-000	1245141
	LEVER, CHOKE (FOR A 8MM SYSTEM)	-------	-------	1	17962-MB0-010	1510296
	LEVER, CHOKE	-------	-------	1	17962-ME8-000	1405794
6	WASHER, WAVE, 22MM (FOR A 6MM SYSTEM)	-------	-------	1	17964-ME9-000	1405810
7	BAND B1, WIRE	-------	-------	4	32161-404-000	0468819
8	SWITCH ASSY., STARTER KILL	-------	-------	1	35130-ME9-305	2660637

© AMERICAN HONDA MOTOR CO. LTD 1983

VT750C'83 ENGINE NO.; RC14E-2000051 TO 2022747
VT750C'83 FRAME NO.; RC140-DM000035 TO DM022807

VT750C'83

Ref. No.	BLOCK NO. F-3 DESCRIPTION	FRAME SERIAL NUMBER FROM	TO	QTY REQ	PART NUMBER	HONDA CODE
8	SWITCH ASSY., STARTER KILL	-------	-------	1	35130-ME9-670	1369248
9	SWITCH ASSY., TURN SIGNAL	-------	-------	1	35200-ME9-670	1369255
10	PIPE, THROTTLE GRIP	-------	-------	1	53141-300-010	0237586
11	GRIP, R. HANDLEBAR	-------	-------	1	53165-MB1-000	1249788
12	GRIP, L. HANDLEBAR	-------	-------	1	53166-MB1-000	1249796
13	CAP, GRIP RUBBER	-------	-------	2	53171-MB1-000	1249804
14	MIRROR, R.	-------	-------	1	88110-ME9-671	1436070
15	MIRROR, L.	-------	-------	1	88120-ME9-671	1436088
16	SCREW-WASHER, 5X30	-------	-------	2	93891-05030-07	0743047
17	SCREW-WASHER, 5X35	-------	-------	2	93891-05035-07	0719500
	SCREW-WASHER, 5X35	-------	-------	2	93891-05035-17	1251750
18	SCREW-WASHER, 4X6	-------	-------	2	93892-04006-00	0475046

© AMERICAN HONDA MOTOR CO. LTD. 1983

CONTENTS

TITLE	PAGE	GRID
AIR CLEANER	86	E8
ALTERNATOR	17	B6
BATTERY	84	E7
BRAKE CALIPER, FR.	66	D10
BRAKE PANEL, RR.	70	D12
BRAKE PEDAL	90	E10
CABLE	52	D3
CAM CHAIN	10	B5
CAMSHAFT	8	B4
CARBURETOR ASSY.	41	C8
CARBURETOR COMPONENT	42	C9
CHANGE PEDAL	90	E10
CLUTCH	13	B6
CLUTCH MASTER CYLINDER	56	D5
CRANKCASE	26	C1
CRANKCASE COVER, L.	17	B6
CRANKCASE COVER, R.	11	B5
CRANKSHAFT	28	C2
CROSS SHAFT	38	C7
CYLINDER	4	B2
CYLINDER	6	B3
CYLINDER HEAD COVER	2	B1
CYLINDER HEAD, FR.	4	B2
CYLINDER HEAD, RR.	6	B3
FENDER, FR.	62	D8
FENDER, RR.	100	F3
FINAL DRIVEN GEAR	73	E1
FORK, FR.	63	D8
FR. BRAKE MASTER CYLINDER	54	D4
FRAME	110	F8
FUEL PUMP	84	E7
FUEL TANK	77	E3
GASKET KIT A	44	C10
GASKET KIT B	46	C11
GEARSHIFT DRUM	34	C5
HANDLEBAR	58	D6
HEADLIGHT	48	D1
HORN	60	D7
IGNITION COIL	106	F6
MUFFLER	88	E9
OIL FILTER	23	B11
OIL PUMP	23	B11
PISTON	28	C2
RADIATOR	108	F7
SEAT	80	E5
SHOCK ABSORBER	98	F2
SIDE COVER	82	E6
SPARK UNIT	100	F3
SPEEDOMETER	50	D2
STAND	94	E12
STARTING DRIVEN GEAR	16	B8
STARTING MOTOR	21	B10
STEERING STEM	60	D7
STEP	92	E11
SWINGARM	95	E12
SWITCH	52	D3
TACHOMETER	50	D2
TAILLIGHT	104	F5
TENSIONER	10	B5
THERMOSTAT	36	C6
TOOLS	112	F9
TOP BRIDGE	58	D6
TRANSMISSION	32	C4
TURN SIGNAL	102	F4
VALVE	8	B4
WATER PIPE	36	C6
WATER PUMP	19	B9
WHEEL, FR.	68	D11
WHEEL, RR.	72	E1
WIRE HARNESS	106	F6

GRID **D3**

FR. BRAKE MASTER CYLINDER

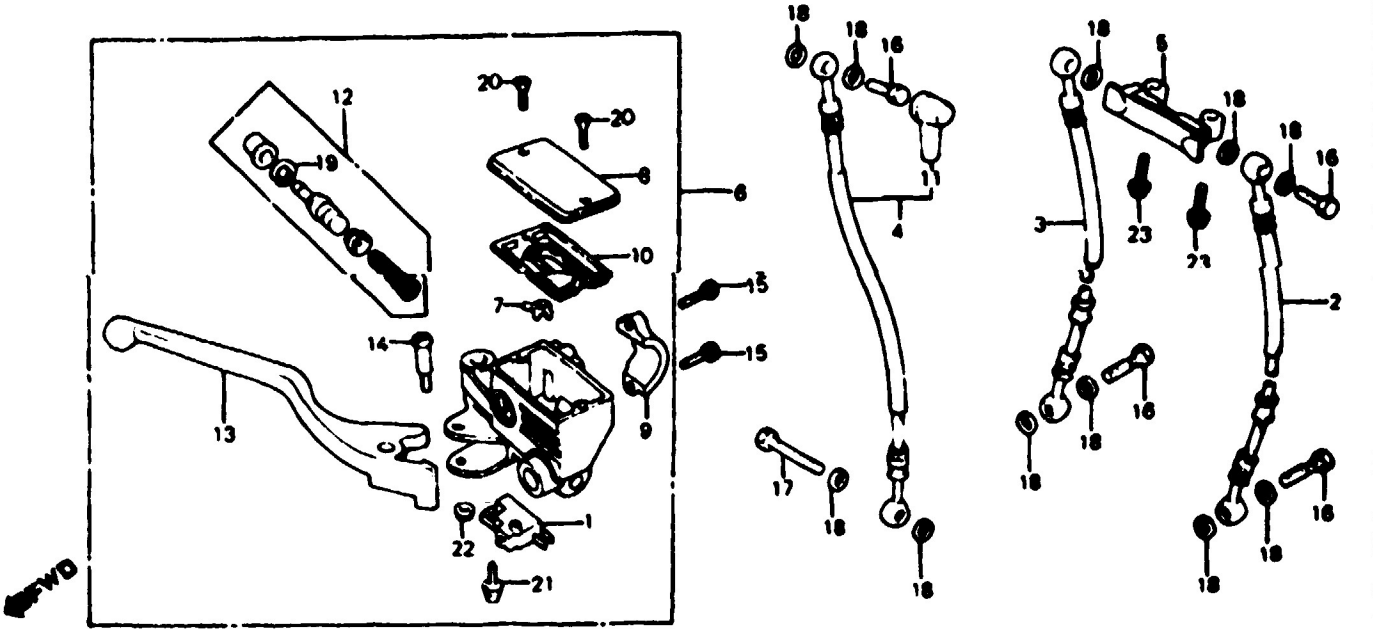

VT750C'83

BLOCK NO. F-4

Ref. No.	DESCRIPTION	FRAME SERIAL NUMBER FROM	FRAME SERIAL NUMBER TO	QTY REQ	PART NUMBER	HONDA CODE
1	SWITCH ASSY., FR. STOP	-------	-------	1	35340-MA5-671	0952267
	SWITCH ASSY., FR. STOP	-------	-------	1	35340-ML7-000	2409803
	SWITCH ASSY., FR. STOP	-------	-------	1	35340-MM5-600	2542421
2	HOSE, L. FR. BRAKE	-------	-------	1	45124-ME9-003	1370113
	HOSE, L. FR. BRAKE	-------	-------	1	45124-ME9-013	1871110
3	HOSE, R. FR. BRAKE	-------	-------	1	45125-ME9-003	1370121
	HOSE, R. FR. BRAKE	-------	-------	1	45125-ME9-013	1871128
4	HOSE, FR. BRAKE	-------	-------	1	45126-ME9-003	1413632
	HOSE, FR. BRAKE	-------	-------	1	45126-ME9-013	1871136
5	JOINT, 2-WAY	-------	-------	1	45127-ME9-000	1370147
6	CYLINDER ASSY., FR. BRAKE MASTER .	-------	-------	1	45500-ME9-673	1785716
7	PROTECTOR	-------	-------	1	45512-MA6-006	1235688
8	CAP	-------	-------	1	45540-MA6-621	1747146
9	HOLDER, MASTER CYLINDER	-------	-------	1	45517-MB0-006	1235738
10	DIAPHRAGM	-------	-------	1	45520-MA5-671	0952358
	DIAPHRAGM	-------	-------	1	45520-MA5-672	1547256

© AMERICAN HONDA MOTOR CO. LTD 1983

VT750C'83 ENGINE NO.; RC14E-2000051 TO 2022747
VT750C'83 FRAME NO.; RC140-DM000035 TO DM022807

VT750C'83

BLOCK NO. F-4

Ref. No.	DESCRIPTION	FRAME SERIAL NUMBER FROM	FRAME SERIAL NUMBER TO	QTY REQ	PART NUMBER	HONDA CODE
11	BOOT, MASTER CYLINDER	-------	-------	1	45522-422-000	0692822
12	CYLINDER SET, MASTER	-------	-------	1	45530-MA5-671	0952366
13	LEVER, R. HANDLEBAR	-------	-------	1	53175-KE8-006	1435320
	HANDLEBAR, COMP., R.	-------	-------	1	53175-MJ6-006	1776590
14	BOLT, R. CONTROL LEVER PIVOT	-------	-------	1	90114-MA5-671	0952416
15	BOLT, SOCKET, 6X23	-------	-------	2	90117-MB0-000	1237072
16	BOLT, OIL, 10X22	-------	-------	4	90145-KE8-000	1310994
	BOLT, OIL, 10X22	-------	-------	4	90145-KM3-750	2072775
	BOLT, OIL, 10X22	-------	-------	4	90145-VM0-000	1787043
	BOLT, OIL, 10X22	-------	-------	4	90145-961-010	1792548
17	BOLT, OIL, 10X34	-------	-------	1	90145-MG5-670	1311000
18	WASHER, OIL BOLT	-------	-------	11	90545-300-000	0189902
19	CIRCLIP	-------	-------	1	90651-MA5-671	1251404
20	SCREW, FLAT, 4X12	-------	-------	2	93600-04012-06	1218601
	SCREW, FLAT, 4X12	-------	-------	2	93600-04012-16	1237346
21	SCREW-WASHER, 4X12	-------	-------	1	93893-04012-08	0677989
	SCREW-WASHER, 4X12	-------	-------	1	93893-04012-18	0954412
22	NUT, FLANGE, 6MM	-------	-------	1	94050-06000	0471623
23	BOLT, FLANGE, 6X28	-------	-------	2	95700-06028-07	0811042
	BOLT, FLANGE, 6X28	-------	-------	2	95701-06028-07	2410934

© AMERICAN HONDA MOTOR CO., LTD. 1983

CONTENTS

TITLE	PAGE	GRID
AIR CLEANER	86	E8
ALTERNATOR	17	B6
BATTERY	84	E7
BRAKE CALIPER, FR.	66	D10
BRAKE PANEL, RR.	70	D12
BRAKE PEDAL	90	E10
CABLE	52	D3
CAM CHAIN	10	B5
CAMSHAFT	8	B4
CARBURETOR ASSY.	41	C8
CARBURETOR COMPONENT	42	C9
CHANGE PEDAL	90	E10
CLUTCH	13	B6
CLUTCH MASTER CYLINDER	56	D5
CRANKCASE	26	C1
CRANKCASE COVER, L.	17	B6
CRANKCASE COVER, R.	11	B5
CRANKSHAFT	28	C2
CROSS SHAFT	38	C7
CYLINDER	4	B2
CYLINDER	6	B3
CYLINDER HEAD COVER	2	B1
CYLINDER HEAD, FR.	4	B2
CYLINDER HEAD, RR.	6	B3
FENDER, FR.	62	D8
FENDER, RR.	100	F3
FINAL DRIVEN GEAR	73	E1
FORK, FR.	63	D8
FR. BRAKE MASTER CYLINDER	54	D4
FRAME	110	F8
FUEL PUMP	84	E7
FUEL TANK	77	E3
GASKET KIT A	44	C10
GASKET KIT B	46	C11
GEARSHIFT DRUM	34	C5
HANDLEBAR	58	D6
HEADLIGHT	48	D1
HORN	60	D7
IGNITION COIL	106	F6
MUFFLER	88	E9
OIL FILTER	23	B11
OIL PUMP	23	B11
PISTON	28	C2
RADIATOR	108	F7
SEAT	80	E5
SHOCK ABSORBER	98	F2
SIDE COVER	82	E6
SPARK UNIT	100	F3
SPEEDOMETER	50	D2
STAND	94	E12
STARTING DRIVEN GEAR	16	B6
STARTING MOTOR	21	B10
STEERING STEM	60	D7
STEP	92	E11
SWINGARM	96	E12
SWITCH	52	D3
TACHOMETER	50	D2
TAILLIGHT	104	F5
TENSIONER	10	B5
THERMOSTAT	36	C6
TOOLS	112	F9
TOP BRIDGE	58	D6
TRANSMISSION	32	C4
TURN SIGNAL	102	F4
VALVE	8	B4
WATER PIPE	36	C6
WATER PUMP	19	B9
WHEEL, FR.	68	D11
WHEEL, RR.	72	E1
WIRE HARNESS	106	F6

GRID **D4**

CLUTCH MASTER CYLINDER

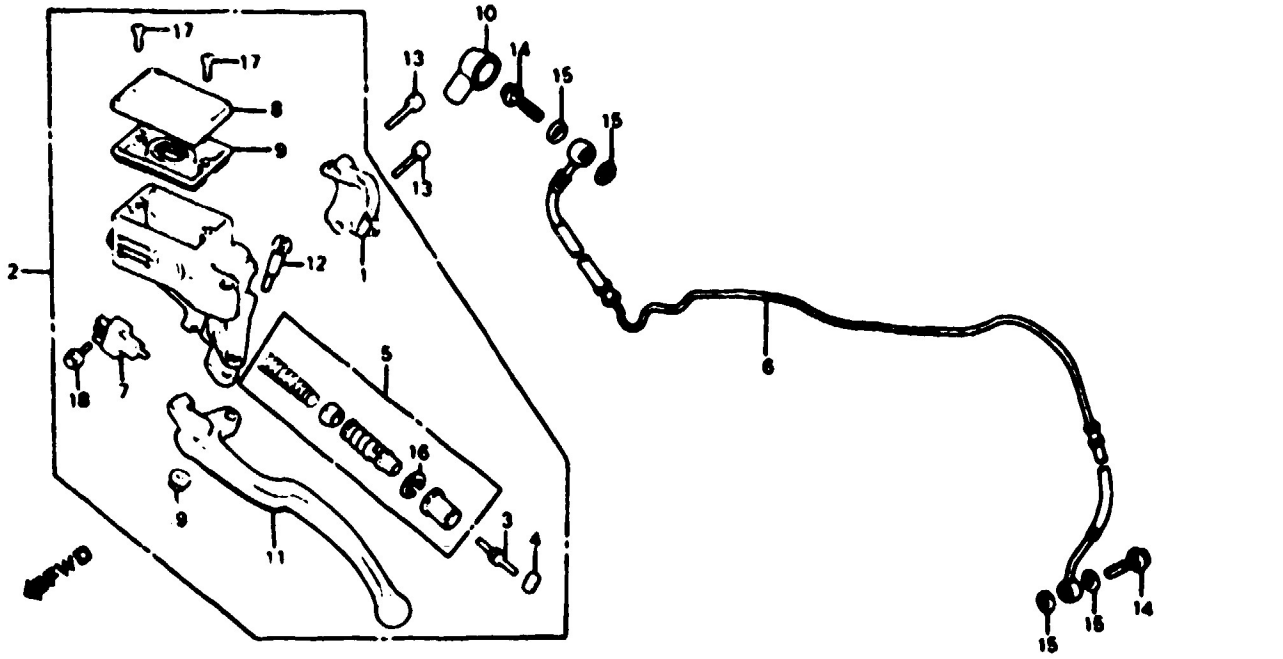

VT750C'83

Ref. No.	BLOCK NO. F-5 DESCRIPTION	FRAME SERIAL NUMBER FROM	TO	QTY REQ	PART NUMBER	HONDA CODE
1	HOLDER, CHOKE LEVER (FOR A 6MM SYSTEM)	-------	-------	1	17963-MB0-000	1245158
	HOLDER, CHOKE LEVER (FOR A 8MM SYSTEM)	-------	-------	1	17963-MB0-010	1510304
	HOLDER, CHOKE LEVER	-------	-------	1	17963-ME8-000	1405802
2	CLUTCH MASTER CYLINDER (FOR A 6MM SYSTEM)	-------	-------	1	22880-ME9-315	1785641
	CYLINDER ASSY., CLUTCH MASTER (FOR A 8MM SYSTEM)	-------	-------	1	22880-ME9-673	1785765
3	ROD, PUSH	-------	-------	1	22884-MB0-006	1245729
4	BUSH	-------	-------	1	22885-MB0-006	1245737
5	PISTON SET, CLUTCH MASTER CYLINDER	-------	-------	1	22886-MB0-305	1245745
6	PIPE COMP., CLUTCH	-------	-------	1	22900-ME9-003	1413426
	PIPE COMP., CLUTCH	-------	-------	1	22900-ME9-013	1870856
7	SWITCH ASSY., CLUTCH	-------	-------	1	35330-MB0-003	1246859
8	CAP	-------	-------	1	45540-MA6-621	1747146

© AMERICAN HONDA MOTOR CO., LTD. 1983

VT750C'83 ENGINE NO.; RC14E-2000051 TO 2022747
VT750C'83 FRAME NO.; RC140-DM000035 TO DM022807

VT750C'83

Ref. No.	BLOCK NO. F-5 DESCRIPTION	FRAME SERIAL NUMBER FROM	TO	QTY REQ	PART NUMBER	HONDA CODE
9	DIAPHRAGM	-------	-------	1	45520-MA5-671	0952358
	DIAPHRAGM	-------	-------	1	45520-MA5-672	1547256
10	BOOT, MASTER CYLINDER	-------	-------	1	45522-422-000	0692822
11	LEVER COMP., L. HANDLE	-------	-------	1	53178-KE8-006	1373992
12	BOLT, R. CONTROL LEVER PIVOT	-------	-------	1	90114-MA5-671	0952416
13	BOLT, SOCKET, 6X23	-------	-------	2	90117-MB0-000	1237072
14	BOLT, OIL, 10X22	-------	-------	2	90145-KE8-000	1310994
	BOLT, OIL, 10X22	-------	-------	2	90145-KM3-750	2072775
	BOLT, OIL, 10X22	-------	-------	2	90145-VM0-000	1787043
	BOLT, OIL, 10X22	-------	-------	2	90145-961-01?	1792548
15	WASHER, OIL BOLT	-------	-------	4	90545-300-000	0189902
16	CIRCLIP, INTERNAL, 18MM (NISSIN)	-------	-------	1	90651-377-003	0400572
17	SCREW, FLAT, 4X12	-------	-------	2	93600-04012-06	1218601
	SCREW, FLAT, 4X12	-------	-------	2	93600-04012-16	1237346
18	SCREW-WASHER, 4X12	-------	-------	1	93893-04012-07	1374008
	SCREW-WASHER, 4X12	-------	-------	1	93893-04012-17	1237353
19	NUT, FLANGE, 6MM	-------	-------	1	94050-06000	0471623

© AMERICAN HONDA MOTOR CO. LTD. 1983

CONTENTS

TITLE	PAGE	GRID
AIR CLEANER	86	E8
ALTERNATOR	17	B8
BATTERY	84	E7
BRAKE CALIPER, FR.	66	D10
BRAKE PANEL, RR.	70	D12
BRAKE PEDAL	90	E10
CABLE	52	D3
CAM CHAIN	10	B6
CAMSHAFT	8	B4
CARBURETOR ASSY.	41	C8
CARBURETOR COMPONENT	42	C9
CHANGE PEDAL	90	E10
CLUTCH	13	B6
CLUTCH MASTER CYLINDER	56	D6
CRANKCASE	26	C1
CRANKCASE COVER, L.	17	B8
CRANKCASE COVER, R.	11	B5
CRANKSHAFT	28	C2
CROSS SHAFT	36	C7
CYLINDER	4	B2
CYLINDER	6	B3
CYLINDER HEAD COVER	2	B1
CYLINDER HEAD, FR.	4	B2
CYLINDER HEAD, RR.	6	B3
FENDER, FR.	62	D8
FENDER, RR.	100	F3
FINAL DRIVEN GEAR	73	E1
FORK, FR.	63	D8
FR. BRAKE MASTER CYLINDER	54	D4
FRAME	110	F8
FUEL PUMP	84	E7
FUEL TANK	77	E3
GASKET KIT A	44	C10
GASKET KIT B	46	C11
GEARSHIFT DRUM	34	C5
HANDLEBAR	58	D6
HEADLIGHT	48	D1
HORN	80	D7
IGNITION COIL	108	F6
MUFFLER	88	E9
OIL FILTER	23	B11
OIL PUMP	23	B11
PISTON	28	C2
RADIATOR	106	F7
SEAT	60	E5
SHOCK ABSORBER	98	F2
SIDE COVER	82	E6
SPARK UNIT	100	F3
SPEEDOMETER	50	D2
STAND	94	E12
STARTING DRIVEN GEAR	16	B8
STARTING MOTOR	21	B10
STEERING STEM	60	D7
STEP	92	E11
SWINGARM	95	E12
SWITCH	52	D3
TACHOMETER	50	D2
TAILLIGHT	104	F5
TENSIONER	10	B5
THERMOSTAT	36	C6
TOOLS	112	F9
TOP BRIDGE	58	D6
TRANSMISSION	32	C4
TURN SIGNAL	102	F4
VALVE	8	B4
WATER PIPE	36	C6
WATER PUMP	19	B9
WHEEL, FR.	68	D11
WHEEL, RR.	72	E1
WIRE HARNESS	108	F6

GRID D5

HANDLEBAR • TOP BRIDGE

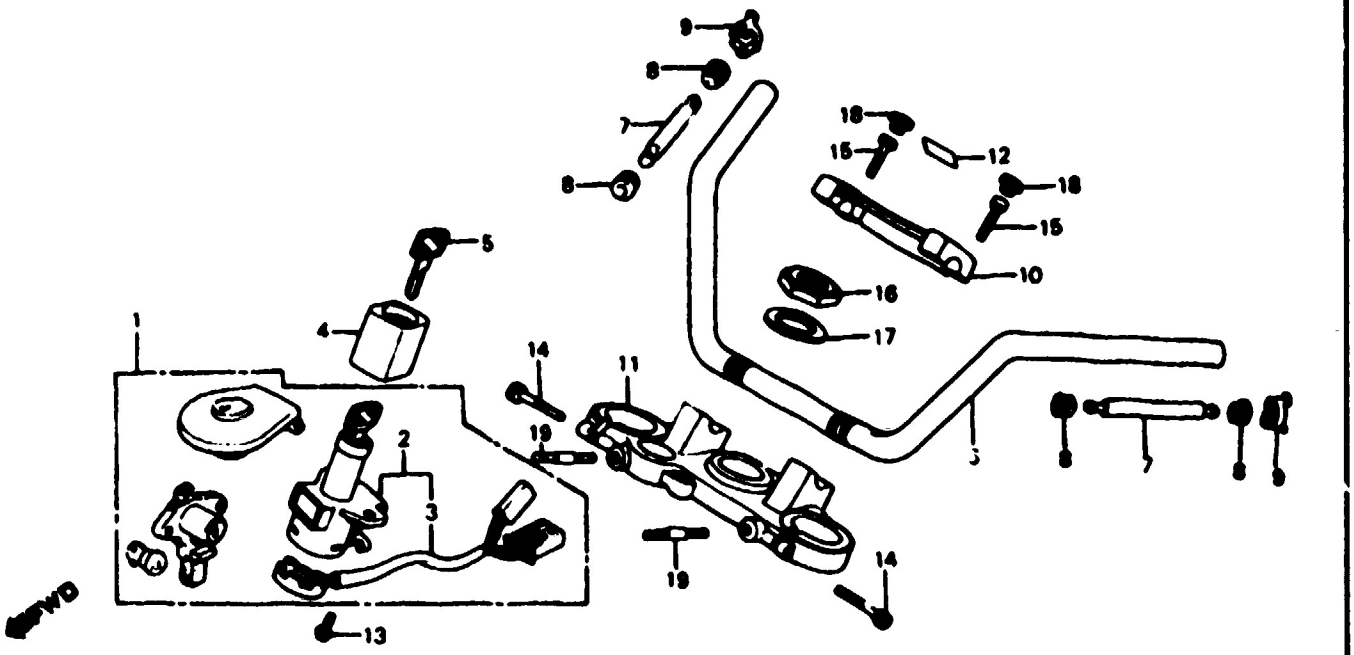

"CAUTION OR WARNING LABELS MUST BE ORDERED SEPARATELY WHEN APPLICABLE" F14ME8006

VT750C'83

BLOCK NO. F-6

Ref. No.	DESCRIPTION	FRAME SERIAL NUMBER FROM	FRAME SERIAL NUMBER TO	QTY REQ	PART NUMBER	HONDA CODE
1	KEY SET	-------	-------	1	35010-ME9-000	1369214
	KEY SET	-------	-------	1	35010-ME9-010	1838077
	KEY SET	-------	-------	1	35010-ME9-020	1838085
	KEY SET	-------	-------	1	35010-ME9-030	2609477
2	SWITCH ASSY., COMBINATION & LOCK	-------	-------	1	35100-ME9-000	1369222
	SWITCH ASSY., COMBINATION & LOCK	-------	-------	1	35100-MF8-000	1491273
3	BASE COMP., CONTACT	-------	-------	1	35101-ME9-007	1374016
4	COVER, COMBINATION SWITCH	-------	-------	1	35105-ME9-003	1392166
	COVER, COMBINATION SWITCH	-------	-------	1	35105-MK7-000	2314912
5	KEY, BLANK (TYPE 1)	-------	-------	(1)	35121-KW3-771	3029840
	KEY, BLANK (TYPE 1)	-------	-------	(1)	35121-MA6-811	1246750
	KEY, BLANK (TYPE 2)	-------	-------	(1)	35122-KW3-771	3029857
	KEY, BLANK (TYPE 2)	-------	-------	(1)	35122-MA6-811	1246768
6	HANDLEBAR	-------	-------	1	53100-ME9-670	1370501
	HANDLEBAR	-------	-------	1	53100-ME9-671	4067153
7	WEIGHT, HANDLEBAR	-------	-------	2	53105-425-830	0823914

© AMERICAN HONDA MOTOR CO., LTD. 1983

VT750C'83 ENGINE NO.; RC14E-2000051 TO 2022747
VT750C'83 FRAME NO.; RC140-DM000035 TO DM022807

VT750C'83

BLOCK NO. F-6

Ref. No.	DESCRIPTION	FRAME SERIAL NUMBER FROM	FRAME SERIAL NUMBER TO	QTY REQ	PART NUMBER	HONDA CODE
8	RUBBER, HANDLEBAR WEIGHT	-------	-------	4	53107-425-000	0718908
9	RING, HANDLE WEIGHT SNAP	-------	-------	2	53108-MK4-000	2483824
	RING, HANDLE WEIGHT SNAP	-------	-------	2	53108-415-004	0670018
10	HOLDER, HANDLE UPPER	-------	-------	1	53131-ME9-000	1370519
	HOLDER, HANDLE UPPER	-------	-------	1	53131-ME9-010	1871169
11	BRIDGE, FORK TOP	-------	-------	1	53230-ME9-000	1370535
	BRIDGE, FORK TOP	-------	-------	1	53230-ME9-610	4145488
12	LABEL, FR. FORK CAUTION	-------	-------	1	87517-MB1-770	1366202
13	BOLT, FLANGE, 8X19	-------	-------	2	90104-MJ1-000	1735307
	BOLT, FLANGE, 8X19	-------	-------	2	90105-MA6-000	1250893
14	BOLT, SOCKET, 7X32	-------	-------	2	90151-MB1-000	1251099
15	BOLT, SOCKET, 8X32	-------	-------	4	90154-ME9-000	1371137
16	NUT, STEERING STEM	-------	-------	1	90304-425-000	0719401
17	WASHER, STEERING STEM	-------	-------	1	90503-425-000	0719443
18	CAP, SOCKET BOLT, 8MM	-------	-------	4	91455-MB0-010	2332187
19	BOLT, STUD, 8X40	-------	-------	2	92700-08040-1B	1483916
	BOLT, STUD, 2.6X60	-------	-------	2	92900-08028-1B	1735596

© AMERICAN HONDA MOTOR CO., LTD. 1983

CONTENTS

TITLE	PAGE	GRID
AIR CLEANER	86	E8
ALTERNATOR	17	B8
BATTERY	84	E7
BRAKE CALIPER, FR.	66	D10
BRAKE PANEL, RR.	70	D12
BRAKE PEDAL	90	E10
CABLE	52	D3
CAM CHAIN	10	B5
CAMSHAFT	8	B4
CARBURETOR ASSY.	41	C8
CARBURETOR COMPONENT	42	C8
CHANGE PEDAL	90	E10
CLUTCH	13	B6
CLUTCH MASTER CYLINDER	56	D5
CRANKCASE	26	C1
CRANKCASE COVER, L.	17	B8
CRANKCASE COVER, R.	11	B5
CRANKSHAFT	28	C2
CROSS SHAFT	38	C7
CYLINDER	4	B2
CYLINDER	6	B3
CYLINDER HEAD COVER	2	B1
CYLINDER HEAD, FR.	4	B2
CYLINDER HEAD, RR.	6	B3
FENDER, FR.	62	D8
FENDER, RR.	100	F3
FINAL DRIVEN GEAR	73	C1
FORK, FR.	63	D8
FR. BRAKE MASTER CYLINDER	54	D4
FRAME	110	F8
FUEL PUMP	84	E7
FUEL TANK	77	E3
GASKET KIT A	44	C10
GASKET KIT B	46	C11
GEARSHIFT DRUM	34	C5
HANDLEBAR	58	D6
HEADLIGHT	48	D1
HORN	60	D7
IGNITION COIL	106	F6
MUFFLER	88	E9
OIL FILTER	23	B11
OIL PUMP	23	B11
PISTON	28	C2
RADIATOR	108	F7
SEAT	80	E5
SHOCK ABSORBER	98	F2
SIDE COVER	82	E6
SPARK UNIT	100	F3
SPEEDOMETER	50	D2
STAND	94	E12
STARTING DRIVEN GEAR	16	B8
STARTING MOTOR	21	B10
STEERING STEM	60	D7
STEP	92	E11
SWINGARM	95	E12
SWITCH	52	D3
TACHOMETER	50	D2
TAILLIGHT	104	F5
TENSIONER	10	B5
THERMOSTAT	36	C8
TOOLS	112	F9
TOP BRIDGE	58	D6
TRANSMISSION	32	C4
TURN SIGNAL	102	F4
VALVE	8	B4
WATER PIPE	36	C8
WATER PUMP	19	B9
WHEEL, FR.	68	D11
WHEEL, RR.	72	E1
WIRE HARNESS	106	F6

GRID **D6**

STEERING STEM • HORN

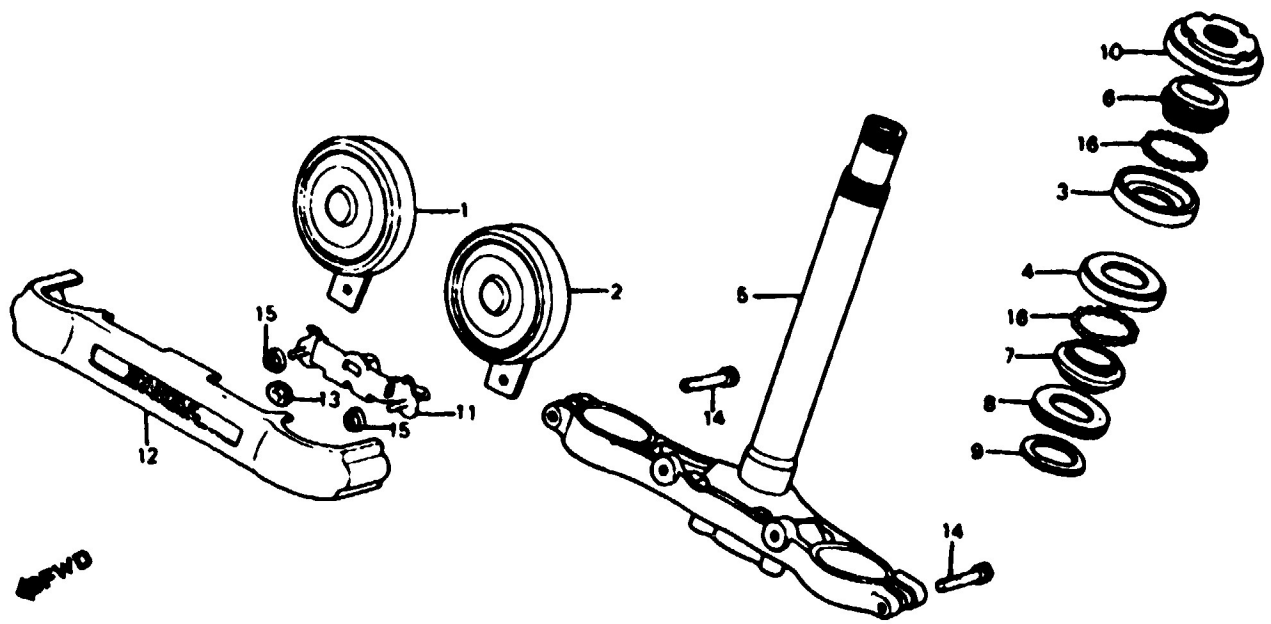

F14ME9007

VT750C'83

BLOCK NO. F-7

Ref. No.	DESCRIPTION	FRAME SERIAL NUMBER FROM	FRAME SERIAL NUMBER TO	QTY REQ	PART NUMBER	HONDA CODE
1	HORN ASSY. (HIGH)	-------	-------	1	38110-ME9-004	1436179
	HORN ASSY. (HIGH)	-------	-------	1	38110-ME9-612	3218302
2	HORN ASSY. (LOW)	-------	-------	1	38120-ME9-004	1436195
	HORN ASSY. (LOW)	-------	-------	1	38120-ME9-612	3306586
3	RACE, STEERING TOP BALL	-------	-------	1	50301-268-000	0101121
	RACE, STEERING TOP BALL	-------	-------	1	50301-268-010	1977669
4	RACE, STEERING LOWER BALL	-------	-------	1	50302-268-000	0101147
	RACE, STEERING LOWER	-------	-------	1	50302-268-010	1977081
5	STEM COMP., STEERING	-------	-------	1	53200-ME9-000	1370527
6	RACE, STEERING TOP CONE	-------	-------	1	53211-268-000	0102251
	RACE, STEERING TOP CONE	-------	-------	1	53211-268-010	1977677
7	RACE, STEERING LOWER CONE	-------	-------	1	53212-250-000	0102269
	RACE, STEERING LOWER CONE	-------	-------	1	53212-250-010	1977131
8	DUST SEAL, STEERING HEAD	-------	-------	1	53214-250-000	0367482
9	WASHER, STEERING HEAD DUST SEAL ..	-------	-------	1	53215-250-000	0046052
10	THREAD COMP., STEERING HEAD TOP ..	-------	-------	1	53220-KE8-010	1437136

© AMERICAN HONDA MOTOR CO., LTD. 1983

VT750C'83 ENGINE NO.; RC14E-2000051 TO 2022747
VT750C'83 FRAME NO.; RC140-DM000035 TO DM022807

VT750C'83

Ref. No.	BLOCK NO. F-7 DESCRIPTION	FRAME SERIAL NUMBER FROM	TO	QTY REQ	PART NUMBER	HONDA CODE
10	THREAD COMP., STEERING HEAD TOP ..	-------	-------	1	53220-ME9-000	1401421
11	STAY, LOWER COVER	-------	-------	1	61400-ME9-000	1370584
	STAY, LOWER COVER	-------	-------	1	61400-ME9-770	1537026
12	COVER, LOWER	-------	-------	1	61405-ME9-000	1434356
13	GROMMET, AIR CLEANER CASE	-------	-------	1	83551-300-000	0204990
14	BOLT, SOCKET, 10X30	-------	-------	2	90152-MB0-000	1251107
15	NUT, FLANGE, 6MM	-------	-------	2	94050-06080	0612689
16	BALL, STEEL, #8 (1/4)	-------	-------	37	96211-08000	0079905

© AMERICAN HONDA MOTOR CO., LTD. 1983

CONTENTS

TITLE	PAGE	GRID
AIR CLEANER	86	E8
ALTERNATOR	17	B8
BATTERY	84	E7
BRAKE CALIPER, FR.	66	D10
BRAKE PANEL, RR.	70	D12
BRAKE PEDAL	90	E10
CABLE	52	D3
CAM CHAIN	10	B5
CAMSHAFT	8	B4
CARBURETOR ASSY.	41	C8
CARBURETOR COMPONENT	42	C9
CHANGE PEDAL	90	E10
CLUTCH	13	B6
CLUTCH MASTER CYLINDER	56	D5
CRANKCASE	26	C1
CRANKCASE COVER, L.	17	B8
CRANKCASE COVER, R.	11	B5
CRANKSHAFT	28	C2
CROSS SHAFT	38	C7
CYLINDER	4	B2
CYLINDER	6	B3
CYLINDER HEAD COVER	2	B1
CYLINDER HEAD, FR.	4	B2
CYLINDER HEAD, RR.	6	B3
FENDER, FR.	62	D8
FENDER, RR.	100	F3
FINAL DRIVEN GEAR	73	E1
FORK, FR.	63	D8
FR. BRAKE MASTER CYLINDER	54	D4
FRAME	110	F8
FUEL PUMP	84	E7
FUEL TANK	77	E3
GASKET KIT A	44	C10
GASKET KIT B	46	C11
GEARSHIFT DRUM	34	C5
HANDLEBAR	58	D6
HEADLIGHT	48	D1
HORN	80	D7
IGNITION COIL	106	F6
MUFFLER	88	E9
OIL FILTER	23	B11
OIL PUMP	23	B11
PISTON	28	C2
RADIATOR	108	F7
SEAT	80	E5
SHOCK ABSORBER	98	F2
SIDE COVER	82	E6
SPARK UNIT	100	F3
SPEEDOMETER	50	D2
STAND	94	E12
STARTING DRIVEN GEAR	16	B8
STARTING MOTOR	21	B10
STEERING STEM	60	D7
STEP	92	E11
SWINGARM	96	E12
SWITCH	52	D3
TACHOMETER	50	D2
TAILLIGHT	104	F5
TENSIONER	10	B5
THERMOSTAT	36	C6
TOOLS	112	F9
TOP BRIDGE	58	D6
TRANSMISSION	32	C4
TURN SIGNAL	102	F4
VALVE	8	B4
WATER PIPE	36	C6
WATER PUMP	19	B9
WHEEL, FR.	68	D11
WHEEL, RR.	72	E1
WIRE HARNESS	106	F6

GRID **D7**

FRONT FENDER

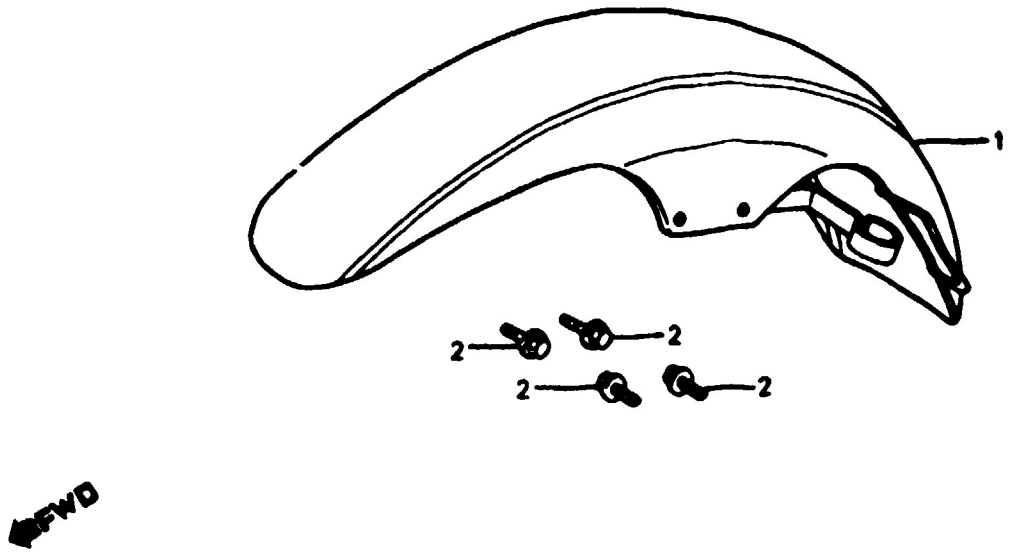

F14ME9008

Ref. No.	DESCRIPTION	FRAME SERIAL NUMBER FROM	FRAME SERIAL NUMBER TO	QTY REQ	PART NUMBER	HONDA CODE
	VT750C'83 BLOCK NO. F-8					
1	FENDER, FR.	-------	-------	1	61100-ME9-000	1370543
2	BOLT, FLANGE, 6X12	-------	-------	4	95700-06012-08	0252254
	BOLT, FLANGE, 6X12	-------	-------	4	95701-06012-08	2170793

© AMERICAN HONDA MOTOR CO. LTD. 1983

VT750C'83 ENGINE NO.; RC14E-2000051 TO 2022747
VT750C'83 FRAME NO.; RC140-DM000035 TO DM022807

FRONT FORK

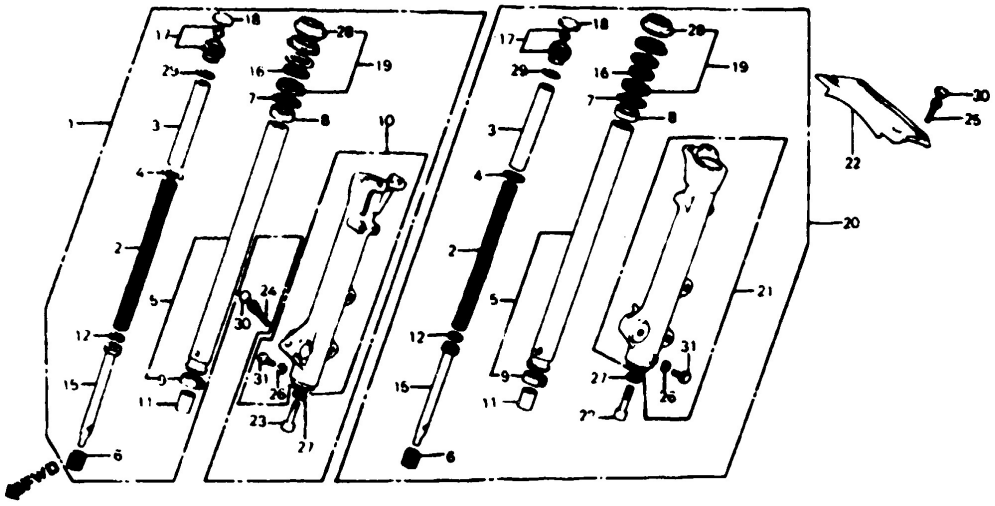

F14ME9009

VT750C'83

BLOCK NO. F-9

Ref. No.	DESCRIPTION	FRAME SERIAL NUMBER FROM	FRAME SERIAL NUMBER TO	QTY REQ	PART NUMBER	HONDA CODE
1	FORK ASSY., R. FR.	-------	-------	1	51400-ME9-003	1374040
	FORK ASSY., R. FR.	-------	-------	1	51400-ME9-013	1871144
	FORK ASSY., R. FR.	-------	-------	1	51400-ME9-023	2537249
2	SPRING, FR. FORK	-------	-------	2	51401-ME9-003	1374057
3	COLLAR, SPRING	-------	-------	2	51402-ME9-003	1374065
4	PLATE, SPRING JOINT	-------	-------	2	51403-ME5-003	1374073
5	PIPE COMP., FR. FORK	-------	-------	2	51410-ME9-003	1374081
	PIPE COMP., FR. FORK	-------	-------	2	51410-ME9-013	2647741
6	SPRING, REBOUND	-------	-------	2	51411-ME5-003	1378124
7	RING, BACK UP	-------	-------	2	51412-463-003	0884114
8	BUSH, FORK PIPE	-------	-------	2	51414-463-003	0884130
9	SLEEVE, SHOCK PIPE	-------	-------	2	51415-463-003	0884148
10	CASE COMP., R. LOWER	-------	-------	1	51421-ME9-003	1374107
11	PIECE, OIL LOCKING	-------	-------	2	51432-438-671	1052588
12	RING, PISTON	-------	-------	2	51437-ME5-003	1378132
15	PIPE, SEAT	-------	-------	2	51440-ME9-003	1374123

© AMERICAN HONDA MOTOR CO., LTD. 1983

CONTENTS

TITLE	PAGE	GRID
AIR CLEANER	86	E8
ALTERNATOR	17	B8
BATTERY	84	E7
BRAKE CALIPER, FR.	66	D10
BRAKE PANEL, RR.	70	D12
BRAKE PEDAL	90	E10
CABLE	52	D3
CAM CHAIN	10	B5
CAMSHAFT	8	B4
CARBURETOR ASSY.	41	C8
CARBURETOR COMPONENT	42	C9
CHANGE PEDAL	90	E10
CLUTCH	13	B6
CLUTCH MASTER CYLINDER	56	D5
CRANKCASE	26	C1
CRANKCASE COVER, L.	17	B8
CRANKCASE COVER, R.	11	B5
CRANKSHAFT	28	C2
CROSS SHAFT	38	C7
CYLINDER	4	B2
CYLINDER	6	B3
CYLINDER HEAD COVER	2	B1
CYLINDER HEAD, FR.	4	B2
CYLINDER HEAD, RR.	6	B3
FENDER, FR.	62	D8
FENDER, RR.	100	F3
FINAL DRIVEN GEAR	73	E1
FORK, FR.	63	D8
FR. BRAKE MASTER CYLINDER	54	D4
FRAME	110	F8
FUEL PUMP	84	E7
FUEL TANK	77	E3
GASKET KIT A	44	C10
GASKET KIT B	46	C11
GEARSHIFT DRUM	34	C5
HANDLEBAR	58	D6
HEADLIGHT	48	D1
HORN	60	D7
IGNITION COIL	106	F6
MUFFLER	88	E9
OIL FILTER	23	B11
OIL PUMP	23	B11
PISTON	28	C2
RADIATOR	108	F7
SEAT	80	E5
SHOCK ABSORBER	98	F2
SIDE COVER	82	E6
SPARK UNIT	100	F3
SPEEDOMETER	50	D2
STAND	94	E12
STARTING DRIVEN GEAR	16	B8
STARTING MOTOR	21	B10
STEERING STEM	60	D7
STEP	92	E11
SWINGARM	95	E12
SWITCH	52	D3
TACHOMETER	50	D2
TAILLIGHT	104	F5
TENSIONER	10	B5
THERMOSTAT	36	C6
TOOLS	112	F9
TOP BRIDGE	58	D6
TRANSMISSION	32	C4
TURN SIGNAL	102	F4
VALVE	8	B4
WATER PIPE	36	C6
WATER PUMP	19	B9
WHEEL, FR.	68	D11
WHEEL, RR.	72	E1
WIRE HARNESS	106	F6

GRID **D8**

FRONT FORK

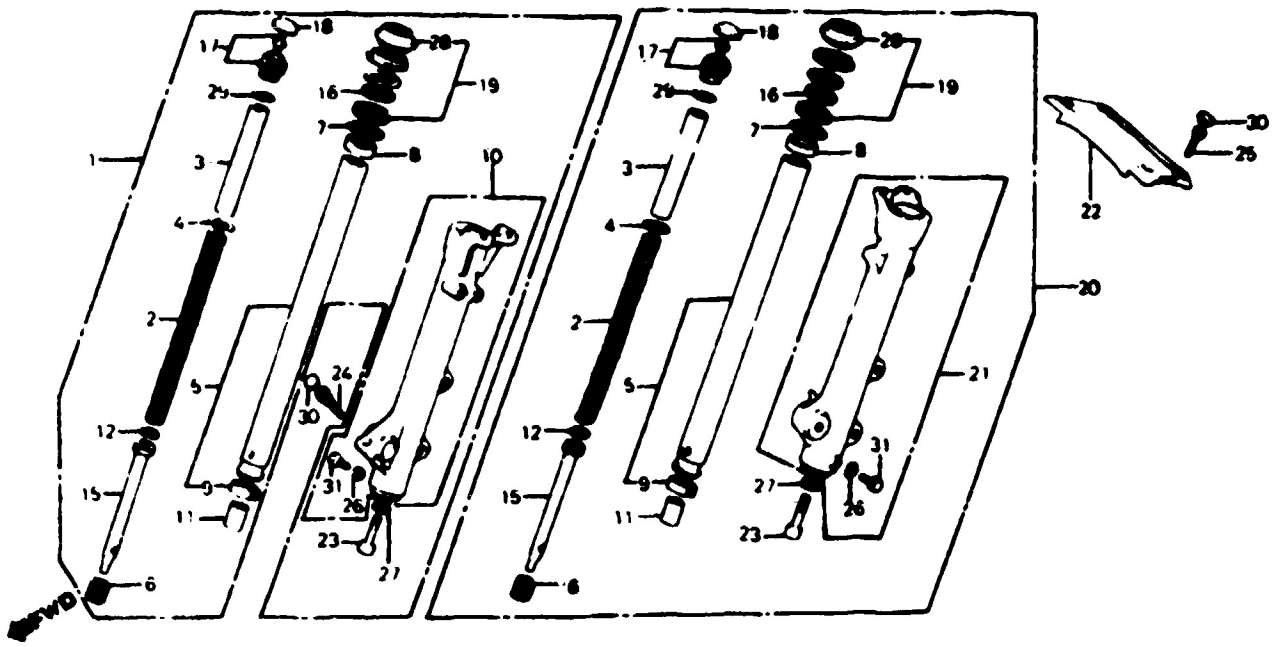

VT750C'83

BLOCK NO. F-9

Ref. No.	DESCRIPTION	FRAME SERIAL NUMBER FROM	FRAME SERIAL NUMBER TO	QTY REQ	PART NUMBER	HONDA CODE
16	CIRCLIP, INTERNAL	-------	-------	2	51447-463-003	0884197
17	BOLT ASSY., FR. FORK	-------	-------	2	51450-ME5-003	1374131
18	CAP, AIR VALVE	-------	-------	2	51457-MG1-003	1289404
19	SEAL SET, FR. FORK	-------	-------	2	51490-MB9-781	1289412
	SEAL SET, FR. FORK	-------	-------	2	51490-MB9-782	1837574
	SEAL SET, FR. FORK	-------	-------	2	51490-MG2-305	1447424
	SEAL SET, FR. FORK	-------	-------	2	51490-463-305	1052620
20	FORK ASSY., L. FR.	-------	-------	1	51500-ME9-003	1370451
	FORK ASSY., L. FR.	-------	-------	1	51500-ME9-013	1871151
21	CASE COMP., L. LOWER	-------	-------	1	51521-ME9-003	1374149
22	STABILIZER, FR. SHOCK	-------	-------	1	53240-MB1-010	1436302
	STABILIZER, FR. SHOCK	-------	-------	1	53240-MB1-020	1671023
	STABILIZER, FR. SHOCK	-------	-------	1	53240-MB1-030	1744226
	STABILIZER, FR. SHOCK	-------	-------	1	53240-MB1-040	2051290
	STABILIZER, FR. SHOCK	-------	-------	1	53240-MB1-050	2753770
23	BOLT, SOCKET, 8MM	-------	-------	2	90116-ME1-671	1250984

© AMERICAN HONDA MOTOR CO. LTD. 1983

VT750C'83 ENGINE NO.; RC14E-2000051 TO 2022747
VT750C'83 FRAME NO.; RC140-DM000035 TO DM022807

VT750C '83

BLOCK NO. F-9

Ref. No.	DESCRIPTION	FRAME SERIAL NUMBER FROM	FRAME SERIAL NUMBER TO	QTY REQ	PART NUMBER	HONDA CODE
24	BOLT, SOCKET, 8X28	-------	-------	1	90152-ME5-000	1330927
25	BOLT, SOCKET, 8X17	-------	-------	4	90153-MB0-000	1251123
	BOLT, SOCKET, 8X17	-------	-------	4	90153-MB0-405	4222808
26	GASKET, FR. FORK DRAIN VALVE	-------	-------	2	90543-273-000	0052209
27	WASHER, SPECIAL, 8MM	-------	-------	2	90544-283-000	0259457
28	DUST SEAL	-------	-------	2	91254-463-003	0886234
29	O-RING, 29.2X3.5	-------	-------	2	91356-MA3-661	1374156
30	CAP, SOCKET BOLT, 8MM	-------	-------	5	91455-MB0-010	2332187
31	BOLT, HEX., 6X8	-------	-------	2	92000-06008-0A	0724377
	BOLT, HEX., 6X8	-------	-------	2	92101-06008-0A	2504868

© AMERICAN HONDA MOTOR CO. LTD. 1983

CONTENTS

TITLE	PAGE	GRID
AIR CLEANER	86	E8
ALTERNATOR	17	B8
BATTERY	84	E7
BRAKE CALIPER, FR.	66	D10
BRAKE PANEL, RR.	70	D12
BRAKE PEDAL	90	E10
CABLE	52	D3
CAM CHAIN	10	B5
CAMSHAFT	8	B4
CARBURETOR ASSY.	41	C8
CARBURETOR COMPONENT	42	C9
CHANGE PEDAL	90	E10
CLUTCH	13	B6
CLUTCH MASTER CYLINDER	56	D5
CRANKCASE	26	C1
CRANKCASE COVER, L.	17	B8
CRANKCASE COVER, R.	11	B5
CRANKSHAFT	28	C2
CROSS SHAFT	38	C7
CYLINDER	4	B2
CYLINDER	6	B3
CYLINDER HEAD COVER	2	B1
CYLINDER HEAD, FR.	4	B2
CYLINDER HEAD, RR.	6	B3
FENDER, FR.	62	D8
FENDER, RR.	100	F3
FINAL DRIVEN GEAR	73	E1
FORK, FR.	63	D8
FR. BRAKE MASTER CYLINDER	54	D4
FRAME	110	F8
FUEL PUMP	84	E7
FUEL TANK	77	E3
GASKET KIT A	44	C10
GASKET KIT B	46	C11
GEARSHIFT DRUM	34	C5
HANDLEBAR	58	D6
HEADLIGHT	48	D1
HORN	60	D7
IGNITION COIL	106	F6
MUFFLER	88	E9
OIL FILTER	23	B11
OIL PUMP	23	B11
PISTON	28	C2
RADIATOR	108	F7
SEAT	80	E5
SHOCK ABSORBER	98	F2
SIDE COVER	82	E6
SPARK UNIT	100	F3
SPEEDOMETER	50	D2
STAND	94	E12
STARTING DRIVEN GEAR	16	B8
STARTING MOTOR	21	B10
STEERING STEM	60	D7
STEP	92	E11
SWINGARM	95	E12
SWITCH	52	D3
TACHOMETER	50	D2
TAILLIGHT	104	F5
TENSIONER	10	B5
THERMOSTAT	36	C6
TOOLS	112	F9
TOP BRIDGE	58	D6
TRANSMISSION	32	C4
TURN SIGNAL	102	F4
VALVE	8	B4
WATER PIPE	36	C6
WATER PUMP	19	B9
WHEEL, FR.	68	D11
WHEEL, RR.	72	E1
WIRE HARNESS	106	F6

GRID **D9**

FRONT BRAKE CALIPER

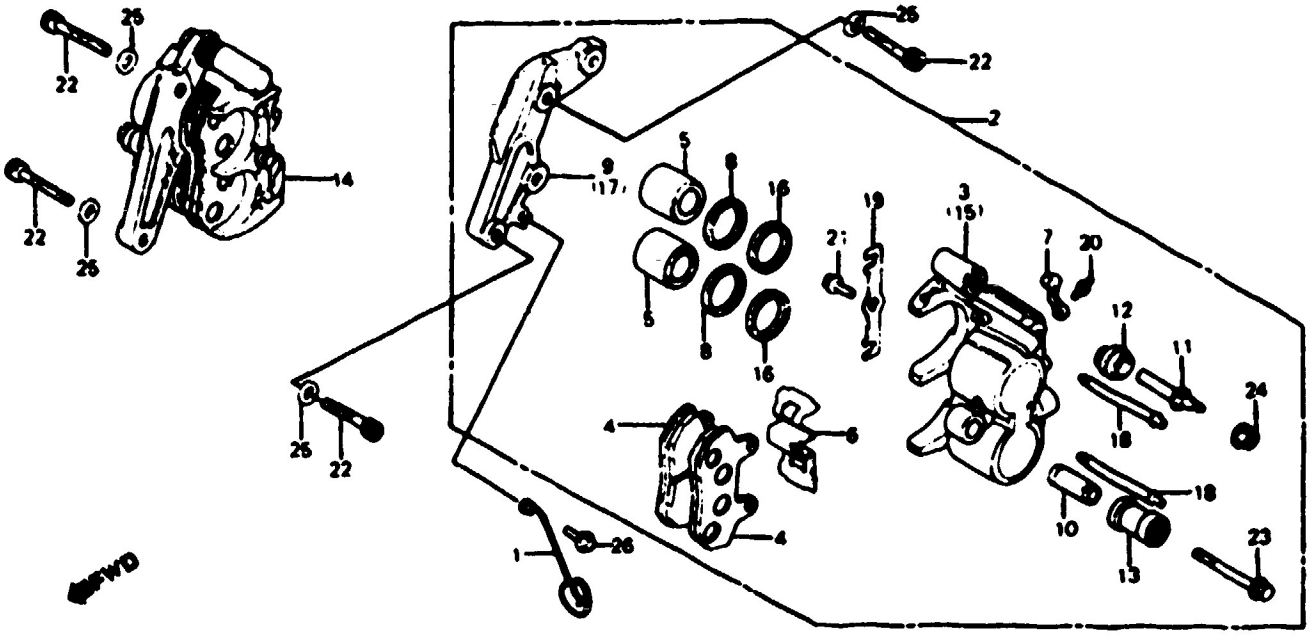

F14ME9010

VT750C'83

Ref. No.	DESCRIPTION (BLOCK NO. F-10)	FRAME SERIAL NUMBER FROM	FRAME SERIAL NUMBER TO	QTY REQ	PART NUMBER	HONDA CODE
1	CLAMP, SPEEDOMETER CABLE	-------	-------	1	44832-ME9-000	1405927
2	CALIPER ASSY., L. FR.	-------	-------	1	45100-ME9-003	1370097
	CALIPER ASSY., L. FR.	-------	-------	1	45100-ME9-004	1370105
3	CALIPER COMP., L. FR.	-------	-------	1	45101-MA5-771	1077049
4	PAD COMP. (JB) (SEE KIT P/N--END OF BLOCK)	-------	-------	4	45105-MC9-003	1282565
5	PISTON	-------	-------	4	45107-MA5-771	1077072
6	SPRING, PAD	-------	-------	2	45108-MA5-771	1077080
7	CAP, BLEEDER VALVE	-------	-------	2	45108-425-003	0718429
8	DUST SEAL	-------	-------	4	45109-MA5-771	1077098
	DUST SEAL	-------	-------	4	45109-166-006	1011964
9	BRACKET, L.	-------	-------	1	45110-MA5-771	1077106
10	SLEEVE	-------	-------	2	45111-MA5-771	1111442
11	PIN, BOLT	-------	-------	2	45131-MA5-771	1077130
12	BOOT, PIN	-------	-------	2	45133-MA5-771	1077155
13	BOOT, BOLT	-------	-------	4	45134-MA5-771	1077163

© AMERICAN HONDA MOTOR CO., LTD. 1993

VT750C'83 ENGINE NO.; RC14E-2000051 TO 2022747
VT750C'83 FRAME NO.; RC140-DM000035 TO DM022807

VT750C'83

Ref. No.	BLOCK NO. F-10 DESCRIPTION	FRAME SERIAL NUMBER FROM	TO	QTY REQ	PART NUMBER	HONDA CODE
14	CALIPER ASSY., R. FR.	-------	-------	1	45200-ME9-003	1370154
	CALIPER ASSY., R. FR.	-------	-------	1	45200-ME9-004	1370162
15	BODY, R. CALIPER	-------	-------	1	45201-MA5-771	1077197
16	SEAL, PISTON	-------	-------	4	45209-183-003	1077205
17	BRACKET, R.	-------	-------	1	45210-MA5-771	1077213
18	PIN, PAD RETAINER GROOVE, 5.5MM DIA.	-------	-------	4	45215-MA5-771	1077221
19	PLATE	-------	-------	2	45217-MA5-771	1077239
20	VALVE, BLEEDER	-------	-------	2	45224-413-003	0492637
21	BOLT, FLANGE, 6X10	-------	-------	2	90101-MA5-771	1078146
22	BOLT, SOCKET, 10X40	-------	-------	4	90164-460-840	1113257
23	BOLT, FLANGE, 8X48	-------	-------	2	90180-MA5-771	1113265
24	NUT, FLANGE, 10MM	-------	-------	2	90303-428-900	1078187
25	WASHER, PLAIN, 10MM	-------	-------	4	94102-10000	0172551
26	BOLT, FLANGE, 6X10	-------	-------	1	95700-06010-00	0350488
	BOLT, FLANGE, 6X10	-------	-------	1	95701-06010-00	2410876
NI	BRAKE PAD KIT	-------	-------	2	451A0-MC9-670	3529088

© AMERICAN HONDA MOTOR CO., LTD. 1983

CONTENTS

TITLE	PAGE	GRID
AIR CLEANER	86	E8
ALTERNATOR	17	B8
BATTERY	84	E7
BRAKE CALIPER, FR.	66	D10
BRAKE PANEL, RR.	70	D12
BRAKE PEDAL	90	E10
CABLE	52	D3
CAM CHAIN	10	B6
CAMSHAFT	8	B4
CARBURETOR ASSY.	41	C8
CARBURETOR COMPONENT	42	C9
CHANGE PEDAL	90	E10
CLUTCH	13	B6
CLUTCH MASTER CYLINDER	56	D6
CRANKCASE	26	C1
CRANKCASE COVER, L.	17	B8
CRANKCASE COVER, R.	11	B5
CRANKSHAFT	28	C2
CROSS SHAFT	38	C7
CYLINDER	4	B2
CYLINDER	6	B3
CYLINDER HEAD COVER	2	B1
CYLINDER HEAD, FR.	4	B2
CYLINDER HEAD, RR.	6	B3
FENDER, FR.	62	D8
FENDER, RR.	100	F3
FINAL DRIVEN GEAR	73	E1
FORK, FR.	63	D8
FR. BRAKE MASTER CYLINDER	54	D4
FRAME	110	F8
FUEL PUMP	84	E7
FUEL TANK	77	E3
GASKET KIT A	44	C10
GASKET KIT B	46	C11
GEARSHIFT DRUM	34	C5
HANDLEBAR	58	D6
HEADLIGHT	48	D1
HORN	60	D7
IGNITION COIL	106	F6
MUFFLER	88	E9
OIL FILTER	23	B11
OIL PUMP	23	B11
PISTON	28	C2
RADIATOR	108	F7
SEAT	80	E5
SHOCK ABSORBER	98	F2
SIDE COVER	82	E6
SPARK UNIT	100	F3
SPEEDOMETER	50	D2
STAND	94	E12
STARTING DRIVEN GEAR	16	B6
STARTING MOTOR	21	B10
STEERING STEM	60	D7
STEP	92	E11
SWINGARM	95	E12
SWITCH	52	D3
TACHOMETER	50	D2
TAILLIGHT	104	F5
TENSIONER	10	B5
THERMOSTAT	36	C6
TOOLS	112	F9
TOP BRIDGE	58	D6
TRANSMISSION	32	C4
TURN SIGNAL	102	F4
VALVE	8	B4
WATER PIPE	36	C6
WATER PUMP	19	B9
WHEEL, FR.	68	D11
WHEEL, RR.	72	E1
WIRE HARNESS	106	F6

GRID **D10**

FRONT WHEEL

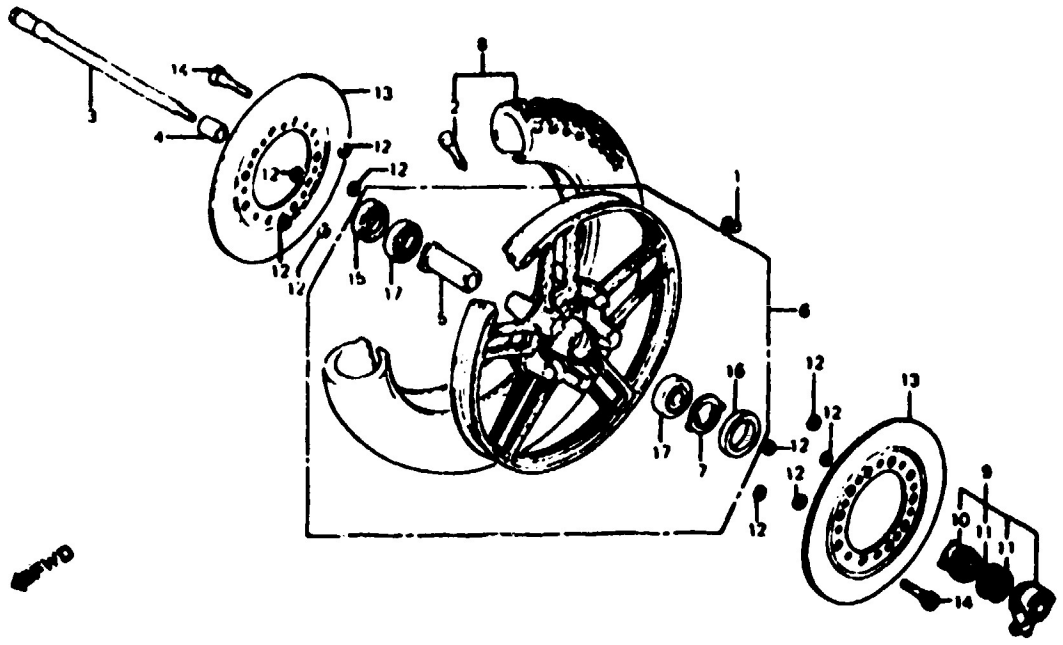

F14ME9011

Ref. No.	DESCRIPTION	FRAME SERIAL NUMBER FROM	FRAME SERIAL NUMBER TO	QTY REQ	PART NUMBER	HONDA CODE
	VT750C'83 BLOCK NO. F-11					
1	WEIGHT, BALANCE (10G)	-------	-------	AR	42704-MB0-000	1272319
	WEIGHT, BALANCE (20G)	-------	-------	AR	42705-MB0-000	1247881
	WEIGHT, BALANCE (30G)	-------	-------	AR	42706-MB0-000	1247899
2	VALVE, RIM (BRIDGESTONE)	-------	-------	1	42753-425-003	1032465
	VALVE, RIM	-------	-------	1	42753-425-004	1041128
3	AXLE, FR. WHEEL	-------	-------	1	44301-461-770	0946335
4	COLLAR, FR. WHEEL SIDE	-------	-------	1	44311-461-770	0946343
5	COLLAR COMP., FR. AXLE DISTANCE ..	-------	-------	1	44620-MB0-000	1248020
6	WHEEL SET, FR.	-------	-------	1	44650-ME9-000	1370055
7	RETAINER, GEAR BOX	-------	-------	1	44680-410-000	0482968
8	TIRE ASSY., FR. (110/90-19 62H BS)	-------	-------	1	44710-ME9-671	1374164
	TIRE ASSY., FR. (110/90-19 62H) (DUNLOP)	-------	-------	1	44710-461-772	0959601
	TIRE ASSY., FR. (US DUNLOP)	-------	-------	1	44710-461-773	1092931
9	BOX ASSY., SPEEDOMETER GEAR	-------	-------	1	44800-ME9-013	2463446
10	GEAR, SPEEDOMETER	-------	-------	1	44806-ME9-003	1374206

© AMERICAN HONDA MOTOR CO. LTD. 1983

VT750C'83 ENGINE NO.; RC14E-2000051 TO 2022747
VT750C'83 FRAME NO.; RC140-DM000035 TO DM022807

VT750C'83

Ref. No.	BLOCK NO. F-11 DESCRIPTION	FRAME SERIAL NUMBER FROM	TO	QTY REQ	PART NUMBER	HONDA CODE
11	WASHER, SPEEDOMETER GEAR	-------	-------	2	44809-402-000	0433896
12	SHIM, DAMPING	-------	-------	10	45128-ME2-003	1390830
13	DISK, FR. BRAKE	-------	-------	2	45251-ME2-000	1272517
14	BOLT, FR. DISK, 8X59	-------	-------	10	90105-ME2-000	1390848
	BOLT, FR. DISK, 8X57	-------	-------	10	90106-MF2-010	2045888
15	SEAL, DUST, 22X42X7	-------	-------	1	91252-MC7-003	1210913
16	DUST SEAL, 40X50X5	-------	-------	1	91258-410-003	0483800
	DUST SEAL, 40X50X5 (NOK)	-------	-------	1	91258-410-006	0912402
	DUST SEAL, 40X50X5 (ARAI)	-------	-------	1	91258-410-013	0670992
17	BEARING, RADIAL BALL, 6302U	-------	-------	2	96140-63020-10	0239889
	BEARING, RADIAL BALL, 6302UU	-------	-------	2	96150-63020-10	1213347

© AMERICAN HONDA MOTOR CO., LTD. 1993

CONTENTS

TITLE	PAGE	GRID
AIR CLEANER	86	E8
ALTERNATOR	17	B6
BATTERY	84	E7
BRAKE CALIPER, FR.	66	D10
BRAKE PANEL, RR.	70	D12
BRAKE PEDAL	90	E10
CABLE	52	D3
CAM CHAIN	10	B5
CAMSHAFT	8	B4
CARBURETOR ASSY	41	C8
CARBURETOR COMPONENT	42	C9
CHANGE PEDAL	90	E10
CLUTCH	13	B6
CLUTCH MASTER CYLINDER	56	D5
CRANKCASE	26	C1
CRANKCASE COVER, L.	17	B6
CRANKCASE COVER, R.	11	B5
CRANKSHAFT	28	C2
CROSS SHAFT	38	C7
CYLINDER	4	B2
CYLINDER	6	B3
CYLINDER HEAD COVER	2	B1
CYLINDER HEAD, FR.	4	B2
CYLINDER HEAD, RR.	6	B3
FENDER, FR.	62	D8
FENDER, RR.	100	F3
FINAL DRIVEN GEAR	73	E1
FORK, FR.	63	D6
FR. BRAKE MASTER CYLINDER	54	D4
FRAME	110	F8
FUEL PUMP	84	E7
FUEL TANK	77	E3
GASKET KIT A	44	C10
GASKET KIT B	46	C11
GEARSHIFT DRUM	34	C5
HANDLEBAR	58	D6
HEADLIGHT	48	D1
HORN	60	D7
IGNITION COIL	106	F6
MUFFLER	88	E9
OIL FILTER	23	B11
OIL PUMP	23	B11
PISTON	28	C2
RADIATOR	108	F7
SEAT	80	E5
SHOCK ABSORBER	98	F2
SIDE COVER	82	E6
SPARK UNIT	100	F3
SPEEDOMETER	50	D2
STAND	94	E12
STARTING DRIVEN GEAR	16	B6
STARTING MOTOR	21	B10
STEERING STEM	60	D7
STEP	92	E11
SWINGARM	95	E12
SWITCH	52	D3
TACHOMETER	50	D2
TAILLIGHT	104	F5
TENSIONER	10	B5
THERMOSTAT	36	C6
TOOLS	112	F9
TOP BRIDGE	58	D6
TRANSMISSION	32	C4
TURN SIGNAL	102	F4
VALVE	8	B4
WATER PIPE	36	C6
WATER PUMP	19	B9
WHEEL, FR.	68	D11
WHEEL, RR.	72	E1
WIRE HARNESS	106	F6

GRID **D11**

REAR BRAKE PANEL

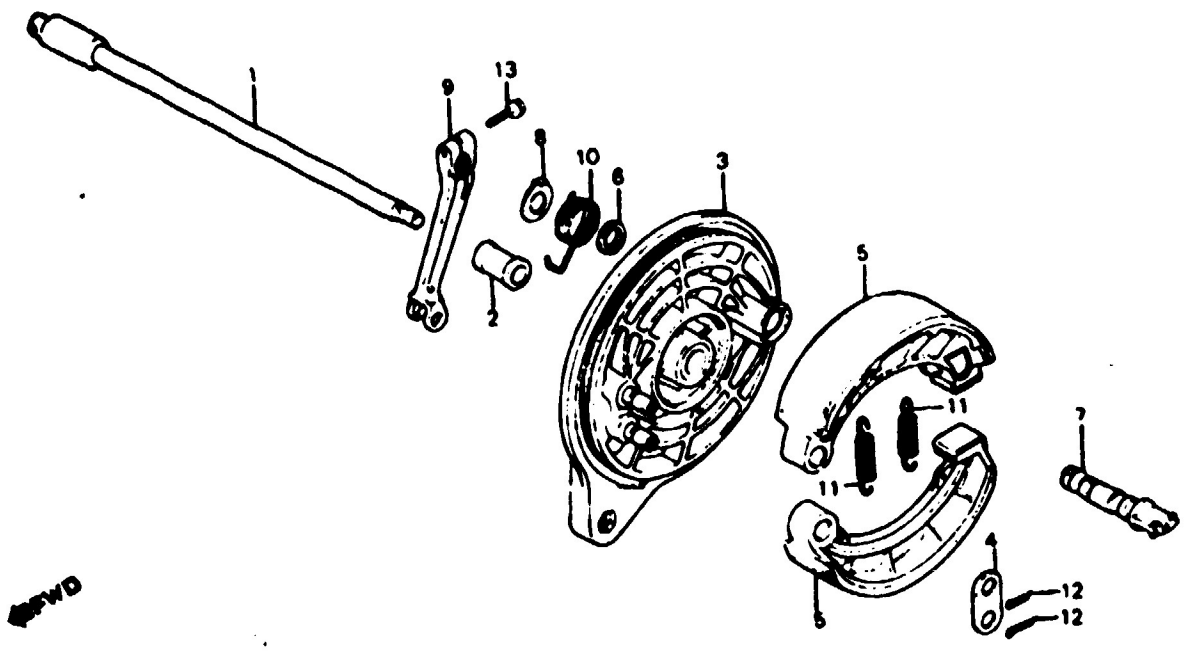

F14ME9012

VT750C'83

Ref. No.	DESCRIPTION (BLOCK NO. F-12)	FRAME SERIAL NUMBER FROM	FRAME SERIAL NUMBER TO	QTY REQ	PART NUMBER	HONDA CODE
1	AXLE, RR. WHEEL	-------	-------	1	42301-ME9-000	1369453
2	COLLAR, RR. WHEEL SIDE	-------	-------	1	42313-ME9-000	1369461
3	PANEL COMP., RR.	-------	-------	1	43100-ME5-000	1328798
4	WASHER, ANCHOR PIN	-------	-------	1	43102-319-000	0212092
	WASHER, RR. BRAKE ANCHOR PIN	-------	-------	1	43106-222-300	0033233
5	SHOE COMP., RR. BRAKE (SEE KIT P/N--END OF BLOCK)	-------	-------	2	43120-415-000	0669408
6	DUST SEAL, BRAKE CAM	-------	-------	1	43134-300-000	0191064
7	CAM RR. BRAKE	-------	-------	1	43141-MB0-000	1247956
8	INDICTOR, RR. BRAKE	-------	-------	1	43145-ME5-000	1365865
9	ARM, RR. BRAKE	-------	-------	1	43410-ME9-000	1370006
10	SPRING, BRAKE ARM RETURN	-------	-------	1	43411-ME9-003	1370014
11	SPRING, FR. BRAKE SHOE	-------	-------	2	45133-329-000	0293316
12	PIN, SPLIT, 2.5MM	-------	-------	2	94201-25200	0058404
	PIN, COTTER, 2.5MM	-------	-------	2	94201-25250	0145581
	PIN, COTTER, 2.5MM	-------	-------	2	94201-25300	0156091

© AMERICAN HONDA MOTOR CO., LTD. 1983

VT750C'83 ENGINE NO.; RC14E-2000051 TO 2022747
VT750C'83 FRAME NO.; RC140-DM000035 TO DM022807

VT750C'83

BLOCK NO. F-12

Ref. No.	DESCRIPTION	FRAME SERIAL NUMBER FROM	FRAME SERIAL NUMBER TO	QTY REQ	PART NUMBER	HONDA CODE
13	BOLT, FLANGE, 8X25	-------	-------	1	95700-08025-00	0671214
	BOLT, FLANGE, 8X25	-------	-------	1	95701-08025-00	2545325
NI	BRAKE SHOE SET	-------	-------	1	06430-415-000	3906906
	BRAKE SHOE KIT	-------	-------	1	431A2-415-000	3211950

© AMERICAN HONDA MOTOR CO., LTD. 1993

CONTENTS

TITLE	PAGE	GRID
AIR CLEANER	86	E8
ALTERNATOR	17	B8
BATTERY	84	E7
BRAKE CALIPER, FR.	66	D10
BRAKE PANEL, RR.	70	D12
BRAKE PEDAL	90	E10
CABLE	52	D3
CAM CHAIN	10	B5
CAMSHAFT	8	B4
CARBURETOR ASSY.	41	C8
CARBURETOR COMPONENT	42	C9
CHANGE PEDAL	90	E10
CLUTCH	13	B6
CLUTCH MASTER CYLINDER	56	D5
CRANKCASE	26	C1
CRANKCASE COVER, L.	17	B8
CRANKCASE COVER, R.	11	B5
CRANKSHAFT	28	C2
CROSS SHAFT	38	C7
CYLINDER	4	B2
CYLINDER	6	B3
CYLINDER HEAD COVER	2	B1
CYLINDER HEAD, FR.	4	B2
CYLINDER HEAD, RR.	6	B3
FENDER, FR.	62	D8
FENDER, RR.	100	F3
FINAL DRIVEN GEAR	73	E1
FORK, FR.	63	D8
FR. BRAKE MASTER CYLINDER	54	D4
FRAME	110	F8
FUEL PUMP	84	E7
FUEL TANK	77	E3
GASKET KIT A	44	C10
GASKET KIT B	46	C11
GEARSHIFT DRUM	34	C5
HANDLEBAR	58	D6
HEADLIGHT	48	D1
HORN	60	D7
IGNITION COIL	106	F6
MUFFLER	88	E9
OIL FILTER	23	B11
OIL PUMP	23	B11
PISTON	28	C2
RADIATOR	108	F7
SEAT	80	E5
SHOCK ABSORBER	98	F2
SIDE COVER	82	E6
SPARK UNIT	100	F3
SPEEDOMETER	50	D2
STAND	94	E12
STARTING DRIVEN GEAR	16	B8
STARTING MOTOR	21	B10
STEERING STEM	60	D7
STEP	92	E11
SWINGARM	95	E12
SWITCH	52	D3
TACHOMETER	50	D2
TAILLIGHT	104	F5
TENSIONER	10	B5
THERMOSTAT	36	C6
TOOLS	112	F9
TOP BRIDGE	58	D6
TRANSMISSION	32	C4
TURN SIGNAL	102	F4
VALVE	8	B4
WATER PIPE	36	C6
WATER PUMP	19	B9
WHEEL, FR.	68	D11
WHEEL, RR.	72	E1
WIRE HARNESS	106	F6

GRID **D12**

REAR WHEEL

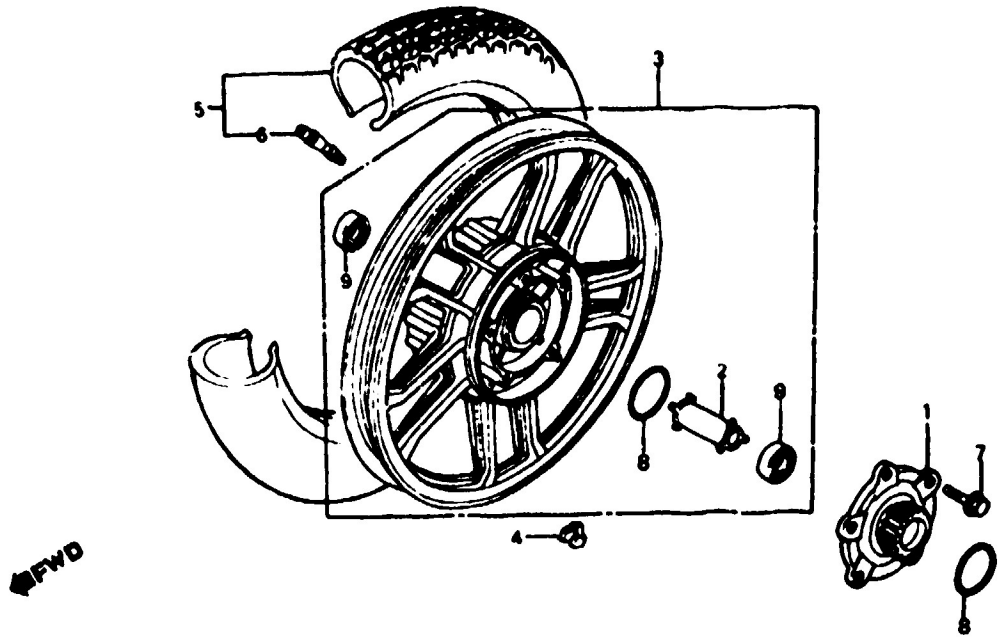

F14ME9013

VT750C'83

BLOCK NO. F-13

Ref. No.	DESCRIPTION	FRAME SERIAL NUMBER FROM	FRAME SERIAL NUMBER TO	QTY REQ	PART NUMBER	HONDA CODE
1	FLANGE, FINAL DRIVEN	-------	-------	1	42615-MB0-700	1293190
2	COLLAR, RR. AXLE DISTANCE	-------	-------	1	42620-MB0-000	1247840
3	WHEEL SET, RR.	-------	-------	1	42650-ME9-000	1424456
4	WEIGHT, BALANCE (10G)	-------	-------	AR	42704-MB0-000	1272319
	WEIGHT, BALANCE (20G)	-------	-------	AR	42705-MB0-000	1247881
	WEIGHT, BALANCE (30G)	-------	-------	AR	42706-MB0-000	1247899
5	TIRE ASSY., RR. (140/90-15 70H BS)	-------	-------	1	42710-ME9-671	1374172
	TIRE ASSY., RR. (140/90-15 70H DUNLOP)	-------	-------	1	42710-ME9-672	1374180
	TIRE ASSY., RR. (140/90-15 70H U.S. DUNLOP)	-------	-------	1	42710-MG8-673	2014033
6	VALVE, RIM (BRIDGESTONE)	-------	-------	1	42753-425-003	1032465
	VALVE, RIM	-------	-------	1	42753-425-004	1041128
7	BOLT, UBS, 10X34	-------	-------	5	90130-MC7-000	1210814
8	O-RING, 46X5X3.5	-------	-------	2	91358-MB0-000	1251610
9	BEARING, RADIAL BALL, 6303U	-------	-------	2	96140-63030-10	0300616

© AMERICAN HONDA MOTOR CO. LTD 1983

VT750C'83 ENGINE NO.; RC14E-2000051 TO 2022747
VT750C'83 FRAME NO.; RC140-DM000035 TO DM022807

FINAL DRIVEN GEAR

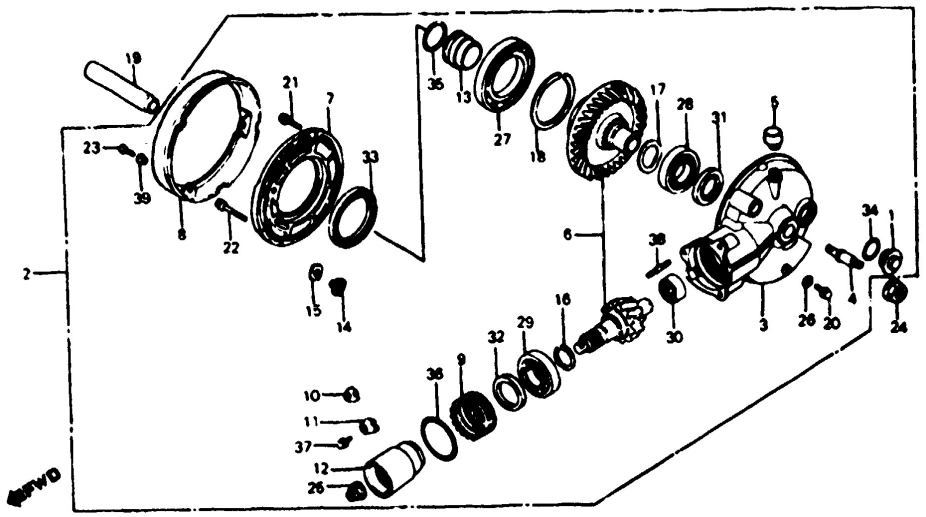

VT750C'83

Ref. No.	BLOCK NO. F-14 DESCRIPTION	FRAME SERIAL NUMBER FROM	TO	QTY REQ	PART NUMBER	HONDA CODE
1	CAP, TAPPET ADJUSTING HOLE	-------	-------	1	12361-035-000	0069625
	CAP, TAPPET ADJUSTING HOLE	-------	-------	1	12361-300-000	0188870
	CAP, TAPPET ADJUSTING HOLE	-------	-------	1	12361-371-980	0454934
2	GEAR ASSY., FINAL	-------	-------	1	41300-ME9-000	1369420
3	CASE, FINAL GEAR	-------	-------	1	41301-ME9-000	1369438
4	STAY, RUBBER LOWER	-------	-------	1	41303-463-300	0883116
5	CAP, BREATHER	-------	-------	1	41306-MB0-010	1316736
	BREATHER ASSY.	-------	-------	1	41306-ME5-305	1534924
6	GEAR SET, FINAL	-------	-------	1	41310-MB0-305	1247543
7	COVER, GEAR CASE	-------	-------	1	41312-MB4-770	2107431
	COVER, GEAR CASE	-------	-------	1	41321-MB0-010	1316744
8	PLATE, DUST GUARD	-------	-------	1	41324-MB0-010	1316751
9	RETAINER, BEARING	-------	-------	1	41331-ME9-000	1374214
	RETAINER, BEARING	-------	-------	1	41331-ME9-010	1871094
10	LOCK, BEARING ADJUSTING (A)	-------	-------	1	41332-415-000	0669176
11	LOCK, BEARING ADJUSTING (B)	-------	-------	1	41333-415-000	0669184

© AMERICAN HONDA MOTOR CO. LTD 1993

CONTENTS

TITLE	PAGE	GRID
AIR CLEANER	86	E8
ALTERNATOR	17	B8
BATTERY	84	E7
BRAKE CALIPER, FR.	66	D10
BRAKE PANEL, RR.	70	D12
BRAKE PEDAL	90	E10
CABLE	52	D3
CAM CHAIN	10	B5
CAMSHAFT	8	B4
CARBURETOR ASSY	41	C8
CARBURETOR COMPONENT	42	C9
CHANGE PEDAL	90	E10
CLUTCH	13	B6
CLUTCH MASTER CYLINDER	56	D5
CRANKCASE	26	C1
CRANKCASE COVER, L.	17	B8
CRANKCASE COVER, R.	11	B5
CRANKSHAFT	28	C2
CROSS SHAFT	38	C7
CYLINDER	4	B2
CYLINDER	6	B3
CYLINDER HEAD COVER	2	B1
CYLINDER HEAD, FR.	4	B2
CYLINDER HEAD, RR.	6	B3
FENDER, FR.	62	D8
FENDER, RR.	100	F3
FINAL DRIVEN GEAR	73	E1
FORK, FR.	63	D8
FR. BRAKE MASTER CYLINDER	54	D4
FRAME	110	F8
FUEL PUMP	84	E7
FUEL TANK	77	E3
GASKET KIT A	44	C10
GASKET KIT B	46	C11
GEARSHIFT DRUM	34	C5
HANDLEBAR	58	D6
HEADLIGHT	48	D1
HORN	60	D7
IGNITION COIL	106	F6
MUFFLER	88	E9
OIL FILTER	23	B11
OIL PUMP	23	B11
PISTON	28	C2
RADIATOR	108	F7
SEAT	80	E5
SHOCK ABSORBER	98	F2
SIDE COVER	82	E6
SPARK UNIT	100	F3
SPEEDOMETER	50	D2
STAND	94	E12
STARTING DRIVEN GEAR	16	B8
STARTING MOTOR	21	B10
STEERING STEM	60	D7
STEP	92	E11
SWINGARM	95	E12
SWITCH	52	D3
TACHOMETER	50	D2
TAILLIGHT	104	F5
TENSIONER	10	B5
THERMOSTAT	36	C6
TOOLS	112	F9
TOP BRIDGE	58	D6
TRANSMISSION	32	C4
TURN SIGNAL	102	F4
VALVE	8	B4
WATER PIPE	36	C6
WATER PUMP	19	B9
WHEEL, FR.	68	D11
WHEEL, RR.	72	E1
WIRE HARNESS	106	F6

GRID **E1**

FINAL DRIVEN GEAR

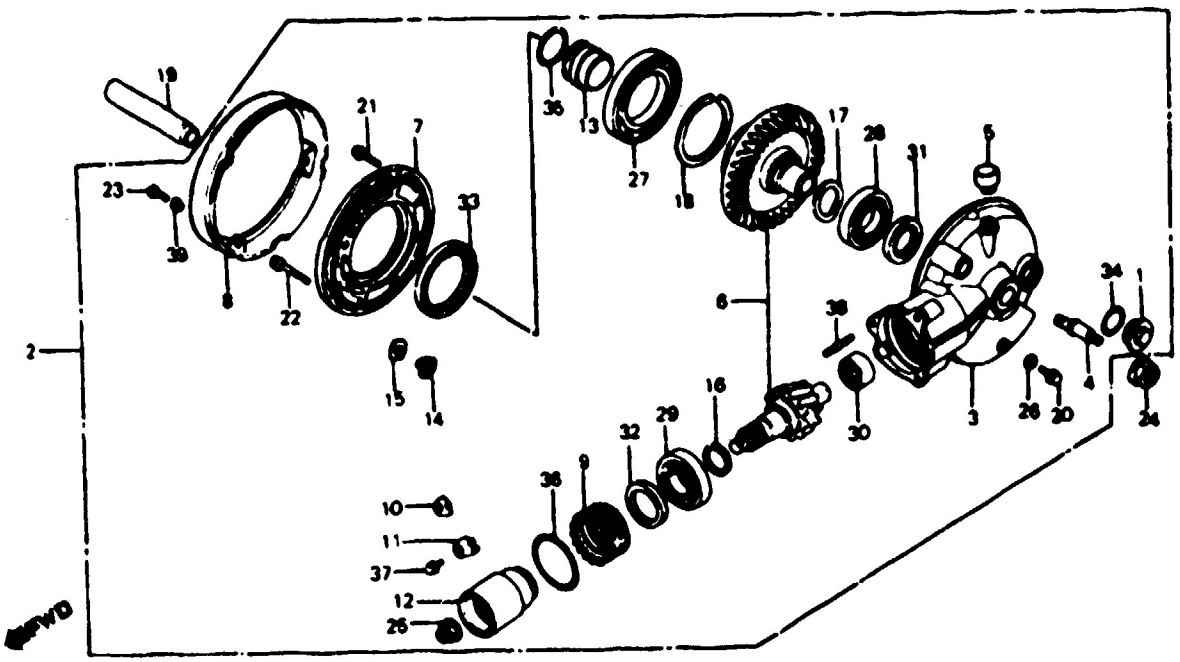

F14ME9014

Ref. No.	DESCRIPTION	FRAME SERIAL NUMBER FROM	FRAME SERIAL NUMBER TO	QTY REQ	PART NUMBER	HONDA CODE
	VT750C'83 BLOCK NO. F-14					
12	JOINT, PINION	-------	-------	1	41410-ME9-000	1374222
13	HOLDER, O-RING	-------	-------	1	41433-MB0-010	1316769
14	PIN, RING GEAR STOPPER	-------	-------	1	41436-MB0-310	1316777
15	SHIM A, STOPPER PIN (0.10)	-------	-------	AR	41437-MB0-310	1316785
	SHIM B, STOPPER PIN (0.15)	-------	-------	AR	41438-MB0-310	1316793
16	SHIM A, PINION GEAR (1.82)	-------	-------	1	41450-MB0-000	1247642
	SHIM B, PINION GEAR (1.88)	-------	-------	1	41451-MB0-000	1247659
	SHIM C, PINION GEAR (1.94)	-------	-------	1	41452-MB0-000	1247667
	SHIM D, PINION GEAR (2.00)	-------	-------	1	41453-MB0-000	1247675
	SHIM E, PINION GEAR (2.06)	-------	-------	1	41454-MB0-000	1247683
	SHIM F, PINION GEAR (2.12)	-------	-------	1	41455-MB0-000	1247691
	SHIM G, PINION GEAR (2.18)	-------	-------	1	41456-MB0-000	1247709
17	WASHER, SPECIAL, 35X40	-------	-------	1	41510-MB0-003	1247717
18	SPACER A, RING GEAR (1.82)	-------	-------	AR	41530-MB0-000	1247725
	SPACER B, RING GEAR (1.88)	-------	-------	AR	41531-MB0-000	1247733
	SPACER C, RING GEAR (1.94)	-------	-------	AR	41532-MB0-000	1247741

© AMERICAN HONDA MOTOR CO. LTD 1983

VT750C'83 ENGINE NO.; RC14E-2000051 TO 2022747
VT750C'83 FRAME NO.; RC140-DM000035 TO DM022807

VT750C'83

Ref. No.	BLOCK NO. F-14 DESCRIPTION	FRAME SERIAL NUMBER FROM	TO	QTY REQ	PART NUMBER	HONDA CODE
18	SPACER D, RING GEAR (2.00)	-------	-------	AR	41533-MB0-000	1247758
	SPACER E, RING GEAR (2.06)	-------	-------	AR	41534-MB0-000	1247766
	SPACER F, RING GEAR (2.12)	-------	-------	AR	41535-MB0-000	1247774
	SPACER G, RING GEAR (2.18)	-------	-------	AR	41536-MB0-000	1247782
	SPACER H, RING GEAR (2.24)	-------	-------	AR	41537-MB0-000	1247790
	SPACER I, RING GEAR (2.30)	-------	-------	AR	41538-MB0-000	1247808
19	COLLAR B, RR. DISTANCE	-------	-------	1	42625-MB0-000	1247857
20	BOLT, SEALING, 8MM	-------	-------	1	9010[illegible]-371-000	0417873
21	BOLT, FLANGE, 8X27	-------	-------	6	90133-MB0-000	1251016
22	BOLT, FLANGE, 10X38	-------	-------	2	90134-371-000	0471250
23	BOLT, HEX., 6X16	-------	-------	3	90170-MB0-000	1251206
24	NUT, RR. AXLE U, 16MM	-------	-------	1	90305-MC0-003	1117910
25	NUT, HEX., 16MM	-------	-------	1	90381-MB0-010	1378223
26	WASHER, 8MM	-------	-------	1	90471-580-000	0517144
27	BEARING, RADIAL BALL, 16012C3 ...	-------	-------	1	91051-MB0-005	1251438
28	BEARING, RADIAL BALL, 57/34C3 ...	-------	-------	1	91052-MB0-003	1251446
	BEARING, RADIAL BALL, 57/34C3 ...	-------	-------	1	91052-MB0-005	1251453
29	BEARING, RADIAL BALL, 6305	-------	-------	1	91061-MB0-005	1251461
30	BEARING, NEEDLE, 19/16	-------	-------	1	91062-MB0-003	1251479
	BEARING, NEEDLE, 19/16	-------	-------	1	91062-MB0-005	1251487
	BEARING, NEEDLE, 19/16	-------	-------	1	91062-MB0-013	1810696
31	OIL SEAL, 34X50X7 (ARAI)	-------	-------	1	91261-MB0-003	1266832
	OIL SEAL, 34X50X7 (NOK)	-------	-------	1	91261-MB0-005	1292150
32	OIL SEAL, 39X51X7 (ARAI)	-------	-------	1	91262-ME9-003	1371202
	OIL SEAL, 39X51X7 (NOK)	-------	-------	1	91262-ME9-005	1371210
33	OIL SEAL, 60X80X8 (ARAI)	-------	-------	1	91265-MB0-003	1292168
34	O-RING, 30.8MM	-------	-------	1	91302-001-020	0001065
35	O-RING, 35.2X2.4 (NOK)	-------	-------	1	91356-MB0-005	1285410
36	O-RING, 58.5X3.5	-------	-------	1	91353-MB0-003	1263839
	O-RING, 58.5X3.5	-------	-------	1	91359-MB0-000	1251636
37	BOLT, HEX., 6X12	-------	-------	1	92000-06012	0054197
	BOLT, HEX., 6X12	-------	-------	1	92101-06012	2738821

© AMERICAN HONDA MOTOR CO., LTD. 1983

CONTENTS

TITLE	PAGE	GRID
AIR CLEANER	86	E8
ALTERNATOR	17	B8
BATTERY	84	E7
BRAKE CALIPER, FR.	66	D10
BRAKE PANEL, RR.	70	D12
BRAKE PEDAL	90	E10
CABLE	52	D3
CAM CHAIN	10	B5
CAMSHAFT	8	B4
CARBURETOR ASSY	41	C8
CARBURETOR COMPONENT	42	C9
CHANGE PEDAL	90	E10
CLUTCH	13	B6
CLUTCH MASTER CYLINDER	56	D5
CRANKCASE	26	C1
CRANKCASE COVER, L.	17	B8
CRANKCASE COVER, R.	11	B5
CRANKSHAFT	28	C2
CROSS SHAFT	38	C7
CYLINDER	4	B2
CYLINDER	6	B3
CYLINDER HEAD COVER	2	B1
CYLINDER HEAD, FR.	4	B2
CYLINDER HEAD, RR.	6	B3
FENDER, FR.	62	D8
FENDER, RR.	100	F3
FINAL DRIVEN GEAR	73	E1
FORK, FR.	63	D8
FR. BRAKE MASTER CYLINDER	54	D4
FRAME	110	F8
FUEL PUMP	84	E7
FUEL TANK	77	E3
GASKET KIT A	44	C10
GASKET KIT B	46	C11
GEARSHIFT DRUM	34	C5
HANDLEBAR	58	D6
HEADLIGHT	48	D1
HORN	60	D7
IGNITION COIL	106	F6
MUFFLER	88	E9
OIL FILTER	23	B11
OIL PUMP	23	B11
PISTON	28	C2
RADIATOR	108	F7
SEAT	80	E5
SHOCK ABSORBER	98	F2
SIDE COVER	82	E6
SPARK UNIT	100	F3
SPEEDOMETER	50	D2
STAND	94	E12
STARTING DRIVEN GEAR	16	B8
STARTING MOTOR	21	B10
STEERING STEM	60	D7
STEP	92	E11
SWINGARM	95	E12
SWITCH	52	D3
TACHOMETER	50	D2
TAILLIGHT	104	F5
TENSIONER	10	B5
THERMOSTAT	36	C6
TOOLS	112	F9
TOP BRIDGE	58	D6
TRANSMISSION	32	C4
TURN SIGNAL	102	F4
VALVE	8	B4
WATER PIPE	36	C6
WATER PUMP	19	B9
WHEEL, FR.	68	D11
WHEEL, RR.	72	E1
WIRE HARNESS	106	F6

GRID **E2**

FINAL DRIVEN GEAR

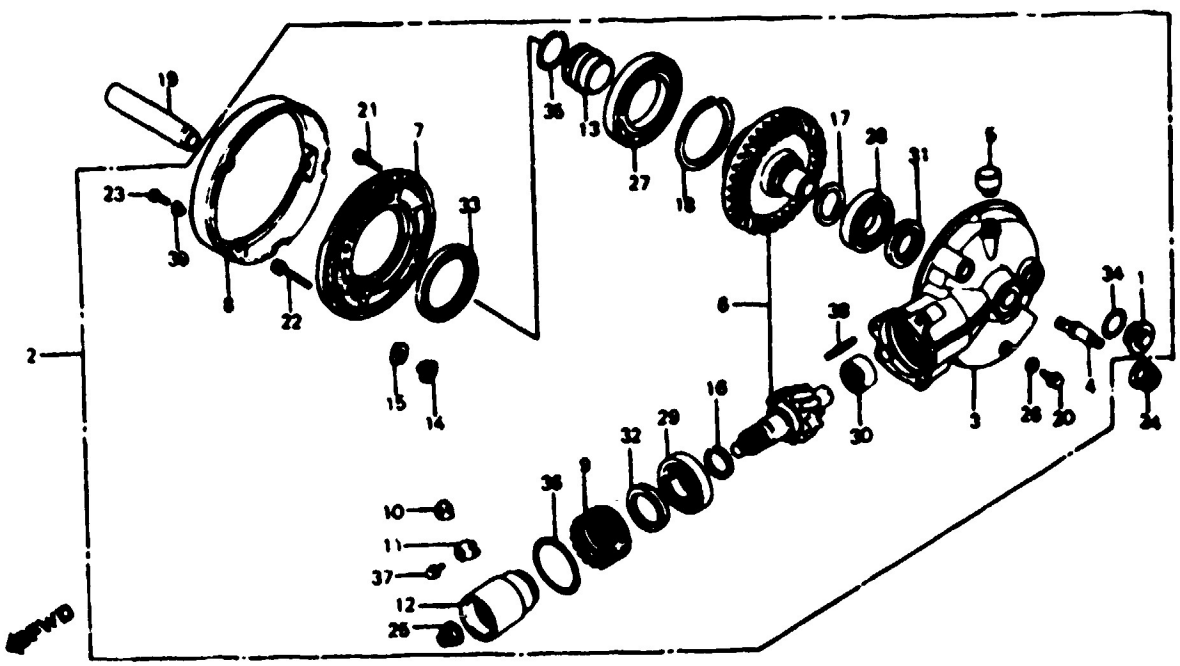

F14ME9014

Ref. No.	DESCRIPTION	FRAME SERIAL NUMBER FROM	FRAME SERIAL NUMBER TO	QTY REQ	PART NUMBER	HONDA CODE
	VT750C'83 BLOCK NO. F-14					
37	BOLT, HEX., 6X12	-------	-------	1	92101-06012-0A	3591500
38	BOLT, STUD, 10X50	-------	-------	3	92700-10050-0E	1251719
39	WASHER, PLAIN, 6MM	-------	-------	3	94101-06800	0345900

© AMERICAN HONDA MOTOR CO. LTD. 1983

VT750C'83 ENGINE NO.; RC14E-2000051 TO 2022747
VT750C'83 FRAME NO.; RC140-DM000035 TO DM022807

FUEL TANK

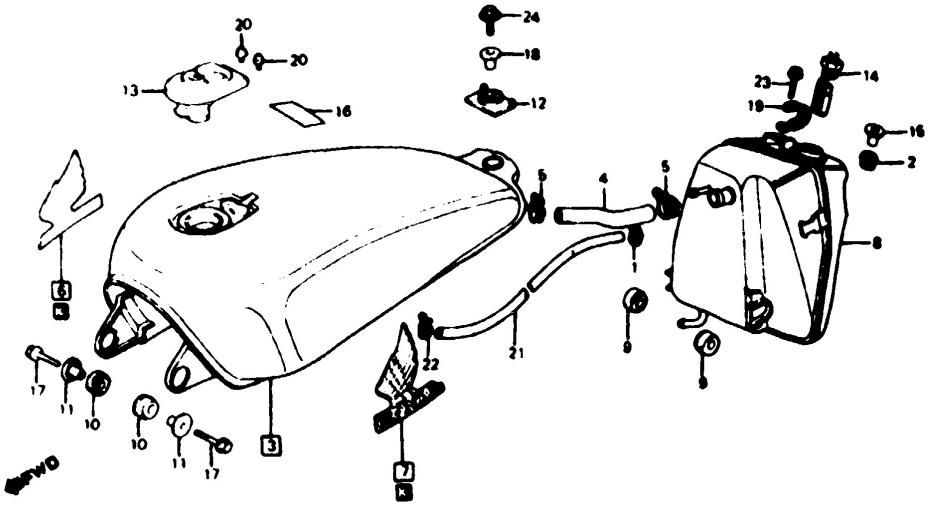

"CAUTION OR WARNING LABELS MUST BE ORDERED SEPARATELY WHEN APPLICABLE" F14ME9015

VT750C'83

BLOCK NO. F-15

Ref. No.	DESCRIPTION	FRAME SERIAL NUMBER FROM	FRAME SERIAL NUMBER TO	QTY REQ	PART NUMBER	HONDA CODE
1	CLIP, FUEL HOSE	-------	-------	1	16969-MB1-000	1244383
2	RUBBER, AIR CLEANER CASE MOUNTING	-------	-------	1	17245-107-010	0213462
3	TANK SET, FUEL *R114CU* (CANDY WINEBERRY RED-U)	-------	-------	1	175A1-ME9-000ZA	1367754
	TANK SET, FUEL *NH1Z* (BLACK-Z)	-------	-------	1	175A1-ME9-000ZB	1367762
	TANK SET, FUEL *R114CU* (CANDY WINEBERRY RED-U)	-------	-------	1	175A1-ME9-010ZA	1851310
	TANK SET, FUEL *NH1Z* (BLACK-Z)	-------	-------	1	175A1-ME9-010ZB	1851336
4	TUBE, FUEL	-------	-------	1	17511-ME9-000	1374230
5	BAND, FUEL TUBE (22MM)	-------	-------	2	17519-ME9-003	1367820
6	EMBLEM, R. FUEL TANK	-------	-------	1	17531-ME9-300	1367838
7	EMBLEM, L. FUEL TANK	-------	-------	1	17532-ME9-300	1367846
8	SUB TANK, FUEL	-------	-------	1	17550-ME9-000	1367853
9	CUSHION, SUB TANK	-------	-------	2	17555-ME9-000	1367861
10	RUBBER, TANK, FR.	-------	-------	2	17611-449-010	0820332

© AMERICAN HONDA MOTOR CO. LTD. 1983

CONTENTS

TITLE	PAGE	GRID
AIR CLEANER	86	E8
ALTERNATOR	17	B8
BATTERY	84	E7
BRAKE CALIPER, FR.	66	D10
BRAKE PANEL, RR.	70	D12
BRAKE PEDAL	90	E10
CABLE	52	D3
CAM CHAIN	10	B6
CAMSHAFT	8	B4
CARBURETOR ASSY	41	C8
CARBURETOR COMPONENT	42	C9
CHANGE PEDAL	90	E10
CLUTCH	13	B6
CLUTCH MASTER CYLINDER	56	D5
CRANKCASE	26	C1
CRANKCASE COVER, L.	17	B8
CRANKCASE COVER, R.	11	B5
CRANKSHAFT	28	C2
CROSS SHAFT	38	C7
CYLINDER	4	B2
CYLINDER	6	B3
CYLINDER HEAD COVER	2	B1
CYLINDER HEAD, FR.	4	B2
CYLINDER HEAD, RR.	6	B3
FENDER, FR.	62	D8
FENDER, RR.	100	F3
FINAL DRIVEN GEAR	73	E1
FORK, FR.	63	D8
FR. BRAKE MASTER CYLINDER	54	D4
FRAME	110	F8
FUEL PUMP	84	E7
FUEL TANK	77	E3
GASKET KIT A	44	C10
GASKET KIT B	46	C11
GEARSHIFT DRUM	34	C5
HANDLEBAR	58	D6
HEADLIGHT	48	D1
HORN	60	D7
IGNITION COIL	106	F6
MUFFLER	88	E9
OIL FILTER	23	B11
OIL PUMP	23	B11
PISTON	28	C2
RADIATOR	108	F7
SEAT	80	E5
SHOCK ABSORBER	98	F2
SIDE COVER	82	E6
SPARK UNIT	100	F3
SPEEDOMETER	50	D2
STAND	94	E12
STARTING DRIVEN GEAR	16	B8
STARTING MOTOR	21	B10
STEERING STEM	60	D7
STEP	92	E11
SWINGARM	95	E12
SWITCH	52	D3
TACHOMETER	50	D2
TAILLIGHT	104	F5
TENSIONER	10	B6
THERMOSTAT	36	C6
TOOLS	112	F9
TOP BRIDGE	58	D6
TRANSMISSION	32	C4
TURN SIGNAL	102	F4
VALVE	8	B4
WATER PIPE	36	C6
WATER PUMP	19	B9
WHEEL, FR.	68	D11
WHEEL, RR.	72	E1
WIRE HARNESS	106	F6

GRID E3

FUEL TANK

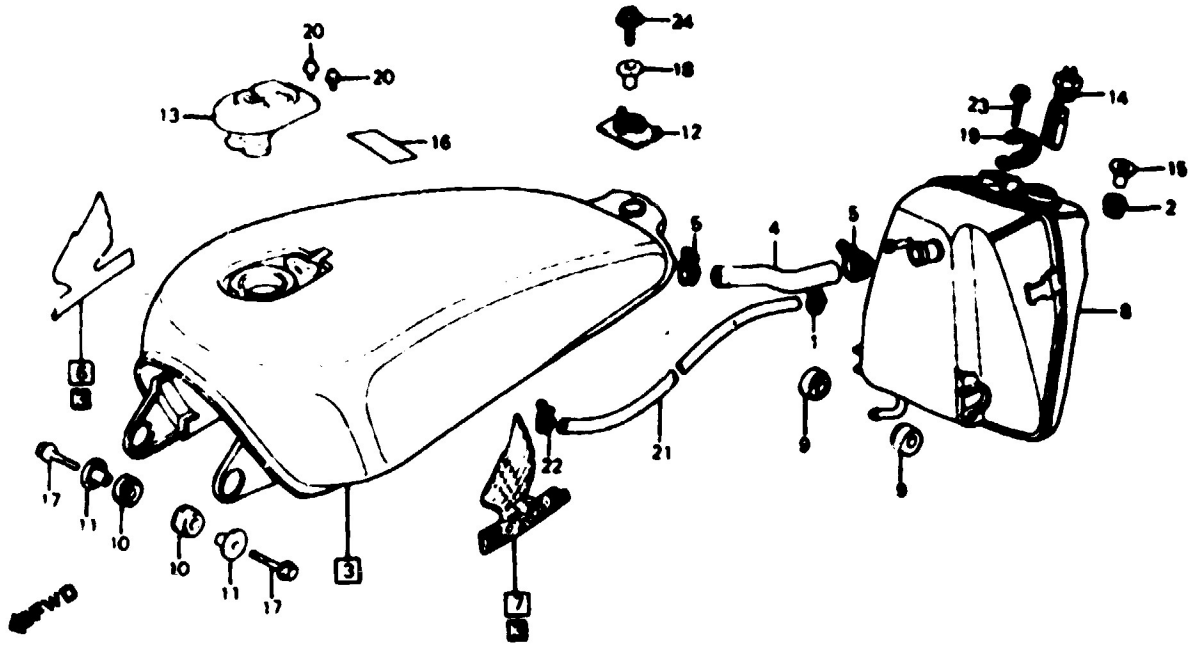

"CAUTION OR WARNING LABELS MUST BE ORDERED SEPARATELY WHEN APPLICABLE" F14ME0015

VT750C'83

BLOCK NO. F-15

Ref. No.	DESCRIPTION	FRAME SERIAL NUMBER FROM	FRAME SERIAL NUMBER TO	QTY REQ	PART NUMBER	HONDA CODE
11	COLLAR, TANK FR. MOUNTING	-------	-------	2	17612-449-000	0801126
12	CUSHION, FUEL TANK RR.	-------	-------	1	17613-ME9-000	1413335
13	CAP COMP., FUEL FILLER	-------	-------	1	17620-MB1-003	1245075
	CAP COMP., FUEL FILLER	-------	-------	1	17620-MB1-013	1537968
	CAP COMP., FUEL FILLER	-------	-------	1	17620-MB1-023	1556653
	CAP COMP., FUEL FILLER	-------	-------	1	17620-MB1-033	2403897
14	SENSOR, FUEL RESERVE	-------	-------	1	37810-MB4-008	1384775
15	COLLAR, FR. FENDER	-------	-------	1	61104-357-000	0321752
	COLLAR, FR. FENDER	-------	-------	1	61104-428-000	0687558
	COLLAR, RR. FENDER	-------	-------	1	61105-428-000	0686782
16	MARK, DRIVE CAUTION (TYPE G)	-------	-------	1	87560-ME9-670ZA	1406511
17	BOLT, FLANGE, 8X36	-------	-------	2	90111-362-000	0338293
18	COLLAR, FUEL TANK SETTING	-------	-------	1	90324-MB0-700	1310598
19	CLIP, 2X70	-------	-------	1	91413-679-000	0995712
20	SCREW, WASHER, 4X8	-------	-------	2	93893-04008-08	0870857

© AMERICAN HONDA MOTOR CO., LTD 1983

VT750C'83 ENGINE NO.; RC14E-2000051 TO 2022747
VT750C'83 FRAME NO.; RC140-DM000035 TO DM022807

VT750C'83

BLOCK NO. F-15

Ref No.	DESCRIPTION	FRAME SERIAL NUMBER FROM	FRAME SERIAL NUMBER TO	QTY REQ	PART NUMBER	HONDA CODE
21	TUBE, 5.3X190 (BULK HOSE: 95001-55008-20M)	-------	-------	1	95001-55190-20	1251842
22	CLIP A12, TUBE	-------	-------	1	95002-01120	0262063
23	BOLT, FLANGE, 6X20	-------	-------	1	95700-06020-08	0340331
	BOLT, FLANGE, 6X20	-------	-------	1	95701-06020-08	2374759
24	BOLT, FLANGE, 8X22	-------	-------	1	95700-08022-00	0637090
	BOLT, FLANGE, 8X22	-------	-------	1	95701-08022-00	2652626

© AMERICAN HONDA MOTOR CO., LTD. 1983

CONTENTS

TITLE	PAGE	GRID
AIR CLEANER	86	E8
ALTERNATOR	17	B8
BATTERY	84	E7
BRAKE CALIPER, FR.	66	D10
BRAKE PANEL, RR.	70	D12
BRAKE PEDAL	90	E10
CABLE	52	D3
CAM CHAIN	10	B6
CAMSHAFT	8	B4
CARBURETOR ASSY	41	C8
CARBURETOR COMPONENT	42	C9
CHANGE PEDAL	90	E10
CLUTCH	13	B6
CLUTCH MASTER CYLINDER	56	D5
CRANKCASE	26	C1
CRANKCASE COVER, L.	17	B8
CRANKCASE COVER, R.	11	B5
CRANKSHAFT	28	C2
CROSS SHAFT	38	C7
CYLINDER	4	B2
CYLINDER	6	B3
CYLINDER HEAD COVER	2	B1
CYLINDER HEAD, FR.	4	B2
CYLINDER HEAD, RR.	6	B3
FENDER, FR.	62	D8
FENDER, RR.	100	F3
FINAL DRIVEN GEAR	73	E1
FORK, FR.	63	D8
FR. BRAKE MASTER CYLINDER	54	D4
FRAME	110	F8
FUEL PUMP	84	E7
FUEL TANK	77	E3
GASKET KIT A	44	C10
GASKET KIT B	46	C11
GEARSHIFT DRUM	34	C5
HANDLEBAR	58	D6
HEADLIGHT	48	D1
HORN	60	D7
IGNITION COIL	106	F6
MUFFLER	88	E9
OIL FILTER	23	B11
OIL PUMP	23	B11
PISTON	28	C2
RADIATOR	108	F7
SEAT	80	E5
SHOCK ABSORBER	98	F2
SIDE COVER	82	E6
SPARK UNIT	100	F3
SPEEDOMETER	50	D2
STAND	94	E12
STARTING DRIVEN GEAR	16	B8
STARTING MOTOR	21	B10
STEERING STEM	60	D7
STEP	92	E11
SWINGARM	96	E12
SWITCH	52	D3
TACHOMETER	50	D2
TAILLIGHT	104	F5
TENSIONER	10	B6
THERMOSTAT	36	C6
TOOLS	112	F9
TOP BRIDGE	58	D6
TRANSMISSION	32	C4
TURN SIGNAL	102	F4
VALVE	8	B4
WATER PIPE	36	C6
WATER PUMP	19	B9
WHEEL, FR.	68	D11
WHEEL, RR.	72	E1
WIRE HARNESS	106	F6

GRID **E4**

SEAT

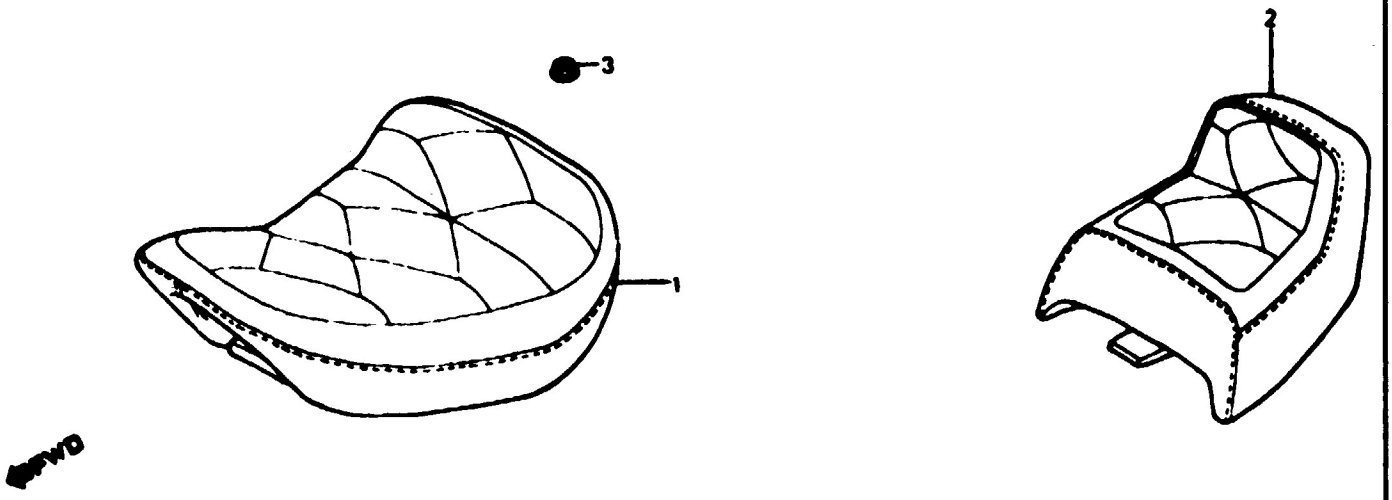

F14ME0016

Ref. No.	DESCRIPTION	FRAME SERIAL NUMBER FROM	FRAME SERIAL NUMBER TO	QTY REQ	PART NUMBER	HONDA CODE
	VT750C'83 BLOCK NO. F-16					
1	SEAT ASSY., FR.	-------	-------	1	77100-ME9-670	1370626
2	SEAT ASSY., RR.	-------	-------	1	77300-ME9-670	1370634
3	NUT, FLANGE, 6MM	-------	-------	2	94050-06080	0612689

© AMERICAN HONDA MOTOR CO., LTD. 1983

VT750C'83 ENGINE NO.; RC14E-2000051 TO 2022747
VT750C'83 FRAME NO.; RC140-DM000035 TO DM022807

VT750C'83

Ref. No.	BLOCK NO. F-16 DESCRIPTION	FRAME SERIAL NUMBER FROM	TO	QTY REQ	PART NUMBER	HONDA CODE

© AMERICAN HONDA MOTOR CO., LTD. 1983

CONTENTS

TITLE	PAGE	GRID
AIR CLEANER	86	E8
ALTERNATOR	17	B8
BATTERY	84	E7
BRAKE CALIPER, FR.	66	D10
BRAKE PANEL, RR.	70	D12
BRAKE PEDAL	90	E10
CABLE	52	D3
CAM CHAIN	10	B5
CAMSHAFT	8	B4
CARBURETOR ASSY	41	C8
CARBURETOR COMPONENT	42	C9
CHANGE PEDAL	90	E10
CLUTCH	13	B6
CLUTCH MASTER CYLINDER	56	D5
CRANKCASE	26	C1
CRANKCASE COVER, L.	17	B8
CRANKCASE COVER, R.	11	B5
CRANKSHAFT	28	C2
CROSS SHAFT	38	C7
CYLINDER	4	B2
CYLINDER	6	B3
CYLINDER HEAD COVER	2	B1
CYLINDER HEAD, FR.	4	B2
CYLINDER HEAD, RR.	6	B3
FENDER, FR.	62	D8
FENDER, RR.	100	F3
FINAL DRIVEN GEAR	73	E1
FORK, FR.	63	D8
FR. BRAKE MASTER CYLINDER	54	D4
FRAME	110	F8
FUEL PUMP	84	E7
FUEL TANK	77	E3
GASKET KIT A	44	C10
GASKET KIT B	46	C11
GEARSHIFT DRUM	34	C5
HANDLEBAR	58	D6
HEADLIGHT	48	D1
HORN	60	D7
IGNITION COIL	106	F6
MUFFLER	88	E9
OIL FILTER	23	B11
OIL PUMP	23	B11
PISTON	28	C2
RADIATOR	108	F7
SEAT	80	E5
SHOCK ABSORBER	98	F2
SIDE COVER	82	E6
SPARK UNIT	100	F3
SPEEDOMETER	50	D2
STAND	94	E12
STARTING DRIVEN GEAR	16	B8
STARTING MOTOR	21	B10
STEERING STEM	60	D7
STEP	92	E11
SWINGARM	95	E12
SWITCH	52	D3
TACHOMETER	50	D2
TAILLIGHT	104	F5
TENSIONER	10	B5
THERMOSTAT	36	C6
TOOLS	112	F9
TOP BRIDGE	58	D6
TRANSMISSION	32	C4
TURN SIGNAL	102	F4
VALVE	8	B4
WATER PIPE	36	C6
WATER PUMP	19	B9
WHEEL, FR.	68	D11
WHEEL, RR.	72	E1
WIRE HARNESS	106	F6

GRID **E5**

SIDE COVER

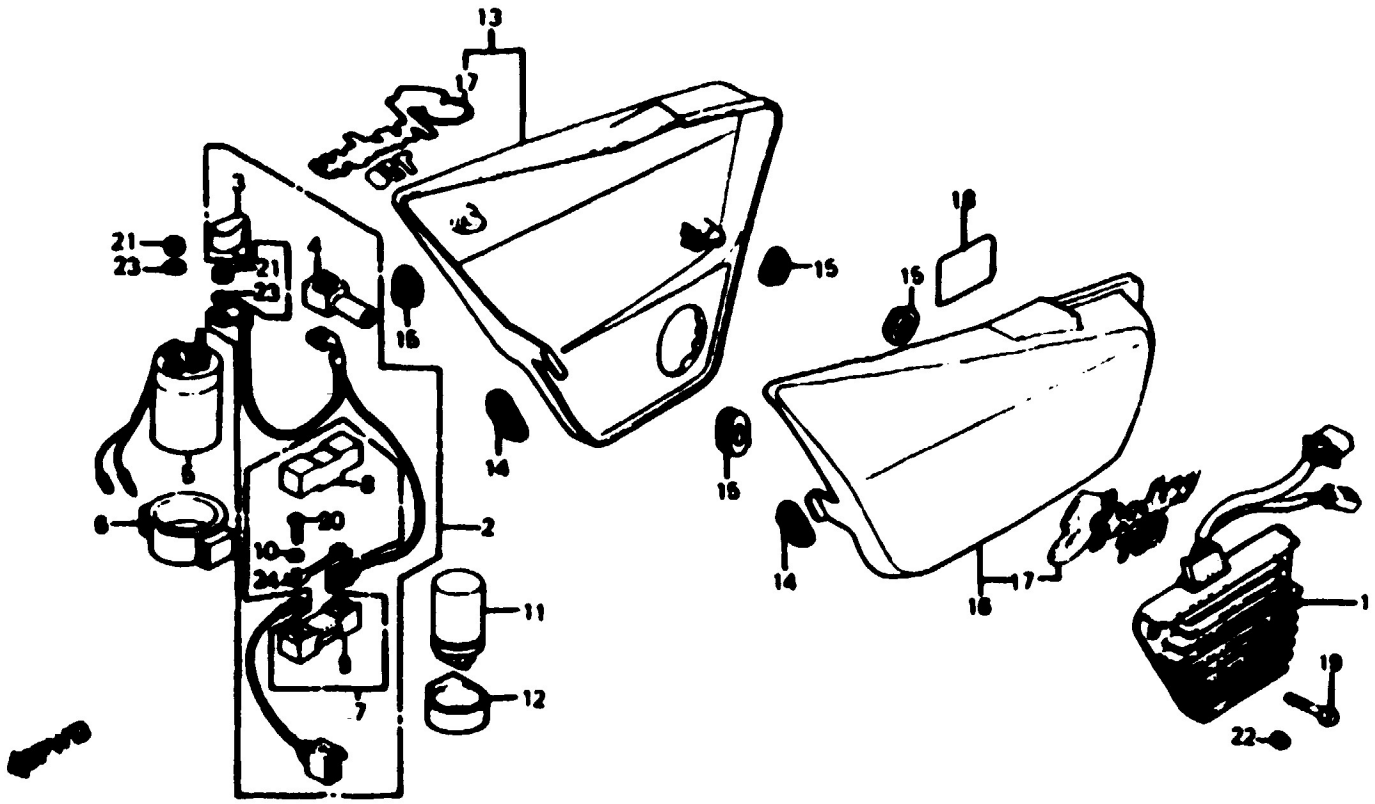



Color chart for side cover emblem

TYPE	Main color	Position		
		A	B	C
TYPE 1	Candy Wine Berry red	Black metallic	Gold	Red
TYPE 2	Black	Grey metallic	Gold	Red

"CAUTION OR WARNING LABELS MUST BE ORDERED SEPARATELY WHEN APPLICABLE" F14ME017T

 © AMERICAN HONDA MOTOR CO., LTD. 1983

VT750C '83 ENGINE NO.; RC14E-2000051 TO 2022747
VT750C '83 FRAME NO.; RC140-DM000035 TO DM022807

VT750C'83

Ref. No.	BLOCK NO. F-17 DESCRIPTION	FRAME SERIAL NUMBER FROM	TO	QTY REQ	PART NUMBER	HONDA CODE
1	RECTIFIER ASSY., REGULATOR	-------	-------	1	31600-ME9-008	1392158
2	CABLE, STARTER BATTERY	-------	-------	1	32401-ME9-000	1368992
3	COVER, BATTERY	-------	-------	1	32414-ME9-000	1369016
4	COVER B, MAGNETIC SWITCH	-------	-------	1	32416-460-000	0832105
5	SWITCH ASSY., STARTER MAGNETIC	-------	-------	1	35850-ME9-000	1416213
6	RUBBER, SHOCK	-------	-------	1	35856-ME9-000	1369297
7	BOX, MAIN FUSE	-------	-------	1	38250-ME9-005	1413616
8	COVER	-------	-------	1	38251-KJ9-000	1822154
	COVER	-------	-------	1	38251-MA6-005	1374255
9	BASE	-------	-------	1	38252-ME9-005	1436203
10	WASHER, PLAIN, 3X10	-------	-------	2	38253-422-005	1374271
11	RELAY COMP., TURN SIGNAL (MITSUBA)	-------	-------	1	38301-MB0-004	1247337
12	SUSPENSION, TURN SIGNAL RELAY	-------	-------	1	38306-292-000	0480293
13	COVER SET, R. SIDE *R114CU* (CANDY WINEBERRY RED-U)	-------	-------	1	835A0-ME9-670ZA	1436252
	COVER SET, R. SIDE *NH1Z* (BLACK-Z)	-------	-------	1	835A0-ME9-670ZB	1436260
14	GROMMET, SIDE COVER	-------	-------	2	83551-ME9-000	1370733
15	GROMMET, AIR CLEANER CASE	-------	-------	4	83551-300-000	0204990
16	COVER SET, L. SIDE *R114CU* (CANDY WINEBERRY RED-U)	-------	-------	1	836A0-ME9-670ZA	1436278
	COVER SET, L. SIDE *NH1Z* (BLACK-Z)	-------	-------	1	836A0-ME9-670ZB	1436286
17	EMBLEM, SIDE COVER *TYPE1*	-------	-------	2	83605-ME9-670ZA	1414614
	EMBLEM, SIDE COVER *TYPE2*	-------	-------	2	83605-ME9-670ZB	1414622
18	MARK, BATTERY CAUTION	-------	-------	1	87506-ME9-670	1370816
19	BOLT, CAP, 6X35	-------	-------	1	92500-06035-0G	1272160
20	SCREW, PAN, 3X8	-------	-------	2	93500-03008-0H	0374694
21	NUT, HEX., 6MM	-------	-------	2	94002-06080-0S	0712505
22	NUT, CAP, 6MM	-------	-------	1	94021-06070-0S	0712513
23	WASHER, SPRING, 6MM	-------	-------	2	94111-06800	0258210
24	FUSE F (30A)	-------	-------	2	98200-53000	0412676

© AMERICAN HONDA MOTOR CO., LTD. 1983

CONTENTS

TITLE	PAGE	GRID
AIR CLEANER	86	E8
ALTERNATOR	17	B8
BATTERY	84	E7
BRAKE CALIPER, FR.	66	D10
BRAKE PANEL, RR.	70	D12
BRAKE PEDAL	90	E10
CABLE	52	D3
CAM CHAIN	10	B5
CAMSHAFT	8	B4
CARBURETOR ASSY.	41	C8
CARBURETOR COMPONENT	42	C9
CHANGE PEDAL	90	E10
CLUTCH	13	B6
CLUTCH MASTER CYLINDER	56	D5
CRANKCASE	26	C1
CRANKCASE COVER, L.	17	B8
CRANKCASE COVER, R.	11	B5
CRANKSHAFT	28	C2
CROSS SHAFT	38	C7
CYLINDER	4	B2
CYLINDER	6	B3
CYLINDER HEAD COVER	2	B1
CYLINDER HEAD, FR.	4	B2
CYLINDER HEAD, RR.	6	B3
FENDER, FR.	62	D8
FENDER, RR.	100	F3
FINAL DRIVEN GEAR	73	E1
FORK, FR.	63	D8
FR. BRAKE MASTER CYLINDER	54	D4
FRAME	110	F8
FUEL PUMP	84	E7
FUEL TANK	77	E3
GASKET KIT A	44	C10
GASKET KIT B	46	C11
GEARSHIFT DRUM	34	C5
HANDLEBAR	58	D6
HEADLIGHT	48	D1
HORN	60	D7
IGNITION COIL	106	F6
MUFFLER	88	E9
OIL FILTER	23	B11
OIL PUMP	23	B11
PISTON	28	C2
RADIATOR	108	F7
SEAT	80	E5
SHOCK ABSORBER	98	F2
SIDE COVER	82	E6
SPARK UNIT	100	F3
SPEEDOMETER	50	D2
STAND	94	E12
STARTING DRIVEN GEAR	16	B8
STARTING MOTOR	21	B10
STEERING STEM	60	D7
STEP	92	E11
SWINGARM	95	E12
SWITCH	52	D3
TACHOMETER	50	D2
TAILLIGHT	104	F5
TENSIONER	10	B5
THERMOSTAT	36	C6
TOOLS	112	F9
TOP BRIDGE	58	D6
TRANSMISSION	32	C4
TURN SIGNAL	102	F4
VALVE	8	B4
WATER PIPE	36	C6
WATER PUMP	19	B9
WHEEL, FR.	68	D11
WHEEL, RR.	72	E1
WIRE HARNESS	106	F6

GRID **E6**

BATTERY • FUEL PUMP

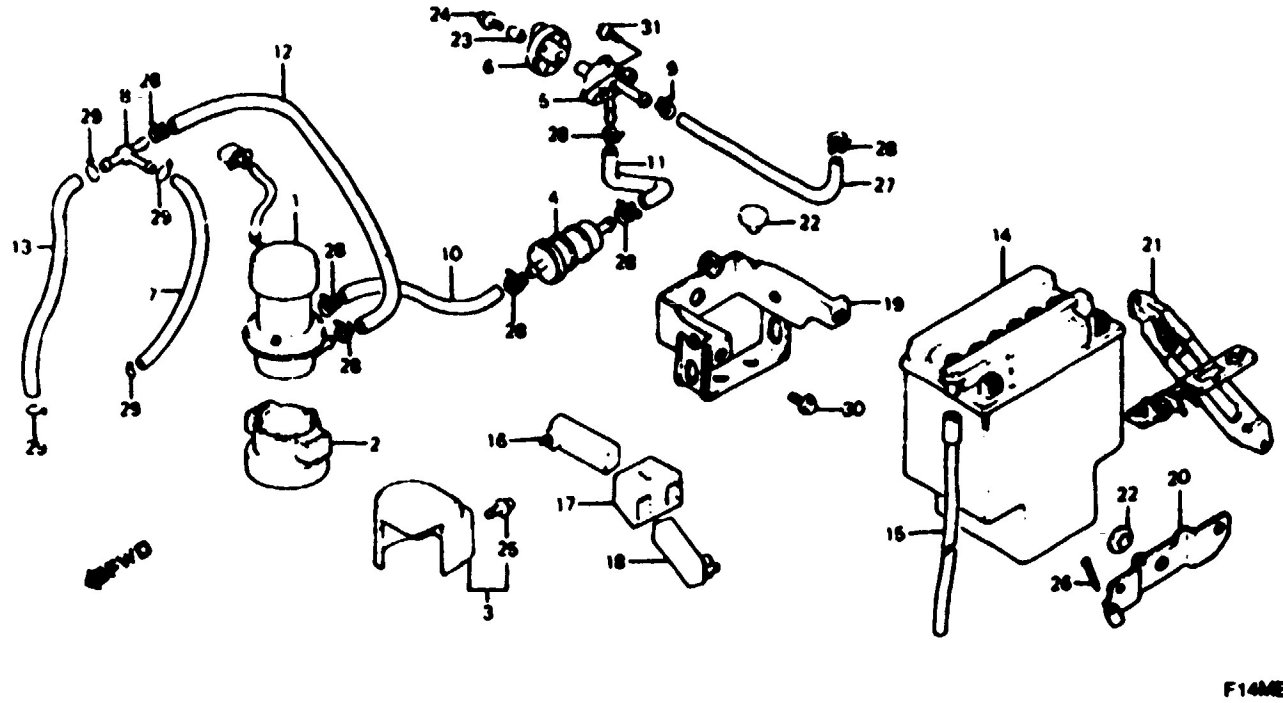

F14ME8018

VT750C'83

Ref. No.	DESCRIPTION (BLOCK NO. F-18)	FRAME SERIAL NUMBER FROM	FRAME SERIAL NUMBER TO	QTY REQ	PART NUMBER	HONDA CODE
1	PUMP ASSY., FUEL	-------	-------	1	16700-ME9-005	1367523
	PUMP ASSY., FUEL	-------	-------	1	16700-ME9-015	1870757
2	RUBBER, FUEL PUMP MOUNTING	-------	-------	1	16701-ME9-003	1367531
3	COVER, FUEL PUMP	-------	-------	1	16702-ME9-000	1413293
4	STRAINER COMP., FUEL	-------	-------	1	16900-371-004	0404327
5	VALVE ASSY., FUEL	-------	-------	1	16950-ME9-003	1367549
6	CAP, FUEL COCK	-------	-------	1	16956-ME9-000	1367556
	CAP, FUEL COCK	-------	-------	1	16956-ME9-770	1535707
7	TUBE, CARBURETOR FUEL	-------	-------	1	16957-ME9-000	1413301
8	PIPE, THREE WAY JOINT	-------	-------	1	16960-ME9-000	1367564
9	CLIP, FUEL HOSE	-------	-------	1	16969-MB1-000	1244383
10	TUBE B, FUEL	-------	-------	1	17513-ME9-000	1367796
11	TUBE A, FUEL	-------	-------	1	17514-ME9-000	1367804
12	TUBE C, FUEL	-------	-------	1	17515-ME9-000	1413327
13	TUBE, FUEL, 5.3X280	-------	-------	1	17516-ME9-000	1436096
14	BATTERY (HYB 16)	-------	-------	1	31500-ME9-611	2575306

© AMERICAN HONDA MOTOR CO., LTD. 1983

VT750C'83 ENGINE NO.; RC14E-2000051 TO 2022747
VT750C'83 FRAME NO.; RC140-DM000035 TO DM022807

VT750C'83

BLOCK NO. F-18

Ref. No.	DESCRIPTION	FRAME SERIAL NUMBER FROM	FRAME SERIAL NUMBER TO	QTY REQ	PART NUMBER	HONDA CODE
14	BATTERY (HYB 16)	-------	-------	1	31500-ME9-671	1335348
	BATTERY (HYB16A-A)	-------	-------	1	31500-ME9-672	2432946
	BATTERY (HYB16A-A)	-------	-------	1	31500-ME9-673	3000239
	BATTERY (HYB 16)	-------	-------	1	31500-ME9-674	4108064
15	TUBE, BATTERY	-------	-------	1	31502-ME9-000	1413467
16	RELAY, FUEL CUT	-------	-------	1	36100-MB1-701	1291426
17	SUSPENSION, FUEL CUT RELAY	-------	-------	1	36101-ME9-008	1406644
18	CHECK UNIT, PILOT LAMP	-------	-------	1	37640-MB1-701	1291434
19	BOX, BATTERY	-------	-------	1	50325-ME9-000	1370246
20	PLATE, BATTERY SUPPORT	-------	-------	1	50327-ME9-000	1370253
21	PLATE, ELECTRIC	-------	-------	1	50340-ME9-000	1413640
22	RUBBER, BATTERY BOX	-------	-------	7	83618-323-000	0255810
23	COLLAR, FUEL COCK CAP	-------	-------	1	90123-ME9-000	1378678
24	SCREW-WASHER, 4X12	-------	-------	1	93891-04012-07	1218643
25	SCREW-WASHER, 6X12	-------	-------	1	93893-06012-07	1317007
26	PIN, SPLIT, 3.0X50	-------	-------	1	94201-30500	0350421
27	TUBE, 5.5X130 (BULK HOSE: 95001-55008-20M)	-------	-------	1	95001-55130-20	0677344
28	CLIP A12, TUBE	-------	-------	7	95002-01120	0262063
29	CLIP, TUBE, B10	-------	-------	4	95002-02100	0250985
30	BOLT, FLANGE, 6X10	-------	-------	2	95700-06010-08	0344952
	BOLT, FLANGE, 6X10	-------	-------	2	95701-06010-08	2204709
31	BOLT, FLANGE, 6X12	-------	-------	2	95700-06012-08	0252254
	BOLT, FLANGE, 6X12	-------	-------	2	95701-06012-08	2170793

© AMERICAN HONDA MOTOR CO., LTD. 1983

CONTENTS

TITLE	PAGE	GRID
AIR CLEANER	86	E8
ALTERNATOR	17	B8
BATTERY	84	E7
BRAKE CALIPER, FR.	66	D10
BRAKE PANEL, RR.	70	D12
BRAKE PEDAL	90	E10
CABLE	52	D3
CAM CHAIN	10	B5
CAMSHAFT	8	B4
CARBURETOR ASSY.	41	C8
CARBURETOR COMPONENT	42	C9
CHANGE PEDAL	90	E10
CLUTCH	13	B6
CLUTCH MASTER CYLINDER	56	D5
CRANKCASE	26	C1
CRANKCASE COVER, L.	17	B8
CRANKCASE COVER, R.	11	B5
CRANKSHAFT	28	C2
CROSS SHAFT	38	C7
CYLINDER	4	B2
CYLINDER	6	B3
CYLINDER HEAD COVER	2	B1
CYLINDER HEAD, FR.	4	B2
CYLINDER HEAD, RR.	6	B3
FENDER, FR.	62	D8
FENDER, RR.	100	F3
FINAL DRIVEN GEAR	73	E1
FORK, FR.	63	D8
FR. BRAKE MASTER CYLINDER	54	D4
FRAME	110	F8
FUEL PUMP	84	E7
FUEL TANK	77	E3
GASKET KIT A	44	C10
GASKET KIT B	46	C11
GEARSHIFT DRUM	34	C5
HANDLEBAR	58	D6
HEADLIGHT	48	D1
HORN	60	D7
IGNITION COIL	106	F6
MUFFLER	88	E9
OIL FILTER	23	B11
OIL PUMP	23	B11
PISTON	28	C2
RADIATOR	108	F7
SEAT	80	E5
SHOCK ABSORBER	98	F2
SIDE COVER	82	E6
SPARK UNIT	100	F3
SPEEDOMETER	50	D2
STAND	94	E12
STARTING DRIVEN GEAR	16	B8
STARTING MOTOR	21	B10
STEERING STEM	60	D7
STEP	92	E11
SWINGARM	96	E12
SWITCH	52	D3
TACHOMETER	50	D2
TAILLIGHT	104	F5
TENSIONER	10	B5
THERMOSTAT	36	C6
TOOLS	112	F9
TOP BRIDGE	58	D6
TRANSMISSION	32	C4
TURN SIGNAL	102	F4
VALVE	8	B4
WATER PIPE	36	C6
WATER PUMP	19	B9
WHEEL, FR.	68	D11
WHEEL, RR.	72	E1
WIRE HARNESS	106	F6

GRID **E7**

AIR CLEANER

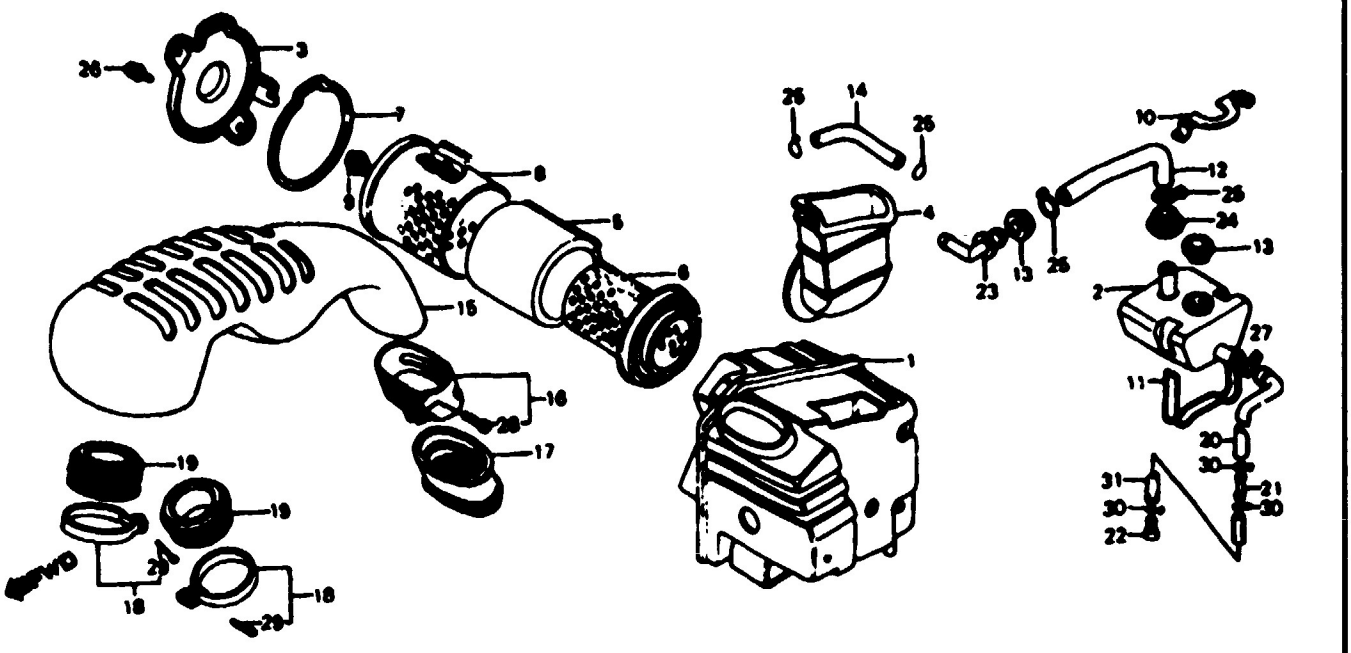

F14ME9010

VT750C'83

Ref. No.	DESCRIPTION (BLOCK NO. F-19)	FRAME SERIAL NUMBER FROM	FRAME SERIAL NUMBER TO	QTY REQ	PART NUMBER	HONDA CODE
1	CASE COMP., AIR CLEANER	-------	-------	1	17210-ME9-000	1367572
	CASE COMP., AIR CLEANER	-------	-------	1	17210-ME9-010	1557495
2	TANK, STORAGE	-------	-------	1	17211-ME9-000	1367580
3	CAP, AIR CLEANER ELEMENT	-------	-------	1	17212-ME9-000	1367598
4	TUBE, AIR CLEANER DUCT	-------	-------	1	17213-ME9-670	1367606
5	ELEMENT, AIR CLEANER	-------	-------	1	17215-ME9-000	1367614
	ELEMENT, AIR CLEANER	-------	-------	1	17215-ME9-770	1535731
6	HOLDER, ELEMENT	-------	-------	1	17216-ME9-000	1367622
7	SEAL, AIR CLEANER CAP	-------	-------	1	17217-ME9-000	1367630
8	PROTECTOR, ELEMENT	-------	-------	1	17218-ME9-000	1367648
9	GROMMET, AIR CLEANER ELEMENT	-------	-------	1	17221-ME9-000	1367655
10	HOOK, STORAGE TANK	-------	-------	1	17223-ME9-000	1367663
11	HANGER, STRAGE TANK	-------	-------	1	17224-ME9-000	1367671
12	TUBE, BREATHER	-------	-------	1	17225-ME9-000	1367689
13	GROMMET, TUBE	-------	-------	2	17227-ME9-300	1367697
14	TUBE, ENGINE BREATHER	-------	-------	1	17228-ME9-000	1413319

© AMERICAN HONDA MOTOR CO. LTD. 1983

VT750C'83 ENGINE NO.; RC14E-2000051 TO 2022747
VT750C'83 FRAME NO.; RC140-DM000035 TO DM022807

VT750C'83

BLOCK NO. F-19

Ref. No.	DESCRIPTION	FRAME SERIAL NUMBER FROM	FRAME SERIAL NUMBER TO	QTY REQ	PART NUMBER	HONDA CODE
15	CHAMBER, AIR CLEANER	-------	-------	1	17251-ME9-000	1367705
16	BAND, AIR CLEANER	-------	-------	1	17254-ME9-000	1367713
17	TUBE, AIR CLEANER CONNECTING	-------	-------	1	17255-ME9-000	1367721
18	BAND ASSY., AIR CLEANER CONNECTING TUBE	-------	-------	2	17256-425-010	0717595
19	TUBE, AIR CLEANER CHAMBER CONNECTING	-------	-------	2	17257-ME9-300	1367739
20	TUBE, DRAIN	-------	-------	1	17335-ME9-000	1374305
21	JOINT, BREATHER TUBE	-------	-------	1	17359-419-670	0631325
22	PLUG, BREATHER TUBE	-------	-------	1	17370-419-700	0669002
23	JOINT, BREATHER TUBE	-------	-------	1	17402-ME9-000	1367747
24	GROMMET, STORAGE TANK	-------	-------	1	17552-MA1-000	1053511
25	CLIP, SUB TANK HOSE	-------	-------	4	17724-102-700	0290213
26	SCREW, TORUS, 6X7	-------	-------	2	90102-673-003	0810655
27	CLIP, AIR HOSE, 16	-------	-------	1	90646-657-000	0660563
28	BOLT, SLOT, 6X20	-------	-------	1	92300-06020-0A	1040245
29	SCREW, PAN, 5X25	-------	-------	2	93500-05025-06	0477471
30	CLIP, TUBE, B12.5	-------	-------	3	95002-02130	0323352
31	TUBE, VINYL, 8X12X100	-------	-------	1	95003-23010-31	1374321

© AMERICAN HONDA MOTOR CO., LTD. 1983

CONTENTS

TITLE	PAGE	GRID
AIR CLEANER	86	E8
ALTERNATOR	17	B8
BATTERY	84	E7
BRAKE CALIPER, FR	66	D10
BRAKE PANEL, RR	70	D12
BRAKE PEDAL	90	E10
CABLE	52	D3
CAM CHAIN	10	B5
CAMSHAFT	8	B4
CARBURETOR ASSY.	41	C8
CARBURETOR COMPONENT	42	C9
CHANGE PEDAL	90	E10
CLUTCH	13	B6
CLUTCH MASTER CYLINDER	56	D5
CRANKCASE	26	C1
CRANKCASE COVER, L	17	B8
CRANKCASE COVER, R	11	B5
CRANKSHAFT	28	C2
CROSS SHAFT	38	C7
CYLINDER	4	B2
CYLINDER	6	B3
CYLINDER HEAD COVER	2	B1
CYLINDER HEAD, FR	4	B2
CYLINDER HEAD, RR	6	B3
FENDER, FR	62	D8
FENDER, RR	100	F3
FINAL DRIVEN GEAR	73	E1
FORK, FR	63	D8
FR. BRAKE MASTER CYLINDER	54	D4
FRAME	110	F8
FUEL PUMP	84	E7
FUEL TANK	77	E3
GASKET KIT A	44	C10
GASKET KIT B	46	C11
GEARSHIFT DRUM	34	C5
HANDLEBAR	58	D6
HEADLIGHT	48	D1
HORN	60	D7
IGNITION COIL	106	F6
MUFFLER	88	E9
OIL FILTER	23	B11
OIL PUMP	23	B11
PISTON	28	C2
RADIATOR	108	F7
SEAT	80	E5
SHOCK ABSORBER	98	F2
SIDE COVER	82	E6
SPARK UNIT	100	F3
SPEEDOMETER	50	D2
STAND	94	E12
STARTING DRIVEN GEAR	16	B6
STARTING MOTOR	21	B10
STEERING STEM	60	D7
STEP	92	E11
SWINGARM	95	E12
SWITCH	52	D3
TACHOMETER	50	D2
TAILLIGHT	104	F5
TENSIONER	10	B5
THERMOSTAT	36	C6
TOOLS	112	F9
TOP BRIDGE	58	D6
TRANSMISSION	32	C4
TURN SIGNAL	102	F4
VALVE	8	B4
WATER PIPE	36	C6
WATER PUMP	19	B9
WHEEL, FR	68	D11
WHEEL, RR	72	E1
WIRE HARNESS	106	F6

GRID **E8**

MUFFLER

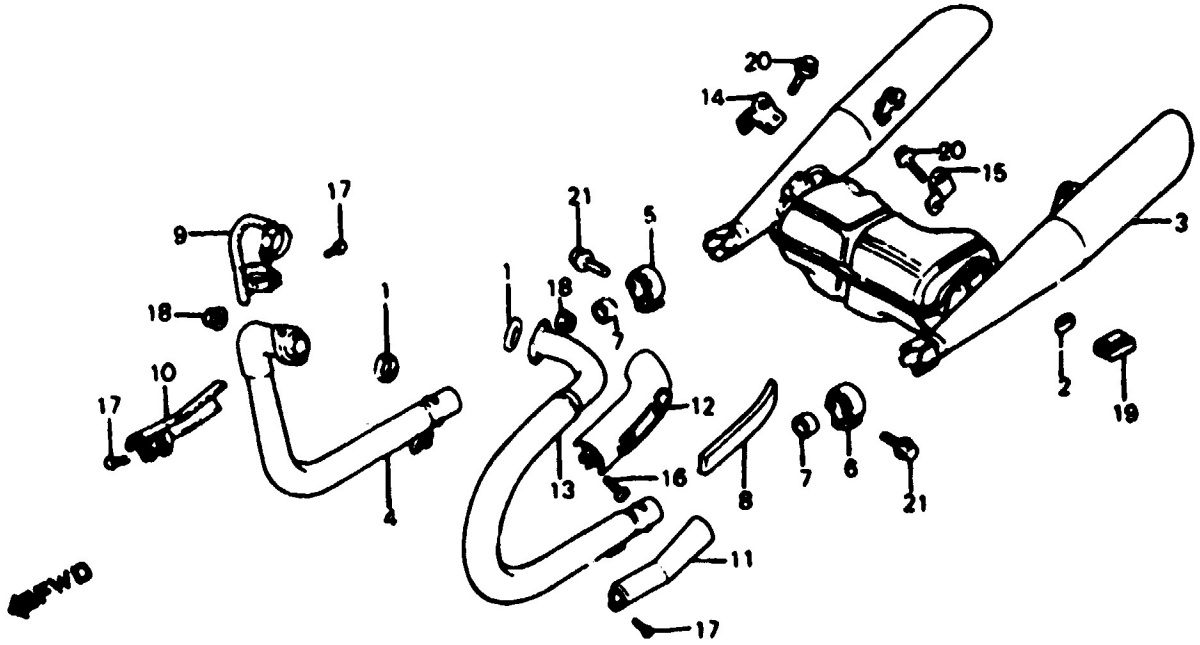

F14ME8020

Ref. No.	DESCRIPTION	FRAME SERIAL NUMBER FROM	FRAME SERIAL NUMBER TO	QTY REQ	PART NUMBER	HONDA CODE
	VT750C'83 BLOCK NO. F-20					
1	GASKET, EX. PIPE	-------	-------	2	18291-ME9-000	1367929
2	RUBBER, PROTECTOR PACKING	-------	-------	4	18293-ME9-000	1455179
3	CHAMBER COMP., EX.	-------	-------	1	18300-ME9-671	1367937
	CHAMBER COMP., EX.	-------	-------	1	18300-ME9-771	1535947
4	PIPE, R. EX.	-------	-------	1	18320-ME9-000	1367945
	PIPE, R. EX.	-------	-------	1	18320-ME9-771	1535954
5	BAND, R. MUFFLER	-------	-------	1	18376-ME9-003	1374339
6	BAND, L. MUFFLER	-------	-------	1	18377-ME9-003	1374347
7	GASKET, MUFFLER	-------	-------	2	18392-449-000	0790329
8	PROTECTOR, EX. SUB	-------	-------	1	18413-ME9-670	1441773
	PROTECTOR, EX. SUB	-------	-------	1	18413-MG8-000	2045540
9	PROTECTOR, R. FR. EX. PIPE	-------	-------	1	18415-ME9-000	1436112
	PROTECTOR, R. FR. EX. PIPE	-------	-------	1	18415-ME9-771	1535962
10	PROTECTOR, R. RR. EX. PIPE	-------	-------	1	18416-ME9-000	1367960
11	PROTECTOR, L. RR. EX. PIPE	-------	-------	1	18417-ME9-000	1367978
12	PROTECTOR, L. FR. EX.	-------	-------	1	18418-ME9-670	1505775

© AMERICAN HONDA MOTOR CO., LTD. 1983

VT750C'83 ENGINE NO.; RC14E-2000051 TO 2022747
VT750C'83 FRAME NO.; RC14C-DM000035 TO DM022807

VT750C'83

BLOCK NO. F-20

Ref. No.	DESCRIPTION	FRAME SERIAL NUMBER FROM	FRAME SERIAL NUMBER TO	QTY REQ	PART NUMBER	HONDA CODE
12	PROTECTOR, L. FR. EX. PIPE	-------	-------	1	18418-ME9-770	1535970
13	PIPE, L. EX.	-------	-------	1	18420-ME9-000	1367986
	PIPE, L. EX.	-------	-------	1	18420-ME9-771	1535988
14	BRACKET, R. EX. CHAMBER	-------	-------	1	18455-ME9-003	1368000
15	BRACKET, L. EX. CHAMBER	-------	-------	1	18456-ME9-003	1368018
16	SCREW, PAN, 6X12	-------	-------	2	93500-06012-0A	0182360
17	SCREW, PAN 6X16	-------	-------	6	93500-06016	0057455
	SCREW, PAN, 6X16	-------	-------	6	93500-06016-0A	0848879
18	NUT, FLANGE, 6MM	-------	-------	4	94050-06000	0471623
19	RUBBER A, STAND STOPPER	-------	-------	1	95011-61000	0255638
20	BOLT, FLANGE, 6X10	-------	-------	4	95700-06010-08	0344952
	BOLT, FLANGE, 6X10	-------	-------	4	95701-06010-08	2204709
21	BOLT, FLANGE, 8X35	-------	-------	4	95700-08035-00	0496489
	BOLT, FLANGE, 8X35	-------	-------	4	95701-08035-00	2724029

© AMERICAN HONDA MOTOR CO., LTD. 1983

CONTENTS

TITLE	PAGE	GRID
AIR CLEANER	86	E8
ALTERNATOR	17	B8
BATTERY	84	E7
BRAKE CALIPER, FR.	66	D10
BRAKE PANEL, RR.	70	D12
BRAKE PEDAL	90	E10
CABLE	52	D3
CAM CHAIN	10	B5
CAMSHAFT	8	B4
CARBURETOR ASSY.	41	C8
CARBURETOR COMPONENT	42	C9
CHANGE PEDAL	90	E10
CLUTCH	13	B6
CLUTCH MASTER CYLINDER	56	D5
CRANKCASE	26	C1
CRANKCASE COVER, L.	17	B8
CRANKCASE COVER, R.	11	B5
CRANKSHAFT	28	C2
CROSS SHAFT	38	C7
CYLINDER	4	B2
CYLINDER	6	B3
CYLINDER HEAD COVER	2	B1
CYLINDER HEAD, FR.	4	B2
CYLINDER HEAD, RR.	6	B3
FENDER, FR.	62	D8
FENDER, RR.	100	F3
FINAL DRIVEN GEAR	73	E1
FORK, FR.	63	D8
FR. BRAKE MASTER CYLINDER	54	D4
FRAME	110	F8
FUEL PUMP	84	E7
FUEL TANK	77	E3
GASKET KIT A	44	C10
GASKET KIT B	46	C11
GEARSHIFT DRUM	34	C5
HANDLEBAR	58	D6
HEADLIGHT	48	D1
HORN	60	D7
IGNITION COIL	106	F6
MUFFLER	88	E9
OIL FILTER	23	B11
OIL PUMP	23	B11
PISTON	28	C2
RADIATOR	108	F7
SEAT	80	E5
SHOCK ABSORBER	98	F2
SIDE COVER	82	E6
SPARK UNIT	100	F3
SPEEDOMETER	50	D2
STAND	94	E12
STARTING DRIVEN GEAR	16	B8
STARTING MOTOR	21	B10
STEERING STEM	60	D7
STEP	92	E11
SWINGARM	95	E12
SWITCH	52	D3
TACHOMETER	50	D2
TAILLIGHT	104	F5
TENSIONER	10	B5
THERMOSTAT	36	C6
TOOLS	112	F9
TOP BRIDGE	58	D6
TRANSMISSION	32	C4
TURN SIGNAL	102	F4
VALVE	8	B4
WATER PIPE	36	C6
WATER PUMP	19	B9
WHEEL, FR.	68	D11
WHEEL, RR.	72	E1
WIRE HARNESS	106	F6

GRID **E9**

BRAKE PEDAL • CHANGE PEDAL

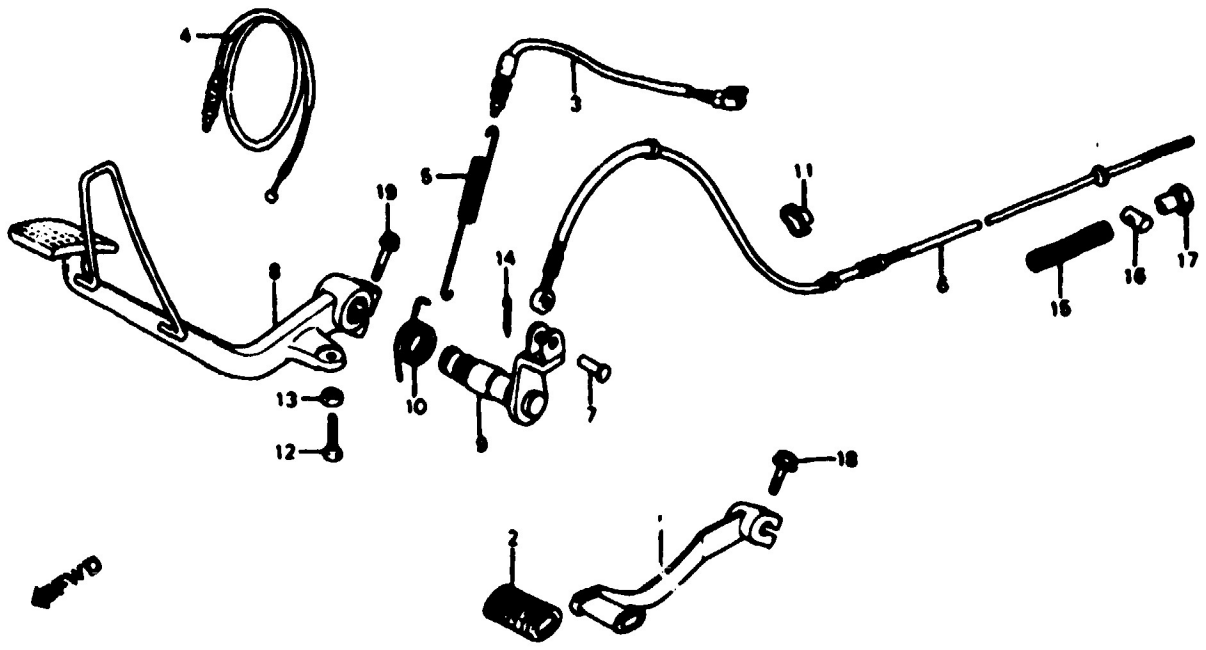

F14ME9021

Ref. No.	DESCRIPTION	FRAME SERIAL NUMBER FROM	FRAME SERIAL NUMBER TO	QTY REQ	PART NUMBER	HONDA CODE
	VT750C'83 BLOCK NO. F-21					
1	PEDAL, GEAR CHANGE	-------	-------	1	24700-ME9-670	1413434
2	RUBBER, GEARSHIFT PEDAL	-------	-------	1	24781-419-000	0494377
3	SWITCH ASSY., RR. STOP	-------	-------	1	35350-MB0-000	1246867
	SWITCH ASSY., RR. STOP	-------	-------	1	35350-ME9-405	3822384
	SWITCH ASSY., RR. STOP	-------	-------	1	35350-ME9-770	1562305
4	CABLE COMP., RR. STOP	-------	-------	1	35355-ME9-003	1436153
5	SPRING, STOP SWITCH	-------	-------	1	35357-ME9-000	1374396
6	CABLE COMP., RR. BRAKE	-------	-------	1	43450-ME9-671	1370030
7	PIN, BRAKE CABLE JOINT	-------	-------	1	43456-ME9-000	1370048
8	PEDAL COMP., RR. BRAKE	-------	-------	1	46500-ME9-000	1370196
9	SPINDLE COMP., RR. BRAKE	-------	-------	1	46510-ME9-000	1370204
10	SPRING, BRAKE PEDAL	-------	-------	1	46514-ME9-000	1370212
11	CLAMP, SPEEDOMETER SENSOR CORD	-------	-------	1	61108-MB0-000	1249986
12	BOLT, HEX., 6X20	-------	-------	1	92000-06020	0054270
	BOLT, HEX., 6X20	-------	-------	1	92000-06020-0A	0630467
	BOLT, HEX., 6X20	-------	-------	1	92101-06020-0A	2528925

© AMERICAN HONDA MOTOR CO., LTD. 1983

VT750C'83 ENGINE NO.; RC14E-2000051 TO 2022747
VT750C'83 FRAME NO.; RC140-DM000035 TO DM022807

VT750C'83 BLOCK NO. F-21 Ref. No. DESCRIPTION	FRAME SERIAL NUMBER FROM	FRAME SERIAL NUMBER TO	QTY REQ	PART NUMBER	HONDA CODE
13 NUT, HEX., 6MM	-------	-------	1	94001-06000-0S	0156067
NUT, HEX., 6MM	-------	-------	1	94001-06200-0S	2043255
14 PIN, SPLIT, 1.6X15	-------	-------	1	94201-16150	0058313
PIN, SPLIT, 1.6X25	-------	-------	1	94201-16250	0058339
15 SPRING A, BRAKE ROD	-------	-------	1	95014-73100	0271056
16 JOINT B, BRAKE ARM	-------	-------	1	95015-32001	0400945
17 NUT B, BRAKE ROD ADJUSTING	-------	-------	1	95015-42000	0257766
18 BOLT, FLANGE, 6X20	-------	-------	1	95700-06020	0292029
BOLT, FLANGE, 6X20	-------	-------	1	95700-06020-00	0488684
BOLT, FLANGE, 6X20	-------	-------	1	95701-06020-00	2105815
BOLT, FLANGE, 6X20	-------	-------	1	95900-06020-00	1954767
19 BOLT, FLANGE, 6X20	-------	-------	1	95700-06020-00	0488684
BOLT, FLANGE, 6X20	-------	-------	1	95701-06020-00	2105815

© AMERICAN HONDA MOTOR CO. LTD. 1983

CONTENTS

TITLE	PAGE	GRID
AIR CLEANER	86	E8
ALTERNATOR	17	B8
BATTERY	84	E7
BRAKE CALIPER, FR	66	D10
BRAKE PANEL, RR	70	D12
BRAKE PEDAL	90	E10
CABLE	52	D3
CAM CHAIN	10	B5
CAMSHAFT	8	B4
CARBURETOR ASSY	41	C8
CARBURETOR COMPONENT	42	C9
CHANGE PEDAL	90	E10
CLUTCH	13	B6
CLUTCH MASTER CYLINDER	56	D5
CRANKCASE	26	C1
CRANKCASE COVER, L	17	B8
CRANKCASE COVER, R	11	B5
CRANKSHAFT	28	C2
CROSS SHAFT	38	C7
CYLINDER	4	B2
CYLINDER	6	B3
CYLINDER HEAD COVER	2	B1
CYLINDER HEAD, FR	4	B2
CYLINDER HEAD, RR	6	B3
FENDER, FR	62	D8
FENDER, RR	100	F3
FINAL DRIVEN GEAR	73	E1
FORK, FR	63	D8
FR. BRAKE MASTER CYLINDER	54	D4
FRAME	110	F8
FUEL PUMP	84	E7
FUEL TANK	77	E3
GASKET KIT A	44	C10
GASKET KIT B	46	C11
GEARSHIFT DRUM	34	C5
HANDLEBAR	58	D6
HEADLIGHT	48	D1
HORN	80	D7
IGNITION COIL	106	F6
MUFFLER	88	E9
OIL FILTER	23	B11
OIL PUMP	23	B11
PISTON	28	C2
RADIATOR	108	F7
SEAT	80	E5
SHOCK ABSORBER	98	F2
SIDE COVER	82	E6
SPARK UNIT	100	F3
SPEEDOMETER	50	D2
STAND	94	E12
STARTING DRIVEN GEAR	16	B9
STARTING MOTOR	21	B10
STEERING STEM	60	D7
STEP	92	E11
SWINGARM	95	E12
SWITCH	52	D3
TACHOMETER	50	D2
TAILLIGHT	104	F5
TENSIONER	10	B5
THERMOSTAT	36	C6
TOOLS	112	F9
TOP BRIDGE	58	D6
TRANSMISSION	32	C4
TURN SIGNAL	102	F4
VALVE	8	B4
WATER PIPE	36	C6
WATER PUMP	19	B9
WHEEL, FR	68	D11
WHEEL, RR	72	E1
WIRE HARNESS	106	F6

GRID **E10**

STEP

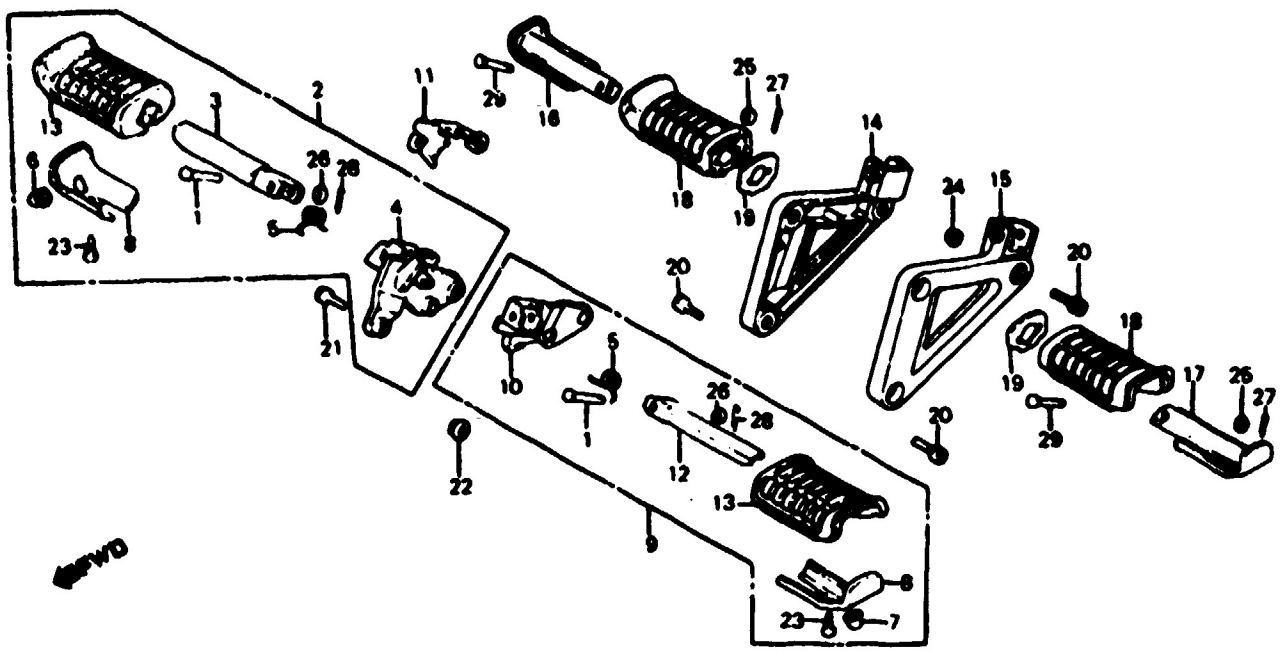

VT750C'83

BLOCK NO. F-22

Ref. No.	DESCRIPTION	FRAME SERIAL NUMBER FROM	FRAME SERIAL NUMBER TO	QTY REQ	PART NUMBER	HONDA CODE
1	PIN, STEP BAR JOINT	-------	-------	2	50603-033-000	0019349
2	STEP ASSY., R. MAIN	-------	-------	1	50610-ME9-670	1374404
3	BAR COMP., R. STEP	-------	-------	1	50612-ME9-000	1436211
4	BRACKET COMP., R. STEP	-------	-------	1	50615-ME9-670	1374412
5	SPRING, STEP RETURN	-------	-------	2	50617-195-000	1248913
6	SLIDER, STEP	-------	-------	1	50618-MB1-000	1248939
7	SLIDER, STEP	-------	-------	1	50618-MF5-000	1398791
8	STOPPER, STEP RUBBER	-------	-------	2	50619-MB1-000	1248954
9	STEP ASSY., L. MAIN	-------	-------	1	50620-ME9-670	1374420
10	BRACKET COMP., L. STEP	-------	-------	1	50625-ME9-670	1374438
11	COVER, STEP	-------	-------	1	50626-ME9-670	1436229
12	BAR COMP., L. STEP	-------	-------	1	50642-ME9-000	1436237
13	RUBBER, MAIN FOOTPEG	-------	-------	2	50661-ME9-000	1370345
14	HOLDER, R. PILLION STEP	-------	-------	1	50680-ME9-000	1370352
15	HOLDER, L. PILLION STEP	-------	-------	1	50690-ME9-000	1370360
16	BAR, R. PILLION STEP	-------	-------	1	50711-ME9-000	1370386

© AMERICAN HONDA MOTOR CO. LTD. 1983

VT750C'83 ENGINE NO.; RC14E-2000051 TO 2022747
VT750C'83 FRAME NO.; RC140-DM000035 TO DM022807

VT750C'83

BLOCK NO. F-22

Ref. No.	DESCRIPTION	FRAME SERIAL NUMBER FROM	FRAME SERIAL NUMBER TO	QTY REQ	PART NUMBER	HONDA CODE
17	BAR, L. PILLION STEP	-------	-------	1	50712-ME9-000	1370394
18	RUBBER, PILLION STEP	-------	-------	2	50713-MB1-000	1249150
19	WASHER, PILLION STEP	-------	-------	2	50714-MB1-000	1249176
20	BOLT, SOCKET, 8X22	-------	-------	6	90119-KV0-000	2890374
	BOLT, SOCKET, 8X22	-------	-------	6	90119-MB4-000	1388784
21	BOLT, SOCKET, 8X22	DM019978	-------	2	90142-ME5-000	1330893
	BOLT, SOCKET, 8X20	-------	DM019977	2	90157-MF5-000	1451772
22	NUT, FLANGE, 10MM	-------	-------	2	90303-428-900	1078187
23	BOLT, HEX., 6X16	-------	-------	2	92000-06016-0A	0313197
	BOLT, HEX., 6X16	-------	-------	2	92100-06016-0A	1685726
	BOLT, HEX., 6X16	-------	-------	2	92101-06016-0A	2479590
24	NUT, FLANGE, 8MM	-------	-------	2	94050-08080	0468447
25	WASHER, PLAIN, 6MM	-------	-------	2	94101-06000	0059071
	WASHER, PLAIN, 6MM	-------	-------	2	94101-06080	3136074
	WASHER, PLAIN, 6MM	-------	-------	2	94101-06800	0345900
26	WASHER, PLAIN, 8MM	-------	-------	2	94101-08000	0059097
27	PIN, SPLIT, 1.6X10	-------	-------	2	94201-16100	0262089
28	PIN, SPLIT, 1.6X15	-------	-------	2	94201-16150	0058313
	PIN, SPLIT, 1.6X25	-------	-------	2	94201-16250	0058339
29	PIN C, PILLION STEP	-------	-------	2	95015-83000	0274118

© AMERICAN HONDA MOTOR CO., LTD. 1983

CONTENTS

TITLE	PAGE	GRID
AIR CLEANER	86	E8
ALTERNATOR	17	B8
BATTERY	84	E7
BRAKE CALIPER, FR.	66	D10
BRAKE PANEL, RR.	70	D12
BRAKE PEDAL	90	E10
CABLE	52	D3
CAM CHAIN	10	B5
CAMSHAFT	8	B4
CARBURETOR ASSY.	41	C8
CARBURETOR COMPONENT	42	C9
CHANGE PEDAL	90	E10
CLUTCH	13	B6
CLUTCH MASTER CYLINDER	56	D5
CRANKCASE	26	C1
CRANKCASE COVER, L.	17	B8
CRANKCASE COVER, R.	11	B5
CRANKSHAFT	28	C2
CROSS SHAFT	38	C7
CYLINDER	4	B2
CYLINDER	6	B3
CYLINDER HEAD COVER	2	B1
CYLINDER HEAD, FR.	4	B2
CYLINDER HEAD, RR.	6	B3
FENDER, FR.	62	D8
FENDER, RR.	100	F3
FINAL DRIVEN GEAR	73	E1
FORK, FR.	63	D8
FR. BRAKE MASTER CYLINDER	54	D4
FRAME	110	F8
FUEL PUMP	84	E7
FUEL TANK	77	E3
GASKET KIT A	44	C10
GASKET KIT B	46	C11
GEARSHIFT DRUM	34	C5
HANDLEBAR	58	D6
HEADLIGHT	48	D1
HORN	60	D7
IGNITION COIL	106	F6
MUFFLER	88	E9
OIL FILTER	23	B11
OIL PUMP	23	B11
PISTON	28	C2
RADIATOR	108	F7
SEAT	80	E5
SHOCK ABSORBER	98	F2
SIDE COVER	82	E6
SPARK UNIT	100	F3
SPEEDOMETER	50	D2
STAND	94	E12
STARTING DRIVEN GEAR	16	B8
STARTING MOTOR	21	B10
STEERING STEM	60	D7
STEP	92	E11
SWINGARM	95	E12
SWITCH	52	D3
TACHOMETER	50	D2
TAILLIGHT	104	F5
TENSIONER	10	B5
THERMOSTAT	36	C6
TOOLS	112	F9
TOP BRIDGE	58	D6
TRANSMISSION	32	C4
TURN SIGNAL	102	F4
VALVE	8	B4
WATER PIPE	36	C6
WATER PUMP	19	B9
WHEEL, FR.	68	D11
WHEEL, RR.	72	E1
WIRE HARNESS	106	F6

GRID E11

STAND

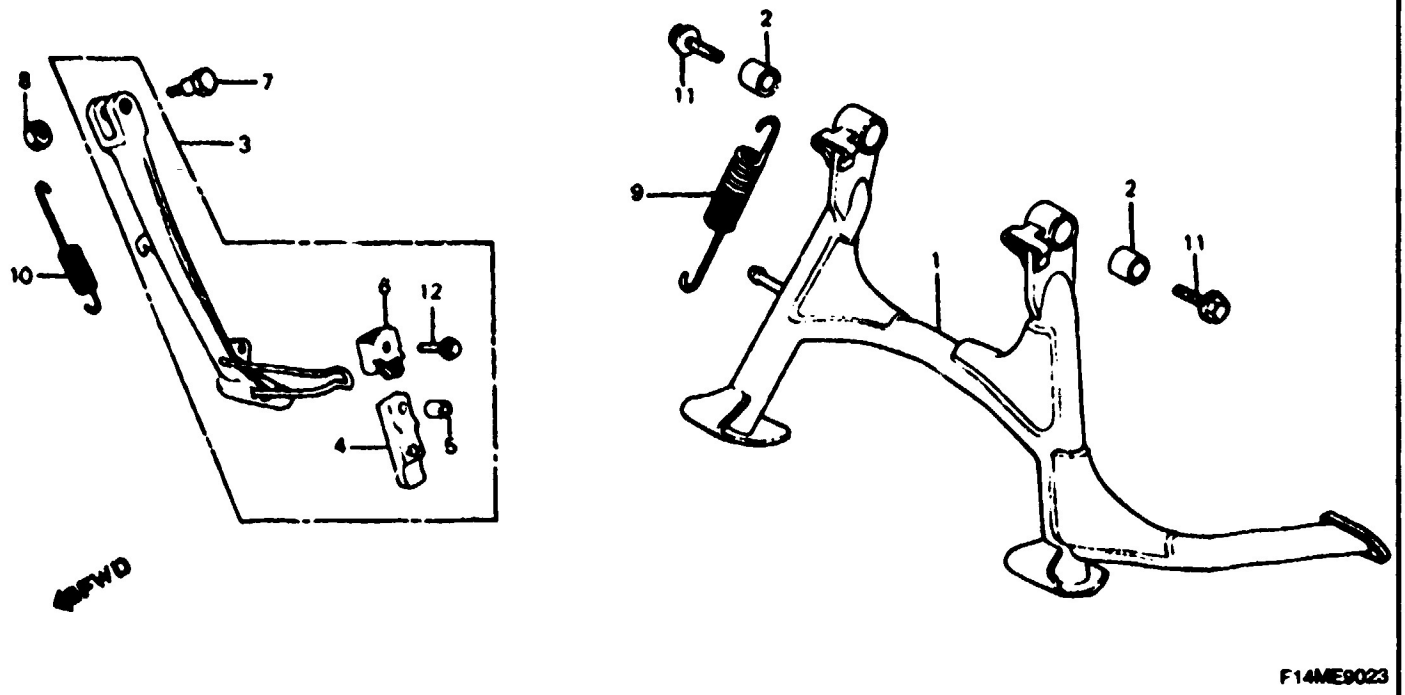

F14ME9023

Ref. No.	DESCRIPTION	FRAME SERIAL NUMBER FROM	FRAME SERIAL NUMBER TO	QTY REQ	PART NUMBER	HONDA CODE
	VT750C'83 BLOCK NO. F-23					
1	STAND COMP., MAIN	-------	-------	1	50500-ME9-000	1370279
2	COLLAR, MAIN STAND	-------	-------	2	50526-ME9-000	1370287
3	BAR ASSY., SIDE STAND	-------	-------	1	50540-ME9-000	1370295
4	RUBBER, STAND	-------	-------	1	50548-356-700	0382648
5	COLLAR, STAND RUBBER SETTING	-------	-------	1	50549-356-700	0382655
6	BRACKET, SIDE STAND RUBBER	-------	-------	1	50574-MB0-000	1248830
7	BOLT, SIDE STAND PIVOT	-------	-------	1	90108-MB0-000	1250943
8	NUT, HEX., 10MM	-------	-------	1	94031-10070	1251826
9	SPRING G, MAIN STAND	-------	-------	1	95014-71702	0414250
10	SPRING D, SIDE STAND	-------	-------	1	95014-72402	0414268
11	BOLT, FLANGE, 10X35	-------	-------	2	95800-10035-08	0681320
	BOLT, FLANGE, 10X40	-------	-------	2	95800-10040-08	0612861
	BOLT, FLANGE, 10X40	-------	-------	2	95801-10040-08	2374874
	BOLT, FLANGE, 10X35	-------	-------	2	96400-10040-08	2729077
12	BOLT, FLANGE, 6X25	-------	-------	1	96000-06025-07	1251941
	BOLT, FLANGE, 6X25	-------	-------	1	96001-06025-07	2105997

 © AMERICAN HONDA MOTOR CO., LTD. 1983

VT750C'83 ENGINE NO.; RC14E-2000051 TO 2022747
VT750C'83 FRAME NO.; RC140-DM000035 TO DM022807

SWINGARM

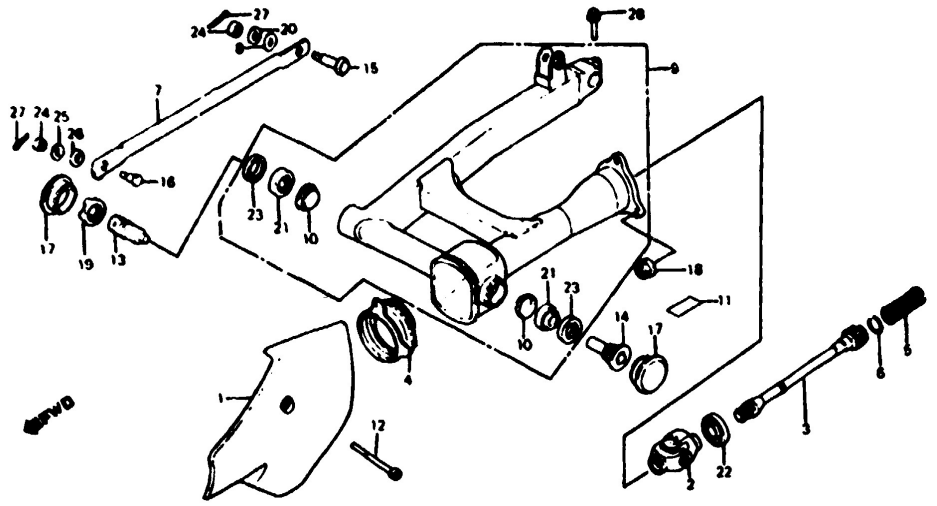

"CAUTION OR WARNING LABELS MUST BE ORDERED SEPARATELY WHEN APPLICABLE" F14ME9024

VT750C'83

BLOCK NO. F-24

Ref. No.	DESCRIPTION	FRAME SERIAL NUMBER FROM	FRAME SERIAL NUMBER TO	QTY REQ	PART NUMBER	HONDA CODE
1	COVER, L. RR.	-------	-------	1	11341-ME9-000	1366772
2	JOINT COMP., YOKE	-------	-------	1	40200-ME9-003	1369370
3	SHAFT, PROPELLER	-------	-------	1	40201-ME9-003	1369388
4	BOOT, JOINT	-------	-------	1	40207-ME9-000	1369396
5	SPRING, PROPELLER SHAFT	-------	-------	1	40215-ME9-003	1369404
6	RING, STOPPER	-------	-------	1	40221-MB0-000	1247451
7	ARM, RR. BRAKE STOPPER	-------	-------	1	43431-ME9-000	1370022
	ARM, RR. BRAKE STOPPER	-------	-------	1	43431-ME9-010	2575645
8	RUBBER, STOPPER ARM	-------	-------	1	43434-ME1-670	1211655
9	SWINGARM ASSY., RR.	-------	-------	1	52100-ME9-000	1370469
10	PLATE, DUST SEAL	-------	-------	2	52118-415-000	0669911
11	MARK, TIRE CAUTION	-------	-------	1	87505-ME9-670	1370808
12	BOLT, SOCKET, 6X35	-------	-------	1	90074-ME9-000	1414655
	BOLT, SOCKET, 6X35	-------	-------	1	90119-ME9-000	1371053
13	BOLT, R. RR. SWINGARM PIVOT	-------	-------	1	90121-ME5-000	1330851
14	BOLT, L. RR. SWINGARM PIVOT	-------	-------	1	90124-ME9-000	1371103

© AMERICAN HONDA MOTOR CO., LTD. 1993

CONTENTS

TITLE	PAGE	GRID
AIR CLEANER	86	E8
ALTERNATOR	17	B8
BATTERY	84	E7
BRAKE CALIPER, FR.	66	D10
BRAKE PANEL, RR.	70	D12
BRAKE PEDAL	90	E10
CABLE	52	D3
CAM CHAIN	10	B6
CAMSHAFT	8	B4
CARBURETOR ASSY.	41	C8
CARBURETOR COMPONENT	42	C9
CHANGE PEDAL	90	E10
CLUTCH	13	B6
CLUTCH MASTER CYLINDER	56	D5
CRANKCASE	26	C1
CRANKCASE COVER, L.	17	B8
CRANKCASE COVER, R.	11	B5
CRANKSHAFT	28	C2
CROSS SHAFT	38	C7
CYLINDER	4	B2
CYLINDER	6	B3
CYLINDER HEAD COVER	2	B1
CYLINDER HEAD, FR.	4	B2
CYLINDER HEAD, RR.	6	B3
FENDER, FR.	62	D8
FENDER, RR.	100	F3
FINAL DRIVEN GEAR	73	E1
FORK, FR.	63	D6
FR. BRAKE MASTER CYLINDER	54	D4
FRAME	110	F8
FUEL PUMP	84	E7
FUEL TANK	77	E3
GASKET KIT A	44	C10
GASKET KIT B	46	C11
GEARSHIFT DRUM	34	C5
HANDLEBAR	58	D6
HEADLIGHT	48	D1
HORN	80	D7
IGNITION COIL	106	F6
MUFFLER	88	E9
OIL FILTER	23	B11
OIL PUMP	23	B11
PISTON	28	C2
RADIATOR	108	F7
SEAT	80	E5
SHOCK ABSORBER	98	F2
SIDE COVER	82	E6
SPARK UNIT	100	F3
SPEEDOMETER	50	D2
STAND	94	E12
STARTING DRIVEN GEAR	16	B8
STARTING MOTOR	21	B10
STEERING STEM	60	D7
STEP	92	E11
SWINGARM	95	E12
SWITCH	52	D3
TACHOMETER	50	D2
TAILLIGHT	104	F5
TENSIONER	10	B5
THERMOSTAT	36	C6
TOOLS	112	F8
TOP BRIDGE	58	D6
TRANSMISSION	32	C4
TURN SIGNAL	102	F4
VALVE	8	B4
WATER PIPE	36	C6
WATER PUMP	19	B9
WHEEL, FR.	68	D11
WHEEL, RR.	72	E1
WIRE HARNESS	106	F6

GRID **E12**

SWINGARM

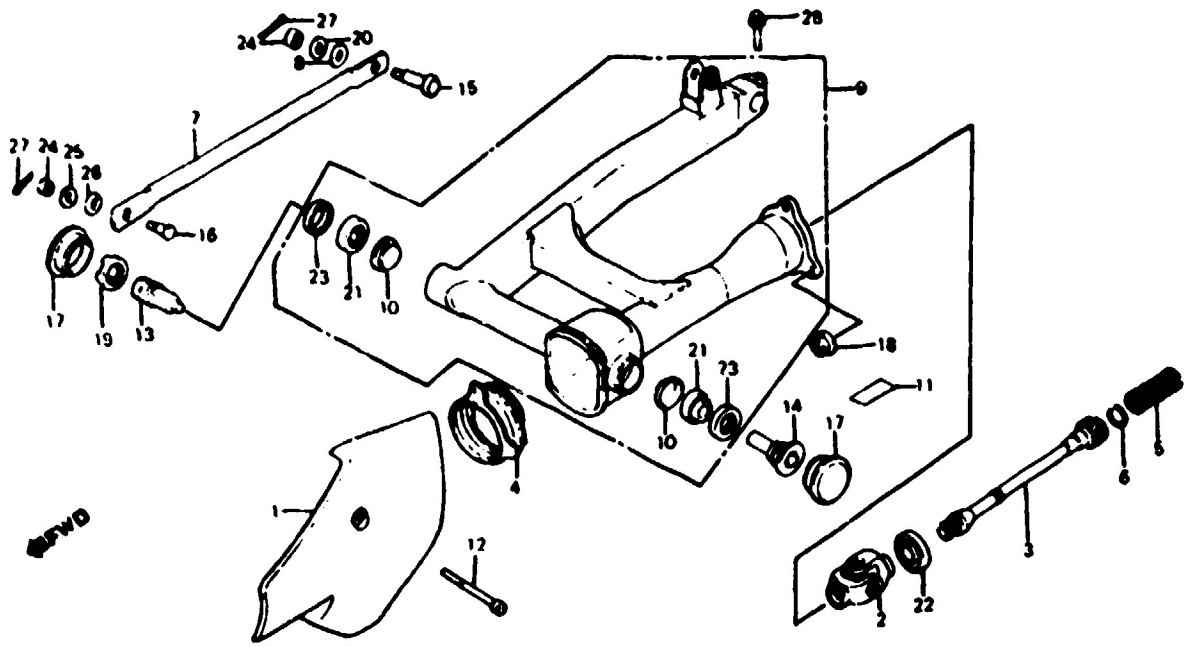

"CAUTION OR WARNING LABELS MUST BE ORDERED SEPARATELY WHEN APPLICABLE" F14ME9024

VT750C'83

BLOCK NO. F-24

Ref. No.	DESCRIPTION	FRAME SERIAL NUMBER FROM	FRAME SERIAL NUMBER TO	QTY REQ	PART NUMBER	HONDA CODE
15	BOLT, RR. BRAKE STOPPER	-------	-------	1	90127-393-000	0446633
16	BOLT, RR. BRAKE STOPPER ARM	-------	-------	1	90133-286-000	0155044
17	CAP, R. LOCK NUT	-------	-------	2	90302-ME5-000	1330976
18	NUT, HEX., 10MM	-------	-------	3	90308-357-000	0322156
19	NUT, LOCK, 23MM	-------	-------	1	90354-ME5-000	1366418
20	WASHER, 8MM	-------	-------	1	90505-425-000	0709766
21	BEARING, 30202 (TOYO)	-------	-------	2	91066-415-003	1374446
	BEARING, 30202 (NACHI)	-------	-------	2	91066-415-004	1378538
	BEARING, 30202 (KOYO)	-------	-------	2	91066-415-005	1378546
	BEARING, 30202 (NIPPON SEIKO) ...	-------	-------	2	91066-415-006	0670810
22	OIL SEAL, 27X43X7	-------	-------	1	91261-ME9-005	1371194
23	OIL SEAL, 20X35X5	-------	-------	2	91266-ME5-003	1366517
24	NUT, HEX., 8MM	-------	-------	2	94001-08000-0S	0167338
25	WASHER, PLAIN, 8MM	-------	-------	2	94101-08000	0059097
26	WASHER, SPRING, 8MM	-------	-------	1	94111-10000	0059006
27	PIN, SPLIT, 2.0X18	-------	-------	2	94201-20180	0219279

© AMERICAN HONDA MOTOR CO., LTD. 1983

VT750C'83 ENGINE NO.; RC14E-2000051 TO 2022747
VT750C'83 FRAME NO.; RC140-DM000035 TO DM022807

VT750C'83

BLOCK NO. F-24

Ref. No.	DESCRIPTION	FRAME SERIAL NUMBER FROM	FRAME SERIAL NUMBER TO	QTY REQ	PART NUMBER	HONDA CODE
27	PIN, SPLIT, 2.0x20	-------	-------	2	94201-20200	0058354
	PIN, COTTER, 2.0x22	-------	-------	2	94201-20220	0058362
	PIN, SPLIT, 2.0x25	-------	-------	2	94201-20250	0058370
	PIN, COTTER, 2.0x32	-------	-------	2	94201-20320	0145607
	PIN, SPLIT, 2.0x35	-------	-------	2	94201-20350	0058388
	PIN, COTTER, 2.0x22	-------	-------	2	94201-29220	1484047
28	BOLT, FLANGE, 8X32	-------	-------	1	95700-08032-00	0637173
	BOLT, FLANGE, 8X32	-------	-------	1	95701-08032-00	2751725

© AMERICAN HONDA MOTOR CO., LTD. 1993

CONTENTS

TITLE	PAGE	GRID
AIR CLEANER	86	E8
ALTERNATOR	17	B8
BATTERY	84	E7
BRAKE CALIPER, FR.	66	D10
BRAKE PANEL, RR.	70	D12
BRAKE PEDAL	90	E10
CABLE	52	D3
CAM CHAIN	10	B5
CAMSHAFT	8	B4
CARBURETOR ASSY	41	C8
CARBURETOR COMPONENT	42	C9
CHANGE PEDAL	90	E10
CLUTCH	13	B6
CLUTCH MASTER CYLINDER	56	D5
CRANKCASE	26	C1
CRANKCASE COVER, L.	17	B8
CRANKCASE COVER, R.	11	B5
CRANKSHAFT	28	C2
CROSS SHAFT	38	C7
CYLINDER	4	B2
CYLINDER	6	B3
CYLINDER HEAD COVER	2	B1
CYLINDER HEAD, FR.	4	B2
CYLINDER HEAD, RR.	6	B3
FENDER, FR.	62	D8
FENDER, RR.	100	F3
FINAL DRIVEN GEAR	73	E1
FORK, FR.	63	D8
FR. BRAKE MASTER CYLINDER	54	D4
FRAME	110	F8
FUEL PUMP	84	E7
FUEL TANK	77	E3
GASKET KIT A	44	C10
GASKET KIT B	46	C11
GEARSHIFT DRUM	34	C5
HANDLEBAR	58	D6
HEADLIGHT	48	D1
HORN	60	D7
IGNITION COIL	106	F6
MUFFLER	88	E9
OIL FILTER	23	B11
OIL PUMP	23	B11
PISTON	28	C2
RADIATOR	108	F7
SEAT	80	E5
SHOCK ABSORBER	98	F2
SIDE COVER	82	E6
SPARK UNIT	100	F3
SPEEDOMETER	50	D2
STAND	94	E12
STARTING DRIVEN GEAR	16	B8
STARTING MOTOR	21	B10
STEERING STEM	60	D7
STEP	92	E11
SWINGARM	95	E12
SWITCH	52	D3
TACHOMETER	50	D2
TAILLIGHT	104	F5
TENSIONER	10	B5
THERMOSTAT	36	C6
TOOLS	112	F9
TOP BRIDGE	58	D6
TRANSMISSION	32	C4
TURN SIGNAL	102	F4
VALVE	8	B4
WATER PIPE	36	C6
WATER PUMP	19	B9
WHEEL, FR.	68	D11
WHEEL, RR.	72	E1
WIRE HARNESS	106	F6

GRID F1

SHOCK ABSORBER

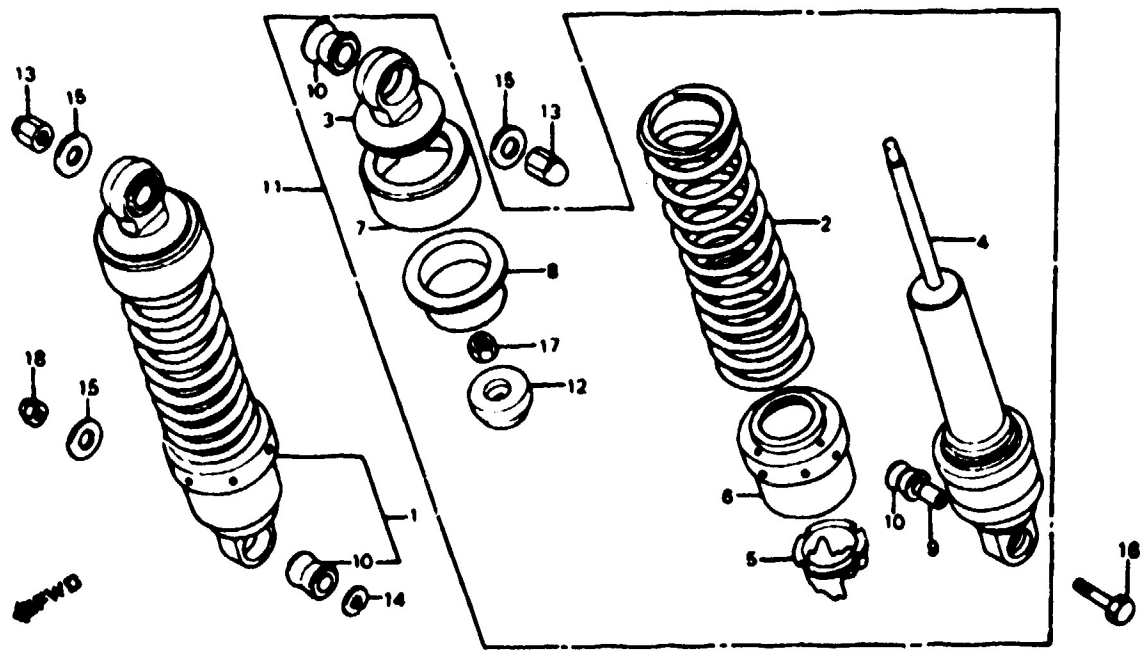

F14ME9025

VT750C'83

Ref. No.	DESCRIPTION (BLOCK NO. F-25)	FRAME SERIAL NUMBER FROM	FRAME SERIAL NUMBER TO	QTY REQ	PART NUMBER	HONDA CODE
1	SHOCK ABSORBER ASSY., R.	-------	-------	1	52400-ME9-671	1413673
2	SPRING, SHOCK ABSORBER	-------	-------	2	52401-ME9-003	1374453
3	JOINT COMP., UPPER	-------	-------	2	52403-ME9-003	1374461
4	DAMPER COMP., RR.	-------	-------	2	52410-ME9-003	1374479
5	ADJUSTER, SPRING	-------	-------	2	52422-ME9-003	1457563
6	SEAT, SPRING	-------	-------	2	52458-ME9-003	1455252
7	CASE, UPPER	-------	-------	2	52460-ME9-003	1374487
8	GUIDE, SPRING	-------	-------	2	52462-ME5-003	1366111
9	COLLAR, RR. SHOCK ABSORBER	-------	-------	1	52486-463-000	0884411
10	BUSH, UPPER RUBBER (SHOWA)	-------	-------	4	52489-461-771	1095751
11	SHOCK ABSORBER ASSY., L.	-------	-------	1	52500-ME9-671	1413681
12	RUBBER, STOPPER	-------	-------	2	52517-ME9-003	1510338
13	NUT, RR. SHOCK ABSORBER UPPER	-------	-------	2	90309-315-000	0241588
14	WASHER, PLAIN, 16MM	-------	-------	1	90439-463-000	0912840
15	WASHER, 10.3MM	-------	-------	3	90521-292-000	0144873
16	BOLT, HEX., 10X35	-------	-------	1	93200-10035-08	0912857

© AMERICAN HONDA MOTOR CO., LTD. 1983

VT750C'83 ENGINE NO.; RC14E-2000051 TO 2022747
VT750C'83 FRAME NO.; RC140-DM000035 TO DM022807

VT750C'83

BLOCK NO. F-25

Ref. No.	DESCRIPTION	FRAME SERIAL NUMBER FROM	FRAME SERIAL NUMBER TO	QTY REQ	PART NUMBER	HONDA CODE
17	NUT, HEX., 12MM	-------	-------	2	94002-12000-0S	0187500
18	NUT, CAP, 10MM	-------	-------	1	94021-10020-0S	0172155

© AMERICAN HONDA MOTOR CO. LTD 1993

CONTENTS

TITLE	PAGE	GRID
AIR CLEANER	86	E8
ALTERNATOR	17	B8
BATTERY	84	E7
BRAKE CALIPER, FR.	66	D10
BRAKE PANEL, RR.	70	D12
BRAKE PEDAL	90	E10
CABLE	52	D3
CAM CHAIN	10	B5
CAMSHAFT	8	B4
CARBURETOR ASSY	41	C8
CARBURETOR COMPONENT	42	C9
CHANGE PEDAL	90	E10
CLUTCH	13	B6
CLUTCH MASTER CYLINDER	56	D5
CRANKCASE	26	C1
CRANKCASE COVER, L.	17	B8
CRANKCASE COVER, R.	11	B5
CRANKSHAFT	28	C2
CROSS SHAFT	38	C7
CYLINDER	4	B2
CYLINDER	6	B3
CYLINDER HEAD COVER	2	B1
CYLINDER HEAD, FR.	4	B2
CYLINDER HEAD, RR.	6	B3
FENDER, FR.	62	D8
FENDER, RR.	100	F3
FINAL DRIVEN GEAR	73	E1
FORK, FR.	63	D8
FR. BRAKE MASTER CYLINDER	54	D4
FRAME	110	F8
FUEL PUMP	84	E7
FUEL TANK	77	E3
GASKET KIT A	44	C10
GASKET KIT B	46	C11
GEARSHIFT DRUM	34	C5
HANDLEBAR	58	D6
HEADLIGHT	48	D1
HORN	60	D7
IGNITION COIL	106	F6
MUFFLER	88	E9
OIL FILTER	23	B11
OIL PUMP	23	B11
PISTON	28	C2
RADIATOR	108	F7
SEAT	80	E5
SHOCK ABSORBER	98	F2
SIDE COVER	82	E6
SPARK UNIT	100	F3
SPEEDOMETER	50	D2
STAND	94	E12
STARTING DRIVEN GEAR	16	B6
STARTING MOTOR	21	B10
STEERING STEM	60	D7
STEP	92	E11
SWINGARM	95	E12
SWITCH	52	D3
TACHOMETER	50	D2
TAILLIGHT	104	F5
TENSIONER	10	B5
THERMOSTAT	36	C6
TOOLS	112	F9
TOP BRIDGE	58	D6
TRANSMISSION	32	C4
TURN SIGNAL	102	F4
VALVE	8	B4
WATER PIPE	36	C6
WATER PUMP	19	B9
WHEEL, FR.	68	D11
WHEEL, RR.	72	E1
WIRE HARNESS	106	F6

GRID **F2**

REAR FENDER • SPARK UNIT

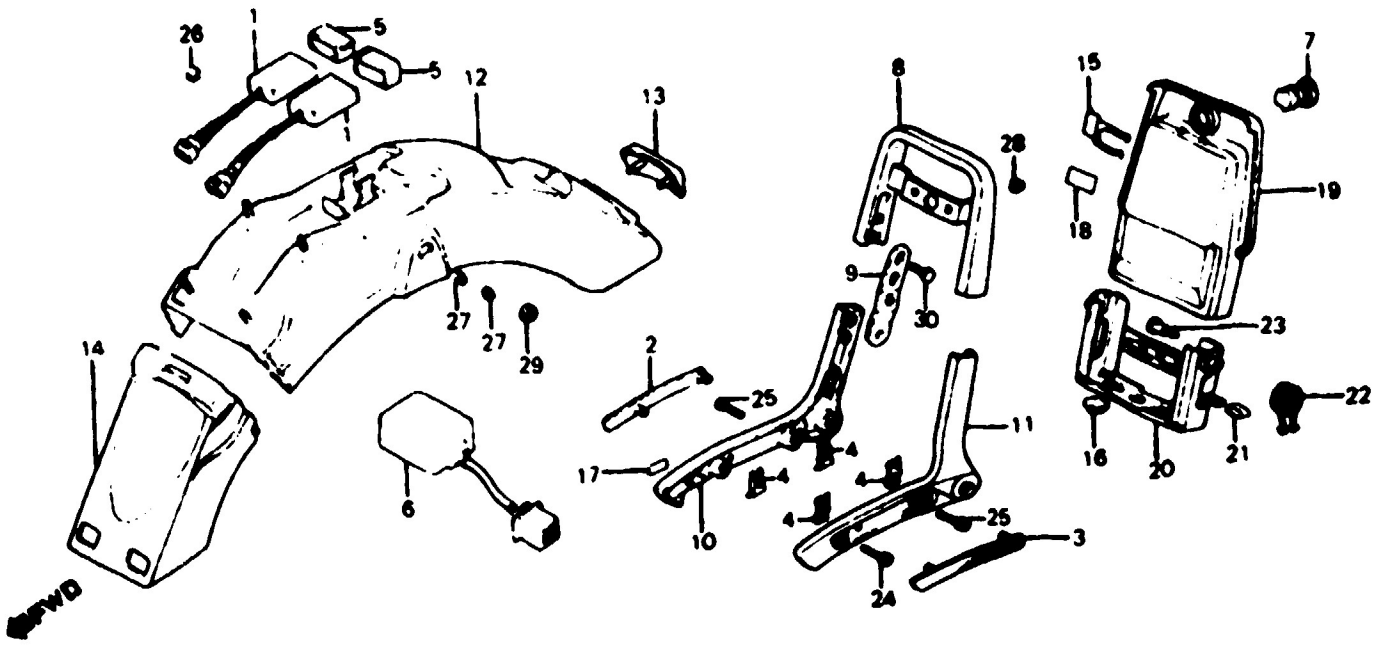

"CAUTION OR WARNING LABELS MUST BE ORDERED SEPARATELY WHEN APPLICABLE" F14ME9026

VT750C'83

Ref. No.	DESCRIPTION (BLOCK NO. F-26)	FRAME SERIAL NUMBER FROM	FRAME SERIAL NUMBER TO	QTY REQ	PART NUMBER	HONDA CODE
1	UNIT ASSY., SPARK	-------	-------	2	30400-ME9-005	1436120
2	REFLECTOR, R. RR. REFLEX	-------	-------	1	33742-ME9-671	1369198
	REFLECTOR, R. RR. REFLEX	-------	-------	1	33742-ME9-672	1808229
3	REFLECTOR, L. RR. REFLEX	-------	-------	1	33743-ME9-671	1369206
	REFLECTOR, L. RR. REFLEX	-------	-------	1	33743-ME9-672	1808237
4	SPRING, REFLEX REFLECTOR SETTING	-------	-------	4	33745-ME9-000	1374511
5	CUSHION	-------	-------	2	35229-ME9-000	1369263
6	SENSOR, STOP & TAIL	-------	-------	1	35550-ME9-670	1369289
7	LOCK, FILLER LID	-------	-------	1	37220-439-007	0912691
8	RAIL, UPPER GRAB	-------	-------	1	77320-ME9-670	1374529
	RAIL, UPPER GRAB	-------	-------	1	77320-ME9-671	1758614
9	STAY, GRAB RAIL SETTING	-------	-------	2	77324-ME9-000	1436245
	STAY, GRAB RAIL SET	-------	-------	2	77324-MG8-770	2153641
10	RAIL, R. GRAB	-------	-------	1	77330-ME9-000	1370659
	RAIL, R. GRAB	-------	-------	1	77330-ME9-010	1758622
11	RAIL, L. GRAB	-------	-------	1	77340-ME9-000	1370667

© AMERICAN HONDA MOTOR CO. LTD 1983

VT750C'83 ENGINE NO.; RC14E-2000051 TO 2022747
VT750C'83 FRAME NO.; RC140-DM000035 TO DM022807

VT750C'83

BLOCK NO. F-26

Ref. No.	DESCRIPTION	FRAME SERIAL NUMBER FROM	FRAME SERIAL NUMBER TO	QTY REQ	PART NUMBER	HONDA CODE
11	RAIL, L. GRAB	-------	-------	1	77340-ME9-010	1758648
12	FENDER A, RR. *R114CU* (CANDY WINEBERRY RED-U)	-------	-------	1	80100-ME9-000ZA	1370675
	FENDER A, RR. *NH1Z* (BLACK-Z)	-------	-------	1	80100-ME9-000ZB	1370683
13	EMBLEM, RR. FENDER	-------	-------	1	80102-MB1-770	1441971
14	FENDER B, RR. *R114CU* (CANDY WINEBERRY RED-U)	-------	-------	1	80105-ME9-000ZA	1370691
	FENDER B, RR. *NH1Z* (BLACK-Z)	-------	-------	1	80105-ME9-000ZB	1370709
15	SPRING, LOCK KEY SETTING	-------	-------	1	81192-MA1-740	1088541
16	RUBBER, BATTERY BOX	-------	-------	1	83618-323-000	0255810
17	LABEL, HELMET HOLDER	-------	-------	1	87511-323-670	0274811
18	MARK, ACCESSORIES & LOADING CAUTION	-------	-------	1	87512-461-770	0954354
19	CASE, TOOL	-------	-------	1	89001-ME9-670	1374537
20	HOLDER, TOOL CASE	-------	-------	1	89002-ME9-670	1374545
	HOLDER, TOOL CASE	-------	-------	1	89002-ME9-770	1536457
21	RUBBER, TOOL CASE STOPPER	-------	-------	1	89006-ME9-670	1374552
22	SPRING, LICENCE PLATE RETURN	-------	-------	1	89007-ME9-670	1374560
23	BOLT, TOOL CASE HOLDER SETTING	-------	-------	1	90107-ME9-670	1374578
24	BOLT, SOCKET, 8MM	-------	-------	1	90116-125-782	0857128
25	BOLT, SOCKET, 8X28	-------	-------	2	90152-ME5-000	1330927
26	NUT, CAP, 6MM	-------	-------	2	90201-415-000	0670729
	NUT, FLANGE, 6MM	-------	-------	2	94050-06000	0471623
27	NUT, SPEED, 3MM	-------	-------	2	90313-567-000	0258863
28	NUT, FLANGE, 6MM	-------	-------	3	94050-06080	0612689
29	NUT, FLANGE, 8MM	-------	-------	2	94050-08080	0468447
30	BOLT, FLANGE, 6X12	-------	-------	6	95700-06012-07	0481176
	BOLT, FLANGE, 6X12	-------	-------	6	95701-06012-07	2387108

© AMERICAN HONDA MOTOR CO., LTD. 1983

CONTENTS

TITLE	PAGE	GRID
AIR CLEANER	86	E8
ALTERNATOR	17	B8
BATTERY	84	E7
BRAKE CALIPER, FR.	66	D10
BRAKE PANEL, RR.	70	D12
BRAKE PEDAL	90	E10
CABLE	52	D3
CAM CHAIN	10	B5
CAMSHAFT	8	B4
CARBURETOR ASSY	41	C8
CARBURETOR COMPONENT	42	C9
CHANGE PEDAL	90	E10
CLUTCH	13	B6
CLUTCH MASTER CYLINDER	56	D5
CRANKCASE	26	C1
CRANKCASE COVER, L.	17	B8
CRANKCASE COVER, R.	11	B6
CRANKSHAFT	28	C2
CROSS SHAFT	38	C7
CYLINDER	4	B2
CYLINDER	6	B3
CYLINDER HEAD COVER	2	B1
CYLINDER HEAD, FR.	4	B2
CYLINDER HEAD, RR.	6	B3
FENDER, FR.	62	D8
FENDER, RR.	100	F3
FINAL DRIVEN GEAR	73	E1
FORK, FR.	63	D8
FR. BRAKE MASTER CYLINDER	54	D4
FRAME	110	F8
FUEL PUMP	84	E7
FUEL TANK	77	E3
GASKET KIT A	44	C10
GASKET KIT B	46	C11
GEARSHIFT DRUM	34	C5
HANDLEBAR	58	D6
HEADLIGHT	48	D1
HORN	60	D7
IGNITION COIL	106	F6
MUFFLER	88	E9
OIL FILTER	23	B11
OIL PUMP	23	B11
PISTON	28	C2
RADIATOR	108	F7
SEAT	80	E5
SHOCK ABSORBER	98	F2
SIDE COVER	82	E6
SPARK UNIT	100	F3
SPEEDOMETER	50	D2
STAND	94	E12
STARTING DRIVEN GEAR	16	B8
STARTING MOTOR	21	B10
STEERING STEM	60	D7
STEP	92	E11
SWINGARM	95	E12
SWITCH	52	D3
TACHOMETER	50	D2
TAILLIGHT	104	F5
TENSIONER	10	B5
THERMOSTAT	36	C6
TOOLS	112	F9
TOP BRIDGE	58	D6
TRANSMISSION	32	C4
TURN SIGNAL	102	F4
VALVE	8	B4
WATER PIPE	36	C6
WATER PUMP	19	B9
WHEEL, FR.	68	D11
WHEEL, RR.	72	E1
WIRE HARNESS	106	F6

GRID F3

TURN SIGNAL

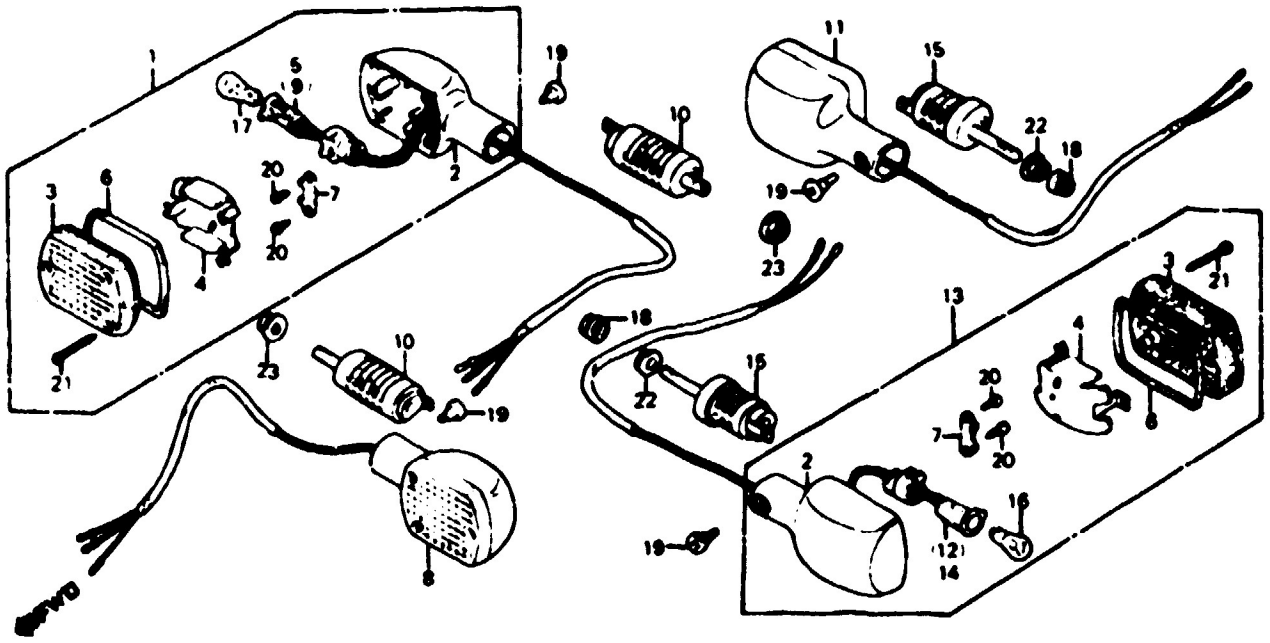

F14ME9027

VT750C'83

Ref. No.	DESCRIPTION (BLOCK NO. F-27)	FRAME SERIAL NUMBER FROM	FRAME SERIAL NUMBER TO	QTY REQ	PART NUMBER	HONDA CODE
1	TURN SIGNAL ASSY., R. FR.	-------	-------	1	33400-ME9-671	1434406
	TURN SIGNAL ASSY.	-------	-------	1	33400-MF5-405	3988987
	TURN SIGNAL ASSY., R. FR.	-------	-------	1	33400-MF5-770	1548106
	TURN SIGNAL ASSY., R. FR.	-------	-------	1	33400-MG8-670	2045664
	TURN SIGNAL ASSY., L. FR.	-------	-------	1	33450-MG8-670	2045698
2	BASE, TURN SIGNAL	-------	-------	4	33401-MB1-003	1260389
3	LENS, TURN SIGNAL	-------	-------	4	33402-MB1-003	1260397
4	REFLECTOR, TURN SIGNAL	-------	-------	4	33403-MB1-671	1260405
5	WIRE COMP., R. TURN SIGNAL	-------	-------	1	33405-ME9-671	1434117
	WIRE COMP., R. TURN SIGNAL	-------	-------	1	33405-MF5-770	1548114
	CORD COMP., R. TURN SIGNAL	-------	-------	1	33405-MM2-405	4082087
6	GASKET, LENS	-------	-------	4	33407-MB1-003	1260421
7	HOLDER	-------	-------	4	33408-MB1-003	1260439
8	TURN SIGNAL ASSY.	-------	-------	1	33400-MF5-405	3988987
	TURN SIGNAL ASSY., R. FR.	-------	-------	1	33400-MF5-840	2269520
	TURN SIGNAL ASSY., L. FR.	-------	-------	1	33450-ME9-671	1439306

© AMERICAN HONDA MOTOR CO. LTD. 1993

VT750C'83 ENGINE NO.; RC14E-2000051 TO 2022747
VT750C'83 FRAME NO.; RC140-DM000035 TO DM022807

VT750C '83

BLOCK NO. F-27

Ref. No.	DESCRIPTION	FRAME SERIAL NUMBER FROM	FRAME SERIAL NUMBER TO	QTY REQ	PART NUMBER	HONDA CODE
8	TURN SIGNAL ASSY., L. FR.	-------	-------	1	33450-MF5-770	1548122
9	WIRE COMP., L. TURN SIGNAL	-------	-------	1	33455-ME9-671	1434422
	WIRE COMP., L. TURN SIGNAL	-------	-------	1	33455-MF5-770	1548130
10	STAY, FR. TURN SIGNAL	-------	-------	2	33490-MB1-003	1246479
11	TURN SIGNAL ASSY., R. RR. (12V 23W)	-------	-------	1	33600-ME5-671	1391721
	TURN SIGNAL, R. RR.	-------	-------	1	33600-ME9-671	1434497
	TURN SIGNAL ASSY., R. RR.	-------	-------	1	33600-MK3-405	4026969
12	WIRE COMP., R. RR. TURN SIGNAL	-------	-------	1	33605-ME5-003	1391739
	WIRE COMP., R. RR. TURN SIGNAL	-------	-------	1	33605-ME9-003	1399286
13	TURN SIGNAL ASSY.	-------	-------	1	33600-MG8-405	4031688
	TURN SIGNAL ASSY., L. RR.	-------	-------	1	33650-ME9-671	1434505
	TURN SIGNAL ASSY., L. RR.	-------	-------	1	33650-ME9-770	1591841
14	WIRE COMP., L. TURN SIGNAL	-------	-------	1	33655-ME9-003	1399294
	WIRE COMP., L. TURN SIGNAL	-------	-------	1	33655-ME9-770	1562255
	WIRE COMP., L. TURN SIGNAL	-------	-------	1	33655-MJ1-000	1734508
15	STAY, RR. TURN SIGNAL	-------	-------	2	33690-MB1-003	1246552
16	BULB, TURN SIGNAL (12V 23W)	-------	-------	2	34905-268-671	0145318
17	BULB, TURN SIGNAL (12V23/8W) (STANLEY)	-------	-------	2	34905-425-671	0824326
18	CAP, FR. ENGINE HANGER	-------	-------	2	50311-MA1-730	1087535
19	BOLT, SPECIAL, 6X8	-------	-------	4	90380-ME9-000	1413830
20	SCREW, TAPPING, 4X12	-------	-------	8	93901-34320	0791277
21	SCREW, TAPPING, 4X25	-------	-------	12	93901-34610	0724369
22	NUT, FLANGE, 10MM	-------	-------	2	94050-10080	0623405
23	NUT, FLANGE, 12MM	-------	-------	2	94050-12080	0928127

© AMERICAN HONDA MOTOR CO., LTD. 1983

CONTENTS

TITLE	PAGE	GRID
AIR CLEANER	86	E8
ALTERNATOR	17	B8
BATTERY	84	E7
BRAKE CALIPER, FR.	66	D10
BRAKE PANEL, RR.	70	D12
BRAKE PEDAL	30	E10
CABLE	52	D3
CAM CHAIN	10	B5
CAMSHAFT	8	B4
CARBURETOR ASSY.	41	C8
CARBURETOR COMPONENT	42	C9
CHANGE PEDAL	90	E10
CLUTCH	13	B6
CLUTCH MASTER CYLINDER	56	D5
CRANKCASE	26	C1
CRANKCASE COVER, L.	17	B8
CRANKCASE COVER, R.	11	B5
CRANKSHAFT	28	C2
CROSS SHAFT	38	C7
CYLINDER	4	B2
CYLINDER	6	B3
CYLINDER HEAD COVER	2	B1
CYLINDER HEAD, FR.	4	B2
CYLINDER HEAD, RR.	6	B3
FENDER, FR.	62	D8
FENDER, RR.	100	F3
FINAL DRIVEN GEAR	73	E1
FORK, FR.	63	D8
FR. BRAKE MASTER CYLINDER	54	D4
FRAME	110	F8
FUEL PUMP	84	E7
FUEL TANK	77	E3
GASKET KIT A	44	C10
GASKET KIT B	46	C11
GEARSHIFT DRUM	34	C5
HANDLEBAR	58	D6
HEADLIGHT	48	D1
HORN	60	D7
IGNITION COIL	106	F6
MUFFLER	88	E9
OIL FILTER	23	B11
OIL PUMP	23	B11
PISTON	28	C2
RADIATOR	108	F7
SEAT	80	E5
SHOCK ABSORBER	98	F2
SIDE COVER	82	E6
SPARK UNIT	100	F3
SPEEDOMETER	50	D2
STAND	94	E12
STARTING DRIVEN GEAR	16	B8
STARTING MOTOR	21	B10
STEERING STEM	60	D7
STEP	92	E11
SWINGARM	95	E12
SWITCH	52	D3
TACHOMETER	50	D2
TAILLIGHT	104	F5
TENSIONER	10	B5
THERMOSTAT	36	C8
TOOLS	112	F9
TOP BRIDGE	58	D6
TRANSMISSION	32	C4
TURN SIGNAL	102	F4
VALVE	8	B4
WATER PIPE	36	C8
WATER PUMP	19	B9
WHEEL, FR.	68	D11
WHEEL, RR.	72	E1
WIRE HARNESS	106	F6

GRID **F4**

TAILLIGHT

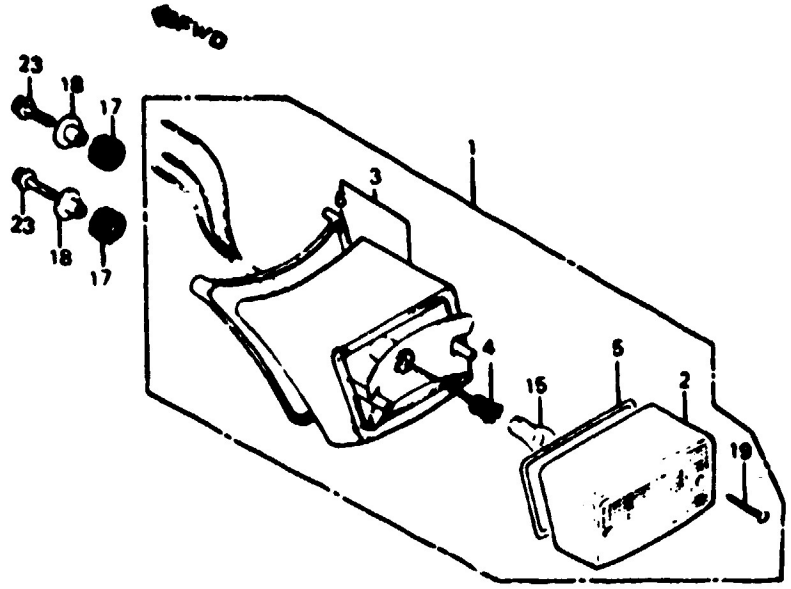

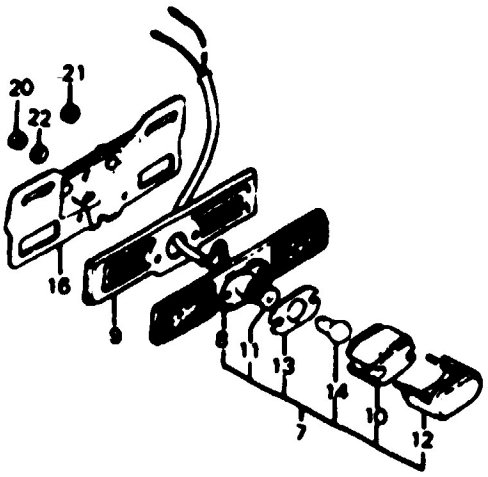

F14ME9028

VT750C'83

Ref. No.	DESCRIPTION	FRAME SERIAL NUMBER FROM	FRAME SERIAL NUMBER TO	QTY REQ	PART NUMBER	HONDA CODE
	BLOCK NO. F-28					
1	TAILLIGHT UNIT	-------	-------	1	33701-ME9-671	1510346
	TAILLIGHT UNIT	-------	-------	1	33701-ME9-770	1562263
2	LENS COMP., TAILLIGHT	-------	-------	1	33702-MB1-671	1246586
	LENS COMP., TAILLIGHT	-------	-------	1	33702-MB1-672	2298966
3	BASE COMP., TAILLIGHT	-------	-------	1	33703-MB1-671	1246594
4	WIRE COMP., TAILLIGHT	-------	-------	1	33708-ME9-003	1436138
	WIRE COMP., TAILLIGHT	-------	-------	1	33708-ME9-770	1562271
5	GASKET, TAILLIGHT	-------	-------	1	33709-MB1-003	1246610
6	GASKET, TAILLIGHT BASE	-------	-------	1	33718-MB1-003	1260504
7	LIGHT ASSY., LICENSE	-------	-------	1	33720-ME9-671	1510353
	LIGHT ASSY., LICENSE	-------	-------	1	33720-ME9-770	1562289
8	BASE COMP.	-------	-------	1	33721-MB1-671	1260520
9	GASKET, LICENSE LIGHT	-------	-------	1	33721-ME9-000	1369164
10	LENS, LICENSE	-------	-------	1	33722-MB1-003	1260538
	LENS, LICENSE	-------	-------	1	33722-MB1-013	2291920
11	WIRE COMP., LICENSE	-------	-------	1	33725-ME9-671	1410141

© AMERICAN HONDA MOTOR CO. LTD 1983

VT750C'83 ENGINE NO.; RC14E-2000051 TO 2022747
VT750C'83 FRAME NO.; RC140-DM000035 TO DM022807

VT750C'83

BLOCK NO. F-28

Ref. No.	DESCRIPTION	FRAME SERIAL NUMBER FROM	FRAME SERIAL NUMBER TO	QTY REQ	PART NUMBER	HONDA CODE
11	WIRE COMP., LICENSE	-------	-------	1	33725-ME9-770	1562297
12	COVER COMP., LICENSE	-------	-------	1	33727-ME9-003	1436146
13	GASKET, LENS	-------	-------	1	33729-MB1-003	1260561
14	BULB, LICENSE LIGHT (12V8W)	-------	-------	1	34616-568-671	0504522
	BULB, LICENSE LIGHT (12V4CP)	-------	-------	1	34902-500-003	0591529
	BULB, LICENSE LIGHT (12V4CP)	-------	-------	1	34908-272-000	2079226
	BULB (12V8W 67)	-------	-------	1	34909-505-003	0504563
	BULB, LICENSE LIGHT (12V4CP)	-------	-------	1	34909-505-610	0587147
15	BULB, TAILLIGHT (STANLEY) (12V 27/8W)	-------	-------	1	34906-425-771	0924134
16	BRACKET, NUMBER PLATE	-------	-------	1	84701-ME9-670	1370782
17	RUBBER, TAILLIGHT MOUNTING	-------	-------	2	84703-425-000	0719229
18	COLLAR, 6.2X12	-------	-------	2	90501-425-000	0719427
19	SCREW, TAPPING, 4X30	-------	-------	2	93901-34710	0695767
20	NUT, HEX., 4MM	-------	-------	2	94001-04000-0S	0209684
21	NUT, HEX., 6MM	-------	-------	2	94002-06000-0S	0181032
22	WASHER, PLAIN, 4MM	-------	-------	2	94103-04000	1510361
23	BOLT, FLANGE, 6X20	-------	-------	2	95700-06020-08	0340331
	BOLT, FLANGE, 6X20	-------	-------	2	95701-06020-08	2374759

© AMERICAN HONDA MOTOR CO. LTD. 1983

CONTENTS

TITLE	PAGE	GRID
AIR CLEANER	86	E8
ALTERNATOR	17	B8
BATTERY	84	E7
BRAKE CALIPER, FR.	66	D10
BRAKE PANEL, RR.	70	D12
BRAKE PEDAL	90	E10
CABLE	52	D3
CAM CHAIN	10	B5
CAMSHAFT	8	B4
CARBURETOR ASSY.	41	C8
CARBURETOR COMPONENT	42	C9
CHANGE PEDAL	90	E10
CLUTCH	13	B6
CLUTCH MASTER CYLINDER	56	D5
CRANKCASE	26	C1
CRANKCASE COVER, L.	17	B8
CRANKCASE COVER, R.	11	B5
CRANKSHAFT	28	C2
CROSS SHAFT	38	C7
CYLINDER	4	B2
CYLINDER	6	B3
CYLINDER HEAD COVER	2	B1
CYLINDER HEAD, FR.	4	B2
CYLINDER HEAD, RR.	6	B3
FENDER, FR.	62	D8
FENDER, RR.	100	F3
FINAL DRIVEN GEAR	73	E1
FORK, FR.	63	D8
FR. BRAKE MASTER CYLINDER	54	D4
FRAME	110	F8
FUEL PUMP	84	E7
FUEL TANK	77	E3
GASKET KIT A	44	C10
GASKET KIT B	46	C11
GEARSHIFT DRUM	34	C5
HANDLEBAR	58	D6
HEADLIGHT	48	D1
HORN	60	D7
IGNITION COIL	106	F6
MUFFLER	88	E9
OIL FILTER	23	B11
OIL PUMP	23	B11
PISTON	28	C2
RADIATOR	108	F7
SEAT	80	E5
SHOCK ABSORBER	98	F2
SIDE COVER	82	E6
SPARK UNIT	100	F3
SPEEDOMETER	50	D2
STAND	94	E12
STARTING DRIVEN GEAR	16	B8
STARTING MOTOR	21	B10
STEERING STEM	60	D7
STEP	92	E11
SWINGARM	95	E12
SWITCH	52	D3
TACHOMETER	50	D2
TAILLIGHT	104	F5
TENSIONER	10	B5
THERMOSTAT	36	C6
TOOLS	112	F9
TOP BRIDGE	58	D6
TRANSMISSION	32	C4
TURN SIGNAL	102	F4
VALVE	8	B4
WATER PIPE	36	C6
WATER PUMP	19	B9
WHEEL, FR.	68	D11
WHEEL, RR.	72	E1
WIRE HARNESS	108	F6

GRID **F5**

WIRE HARNESS • IGNITION COIL

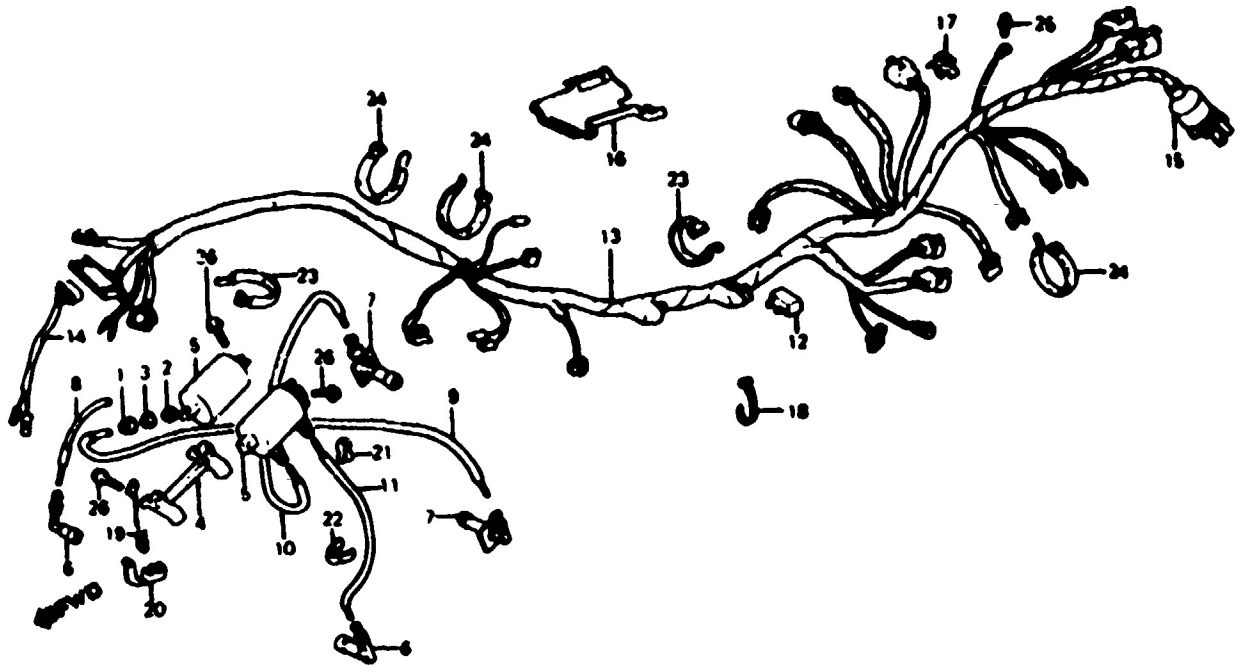

F14ME029

Ref. No.	DESCRIPTION (BLOCK NO. F-29)	FRAME SERIAL NUMBER FROM	FRAME SERIAL NUMBER TO	QTY REQ	PART NUMBER	HONDA CODE
	VT750C'83					
1	CAP, SCREW	-------	-------	4	30501-428-003	1094911
2	SEAL, RUBBER	-------	-------	4	30502-428-003	1094929
3	WASHER, CAP	-------	-------	4	30503-428-003	1094937
4	BRACKET, IGNITION COIL	-------	-------	1	30505-ME9-003	1368802
5	COIL COMP., IGNITION	-------	-------	2	30510-ME9-003	1368810
	COIL COMP., IGNITION	-------	-------	2	30510-ME9-013	2269397
6	CAP ASSY. 1, NOISE SUPPRESSOR	-------	-------	2	30700-ME9-000	1368828
	CAP ASSY. 1, NOISE SUPPRESSOR	-------	-------	2	30700-MF5-153	1434315
7	CAP ASSY. 2, NOISE SUPPRESSOR	-------	-------	2	30701-ME9-000	1368836
	CAP, SPARK PLUG	-------	-------	2	30701-MG7-000	4129631
8	WIRE 1, HIGH TENSION	-------	-------	1	30751-ME9-000	1368844
9	WIRE 2, HIGH TENSION	-------	-------	1	30752-ME9-000	1368851
10	WIRE 3, HIGH TENSION	-------	-------	1	30753-ME9-000	1368869
11	WIRE 4, HIGH TENSION	-------	-------	1	30754-ME9-000	1368877
12	RECTIFIER ASSY., SILICON (STANLEY)	-------	-------	1	31700-124-003	0351346

© AMERICAN HONDA MOTOR CO., LTD. 1983

VT750C'83 ENGINE NO.; RC14E-2000051 TO 2022747
VT750C'83 FRAME NO.; RC140-DM000035 TO DM022807

VT750C'83

Ref. No.	BLOCK NO. F-29 DESCRIPTION	FRAME SERIAL NUMBER FROM	TO	QTY REQ	PART NUMBER	HONDA CODE
12	RECTIFIER ASSY., SILICON (SHINDENGEN)	-------	-------	1	31700-124-008	0692129
13	HARNESS, WIRE	-------	-------	1	32100-ME9-000	1368950
14	HARNESS D, SUB WIRE	-------	-------	1	32104-ME9-000	1368976
15	COVER, WIRE HARNESS CONNECTOR	-------	-------	1	32108-046-000	0268169
16	GUARD, WIRE HARNESS	-------	-------	1	32110-ME9-000	1413483
17	CLIP, WIRE HARNESS	-------	-------	1	32161-393-003	0445494
18	BAND B1, WIRE	-------	-------	1	32161-404-610	0637728
19	CLIP, HIGH TENSION CORD	-------	-------	1	32800-ME9-000	1413517
20	CLIP, HIGH TENSION WIRE (B)	-------	-------	1	32801-ME9-000	1413525
21	CLIP, HIGH TENSION CORD (C)	-------	-------	1	32802-ME9-000	1413533
22	CLAMP, SPEEDOMETER SENSOR CORD	-------	-------	1	61108-MB0-000	1249986
23	BAND A1, WIRE	-------	-------	2	95014-61100	0255661
24	BAND A2, WIRE	-------	-------	3	95014-61200	0255679
25	BOLT, FLANGE, 6X10	-------	-------	1	95700-06010-08	0344952
	BOLT, FLANGE, 6X10	-------	-------	1	95701-06010-08	2204709
26	BOLT, FLANGE, 6X25	-------	-------	6	95700-06025-08	0258731
	BOLT, FLANGE, 6X25	-------	-------	6	95701-06025-08	2259711

© AMERICAN HONDA MOTOR CO., LTD. 1983

CONTENTS

TITLE	PAGE	GRID
AIR CLEANER	86	E8
ALTERNATOR	17	B8
BATTERY	84	E7
BRAKE CALIPER, FR.	66	D10
BRAKE PANEL, RR.	70	D12
BRAKE PEDAL	90	E10
CABLE	52	D3
CAM CHAIN	10	B5
CAMSHAFT	8	B4
CARBURETOR ASSY.	41	C8
CARBURETOR COMPONENT	42	C9
CHANGE PEDAL	90	E10
CLUTCH	13	B6
CLUTCH MASTER CYLINDER	56	D5
CRANKCASE	26	C1
CRANKCASE COVER, L.	17	B6
CRANKCASE COVER, R.	11	B5
CRANKSHAFT	28	C2
CROSS SHAFT	38	C7
CYLINDER	4	B2
CYLINDER	6	B3
CYLINDER HEAD COVER	2	B1
CYLINDER HEAD, FR.	4	B2
CYLINDER HEAD, RR.	6	B3
FENDER, FR.	62	D8
FENDER, RR.	100	F3
FINAL DRIVEN GEAR	73	E1
FORK, FR.	63	D8
FR. BRAKE MASTER CYLINDER	54	D4
FRAME	[illegible]	F8
FUEL PUMP	[illegible]4	E7
FUEL TANK	[illegible]7	E3
GASKET KIT A	44	C10
GASKET KIT B	46	C11
GEARSHIFT DRUM	34	C5
HANDLEBAR	58	D6
HEADLIGHT	48	D1
HORN	60	D7
IGNITION COIL	106	F6
MUFFLER	88	E9
OIL FILTER	23	B11
OIL PUMP	23	B11
PISTON	28	C2
RADIATOR	108	F7
SEAT	80	E5
SHOCK ABSORBER	96	F2
SIDE COVER	82	E6
SPARK UNIT	100	F3
SPEEDOMETER	50	D2
STAND	94	E12
STARTING DRIVEN GEAR	16	B8
STARTING MOTOR	21	B10
STEERING STEM	60	D7
STEP	92	E11
SWINGARM	95	E12
SWITCH	52	D3
TACHOMETER	50	D2
TAILLIGHT	104	F5
TENSIONER	10	B5
THERMOSTAT	36	C6
TOOLS	112	F8
TOP BRIDGE	58	D6
TRANSMISSION	32	C4
TURN SIGNAL	102	F4
VALVE	8	B4
WATER PIPE	36	C6
WATER PUMP	19	B9
WHEEL, FR.	68	D11
WHEEL, RR.	72	E1
WIRE HARNESS	106	F6

GRID F6

RADIATOR

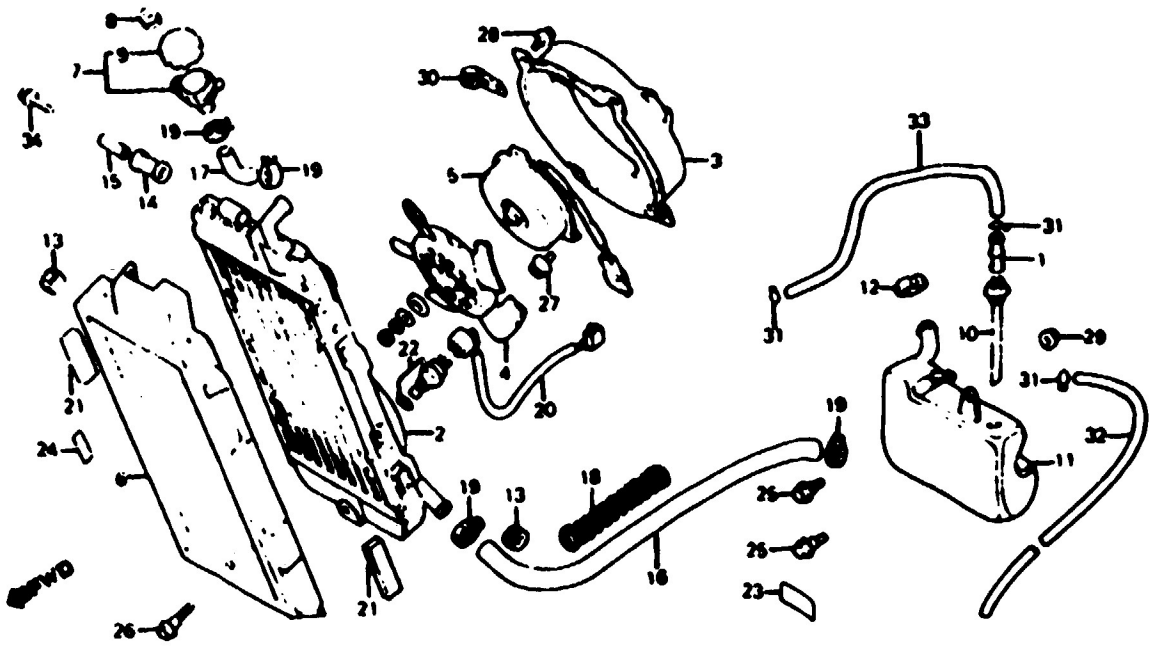

"CAUTION OR WARNING LABELS MUST BE ORDERED SEPARATELY WHEN APPLICABLE" F14ME8030

VT750C'83

BLOCK NO. F-30

Ref. No.	DESCRIPTION	FRAME SERIAL NUMBER FROM	FRAME SERIAL NUMBER TO	QTY REQ	PART NUMBER	HONDA CODE
1	JOINT, BREATHER TUBE	-------	-------	1	17359-419-670	0631325
2	RADIATOR COMP.	-------	-------	1	19010-ME9-003	1368026
3	SHROUD COMP.	-------	-------	1	19015-ME9-003	1368034
4	FAN COMP., COOLING	-------	-------	1	19020-ME9-003	1368042
5	MOTOR, FAN	-------	-------	1	19030-ME9-004	1392141
6	COVER, RADIATOR	-------	-------	1	19032-ME9-000	1368067
	COVER, RADIATOR	-------	-------	1	19032-ME9-770	1536028
7	NECK ASSY., FILLER	-------	-------	1	19035-ME9-003	1368075
8	RUBBER, FILLER NECK STOPPER	-------	-------	1	19038-ME9-000	1368083
9	CAP COMP., RADIATOR (TOYO)	-------	-------	1	19045-MB0-702	1303684
10	TUBE, LEVEL	-------	-------	1	19102-463-000	0881896
	TUBE, LEVEL	-------	-------	1	19205-MF5-000	1400175
11	TANK, RESERVE	-------	-------	1	19103-ME9-000	1368091
12	CAP, RESERVE TANK	-------	-------	1	19104-ME9-000	1368109
13	CUSHION, RADIATOR	-------	-------	2	19112-ME9-000	1374677
14	RUBBER, RADIATOR MOUNTING	-------	-------	1	19113-MB0-000	1245539

© AMERICAN HONDA MOTOR CO. LTD. 1983

VT750C'83 ENGINE NO.; RC14E-2000051 TO 2022747
VT750C'83 FRAME NO.; RC140-DM000035 TO DM022807

VT750C'83

Ref. No.	BLOCK NO. F-30 DESCRIPTION	FRAME SERIAL NUMBER FROM	TO	QTY REQ	PART NUMBER	HONDA CODE
15	COLLAR, RADIATOR MOUNTING	-------	-------	1	19114-MB0-000	1245547
16	HOSE, RADIATOR LOWER	-------	-------	1	19117-ME9-000	1368125
17	HOSE, FILLER NECK	-------	-------	1	19118-ME9-000	1368133
18	GUARD, RADIATOR LOWER HOSE	-------	-------	1	19120-ME9-000	1368141
	GUARD, RADIATOR LOWER HOSE	-------	-------	1	19120-ME9-010	2651545
19	CLAMP, WATER HOSE	-------	-------	4	19506-KA4-000	1039635
20	HARNESS E, SUB WIRE	-------	-------	1	32105-ME9-000	1368984
21	REFLECTOR, FR. REFLEX	-------	-------	2	33741-ME9-671	1369180
	REFLECTOR, FR. REFLEX	-------	-------	2	33741-ME9-672	1852649
	REFLECTOR, FR. REFLEX	-------	-------	2	33741-ME9-673	3780640
22	THERMOSWITCH ASSY.	-------	-------	1	37760-MC7-003	1215458
23	LABEL, RESERVE TANK	-------	-------	1	87507-ME9-670	1374693
24	MARK, RADIATOR CAUTION	-------	-------	1	87508-415-670	0670471
25	BOLT, FLANGE, 6MM	-------	-------	2	90111-162-000	0811141
26	BOLT, FLANGE, 6MM	-------	-------	1	90116-ME9-000	1371038
27	BOLT-WASHER, 6X12	-------	-------	3	93483-06012-07	1521509
28	BOLT-WASHER, 6X10	-------	-------	4	93493-06010-07	1510387
29	NUT, FLANGE, 6MM	-------	-------	2	94050-06080	0612689
30	CLIP, WIRE, 2X78	-------	-------	1	94591-27000	0636969
31	CLIP, TUBE, C11	-------	-------	3	95002-70000	0053595
32	TUBE, 7X400 (BULK HOSE: 95005-70003-30M)	-------	-------	1	95005-70400-30	1374701
33	TUBE, 7X800 (BULK HOSE: 95005-70003-30M)	-------	-------	1	95005-70800-30	1374719
34	BOLT, FLANGE, 6X40	-------	-------	1	95700-06040-00	0483966
	BOLT, FLANGE, 6X40	-------	-------	1	95701-06040-00	2410942

© AMERICAN HONDA MOTOR CO., LTD. 1983

CONTENTS

TITLE	PAGE	GRID
AIR CLEANER	86	E8
ALTERNATOR	17	B8
BATTERY	84	E7
BRAKE CALIPER, FR.	66	D10
BRAKE PANEL, RR.	70	D12
BRAKE PEDAL	90	E10
CABLE	52	D3
CAM CHAIN	10	B5
CAMSHAFT	8	B4
CARBURETOR ASSY.	41	C8
CARBURETOR COMPONENT	42	C9
CHANGE PEDAL	90	E10
CLUTCH	13	B6
CLUTCH MASTER CYLINDER	56	D5
CRANKCASE	26	C1
CRANKCASE COVER, L.	17	B8
CRANKCASE COVER, R.	11	B5
CRANKSHAFT	28	C2
CROSS SHAFT	38	C7
CYLINDER	4	B2
CYLINDER	6	B3
CYLINDER HEAD COVER	2	B1
CYLINDER HEAD, FR.	4	B2
CYLINDER HEAD, RR.	6	B3
FENDER, FR.	62	D9
FENDER, RR.	100	F3
FINAL DRIVEN GEAR	73	E1
FORK, FR.	63	D9
FR. BRAKE MASTER CYLINDER	54	D4
FRAME	110	F8
FUEL PUMP	84	E7
FUEL TANK	77	E3
GASKET KIT A	44	C10
GASKET KIT B	46	C11
GEARSHIFT DRUM	34	C5
HANDLEBAR	58	D6
HEADLIGHT	48	D1
HORN	60	D7
IGNITION COIL	106	F6
MUFFLER	88	E9
OIL FILTER	23	B11
OIL PUMP	23	B11
PISTON	28	C2
RADIATOR	108	F7
SEAT	80	E5
SHOCK ABSORBER	98	F2
SIDE COVER	82	E6
SPARK UNIT	100	F3
SPEEDOMETER	50	D2
STAND	94	E12
STARTING DRIVEN GEAR	16	B8
STARTING MOTOR	21	B10
STEERING STEM	60	D7
STEP	92	E11
SWINGARM	95	E12
SWITCH	52	D3
TACHOMETER	50	D2
TAILLIGHT	104	F5
TENSIONER	10	B5
THERMOSTAT	36	C8
TOOLS	112	F9
TOP BRIDGE	58	D6
TRANSMISSION	32	C4
TURN SIGNAL	102	F4
VALVE	8	B4
WATER PIPE	36	C8
WATER PUMP	19	B9
WHEEL, FR.	68	D11
WHEEL, RR.	72	E1
WIRE HARNESS	106	F6

GRID F7

FRAME

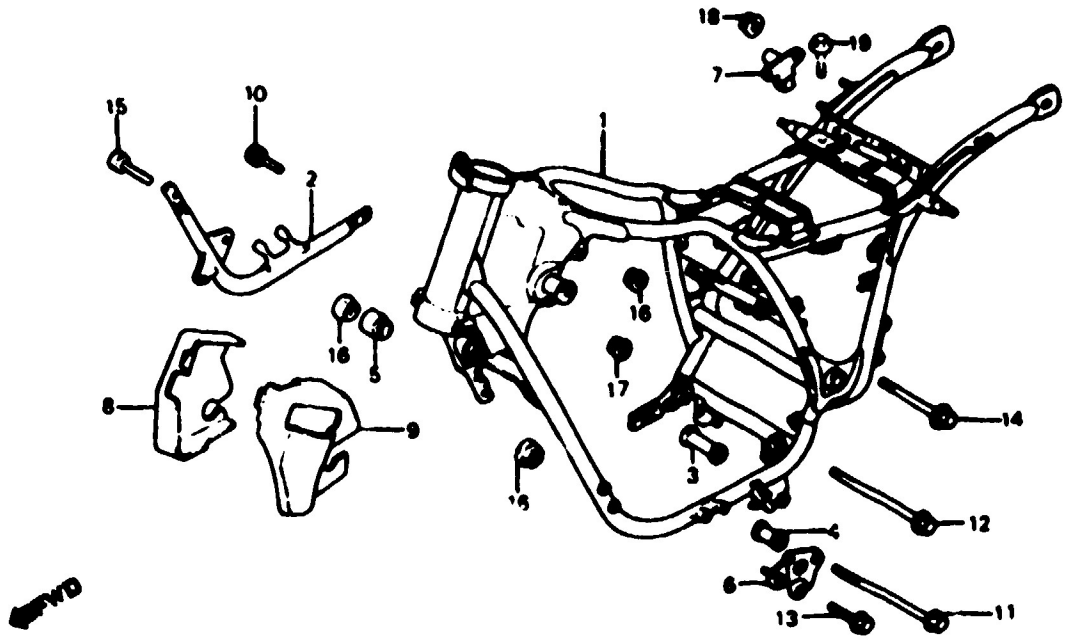

F14ME9091

Ref. No.	DESCRIPTION	FRAME SERIAL NUMBER FROM	FRAME SERIAL NUMBER TO	QTY REQ	PART NUMBER	HONDA CODE
	VT750C'83 BLOCK NO. F-31					
1	FRAME COMP. *NH1* (BLACK)	-------	-------	1	50100-ME9-670ZA	1370220
	FRAME COMP. *NH1* (BLACK)	-------	-------	1	50100-ME9-770ZA	1536275
2	PIPE COMP., JOINT	-------	-------	1	50174-ME9-670	1374909
3	COLLAR, R. FR. ENGINE UPPER	-------	-------	1	50200-ME9-000	1374917
4	COLLAR, L. FR. ENGINE UPPER	-------	-------	1	50201-ME9-000	1374925
5	CAP, FR. ENGINE HANGER	-------	-------	1	50311-MA1-730	1087535
6	PLATE, L. FR. ENGINE HANGER	-------	-------	1	50311-ME9-000	1374933
7	HOLDER ASSY., HELMET	-------	-------	1	50710-ME9-003	1370378
8	COVER, R. FR. SIDE	-------	-------	1	63500-ME9-000	1370600
9	COVER, L. FR. SIDE	-------	-------	1	63600-ME9-000	1370618
10	BOLT, SOCKET, 10X20	-------	-------	2	90108-ME9-000	1436294
11	BOLT, FLANGE, 10X246	-------	-------	1	90111-ME9-000	1371004
12	BOLT, FLANGE, 12X215	-------	-------	1	90112-ME9-000	1371012
13	BOLT, ENGINE HANGER, 8X55	-------	-------	2	90114-ME9-000	1374941

© AMERICAN HONDA MOTOR CO., LTD. 1983

VT750C'83 ENGINE NO.; RC14E-2000051 TO 2022747
VT750C'83 FRAME NO.; RC140-DM000035 TO DM022807

VT750C'83

BLOCK NO. F-31

Ref. No.	DESCRIPTION	FRAME SERIAL NUMBER FROM	FRAME SERIAL NUMBER TO	QTY REQ	PART NUMBER	HONDA CODE
14	BOLT, FLANGE, 10X105	-------	-------	1	90117-ME9-000	1371046
15	BOLT, SOCKET, 10X30	-------	-------	2	90152-MB0-000	1251107
16	NUT, FLANGE, 10MM	-------	-------	3	90303-428-900	1078187
17	NUT, FLANGE, 12MM	-------	-------	1	90305-428-900	1510395
18	NUT, FLANGE, 6MM	-------	-------	2	94050-06080	0612689
19	BOLT, FLANGE, 6X10	-------	-------	1	95700-06010-08	0344952
	BOLT, FLANGE, 6X10	-------	-------	1	95701-06010-08	2204709

© AMERICAN HONDA MOTOR CO., LTD. 1983

CONTENTS

TITLE	PAGE	GRID
AIR CLEANER	86	E8
ALTERNATOR	17	B8
BATTERY	84	E7
BRAKE CALIPER, FR.	66	D10
BRAKE PANEL, RR.	70	D12
BRAKE PEDAL	90	E10
CABLE	52	D3
CAM CHAIN	10	B5
CAMSHAFT	8	B4
CARBURETOR ASSY	41	C8
CARBURETOR COMPONENT	42	C9
CHANGE PEDAL	90	E10
CLUTCH	13	B6
CLUTCH MASTER CYLINDER	56	D5
CRANKCASE	26	C1
CRANKCASE COVER, L.	17	B8
CRANKCASE COVER, R.	11	B5
CRANKSHAFT	26	C2
CROSS SHAFT	38	C7
CYLINDER	4	B2
CYLINDER	6	B3
CYLINDER HEAD COVER	2	B1
CYLINDER HEAD, FR.	4	B2
CYLINDER HEAD, RR.	6	B3
FENDER, FR.	62	D8
FENDER, RR.	100	F3
FINAL DRIVEN GEAR	73	E1
FORK, FR.	63	D8
FR. BRAKE MASTER CYLINDER	54	D4
FRAME	110	F8
FUEL PUMP	84	E7
FUEL TANK	77	E3
GASKET KIT A	44	C10
GASKET KIT B	46	C11
GEARSHIFT DRUM	34	C5
HANDLEBAR	58	D6
HEADLIGHT	48	D1
HORN	60	D7
IGNITION COIL	106	F6
MUFFLER	88	E9
OIL FILTER	23	B11
OIL PUMP	23	B11
PISTON	28	C2
RADIATOR	108	F7
SEAT	80	E5
SHOCK ABSORBER	98	F2
SIDE COVER	82	E6
SPARK UNIT	100	F3
SPEEDOMETER	50	D2
STAND	94	E12
STARTING DRIVEN GEAR	16	B8
STARTING MOTOR	21	B10
STEERING STEM	60	D7
STEP	92	E11
SWINGARM	95	E12
SWITCH	52	D3
TACHOMETER	50	D2
TAILLIGHT	104	F5
TENSIONER	10	B5
THERMOSTAT	36	C6
TOOLS	112	F9
TOP BRIDGE	58	D6
TRANSMISSION	32	C4
TURN SIGNAL	102	F4
VALVE	8	B4
WATER PIPE	36	C6
WATER PUMP	19	B9
WHEEL, FR.	68	D11
WHEEL, RR.	72	E1
WIRE HARNESS	106	F6

GRID **F8**

TOOLS

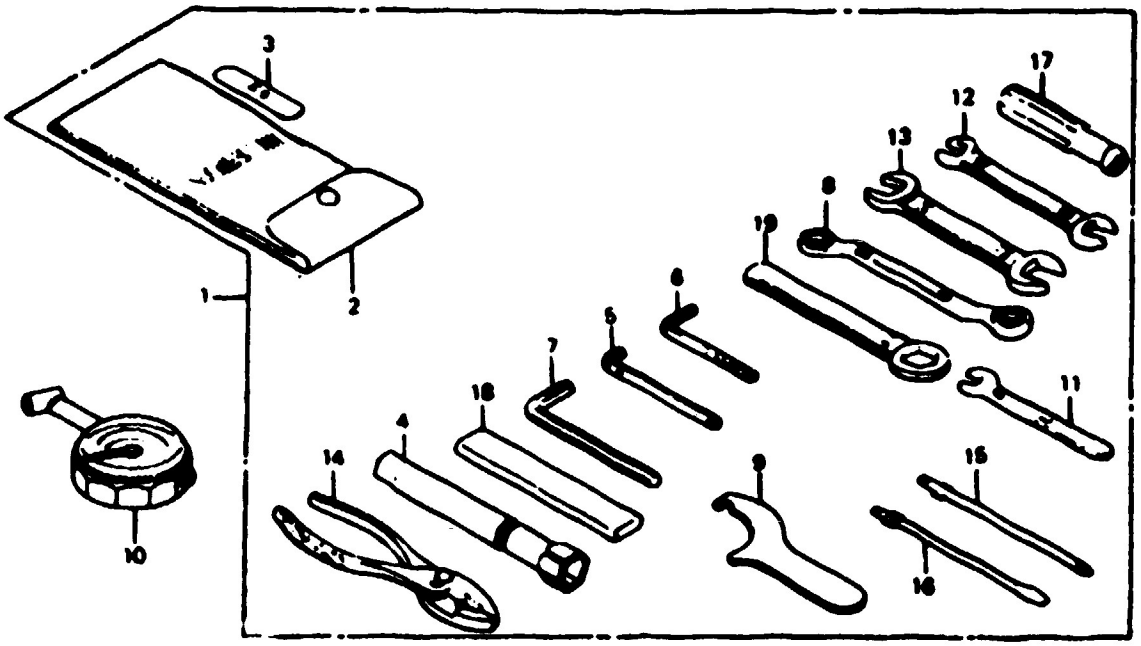

F14ME9032

VT750C'83

BLOCK NO. F-32

Ref. No.	DESCRIPTION	FRAME SERIAL NUMBER FROM	FRAME SERIAL NUMBER TO	QTY REQ	PART NUMBER	HONDA CODE
1	TOOL SET	-------	-------	1	89010-MB1-000	1252535
2	BAG, TOOL	-------	-------	1	89101-300-010	0192369
	BAG, TOOL, 200MM	-------	-------	1	99008-02000	0268185
3	GAUGE, FEELER, 0.7	-------	-------	1	89103-371-000	0443663
4	WRENCH, PLUG	-------	-------	1	89216-MB0-000	1260751
5	WRENCH, HEX., 5MM	-------	-------	1	89221-MB0-000	1250778
6	WRENCH, HEX., 5MM	-------	-------	1	89221-429-000	0786046
7	WRENCH, HEX., 8MM	-------	-------	1	89222-371-000	0408724
8	WRENCH, EYE, 10X12	-------	-------	1	89227-461-000	0918813
9	SPANNER, PIN	-------	-------	1	89230-MB1-000	1250786
10	GAUGE, AIR PRESSURE	-------	-------	(1)	89301-461-003	0918821
11	SPANNER, 8MM	-------	-------	1	99001-08000	0342766
12	SPANNER, 10X12	-------	-------	1	99001-10120	0187559
13	SPANNER, 14X17	-------	-------	1	99001-14170	0187567
14	PLIERS, 135	-------	-------	1	99002-13500	0069252
15	DRIVER 1, PLUS SCREW (NO.2)	-------	-------	1	99003-10000	0052423

© AMERICAN HONDA MOTOR CO. LTD. 1983

VT750C'83 ENGINE NO.; RC14E-2000051 TO 2022747
VT750C'83 FRAME NO.; RC140-DM000035 TO DM022807

VT750C '83 Ref. No.	BLOCK NO. F-32 DESCRIPTION	FRAME SERIAL NUMBER FROM	 TO	QTY REQ	PART NUMBER	HONDA CODE
16	DRIVER 3, MINUS SCREW (NO.2)	-------	-------	1	99003-30000	0052449
17	GRIP	-------	-------	1	99003-50000	0052464
18	HANDLE, EYE WRENCH, 120MM	-------	-------	1	99006-12000	0270496
19	WRENCH, EYE, 22MM	-------	-------	1	99006-22000	0268227

© AMERICAN HONDA MOTOR CO., LTD. 1983

CONTENTS

TITLE	PAGE	GRID
AIR CLEANER	86	E8
ALTERNATOR	17	B8
BATTERY	84	E7
BRAKE CALIPER, FR	66	D10
BRAKE PANEL, RR	70	D12
BRAKE PEDAL	90	E10
CABLE	52	D3
CAM CHAIN	10	B5
CAMSHAFT	8	B4
CARBURETOR ASSY	41	C8
CARBURETOR COMPONENT	42	C9
CHANGE PEDAL	90	E10
CLUTCH	13	B6
CLUTCH MASTER CYLINDER	56	D5
CRANKCASE	26	C1
CRANKCASE COVER, L	17	B8
CRANKCASE COVER, R	11	B5
CRANKSHAFT	28	C2
CROSS SHAFT	38	C7
CYLINDER	4	B2
CYLINDER	6	B3
CYLINDER HEAD COVER	2	B1
CYLINDER HEAD, FR	4	B2
CYLINDER HEAD, RR	6	B3
FENDER, FR	62	D8
FENDER, RR	100	F3
FINAL DRIVEN GEAR	73	E1
FORK, FR	63	D6
FR. BRAKE MASTER CYLINDER	54	D4
FRAME	110	F8
FUEL PUMP	84	E7
FUEL TANK	77	E3
GASKET KIT A	44	C10
GASKET KIT B	46	C11
GEARSHIFT DRUM	34	C5
HANDLEBAR	58	D6
HEADLIGHT	48	D1
HORN	60	D7
IGNITION COIL	106	F6
MUFFLER	88	E9
OIL FILTER	23	B11
OIL PUMP	23	B11
PISTON	28	C2
RADIATOR	108	F7
SEAT	80	E5
SHOCK ABSORBER	98	F2
SIDE COVER	82	E6
SPARK UNIT	100	F3
SPEEDOMETER	50	D2
STAND	94	E12
STARTING DRIVEN GEAR	16	B8
STARTING MOTOR	21	B10
STEERING STEM	60	D7
STEP	92	E11
SWINGARM	95	E12
SWITCH	52	D3
TACHOMETER	50	D2
TAILLIGHT	104	F5
TENSIONER	10	B5
THERMOSTAT	36	C6
TOOLS	112	F9
TOP BRIDGE	58	D6
TRANSMISSION	32	C4
TURN SIGNAL	102	F4
VALVE	8	B4
WATER PIPE	36	C6
WATER PUMP	19	B9
WHEEL, FR	68	D11
WHEEL, RR	72	E1
WIRE HARNESS	106	F6

GRID **F9**

Part Number Index

Part Number	Grid	Page
(0)		
061A1-ME9-000	C10	44
061A1-ME9-305	C10	44
061B1-ME9-000	C11	46
06430-415-000	D12	71
(1)		
11100-ME9-000	C1	26
11146-ME9-000	C1	26
11200-ME9-000	C1	26
11211-ME9-010	C1	26
11330-ME9-000	B5	11
11331-ME9-000	B5	11
11341-ME9-000	E12	95
11342-ME9-000	B9	19
11361-ME9-000	B8	17
11361-ME9-770	B8	17
11362-ME9-000	B8	17
11370-ME9-000	B5	11
11372-ME9-000	B5	11
	C11	46
11394-ME9-000	B5	11
	C11	46
11394-MK7-306	B5	11
	C11	46
11394-MK7-670	B5	11
	C11	46
11395-ME9-000	B8	17
	C11	46
12100-ME9-000	B2	4
12110-ME9-000	B3	6
12191-ME9-305	B2	4
	B3	6
	C10	44
12209-MB9-003	B4	8
	C10	44
12209-300-003	B4	8
	C10	44
12210-ME9-000	B2	4
12220-ME9-000	B3	6
12221-ME9-000	B2	4
	B3	6
12225-ME9-000	B2	4
	B3	6
12230-ME9-000	B2	4
12230-ME9-010	B2	4
12231-ME9-305	B2	4
	B3	6
12231-MG8-305	B2	4
	B3	6
12232-ME9-000	B1	2
12232-ME9-000	C10	44
12232-ME9-306	B1	2
	C10	44
12233-ME9-305	B2	4
	B3	6
12233-MG8-405	B2	4
	B3	6
12250-ME9-305	B2	4
	B3	6
	C10	44
12251-ME9-000	B2	4
	B3	6
	C10	44
12310-ME9-000	B1	2
12312-428-000	B2	4
	B3	6
12320-ME9-000	B1	2
12321-ME9-000	B1	2
	C10	44
12321-ME9-306	B1	2
	C10	44
12330-ME9-000	B1	2
12331-ME9-000	B1	2
12340-ME9-000	B1	2
12361-035-000	E1	73
12361-300-000	E1	73
12361-371-980	E1	73
13011-ME9-004	C2	29
13011-ME9-005	C2	29
13021-ME9-004	C2	29
13021-ME9-005	C2	29
13031-ME9-004	C2	29
13031-ME9-005	C2	29
13101-ME9-000	C2	29
13101-ML5-000	C2	29
13102-ME9-000	C2	29
13102-ML5-000	C2	29
13103-ME9-000	C2	29
13103-ML5-000	C2	29
13111-GK8-000	B8	16
13111-GS7-000	B8	16
13111-ME9-000	C2	29
13111-122-000	B8	16
13205-ME2-000	C2	29
13210-ME9-000	C2	29
13213-ME2-000	C2	29
13218-ME9-003	C3	31
13219-ME9-003	C3	31
13220-ME9-003	C3	31
13300-ME9-000	C3	31
13300-ME9-780	C3	31
13325-ME9-305	C3	31
13326-ME9-305	C3	31
13327-ME9-305	C3	31
14111-ME9-000	B4	8
14111-ME9-010	B4	8
14121-ME9-000	B4	8
14121-ME9-010	B4	8
14311-ME9-000	C3	31
14322-ME9-000	B5	10
14401-ME9-003	B5	10
14401-ME9-004	B5	10
14401-MR5-671	B5	10
14451-ME9-000	B4	8
14452-ME9-000	B4	8
14453-ME9-000	B4	8
14461-ME9-010	B4	9
14462-ME9-000	B4	8
14462-ME9-010	B4	8
14463-ME9-000	B4	8
14465-ME9-000	B4	8
14466-ME9-000	B4	8
14467-ME9-000	B4	8
14470-ME9-000	B4	9
14470-ME9-010	B4	9
14510-ME9-000	B5	10
14510-ME9-010	B5	10
14510-ME9-020	B5	10
14516-471-000	B5	10
14522-ME9-000	B5	10
14611-ME9-000	B4	9
14630-ME9-003	B4	9
14711-ME9-000	B4	9
14721-ME9-000	B4	9
14751-ME9-000	B4	9
14752-ME9-000	B4	9
14762-ME9-000	B4	9
14771-410-010	B4	9
14775-ME9-000	B4	9
14781-MB9-000	B4	9
15100-ME9-000	B11	23
15100-ME9-770	B11	23
15131-MB0-000	B6	13
15134-MB0-000	B11	23
15134-MB0-010	B11	23
15153-425-000	B11	23
15154-425-000	B11	23
	C11	46
15155-300-000	B11	23
	C1	26
15161-ME5-003	B11	23
15171-ME9-000	C1	26
15172-ME9-000	C1	26
15220-MB0-010	B11	23
15400-679-013	B11	23
15400-679-023	B11	23
15410-MB0-000	B11	23
15410-MB0-003	B11	23

© AMERICAN HONDA MOTOR CO., INC. 1993

Part Number Index

Part Number	Grid	Page
15410-MB3-003	B11	23
15410-MJ0-003	B11	23
15410-MJ0-004	B11	23
15511-ME9-000	B12	24
15650-MK7-670	B5	11
15650-449-000	B5	11
16010-MB6-305	C9	42
16010-ME9-671	C9	42
16010-ME9-672	C9	42
16010-ME9-721	C9	42
16011-MB0-671	C9	42
16011-MR6-671	C9	42
16013-MB0-671	C9	42
16015-ME9-671	C9	42
16015-MG8-721	C9	42
16016-MB0-671	C9	42
16016-ME3-003	C9	42
16016-ME9-671	C9	42
16026-ME9-671	C8	41
16028-KM9-771	C8	41
16028-ME9-671	C8	41
16029-MB0-671	C9	42
16037-ME9-671	C9	42
16046-ME9-671	C9	42
16046-ME9-672	C9	42
16050-ME9-671	C9	43
16052-ME9-671	C9	43
16052-ME9-672	C9	43
16053-ME9-671	C8	41
16053-ME9-672	C8	41
16053-MG7-601	C8	41
16080-ME9-671	C8	41
16081-ME9-671	C8	41
16082-ME9-671	C8	41
16097-ME9-671	C9	43
16100-ME9-671	C8	41
16100-ME9-672	C8	41
16101-ME9-671	C8	41
16102-ME9-671	C8	41
16107-ME9-671	C9	43
16111-ME9-000	D3	52
16111-ME9-671	C9	43
16118-ME9-671	C9	43
16131-ME9-671	C9	43
16165-ME9-671	C9	43
16199-ME9-671	C8	41
16211-ME9-000	B2	4
	B3	6
16219-ME9-000	B2	4
	B3	6
16700-ME9-005	E7	84
16700-ME9-015	E7	84
16701-ME9-003	E7	84
16702-ME9-000	E7	84
16900-371-004	E7	84
16950-ME9-003	E7	84
16956-ME9-000	E7	84
16956-ME9-770	E7	84
16957-ME9-000	E7	84
16960-ME9-000	E7	84
16969-MB1-000	E3	77
	E7	84
17210-ME9-000	E8	86
17210-ME9-010	E8	86
17211-ME9-000	E8	86
17212-ME9-000	E8	86
17213-ME9-670	E8	86
17215-ME9-000	E8	86
17215-ME9-770	E8	86
17216-ME9-000	E8	86
17217-ME9-000	E8	86
17218-ME9-000	E8	86
17221-ME9-000	E8	86
17223-ME9-000	E8	86
17224-ME9-000	E8	86
17225-ME9-000	E8	86
17227-ME9-300	E8	86
17228-ME9-000	E8	86
17245-167-010	E3	77
17251-ME9-000	E8	87
17254-ME9-000	E8	87
17255-ME9-000	E8	87
17256-425-010	E8	87
17257-ME9-300	E8	87
17335-ME9-000	E8	87
17359-419-670	E8	87
	F7	108
17370-419-700	E8	87
17402-ME9-000	E8	87
175A1-ME9-000ZA	E3	77
175A1-ME9-000ZB	E3	77
175A1-ME9-010ZA	E3	77
175A1-ME9-010ZB	E3	77
17511-ME9-000	E3	77
17513-ME9-000	E7	84
17514-ME9-000	E7	84
17515-ME9-000	E7	84
17516-ME9-000	E7	84
17519-ME9-003	E3	77
17531-ME9-300	E3	77
17532-ME9-300	E3	77
17550-ME9-000	E3	77
17552-MA1-000	E8	87
17555-ME9-000	E3	77
17611-449-010	E3	77
17612-449-000	E4	78
17613-ME9-000	E4	78
17620-MB1-003	E4	78
17620-MB1-013	E4	78
17620-MB1-023	E4	78
17620-MB1-033	E4	78
17724-102-700	E8	87
17910-ME5-000	D3	52
17910-ME9-670	D3	52
17920-ME9-670	D3	52
17950-ME9-305	D3	52
17950-ME9-670	D3	52
17962-MB0-000	D3	52
17962-MB0-010	D3	52
17962-ME8-000	D3	52
17963-MB0-000	D5	56
17963-MB0-010	D5	56
17963-ME8-000	D5	56
17964-ME9-000	D3	52
18291-ME9-000	C10	44
	E9	88
18293-ME9-000	E9	88
18300-ME9-671	E9	88
18300-ME9-771	E9	88
18320-ME9-000	E9	88
18320-ME9-771	E9	88
18376-ME9-003	E9	88
18377-ME9-003	E9	88
18392-449-000	E9	88
18413-ME9-670	E9	88
18413-MG8-000	E9	88
18415-ME9-000	E9	88
18415-ME9-771	E9	88
18416-ME9-000	E9	88
18417-ME9-000	E9	88
18418-ME9-670	E9	88
18418-ME9-770	E9	89
18420-ME9-000	E9	89
18420-ME9-771	E9	89
18455-ME9-003	E9	89
18456-ME9-003	E9	89
19010-ME9-003	F7	108
19015-ME9-003	F7	108
19020-ME9-003	F7	108
19030-ME9-004	F7	108
19032-ME9-000	F7	108
19032-ME9-770	F7	108
19035-ME9-003	F7	108
19038-ME9-000	F7	108
19045-MB0-702	F7	108
19102-463-000	F7	108
19103-ME9-000	F7	108
19104-ME9-000	F7	108
19112-ME9-000	F7	108
19113-MB0-000	F7	108
19114-MB0-000	F7	109
19116-ME9-000	C6	36

© AMERICAN HONDA MOTOR CO., INC. 1993

Part Number Index

Part Number	Grid	Page
19117-ME9-000	F7	109
19118-ME9-000	F7	109
19120-ME9-000	F7	109
19120-ME9-010	F7	109
19200-ME9-000	B9	19
19200-ME9-010	B9	19
19200-ME9-020	B9	19
19200-ME9-030	B9	19
19205-MF5-000	F7	108
19221-ME9-000	B9	19
19226-ME9-000	B9	19
	C11	46
19300-MB0-003	C6	36
19311-ME9-000	C6	36
19315-ME9-000	C6	36
19315-ME9-010	C6	36
19501-ME9-000	C6	36
19501-ME9-010	C6	36
19502-ME9-000	C6	36
19502-ME9-010	C6	36
19505-ME9-000	C6	36
19506-KA4-000	C6	36
	F7	109
19506-ME9-000	C6	36
19508-ME9-000	C6	36
19509-ME9-000	C6	36
19509-ME9-010	C6	36
19511-ME9-000	C6	36
19511-ME9-010	C6	37
19512-ME9-000	C6	37
19512-ME9-010	C6	37
19514-ME9-003	C6	37
19515-ME9-000	C6	37
19521-ME9-000	C6	37
19522-ME9-000	C6	37
(2)		
21100-ME9-000	C7	38
21200-ME9-000	C7	38
21215-ME9-000	C7	38
21281-ME9-000	C7	38
21294-ME9-000	C7	38
	C11	46
21311-ME9-000	C7	38
21312-ME9-000	C7	38
21313-ME9-000	C7	38
21314-ME9-000	C7	38
21315-ME9-000	C7	38
21371-MB0-000	C7	38
21381-MB0-770	C7	38
21382-MB0-770	C7	38
21383-MB0-770	C7	38
21384-MB0-770	C7	38
21385-MB0-770	C7	39
22100-ME9-000	B6	13
22100-MN2-000	B6	13
22116-MB0-000	B6	13
22117-ME9-000	B6	13
22120-MB0-770	B6	13
22131-MB0-770	B6	13
22141-MB0-770	B6	13
22151-MB0-770	B6	13
22201-MB0-003	B6	13
22201-ME9-000	B6	13
22201-MG8-000	B6	13
22201-MG8-010	B6	13
22201-MM5-000	B6	13
22321-MG8-000	B6	13
22321-283-000	B6	13
22351-MB0-770	B7	14
22351-MB0-771	B7	14
22352-MB0-770	B7	14
22366-MB0-000	B7	14
22425-MB0-772	B7	14
22441-MBC-771	B7	14
22850-ME9-000	B7	14
22851-ME9-000	C1	26
22860-ME9-000	B9	19
22862-MB0-000	B9	19
	C11	46
22863-MB0-003	B9	19
22864-MB0-003	B10	20
22865-MB0-003	B10	20
	B10	21
22880-ME9-315	D5	56
22880-ME9-673	D5	56
22884-MB0-006	D5	56
22885-MB0-006	D5	56
22886-MB0-305	D5	56
22900-ME9-003	D5	56
22900-ME9-013	D5	56
23103-ME9-000	B7	14
23105-ME9-000	C3	31
23200-ME9-000	C7	39
23211-ME9-000	C4	32
23212-ME9-000	C4	32
23221-ME9-000	C4	32
23421-ME9-000	C4	32
23422-ME9-000	C4	32
23431-MB0-000	C4	32
23431-MB0-010	C4	32
23441-MB0-000	C4	32
23442-MB0-000	C4	32
23461-MB0-000	C4	32
23462-MB0-000	C4	32
23471-MB0-000	C4	32
23481-MB0-000	C4	32
23491-MB0-000	C4	32
23495-MB0-000	C4	33
23501-MB0-000	C4	33
23501-MB0-010	C4	33
23501-MN0-000	C4	33
23511-MB0-000	C4	33
23512-MB0-000	C4	33
23521-MB0-000	C4	33
23521-MB0-010	C4	33
23721-ME9-000	C7	39
23725-ME9-000	C4	33
23726-ME9-000	C7	39
23732-ME9-000	C7	39
23733-ME9-000	C7	39
23901-567-010	C4	33
24211-ME9-000	C5	34
24212-MB0-770	C5	34
24213-ME9-000	C5	34
24261-ME9-000	C5	34
24302-ME9-000	C5	34
24304-ME9-000	C5	34
24411-ME9-003	C5	34
24413-KA6-003	C5	34
24430-ME9-000	C5	34
24435-ME9-000	C5	34
24610-ME9-000	C5	34
24610-ME9-010	C5	34
24615-ME9-000	C5	35
24618-ME9-000	C5	35
24621-446-650	C5	35
24631-362-000	C5	35
24651-ME9-000	C5	35
24660-ME9-305	C5	34
	C5	35
24660-ME9-315	C5	34
	C5	35
24700-ME9-670	E10	90
24710-ME9-000	C5	35
24781-419-000	E10	90
28101-ME9-000	B8	16
28101-ME9-010	B8	16
28102-ME9-000	B8	16
28106-ME9-000	B8	16
28106-ME9-010	B8	16
28110-ME9-000	B8	16
28110-MG7-000	B8	16
28120-ME9-000	B8	17
28125-ME9-003	B8	17
28125-ME9-013	B8	17

© AMERICAN HONDA MOTOR CO., INC. 1993

Part Number Index

Part Number	Grid	Page
(3)		
30300-ME9-154	B8	17
30400-ME9-005	F3	100
30501-428-003	F6	106
30502-428-003	F6	106
30503-428-003	F6	106
30505-ME9-003	F6	106
30510-ME9-003	F6	106
30510-ME9-013	F6	106
30700-ME9-000	F6	106
30700-MF5-153	F6	106
30701-ME9-000	F6	106
30701-MG7-000	F6	106
30751-ME9-000	F6	106
30752-ME9-000	F6	106
30753-ME9-000	F6	106
30754-ME9-000	F6	106
31100-ME9-005	B8	17
31110-ME9-005	B8	17
31120-ME9-005	B8	17
31200-ME9-008	B10	21
31200-MK7-405	B10	21
31201-ME9-000	B10	21
31204-MA6-000	B10	21
31205-ME9-780	B10	21
31206-MC8-008	B10	21
31207-179-711	B10	21
31500-ME9-611	E7	84
31500-ME9-671	E7	85
31500-ME9-672	E7	85
31500-ME9-673	E7	85
31500-ME9-674	E7	85
31502-ME9-000	E7	85
31600-ME9-008	E6	83
31700-124-003	F6	106
31700-124-008	F6	107
32100-ME9-000	F6	107
32101-ME9-000	C1	26
32104-ME9-000	F6	107
32105-ME9-000	F7	109
32108-046-000	F6	107
32110-ME9-000	F6	107
32161-393-003	F6	107
32161-404-000	D3	52
32161-404-610	F6	107
32401-ME9-000	E6	83
32411-230-000	B10	21
32411-253-000	B10	21
32412-ME9-000	B10	21
32414-ME9-000	E6	83
32416-460-000	B10	21
	E6	83
32450-ME9-003	D2	50
32451-ME9-000	D2	50
32452-ME9-000	D2	50
32601-ME9-000	B10	21
32800-ME9-000	F6	107
32801-ME9-000	F6	107
32802-ME9-000	F6	107
32961-ME9-000	B8	17
32962-ME9-000	B8	17
32963-ME9-000	B8	17
32964-ME9-000	B8	17
33100-ME9-671	D1	48
33100-MF5-751	D1	48
33101-MB1-003	D1	48
33103-346-670	D1	48
33107-300-003	D1	48
33117-415-003	D1	48
33119-371-003	D1	48
33120-MB1-671	D1	48
33120-MB1-770	D1	48
33120-ME9-670	D1	48
33120-ME9-671	D1	48
33120-MF5-751	D1	48
33128-292-670	D1	48
33180-422-003	D1	48
33400-ME9-671	F4	102
33400-MF5-405	F4	102
33400-MF5-770	F4	102
33400-MF5-840	F4	102
33400-MG8-670	F4	102
33401-MB1-003	F4	102
33402-MB1-003	F4	102
33403-MB1-671	F4	102
33405-ME9-671	F4	102
33405-MF5-770	F4	102
33405-MM2-405	F4	102
33407-MB1-003	F4	102
33408-MB1-003	F4	102
33450-ME9-671	F4	102
33450-MF5-770	F4	103
33450-MG8-670	F4	102
33455-ME9-671	F4	103
33455-MF5-770	F4	103
33490-MB1-003	F4	103
33600-ME5-671	F4	103
33600-ME9-671	F4	103
33600-MG8-405	F4	103
33600-MK3-405	F4	103
33605-ME5-003	F4	103
33605-ME9-003	F4	103
33650-ME9-671	F4	103
33650-ME9-770	F4	103
33655-ME9-003	F4	103
33655-ME9-770	F4	103
33655-MJ1-000	F4	103
33690-MB1-003	F4	103
33701-ME9-671	F5	104
33701-ME9-770	F5	104
33702-MB1-671	F5	104
33702-MB1-672	F5	104
33703-MB1-671	F5	104
33708-ME9-003	F5	104
33708-ME9-770	F5	104
33709-MB1-003	F5	104
33718-MB1-003	F5	104
33720-ME9-671	F5	104
33720-ME9-770	F5	104
33721-MB1-671	F5	104
33721-ME9-000	F5	104
33722-MB1-003	F5	104
33722-MB1-013	F5	104
33725-ME9-671	F5	104
33725-ME9-770	F5	105
33727-ME9-003	F5	105
33729-MB1-003	F5	105
33741-ME9-671	F7	109
33741-ME9-672	F7	109
33741-ME9-673	F7	109
33742-ME9-671	F3	100
33742-ME9-672	F3	100
33743-ME9-671	F3	100
33743-ME9-672	F3	100
33745-ME9-000	F3	100
34616-568-671	F5	105
34901-MC7-601	D1	48
34901-MC7-601AH	D1	48
34902-500-003	F5	105
34905-268-671	F4	103
34905-425-671	F4	103
34906-425-771	F5	105
34908-MB0-003	D2	50
34908-272-000	F5	105
34909-505-003	F5	105
34909-505-610	F5	105
35010-ME9-000	D6	58
35010-ME9-010	D6	58
35010-ME9-020	D6	58
35010-ME9-030	D6	58
35100-ME9-000	D6	58
35100-MF8-000	D6	58
35101-ME9-007	D6	58
35105-ME9-003	D6	58
35105-MK7-000	D6	58
35121-KW3-771	D6	58
35121-MA6-811	D6	58
35122-KW3-771	D6	58
35122-MA6-811	D6	58
35130-ME9-305	D3	52
35130-ME9-670	D3	53

© AMERICAN HONDA MOTOR CO. INC. 1993

Part Number Index

Part Number	Grid	Page
35200-ME9-670	D3	53
35229-ME9-000	F3	100
35330-MB0-003	D5	56
35340-MA5-671	D4	54
35340-ML7-000	D4	54
35340-MM5-600	D4	54
35350-MB0-000	E10	90
35350-ME9-405	E10	90
35350-ME9-770	E10	90
35355-ME9-003	E10	90
35357-ME9-000	E10	90
35500-MB9-004	C1	26
35500-MJ0-004	C1	26
35500-MJ4-004	C1	26
35500-MJ4-014	C1	26
35500-MJ4-024	C1	26
35550-ME9-670	F3	100
35600-425-003	C1	26
35600-425-013	C1	26
35600-425-023	C1	27
35850-ME9-000	E6	83
35856-ME9-000	E6	83
36100-MB1-701	E7	85
36101-ME9-008	E7	85
37120-ME9-009	D2	50
37121-ME9-009	D2	50
37200-ME9-671	D2	50
37203-ME9-009	D2	50
37204-ME9-009	D2	50
37205-ME9-009	D2	50
37206-ME9-009	D2	50
37220-439-007	F3	100
37250-ME9-009	D2	50
37250-ME9-019	D2	50
37253-ME9-009	D2	50
37254-ME9-009	D2	50
37600-ME9-671	D2	51
37600-ME9-771	D2	51
37601-ME9-671	D2	51
37602-ME9-009	D2	51
37619-ME9-671	D2	51
37640-MB1-701	E7	85
37750-ME9-003	C6	37
37760-MC7-003	F7	109
37810-MB4-008	E4	78
38110-ME9-004	D7	60
38110-ME9-612	D7	60
38120-ME9-004	D7	60
38120-ME9-612	D7	60
38231-SA5-003	D2	51
38250-ME9-005	E6	83
38251-KJ9-000	E6	83
38251-MA6-005	E6	83
38252-ME9-005	E6	83
38253-4[illegible]2-005	E6	83
38301-MB[illegible]-004	E6	83
38306-292-000	E6	83
(4)		
40200-ME9-003	E12	95
40201-ME9-003	E12	95
40207-ME9-000	E12	95
40215-ME9-003	E12	95
40221-MB0-000	E12	95
41300-ME9-000	E1	73
41301-ME9-000	E1	73
41303-463-300	E1	73
41306-MB0-010	E1	73
41306-ME5-305	E1	73
41310-MB0-305	E1	73
41312-MB4-770	E1	73
41321-MB0-010	E1	73
41324-MB0-010	E1	73
41331-ME9-000	E1	73
41331-ME9-010	E1	73
41332-415-000	E1	73
41333-415-000	E1	73
41410-ME9-000	E2	74
41433-MB0-010	E2	74
41436-MB0-310	E2	74
41437-MB0-310	E2	74
41438-MB0-310	E2	74
41450-MB0-000	E2	74
41451-MB0-000	E2	74
41452-MB0-000	E2	74
41453-MB0-000	E2	74
41454-MB0-000	E2	74
41455-MB0-000	E2	74
41456-MB0-000	E2	74
41510-MB0-003	E2	74
41530-MB0-000	E2	74
41531-MB0-000	E2	74
41532-MB0-000	E2	74
41533-MB0-000	E2	75
41534-MB0-000	E2	75
41535-MB0-000	E2	75
41536-MB0-000	E2	75
41537-MB0-000	E2	75
41538-MB0-000	E2	75
42301-ME9-000	D12	70
42313-ME9-000	D12	70
42615-MB0-700	E1	72
42620-MB0-000	E1	72
42625-MB0-000	E2	75
42650-ME9-000	E1	72
42704-MB0-000	D11	68
42704-MB0-000	E1	72
42705-MB0-000	D11	68
	E1	72
42706-MB0-000	D11	68
	E1	72
42710-ME9-671	E1	72
42710-ME9-672	E1	72
42710-MG8-673	E1	72
42753-425-003	D11	68
	E1	72
42753-425-004	D11	68
	E1	72
431A2-415-000	D12	71
	E1	72
43100-ME5-000	D12	70
43102-319-000	D12	70
43106-222-300	D12	70
43120-415-000	D12	70
43134-300-000	D12	70
43141-MB0-000	D12	70
43145-ME5-000	D12	70
43352-568-003	B9	19
43353-461-771	B9	19
43410-ME9-000	D12	70
43411-ME9-003	D12	70
43431-ME9-000	E12	95
43431-ME9-010	E12	95
43434-ME1-670	E12	95
43450-ME9-671	E10	90
43456-ME9-000	E10	90
44301-461-770	D11	68
44311-461-770	D11	68
44620-MB0-000	D11	68
44650-ME9-000	D11	68
44680-410-000	D11	68
44710-ME9-671	D11	68
44710-461-772	D11	68
44710-461-773	D11	68
44800-ME9-013	D11	68
44806-ME9-003	D11	68
44809-402-000	D11	69
44830-ME9-000	D2	51
44831-KM1-000	D2	51
44831-MB1-300	D2	51
44831-ME1-670	D2	51
44832-ME9-000	D10	66
451A0-MC9-670	D10	67
	D11	68
45100-ME9-003	D10	66
45100-ME9-004	D10	66
45101-MA5-771	D10	66
45105-MC9-003	D10	66
45107-MA5-771	D10	66
45108-MA5-771	D10	66

© AMERICAN HONDA MOTOR CO., INC. 1993

Part Number Index

Part Number	Grid	Page
45108-425-003	D10	66
45109-MA5-771	D10	66
45109-166-006	D10	66
45110-MA5-771	D10	66
45111-MA5-771	D10	66
45124-ME9-003	D4	54
45124-ME9-013	D4	54
45125-ME9-003	D4	54
45125-ME9-013	D4	54
45126-ME9-003	D4	54
45126-ME9-013	D4	54
45127-ME9-000	D4	54
45128-ME2-003	D11	69
45131-MA5-771	D10	66
45133-MA5-771	D10	66
45133-329-000	D12	70
45134-MA5-771	D10	66
45200-ME9-003	D10	67
45200-ME9-004	D10	67
45201-MA5-771	D10	67
45209-183-003	D10	67
45210-MA5-771	D10	67
45215-MA5-771	D10	67
45217-MA5-771	D10	67
45224-413-003	D10	67
45251-ME2-000	D11	69
45500-ME9-673	D4	54
45512-MA6-006	D4	54
45517-MB0-006	D4	54
45520-MA5-671	D4	54
	D5	57
45520-MA5-672	D4	54
	D5	57
45522-422-000	D4	55
	D5	57
45530-MA5-671	D4	55
45540-MA6-621	D4	54
	D5	56
46500-ME9-000	E10	90
46510-ME9-000	E10	90
46514-ME9-000	E10	90
(5)		
50100-ME9-670ZA	F8	110
50100-ME[illegible]-770ZA	F8	110
50174-ME9-670	F8	110
50200-ME9-000	F8	110
50201-ME9-000	F8	110
50301-268-000	D7	60
50301-268-010	D7	60
50302-268-000	D7	60
50302-268-010	D7	60
50311-MA1-730	F4	103
	F8	110
50311-ME9-000	F8	110
50325-ME9-000	E7	85
50327-ME9-000	E7	85
50340-ME9-000	E7	85
50500-ME9-000	E12	94
50526-ME9-000	E12	94
50540-ME9-000	E12	94
50548-356-700	E12	94
50549-356-700	E12	94
50574-MB0-000	E12	94
50603-033-000	E11	92
50610-ME9-670	E11	92
50612-ME9-000	E11	92
50615-ME9-670	E11	92
50617-195-000	E11	92
50618-MB1-000	E11	92
50618-MF5-000	E11	92
50619-MB1-000	E11	92
50620-ME9-670	E11	92
50625-ME9-670	E11	92
50626-ME9-670	E11	92
50642-ME9-000	E11	92
50661-ME9-000	E11	92
50680-ME9-000	E11	92
50690-ME9-000	E11	92
50710-ME9-003	F8	110
50711-ME9-000	E11	92
50712-ME9-000	E11	93
50713-MB1-000	E11	93
50714-MB1-000	E11	93
51400-ME9-003	D8	63
51400-ME9-013	D8	63
51400-ME9-023	D8	63
51401-ME9-003	D8	63
51402-ME9-003	D8	63
51403-ME5-003	D8	63
51410-ME9-003	D8	63
51410-ME9-013	D8	63
51411-ME5-003	D8	63
51412-463-003	D8	63
51414-463-003	D8	63
51415-463-003	D8	63
51421-ME9-003	D8	63
51432-438-671	D8	63
51437-ME5-003	D8	63
51440-ME9-003	D8	63
51447-463-003	D9	64
51450-ME5-003	D9	64
51457-MG1-003	D9	64
51490-MB9-781	D9	64
51490-MB9-782	D9	64
51490-MG2-305	D9	64
51490-463-305	D9	64
51500-ME9-003	D9	64
51500-ME9-013	D9	64
51521-ME9-003	D9	64
52100-ME9-000	E12	95
52118-415-000	E12	95
52400-ME9-671	F2	98
52401-ME9-003	F2	98
52403-ME9-003	F2	98
52410-ME9-003	F2	98
52422-ME9-003	F2	98
52458-ME9-003	F2	98
52460-ME9-003	F2	98
52462-ME5-003	F2	98
52486-463-000	F2	98
52489-461-771	F2	98
52500-ME9-671	F2	98
52517-ME9-003	F2	98
53100-ME9-670	D6	58
53100-ME9-671	D6	58
53105-425-830	D6	58
53107-425-000	D6	59
53108-MK4-000	D6	59
53108-415-004	D6	59
53131-ME9-000	D6	59
53131-ME9-010	D6	59
53141-300-010	D3	53
53165-MB1-000	D3	53
53166-MB1-000	D3	53
53171-MB1-000	D3	53
53175-KE8-006	D4	55
53175-MJ6-006	D4	55
53178-KE8-006	D5	57
53200-ME9-000	D7	60
53211-268-000	D7	60
53211-268-010	D7	60
53212-250-000	D7	60
53212-250-010	D7	60
53214-250-000	D7	60
53215-250-000	D7	60
53220-KE8-010	D7	60
53220-ME9-000	D7	61
53230-ME9-000	D6	59
53230-ME9-610	D6	59
53240-MB1-010	D9	64
53240-MB1-020	D9	64
53240-MB1-030	D9	64
53240-MB1-040	D9	64
53240-MB1-050	D9	64
(6)		
61ME902	B1	2

© AMERICAN HONDA MOTOR CO., INC. 1993

Part Number Index

Part Number	Grid	Page
61100-ME9-000	D8	62
61104-357-000	E4	78
61104-428-000	E4	78
61105-428-000	E4	78
61108-MB0-000	E10	90
	F6	107
61301-ME9-000	D1	49
61312-ME9-000	D1	49
61313-ME9-000	D1	49
61400-ME9-000	D7	61
61400-ME9-770	D7	61
61405-ME9-000	D7	61
63500-ME9-000	F8	110
63600-ME9-000	F8	110
(7)		
77100-ME9-670	E5	80
77300-ME9-670	E5	80
77320-ME9-670	F3	100
77320-ME9-671	F3	100
77324-ME9-000	F3	100
77324-MG8-770	F3	100
77330-ME9-000	F3	100
77330-ME9-010	F3	100
77340-ME9-000	F3	100
77340-ME9-010	F3	101
(8)		
80100-ME9-000ZA	F3	101
80100-ME9-000ZB	F3	101
80102-MB1-770	F3	101
80105-ME9-000ZA	F3	101
80105-ME9-000ZB	F3	101
81192-MA1-740	F3	101
835A0-ME9-670ZA	E6	83
835A0-ME9-670ZB	E6	83
83551-ME9-000	E6	83
83551-300-000	D7	61
	E6	83
836A0-ME9-670ZA	E6	83
836A0-ME9-670ZB	E6	83
83605-ME9-670ZA	E6	83
83605-ME9-670ZB	E6	83
83618-323-000	E7	85
	F3	101
84701-ME9-670	F5	105
84703-425-000	F5	105
87505-ME9-670	E12	95
87506-ME9-670	E6	83
87507-ME9-670	F7	109
87508-415-670	F7	109
87511-323-670	F3	101
87512-461-770	F3	101
87517-MB1-770	D6	59
87523-413-710	D2	51
87560-ME9-670ZA	E4	78
88110-ME9-671	D3	53
88120-ME9-671	D3	53
89001-ME9-670	F3	101
89002-ME9-670	F3	101
89002-ME9-770	F3	101
89006-ME9-670	F3	101
89007-ME9-670	F3	101
89010-MB1-000	F9	112
89101-300-010	F9	112
89103-371-000	F9	112
89216-MB0-000	F9	112
89221-MB0-000	F9	112
89221-429-000	F9	112
89222-371-000	F9	112
89227-461-000	F9	112
89230-MB1-000	F9	112
89301-461-003	F9	112
(9)		
90001-ME9-000	C1	27
90005-ME9-000	C1	27
90006-ME9-000	C1	27
90009-ME9-000	B1	2
90010-KE5-000	B9	18
90010-ME9-000	B9	18
90011-ME9-003	C1	27
90011-323-000	B1	2
90011-471-000	B5	10
90012-ME9-003	C1	27
90013-ME9-003	C1	27
90013-415-000	C3	31
90019-MB0-000	B12	24
90021-ME9-000	C5	35
90022-ME9-000	C4	33
	C5	35
90023-041-000	C5	35
90023-041-010	C5	35
90025-ME9-000	B9	18
90025-ME9-010	B9	18
90025-MF5-000	B9	18
90026-ME9-000	B5	10
90026-MM8-000	B5	10
90035-ME9-000	B2	5
	B3	6
90037-ME9-000	C7	39
90038-ME9-000	C4	33
90041-MB0-000	C5	35
90042-ME9-000	C6	37
90045-ME9-000	B2	5
90051-ME9-000	B1	2
90052-ME9-000	B12	24
90053-ME9-000	C1	27
90054-ME9-000	B2	5
90055-ME9-000	C1	27
90061-MB0-000	C7	39
90062-ME9-003	C7	39
90063-ME9-003	C7	39
90071-MB0-000	B10	21
90071-ME9-000	B9	19
90072-ME9-000	B5	11
90073-ME9-000	B9	18
90074-ME9-000	B9	18
	E12	95
90075-ME9-000	B5	11
90076-ME9-000	B5	11
	B9	18
90077-ME9-000	B9	19
90081-MC7-000	C1	27
90087-ME9-000	B5	11
90088-ME9-000	B4	9
90101-MA5-771	D10	67
90102-673-003	E8	87
90104-MJ1-000	D6	59
90105-MA6-000	D6	59
90105-ME2-000	D11	69
90106-MF2-010	D11	69
90107-ME9-670	F3	101
90108-MB0-000	E12	94
90108-ME9-000	F8	110
90109-MB0-000	D1	49
90109-371-000	E2	75
90111-ME9-000	F8	110
90111-162-000	F7	109
90111-362-000	E4	78
90112-ME9-000	F8	110
90114-MA5-671	D4	55
	D5	57
90114-ME9-000	F8	110
90116-ME1-671	D9	64
90116-ME9-000	F7	109
90116-125-782	F3	101
90116-460-000	D2	51
90117-MB0-000	D4	55
	D5	57
90117-ME9-000	F8	111
90119-KV0-000	E11	93
90119-MB4-000	E11	93
90119-ME9-000	E12	95
90121-ME5-000	E12	95
90123-ME9-000	E7	85

© AMERICAN HONDA MOTOR CO., INC. 1993

Part Number Index

Part Number	Grid	Page
90124-ME9-000	E12	95
90127-393-000	F1	96
90130-MC7-000	E1	72
90133-MB0-000	E2	75
90133-286-000	F1	96
90134-371-000	E2	75
90142-ME5-000	E11	93
90145-KE8-000	D4	55
	D5	57
90145-KM3-750	D4	55
	D5	57
90145-MG5-670	D4	55
90145-VM0-000	D4	55
	D5	57
90145-961-010	D4	55
	D5	57
90151-MB1-000	D6	59
90152-MB0-000	D7	61
	F8	111
90152-ME5-000	D9	65
	F3	101
90153-MB0-000	D9	65
90153-MB0-405	D9	65
90154-ME9-000	D6	59
90157-MB1-000	D1	49
90157-MF5-000	E11	93
90164-460-840	D10	67
90170-MB0-000	E2	75
90180-MA5-771	D10	67
90201-MB0-770	B7	14
90201-415-000	F3	101
90208-438-000	B1	2
	D1	49
90210-438-000	B1	2
90241-MB0-000	C7	39
90242-MB0-000	C7	39
90302-ME5-000	F1	96
90303-428-900	D10	67
	E11	93
	F8	111
90304-425-000	D6	59
90305-MC0-003	E2	75
90305-428-900	F8	111
90308-357-000	F1	96
90309-315-000	F2	98
90313-567-000	F3	101
90324-MB0-700	E4	78
90354-ME5-000	F1	96
90380-ME9-000	F4	103
90381-MB0-010	E2	75
90401-ME9-009	D2	51
90403-ML4-610	B1	2
90403-413-000	B1	2
90403-413-010	B1	3
90407-MB0-000	C5	35
90409-952-000	C4	33
90432-MB0-000	B7	14
90432-MB0-010	B7	14
90439-463-000	F2	98
90441-MC0-000	B2	5
	C10	44
90441-ME9-000	B1	3
	C7	39
90441-706-000	B5	10
	B5	11
	C1	27
	C10	44
	C11	46
90443-KF9-900	C7	39
90443-379-690	C7	39
90451-426-000	C7	39
90452-ME9-000	C5	35
90452-323-000	B2	5
	B3	6
90452-371-000	C4	33
90454-428-000	C4	33
90459-438-000	C7	39
90461-MB0-770	B7	14
90461-286-000	C4	33
90462-MB0-770	B7	14
90462-323-000	C4	33
90471-580-000	E2	75
90487-MB0-000	B12	24
90501-425-000	F5	105
90503-425-000	D6	59
90505-425-000	F1	96
90521-292-000	F2	98
90543-273-000	D9	65
90544-283-000	D9	65
90545-300-000	B2	5
	C10	44
	D4	55
	D5	57
90581-ME9-000	C7	39
90601-KA5-000	C3	31
	C4	32
90601-MB0-770	B7	14
90601-MB0-771	B7	14
90601-300-000	C4	33
90602-463-000	C7	39
90646-657-000	E8	87
90651-MA5-671	D4	55
90651-377-003	D5	57
91008-KK6-000	B7	14
	C5	35
91008-300-008	C7	39
91008-362-000	B7	15
	C5	35
91010-HC0-003	B7	15
	C5	35
91011-MB0-003	C7	39
91011-MB0-004	C7	39
91012-MB0-003	C7	39
91021-415-005	B8	16
	B8	17
91024-MB0-003	B7	15
91024-MB0-004	B7	15
91051-MB0-005	E2	75
91052-MB0-003	E2	75
91052-MB0-005	E2	75
91061-MB0-005	E2	75
91062-MB0-003	E2	75
91062-MB0-005	E2	75
91062-MB0-013	E2	75
91066-415-003	F1	96
91066-415-004	F1	96
91066-415-005	F1	96
91066-415-006	F1	96
91202-MB0-000	B9	19
91204-MB0-000	C1	27
91204-MB0-003	C1	27
91204-MB0-013	C1	27
91204-425-003	B9	18
91205-MB0-000	C7	39
91205-MB0-771	C7	39
91205-MG7-003	C7	39
91252-MC7-003	D11	69
91254-463-003	D9	65
91258-410-003	D11	69
91258-410-006	D11	69
91258-410-013	D11	69
91261-MB0-003	E2	75
91261-MB0-005	E2	75
91261-ME9-005	F1	96
91262-ME9-003	E2	75
91262-ME9-005	E2	75
91265-MB0-003	E2	75
91266-ME5-003	F1	96
91301-027-000	D2	51
91301-200-000	C5	35
	C11	46
91301-250-000	B5	11
	C11	46
91302-MB0-013	B9	19
	C11	46
91302-001-020	E2	75
91302-377-000	B4	9
	C10	44
91302-567-003	B2	5
	B3	7
	C10	45
91303-MG7-003	B12	24

© AMERICAN HONDA MOTOR CO. INC. 1993

Part Number Index

Part Number	Grid	Page
91303-MG7-003	C1	27
	C11	47
91303-377-000	B12	24
	C1	27
	C11	47
91303-426-000	B12	24
	C1	27
	C11	47
91304-MG7-003	B2	5
	B3	7
	C10	45
91305-MG7-003	C1	27
	C11	47
91305-333-000	C1	27
	C11	47
91305-634-961	C7	39
91306-PJ4-000	D2	51
91307-MB0-003	C6	37
	C11	47
91307-422-000	C7	39
	C11	47
91307-425-003	B5	11
	C11	46
91308-MG7-003	B4	9
	C10	45
91308-PA9-003	B4	9
	B5	10
	C10	45
91309-MB0-003	B12	24
	C11	47
91309-425-003	B10	21
	C11	47
91310-MC7-003	D2	51
91310-MG7-003	C7	39
91312-MG7-003	B10	21
	C11	47
91313-MA6-005	C7	39
	C11	47
91313-MB0-003	B12	24
	C11	47
91313-MG7-004	B12	24
	C11	47
91314-MJ0-000	C7	39
91314-300-000	C7	39
91315-ME9-003	C6	37
	C11	47
91315-ME9-004	C6	37
	C11	47
91320-MB0-000	B10	21
91351-689-000	B2	5
	B3	7
	C1	27
	C10	45
	C11	46
91351-689-000	C11	47
91353-MB0-003	E2	75
91356-MA3-661	D9	65
91356-MB0-005	E2	75
91358-MB0-000	E1	72
91358-MC7-003	B5	11
	C11	47
91359-MB0-000	E2	75
91413-679-000	E4	78
91455-MB0-010	D6	59
	D9	65
92000-06008-0A	D9	65
92000-06012	E2	75
92000-06016-0A	E11	93
92000-06020	E10	90
92000-06020-0A	E10	90
92100-06016-0A	E11	93
92101-06008-0A	D9	65
	D10	66
92101-06012	E2	75
92101-06012-0A	E3	76
92101-06016-0A	E11	93
92101-06020-0A	E10	90
92300-06020-0A	E8	87
92500-06035-0G	E6	83
92700-08040-1B	D6	59
92700-10050-0E	E3	76
92900-08028-1B	D6	59
	D7	60
93200-10035-08	F2	98
93483-06012-07	F7	109
93491-06012-07	B2	5
	C6	37
93493-06010-07	F7	109
93500-03008-0H	E6	83
93500-04010-0H	C9	43
93500-04010-1B	D2	51
93500-04010-1H	C9	43
93500-05008-0A	B2	5
	B3	7
93500-05008-0H	D1	49
93500-05016-0B	D1	49
93500-05025-0G	B2	5
	B3	7
	E8	87
93500-06012-0A	E9	89
93500-06016	E9	89
93500-06016-0A	E9	89
93600-04012-0G	D4	55
	D5	57
93600-04012-1G	D4	55
	D5	57
93700-05020-0G	D2	51
93891-04012-07	E7	85
93891-05030-07	D3	53
93891-05035-07	D2	51
	D3	53
93891-05035-17	D2	51
	D3	53
93891-06012-08	D2	51
93892-04006-00	D3	53
	D4	54
93892-04014-10	C9	43
93893-04008-08	E4	78
93893-04010-07	D2	51
93893-04012-07	D5	57
93893-04012-08	D4	55
93893-04012-17	D5	57
93893-04012-18	D4	55
93893-06012-07	E7	85
93901-34320	F4	103
93901-34610	F4	103
93901-34710	F5	105
93901-42220	D2	51
94001-04000-0S	F5	105
94001-06000-0S	E10	91
94001-06200-0S	E10	91
94001-08000-0S	F1	96
94002-06000-0S	F5	105
94002-06080-0S	E6	83
94002-12000-0S	F2	99
94021-06070-0S	E6	83
94021-10020-0S	F2	99
	F3	100
94030-08000	C8	40
94030-08200	C8	40
94031-10070	E12	94
94050-06000	D4	55
	D5	57
	D6	58
	E9	89
	F3	101
94050-06080	D7	61
	E5	80
	E6	82
	F3	101
	F7	109
	F8	111
94050-08080	E11	93
	F3	101
94050-10080	F4	103
94050-12080	F4	103
	F5	104
94101-06000	E11	93
94101-06080	E11	93
94101-06800	E3	76
	E3	77
	E11	93

© AMERICAN HONDA MOTOR CO. INC. 1993

Part Number Index

Part Number	Grid	Page
94101-08000	E11	93
	F1	96
94102-10000	D10	67
94103-04000	F5	105
94109-14000	C1	27
	C11	47
	D1	48
94111-04800	C8	41
94111-05000	B11	22
	C8	41
	C9	42
	D1	49
	D2	50
94111-06700	D2	51
	D3	52
94111-06800	E6	83
94111-10000	F1	96
94201-16100	E11	93
94201-16150	E10	91
	E11	93
94201-16250	E10	91
	E11	93
94201-20180	F1	96
94201-20200	F1	97
94201-20220	F1	97
94201-20250	F1	97
94201-20320	F1	97
94201-20350	F1	97
94201-25200	D12	70
94201-25250	D12	70
94201-25300	D12	70
94201-29220	F1	97
94201-30500	E7	85
94301-08140	B6	12
	B6	13
	B9	18
	B10	20
	B12	24
94301-14200	B2	5
	B3	7
	C1	27
94305-30162	B12	24
94510-12000	C5	35
94591-27000	F7	109
94601-15000	B7	15
	B8	16
95001-55130-20	E7	85
95001-55190-20	E4	79
95002-01120	E4	79
	E7	85
95002-02070	C9	43
95002-02100	E7	85
95002-02130	E8	87
95002-70000	F7	109
95003-23010-31	E8	87
	E9	88
95005-70400-30	F7	109
95005-70800-30	F7	109
95011-61000	E9	89
95014-61100	F6	107
95014-61200	F6	107
95014-71702	E12	94
95014-72402	E12	94
95014-73100	E10	91
95015-32001	E10	91
95015-42000	E10	91
95015-83000	E11	93
	E12	94
95700-06010-00	D10	67
95700-06010-08	E7	85
	E9	89
	F6	107
	F8	111
95700-06012-07	F3	101
95700-06012-08	D8	62
	E7	85
95700-06014-08	B12	24
95700-06020	E10	91
95700-06020-00	B9	18
	E10	91
95700-06020-08	E4	79
	F5	105
95700-06025-08	F6	107
95700-06028-07	D4	55
95700-06032-07	B11	22
95700-06040-00	F7	109
95700-08022-00	E4	79
95700-08025-00	D12	71
95700-08032-00	F1	97
95700-08035-00	E9	89
95700-08045-07	C1	27
95700-08050-00	B1	3
95700-08080-07	C1	27
95700-08100-07	C1	27
95701-06010-00	D10	67
95701-06010-08	E7	85
	E9	89
	F6	107
	F8	111
	F9	112
95701-06012-07	F3	101
	F4	102
95701-06012-08	D8	62
	D8	63
	E7	85
	E8	86
95701-06014-08	B12	24
95701-06020-00	B9	18
95701-06020-00	E10	91
	E11	92
95701-06020-08	E4	79
	F5	105
	F6	106
95701-06025-08	F6	107
	F7	108
95701-06028-07	D4	55
	D5	56
95701-06032-07	B11	22
	B11	23
95701-06040-00	F7	109
	F8	110
95701-08022-00	E4	79
	E5	80
95701-08025-00	D12	71
95701-08032-00	F1	97
	F2	98
95701-08035-00	E9	89
	E10	90
95701-08045-07	C1	27
95701-08050-00	B1	3
	B2	4
95701-C8080-07	C1	27
95800-10035-08	E12	94
95800-10040-08	E12	94
95801-10040-08	E12	94
95900-06020-00	E10	91
96000-06012-00	B9	18
96000-06020-00	C6	37
96000-06025-00	B10	20
96000-06025-07	E12	94
96000-06032-00	B12	24
96000-06040-00	B9	18
	B12	25
96001-06012-00	B9	18
96001-06020-00	C6	37
	C7	38
96001-06025-00	B10	20
96001-06025-07	E12	94
	E12	95
96001-06032-00	B12	24
96001-06040-00	B9	18
	B9	19
	B12	25
	C1	26
96100-63040-00	C1	27
	C2	28
	C4	33
	C8	40
	C8	41
96100-63050-00	C4	33
	C5	34
96140-63020-10	D11	69

© AMERICAN HONDA MOTOR CO. INC. 1983

Part Number Index

Part Number	Grid	Page
96140-63030-10	E1	72
	E1	73
96150-63020-10	D11	69
	D12	70
96211-08000	D7	61
	D8	62
96222-30100	C5	35
	C6	36
96400-10040-08	E12	94
98069-57916	B2	5
	B3	7
98069-57926	B2	5
	B3	7
98069-58916	B2	5
	B3	7
98069-58926	B2	5
	B3	7
98069-59916	B2	5
	B3	7
98069-59926	B2	5
	B3	6
	B3	7
	B4	8
98200-31500	D2	51
98200-53000	E6	83
	E7	84
99001-08000	F9	112
99001-10120	F9	112
99001-14170	F9	112
99002-13500	F9	112
99003-10000	F9	112
99003-30000	F9	113
99003-50000	F9	113
99006-12000	F9	113
99006-22000	F9	113
99008-02000	F9	112
99101-393-1180	C9	43
99103-437-0400	C9	43
	C10	44

© AMERICAN HONDA MOTOR CO., INC. 1993

Part Number Index

Part Number	Grid	Page	Part Number	Grid	Page	Part Number	Grid	Page

© AMERICAN HONDA MOTOR CO., INC. 1993

Description Index

Description	Grid	Page	Ref. No.
(A)			
ADJUSTER COMP., HYDRAULIC LASHER	B4	9	13
ADJUSTER SPRING	F2	98	5
ALTERNATOR ASSY., FLYWHEEL TYPE A.C.	B8	17	7
ALTERNATOR ASSY., PULSE	B8	17	6
ARM B, GEARSHIFT	C5	35	13
ARM, RR BRAKE	D12	70	9
ARM, RR BRAKE STOPPER	E12	95	7
ARM, VALVE ROCKER	B4	9	12
AXLE, FR WHEEL	D11	68	3
AXLE, RR WHEEL	D12	70	1
(B)			
BAG, TOOL	F9	112	2
BAG, TOOL 200MM	F9	112	2
BALL, STEEL #8	D7	61	16
BAND ASSY., AIR CLEANER CONNECTING TUBE	E8	87	18
BAND A1, WIRE	F6	107	23
BAND A2, WIRE	F6	107	24
BAND B1, WIRE	D3	52	7
	F6	107	18
BAND, AIR CLEANER	E8	87	16
BAND, FUEL TUBE	E3	77	5
BAND, INSULATOR	B2	4	12
	B3	6	11
BAND, L MUFFLER	E9	88	6
BAND, R MUFFLER	E9	88	5
BAR ASSY., SIDE STAND	E12	94	3
BAR COMP., L STEP	E11	92	12
BAR COMP., R STEP	E11	92	3
BAR, L PILLION STEP	E11	93	17
BAR, R PILLION STEP	E11	92	16
BASE	E6	83	9
BASE COMP.	F5	104	8
BASE COMP., CONTACT	D6	58	3
BASE COMP., TAILLIGHT	F5	104	3
BASE, EMBLEM	B8	17	2
BASE, TURN SIGNAL	F4	102	2
BATTERY	E7	84	14
BEARING A, MAIN	C3	31	9
BEARING B, MAIN	C3	31	9
BEARING C, MAIN	C3	31	9
BEARING D, CONNECTING ROD	C3	31	7
BEARING E, CONNECTING ROD	C3	31	7
BEARING F, CONNECTING ROD	C3	31	7
BEARING, BALL 5206	C7	39	26
BEARING, BALL 6303	C7	39	27
BEARING, NEEDLE 19/16	E2	75	30
BEARING, NEEDLE 32MM	B8	16	6
BEARING, NEEDLE 35X42X30	B7	15	25
BEARING, RADIAL BALL 16003	B7	14	24
	C5	35	24
BEARING, RADIAL BALL 16012C3	E2	75	27
BEARING, RADIAL BALL 5206	C7	39	28
BEARING, RADIAL BALL 57/34C3	E2	75	28
BEARING, RADIAL BALL 6302U	D11	69	17
BEARING, RADIAL BALL 6302UU	D11	69	17
BEARING, RADIAL BALL 6303U	E1	72	9
BEARING, RADIAL BALL 6304	C1	27	31
	C4	33	29
	C8	40	34
BEARING, RADIAL BALL 6305	C4	33	30
	E2	75	29
BEARING, 30202	F1	96	21
BODY, R CALIPER	D10	67	15
BOLT ASSY., FR FORK	D9	64	17
BOLT COMP., OIL CONTROL	B2	5	14
BOLT-WASHER 6X10	F7	109	28
BOLT-WASHER 6X12	B2	5	21
	C6	37	22
	F7	109	27
BOLT, CAP 6X35	E6	83	19
BOLT, CONNECTING ROD	C2	29	6
BOLT, ENGINE HANGER 8X55	F8	110	13
BOLT, FLANGE 10X105	F8	111	14
BOLT, FLANGE 10X246	F8	110	11
BOLT, FLANGE 10X35	E12	94	11
BOLT, FLANGE 10X38	E2	75	22
BOLT, FLANGE 10X40	E12	94	11
BOLT, FLANGE 12X215	F8	110	12
BOLT, FLANGE 12X40	B9	18	15
BOLT, FLANGE 12X45	B9	18	15
BOLT, FLANGE 6MM	F7	109	25
	F7	109	26
BOLT, FLANGE 6X10	D10	67	21
	D10	67	26
	E7	85	30
	E9	89	20
	F6	107	25
	F8	111	19
BOLT, FLANGE 6X12	B9	18	22
	D8	62	2
	E7	85	31
	F3	101	30
BOLT, FLANGE 6X14	B12	24	18
BOLT, FLANGE 6X18	B1	2	8
BOLT, FLANGE 6X20	B9	18	21
	C6	37	23
	E4	79	23
	E10	91	18
	E10	91	19
	F5	105	23
BOLT, FLANGE 6X25	B10	20	15
	E12	94	12

© AMERICAN HONDA MOTOR CO., INC. 1993

Description Index

Description	Grid	Page	Ref. No.
BOLT, FLANGE, 6X25	F6	107	26
BOLT, FLANGE, 6X28	D4	55	23
BOLT, FLANGE, 6X32	B11	22	15
	B12	24	19
	C5	35	18
BOLT, FLANGE, 6X40	B9	18	23
	B12	25	20
	F7	109	34
BOLT, FLANGE, 6X75	B12	24	11
BOLT, FLANGE, 8X100	C1	27	30
BOLT, FLANGE, 8X120	C1	27	13
BOLT, FLANGE, 8X135	C1	27	14
BOLT, FLANGE, 8X145	B1	2	9
BOLT, FLANGE, 8X19	D6	59	13
BOLT, FLANGE, 8X22	E4	79	24
BOLT, FLANGE 8X25	D12	71	13
BOLT, FLANGE, 8X27	E2	75	21
BOLT, FLANGE, 8X32	F1	97	28
BOLT, FLANGE, 8X35	E9	89	21
BOLT, FLANGE, 8X36	E4	78	17
BOLT, FLANGE, 8X45	C1	27	28
BOLT, FLANGE, 8X48	D10	67	23
BOLT, FLANGE, 8X50	B1	3	15
BOLT, FLANGE, 8X55	B1	2	10
BOLT, FLANGE, 8X80	C1	27	29
BOLT, FR. DISK, 8X57	D11	69	14
BOLT, FR. DISK, 8X59	D11	69	14
BOLT, GEARSHIFT DRUM STOPPER ARM PIVOT	C5	35	20
BOLT, HEX.	C8	41	4
BOLT, HEX, 10X35	F2	98	16
BOLT, HEX, 6X12	E2	75	37
BOLT, HEX, 6X16	E2	75	23
	E11	93	23
BOLT, HEX, 6X20	E10	90	12
BOLT, HEX, 6X8	D9	65	31
BOLT, L. RR. SWINGARM PIVOT	E12	95	14
BOLT, OIL, 10X22	D4	55	16
	D5	57	14
BOLT, OIL, 10X34	D4	55	17
BOLT, ORIFICE, 1.6MM	C1	27	12
BOLT, PLUG, 14MM	C1	27	20
BOLT, R. CONTROL LEVER PIVOT	D4	55	14
	D5	57	12
BOLT, R. RR. SWINGARM PIVOT	E12	95	13
BOLT, RR. BRAKE STOPPER	F1	96	15
BOLT, RR. BRAKE STOPPER ARM	F1	96	16
BOLT, SEALING, 8MM	E2	75	20
BOLT, SETTING	B10	21	4
BOLT, SIDE STAND PIVOT	E12	94	7
BOLT, SLOT, 6X20	E8	87	28
BOLT, SOCKET	D1	49	14
BOLT, SOCKET, 10X20	F8	110	10
BOLT, SOCKET, 10X30	D7	61	14
BOLT, SOCKET, 10X30	F8	111	15
BOLT, SOCKET, 10X40	D10	67	22
BOLT, SOCKET, 4X10	B9	18	16
BOLT, SOCKET, 6X15	B9	19	10
BOLT, SOCKET, 6X20	B5	11	8
	D2	51	23
BOLT, SOCKET, 6X23	D4	55	15
	D5	57	13
BOLT, SOCKET, 6X25	B9	19	11
BOLT, SOCKET, 6X35	B9	18	17
	E12	95	12
BOLT, SOCKET, 6X38	B5	11	9
BOLT, SOCKET, 6X50	B5	11	10
	B9	18	18
BOLT, SOCKET, 7X32	D6	59	14
BOLT, SOCKET, 8MM	B9	18	14
	D9	64	23
	F3	101	24
BOLT, SOCKET, 8X105	C1	27	19
BOLT, SOCKET, 8X120	C1	27	18
BOLT, SOCKET, 8X17	D9	65	25
BOLT, SOCKET, 8X18	D1	49	14
BOLT, SOCKET, 8X20	E11	93	21
BOLT, SOCKET, 8X22	C7	39	15
	E11	93	20
	E11	93	21
BOLT, SOCKET, 8X28	D9	65	24
	F3	101	25
BOLT, SOCKET, 8X32	D6	59	15
BOLT, SPECIAL, 10MM	C4	33	22
	C7	39	14
BOLT, SPECIAL, 6X26	B5	10	6
BOLT, SPECIAL, 6X49	B2	5	15
BOLT, SPECIAL, 6X8	F4	103	19
BOLT, SPECIAL, 7X18	C5	35	21
BOLT, SPECIAL, 8MM	C6	37	12
BOLT, STUD, 10X255	C1	27	17
BOLT, STUD, 10X264	C1	27	16
BOLT, STUD, 10X50	E3	76	38
BOLT, STUD, 2.6X60	D6	59	19
BOLT, STUD, 6X28	B2	5	13
	B3	6	12
BOLT, STUD, 8X115	C7	39	16
BOLT, STUD, 8X146	C7	39	17
BOLT, STUD, 8X252	C1	27	15
BOLT, STUD, 8X40	D6	59	19
BOLT, TOOL CASE HOLDER SETTING	F3	101	23
BOLT, UBS, 10X34	E1	72	7
BOLT, UBS, 12X28	C3	31	12
BOLT, UBS, 7X15	B5	10	7
BOOT, BOLT	D10	66	13
BOOT, JOINT	E12	95	4
BOOT, MASTER CYLINDER	D4	55	11
	D5	57	10

© AMERICAN HONDA MOTOR CO., INC. 1993

Description Index

Description	Grid	Page	Ref. No.
BOOT, PIN	D10	66	12
BOSS, OIL FILTER	B12	24	10
BOX ASSY., JOINT	D2	50	1
BOX ASSY., SPEEDOMETER GEAR	D11	68	9
BOX, BATTERY	E7	85	19
BOX, MAIN FUSE	E6	83	7
BRACKET COMP., L. STEP	E11	92	10
BRACKET COMP., R. STEP	E11	92	4
BRACKET, IGNITION COIL	F6	106	4
BRACKET, L.	D10	66	9
BRACKET, L. EX. CHAMBER	E9	89	15
BRACKET, NUMBER PLATE	F5	105	16
BRACKET, R.	D10	67	17
BRACKET, R. EX. CHAMBER	E9	89	14
BRACKET, SIDE STAND RUBBER	E12	94	6
BRACKET, WATER PIPE	C6	37	15
BRAKE PAD KIT	D10	67	NI
BRAKE SHOE KIT	D12	71	NI
BRAKE SHOE SET	D12	71	NI
BREATHER ASSY.	E1	73	5
BRIDGE, FORK TOP	D6	59	11
BULB	F5	105	14
BULB, HEADLIGHT	D1	48	10
BULB, LICENSE LIGHT	F5	105	14
BULB, TAILLIGHT	F5	105	15
BULB, TURN SIGNAL	F4	103	16
	F4	103	17
BULB, WEDGE BASE 12V3W	D2	50	4
BULB, 12V60 55W H4	D1	48	10
BUSH	D5	56	4
BUSH, FORK PIPE	D8	63	8
BUSH, UPPER RUBBER	F2	98	10

(C)

Description	Grid	Page	Ref. No.
CABLE ASSY., SPEEDOMETER	D2	51	20
CABLE, CHOKE 6MM	D3	52	4
CABLE COMP. A, THROTTLE	D3	52	2
CABLE COMP. B, THROTTLE	D3	52	3
CABLE COMP., CHOKE	D3	52	4
CABLE COMP., RR. BRAKE	E10	90	6
CABLE COMP., RR. STOP	E10	90	4
CABLE, BATTERY GROUND	B10	21	10
CABLE, INNER	D2	51	21
CABLE, SPEEDOMETER INNER	D2	51	21
CABLE, STARTER BATTERY	E6	83	2
CABLE, STARTING MOTOR	B10	21	8
CALIPER ASSY., L. FR.	D10	66	2
CALIPER ASSY., R. FR.	D10	67	14
CALIPER COMP., L. FR.	D10	66	3
CAM, RR. BRAKE	D12	70	7
CAM, GEARSHIFT	C5	34	7
CAMSHAFT A	B4	8	2
CAMSHAFT B	B4	8	3
CAP	C9	43	11
	D4	54	8
	D5	56	8
CAP ASSY. 1, NOISE SUPPRESSOR	F6	106	6
CAP ASSY. 2, NOISE SUPPRESSOR	F6	106	7
CAP COMP., FUEL FILLER	E4	78	13
CAP COMP., RADIATOR	F7	108	2
CAP, AIR CLEANER ELEMENT	E8	86	3
CAP, AIR VALVE	D9	64	18
CAP, BLEEDER SCREW	B9	19	9
CAP, BLEEDER VALVE	D10	66	7
CAP, BREATHER	E1	73	5
CAP, CABLE SEALING	C9	43	14
CAP, FR. ENGINE HANGER	F4	103	18
	F8	110	5
CAP, FUEL COCK	E7	84	6
CAP, GRIP RUBBER	D3	53	13
CAP, R. LOCK NUT	F1	96	17
CAP, RESERVE TANK	F7	108	12
CAP, SCREW	F6	106	1
CAP, SOCKET BOLT, 8MM	D6	59	18
	D9	65	30
CAP, SPARK PLUG	F6	106	7
CAP, TAPPET ADJUSTING HOLE	E1	73	1
CAP, 22MM	B4	9	22
CAP, 45MM	B5	11	11
CARBURETOR ASSY.	C8	41	7
CARBURETOR ASSY. 1	C8	41	8
CARBURETOR ASSY. 2	C8	41	9
CARTRIDGE, OIL FILTER	B11	23	8
CASE ASSY., SIDE GEAR	C7	38	1
CASE COMP., AIR CLEANER	E8	86	1
CASE COMP., L. LOWER	D9	64	21
CASE COMP., R. LOWER	D8	63	10
CASE COMP., SIDE GEAR	C7	38	2
CASE, FINAL GEAR	E1	73	3
CASE, HEADLIGHT	D1	49	11
CASE, SPEEDOMETER UNDER	D2	50	9
CASE, TACHOMETER LOWER	D2	50	14
CASE, THERMOSTAT	C6	36	3
CASE, TOOL	F3	101	19
CASE, UPPER	F2	98	7
CENTER A, CLUTCH	B6	13	5
CENTER B, CLUTCH	B6	13	6
CHAIN, CAM	B5	10	2
CHAIN, OIL PUMP	B11	23	6
CHAMBER COMP., EX.	E9	88	3
CHAMBER SET, FLOAT	C9	42	4
CHAMBER, AIR CLEANER	E8	87	15
CHECK UNIT, PILOT LAMP	E7	85	18
CIRCLIP	D4	55	19
CIRCLIP, EXTERNAL, 12MM	C5	35	26
CIRCLIP, EXTERNAL, 28MM	C7	39	25

© AMERICAN HONDA MOTOR CO., INC. 1983

Description Index

Description	Grid	Page	Ref. No.
CIRCLIP, INTERNAL	D9	64	16
CIRCLIP, INTERNAL 18MM	D5	57	16
CIRCLIP, INTERNAL 95	B7	14	23
CIRCLIP, 25MM	C4	33	28
CLAMP, ALTERNATOR CORD	B8	17	10
CLAMP, PULSE	B8	17	11
	B8	17	12
	B8	17	13
CLAMP, SPEEDOMETER CABLE	D10	66	1
CLAMP, SPEEDOMETER SENSOR CORD	E10	90	11
	F6	107	22
CLAMP, WATER HOSE	C6	36	8
	F7	109	19
CLIP A12, TUBE	E4	79	22
	E7	85	28
CLIP B, HOSE	C6	37	14
CLIP, AIR HOSE 16	E8	87	27
CLIP, FUEL HOSE	E3	77	1
	E7	84	9
CLIP, HIGH TENSION CORD	F6	107	19
	F6	107	21
CLIP, HIGH TENSION WIRE	F6	107	20
CLIP, PISTON PIN 1.2X20	C3	31	13
CLIP, PISTON PIN 15MM	B7	15	26
CLIP, SUB TANK HOSE	E8	87	25
CLIP, TUBE B10	E7	85	29
CLIP, TUBE B12.5	E8	87	30
CLIP, TUBE B7	C9	43	19
CLIP, TUBE C11	F7	109	31
CLIP, WIRE HARNESS	F6	107	17
CLIP, WIRE 2X7.8	F7	109	30
CLIP 2X7.0	E4	78	19
CLUTCH MASTER CYLINDER	D5	56	2
CLUTCH, ONE WAY	B7	14	15
CLUTCH, STARTER ONE WAY	B8	17	5
CLUTCH, STARTING ONE WAY	B8	17	5
COIL COMP., IGNITION	F6	106	5
COLLAR B, RR. DISTANCE	E2	75	19
COLLAR COMP., FR. AXLE DISTANCE	D11	68	5
COLLAR, FR. FENDER	E4	78	15
COLLAR, FR. WHEEL SIDE	D11	68	4
COLLAR, FUEL COCK CAP	E7	85	23
COLLAR, FUEL TANK SETTING	E4	78	18
COLLAR, L. FR. ENGINE UPPER	F8	110	4
COLLAR, MAIN STAND	E12	94	2
COLLAR, METER SETTING	D2	50	11
COLLAR, O-RING	B11	23	5
	C1	26	5
COLLAR, R. FR. ENGINE UPPER	F8	110	3
COLLAR, RADIATOR MOUNTING	F7	109	15
COLLAR, RR. AXLE DISTANCE	E1	72	2
COLLAR, RR. FENDER	E4	78	15
COLLAR, RR. SHOCK ABSORBER	F2	98	9
COLLAR, RR. WHEEL SIDE	D12	70	2
COLLAR, SPLINE 25X12.5	C4	33	17
COLLAR, SPLINE 25X28X10.8	C4	32	5
COLLAR, SPLINE 25X9.5	C4	32	8
COLLAR, SPRING	D8	63	3
COLLAR, STAND RUBBER SETTING	E12	94	5
COLLAR, TANK FR. MOUNTING	E4	78	11
COLLAR, 20X24X18.5	C7	39	13
COLLAR, 25X10	C4	32	10
COLLAR, 25X12	C4	33	14
COLLAR, 6.2X12	F5	105	18
CORD COMP., R. TURN SIGNAL	F4	102	5
COTTER, VALVE	B4	9	21
COUNTERSHAFT, TRANSMISSION	C4	32	3
COVER	E6	83	8
COVER A, CAM CHAIN	B1	2	3
COVER B, CAM CHAIN	B1	2	7
COVER B, MAGNETIC SWITCH	B10	21	9
	E6	83	4
COVER COMP. A, TAPPET	B1	2	5
COVER COMP. B, TAPPET	B1	2	6
COVER COMP., CYLINDER HEAD	B1	2	2
COVER COMP., LICENSE	F5	105	12
COVER SET, L. SIDE	E6	83	16
COVER SET, R. SIDE	E6	83	13
COVER, BATTERY	E6	83	3
COVER, CARBURETOR	D3	52	1
COVER, CLUTCH	B5	11	4
COVER, COMBINATION SWITCH	D6	58	4
COVER, FUEL PUMP	E7	84	3
COVER, GEAR CASE	E1	73	7
COVER, INDICATOR	D2	51	17
COVER, JOINT BOX	D2	50	2
COVER, L. CRANKCASE	B8	17	1
COVER, L. FR. SIDE	F8	110	9
COVER, L. RR.	E12	95	1
COVER, LOWER	D7	61	12
COVER, R. CRANKCASE	B5	11	1
COVER, R. FR. SIDE	F8	110	8
COVER, RADIATOR	F7	108	6
COVER, RUBBER	D1	48	9
COVER, SPEEDOMETER STAY	D2	50	8
COVER, STARTING MOTOR TERMINAL	B10	21	7
COVER, STEP	E11	92	11
COVER, TACHOMETER STAY	D2	50	13
COVER, THERMOSTAT	C6	36	4
COVER, WATER PUMP	B9	19	3
COVER, WIRE HARNESS CONNECTOR	F6	107	15
CRANKCASE COMP., L.	C1	26	3
CRANKCASE COMP., R.	C1	26	1
CRANKSHAFT COMP.	C3	31	8
CUP, PISTON	B10	20	NI
CUSHION	F3	100	5
CUSHION, FUEL TANK RR.	E4	78	12
CUSHION, RADIATOR	F7	108	13

© AMERICAN HONDA MOTOR CO., INC. 1983

Description Index

Description	Grid	Page	Ref. No.
CUSHION, SUB TANK	E3	77	9
CYLINDER ASSY., CLUTCH MASTER	D5	56	2
CYLINDER ASSY., CLUTCH SLAVE	B9	19	5
CYLINDER ASSY., FR. BRAKE MASTER	D4	54	6
CYLINDER COMP. A	B2	4	1
CYLINDER COMP. B	B3	6	1
CYLINDER SET, MASTER	D4	55	12
(D)			
DAMPER COMP., RR.	F2	98	4
DIAPHRAGM	D4	54	10
	D5	57	9
DISK A, CLUTCH FRICTION	B6	13	10
DISK, CLUTCH FRICTION	B6	13	9
	B6	13	10
DISK, FR. BRAKE	D11	69	13
DRIVER 1, PLUS SCREW	F9	112	15
DRIVER 3, MINUS SCREW	F9	113	16
DRUM, GEARSHIFT	C5	34	5
DUST SEAL	D9	65	28
	D10	66	8
DUST SEAL, BRAKE CAM	D12	70	6
DUST SEAL, STEERING HEAD	D7	60	8
DUST SEAL, 40X50X5	D11	69	16
(E)			
ELEMENT, AIR CLEANER	E8	86	5
EMBLEM, L. FUEL TANK	E3	77	7
EMBLEM, R. FUEL TANK	E3	77	6
EMBLEM, RR. FENDER	F3	101	13
EMBLEM, SIDE COVER	E6	83	17
(F)			
FAN COMP., COOLING	F7	108	4
FENDER A, RR.	F3	101	12
FENDER B, RR.	F3	101	14
FENDER, FR.	D8	62	1
FILTER, OIL	B11	23	8
FLANGE, FINAL DRIVEN	E1	72	1
FLOAT SET	C9	42	3
FLYWHEEL COMP.	B8	17	8
FORK ASSY., L. FR.	D9	64	20
FORK ASSY., R. FR.	D8	63	1
FORK, CENTER GEARSHIFT	C5	34	2
FORK, L. GEARSHIFT	C5	34	3
FORK, R. GEARSHIFT	C5	34	1
FRAME COMP.	F8	110	1
FUSE B	D2	51	19
FUSE F	E6	83	24
FUSE, BLADE	D2	51	19
(G)			
GASKET KIT A	C10	44	
GASKET KIT B	C11	46	
GASKET SET	C9	42	1
GASKET, CAM CHAIN COVEER	B1	2	4
	C10	44	5
GASKET, CAM CHAIN COVER	B1	2	4
	C10	44	5
GASKET, CLUTCH COVER	B5	11	5
	C11	46	1
GASKET, CYLINDER	B2	4	2
	B3	6	2
	C10	44	1
GASKET, CYLINDER HEAD	B2	4	9
	B3	6	8
	C10	44	4
GASKET, EX. PIPE	C10	44	6
	E9	88	1
GASKET, FINAL DRIVESHAFT BEARING HOLDER	C7	38	5
	C11	46	6
GASKET, FR. FORK DRAIN VALVE	D9	65	26
GASKET, L. COVER	B8	17	3
	C11	46	3
GASKET, LENS	F4	102	6
	F5	105	13
GASKET, LICENSE LIGHT	F5	104	9
GASKET, MUFFLER	E9	88	7
GASKET, OIL STRAINER	B11	23	4
	C11	46	4
GASKET, R. COVER	B5	11	6
	C11	46	2
GASKET, TAILLIGHT	F5	104	5
GASKET, TAILLIGHT BASE	F5	104	6
GASKET, TAPPET COVER	B1	2	1
	C10	44	3
GASKET, WATER PUMP COVER	B9	19	4
	C11	46	5
GAUGE, AIR PRESSURE	F9	112	10
GAUGE, FEELER, 0.7	F9	112	3
GAUGE, OIL LEVEL	B5	11	7
GEAR A, STARTER REDUCTION	B8	16	2
GEAR ASSY., FINAL	E1	73	2
GEAR COMP., STARTING DRIVEN	B8	16	5
GEAR SET, FINAL	E1	73	6
GEAR, COUNTERSHAFT FIFTH	C4	33	15
GEAR, COUNTERSHAFT FIRST	C4	32	4
GEAR, COUNTERSHAFT FOURTH	C4	32	12
GEAR, COUNTERSHAFT SECOND	C4	32	7

© AMERICAN HONDA MOTOR CO., INC. 1983

Description Index

Description	Grid	Page	Ref. No.
GEAR, COUNTERSHAFT SIXTH	C4	33	18
GEAR, COUNTERSHAFT THIRD	C4	32	9
GEAR, DAMPER SHAFT	C7	39	11
GEAR, FINAL DRIVE	C4	33	19
GEAR, MAINSHAFT FIFTH	C4	32	13
GEAR, MAINSHAFT FOURTH	C4	32	11
GEAR, MAINSHAFT SECOND & THIRD	C4	32	6
GEAR, MAINSHAFT SIXTH	C4	33	16
GEAR, PRIMARY DRIVE	B7	14	18
GEAR, SPEEDOMETER	D11	68	10
GEAR, STARTER	B8	16	4
GRIP	F9	113	17
GRIP, L. HANDLEBAR	D3	53	12
GRIP, R. HANDLEBAR	D3	53	11
GROMMET, AIR CLEANER CASE	D7	61	13
	E6	83	15
GROMMET, AIR CLEANER ELEMENT	E8	86	9
GROMMET, METER SETTING	D2	50	10
GROMMET, SIDE COVER	E6	83	14
GROMMET, STORAGE TANK	E8	87	24
GROMMET, TUBE	E8	86	13
GUARD, RADIATOR LOWER HOSE	F7	109	18
GUARD, WIRE HARNESS	F6	107	16
GUIDE, CAM CHAIN	B5	10	5
GUIDE, CLUTCH OUTER	B6	13	3
GUIDE, EX. VALVE	B2	4	8
	B3	6	7
GUIDE, IN. VALVE	B2	4	8
	B3	6	7
GUIDE, IN. VALVE	B2	4	7
	B3	6	6
GUIDE, LIFTER ROD	C1	26	6
GUIDE, RR. BRAKE CABLE	B5	11	2
GUIDE, SPRING	F2	98	8
(H)			
HANDLE, EYE WRENCH, 120MM	F9	113	18
HANDLEBAR	D6	58	6
HANDLEBAR, COMP., R.	D4	55	13
HANGER, STRAGE TANK	E8	86	11
HARNESS A, SUB WIRE	C1	26	9
HARNESS D, SUB WIRE	F6	107	14
HARNESS E, SUB WIRE	F7	109	20
HARNESS, WIRE	F6	107	13
HEAD COMP., CYLINDER	B2	4	3
	B3	6	3
HEADLIGHT ASSY	D1	48	1
HEADLIGHT UNIT	D1	48	7
HOLDER	F4	102	7
HOLDER ASSY., HELMET	F8	110	7
HOLDER SET, BRUSH	B10	21	5
HOLDER, CHOKE LEVER	D5	56	1
HOLDER, CROSS SHAFT BEARING	C7	38	7
HOLDER, ELEMENT	E8	86	6
HOLDER, FINAL DRIVESHAFT BEARING	C7	38	4
HOLDER, GEARSHIFT DRUM	C5	34	6
HOLDER, HANDLE UPPER	D6	59	10
HOLDER, L. PILLION STEP	E11	92	15
HOLDER, MASTER CYLINDER	D4	54	9
HOLDER, NEEDLE JET	C9	43	16
HOLDER, O-RING	E2	74	13
HOLDER, R. PILLION STEP	E11	92	14
HOLDER, TOOL CASE	F3	101	20
HOOK, STORAGE TANK	E8	86	10
HORN ASSY	D7	60	1
	D7	60	2
HOSE A, WATER OUTLET	C6	37	16
HOSE B, JOINT WATER	C6	36	9
HOSE B, WATER OUTLET	C6	37	17
HOSE, FILLER NECK	F7	109	17
HOSE, FR. BRAKE	D4	54	4
HOSE, L. FR. BRAKE	D4	54	2
HOSE, R. FR. BRAKE	D4	54	3
HOSE, RADIATOR LOWER	F7	109	16
HOSE, RADIATOR UPPER	C6	36	1
(I)			
INDICATOR ASSY	D2	51	15
INDICATOR COMP	D2	51	16
INDICTOR, RR. BRAKE	D12	70	8
INNER, ONE WAY CLUTCH	B6	13	7
INSULATOR, CARBURETOR	B2	4	11
	B3	6	10
INSULATOR, CLUTCH SLAVE CYLINDER	B9	19	6
	C11	46	7
(J)			
JET, MAIN, #118	C9	43	20
JET, OIL	C1	26	2
JET, SLOW, #40	C9	43	21
JOINT B, BRAKE ARM	E10	91	16
JOINT COMP., UPPER	F2	98	3
JOINT COMP., YOKE	E12	95	2
JOINT SET	C8	41	1
JOINT, BREATHER TUBE	E8	87	21
	E8	87	23
	F7	108	1
JOINT, PINION	E2	74	12
JOINT, WATER HOSE	C6	36	7
JOINT, 2-WAY	D4	54	5

© AMERICAN HONDA MOTOR CO., INC. 1993

Description Index

Description	Grid	Page	Ref. No.
(K)			
KEY SET	D6	58	1
KEY, BLANK	D6	58	5
(L)			
LABEL, BREAK-IN CAUTION	D2	51	22
LABEL, FR. FORK CAUTION	D6	59	12
LABEL, HELMET HOLDER	F3	101	17
LABEL, RESERVE TANK	F7	109	23
LENS COMP., TAILLIGHT	F5	104	2
LENS, LICENSE	F5	104	10
LENS, TURN SIGNAL	F4	102	3
LEVER COMP., L. HANDLE	D5	57	11
LEVER, CHOKE	D3	52	5
LEVER, R. HANDLEBAR	D4	55	13
LIFTER, DAMPER	C7	39	10
LIGHT ASSY., LICENSE	F5	104	7
LOCK, BEARING ADJUSTING	E1	73	10
	E1	73	11
LOCK, FILLER LID	F3	100	7
(M)			
MAINSHAFT, TRANSMISSION	C4	32	1
MARK, ACCESSORIES & LOADING CAUTION	F3	101	18
MARK, BATTERY CAUTION	E6	83	18
MARK, DRIVE CAUTION	E4	78	16
MARK, RADIATOR CAUTION	F7	109	24
MARK, TIRE CAUTION	E12	95	11
MIRROR, L.	D3	53	15
MIRROR, R.	D3	53	14
MOTOR ASSY., STARTER	B10	21	1
MOTOR ASSY., STARTING	B10	21	1
MOTOR, FAN	F7	108	5
(N)			
NECK ASSY., FILLER	F7	108	7
NEEDLE, JET	C9	43	15
NUT B, BRAKE ROD ADJUSTING	E10	91	17
NUT-WASHER 6 MM	B10	21	11
NUT, BEAM ADJUSTING	D1	48	5
NUT, CAP, 10MM	F2	99	18
NUT, CAP, 6MM	E6	83	22
	F3	101	26
NUT, CAP, 8MM	C7	39	21
NUT, CONNECTING ROD	C2	29	4
NUT, FLANGE CAP, 10MM	B1	2	12
NUT, FLANGE CAP, 8MM	B1	2	11
NUT, FLANGE CAP, 8MM	D1	49	15
NUT, FLANGE, 10MM	D10	67	24
	E11	93	22
	F4	103	22
	F8	111	16
NUT, FLANGE, 12MM	F4	103	23
	F8	111	17
NUT, FLANGE, 6MM	D4	55	22
	D5	57	19
	D7	61	15
	E5	80	3
	E9	89	18
	F3	101	26
	F3	101	28
	F7	109	29
	F8	111	18
NUT, FLANGE, 8MM	E11	93	24
	F3	101	29
NUT, HEX, 10MM	E12	94	8
	F1	96	18
NUT, HEX, 12MM	F2	99	17
NUT, HEX, 16MM	E2	75	25
NUT, HEX, 4MM	F5	105	20
NUT, HEX, 6MM	E6	83	21
	E10	91	13
	F5	105	21
NUT, HEX, 8MM	C8	40	33
	F1	96	24
NUT, LOCK, 22MM	B7	14	19
NUT, LOCK, 23MM	F1	96	19
NUT, LOCK, 30MM	C7	39	18
NUT, LOCK, 64MM	C7	39	19
NUT, RR. AXLE U, 16MM	E2	75	24
NUT, RR. SHOCK ABSORBER UPPER	F2	98	13
NUT, SPEED, 3MM	F3	101	27
NUT, STEERING STEM	D6	59	16
NUT, UNIT HOLDER	D1	48	8
(O)			
O-RING	B10	21	13
O-RING B, 6.8X1.9	D2	51	25
O-RING, 10X1.6	C5	35	25
	C11	46	9
O-RING, 13.8X2.5	B12	24	13
	C1	27	23
	C11	47	12
O-RING, 14.6X3.7	B12	24	14
	C11	47	16
O-RING, 14.7X2.2	B12	24	15
	C11	47	18
O-RING, 14.8X2.2	B12	24	15
	C11	47	18

 © AMERICAN HONDA MOTOR CO., INC. 1993

Description Index

Description	Grid	Page	Ref. No.
O-RING, 15X2.5	B4	9	23
	C10	44	10
O-RING, 19.8x1.9	B4	9	24
	C10	45	12
O-RING, 19.8X1.9	B4	9	24
	C10	45	12
O-RING, 22X3.0	B5	11	12
	C11	46	10
O-RING, 24.4X3.1	B10	21	12
	C11	47	17
O-RING, 27.4X2.4	B2	5	19
	B3	7	14
	C10	45	11
O-RING, 29.2X3.5	D9	65	29
O-RING, 3X70	C7	39	32
O-RING, 30.8MM	E2	75	34
O-RING, 32.95X2.62	B9	19	13
	C11	46	11
O-RING, 35.2X2.4	E2	75	35
O-RING, 35X3	B2	5	20
	B3	7	15
	C1	27	25
	C10	45	13
	C11	47	20
O-RING, 4.8X1.9	C7	39	31
	C11	47	15
O-RING, 4.9X1.9	C7	39	31
	C11	47	15
O-RING, 41.5X2	B5	11	13
	C11	47	21
O-RING, 46X5X3.5	E1	72	8
O-RING, 5X1.7	C1	27	24
	C11	47	13
O-RING, 58.5X3.5	E2	75	36
O-RING, 58X2	C6	37	20
	C11	47	14
O-RING, 6.8X1.9	D2	51	25
O-RING, 64.5X3	C7	39	30
O-RING, 70X3	C7	39	32
OIL SEAL, 12.5X25X8	B9	18	19
OIL SEAL, 20X35X5	F1	96	23
OIL SEAL, 25X66X8.5	C7	39	29
OIL SEAL, 27X43X7	F1	96	22
OIL SEAL, 34X50X7	E2	75	31
OIL SEAL, 39X51X7	E2	75	2
OIL SEAL, 60X80X8	E2	75	33
OIL SEAL, 8X18X5	B9	19	12
OIL SEAL, 8X25X8	C1	27	22
ORIFICE, SIDE GEAR CASE	C7	38	3
OUTER COMP., CLUTCH	B6	13	2
OUTER COMP., STARTING CLUTCH	B8	17	4

Description	Grid	Page	Ref. No.
(P)			
PAD COMP	D10	66	4
PANEL COMP., RR	D12	70	3
PEDAL COMP., RR BRAKE	E10	90	8
PEDAL, GEAR CHANGE	E10	90	1
PIECE, CLUTCH JOINT	B7	14	14
PIECE, OIL LOCKING	D8	63	11
PIN A, DOWEL, 14X20	B2	5	24
	B3	7	18
	C1	27	27
PIN A, DOWEL, 8X14	B6	12	14
	B9	18	20
	B10	20	14
	B12	24	16
PIN C, PILLION STEP	E11	93	29
PIN, BOLT	D10	66	11
PIN, BRAKE CABLE JOINT	E10	90	7
PIN, COTTER, 2.0X22	F1	97	27
PIN, COTTER, 2.0X32	F1	97	27
PIN, COTTER, 2.5MM	D12	70	12
PIN, PAD RETAINER GROOVE, 5.5MM DIA	D10	67	18
PIN, PISTON	B8	16	1
	C2	29	3
PIN, PISTON, 10X33	B8	16	1
PIN, RING GEAR STOPPER	E2	74	14
PIN, SPLIT, 1.6X10	E11	93	27
PIN, SPLIT, 1.6X15	E10	91	14
	E11	93	28
PIN, SPLIT, 1.6X25	E10	91	14
	E11	93	28
PIN, SPLIT, 2.0X18	F1	96	27
PIN, SPLIT, 2.0X20	F1	97	27
PIN, SPLIT 2.0X25	F1	97	27
PIN, SPLIT 2.0X35	F1	97	27
PIN, SPLIT, 2.5MM	D12	70	12
PIN, SPLIT, 3.0X50	E7	85	26
PIN, SPRING, 3X16	B12	24	17
PIN, STEP BAR JOINT	E11	92	1
PIN, 10X44	B8	16	3
PIPE A-1, WATER	C6	36	5
PIPE A-2, WATER	C6	36	6
PIPE A, OIL PATH	B2	4	6
PIPE A, OUTLET WATER	C6	37	12
PIPE A, WATER OUTLET	C6	36	12
PIPE B-2, WATER	C6	36	11
PIPE B, OUTLET WATER	C6	37	13
PIPE B, WATER OUTLET	C6	37	13
PIPE B1, WATER	C6	36	10
PIPE COMP., CLUTCH	D5	56	6
PIPE COMP., FR. FORK	D8	63	5
PIPE COMP., JOINT	F8	110	2
PIPE, AIR VENT	C8	41	10
PIPE, L. EX.	E9	89	13

© AMERICAN HONDA MOTOR CO., INC. 1993

Description Index

Description	Grid	Page	Ref. No.
PIPE, OIL	B12	24	9
PIPE, R. EX.	E9	88	4
PIPE, SEAT	D8	63	15
PIPE, THREE WAY JOINT	E7	84	8
PIPE, THROTTLE GRIP	D3	53	10
PISTON	C2	29	2
	D10	66	5
PISTON COMP., VACUUM	C9	43	13
PISTON SET, CLUTCH MASTER CYLINDER	D5	56	5
PISTON, SLAVE CYLINDER	B9	19	7
PLATE	D10	67	19
PLATE A, THRUST	C4	33	20
PLATE B, CLUTCH	B6	13	11
PLATE SET, VALVE	C9	42	7
PLATE, BATTERY SUPPORT	E7	85	20
PLATE, BEARING SETTING	C4	32	2
	C5	35	17
PLATE, CLUTCH	B6	13	11
PLATE, CLUTCH LIFTER	B7	14	13
PLATE, CLUTCH PRESSURE	B7	14	12
PLATE, DUST GUARD	E1	73	8
PLATE, DUST SEAL	E12	95	10
PLATE, ELECTRIC	E7	85	21
PLATE, GEARSHIFT	C5	35	14
PLATE, L. FR. ENGINE HANGER	F8	110	6
PLATE, ORIFICE	C1	26	7
PLATE, PULSER	C3	31	11
PLATE, SETTING	C1	26	8
PLATE, SPRING JOINT	D8	63	4
PLATE, SPRING SETTING	B6	13	8
PLIERS, 135	F9	112	14
PLUG, BREATHER TUBE	E8	87	22
PLUG, CAMSHAFT	B2	4	10
	B3	6	9
PLUG, L. CRANKCASE	C1	26	4
PLUG, ROCKER ARM SHAFT	B4	8	8
	B4	8	9
PLUG, SPARK	B2	5	25
	B3	7	19
PROTECTOR	D4	54	7
PROTECTOR, ELEMENT	E8	86	8
PROTECTOR, EX. SUB	E9	88	8
PROTECTOR, L. FR. EX.	E9	88	12
PROTECTOR, L. FR. EX. PIPE	E9	89	12
PROTECTOR, L. RR. EX. PIPE	E9	88	11
PROTECTOR, R. FR. EX. PIPE	E9	88	9
PROTECTOR, R. RR. EX. PIPE	E9	88	10
PUMP ASSY., FUEL	E7	84	1
PUMP ASSY., OIL	B11	23	1
PUMP COMP., WATER	B9	19	2

(R)

Description	Grid	Page	Ref. No.
RACE, STEERING LOWER	D7	60	4
RACE, STEERING LOWER BALL	D7	60	4
RACE, STEERING LOWER CONE	D7	60	7
RACE, STEERING TOP BALL	D7	60	3
RACE, STEERING TOP CONE	D7	60	6
RADIATOR COMP.	F7	108	2
RAIL, L. GRAB	F3	100	11
RAIL, R. GRAB	F3	100	10
RAIL, UPPER GRAB	F3	100	8
RECTIFIER ASSY., REGULATOR	E6	83	1
RECTIFIER ASSY., SILICON	F6	106	12
REFLECTOR, FR. REFLEX	F7	109	21
REFLECTOR, L. RR. REFLEX	F3	100	3
REFLECTOR, R. RR. REFLEX	F3	100	2
REFLECTOR, TURN SIGNAL	F4	102	4
RELAY COMP., TURN SIGNAL	E6	83	11
RELAY, FUEL CUT	E7	85	16
RETAINER, BEARING	E1	73	9
RETAINER, GEAR BOX	D11	68	7
RETAINER, VALVE SPRING	B4	9	19
RIM, HEADLIGHT	D1	48	2
RING SET, PISTON	C2	29	1
RING, BACK UP	D8	63	7
RING, HANDLE WEIGHT SNAP	D6	59	9
RING, PISTON	D8	63	12
RING, SEAL	B10	21	6
RING, STOPPER	E12	95	6
ROD ASSY., CONNECTING	C2	29	5
ROD, CLUTCH LIFTER	B7	14	17
ROD, PUSH	D5	56	3
ROLLER, 3X10	C5	35	27
ROTOR, POSITIVE STOPPER	C5	34	8
RUBBER A, STAND STOPPER	E9	89	19
RUBBER ASSY., SOCKET	D2	51	18
RUBBER, AIR CLEANER CASE MOUNTING	E3	77	2
RUBBER, BATTERY BOX	E7	85	22
	F3	101	16
RUBBER, BREATHER TUBE	B2	4	4
	B3	6	4
RUBBER, FILLER NECK STOPPER	F7	108	8
RUBBER, FUEL PUMP MOUNTING	E7	84	2
RUBBER, GEARSHIFT PEDAL	E10	90	2
RUBBER, HANDLEBAR WEIGHT	D6	59	8
RUBBER, INDICATOR	D2	50	6
RUBBER, JOINT BOX COVER	D2	50	3
RUBBER, MAIN FOOTPEG	E11	92	13
RUBBER, PILLION STEP	E11	93	18
RUBBER, PROTECTOR PACKING	E9	88	2
RUBBER, RADIATOR MOUNTING	F7	108	14
RUBBER, SHOCK	E6	83	6
RUBBER, STAND	E12	94	4
RUBBER, STOPPER	F2	98	12

© AMERICAN HONDA MOTOR CO., INC. 1993

Description Index

Description	Grid	Page	Ref. No.
RUBBER, STOPPER ARM	E12	95	8
RUBBER, TAILLIGHT MOUNTING	F5	105	17
RUBBER, TANK, FR.	E3	77	10
RUBBER, TOOL CASE STOPPER	F3	101	21
(S)			
SCREW SET	C8	41	2
SCREW SET A	C9	42	5
SCREW SET B	C8	41	2
SCREW SET C	C9	42	6
SCREW-WASHER, 4X10	D2	51	30
SCREW-WASHER, 4X12	D4	55	21
	D5	57	18
	E7	85	24
SCREW-WASHER, 4X14	C9	43	18
SCREW-WASHER, 4X6	D3	53	18
SCREW-WASHER, 5X30	D3	53	16
SCREW-WASHER, 5X35	D2	51	28
	D3	53	17
SCREW-WASHER, 6X12	D2	51	29
	E7	85	25
SCREW, BEAM ADJUSTING	D1	48	3
SCREW, BLEEDER	B9	19	8
SCREW, FLAT, 4X12	D4	55	20
	D5	57	17
SCREW, FLAT, 6X16	C4	33	21
	C5	35	19
SCREW, OVAL, 5X20	D2	51	27
SCREW, PAN	C8	41	5
	C8	41	6
SCREW, PAN 6X16	E9	89	17
SCREW, PAN, 3X8	E6	83	20
SCREW, PAN, 4X10	C9	43	17
	D2	51	26
SCREW, PAN, 5X16	D1	49	17
SCREW, PAN, 5X25	B2	5	23
	B3	7	17
	E8	87	29
SCREW, PAN, 5X8	B2	5	22
	B3	7	16
	D1	49	16
SCREW, PAN, 6X12	E9	89	16
SCREW, PAN, 6X16	E9	89	17
SCREW, TAPPING, 3X10	D2	51	31
SCREW, TAPPING, 4X12	F4	103	20
SCREW, TAPPING, 4X25	F4	103	21
SCREW, TAPPING, 4X30	F5	105	19
SCREW, TORUS, 6X7	E8	87	26
SCREW, WASHER, 4X8	E4	78	20
SEAL SET, FR. FORK	D9	64	19
SEAL, AIR CLEANER CAP	E8	86	7
SEAL, DUST, 22X42X7	D11	69	15
SEAL, PISTON	D10	67	16
SEAL, RUBBER	F6	106	2
SEAL, VALVE STEM	B4	8	1
	C10	44	2
SEAL, WATER PIPE	C6	37	21
	C11	47	19
SEAT ASSY., FR.	E5	80	1
SEAT ASSY., RR.	E5	80	2
SEAT, SPRING	F2	98	6
SEAT, VALVE SPRING	B4	9	20
SENSOR, FUEL RESERVE	E4	78	14
SENSOR, STOP & TAIL	F3	100	6
SHAFT COMP., GEARSHIFT FORK	C5	34	4
SHAFT SET, CROSS	C7	39	9
SHAFT, PROPELLER	E12	95	3
SHAFT, TAPPET ADJUSTING ASSIST	B4	8	7
SHAFT, VALVE ROCKER ARM	B4	8	4
	B4	8	5
	B4	8	6
SHIM A, PINION GEAR	E2	74	16
SHIM A, STOPPER PIN	E2	74	15
SHIM B, PINION GEAR	E2	74	16
SHIM B, STOPPER PIN	E2	74	15
SHIM C, PINION GEAR	E2	74	16
SHIM D, PINION GEAR	E2	74	16
SHIM E, PINION GEAR	E2	74	16
SHIM F, PINION GEAR	E2	74	16
SHIM G, PINION GEAR	E2	74	16
SHIM, CROSS SHAFT	C7	38	8
SHIM, DAMPING	D11	69	12
SHIM, FINAL DRIVE SHAFT	C7	38	6
SHIM, TAPPET ADJUSTING	B4	8	10
SHOCK ABSORBER ASSY., L.	F2	98	11
SHOCK ABSORBER ASSY., R.	F2	98	1
SHOE COMP., RR. BRAKE	D12	70	5
SHROUD COMP.	F7	108	3
SLEEVE	D10	66	10
SLEEVE, PLUG	B2	4	5
	B3	6	5
SLEEVE, SHOCK PIPE	D8	63	9
SLIDER, STEP	E11	92	6
	E11	92	7
SPACER A, RING GEAR	E2	74	18
SPACER B, RING GEAR	E2	74	18
SPACER C, RING GEAR	E2	74	18
SPACER D, RING GEAR	E2	75	18
SPACER E, RING GEAR	E2	75	18
SPACER F, RING GEAR	E2	75	18
SPACER G, RING GEAR	E2	75	18
SPACER H, RING GEAR	E2	75	18
SPACER I, RING GEAR	E2	75	18
SPACER, 8MM	B6	13	4
SPANNER, PIN	F9	112	9
SPANNER, 10X12	F9	112	12

© AMERICAN HONDA MOTOR CO., INC. 1993

Description Index

Description	Grid	Page	Ref. No.
SPANNER, 14X17	F9	112	13
SPANNER, 8MM	F9	112	11
SPEEDOMETER ASSY., COMBINATION	D2	50	7
SPINDLE COMP. B, GEARSHIFT	C5	35	12
SPINDLE COMP., GEARSHIFT	C5	34	11
	C5	34	12
	C5	35	12
SPINDLE COMP., RR. BRAKE	E10	90	9
SPRING	C8	41	3
	C9	43	10
SPRING A, BRAKE ROD	E10	91	15
SPRING COMP., TAPPET ADUST ASSIST	B4	9	11
SPRING D, SIDE STAND	E12	94	10
SPRING G, MAIN STAND	E12	94	9
SPRING, BRAKE ARM RETURN	D12	70	10
SPRING, BRAKE PEDAL	E10	90	10
SPRING, CAM CHAIN TENSIONER	B5	10	4
SPRING, CARBON BRUSH	B10	21	3
SPRING, CLUTCH	B7	14	16
SPRING, DAMPER	C7	39	12
SPRING, EX. VALVE OUTER	B4	9	17
SPRING, FR. BRAKE SHOE	D12	70	11
SPRING, FR. FORK	D8	63	2
SPRING, GEARSHIFT DRUM STOPPER	C5	34	10
SPRING, GEARSHIFT PLATE	C5	35	15
SPRING, GEARSHIFT RETURN	C5	35	16
SPRING, HEADLIGHT BEAM ADJUSTING	D1	48	4
SPRING, IN. VALVE OUTER	B4	9	16
SPRING, LICENCE PLATE RETURN	F3	101	22
SPRING, LOCK KEY SETTING	F3	101	15
SPRING, PAD	D10	66	6
SPRING, PROPELLER SHAFT	E12	95	5
SPRING, REBOUND	D8	63	6
SPRING, REFLEX REFLECTOR SETTING	F3	100	4
SPRING, SHOCK ABSORBER	F2	98	2
SPRING, SLAVE CYLINDER	B10	20	NI
SPRING, STEP RETURN	E11	92	5
SPRING, STOP SWITCH	E10	90	5
SPRING, TAPPET ADJUSTING ASSIST	B4	9	11
SPRING, VACUUM PISTON	C9	43	9
SPRING, VALVE INNER	B4	9	18
SPROCKET, CAM	B5	10	1
SPROCKET, CAM CHAIN DRIVE	C3	31	10
SPROCKET, OIL PUMP DRIVE	B6	13	1
SPROCKET, OIL PUMP DRIVEN	B11	23	2
STABILIZER, FR. SHOCK	D9	64	22
STAND COMP., MAIN	E12	94	1
STATOR COMP.	B8	17	9
STAY, FR. TURN SIGNAL	F4	103	10
STAY, GRAB RAIL SET	F3	100	9
STAY, GRAB RAIL SETTING	F3	100	9
STAY, L. HEADLIGHT	D1	49	13
STAY, LOWER COVER	D7	61	11
STAY, METER	D2	50	5
STAY, R. HEADLIGHT	D1	49	12
STAY, RR. COVER	B9	19	1
STAY, RR. TURN SIGNAL	F4	103	15
STAY, RUBBER LOWER	E1	73	4
STEM COMP., STEERING	D7	60	5
STEP ASSY., L. MAIN	E11	92	9
STEP ASSY., R. MAIN	E11	92	2
STOPPER COMP., GEARSHIFT DRUM	C5	34	9
STOPPER, STEP RUBBER	E11	92	8
STRAINER COMP., FUEL	E7	84	4
STRAINER, OIL	B11	23	3
SUB TANK, FUEL	E3	77	8
SUSPENSION, FUEL CUT RELAY	E7	85	17
SUSPENSION, TURN SIGNAL RELAY	E6	83	12
SWINGARM ASSY., RR.	E12	95	9
SWITCH ASSY., CLUTCH	D5	56	7
SWITCH ASSY., COMBINATION & LOCK	D6	58	2
SWITCH ASSY., FR. STOP	D4	54	1
SWITCH ASSY., NEUTRAL	C1	26	11
SWITCH ASSY., OIL PRESSURE	C1	26	10
SWITCH ASSY., RR. STOP	E10	90	3
SWITCH ASSY., STARTER KILL	D3	52	8
SWITCH ASSY., STARTER MAGNETIC	E6	83	5
SWITCH ASSY., TURN SIGNAL	D3	53	9

(T)

TACHOMETER ASSY.	D2	50	12
TAILLIGHT UNIT	F5	104	1
TANK SET, FUEL	E3	77	3
TANK, RESERVE	F7	108	11
TANK, STORAGE	E8	86	2
TENSIONER COMP., CAM CHAIN	B5	10	3
TERMINAL SET, BRUSH	B10	21	2
THERMOSTAT	C6	36	2
THERMOSTAT UNIT	C6	37	18
THERMOSWITCH ASSY.	F7	109	22
THREAD COMP., STEERING HEAD TOP	D7	60	10
TIRE ASSY., FR.	D11	68	8
TIRE ASSY., RR.	E1	72	5
TOOL SET	F9	112	1
TOP COMP.	C9	43	12
TUBE A, FUEL	E7	84	11
TUBE B, FUEL	E7	84	10
TUBE C, FUEL	E7	84	12
TUBE, AIR CLEANER CHAMBER CONNECTING	E8	87	19
TUBE, AIR CLEANER CONNECTING	E8	87	17
TUBE, AIR CLEANER DUCT	E8	86	4
TUBE, BATTERY	E7	85	15
TUBE, BREATHER	E8	86	12
TUBE, CARBURETOR FUEL	E7	84	7
TUBE, DRAIN	E8	87	20
TUBE, ENGINE BREATHER	E8	86	14

© AMERICAN HONDA MOTOR CO., INC 1993

Description Index

Description	Grid	Page	Ref. No.
TUBE, FUEL	E3	77	4
TUBE, FUEL, 5.3X280	E7	84	13
TUBE, LEVEL	F7	108	10
TUBE, VINYL, 8X12X100	E8	87	31
TUBE, 5.3X190	E4	79	21
TUBE, 5.5X130	E7	85	27
TUBE, 7X400	F7	109	32
TUBE, 7X800	F7	109	33
TURN SIGNAL ASSY	F4	102	1
	F4	102	8
	F4	103	13
TURN SIGNAL ASSY., L. FR	F4	102	1
	F4	102	8
TURN SIGNAL ASSY., L. RR	F4	103	13
TURN SIGNAL ASSY., R. FR	F4	102	1
	F4	102	8
TURN SIGNAL ASSY., R. RR	F4	103	11
TURN SIGNAL, R. RR	F4	103	11
(U)			
UNIT ASSY., SPARK	F3	100	1
(V)			
VALVE ASSY., FUEL	E7	84	5
VALVE ASSY., RELIEF	B11	23	7
VALVE SET, FLOAT	C9	42	2
VALVE SET, STARTER	C9	42	8
VALVE, BLEEDER	D10	67	20
VALVE, EX	B4	9	15
VALVE, IN	B4	9	14
VALVE, RIM	D11	68	2
	E1	72	6
VT750C/700C,83,84,85 SHADOW SERVICE MANUAL	B1	2	
(W)			
WASHER B, THRUST, 25MM	C4	33	26
WASHER, ANCHOR PIN	D12	70	4
WASHER, BEAM ADJUSTING	D1	48	6
WASHER, CAP	F6	106	3
WASHER, DRAIN PLUG, 14MM	C1	27	26
	C11	47	22
WASHER, LOCK	C5	35	22
WASHER, LOCK, 25MM	C4	33	27
WASHER, OIL BOLT	B2	5	18
	C10	44	9
	D4	55	18
	D5	57	15
WASHER, PILLION STEP	E11	93	19
WASHER, PLAIN, 10MM	D10	67	25
WASHER, PLAIN, 16MM	F2	98	14
WASHER, PLAIN, 3X10	E6	83	10
WASHER, PLAIN, 4MM	F5	105	22
WASHER, PLAIN, 6MM	E3	76	39
	E11	93	25
WASHER, PLAIN, 8MM	E11	93	26
	F1	96	25
WASHER, RR. BRAKE ANCHOR PIN	D12	70	4
WASHER, SEALING, 10MM	B1	2	13
WASHER, SEALING, 6MM	B5	10	8
	C1	27	21
	C10	44	8
	C11	46	8
WASHER, SEALING, 7MM	B1	3	14
	B2	5	16
	C7	39	20
	C10	44	7
WASHER, SHIFT DRUM STOPPER	B12	24	12
WASHER, SPECIAL, 35X40	E2	74	17
WASHER, SPECIAL, 8MM	D9	65	27
WASHER, SPEEDOMETER GEAR	D11	69	11
WASHER, SPRING, 22MM	B7	14	20
WASHER, SPRING, 4MM	C8	41	11
WASHER, SPRING, 5MM	B11	22	14
	C8	41	12
	D1	49	18
WASHER, SPRING, 6MM	D2	51	32
	E6	83	23
WASHER, SPRING, 8MM	F1	96	26
WASHER, STEERING HEAD DUST SEAL	D7	60	9
WASHER, STEERING STEM	D6	59	17
WASHER, THRUST, 12.5MM	C5	35	23
WASHER, THRUST, 20MM	C7	39	22
WASHER, THRUST, 20X1.00	C4	33	25
WASHER, THRUST, 25X34	C4	33	24
WASHER, THRUST, 5MM	B2	5	17
	B3	6	13
WASHER, TONGUED	C7	39	24
WASHER, WAVE	D2	51	24
WASHER, WAVE, 22MM	D3	52	6
WASHER, 10.2MM	C7	39	23
WASHER, 10.3MM	F2	98	15
WASHER, 10MM	C4	33	23
WASHER, 44X74X3.2	B7	14	22
WASHER, 44X85X1.6	B7	14	21
WASHER, 8MM	E2	75	26
	F1	96	20
WEIGHT, BALANCE	D11	68	1
	E1	72	4
WEIGHT, HANDLEBAR	D6	58	7
WHEEL SET, FR	D11	68	6
WHEEL SET, RR	E1	72	3

© AMERICAN HONDA MOTOR CO., INC. 1993

Description Index

Description	Grid	Page	Ref. No.
WIRE COMP., L. TURN SIGNAL	F4	103	9
	F4	103	14
WIRE COMP., LICENSE	F5	104	11
WIRE COMP., R. RR. TURN SIGNAL	F4	103	12
WIRE COMP., R. TURN SIGNAL	F4	102	5
WIRE COMP., TAILLIGHT	F5	104	4
WIRE 1, HIGH TENSION	F6	106	8
WIRE 2, HIGH TENSION	F6	106	9
WIRE 3, HIGH TENSION	F6	106	10
WIRE 4, HIGH TENSION	F6	106	11
WRENCH, EYE, 10X12	F9	112	8
WRENCH, EYE, 22MM	F9	113	19
WRENCH, HEX., 5MM	F9	112	5
	F9	112	6
WRENCH, HEX., 8MM	F9	112	7
WRENCH, PLUG	F9	112	4

© AMERICAN HONDA MOTOR CO., INC. 1993

Description Index

Description	Grid	Page	Ref. No.

Description	Grid	Page	Ref. No.

© AMERICAN HONDA MOTOR CO., INC. 1993