SAMS

PHOTOFACT®

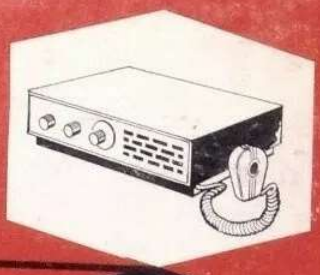

CB RADIO SERIES

CB-59

59

NOVEMBER 1974

CONTENTS

HOWARD W. SAMS & CO., INC. Indianapolis, Indiana

NOTE

ONLY THOSE PERSONS PROPERLY LICENSED ARE PERMITTED TO MAKE REPAIRS OR ADJUSTMENTS WHICH MAY RESULT IN ILLEGAL OPERATION. (REFER TO FCC RULES AND REGULATIONS PART 95, SUBPARTS C & D.)

The frequency of the transmitter should be checked periodically with a secondary frequency standard to insure proper and legal operation.

Best results will be obtained when adjusting the final RF output circuit if the antenna normally used is connected and the chassis is as nearly in the cabinet as possible.

Connect either 50-ohm dummy load or the normally used antenna system.

Cobra 139

ALIGNMENT

Suggested Alignment Tools:	GC ELECTRONICS
All Tuneable Transformers and Coils	#9440
All Trimmer Caps	#8290, 8868, 9087

SYNTHESIZER ALIGNMENT

INDICATOR	CHANNEL	ADJUST	FREQUENCY	REMARKS
Frequency Counter	Any	CT7	7.8025 MHz +5 -0 Hz	Receiver in USB mode. Connect counter between TP6 and TP7.
RF Voltmeter	Any	T19		Receiver in USB mode. Connect voltmeter between TP6 and TP7. Adjust for maximum.
Frequency Counter	1	CT1	8.159 MHz 8.1615 MHz	Receiver in USB mode. Connect counter between TP4 and ground. Adjust for first frequency listed for each channel. With receiver in AM mode, check for second frequency listed. Repeat adjustment of first frequency if necessary.
	5	CT2	8.209 MHz 8.2115 MHz	
	9	CT3	8.259 MHz 8.2615 MHz	
	13	CT4	8.309 MHz 8.3115 MHz	
	17	CT5	8.359 MHz 8.3615 MHz	
	21	CT6	8.409 MHz 8.4115 MHz	

SYNTHESIZER ALIGNMENT (CONTINUED)

INDICATOR	CHANNEL	ADJUST	FREQUENCY	REMARKS
Frequency Counter	1 2 3 4	VR6	34.7675MHz 34.7775MHz 34.7875MHz 34.8075MHz	Receiver in USB mode. Connect counter between TP5 and ground. Set VR5 and VR4 to mid-range. Adjust VR6 for correct frequency on Channel 1. Check other channels for listed frequency, repeat adjustment on Channel 1 if necessary.
	1 2 3 4		19.1625MHz 19.1725MHz 19.1825MHz 19.2025MHz	Receiver in LSB mode. Same as adjustment for VR6 above to check correct frequency.
RF Voltmeter	15	T14,T15, T16,T17 T18		Receiver to LSB mode. Voltmeter between TP5 and ground. Adjust for maximum.
	15	T7,T8,T9 T10, T11, T12, T13		Receiver to USB mode. Voltmeter between TP5 and ground. Adjust for maximum.

RECEIVER ALIGNMENT

Connect an AC VTVM across speaker voice coil. RF gain fully CW, PA/CB to CB, NB/off to off, ANL/off to off. Squelch fully CCW, voice lock to center. Adjust volume control to obtain suitable reading. Adjust VR17 for 15 VDC at emitter of TR27.

SIGNAL GENERATOR	CHANNEL	ADJUST	REMARKS
Connect high side thru a .01 uF to antenna jack, low side to ground. Set to 27.115 MHz (1000 Hz @ 30% Mod.) 0.15 uV output.	13	T1, T2 T3, T4, T5, T6	Receiver to USB mode. Adjust for maximum.
Same as above. 1 uV output.	13		Receiver to AM mode. This RF input should produce 0.5 Watt audio output.
Same as above. 100 uV output.	13	VR3	Receiver to USB mode. Adjust for "S9" on "S" meter.
Same as above. 1500 uV output.	13	VR8	Turn squelch control fully CW. Adjust so that squelch just breaks.
Same as above. 50 mV output.	13	VR7	Set to AM mode. Adjust volume control to obtain 0 dB. Decrease generator to 50 uV. Adjust so that signal does not drop more than 10 dB.
Same as above. .3 uV input.	13	VR1	Set volume for 0 dB output. Disconnect generator. Adjust so that output drops 10 dB or more.

TRANSMITTER ALIGNMENT

INDICATOR	ADJUST	REMARKS
RF Wattmeter RF Voltmeter Oscilloscope (Usable to 30 MHz) 0-1500 DC Milliammeter	T20,T21, T22,T23	Connect wattmeter to antenna connector. Connect voltmeter to antenna connector. Connect two tone generator to microphone input. Set Dynamike volume maximum CW. Set channel selector to CH 13. Set to USB mode. Key transmitter. Set generator output for 14 Vrms on voltmeter. Adjust for maximum on RF voltmeter.
	L8,L10	Same as above. Set generator level +28 dB from the 14 Vrms RF voltmeter reading. Key transmitter. Adjust for maximum on RF voltmeter.
	VR10	Connect scope to antenna connector. Set Dynamike volume maximum CCW. Key transmitter. Adjust to obtain MINIMUM carrier on oscilloscope.
	VR15	Connect audio generator to microphone input. Inject a 1000 Hz signal. Key Transmitter. Adjust for 12.5 Watts maximum.
	VR14	Connect scope to antenna connector. Set Dynamike volume maximum CW. Key transmitter. Set input level to 14 Vrms on RF voltmeter. Adjust to reduce crossover distortion to zero on oscilloscope.
	L8	Remove input signal. Set Dynamike volume maximum CCW. Set mode switch to AM. Insert milliammeter between L9 and L12. Key transmitter. Check DC input power, must not exceed 5 watts. Adjust to meet this condition.
	VR13	Same as above. Key transmitter. Adjust so that RF panel meter agrees with wattmeter.
	VR12	Set Dynamike volume to maximum CW. Set audio generator to 8 mV @ 1000 Hz and connect to microphone input. Adjust so that modulator does not exceed 100% on oscilloscope.
Modulation Monitor	VR18	Adjust so that panel modulation meter agrees with modulation monitor.
TV Receiver CH 2	L5	Key transmitter. Adjust for MINIMUM interference on TV set.

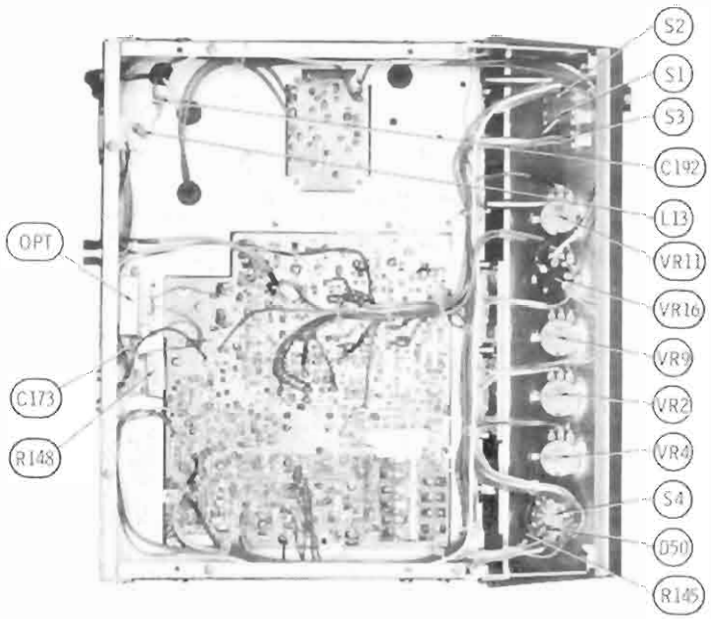

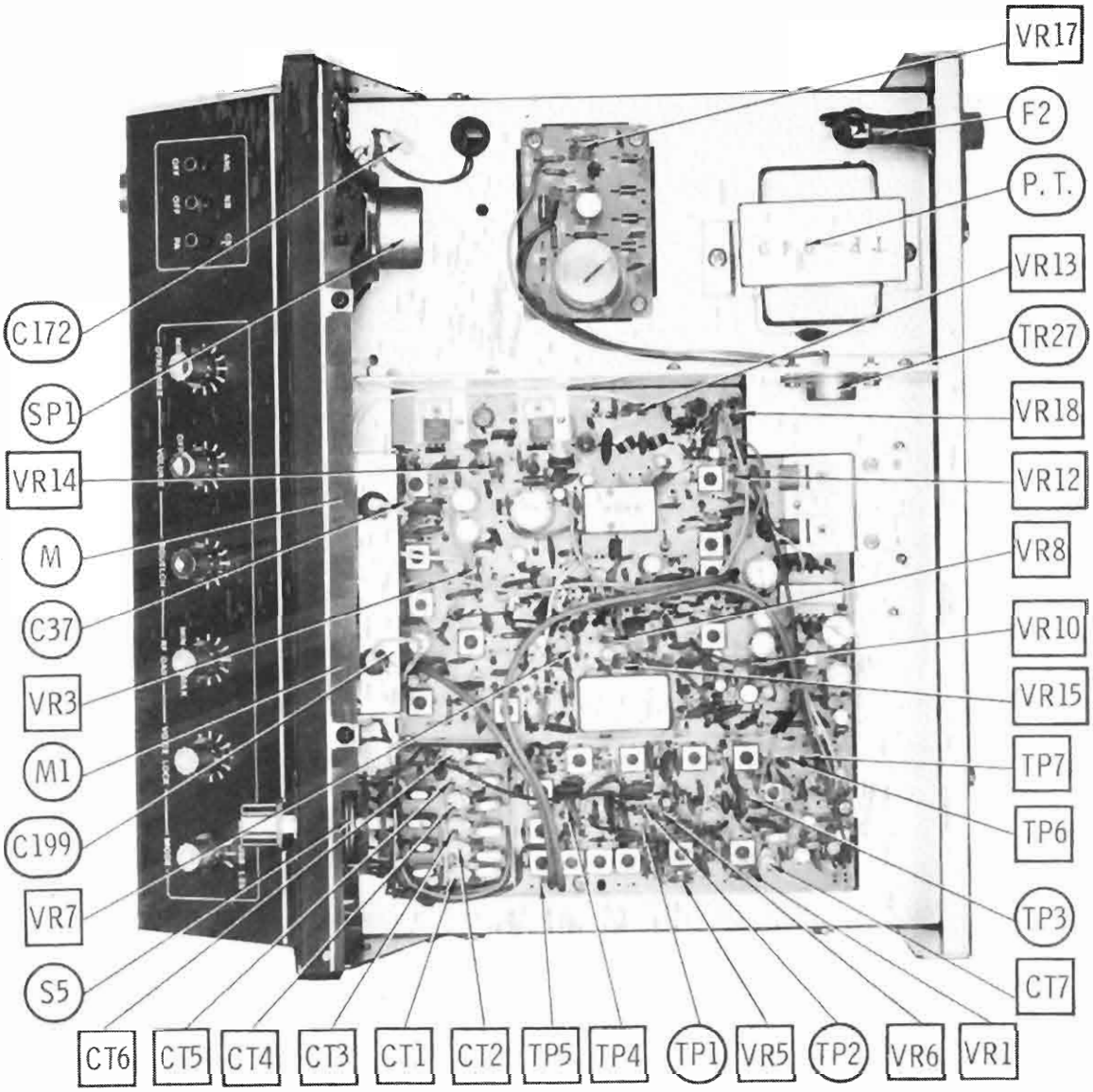
C172
SP1
VR14
M
C37
VR3
M1
C199
VR7
S5
CT6
CT5
CT4
CT3
CT1
CT2
TP5
TP4
TP1
VR5
TP2
VR6
VR1
CT7
TP3
TP6
TP7
VR15
VR10
VR8
VR12
VR18
TR27
VR13
P.T.
F2
VR17

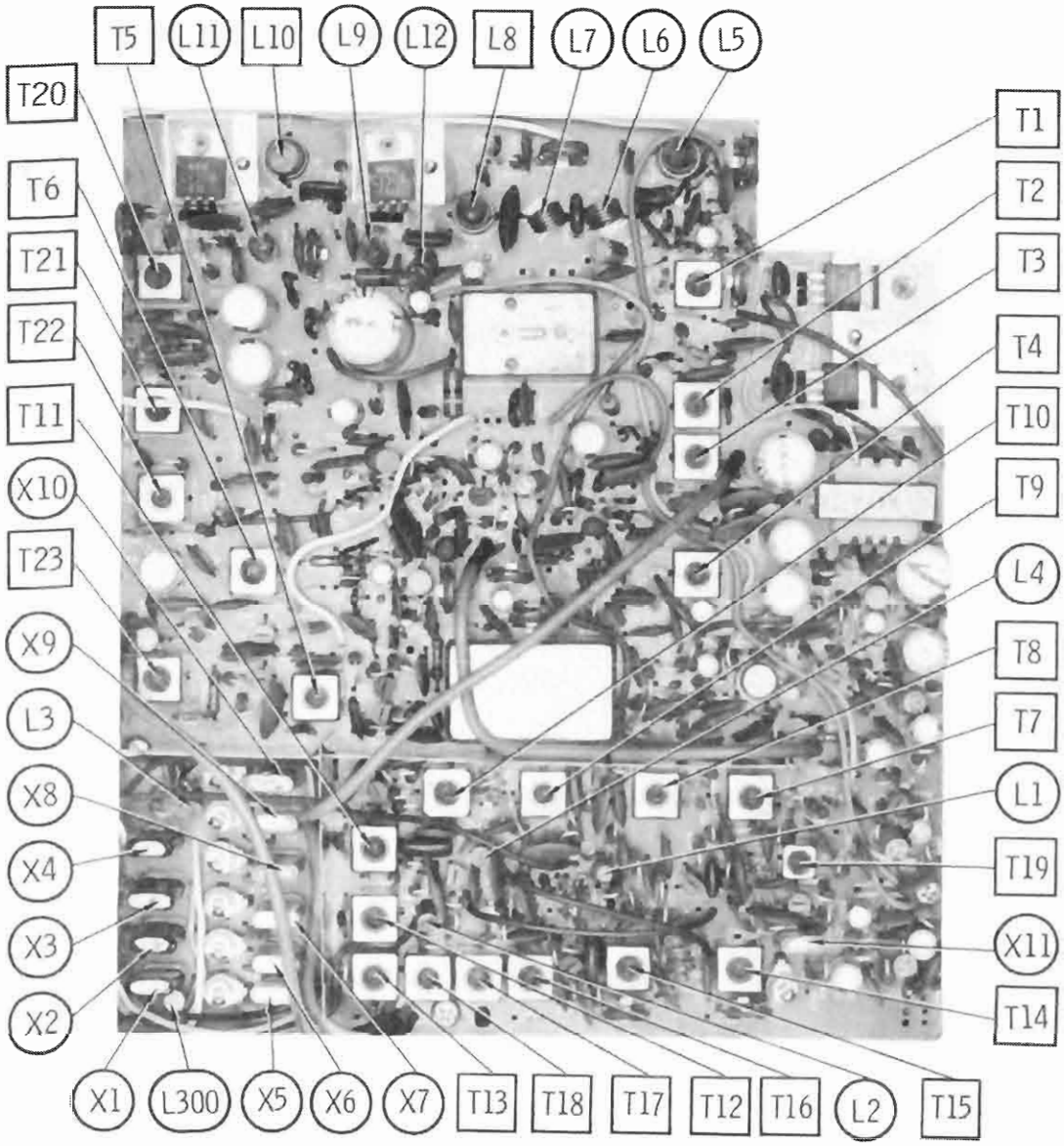
T5
L11
L10
L9
L12
L8
L7
L6
L5
T20
T6
T21
T22
T11
X10
T23
X9
L3
X8
X4
X3
X2
T1
T2
T3
T4
T10
T9
L4
T8
T7
L1
T19
X11
T14
X1
L300
X5
X6
X7
T13
T18
T17
T12
T16
L2
T15

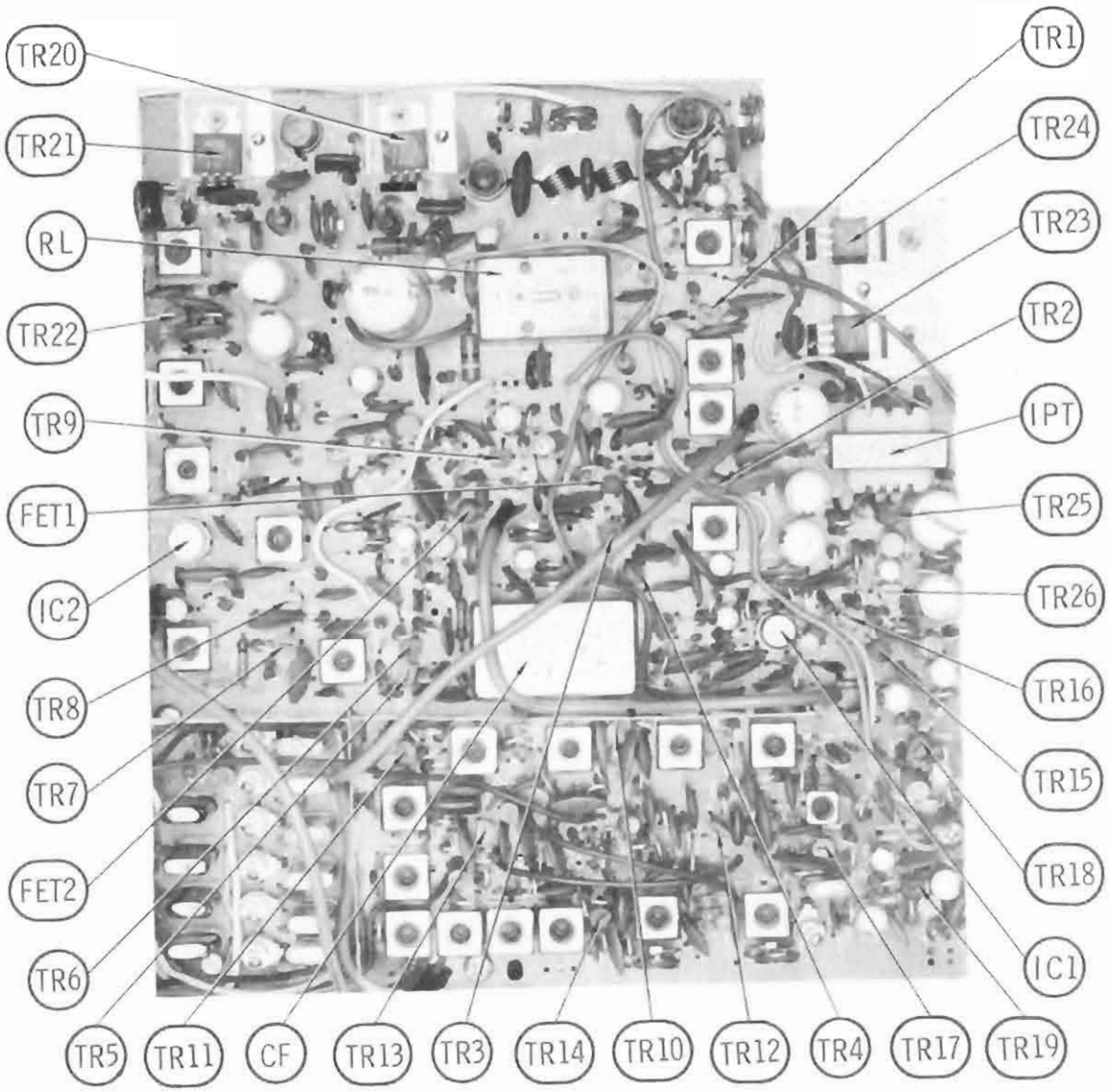
TR20
TR21
RL
TR22
TR9
FET1
IC2
TR8
TR7
FET2
TR6
TR5
TR11
CF
TR13
TR3
TR14
TR10
TR12
TR4
TR17
TR19
IC1
TR18
TR15
TR16
TR26
TR25
IPT
TR2
TR23
TR24
TR1

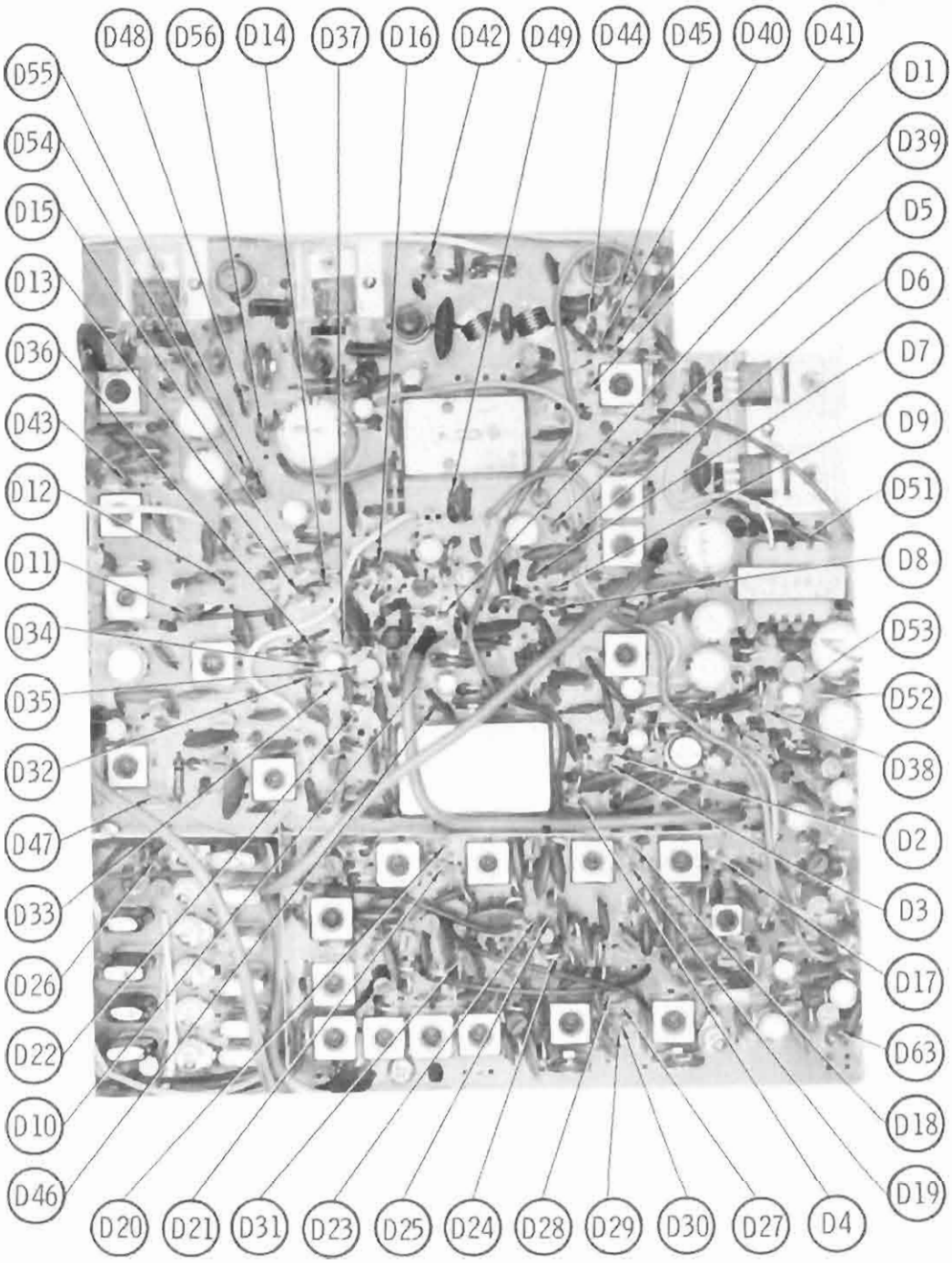
D48
D56
D14
D37
D16
D42
D49
D44
D45
D40
D41
D55
D54
D15
D13
D36
D43
D12
D11
D34
D35
D32
D47
D33
D26
D22
D10
D46
D1
D39
D5
D6
D7
D9
D51
D8
D53
D52
D38
D2
D3
D17
D63
D18
D19
D20
D21
D31
D23
D25
D24
D28
D29
D30
D27
D4

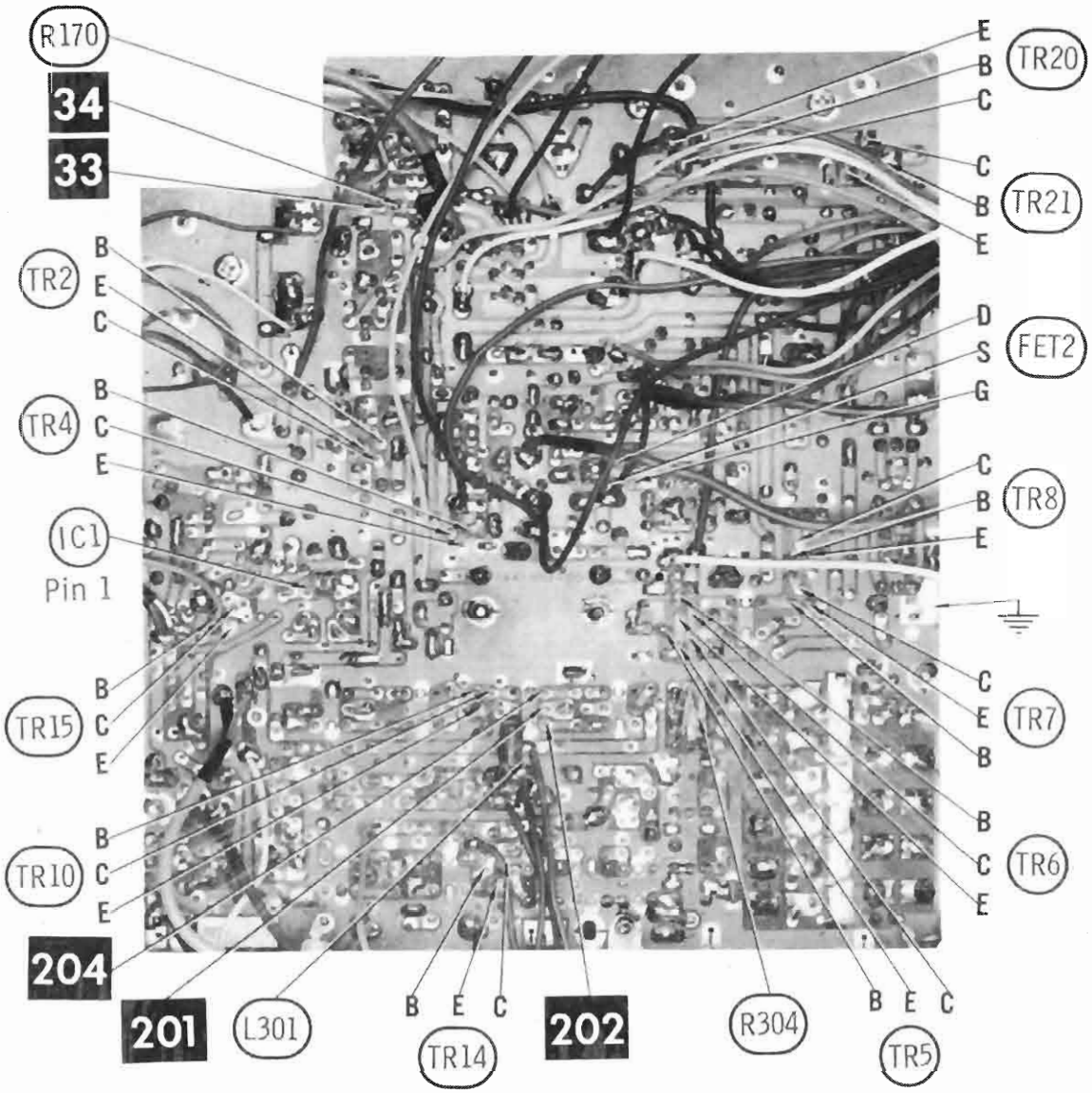

A Howard W. Sams CIRCUITRACE Photo

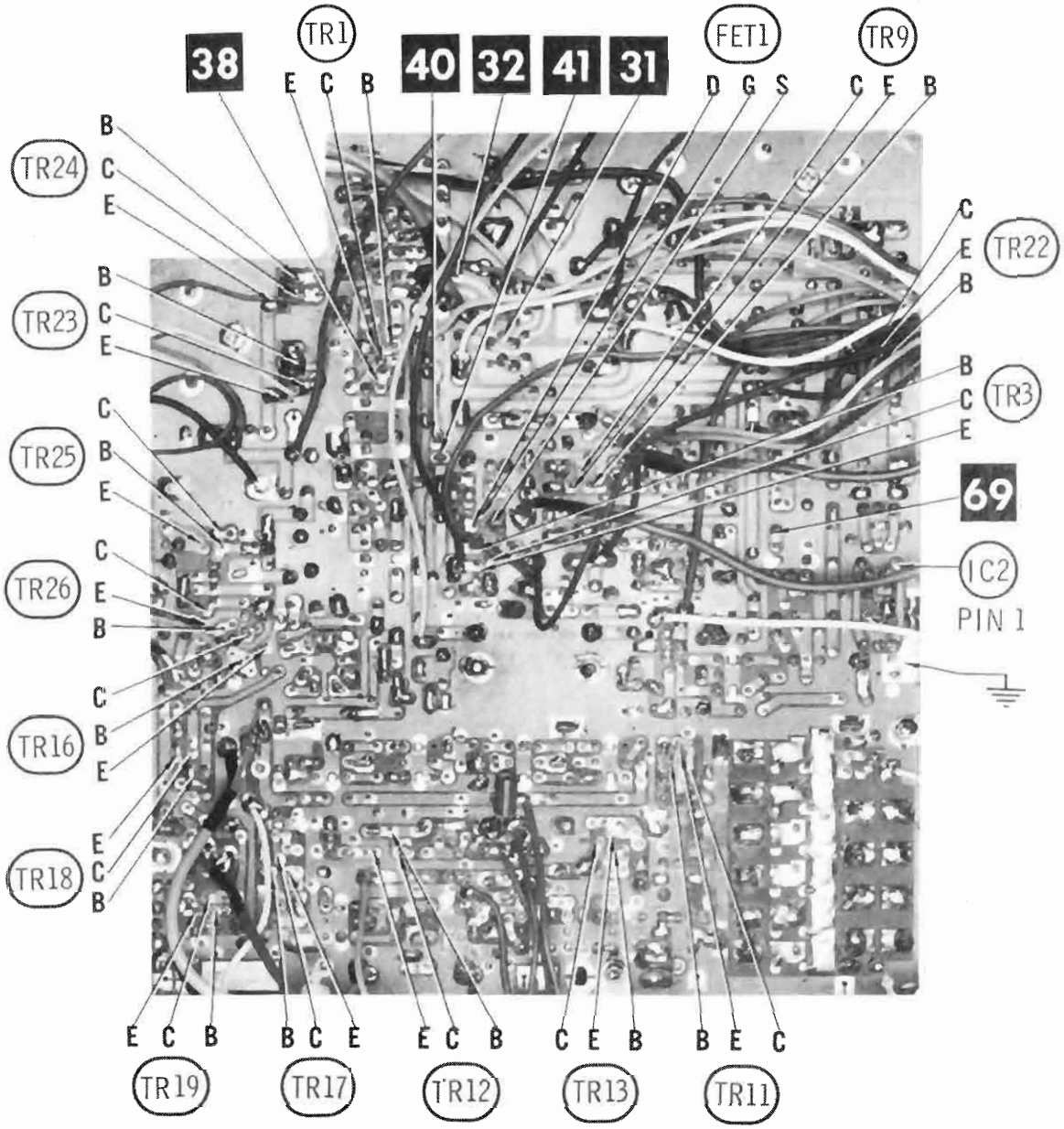

A Howard W. Sams CIRCUITRACE® Photo

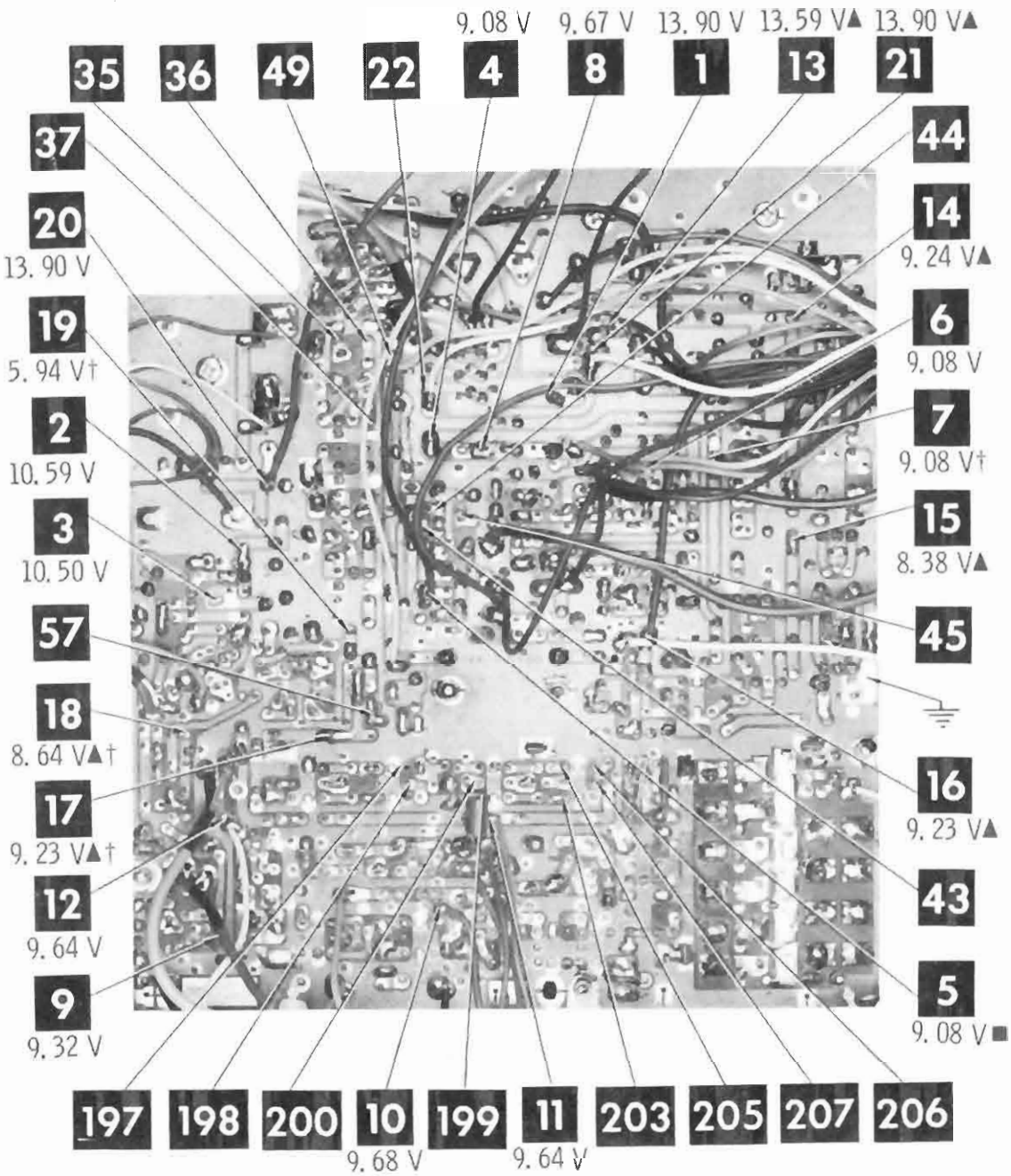

A Howard W. Sams CIRCUITRACE® Photo

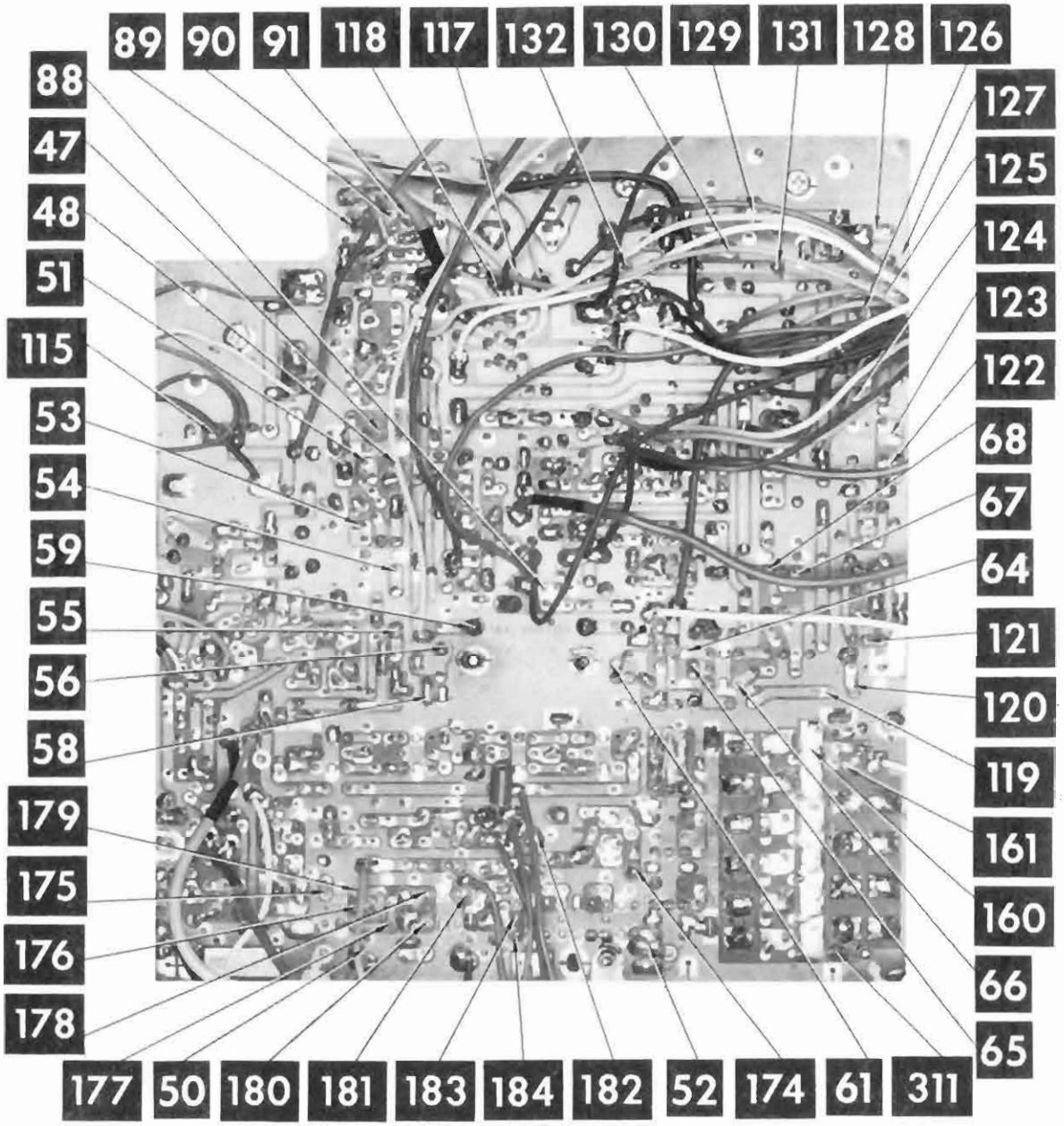

COBRA MODEL 139

A Howard W. Sams CIRCUITRACE® Photo

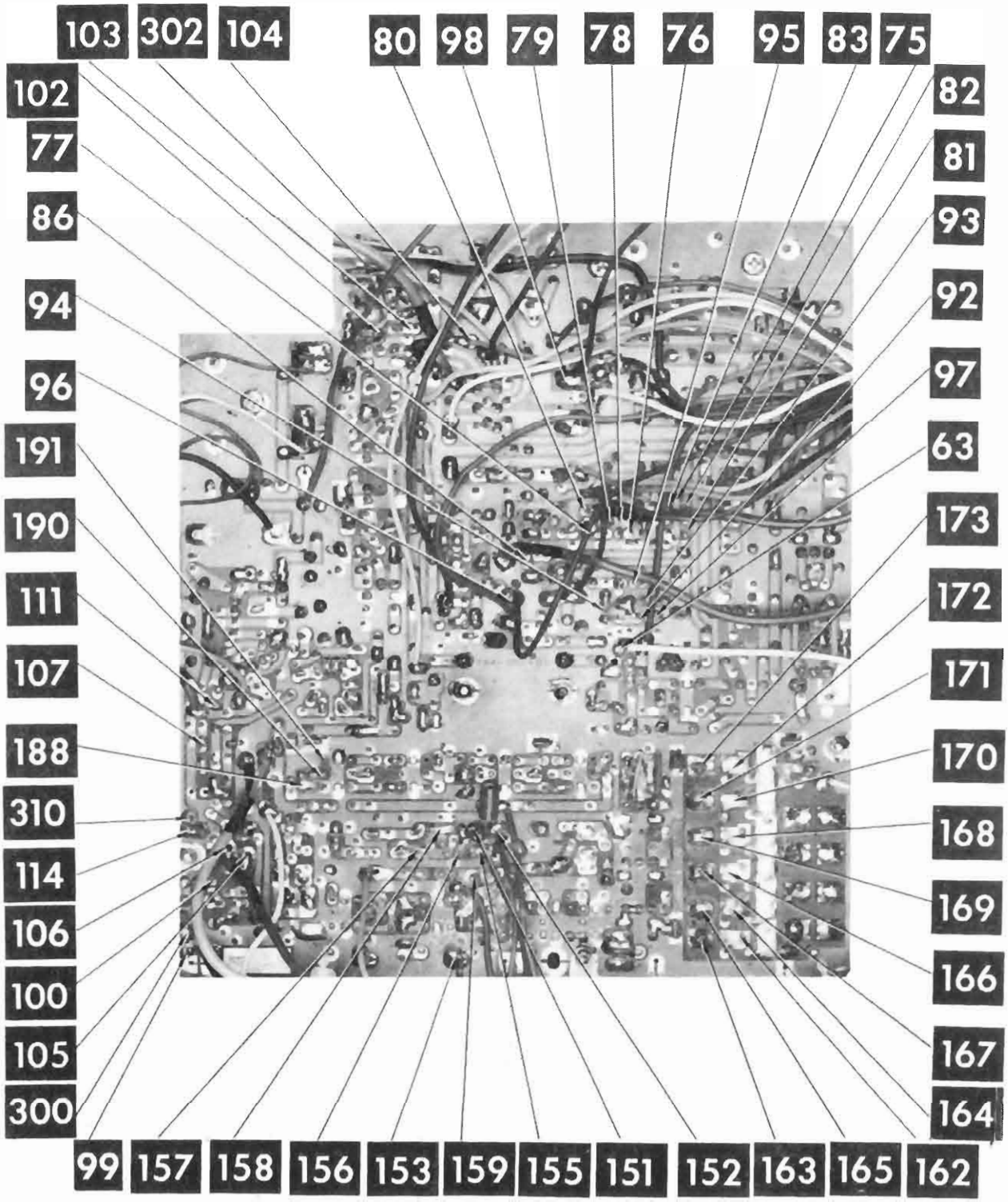

A Howard W. Sams CIRCUITRACE® Photo

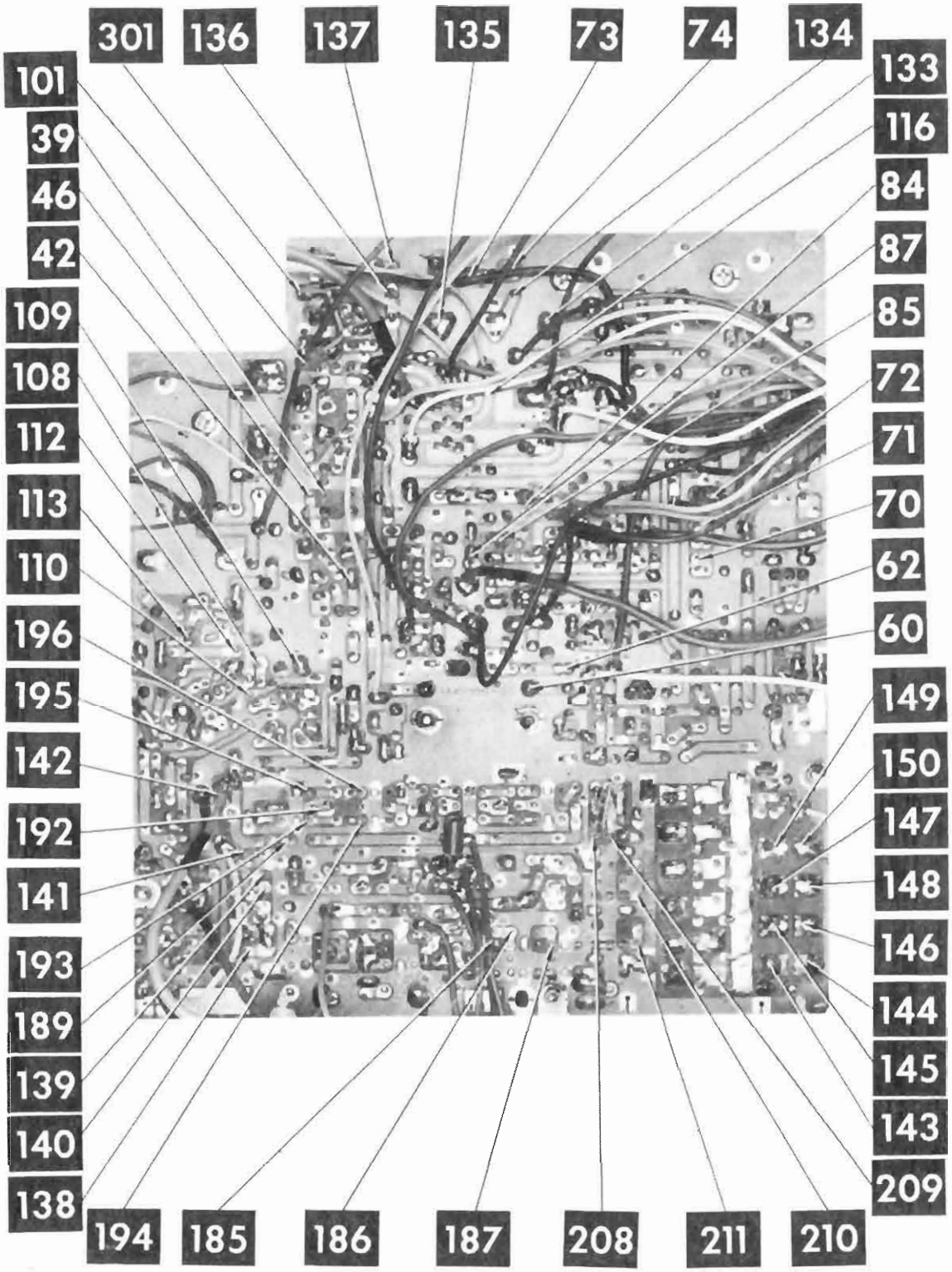

A Howard W. Sams CIRCUITRACE® Photo

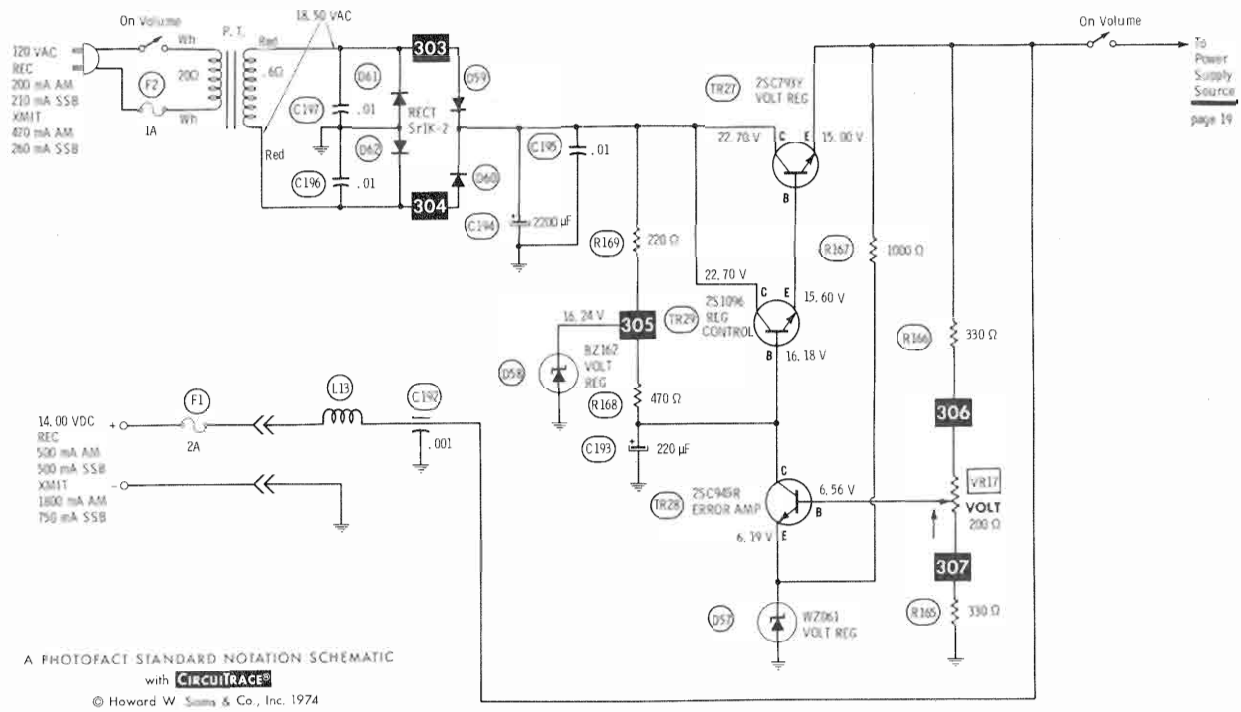

SEE NOTES ON PAGE 20

COBRA MODEL 139

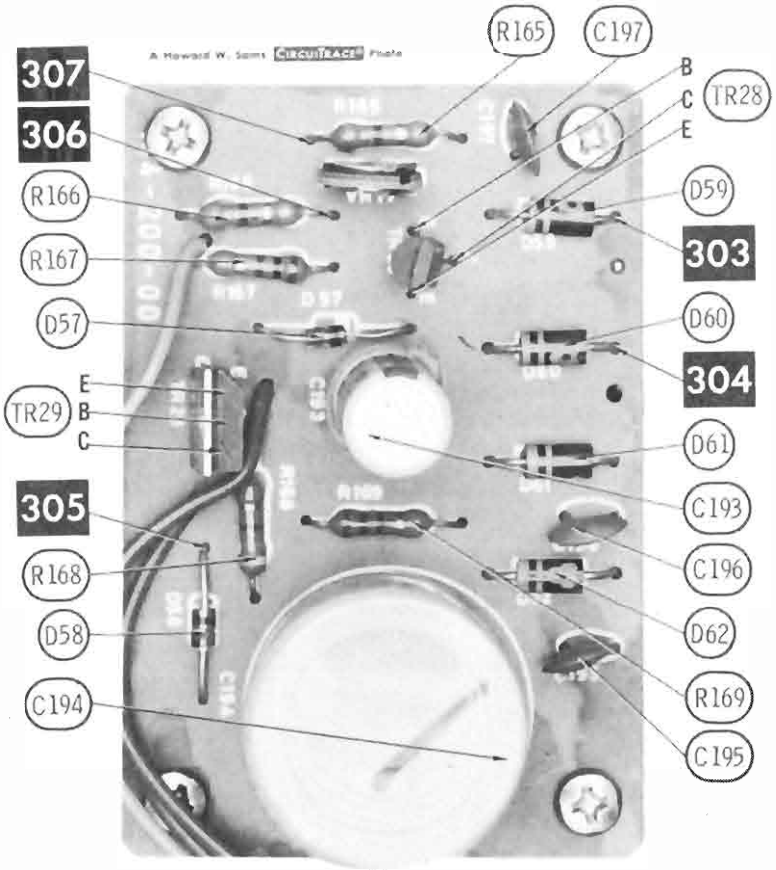

POWER SUPPLY BOARD

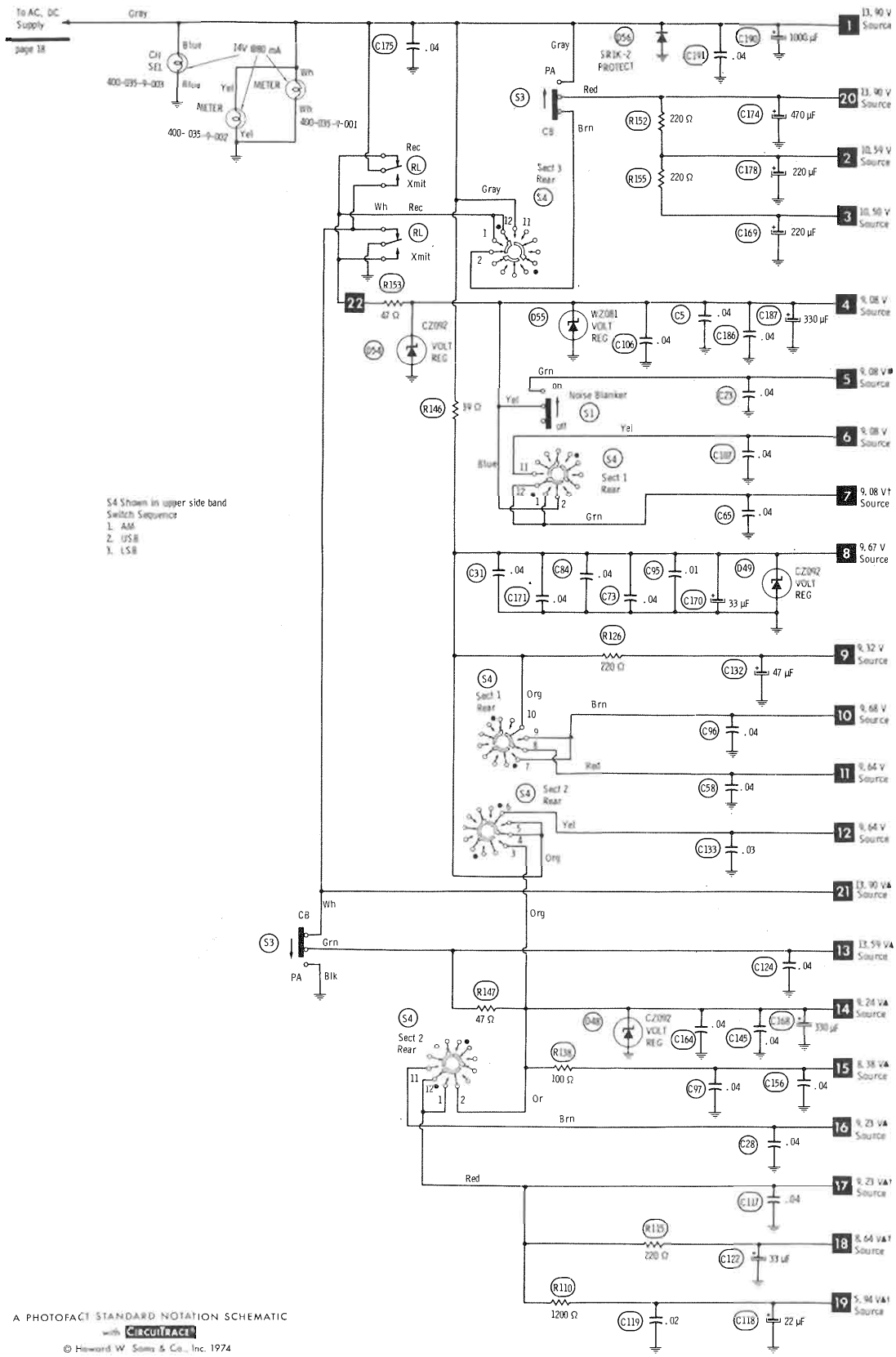

S4 Shown in upper side band
Switch Sequence
1. AM
2. USB
3. LSB

A PHOTOFACT STANDARD NOTATION SCHEMATIC
with CIRCUITRACE®

SEE NOTES ON PAGE 20

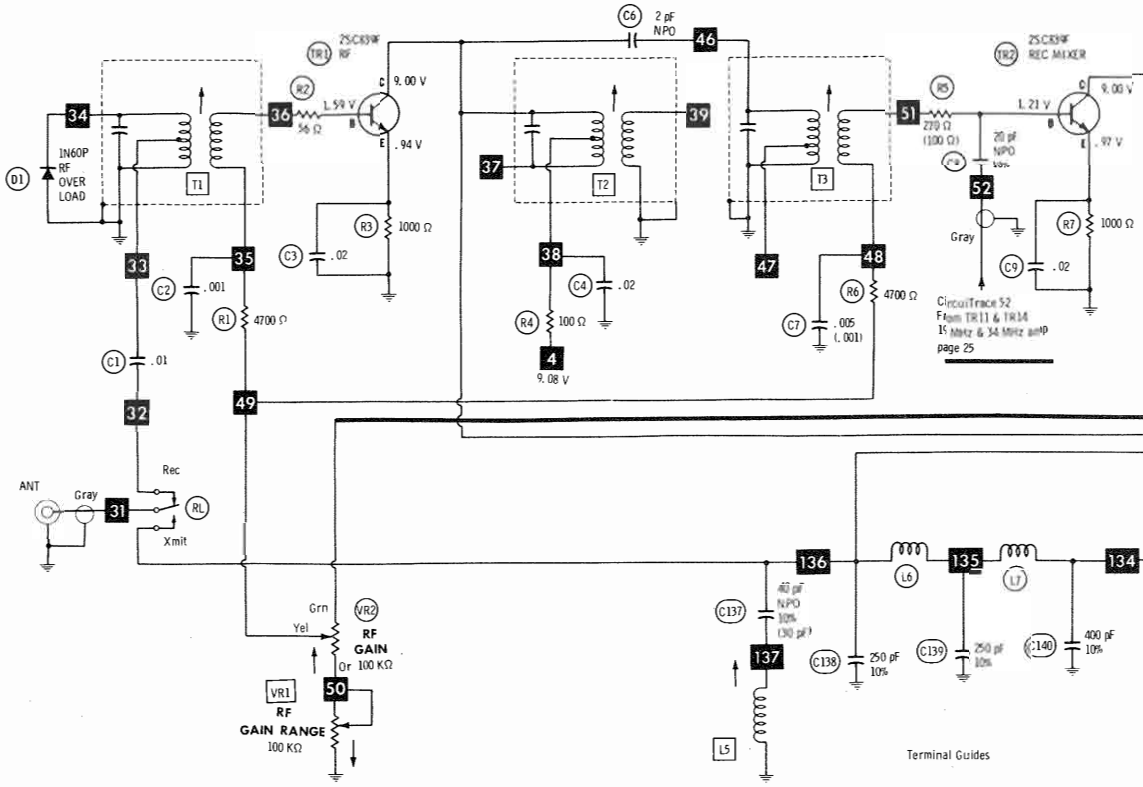

■ Noise Blanker on
† SSB
Denotes chassis.
Denotes ground. (Voltage reference unless otherwise indicated)
Indicates connection used in some versions.
Indicates connection not used in some versions.
* Omitted in some versions.
⊖ See parts list.
※ Value varies; replace with original value.
▲ Measured in transmit position.
● Measured with unit squelched.
Not used in COBRA 139A
NC No Connection.
Measurements taken with switching in position shown unless otherwise indicated.
Values shown in ( ) are used in some applications.
Supply voltage maintained at rated value for measurements.
Voltage and resistance measured with VTVM or equivalent meter, no signal applied and controls adjusted for normal operation.
Arrow on control indicates direction of advance.
Numbers assigned to terminals may not be found on the unit.
Transistor resistances vary widely; no resistance measurements taken.
Resistors are 1/2W or less, 5%, unless otherwise indicated.

A PHOTOFACT STANDARD NOTATION SCHEMATIC
with CIRCUITRACE®

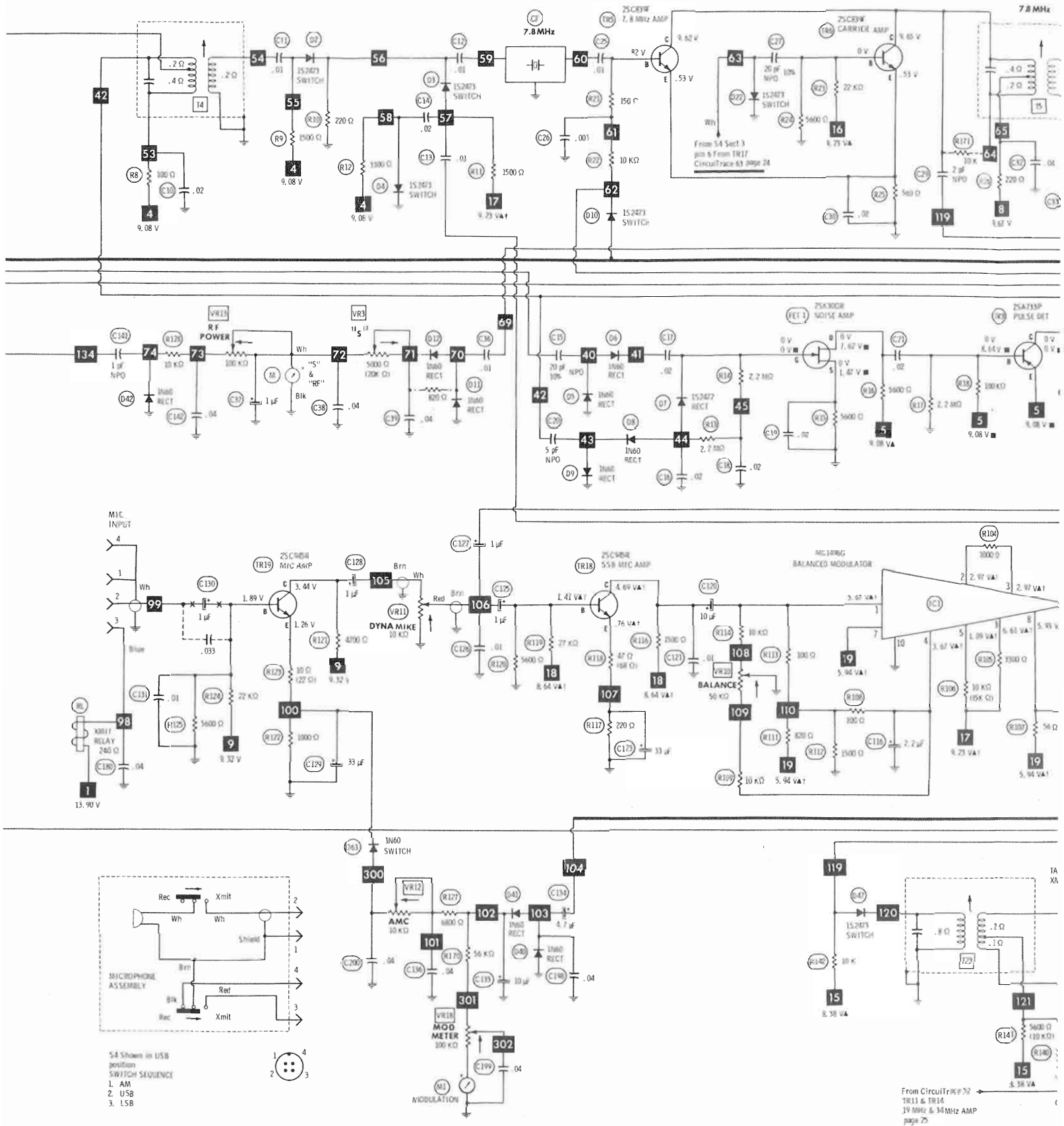
7.8 MHz
2SC839F 7.8 MHz AMP
2SC839F CARRIER AMP
RF POWER
"S" & "RF"
2SK30GR NOISE AMP
2SA733P PULSE DET
MIC INPUT
2SC948R MIC AMP
DYNA MIKE
2SC948R SSB MIC AMP
MC1496G BALANCED MODULATOR
BALANCE
XMIT RELAY
MICROPHONE ASSEMBLY
AMC
MOD METER
MODULATION
S4 Shown in USB position
SWITCH SEQUENCE
1. AM
2. USB
3. LSB
From CircuitTrace 63 page 24
From CircuitTrace 52 TR11 & TR14 19 MHz & 34MHz AMP page 25

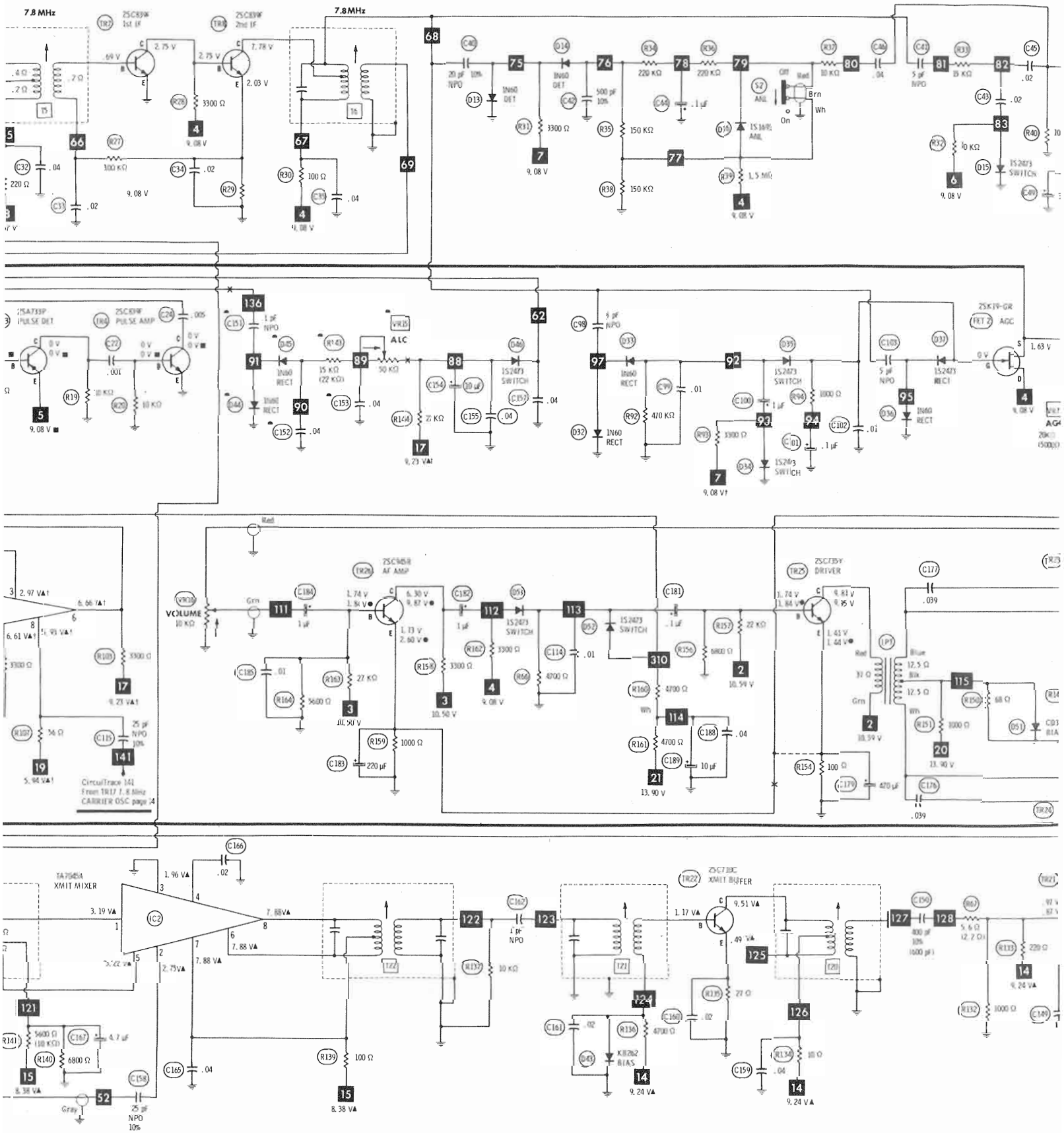
7.8 MHz
2SC839F 1st IF
2SC839F 2nd IF
7.8MHz
2SA733P PULSE DET
2SC839F PULSE AMP
ALC
2SK19-GR AGC
VOLUME 10 KΩ
2SC945R AF AMP
2SC738Y DRIVER
TA7045M XMIT MIXER
2SC738C XMIT BUFFER
CircuitTrace 141 From TR17 7.8 MHz CARRIER OSC page 14

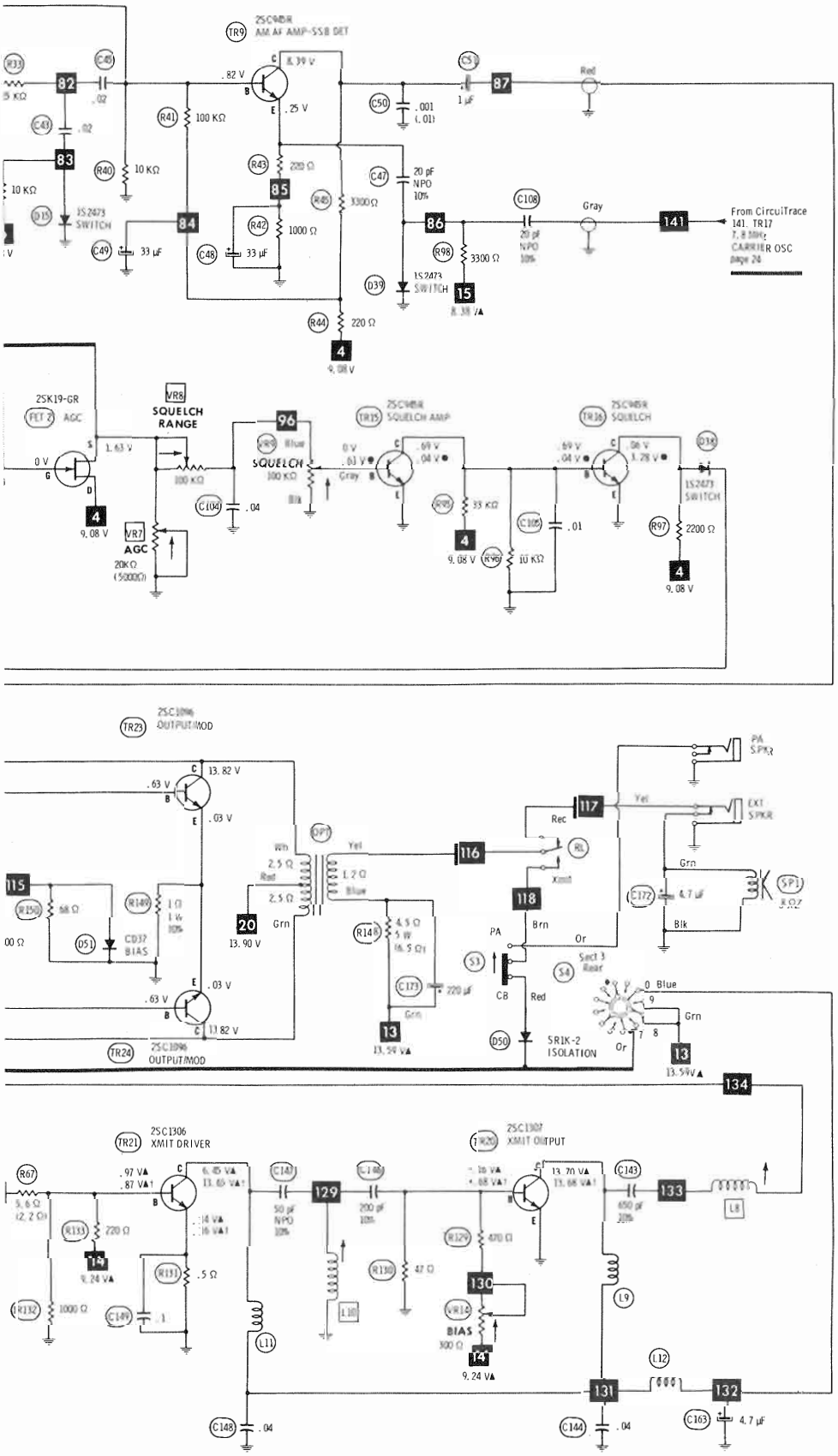
TR9
2SC948R
AM AF AMP-SSB DET
82
83
84
85
86
87
141
From CircuiTrace
141. TR17
7.8 MHz
CARRIER OSC
page 24
1S2473
SWITCH
D39
15
4
9.08 V
2SK19-GR
FET 2
AGC
VR8
SQUELCH
RANGE
96
TR15
2SC948R
SQUELCH AMP
TR16
2SC948R
SQUELCH
VR7
AGC
20KΩ
(5000Ω)
TR23
2SC1096
OUTPUT/MOD
TR24
2SC1096
OUTPUT/MOD
115
116
117
118
20
13
13.59 VA
134
PA
SPKR
EXT
SPKR
SP1
8 Ω
CB
SR1K-2
ISOLATION
TR21
2SC1306
XMIT DRIVER
TR20
2SC1307
XMIT OUTPUT
129
130
131
132
133
14
9.24 VA
BIAS
L8
L9
L10
L11
L12
C148
.04
C144
.04
C163
4.7 µF

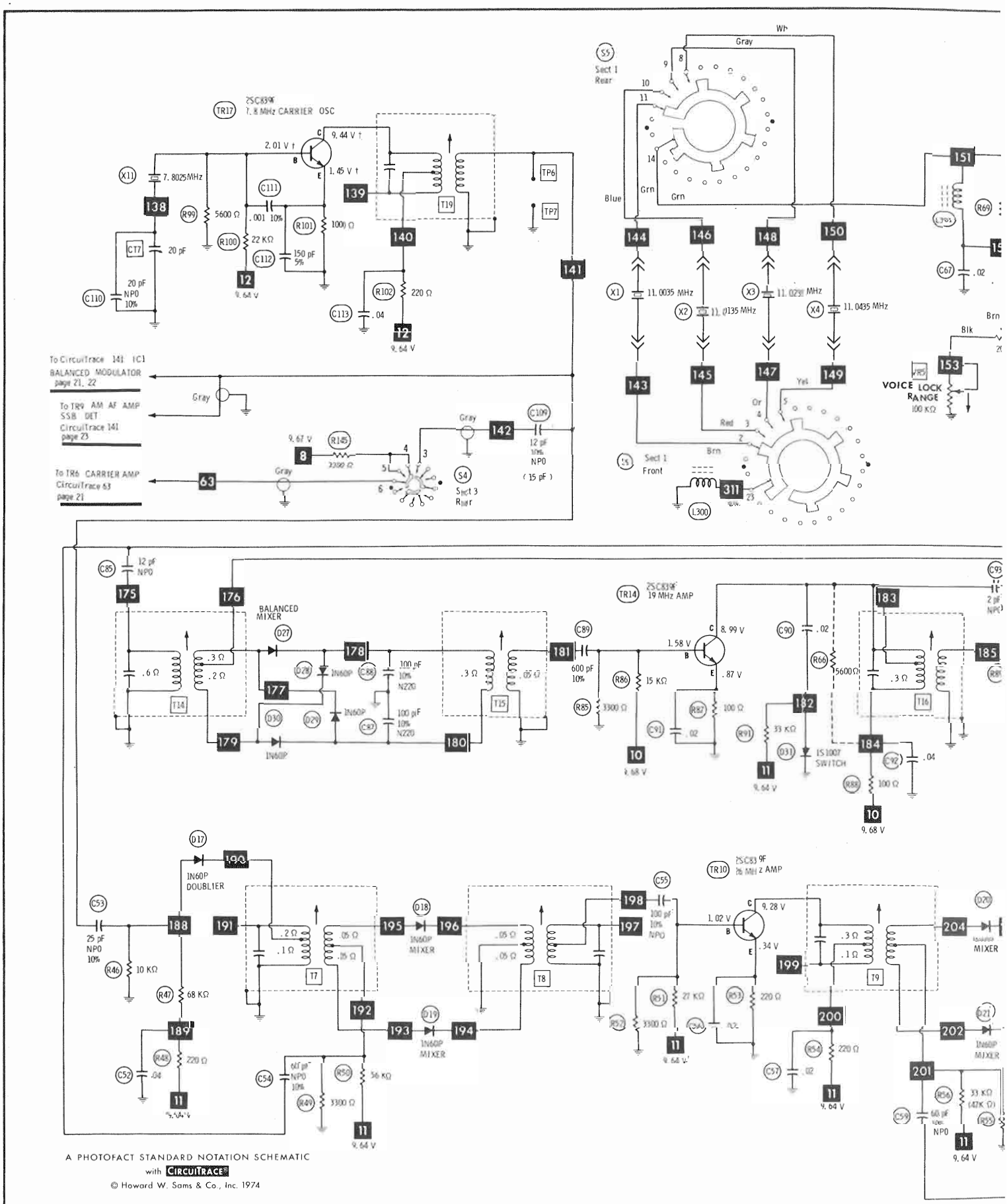

A PHOTOFACT STANDARD NOTATION SCHEMATIC
with CIRCUITRACE®

SEE NOTES ON PAGE 20

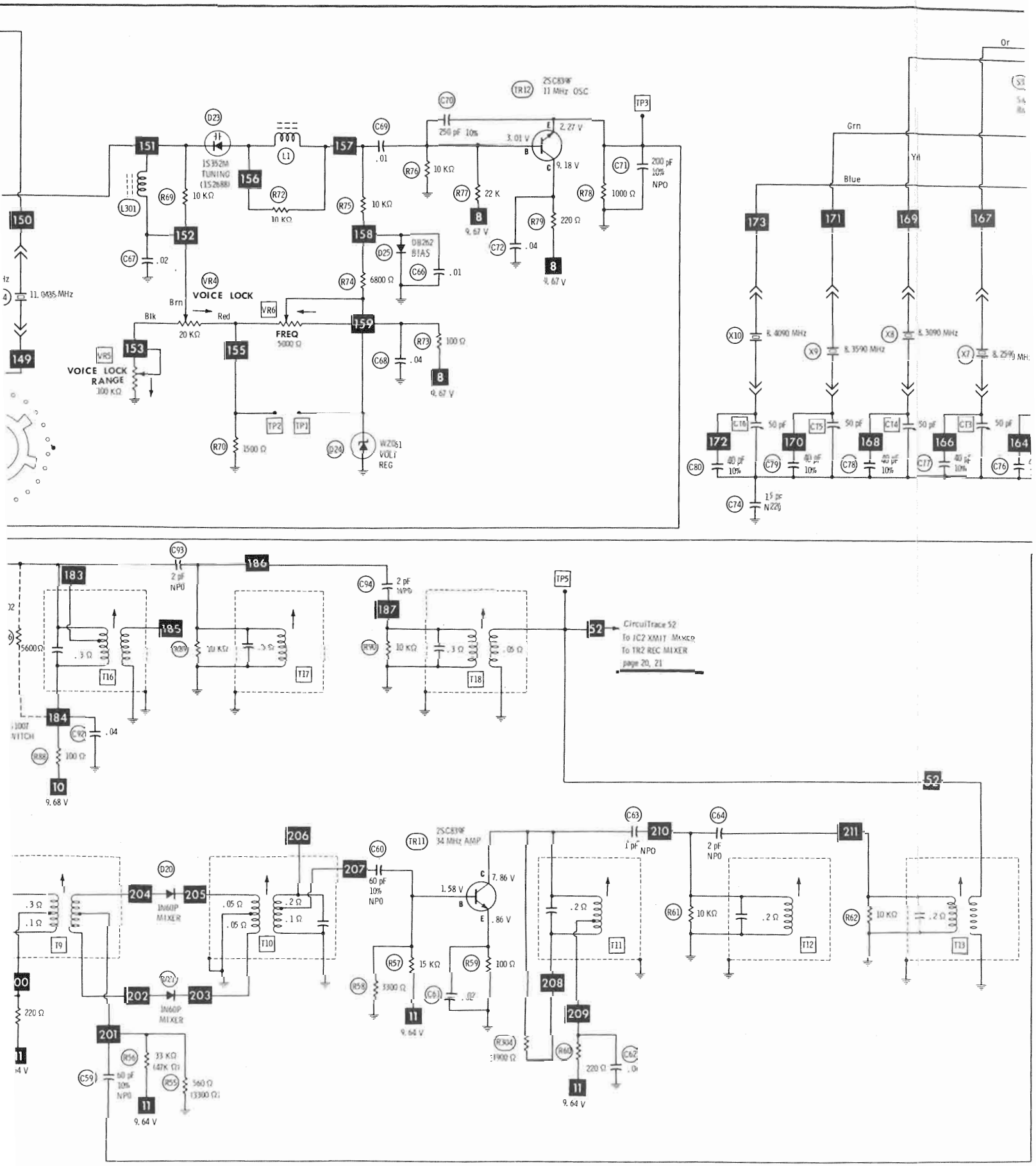
2SC839F
11 MHz OSC
TR12
C70
250 pF 10%
3.01 V
2.27 V
9.18 V
TP3
D23
1S352M
TUNING
(1S2688)
L1
L301
151
156
157
C69
.01
R76
10 KΩ
R77
22 K
R78
1000 Ω
C71
200 pF
10%
NPO
R69
10 KΩ
R72
10 KΩ
R75
10 KΩ
150
152
158
D25
DB262
BIAS
C66
.01
R79
220 Ω
C72
.04
8
9.67 V
C67
.02
VR4
VOICE LOCK
11.0435 MHz
Brn
Blk
Red
20 KΩ
VR6
FREQ
5000 Ω
159
R74
6800 Ω
R73
100 Ω
C68
.04
149
VR5
153
155
VOICE LOCK
RANGE
100 KΩ
TP2
TP1
R70
1500 Ω
D24
WZ061
VOLT
REG
Or
Grn
Yel
Blue
173
171
169
167
X10
8.4090 MHz
X9
8.3590 MHz
X8
8.3090 MHz
X7
172
170
168
166
164
C16
50 pF
C15
50 pF
C14
50 pF
C13
50 pF
C80
40 pF
10%
C79
40 pF
10%
C78
40 pF
10%
C77
40 pF
10%
C76
C74
15 pF
NPO
C93
2 pF
NPO
183
186
C94
2 pF
NPO
187
TP5
185
R90
10 KΩ
.3 Ω
.05 Ω
T16
T17
T18
52
CircuitTrace 52
To JC2 XMIT Mixer
To TR2 REC MIXER
page 20, 21
184
C92
.04
R88
100 Ω
10
9.68 V
206
C60
60 pF
10%
NPO
TR11
2SC839F
34 MHz AMP
C63
1 pF
NPO
210
C64
2 pF
NPO
211
D20
204
205
1N60P
MIXER
.05 Ω
.2 Ω
.1 Ω
T9
T10
207
1.58 V
7.86 V
.86 V
R61
10 KΩ
R62
10 KΩ
T11
T12
T13
R57
15 KΩ
R59
100 Ω
R58
3300 Ω
C61
.02
11
9.64 V
208
209
202
203
1N60P
MIXER
220 Ω
201
R56
33 KΩ
(47K Ω)
R55
560 Ω
(3300 Ω)
C59
60 pF
10%
NPO
11
9.64 V
R60
220 Ω
C62
11
9.64 V

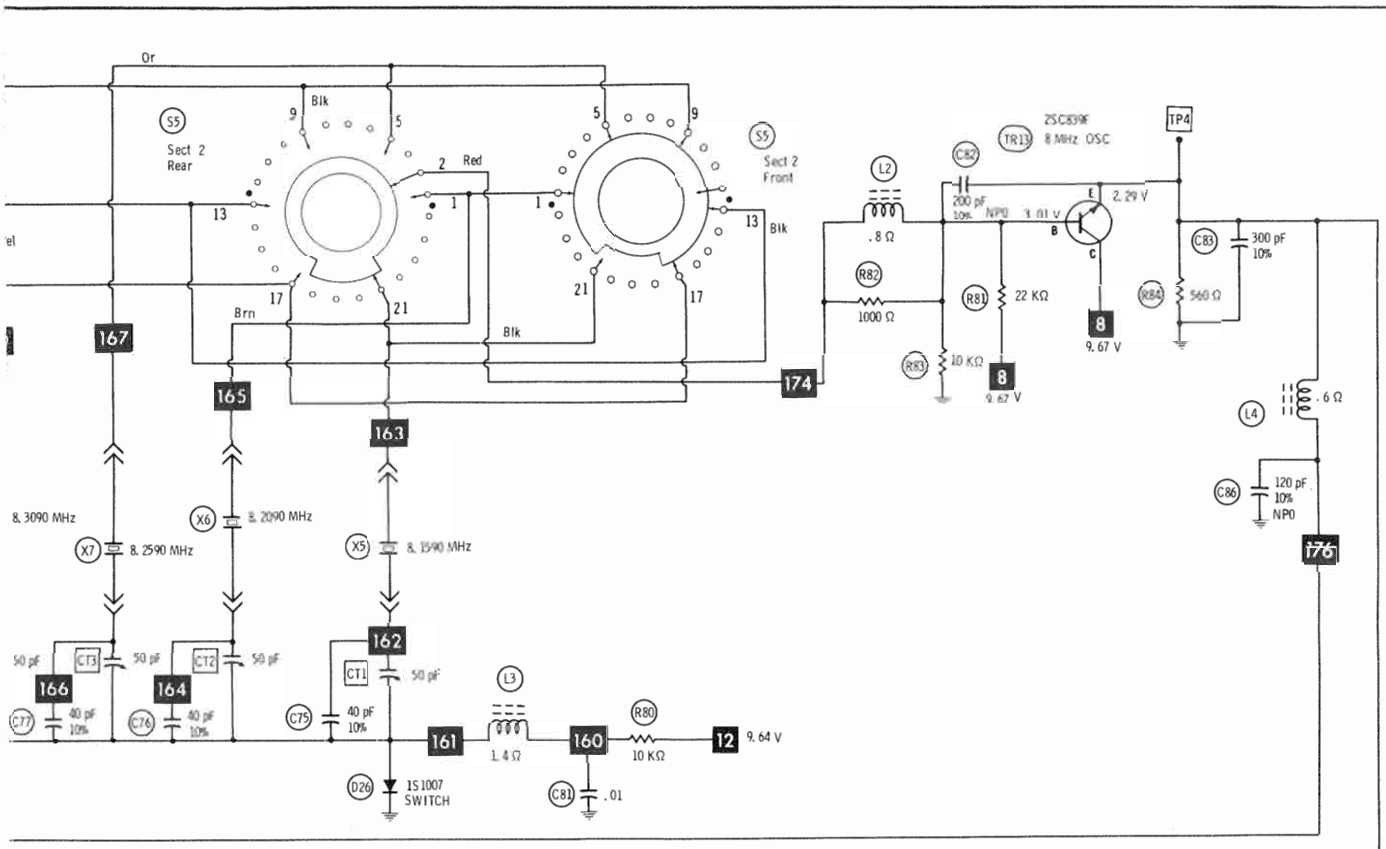

S5 Shown on CH.
No. 1
S4 Shown on USB
Switch sequence
1. AM
2. USB
3. LSB

Terminal Guides

TR10, TR11, TR12
TR13, TR14, TR17

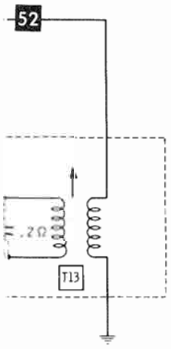

Chan	Crystal Complement	Chan	Crystal Complement	Chan	Crystal Complement	Chan	Crystal Complement
1	X1 X5	7	X3 X6	13	X1 X8	19	X3 X9
2	X2 X5	8	X4 X6	14	X2 X8	20	X4 X9
3	X3 X5	9	X1 X7	15	X3 X8	21	X1 X10
4	X4 X5	10	X2 X7	16	X4 X8	22	X2 X10
5	X1 X6	11	X3 X7	17	X1 X9	23	X4 X10
6	X2 X6	12	X4 X7	18	X2 X9		

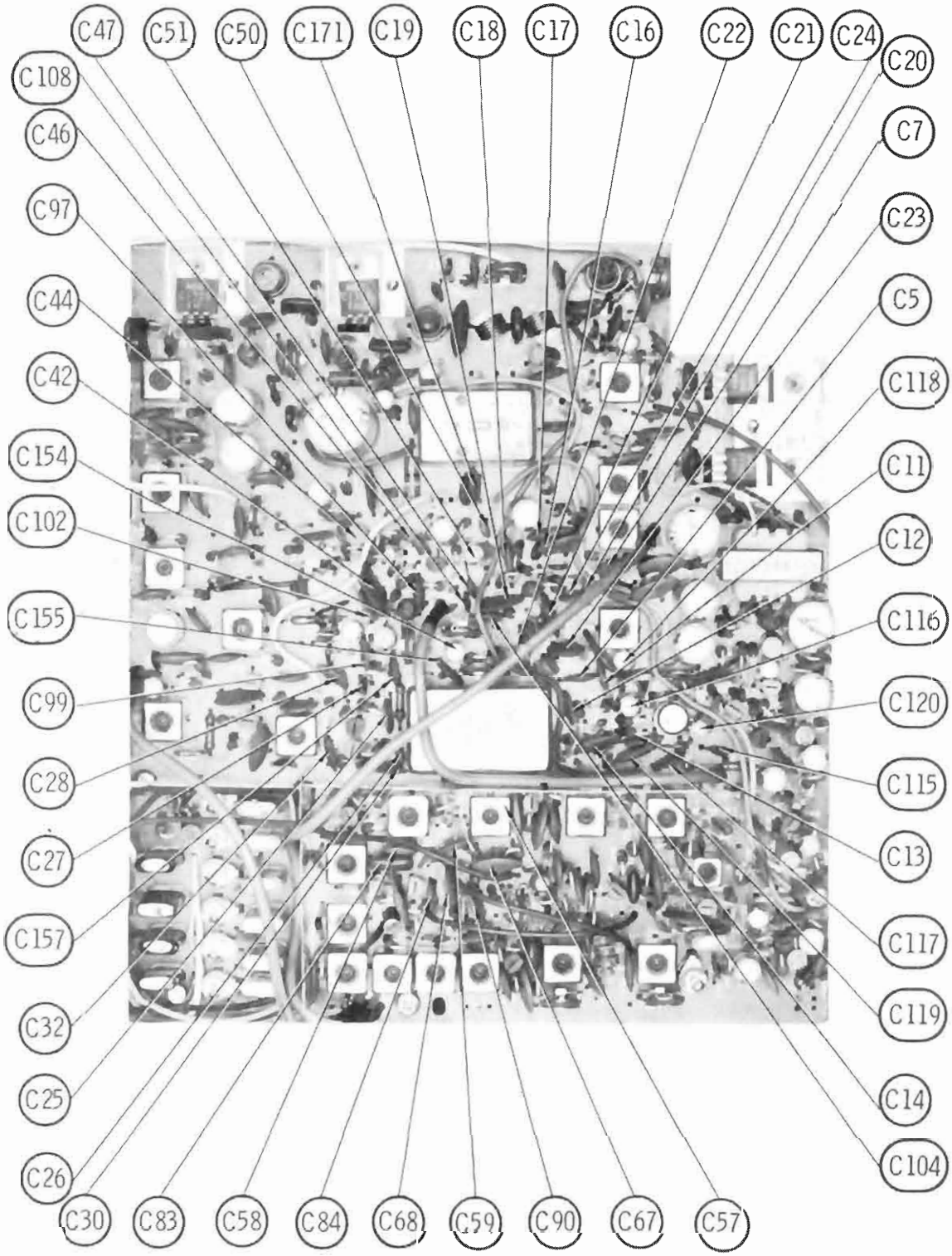
C47
C51
C50
C171
C19
C18
C17
C16
C22
C21
C24
C20
C108
C46
C7
C97
C23
C44
C5
C42
C118
C154
C11
C102
C12
C155
C116
C99
C120
C28
C115
C27
C13
C157
C117
C32
C119
C25
C14
C26
C104
C30
C83
C58
C84
C68
C59
C90
C67
C57

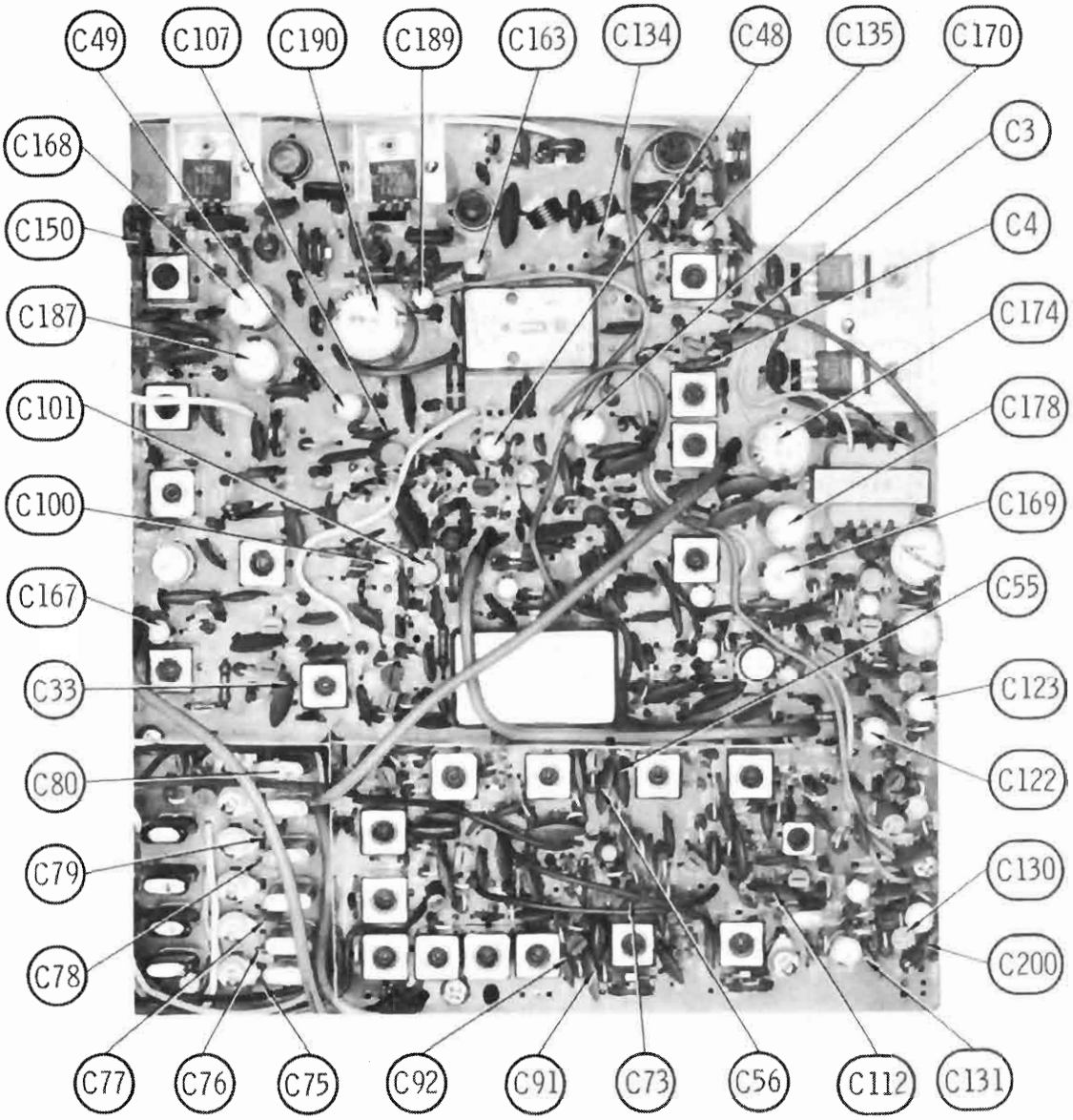
C49
C107
C190
C189
C163
C134
C48
C135
C170
C168
C3
C150
C4
C187
C174
C101
C178
C100
C169
C167
C55
C33
C123
C80
C122
C79
C130
C78
C200
C77
C76
C75
C92
C91
C73
C56
C112
C131

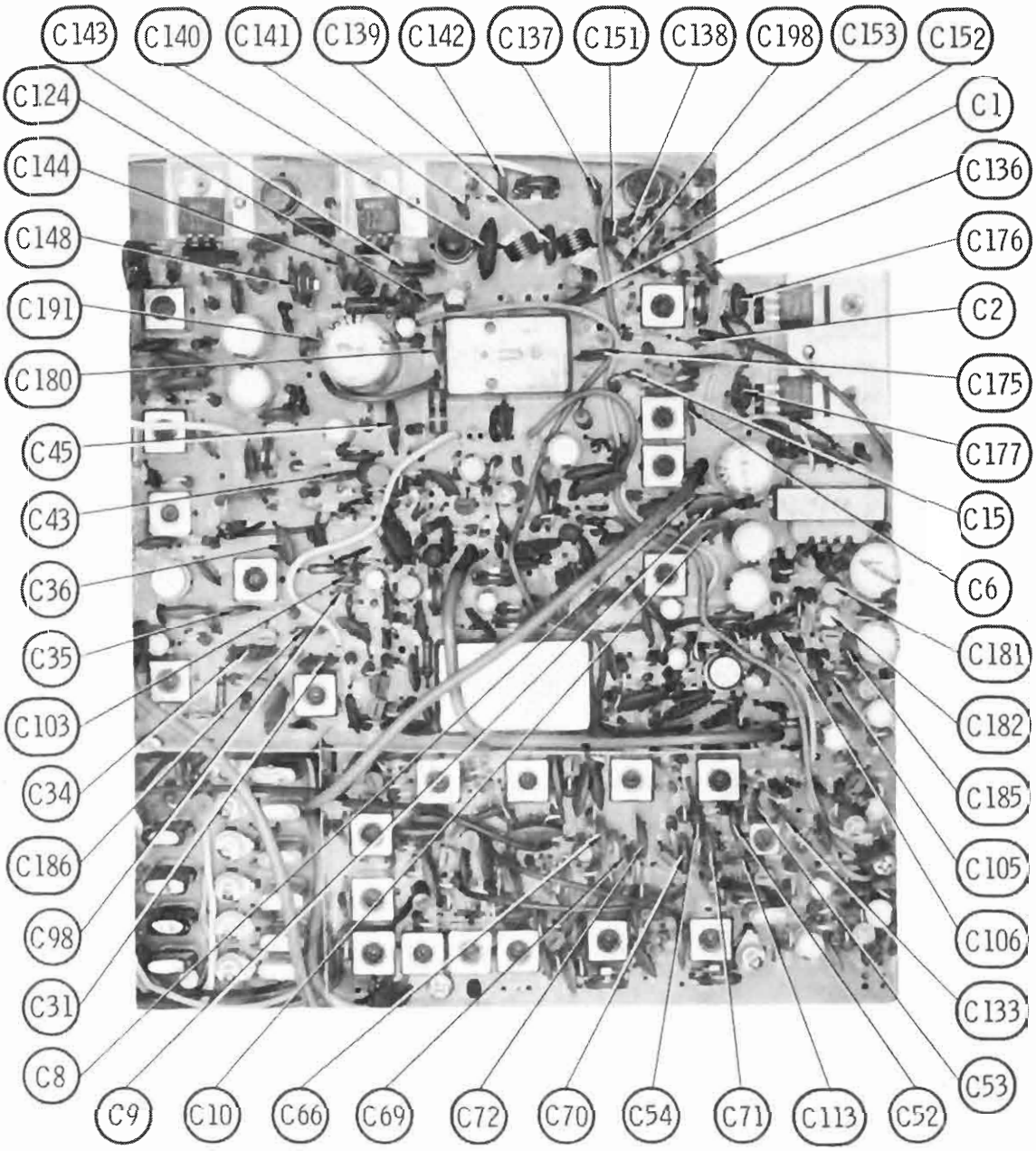
C143
C140
C141
C139
C142
C137
C151
C138
C198
C153
C152
C124
C144
C148
C191
C180
C45
C43
C36
C35
C103
C34
C186
C98
C31
C8
C9
C10
C66
C69
C72
C70
C54
C71
C113
C52
C53
C133
C106
C105
C185
C182
C181
C6
C15
C177
C175
C2
C176
C136
C1

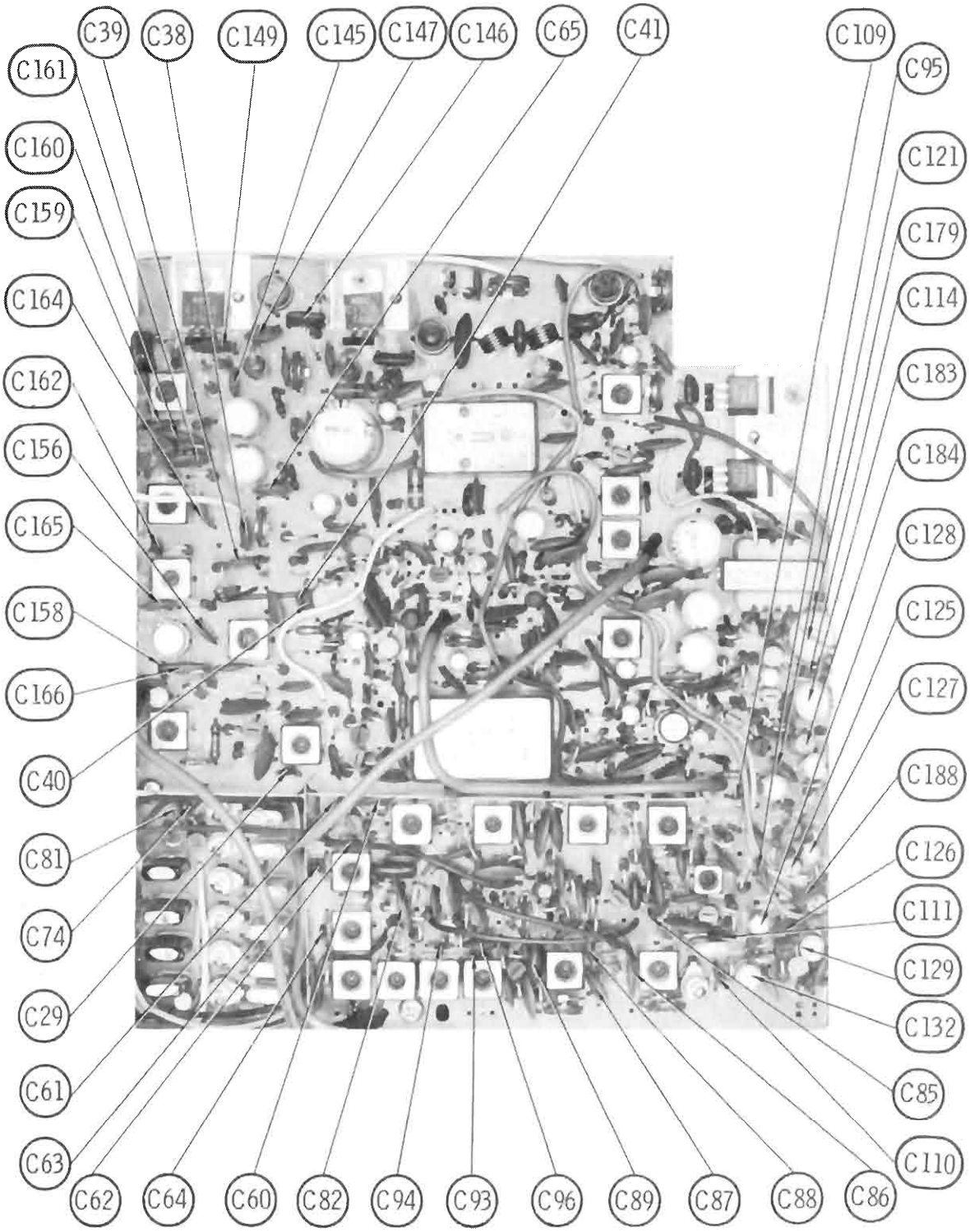
C39
C38
C149
C145
C147
C146
C65
C41
C109
C95
C161
C160
C121
C159
C179
C164
C114
C162
C183
C156
C184
C165
C128
C158
C125
C166
C127
C40
C188
C81
C126
C74
C111
C129
C29
C132
C61
C85
C63
C110
C62
C64
C60
C82
C94
C93
C96
C89
C87
C88
C86

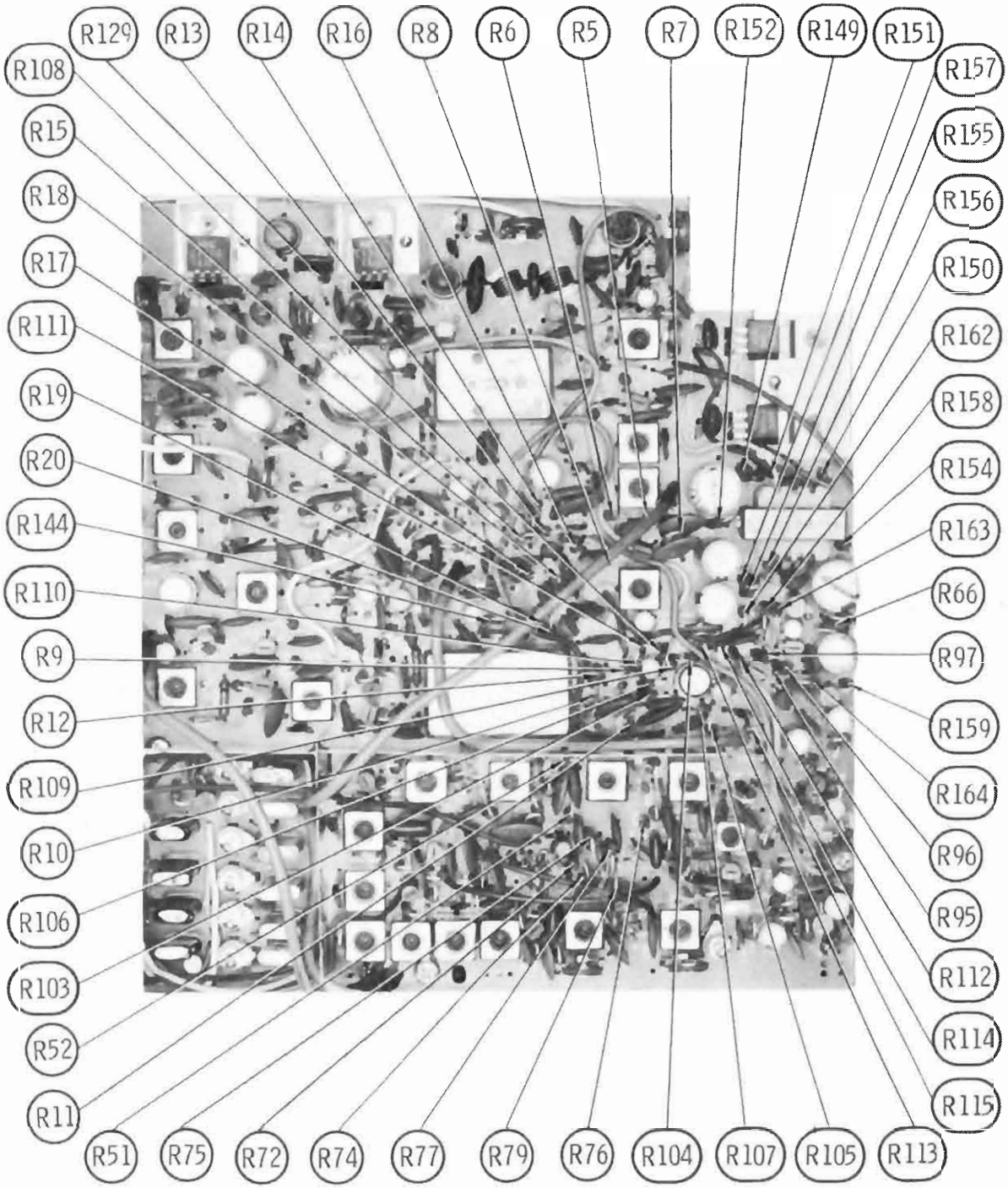
R129
R13
R14
R16
R8
R6
R5
R7
R152
R149
R151
R157
R155
R156
R150
R162
R158
R154
R163
R66
R97
R159
R164
R96
R95
R112
R114
R115
R113
R105
R107
R104
R76
R79
R77
R74
R72
R75
R51
R11
R52
R103
R106
R10
R109
R12
R9
R110
R144
R20
R19
R111
R17
R18
R15
R108

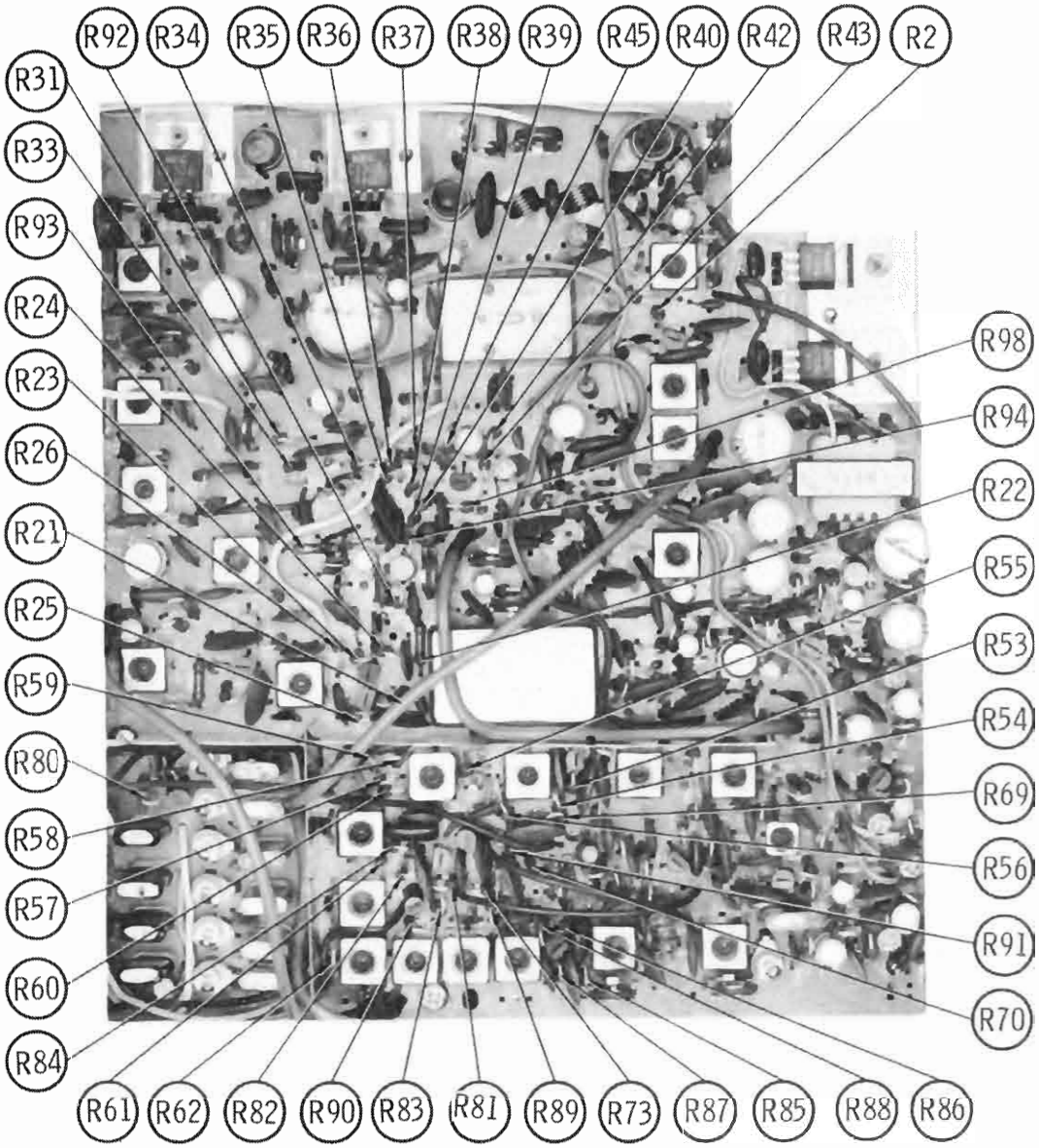
R92
R34
R35
R36
R37
R38
R39
R45
R40
R42
R43
R2
R31
R33
R93
R24
R23
R26
R21
R25
R59
R80
R58
R57
R60
R84
R98
R94
R22
R55
R53
R54
R69
R56
R91
R70
R61
R62
R82
R90
R83
R81
R89
R73
R87
R85
R88
R86

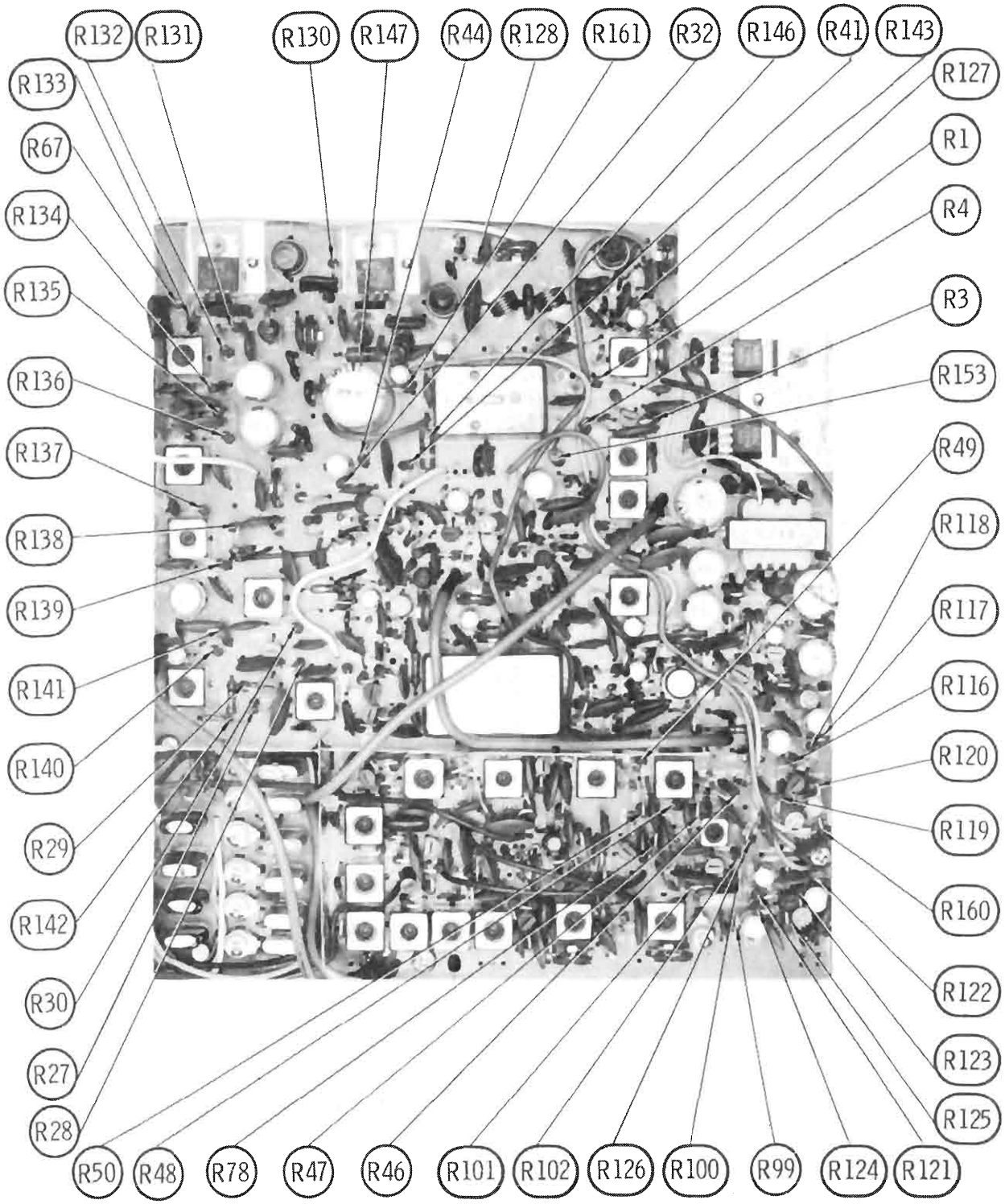
R132
R131
R130
R147
R44
R128
R161
R32
R146
R41
R143
R133
R67
R134
R135
R136
R137
R138
R139
R141
R140
R29
R142
R30
R27
R28
R127
R1
R4
R3
R153
R49
R118
R117
R116
R120
R119
R160
R122
R123
R125
R50
R48
R78
R47
R46
R101
R102
R126
R100
R99
R124
R121

PARTS LIST AND DESCRIPTION

(When ordering parts, state Model, Part Number, and Description.)

SEMICONDUCTORS

ITEM No.	TYPE / MFGR. No. / PART No.	REPLACEMENT DATA						
		GENERAL ELECTRIC PART No.	INTERNATIONAL RECTIFIER PART No.	MALLORY PART No.	MOTOROLA PART No.	RCA PART No.	SPRAGUE PART No.	SYLVANIA PART No.
D1	1N60P/150-006-9-001	1N60	1N60	PTC206	HEP135	SK3088		ECG 109
D2	1S2473/ 151-035-9-003	GE-300	D200	PTC214	HEPR0602	SK3100	RT218	ECG 177
D3	1S2473/ 151-035-9-003	GE-300	D200	PTC214	HEPR0602	SK3100	RT218	ECG 177
D4	1S2473/ 151-035-9-003	GE-300	D200	PTC214	HEPR0602	SK3100	RT218	ECG 177
D5	1N60/150-001-9-005	1N60	1N60	PTC206	HEP135	SK3088		ECG 109
D6	1N60/150-001-9-005	1N60	1N60	PTC206	HEP135	SK3088		ECG 109
D7	1S2472/ 151-045-9-002	1N60	1N60	PTC206	HEP135	SK3088		ECG 109
D8	1N60/150-001-9-005	1N60	1N60	PTC206	HEP135	SK3088		ECG 109
D9	1N60/150-001-9-005	1N60	1N60	PTC206	HEP135	SK3088		ECG 109
D10	1S2473/ 151-035-9-003	GE-300	D200	PTC214	HEPR0602	SK3100	RT218	ECG 177
D11	1N60/150-001-9-005	1N60	1N60	PTC206	HEP135	SK3088		ECG 109
D12	1N60/150-001-9-005	1N60	1N60	PTC206	HEP135	SK3088		ECG 109
D13	1N60/150-001-9-005	1N60	1N60	PTC206	HEP135	SK3088		ECG 109
D14	1N60/150-001-9-005	1N60	1N60	PTC206	HEP135	SK3088		ECG 109
D15	1S2473/ 151-035-9-003	GE-300	D200	PTC214	HEPR0602	SK3100	RT218	ECG 177
D16	1S1693/ 151-046-9-001	GE-504A	8D4 or 5A4D	PTC201 or PTC202	HEPR0052	SK3030 or SK3031	RT213 or RT214	ECG 116 or ECG 117
D17	1N60P/150-006-9-001	1N60	1N60	PTC206	HEP135	SK3088		ECG 109
D18	1N60P/150-006-9-001	1N60	1N60	PTC206	HEP135	SK3088		ECG 109
D19	1N60P/150-006-9-001	1N60	1N60	PTC206	HEP135	SK3088		ECG 109
D20	1N60P/150-006-9-001	1N60	1N60	PTC206	HEP135	SK3088		ECG 109
D21	1N60P/150-006-9-001	1N60	1N60	PTC206	HEP135	SK3088		ECG 109
D22	1S2473/ 151-035-9-003	GE-300	D200	PTC214	HEPR0602	SK3100	RT218	ECG 177
D23	1S352M/ 154-001-9-001	GE-90 (8)	D201 (8)		HEPR2503(8)	SK3126 (8)		
D24	WZ-061/ 152-052-9-002 6.2 V Zener	GEZD-6.2	Z-1204	PTC503	HEPZ0408	SK3058	RT237	ECG 5070
D25	KB-262/ 151-032-9-004	GE-300	D200	PTC214	HEPR0602	SK3100	RT218	ECG 177
D26	1S1007/ 151-045-9-003	GE-511	D172	PTC216	HEPR3012	SK3130		ECG 506
D27	1N60P/150-006-9-001	1N60	1N60	PTC206	HEP135	SK3088		ECG 109
D28	1N60P/150-006-9-001	1N60	1N60	PTC206	HEP135	SK3088		ECG 109
D29	1N60P/150-006-9-001	1N60	1N60	PTC206	HEP135	SK3088		ECG 109
D30	1N60P/150-006-9-001	1N60	1N60	PTC206	HEP135	SK3088		ECG 109
D31	1S1007/ 151-045-9-003	GE-511	D172	PTC216	HEPR3012	SK3130		ECG 506
D32	1N60/150-001-9-005	1N60	1N60	PTC206	HEP135	SK3088		ECG 109
D33	1S2473/ 151-035-9-003	GE-300	D200	PTC214	HEPR0602	SK3100	RT218	ECG 177
D34	1S2473/ 151-035-9-003	GE-300	D200	PTC214	HEPR0602	SK3100	RT218	ECG 177
D35	1S2473/ 151-035-9-003	GE-300	D200	PTC214	HEPR0602	SK3100	RT218	ECG 177
D36	1N60/150-001-9-005	1N60	1N60	PTC206	HEP135	SK3088		ECG 109
D37	1S2473/ 151-035-9-003	GE-300	D200	PTC214	HEPR0602	SK3100	RT218	ECG 177
D38	1S2473/ 151-035-9-003							
D39	1S2473/ 151-035-9-003							
D40	1N60/150-001-9-005	1N60	1N60	PTC206	HEP135	SK3088		ECG 109
D41	1N60/150-001-9-005	1N60	1N60	PTC206	HEP135	SK3088		ECG 109
D42	1N60/150-001-9-005	1N60	1N60	PTC206	HEP135	SK3088		ECG 109
D43	KB-262/ 151-032-9-004	GE-300	D200	PTC214	HEPR0602	SK3100	RT218	ECG 177
D44	1N60/150-001-005	1N60	1N60	PTC206	HEP135	SK3088		ECG 109
D45	1N60/150-001-005	1N60	1N60	PTC206	HEP135	SK3088		ECG 109
D46	1S2473/ 151-035-9-003	GE-300	D200	PTC214	HEPR0602	SK3100	RT218	ECG 177
D47	1S2473/ 151-035-9-001	GE-300	D200	PTC214	HEPR0602	SK3100	RT218	ECG 177
D48	CZ-092/ 152-051-9-001 9.2 V Zener	GEZD-9.1	Z-1210	PTC505	HEPZ0412	SK3060	RT240	ECG 139
D49	CZ-092/ 152-051-9-001 9.2 V Zener	GEZD-9.1	Z-1210	PTC505	HEPZ0412	SK3060	RT240	ECG 139
D50	SR1K-2/ 151-045-9-001	GE-504A	8D4 or 5A4D	PTC201 or PTC202	HEPR0052	SK3030 or SK3031	RT213 or RT214	ECG 116 or ECG 117
D51	CD-37/150-040-9-002	GE-300	D200	PTC214	HEPR0602	SK3100	RT218	ECG 177
D52	1S2473/ 151-035-9-003	GE-300	D200	PTC214	HEPR0602	SK3100	RT218	ECG 177
D53	1S2473/ 151-035-9-003	GE-300	D200	PTC214	HEPR0602	SK3100	RT218	ECG 177
D54	CZ-092/ 152-051-9-001 9.2 V Zener	GEZD-9.1	Z-1210	PTC505	HEPZ0412	SK3060	RT240	ECG 139
D55	WZ-081/ 152-054-9-001 8.1 V Zener	GE-X11	Z-1208	ZB8.2	HEPZ0411	SK3059	RT239	ECG 5072
D56	SR1K-2/ 151-045-9-001	GE-504A	8D4 or 5A4D	PTC201 or PTC202	HEPR0052	SK3030 or SK3031	RT213 or RT214	ECG 116 or ECG 117

PARTS LIST AND DESCRIPTION (CONTINUED)

(When ordering parts, state Model, Part Number, and Description.)

SEMICONDUCTORS (cont)

ITEM No.	TYPE / MFGR. No. / PART No.	REPLACEMENT DATA						
		GENERAL ELECTRIC PART No.	INTERNATIONAL RECTIFIER PART No.	MALLORY PART No.	MOTOROLA PART No.	RCA PART No.	SPRAGUE PART No.	SYLVANIA PART No.
D57	WZ-061/ 152-052-9-002 6.2 V Zener	GEZD-6.2	Z-1204	PTC503	HEPZ0408	SK3058	RT237	ECG 137
D58	BZ-162/ 152-057-9-001 16.2 V Zener	GEZD-15	Z-1214	ZB16	HEPZ0419	SK3063	RT246	ECG 5075
D59	SR1K-2/ 151-045-9-001	GE-504A	8D4 or 5A4D	PTC201 or PTC202	HEPR0052	SK3030 or SK3031	RT213 or RT214	ECG 116 or ECG 117
D60	SR1K-2/ 151-045-9-001	GE-504A	8D4 or 5A4D	PTC201 or PTC202	HEPR0052	SK3030 or SK3031	RT213 or RT214	ECG 116 or ECG 117
D61	SR1K-2/ 151-045-9-001	GE-504A	8D4 or 5A4D	PTC201 or PTC202	HEPR0052	SK3030 or SK3031	RT213 or RT214	ECG 116 or ECG 117
D62	SR1K-2/ 151-045-9-001	GE-504A	8D4 or 5A4D	PTC201 or PTC202	HEPR0052	SK3030 or SK3031	RT213 or RT214	ECG 116 or ECG 117
FET-1	2SK30GR/ 182-014-9-002	GE-FET-1	FE-100	PTC151	HEP801	SK3112	RT176	ECG 133
FET-2	2SK19GR/ 182-014-9-002	GE-FET-1	FE-100	PTC151	HEP801	SK3112	RT176	ECG 133
IC-1	MC1496G/ 307-047-9-001							
IC-2	TA7045M/ 307-047-9-002							ECG 724
TR1	2SC839F/ 176-042-9-002	GE-17	TR-24	PTC121	HEP728	SK3018	RT107	ECG 107
TR2	2SC839F/ 176-042-9-002	GE-17	TR-24	PTC121	HEP728	SK3018	RT107	ECG 107
TR3	2SA733H,L,P/ 177-012-9-001	GE-65	TR-31	PTC131	HEP708	SK3138	RT120	ECG 159
TR4	2SC839F/ 176-042-9-002	GE-17	TR-24	PTC121	HEP728	SK3018	RT107	ECG 107
TR5	2SC839F/ 176-042-9-002	GE-17	TR-24	PTC121	HEP728	SK3018	RT107	ECG 107
TR6	2SC839F/ 176-042-9-002	GE-17	TR-24	PTC121	HEP728	SK3018	RT107	ECG 107
TR7	2SC839F/ 176-042-9-002	GE-17	TR-24	PTC121	HEP728	SK3018	RT107	ECG 107
TR8	2SC839F/ 176-042-9-002	GE-17	TR-24	PTC121	HEP728	SK3018	RT107	ECG 107
TR9	2SC945T,R/ 176-042-9-003	GE-20	TR-21	PTC136	HEP728	SK3124	RT102	ECG 123A
TR10	2SC839F/ 176-042-9-002	GE-17	TR-24	PTC121	HEP728	SK3018	RT107	ECG 107
TR11	2SC837F/ 176-042-9-002	GE-17	TR-24	PTC121	HEP728	SK3018	RT107	ECG 107
TR12	2SC839F/ 176-042-9-002	GE-17	TR-24	PTC121	HEP728	SK3018	RT107	ECG 107
TR13	2SC839F/ 176-042-9-002	GE-17	TR-24	PTC121	HEP728	SK3018	RT107	ECG 107
TR14	2SC839F/ 176-042-9-002	GE-17	TR-24	PTC121	HEP728	SK3018	RT107	ECG 107
TR15	2SC945T,R/ 176-042-9-003	GE-20	TR-21	PTC136	HEP728	SK3124	RT102	ECG 123A
TR16	2SC945T,R/ 176-042-9-003	GE-20	TR-21	PTC136	HEP728	SK3124	RT102	ECG 123A
TR17	2SC839F/ 176-042-9-002	GE-17	TR-24	PTC121	HEP728	SK3018	RT107	ECG 107
TR18	2SC945T,R/ 176-042-9-003	GE-20	TR-21	PTC136	HEP728	SK3124	RT102	ECG 123A
TR19	2SC945T,R/ 176-042-9-003	GE-20	TR-21	PTC136	HEP728	SK3124	RT102	ECG 123A
TR20	2SC1307/ (1) 172-024-9-003	GE-66		PTC110				ECG 236
TR21	2SC1306/ (2) 172-024-9-002	GE-66	TR-55	PTC110				ECG 235
TR22	2SC710(C)/ 176-047-9-002	GE-10	TR-24	PTC126	HEP723	SK3018	RT107	ECG 107
TR23	2SC1096/ (3) 172-024-9-004	GE-28	TR-55	PTC110	HEPS5003	SK3054	RT154	ECG 186
TR24	2SC1096/ (3) 172-024-9-004	GE-28	TR-55	PTC110	HEPS5003	SK3054	RT154	ECG 186
TR25	2SC735(Y)/ 176-047-9-001	GE-63	TR-21	PTC123	HEP53	SK3124	RT102	ECG 123A
TR26	2SC945T,R/ 176-042-9-003	GE-20	TR-21	PTC136	HEP728	SK3124	RT102	ECG 123A
TR27	2SC793Y/ (4) 172-024-9-005	GE-14	TR-61	PTC118	HEP704	SK3036	RT131	ECG 130
TR28	2SC945R/ 176-042-9-003	GE-20	TR-21	PTC136	HEP728	SK3124	RT102	ECG 123A
TR29	2SC1096/ 172-024-9-004	GE-28	TR-55	PTC110	HEPS5003	SK3054	RT154	ECG 186

(1) Rating 25 Watt @ 8 Amp.
(2) Rating 12 Watt @ 3 Amp.
(3) Rating 10 Watt @ 2 Amp.
(4) Rating 60 Watt @ 7 Amp.
(8) Varactor

PARTS LIST AND DESCRIPTION (CONTINUED)

(When ordering parts, state Model, Part Number, and Description.)

ELECTROLYTIC CAPACITORS

ITEM No.	RATING		REPLACEMENT DATA					
			MFGR. PART No.	ARCO PART No.	CENTRALAB PART No.	CORNELL-DUBILIER PART No.	MALLORY PART No.	SPRAGUE PART No.
C37	1	50 V	022-122-9-001	RME-A-J-001	EP50-1	PC1-50	MTV1CB50	EV-1615
C44	.1	25 V	022-122-9-013				TDC104M050EL	SD50-R109
C48	33	10 V	022-122-9-005	ME-3-D-035	EP15-25	PC30-25	VTT33A10	EV-1125
	33	6.4 V	022-122-9-006	ME-3-D-035	EP15-25	PC30-25	VTT33A10	EV-1125
C49	33	16 V		ME-3-E-035	EP15-25	PC30-25	MTV30CB25	EV-1325
	33	10 V	022-122-9-005	ME-3-D-035	EP15-25	PC30-25	VTT33A10	EV-1125
C51	1	50 V	022-122-9-001	RME-A-J-001	EP50-1	PC1-50	MTV1CB50	EV-1615
C100	1	50 V	022-122-9-001	RME-A-J-001	EP50-1	PC1-50	MTV1CB50	EV-1615
C101	.1	25 V	022-122-9-013				TDC104M050EL	SD50-R109
C116	2.2	25 V	022-122-9-002	RME-A-G-002	EP30-2	PC2-100	VTT2R2A50	EV-1317
C118	22	10 V	022-122-9-004	RME-B-D-025	EP15-25	PC25-25	MTV25CB35	EV-1125
C120	10	16 V	022-120-9-001	RME-B-E-010	EP15-10	PC10-25	VTT10A25	EV-1222
C122	33	16 V		ME-3-E-035	EP15-25	PC30-25	MTV30CB25	EV-1325
	33	10 V	022-122-9-005	ME-3-D-035	EP15-25	PC30-25	VTT33A10	EV-1125
C123	33	10 V	022-122-9-005	ME-3-D-035	EP15-25	PC30-25	VTT33A10	EV-1125
C125	1	50 V	022-122-9-001	RME-A-J-001	EP50-1	PC1-50	MTV1CB50	EV-1615
C127	1	50 V	022-122-9-001	RME-A-J-001	EP50-1	PC1-50	MTV1CB50	EV-1615
C128	1	50 V	022-122-9-001	RME-A-J-001	EP50-1	PC1-50	MTV1CB50	EV-1615
C129	33	10 V	022-122-9-005	ME-3-D-035	EP15-25	PC30-25	VTT33A10	EV-1125
	33	6.4 V	022-122-9-006	ME-3-D-035	EP15-25	PC30-25	VTT33A10	EV-1125
C130	1	50 V	022-122-9-001	RME-A-J-001	EP50-1	PC1-50	MTV1CB50	EV-1615
C132	47	10 V	022-120-9-002	RME-D-D-050	EP15-50	PC50-10	MTV50CB15	EV-1226
C134	4.7	25 V	022-122-9-003	RME-A-G-005	EP30-5	PC5-50	VTT4R7A50	EV-1319
C135	10	16 V	022-120-9-001	RME-B-E-010	EP15-10	PC10-25	VTT10A25	EV-1222
C154	10	16 V	022-120-9-001	RME-B-E-010	EP15-10	PC10-25	VTT10A25	EV-1222
C163	4.7	25 V	022-122-9-003	RME-A-G-005	EP30-5	PC5-50	VTT4R7A50	EV-1319
C167	4.7	25 V	022-122-9-003	RME-A-G-005	EP30-5	PC5-50	VTT4R7A50	EV-1319
C168	220	10 V	022-122-9-009	RME-G-D-250	EP15-250	PC250-10	MTV250DB10	EV-1145
C169	220	16 V	022-122-9-008	RME-J-E-250	EP15-250	PC250-25	MTV250DE15	EV-1245
C170	33	16 V		ME-3-E-035	EP15-25	PC30-25	MTV30CB25	EV-1325
	33	10 V	022-122-9-005	ME-3-D-035	EP15-25	PC30-25	VTT33A10	EV-1125
C172	4.7	25 V	022-122-9-003	RME-A-G-005	EP30-5	PC5-50	VTT4R7A50	EV-1319
C173	220	25 V	022-122-9-007	RME-K-G-250	EP30-250	PC250-25	MTV250DJ25	EV-1345
C174	470	16 V	022-099-9-006	RME-L-E-500	EP15-500	PC500-16	MTV500DN15	EV-1250
C178	220	16 V	022-122-9-008	RME-J-E-250	EP15-250	PC250-25	MTV250DE15	EV-1245
C179	470	10 V		RME-K-D-500	EP15-500	PC500-16	MTV500DN15	EV-1150
	470	6.3 V	022-122-9-014	RME-J-B-500	EP6-500	PC500-16	MTV500DE6	EV-1050
C181	.1	25 V	022-122-9-013				TDC104M050EL	SD50-R109
C182	1	50 V	022-122-9-001	RME-A-J-001	EP50-1	PC1-50	MTV1CB50	EV-1615
C183	220	6.3 V	022-122-9-010	RME-F-B-250	EP6-250	PC250-10	MTV250DB10	EV-1145
C184	1	50 V	022-122-9-001	RME-A-J-001	EP50-1	PC1-50	MTV1CB50	EV-1615
C187	330	10 V	022-122-9-011	ME-B-E-250	EP15-250	WBR300-35	MTA300G50	EV-1245
C189	10	16 V	022-120-9-001	RME-B-E-010	EP15-10	PC10-25	VTT10A25	EV-1222
C190	1000	25 V	022-122-9-012	RME-P-G-1000	EP30-1000	WBR1000-25	MTA1000G25	EV-1360
C193	220	16 V	022-122-9-008	RME-J-E-250	EP15-250	PC250-25	MTV250DE15	EV-1245
C194	2200	25 V	022-122-9-015	ME-G2000		WBR2000-25	TC2520A	TVA-1213.5

CAPACITORS

ITEM No.	RATING			MFGR. PART No.	REPLACEMENT DATA				
					ARCO/ELMENCO PART No.	CENTRALAB PART No.	CORNELL-DUBILIER PART No.	MALLORY PART No.	SPRAGUE PART No.
C1	.01				CCD-103	CK-103	MGP01	TA110	TG-S10
C2	.001				CCD-102	DD-102	GP1000	SM210	2SS-D10
C3	.02				CCD-203	CK-203	MGP02	TA120	TG-S20
C4	.02				CCD-203	CK-203	MGP02	TA120	TG-S20
C5	.04					DD-403		GP140	
C6	2	NPO				DTZ-2R2	NPO2P2	CN0522	10TCC-V22
C7	.01				CCD-103	CK-103	MGP01	TA110	TG-S10
C8	40		10%					CN0439	10TCC-Q39
C9	.02				CCD-203	CK-203	MGP02	TA120	TG-S20
C10	.02				CCD-203	CK-203	MGP02	TA120	TG-S20
C11	.01				CCD-103	CK-103	MGP01	TA110	TG-S10
C12	.01				CCD-103	CK-103	MGP01	TA110	TG-S10
C13	.01				CCD-103	CK-103	MGP01	TA110	TG-S10
C14	.02				CCD-203	CK-203	MGP02	TA120	TG-S20
C15	20	NPO	10%		CCT0-200	DTZ-20	NPO20	CN0420	10TCC-Q20
C16	.02				CCD-203	CK-203	MGP02	TA120	TG-S20
C17	.02				CCD-203	CK-203	MGP02	TA120	TG-S20
C18	.02				CCD-203	CK-203	MGP02	TA120	TG-S20
C19	.02				CCD-203	CK-203	MGP02	TA120	TG-S20
C20	5	NPO					NPO5		10TCC-V50
C21	.02				CCD-203	CK-203	MGP02	TA120	TG-S20
C22	.001				CCD-102	DD-102	GP1000	SM210	2SS-D10
C23	.04					DD-403		GP140	
C24	.005				CCD-502	CK-502	MGP005	TA250	TG-D50
C25	.01				CCD-103	CK-103	MGP01	TA110	TG-S10
C26	.001				CCD-102	DD-102	GP1000	SM210	2SS-D10
C27	20	NPO	10%		CCT0-200	DTZ-20	NPO20	CN0420	10TCC-Q20
C28	.04					DD-403		GP140	
C29	2	NPO				DTZ-2R2	NPO2P2	CN0522	10TCC-V22
C30	.02				CCD-203	CK-203	MGP02	TA120	TG-S20
C31	.04					DD-403		GP140	
C32	.04					DD-403		GP140	
C33	.02				CCD-203	CK-203	MGP02	TA120	TG-S20
C34	.02				CCD-203	CK-203	MGP02	TA120	TG-S20
C35	.04					DD-403		GP140	
C36	.01				CCD-103	CK-103	MGP01	TA110	TG-S10

PARTS LIST AND DESCRIPTION (CONTINUED)

(When ordering parts, state Model, Part Number, and Description.)

CAPACITORS (cont)

ITEM No.	RATING			MFGR. PART No.	REPLACEMENT DATA				
					ARCO/ELMENCO PART No.	CENTRALAB PART No.	CORNELL-DUBILIER PART No.	MALLORY PART No.	SPRAGUE PART No.
C38	.04					DD-403		GP140	
C39	.04					DD-403		GP140	
C40	20	NPO	10%		CCTO-200	DTZ-20	NPO20	CN0420	10TCC-Q20
C41	5	NPO					NPO5		10TCC-V50
C42	500		10%	023-048-9-007	DM-19-501J				
C43	.02				CCD-203	CK-203	MGP02	TA120	TG-S20
C45	.02				CCD-203	CK-203	MGP02	TA120	TG-S20
C46	.04					DD-403		GP140	
C47	20	NPO	10%		CCTO-200	DTZ-20	NPO20	CN0420	10TCC-Q20
C50	.01				CCD-103	CK-103	MGP01	TA110	TG-S10
C52	.04					DD-403		GP140	
C53	25	NPO	10%			DTZ-25		CN0425	10TCC-Q25
C54	60	NPO	10%	020-126-9-006					MS-46
C55	100		10%		CCTO-101	DTZ-100	NPO100	CN0310	10TCC-T10
C56	.02				CCD-203	CK-203	MGP02	TA120	TG-S20
C57	.02				CCD-203	CK-203	MGP02	TA120	TG-S20
C58	.04					DD-403		GP140	
C59	60	NPO	10%	020-126-9-006					MS-46
C60	60	NPO	10%	020-126-9-006					MS-46
C61	.02				CCD-203	CK-203	MGP02	TA120	TG-S20
C62	.04					DD-403		GP140	
C63	1	NPO						CN0510	10TCC-V10
C64	2	NPO				DTZ-2R2	NPO2P2	CN0522	10TCC-V22
C65	.04					DD-403		GP140	
C66	.01				CCD-103	CK-103	MGP01	TA110	TG-S10
C67	.02				CCD-203	CK-203	MGP02	TA120	TG-S20
C68	.04					DD-403		GP140	
C69	.01				CCD-103	CK-103	MGP01	TA110	TG-S10
C70	250				DM-19-251J				
C71	200		10%		CCD-201	DD-201	GP200	GP320	10TS-T20
C72	.04					DD-403		GP140	
C73	.04					DD-403		GP140	
C74	15	N220		020-126-9-010					10TCR-Q15
C75	40		10%					CN0439	10TCC-Q39
C76	40		10%					CN0439	10TCC-Q39
C77	40		10%					CN0439	10TCC-Q39
C78	40		10%					CN0439	10TCC-Q39
C79	40		10%					CN0439	10TCC-Q39
C80	40		10%					CN0439	10TCC-Q39
C81	.01				CCD-103	CK-103	MGP01	TA110	TG-S10
C82	200	NPO	10%		CCD-201	DD-201	GP200	GP320	10TS-T20
C83	300		10%		DM-19-301J	CPR-300J	CD15FD301J03	SX330	424ME3000J501
C84	.04					DD-403		GP140	
C85	12	NPO		020-126-9-002	DM-15-120J			SX412	
C86	120	NPO	10%		DM-15-121J	CPR-120J	CD15FD121J03	SX312	424MC1200J501
C87	100	N220	10%	020-109-9-008					10TCR-T10
C88	100	N220	10%	020-109-9-008					10TCR-T10
C89	600		10%	023-048-9-005					MS-36
C90	.02				CCD-203	CK-203	MGP02	TA120	TG-S20
C91	.02				CCD-203	CK-203	MGP02	TA120	TG-S20
C92	.04					DD-403		GP140	
C93	2	NPO				DTZ-2R2	NPO2P2	CN0522	10TCC-V22
C94	2	NPO				DTZ-2R2	NPO2P2	CN0522	10TCC-V22
C95	.04					DD-403		GP140	
C96	.04					DD-403		GP140	
C97	.04					DD-403		GP140	
C98	5	NPO					NPO5		10TCC-V50
C99	.01				CCD-103	CK-103	MGP01	TA110	TG-S10
C102	.01				CCD-103	CK-103	MGP01	TA110	TG-S10
C103	5	NPO					NPO5		10TCC-V50
C104	.04					DD-403		GP140	
C105	.01				CCD-103	CK-103	MGP01	TA110	TG-S10
C106	.04					DD-403		GP140	
C107	.04					DD-403		GP140	
C108	20	NPO	10%		CCTO-200	DTZ-20	NPO20	CN0420	10TCC-Q20
C109	15	NPO	10%		CCTO-150	DTZ-15	NPO15	CN0415	10TCC-Q15
C110	20	NPO	10%		CCTO-150	DTZ-20	NPO20	CN0420	10TCC-Q20
C111	.001		10%		6DP-1-102	CPR-1000J	DPMS6D1	EWF1A210	225P10291WD3
C112	150		10%		CCD-151	DD-151	GP150	GP315	10TS-T15
C113	.04					DD-403		GP140	
C114	.01				CCD-103	CK-103	MGP01	TA110	TG-S10
C115	25	NPO	10%			DTZ-25		CN0425	10TCC-Q25
C117	.04					DD-403		GP140	
C119	.02				CCD-203	CK-203	MGP02	TA120	TG-S20
C121	.01				CCD-103	CK-103	MGP01	TA110	TG-S10
C124	.04					DD-403		GP140	
C126	.01				CCD-103	CK-103	MGP01	TA110	TG-S10
C133	.04					DD-403		GP140	
C136	.04					DD-403		GP140	
C137	35	NPO	10%						
C138	250		10%	023-048-9-002	DM-19-251J				
C139	250		10%	023-048-9-002	DM-19-251J				
C140	400		10%	023-048-9-004					MS-34
C141	1	NPO						CN0510	10TCC-V10
C142	.04					DD-403		GP140	
C143	650		10%	023-048-9-006					
C144	.04					DD-403		GP140	
C145	.04					DD-403		GP140	
C146	200		10%		DM-19-201J	CPR-200J	CD15FD201J03	SX320	424ME2000J501
C147	50	NPO	10%		CCTO-510	DTZ-50	NPO50	CN0450	10TCC-Q50
C148	.04					DD-403		GP140	

PARTS LIST AND DESCRIPTION (CONTINUED)

(When ordering parts, state Model, Part Number, and Description.)

CAPACITORS (cont)

ITEM No.	RATING	MFGR. PART No.	REPLACEMENT DATA				
			ARCO/ELMENCO PART No.	CENTRALAB PART No.	CORNELL-DUBILIER PART No.	MALLORY PART No.	SPRAGUE PART No.
C149	.1			CK-104		TA010	TG-P10
C150	400 10%	023-048-9-004					MS-34
C151	1 NPO					CN0510	10TCC-V10
C152	.04			DD-403		GP140	
C153	.04			DD-403		GP140	
C155	.04			DD-403		GP140	
C156	.04			DD-403		GP140	
C157	.04			DD-403		GP140	
C158	25 NPO 10%			DTZ-25		CN0425	10TCC-Q25
C159	.04			DD-403		GP140	
C160	.02		CCD-203	CK-203	MGP02	TA120	TG-S20
C161	.02		CCD-203	CK-203	MGP02	TA120	TG-S20
C162	1 NPO					CN0510	10TCC-V10
C164	.04			DD-403		GP140	
C165	.04			DD-403		GP140	
C166	.02		CCD-203	CK-203	MGP02	TA120	TG-S20
C171	.04			DD-403		GP140	
C175	.04			DD-403		GP140	
C176	.1			CK-104		TA010	TG-P10
C177	.1			CK-104		TA010	TG-P10
C180	.04			DD-403		GP140	
C185	.01		CCD-103	CK-103	MGP01	TA110	TG-S10
C186	.04			DD-403		GP140	
C188	.04			DD-403		GP140	
C191	.04			DD-403		GP140	
C192	.001	025-089-9-001					
C195	.01		CCD-103	CK-103	MGP01	TA110	TG-S10
C196	.01		CCD-103	CK-103	MGP01	TA110	TG-S10
C197	.01		CCD-103	CK-103	MGP01	TA110	TG-S10
C198	.04			DD-403		GP140	
C199	.04			DD-403		GP140	
C200	.04			DD-403		GP140	
C300	.01		CCD-103	CK-103	MGP01	TA110	TG-S10
CT1	50 (Max)	020-030-9-002					
CT2	50 (Max)	020-030-9-002					
CT3	50 (Max)	020-030-9-002					
CT4	50 (Max)	020-030-9-002					
CT5	50 (Max)	020-030-9-002					
CT6	50 (Max)	020-030-9-002					
CT7	20 (Max)	028-030-9-002					

CONTROLS (All wattages 1/2 watt, or less, unless listed)

ITEM No.	FUNCTION	RESIST-ANCE	REPLACEMENT DATA				
			MFGR. PART No.	CENTRALAB PART No.	CLAROSTAT PART No.	CTS—IRC PART No.	MALLORY PART No.
VR1	RF Gain Range	100 K	008-209-9-001	TSV-100K (2) or T-100K (2)	C-104 (2)	X201R104B (2)	MTC15L1 (2)
VR2	RF Gain	100 K	008-210-9-002	F1-100K (1), SSK014		BU1 (1),CF12, SS1,DC1	RU15L,SL36,SL3250
VR3	"S"	20 K		TSV-50K (2) or T-50K (2)	C-503 (2)	X201R503B (2)	MTC54L1 (2)
	"S"	5000	008-209-9-003 (6)	TSV-5K (2) or T-5000 (2)	C-502 (2)	X201R502B (2)	MTC53L1 (2)
VR4	Voice Lock	20 K	008-210-9-004	F1-25K(1), SSK014		BU1(1),CF11,SS1, DC1	RU253L,SL36, SL3250
VR5	Voice Lock Range	100 K	008-209-9-001	TSV-100K (2) or T-100K (2)	C-104 (2)	X201R104B (2)	MTC15L1 (2)
VR6	Frequency	5000	008-209-9-003	TSV-5K (2) or T-5000 (2)	C-502 (2)	X201R502B (2)	MTC53L1 (2)
VR7	AGC	20 K	008-187-9-006	T-20K (2) or TSV-25K (2)	C-253 (2)	X201R253B (2)	MTC24L1 (2)
VR8	Squelch Range	100 K	008-209-9-001	TSV-100K (2) or T-100K (2)	C-104 (2)	X201R104B (2)	MTC15L1 (2)
VR9	Squelch	100 K	008-210-9-002	F1-100K(1), SSK014		BU1(1),CF13,SS1, DC1	RU15L,SL36,SL3250
VR10	Balance	50 K	008-209-9-004	TSV-50K (2) or T-50K (2)	C-503 (2)	X201R503B (2)	MTC54L1 (2)
VR11	Dyna Mike	10 K	008-210-9-003	F2-10K(1), SSK014		BU1(1),CF61,SS1, DC1	RU14A,SL36,SL3250
VR12	AMC	10 K	008-209-9-002	TSV-10K (2) or T-10K (2)	C-103 (2)	X201R103B (2)	MTC14L1 (2)
VR13	RF Power	100 K	008-209-9-001	TSV-100K (2) or T-100K (2)	C-104 (2)	X201R104B (2)	MTC15L1 (2)
VR14	Bias	300	008-209-9-006	T-300(2)		X201R351B(2)	MTC32L1(2)
VR15	ALC	50 K	008-209-9-004	TSV-50K (2) or T-50K (2)	C-503 (2)	X201R503B (2)	MTC54L1 (2)
VR16	Volume/Switch	10 K	008-210-9-005	F2-10K(1), SSK014,KR2		BU1(1),CF61,SS1, WF	RU14A,SL36,SL3250, US27
VR17	Volt	200	008-209-9-007	T-200(2) or TSV-250(2)		X201R251B(2)	MTC22L1(2)
VR18	Mod Meter	100 K	008-209-9-001	TSV-100K (2) or T-100K (2)	C-104 (2)	X201R104B (2)	MTC15L1 (2)

(1) Enlarge mounting hole.
(2) Cut off one of the end terminals and bend to fit PC board.
(6) Alternate part, may be used in some versions.

PARTS LIST AND DESCRIPTION (CONTINUED)

(When ordering parts, state Model, Part Number, and Description.)

RESISTORS (Power and Special)

ITEM No.	RATING	REPLACEMENT DATA	
		WORKMAN PART No.	MFGR. PART No.
R67	5.6 5% 1/4 W		
R131	.5 5% 1/4 W		

ITEM No.	RATING	REPLACEMENT DATA	
		WORKMAN PART No.	MFGR. PART No.
R148	4.5 5 W		
R149	1 1% 1 W		

COILS (RF-IF)

ITEM No.	FUNCTION	REPLACEMENT DATA			
		MFGR. PART No.	OTHER IDENTIFICATION	MEISSNER PART No.	MILLER PART No.
L1	RF Choke (10 uH)	041-062-9-001	100		
L2	RF Choke (8.2 uH)	041-062-9-003	8R2		
L3	RF Choke (100 uH)	041-062-9-002	101		
L4	RF Choke (6.8 uH)	041-061-9-002	6R8		
L5	Trap (54 MHz)	041-056-9-003	TC-71024		
L6	Xmit Ant (27 MHz)	044-032-9-001	NS-1367A		
L7	Pi Filter (27 MHz)	044-032-9-001	NS-1367A		
L8	Final Tank (27 MHz)	041-056-9-003	TC-71024		
L9	RF Choke	041-062-9-005	NS-1515B		
L10	Xmit Buffer (27 MHz)	041-056-9-003	TC-71024		
L11	RF Choke	041-062-9-005	NS-1515B		
L12	RF Choke	041-062-9-005	NS-1515B		
L13	Line Choke	041-062-9-004	NS-1516		
T1	Rec Ant (27 MHz)	066-019-9-001	TKXC-24112N(LA-0803N25)		
T2	Rec RF (27 MHz)	066-019-9-002	TKXC-24124N(LA-0883N25)		
T3	Rec Rf (27 MHz)	066-019-9-002	TKXC-24124N(LA-0883N25)		
T4	Rec IF (7.8 MHz)	060-018-9-001	TKAC-22526N(LA-0383N25)		
T5	Rec IF (7.8 MHz)	060-018-9-002	TKAC-24133N(LA-0943N35)		
T6	Rec IF (7.8 MHz)	060-018-9-003	TKAC-24137N(LA-0963N15)		
T7	26 MHz Mixer Input	060-018-9-004	TKXC-24136D(LA-0933N35)		
T8	26 MHz Mixer Output	060-018-9-005	TKXC-24126YDR (LA-0903D15)		
T9	34 MHz Mixer Input	060-018-9-006	TKXC-24118D(LA-0833N23)		
T10	34 MHz Mixer Output	060-018-9-007	TKXC-24125DR (LA-0893N25)		
T11	34 MHz Output	060-018-9-008	TKXC-24119Y(LA-0843D15)		
T12	34 MHz Output	046-013-9-001	TKXC-24102OZ (LA-0853N25)		
T13	34 MHz Output	046-013-9-002	TKXC-24113X(LA-0813N25)		
T14	Balance Mixer Input	060-018-9-009	TKAC-24135ZPH (LA-0953N25)		
T15	Balance Mixer Output	064-013-9-001	TKXN-6711BM		
T16	19 MHz Output	064-013-9-002	TKXC-24132N		
T17	19 MHz Output	060-018-9-010	TKXC-24121Z		
T18	19 MHz Output	060-018-9-011	TKXC-24134X		
T19	7.8 MHz Osc Output	060-018-9-012	113CC-2804AC		
T20	Xmit RF Amp (27 MHz)	060-018-9-014	TKXC-23444N(LA-0693N15)		
T21	Xmit Buffer Input (27 MHz)	046-013-9-004	TKXC-24122X(LA-0873N25)		
T22	Xmit Mixer Output (27 MHz)	046-013-9-003	TKXC-241178BH (LA-0823N25)		
T23	Xmit Mixer Input (7.8 MHz)	060-018-9-013	TKAC-23360ZVI (LA-0683N25)		

TRANSFORMER (Driver)

ITEM No.	TURNS RATIO			REPLACEMENT DATA				NOTES
	PRI.	SEC. 1	SEC. 2	MFGR. PART No.	STANCOR PART No.	THORDARSON PART No.	TRIAD Part No.	
IPT	1.25	1 CT		068-007-9-001				

TRANSFORMER (Audio Output)

ITEM No.	IMPEDANCE		REPLACEMENT DATA				NOTES
	PRI.	SEC.	MFGR. PART No.	STANCOR PART No.	THORDARSON PART No.	TRIAD PART No.	
OPT	32 CT	8	061-023-9-001				

TRANSFORMER (Power)

ITEM No.	RATING			REPLACEMENT DATA				NOTES
	PRI.	SEC. 1	SEC. 2	MFGR. PART No.	STANCOR PART No.	THORDARSON PART No.	TRIAD PART No.	
PT	120 VAC @ 460 mA	18.5 VAC @ 1.4 A		065-102-9-001 (TF-049)				

PARTS LIST AND DESCRIPTION (CONTINUED)

(When ordering parts, state Model, Part Number, and Description.)

SPEAKER

ITEM No.	TYPE	REPLACEMENT DATA		NOTES
		MFGR. PART No.	QUAM PART No.	
SP1	4" x 2 1/2" PM 8 ohms	580-015-9-001		

FUSE DEVICES

ITEM No.	DESCRIPTION	REPLACEMENT DATA						
		PART No.		BUSS PART No.		LITTELFUSE PART No.		WORKMAN PART No.
		DEVICE	HOLDER	DEVICE	HOLDER	DEVICE	HOLDER	DEVICE
F1	2A Fast Acting	191-251-3-002	742-018-9-001	AGC2	HDJ	312002	150145	FG2-2

MISCELLANEOUS

ITEM No.	PART NAME	PART No.	NOTES
CF	Crystal Filter	143-003-9-001	7.8 MHz
M	Meter	320-051-9-001	"S"/RF
M1	Meter	320-054-9-001	Modulation
RL	Relay	441-008-9-001	Xmit/Rec
S1	Switch	084-036-9-001	NB-Off
S2	Switch	084-036-9-001	Anl-Off
S3	Switch	084-036-9-001	CB-PA
S4	Switch	083-159-9-001	Channel Selector
S5	Switch		AM-USB-LSB
X1	Crystal	133-007-9-001	11.0035 MHz
X2	Crystal	133-007-9-002	11.0135 MHz
X3	Crystal	133-007-9-003	11.0235 MHz
X4	Crystal	133-007-9-004	11.0435 MHz
X5	Crystal	133-007-9-005	8.1590 MHz
X6	Crystal	133-007-9-006	8.2090 MHz
X7	Crystal	133-007-9-007	8.2590 MHz
X8	Crystal	133-007-9-008	8.3090 MHz
X9	Crystal	133-007-9-009	8.3590 MHz
X10	Crystal	133-007-9-010	8.4090 MHz
X11	Crystal	133-007-9-011	7.8025 MHz
	Printed Circuit Board	302-153-9-100	Main
	Printed Circuit Board	302-154-9-100	Power Supply

CABINETS & CABINET PARTS (When ordering specify model, chassis & color)

ITEM	PART No.
Cabinet, Bottom	252-015-9-001
Cabinet, Top	253-036-9-001
Chassis	257-059-9-001
Back Panel	262-012-9-001
Front Panel	380-213-9-001

ITEM	PART No.
Knob, Chanel Selector	751-095-9-001
Knob, Vol.,Dynamike,Squelch,RF Gain, Voice Lock, Mode	751-095-9-002
Channel Number Disc	380-176-9-002
Control Plate	260-048-9-001

ACCESSORIES

ITEM	MFGR. PART No.	REMARKS
Dynamic Microphone	562-006-9-001	Complete
DC Power Cord	523-082-9-001	

WIRING DATA

General-use Hook-up Wire ..... Use BELDEN No. 8530 (Solid) Available in 12 Colors
8524 (Stranded) Available in 12 Colors

Shielded Antenna Lead ..... Use BELDEN No. 8214 Lowest-loss (RG-8/U Type)
8237 Low-loss (RG-8/U)
8240 (Solid) Miniature (RG-58/U)
8259 (Stranded) Miniature (RG-58A/U)

Coiled Microphone Cable ..... Use BELDEN No. 8497 3-Conductor,1 Shielded,for Press-to-Talk (Neoprene)
8496 3-Conductor,1 Shielded,for Press-to-Talk (Vinyl)

Ignition Noise Suppression ..... Use BELDEN No. 7300-Series Spark-Plug Sets

Bonding Strap ..... Use BELDEN No. 8661 (3/8 In.)

For Supplier Address See PHOTOFACT Index

NOTE

ONLY THOSE PERSONS PROPERLY LICENSED ARE PERMITTED TO MAKE REPAIRS OR ADJUSTMENTS WHICH MAY RESULT IN ILLEGAL OPERATION. (REFER TO FCC RULES AND REGULATIONS PART 95, SUBPARTS C & D.)

The frequency of the transmitter should be checked periodically with a secondary frequency standard to insure proper and legal operation.

Best results will be obtained when adjusting the final RF output circuit if the antenna normally used is connected and the chassis is as nearly in the cabinet as possible.

Connect either 50-ohm dummy load or the normally used antenna system.

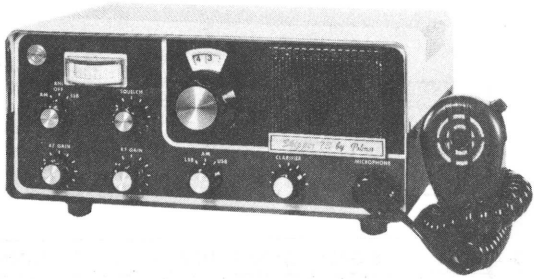

MODEL Skipper 73

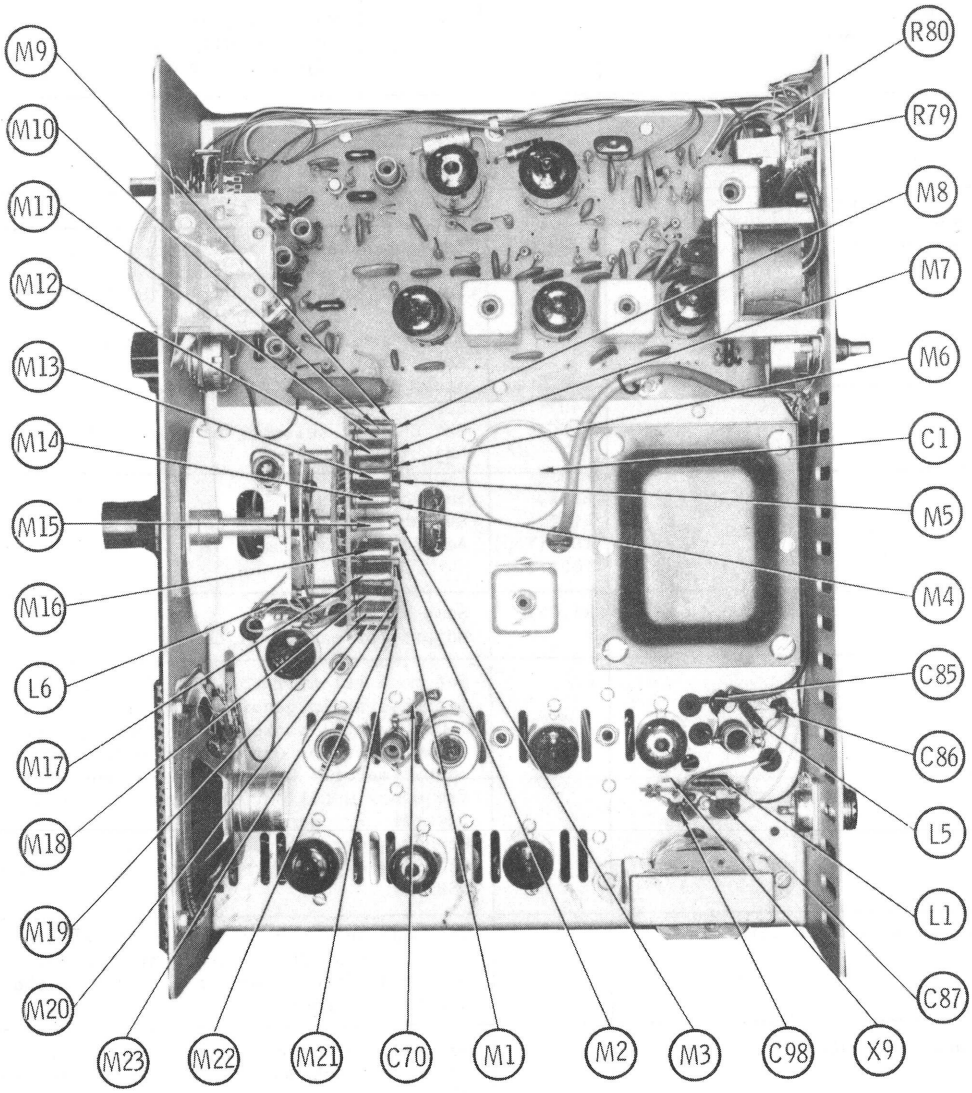

HOWARD W. SAMS & CO., INC. Indianapolis, Indiana 46206

 Printed in U. S. of America 4CY162

RECEIVER ALIGNMENT

Suggested Alignment Tools:	GC ELECTRONICS
L101, L201, L301, L401, T601, T1101, T1201, T1301	9302
C27, C31, C101.	5000, 8290

RECEIVER ALIGNMENT

Connect an AC-VTVM across speaker voice coil.
RF Gain-fully CW, Selector Switch-Ch. 11, ANL Switch-Off, Clarifer-Mid-Range.
Mode Selector-AM
Adjust Volume Control to obtain suitable reading.

SIGNAL GENERATOR	CHANNEL	ADJUST	REMARKS
Connect high side thru a .01 uF to antenna connector, low side to ground. Set to 27.085 MHz (1000 Hz @ 30% mod.)	11	L101, L202, L203, L302, L303, T1101, T1201, T1301	Adjust for maximum.
No signal Antenna disconnected		R5	Mode selector to AM. RF gain fully CW. Adjust for zero.

TRANSMITTER ALIGNMENT

INDICATOR	ADJUST	REMARKS
RF Wattmeter	L201, L301	Connect wattmeter to antenna connector. Set channel selector to channel 23 Set mode selector to LSB. Using audio generator insert 1500 Hz @ 10 uV into microphone jack. Key transmitter. Adjust for maximum.
	L401	Same as above. Set channel selector to channel 3 Adjust for maximum.
	L501, L101, T601(Top) T601(Bot)	Same as above. Set channel selector to channel 1 Adjust for maximum.
	R4,C31	Same as above. Adjust for carrier null.
	C27	Set mode selector to LSB. Key transmitter. Increase audio generator frequency toward 1500 Hz until peaked on wattmeter. Set audio generator ouput for 4 watts output on wattmeter. Decrease audio generator frequency until output wattmeter drops to 1 watt. Frequency should be around 300 Hz Repeat above procedure with mode selector on USB. Adjust for balance between USB and LSB.
0-25 mA DC Milliameter	L501	Set mode selector to AM. Break cathode connection at TP1. Insert milliameter. Key transmitter. Adjust for no more than 5 watts DC input.
Frequency Counter	C101	Set mode selector to AM. Set channel selector to channel 11. Set clarifier to MINIMUM capacitance. Connect wattmeter and counter to antenna connector. Key transmitter. Adjust for 27.086 MHz.
RF Panel meter	gimmick	Connect antenna. Adjust for suitable reading.

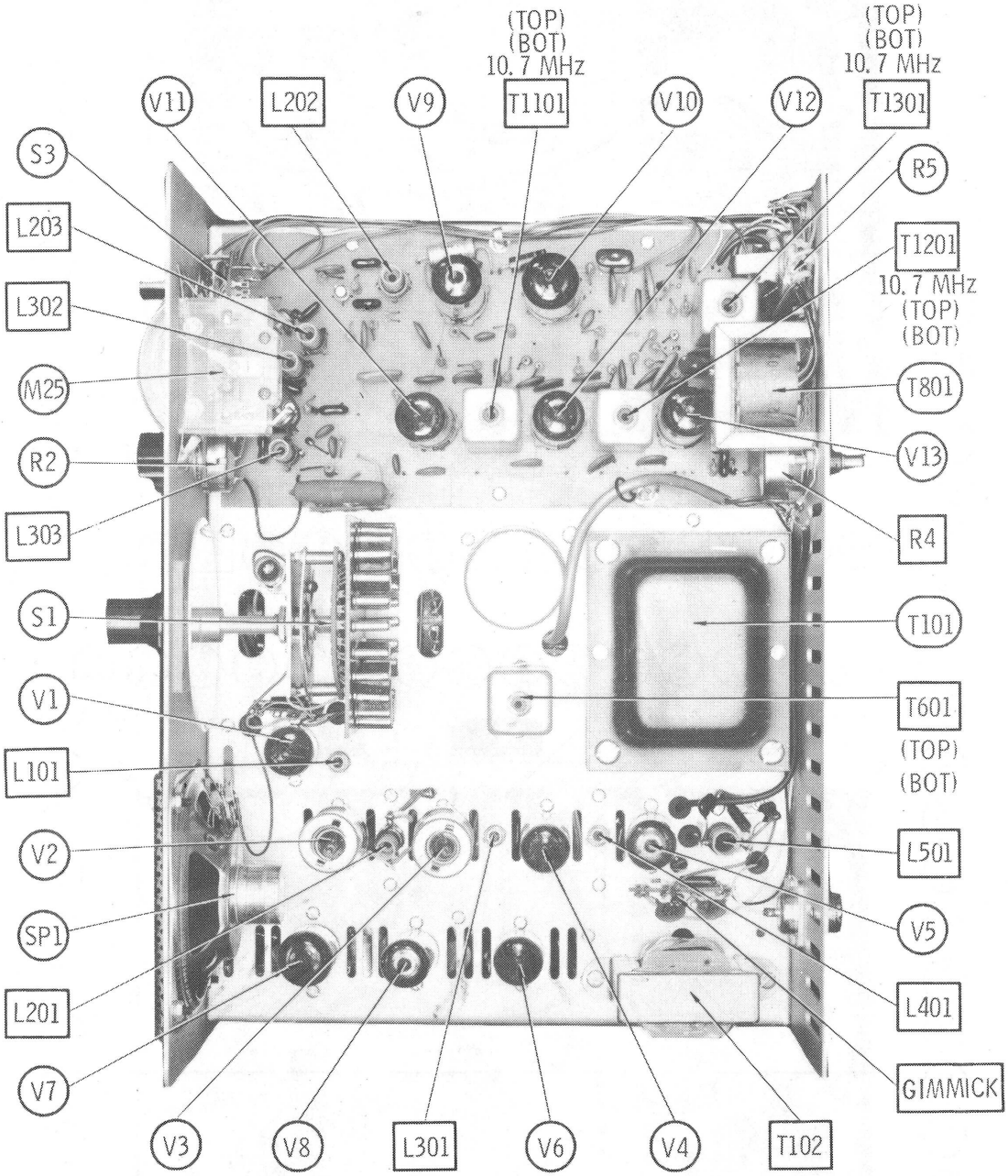
(TOP)
(BOT)
10.7 MHz
T1101
(TOP)
(BOT)
10.7 MHz
T1301
V11
L202
V9
V10
V12
S3
R5
L203
T1201
10.7 MHz
(TOP)
(BOT)
L302
M25
T801
R2
V13
L303
R4
S1
T101
V1
T601
(TOP)
(BOT)
L101
V2
L501
SP1
V5
L201
L401
V7
GIMMICK
V3
V8
L301
V6
V4
T102

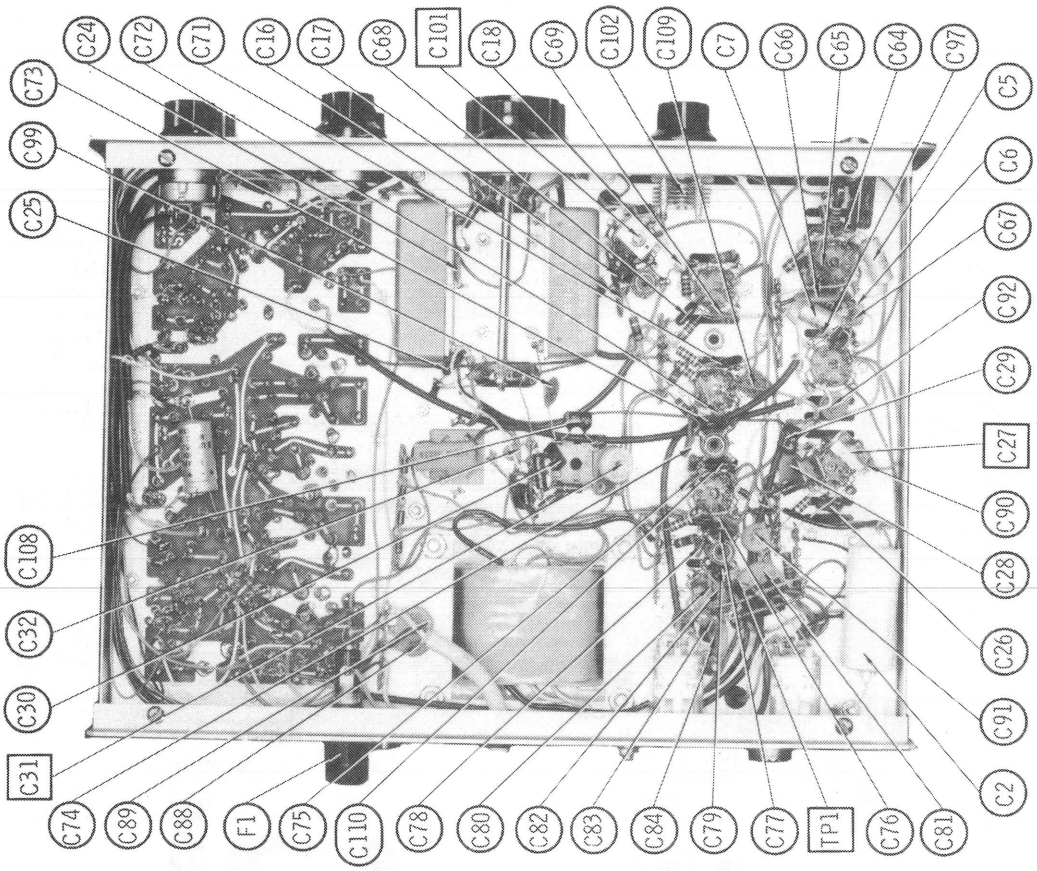
C24
C72
C71
C16
C17
C68
C101
C18
C69
C102
C109
C7
C66
C65
C64
C97
C5
C6
C67
C92
C29
C27
C90
C28
C26
C91
C2
C81
C76
TP1
C77
C79
C84
C83
C82
C80
C78
C110
C75
F1
C88
C89
C74
C31
C30
C32
C108
C25
C99
C73

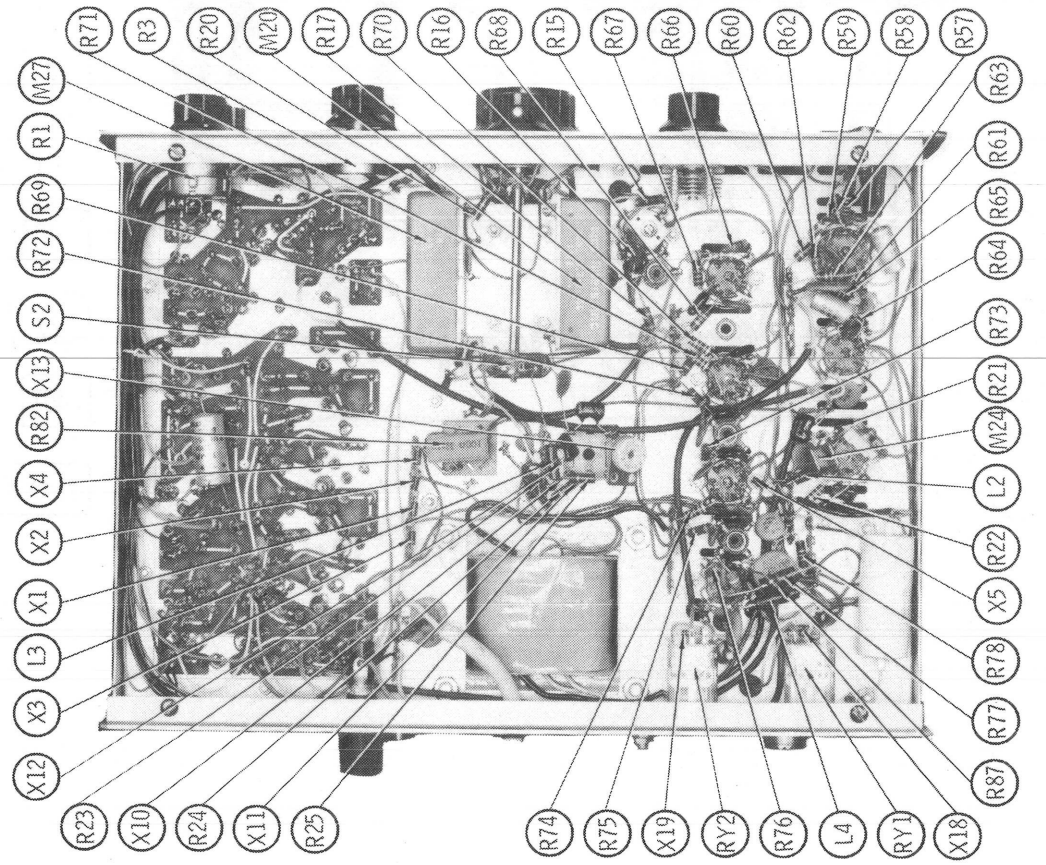
R71
R3
R20
M20
R17
R70
R16
R68
R15
R67
R66
R60
R62
R59
R58
R57
R63
R61
R65
R64
R73
R21
M24
L2
R22
X5
R78
R77
R87
X18
RY1
L4
R76
RY2
X19
R75
R74
R25
X11
R24
X10
R23
X12
X3
L3
X1
X2
X4
R82
X13
S2
R72
R69
R1
M27

A Howard W. Sams CIRCUITRACE® Photo

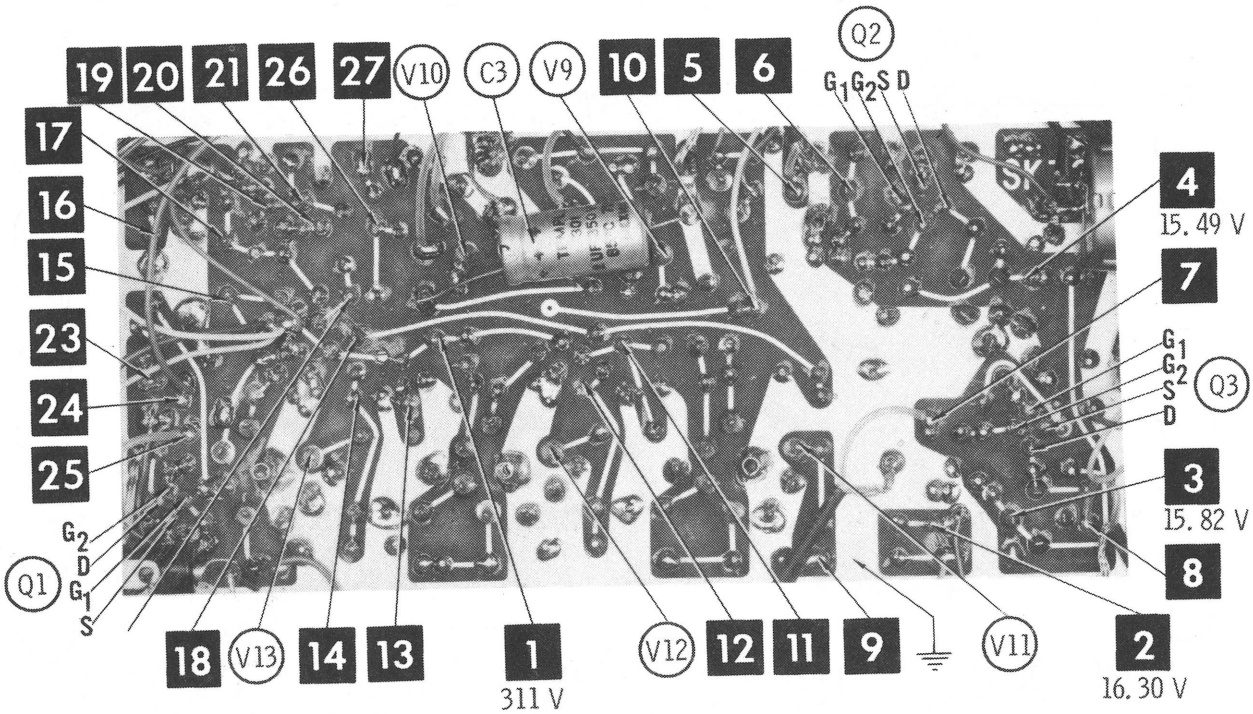

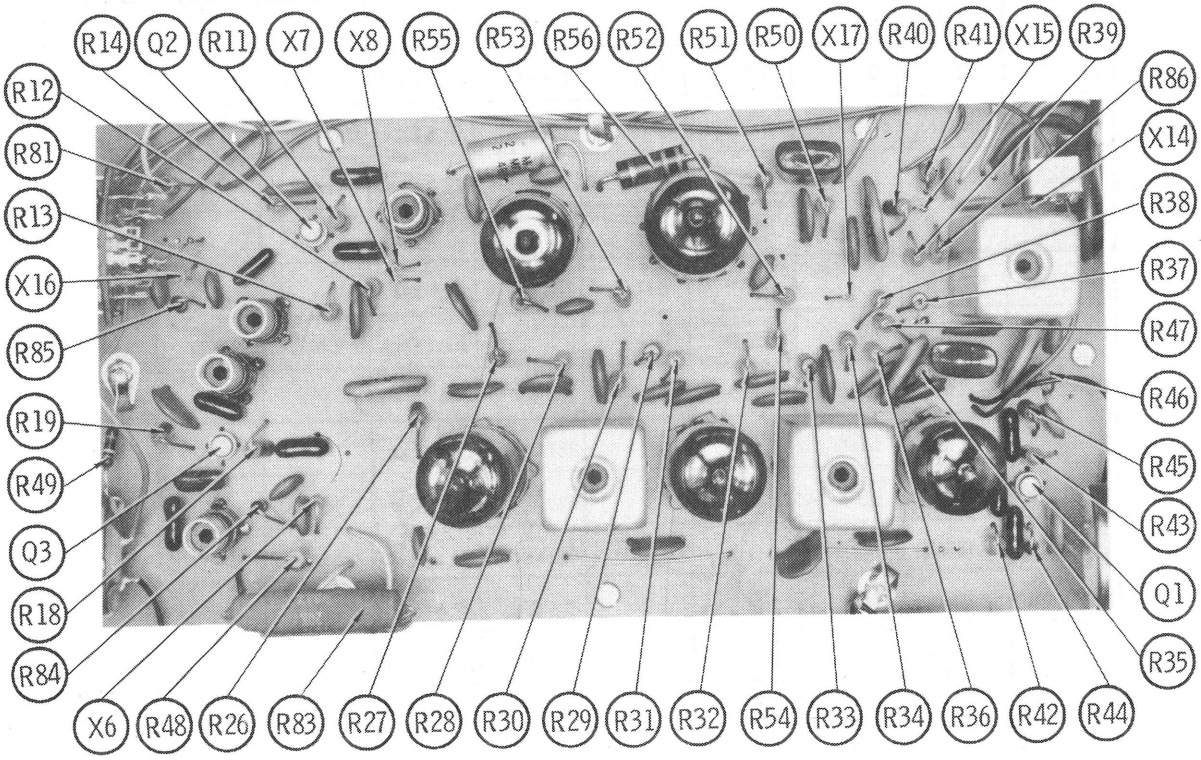

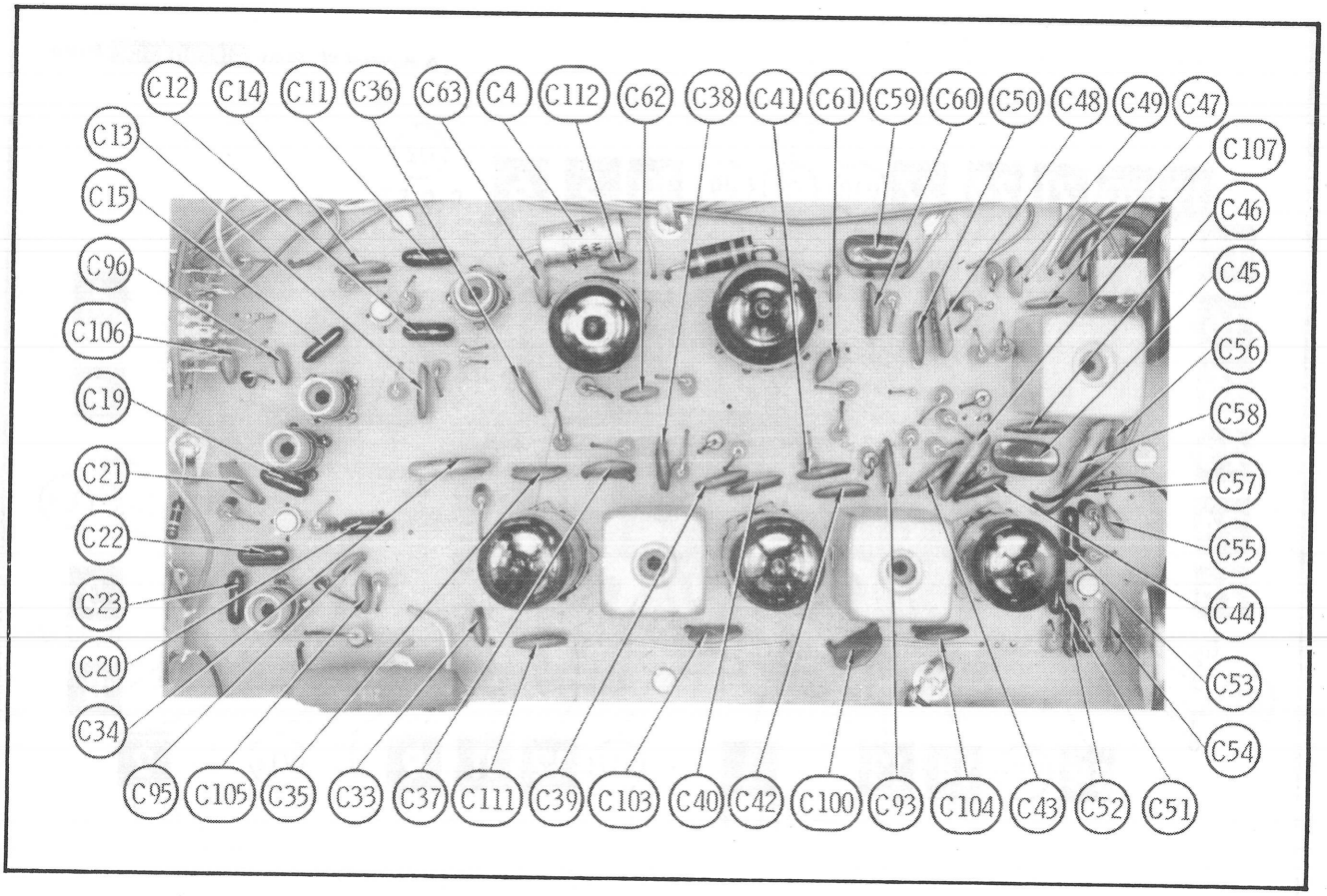

RESISTANCE MEASUREMENTS

ITEM	PIN 1	PIN 2	PIN 3	PIN 4	PIN 5	PIN 6	PIN 7	PIN 8	PIN 9
V1 12BA6	1.14 MΩ	0 Ω	0 Ω	0 Ω	1.4 KΩ†	34 KΩ†	0 Ω		
V2 12BE6	922 Ω	0 Ω	0 Ω	0 Ω	1.2 KΩ†	75.2 KΩ††	33.2 KΩ		
V3 12BA6	48 KΩ	0 Ω	0 Ω	0 Ω	1.1 KΩ†	49.1 KΩ††	0 Ω		
V4 12BA6	962 Ω	0 Ω	0 Ω	0 Ω	1.03 KΩ†	48.2 KΩ††	0 Ω		
V5 12AQ5	4200 Ω	940 Ω *	0 Ω	0 Ω	181 Ω†	10.7 KΩ†			
V6 12BA6	972 KΩ	0 Ω	0 Ω	0 Ω	100 Ω†	72.5 KΩ	0 Ω		
V7 12AX7	1.05 MΩ††	106 KΩ	932 Ω	0 Ω	0 Ω	106 KΩ††	1.1 MΩ	947 Ω	
V8 12AQ5	1.1 MΩ	332 Ω ■	0 Ω	0 Ω	180 Ω†	100 Ω†			
V9 12AQ5	539 KΩ	320 Ω	0 Ω	0 Ω	261 Ω ●	0 Ω ●			
V10 12AX7	130 KΩ●	103 KΩ▲	0 Ω	0 Ω	0 Ω	130 KΩ●	1.34 KΩ	1.34 MΩ	0 Ω
V11 12BA6	2.07 MΩ	0 Ω	0 Ω	0 Ω	484 Ω ●	98.6 KΩ●	229 Ω		
V12 12BA6	1.97 MΩ	0 Ω	0 Ω	0 Ω	493 Ω ●	97.5 KΩ●	359 Ω		
V13 12BA6	2.08 MΩ	0 Ω	0 Ω	0 Ω	504 Ω ●	20.3 KΩ●	228 Ω		

† Measured from cath of X3 and X4.
†† Measured from pin 13 of relay (RY1)
* Measured from pin 16 of relay (RY1)
■ Measured from pin 7 of relay I with mode switch in AM position.
● Measured from pin 11 of relay (RY1)
▲ Measured with mode switch in AM position.

PARTS LIST AND DESCRIPTION

(When ordering parts, state Model, Part Number, and Description.)

TUBES

AMPEREX		GENERAL ELECTRIC	RCA		SYLVANIA
ITEM No.	USE	TYPE	ITEM No.	USE	TYPE
V1	OSC	12BA6	V8	Modulator	12AQ5
V2	Xmit Mixer	12BE6	V9	Audio Output	12AQ5
V3	Xmit Buffer	12BA6	V10	Audio Amp	12AX7
V4	Xmit Driver	12BA6	V11	1st IF Amp	12BA6
V5	Final	12AQ5	V12	2nd IF Amp	12BA6
V6	Rec OSC	12BA6	V13	3rd IF Amp	12BA6
V7	Mic Amp	12AX7			

SEMICONDUCTORS

ITEM No.	TYPE / MFGR. No./PART No.	REPLACEMENT DATA						
		GENERAL ELECTRIC PART No.	INTERNATIONAL RECTIFIER PART No.	MALLORY PART No.	MOTOROLA PART No.	RCA PART No.	SPRAGUE PART No.	SYLVANIA PART No.
Q1	40673				HEPF2004	SK3050	RT180	ECG 222
Q2	40673				HEPF2004	SK3050	RT180	ECG 222
Q3	40673				HEPF2004	SK3050	RT180	ECG 222
X1	1N4005	GE-504A	8D6 or 5A6D	PTC202	HEPR0054	SK3017A or SK3032	RT210 or RT214	ECG 116 or ECG 117
X2	1N4005	GE-504A	8D6 or 5A6D	PTC202	HEPR0054	SK3017A or SK3032	RT210 or RT214	ECG 116 or ECG 117
X3	1N4005	GE-504A	8D6 or 5A6D	PTC202	HEPR0054	SK3017A or SK3032	RT210 or RT214	ECG 116 or ECG 117
X4	1N4005	GE-504A	8D6 or 5A6D	PTC202	HEPR0054	SK3017A or SK3032	RT210 or RT214	ECG 116 or ECG 117
X5	1N4005	GE-504A	8D6 or 5A6D	PTC202	HEPR0054	SK3017A or SK3032	RT210 or RT214	ECG 116 or ECG 117
X6	16 V Zener	GEZD-15	Z-1214	ZB-16	HEPZ0419	SK3063	RT246	ECG 5075
X7	1N914	GE-300	D200	PTC214	HEPR0602	SK3100	RT218	ECG 177
X8	1N914	GE-300	D200	PTC214	HEPR0602	SK3100	RT218	ECG 177
X9	1N914	GE-300	D200	PTC214	HEPR0602	SK3100	RT218	ECG 177
X10	1N914	GE-300	D200	PTC214	HEPR0602	SK3100	RT218	ECG 177
X11	1N914	GE-300	D200	PTC214	HEPR0602	SK3100	RT218	ECG 177
X12	1N914	GE-300	D200	PTC214	HEPR0602	SK3100	RT218	ECG 177
X13	1N914	GE-300	D200	PTC214	HEPR0602	SK3100	RT218	ECG 177
X14	1N34A	1N34AS	1N34A	PTC207	HEP134	SK3087		ECG 109
X15	1N914	GE-300	D200	PTC214	HEPR0602	SK3100	RT218	ECG 177
X16	1N914	GE-300	D200	PTC214	HEPR0602	SK3100	RT218	ECG 177
X17	1N914	GE-300	D200	PTC214	HEPR0602	SK3100	RT218	ECG 177
X18	1N4005	GE-504A	8D6 or 5A6D	PTC202	HEPR0054	SK3017A or SK3032	RT210 or RT214	ECG 116 or ECG 117
X19	1N4005	GE-504A	8D6 or 5A6D	PTC202	HEPR0054	SK3017A or	RT210 or	ECG 116 or

ELECTROLYTIC CAPACITORS

ITEM No.	RATING	REPLACEMENT DATA					
		MFGR. PART No.	ARCO PART No.	CENTRALAB PART No.	CORNELL-DUBILIER PART No.	MALLORY PART No.	SPRAGUE PART No.
C1a	100 300 V		CTM-2438		BB-0275A	FP227.7A	TVL-2641
b	100 300 V						
C2	1000 25 V		ME-G1000	EA30-1000	WBR1000-25	MTA1000G25	TVA-1211
C3	2 350 V		CTA-1405		WBR2-450	TC595	TVA-1600
C4	25 25 V		ME-3-G-025	EA30-25	WBR25-25	MTA25D35	TVA-1205
C5	10 25 V		ME-2-G-010	EA30-10	WBR10-25	MTA10D35	TVA-1204
C6	10 25 V		ME-2-G-010	EA30-10	WBR10-25	MTA10D35	TVA-1204
C7	10 25 V		ME-2-G-010	EA30-10	WBR10-25	MTA10D35	TVA-1204

CAPACITORS

ITEM No.	RATING		MFGR. PART No.	REPLACEMENT DATA				
				ARCO/ELMENCO PART No.	CENTRALAB PART No.	CORNELL-DUBILIER PART No.	MALLORY PART No.	SPRAGUE PART No.
C11	24	10%		DM-15-240J	CPR-24J		SX424	MS-424
C12	100	5%		DM-15-101J	CPR-100J	CD15FD101J03	SX310	424MC1000J501
C13	.01			CCD-103	CK-103	MGP01	TA110	TG-S10
C14	.01			CCD-103	CK-103	MGP01	TA110	TG-S10
C15	33	5%		DM-15-330J	CPR-33J	CD15ED330J03	SX433	
C16	.01			CCD-103	CK-103	MGP01	TA110	TG-S10
C17	50	10%		DM-15-500J	CPJ-510			
C18	2	10%			DTZ-2R2	NP02P2	CN0522	10TCC-V22
C19	33	5%		DM-15-330J	CPR-33J	CD15ED330J03	SX433	
C20	24	10%		DM-15-240J	CPR-24J		SX424	MS-424
C21	.01			CCD-103	CK-103	MGP01	TA110	TG-S10
C22	33	10%		DM-15-330J	CPR-33J	CD15ED330J03	SX433	
C23	10	10%		DM-15-100J		CD15CD100J03	SX410	
C24	.01			CCD-103	CK-103	MGP01	TA110	TG-S10
C25	24	10%		DM-15-240J	CPR-24J		SX424	MS-424

(CONTINUED ON PAGE 104)

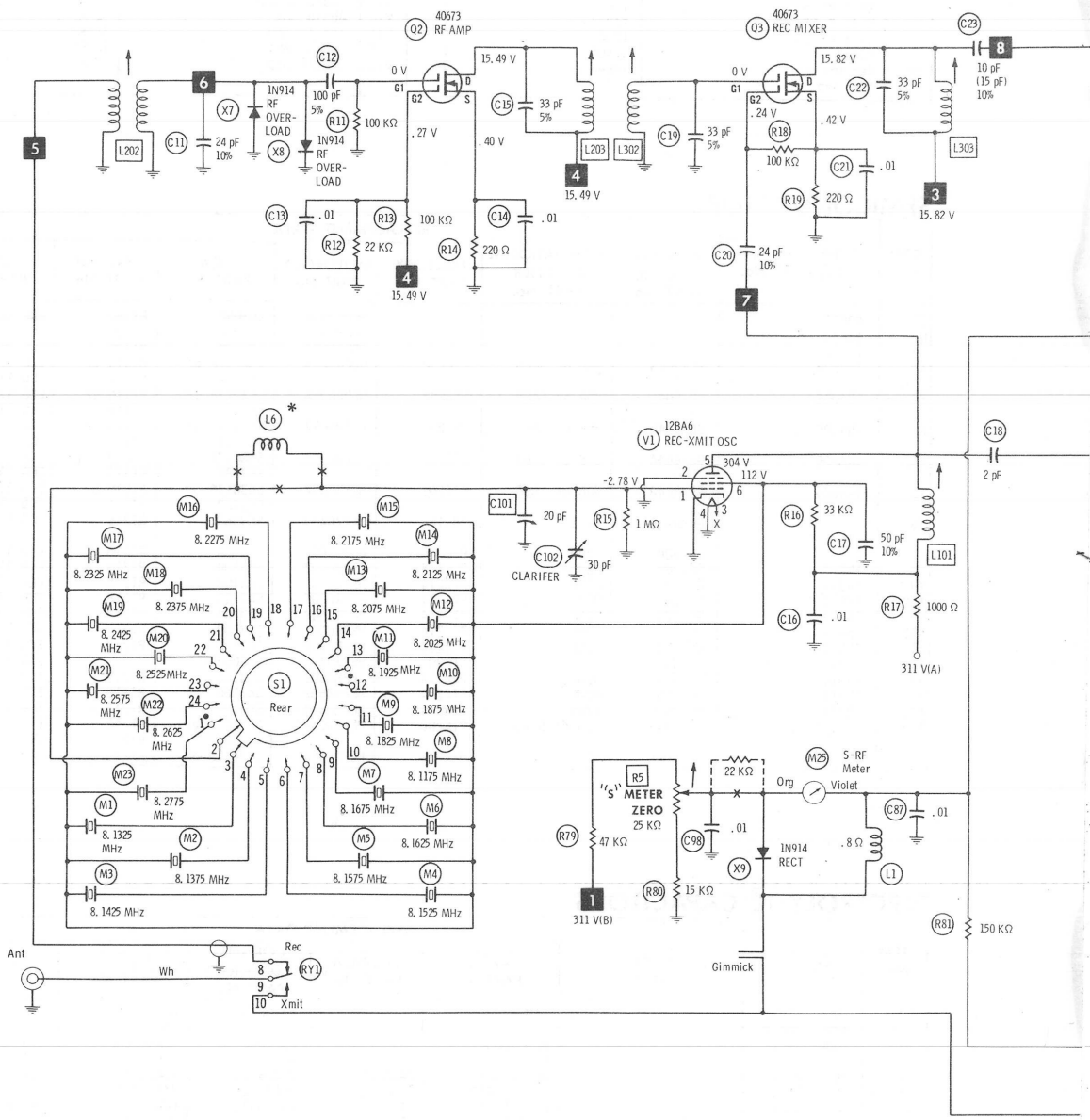

Denotes chassis.
Denotes ground. (Voltage reference unless otherwise indicated)
Indicates connection used in some versions.
Indicates connection not used in some versions.
* Omitted in some versions.
⊖ See parts list.
※ Value varies; replace with original value.
▲ Measured in transmit position.
● Measured with unit squelched.
NC No Connection.
Measurements taken with switching in position shown unless otherwise indicated.
Values shown in ( ) are used in some applications.
Resistors are 1/2W or less, 10% or 20%, unless otherwise indicated.
Supply voltage maintained at rated value for measurements.
Voltage and resistance measured with VTVM or equivalent meter, no signal applied and controls adjusted for normal operation.
Arrow on control indicates direction of advance.
Numbers assigned to terminals may not be found on the unit.
Transistor resistances vary widely; no resistance measurements taken.

A PHOTOFACT STANDARD NOTATION SCHEMATIC
with CIRCUITRACE®

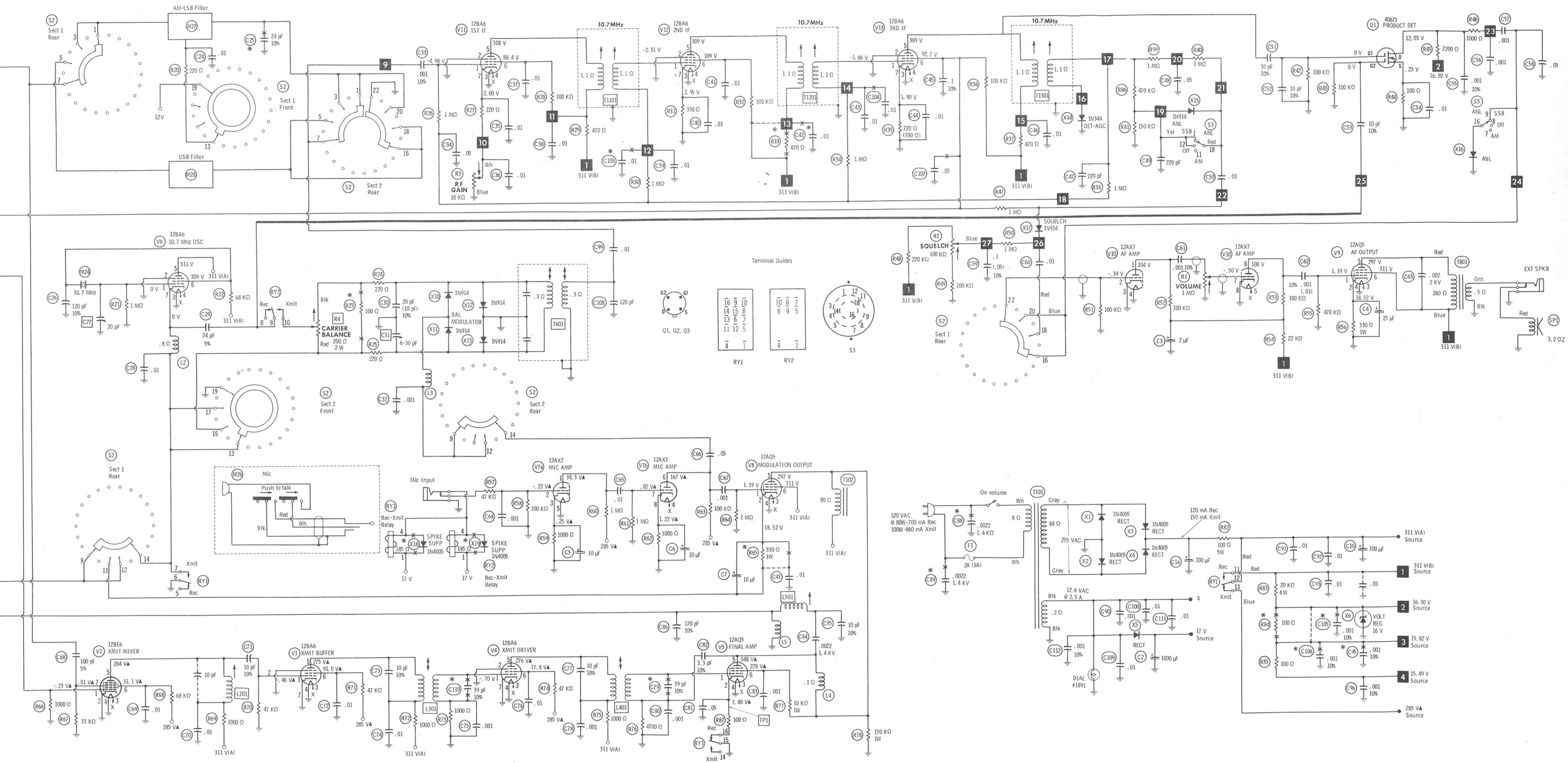
AM-LSB Filter
USB Filter
12BA6 1ST IF
12BA6 2ND IF
12BA6 3RD IF
10.7MHz
40673 PRODUCT DET
12BA6 10.7 MHz OSC
12BE6 XMIT MIXER
12BA6 XMIT BUFFER
12BA6 XMIT DRIVER
12AX7 MIC AMP
12AQ5 MODULATION OUTPUT
12AQ5 FINAL AMP
12AX7 AF AMP
12AQ5 AF OUTPUT
RF GAIN 10 KΩ
CARRIER BALANCE 200 Ω 2 W
SQUELCH 100 KΩ
VOLUME 1 MΩ
BAL MODULATOR
SPIKE SUPP 1N4005
Rec-Xmit Relay
Mic Input
Mic
Push to talk
Terminal Guides
Q1, Q2, Q3
RY1
RY2
S3
EXT SPKR
3.2 ΩZ
120 VAC @ 80W-700 mA Rec 100W-860 mA Xmit
On volume
255 VAC
84 Ω
8 Ω
1N4005 RECT
120 mA Rec 150 mA Xmit
12.6 VAC @ 2.5 A
17 V Source
DIAL #1891
VOLT REG 16 V
311 V(A) Source
311 V(B) Source
16.30 V Source
15.82 V Source
15.49 V Source
285 V Source

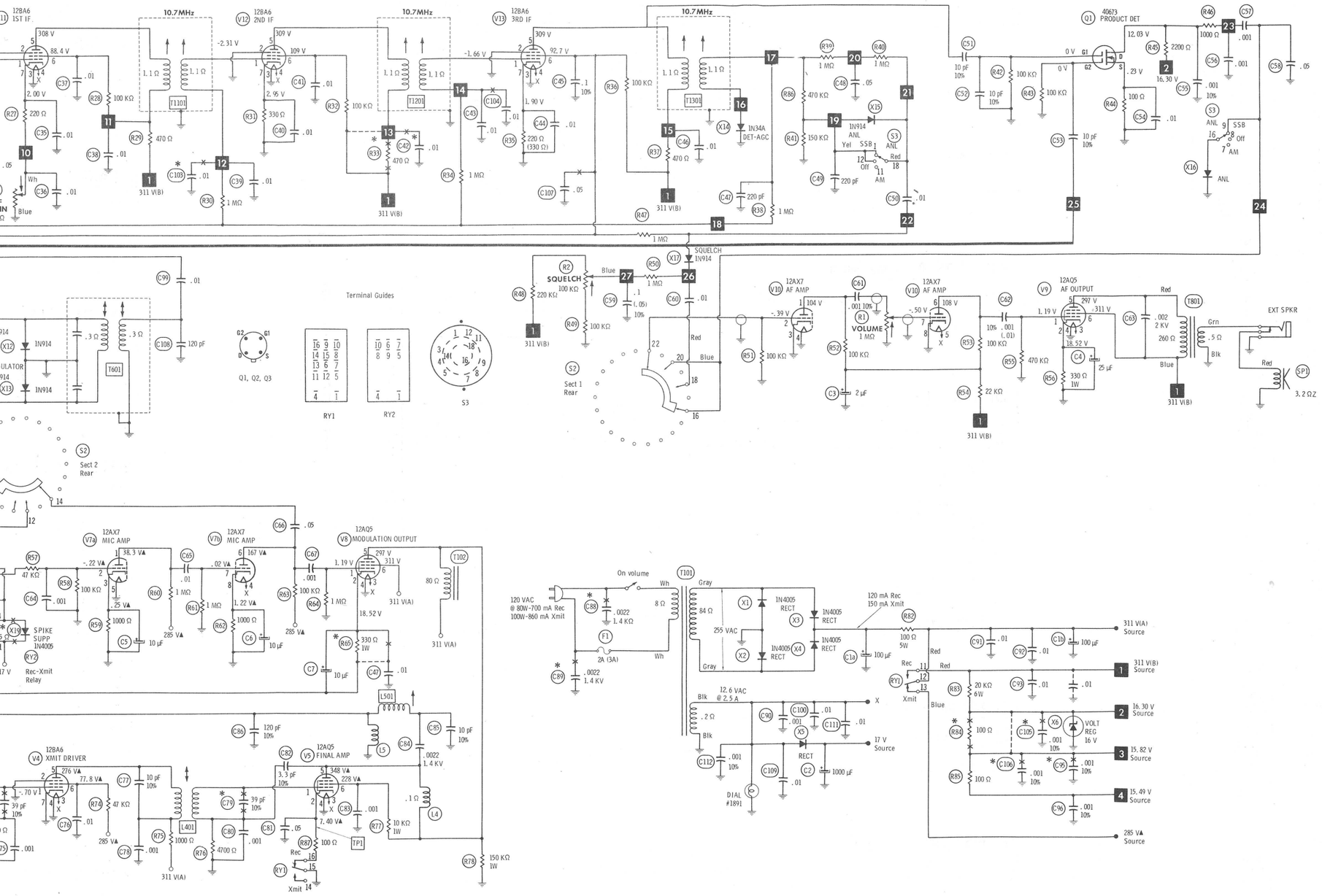
12BA6 1ST IF
10.7MHz
T1101
12BA6 2ND IF
T1201
12BA6 3RD IF
T1301
1N34A DET-AGC
40673 PRODUCT DET
SQUELCH 100 KΩ
SQUELCH 1N914
12AX7 AF AMP
VOLUME 1 MΩ
12AX7 AF AMP
12AQ5 AF OUTPUT
EXT SPKR
Terminal Guides
Q1, Q2, Q3
RY1
RY2
S3
S2 Sect 1 Rear
S2 Sect 2 Rear
T601
12AX7 MIC AMP
12AX7 MIC AMP
12AQ5 MODULATION OUTPUT
T102
SPIKE SUPP 1N4005
Rec-Xmit Relay
L501
12BA6 XMIT DRIVER
12AQ5 FINAL AMP
L401
TP1
L4
L5
On volume
120 VAC @ 80W-700 mA Rec 100W-860 mA Xmit
T101
1N4005 RECT
120 mA Rec 150 mA Xmit
12.6 VAC @ 2.5 A
DIAL #1891
VOLT REG 16 V
311 V(A) Source
311 V(B) Source
16.30 V Source
15.82 V Source
15.49 V Source
285 V Source
17 V Source

CAPACITORS (cont)

ITEM No.	RATING	MFGR. PART No.	REPLACEMENT DATA				
			ARCO/ELMENCO PART No.	CENTRALAB PART No.	CORNELL-DUBILIER PART No.	MALLORY PART No.	SPRAGUE PART No.
C47	220		CCD-221	DD-221	GP220	GP322	10TS-T22
C48	.05		CCD-503	CK-503	MGP05	TA150	TG-S50
C49	220		CCD-221	DD-221	GP220	GP322	10TS-T22
C50	.01		CCD-103	CK-103	MGP01	TA110	TG-S10
C51	10 10%		DM-15-100J		CD15CD100J03	SX410	
C52	10 10%		DM-15-100J		CD15CD100J03	SX410	
C53	10 10%		DM-15-100J		CD15CD100J03	SX410	
C54	.01		CCD-103	CK-103	MGP01	TA110	TG-S10
C55	.001 10%		CCD-102	DD-102	GP1000	SM210	2SS-D10
C56	.001		CCD-102	DD-102	GP1000	SM210	2SS-D10
C57	.001		CCD-102	DD-102	GP1000	SM210	2SS-D10
C58	.05		CCD-503	CK-503	MGP05	TA150	TG-S50
C59	.1 10%		1DP-2-104		DPMS2P1	EWF1A010	225P10491WD3
C26	120 10%		DM-15-121J	CPR-120J	CD15FD121J03	SX312	424MC1200J501
C27	20 (Max)						
C28	.01		CCD-103	CK-103	MGP01	TA110	TG-S10
C29	24 5%		DM-15-240J	CPR-24J		SX424	MS-424
C30	20 10%		DM-15-200J	CPR-20J		SX420	
C31	6-30						
C32	.001		CCD-102	DD-102	GP1000	SM210	2SS-D10
C33	.001 10%		CCD-102	DD-102	GP1000	SM210	2SS-D10
C34	.05		CCD-503	CK-503	MGP05	TA150	TG-S50
C35	.01		CCD-103	CK-103	MGP01	TA110	TG-S10
C36	.01		CCD-103	CK-103	MGP01	TA110	TG-S10
C37	.01		CCD-103	CK-103	MGP01	TA110	TG-S10
C38	.01		CCD-103	CK-103	MGP01	TA110	TG-S10
C39	.01		CCD-103	CK-103	MGP01	TA110	TG-S10
C40	.01		CCD-103	CK-103	MGP01	TA110	TG-S10
C41	.01		CCD-103	CK-103	MGP01	TA110	TG-S10
C42	.01		CCD-103	CK-103	MGP01	TA110	TG-S10
C43	.01		CCD-103	CK-103	MGP01	TA110	TG-S10
C44	.01		CCD-103	CK-103	MGP01	TA110	TG-S10
C45	.1 10%		1DP-2-104		DPMS2P1	EWF1A010	225P10491WD3
C46	.01		CCD-103	CK-103	MGP01	TA110	TG-S10
C60	.01		CCD-103	CK-103	MGP01	TA110	TG-S10
C61	.001 10%		CCD-102	DD-102	GP1000	SM210	2SS-D10
C62	.001 10%		CCD-102	DD-102	GP1000	SM210	2SS-D10
C63	.002 2 KV			D30-222			30GA-D22
C64	.001		CCD-102	DD-102	GP1000	SM210	2SS-D10
C65	.01		CCD-103	CK-103	MGP01	TA110	TG-S10
C66	.05		CCD-503	CK-503	MGP05	TA150	TG-S50
C67	.001		CCD-102	DD-102	GP1000	SM210	2SS-D10
C68	100 5%		DM-15-101J	CPR-100J	CD15FD101J03	SX310	424MC1000J501
C69	.01		CCD-103	CK-103	MGP01	TA110	TG-S10
C70	.01		CCD-103	CK-103	MGP01	TA110	TG-S10
C71	10 10%		DM-15-100J		CD15CD100J03	SX410	
C72	.01		CCD-103	CK-103	MGP01	TA110	TG-S10
C73	10 10%		DM-15-100J		CD15CD100J03	SX410	
C74	.01		CCD-103	CK-103	MGP01	TA110	TG-S10
C75	.001		CCD-102	DD-102	GP1000	SM210	2SS-D10
C76	.01		CCD-103	CK-103	MGP01	TA110	TG-S10
C77	10 10%		DM-15-100J		CD15CD100J03	SX410	
C78	.001		CCD-102	DD-102	GP1000	SM210	2SS-D10
C79	39 10%		DM-15-390J	CPR-39J	CD15ED390J03	SX439	
C80	.001		CCD-102	DD-102	GP1000	SM210	2SS-D10
C81	.05		CCD-503	CK-503	MGP05	TA150	TG-S50
C82	3.3 10%			DTZ-3R3	NPO3P3	CN0533	10TCC-V33
C83	.001		CCD-102	DD-102	GP1000	SM210	2SS-D10
C84	.0022 1.4 KV			D30-222			30GA-D22
C85	10 10%		DM-15-100J		CD15CD100J03	SX410	
C86	120 10%		DM-15-121J	CPR-120J	CD15FD121J03	SX312	424MC1200J501
C87	.01		CCD-103	CK-103	MGP01	TA110	TG-S10
C88	.0022 1.4 KV			D30-222			30GA-D22
C89	.0022 1.4 KV			D30-222			30GA-D22
C90	.001		CCD-102	DD-102	GP1000	SM210	2SS-D10
C91	.01		CCD-103	CK-103	MGP01	TA110	TG-S10
C92	.01		CCD-103	CK-103	MGP01	TA110	TG-S10
C93	.01		CCD-103	CK-103	MGP01	TA110	TG-S10
C95	.001 10%		CCD-102	DD-102	GP1000	SM210	2SS-D10
C96	.001 10%		CCD-102	DD-102	GP1000	SM210	2SS-D10
C97	.01		CCD-103	CK-103	MGP01	TA110	TG-S10
C98	.01		CCD-103	CK-103	MGP01	TA110	TG-S10
C99	.01		CCD-103	CK-103	MGP01	TA110	TG-S10
C100	.01		CCD-103	CK-103	MGP01	TA110	TG-S10
C101	20 (Max)						
C102	30 (Max)						
C103	.01		CCD-103	CK-103	MGP01	TA110	TG-S10
C104	.01		CCD-103	CK-103	MGP01	TA110	TG-S10
C105	.001 10%		CCD-102	DD-102	GP1000	SM210	2SS-D10
C106	.001 10%		CCD-102	DD-102	GP1000	SM210	2SS-D10
C107	.05		CCD-503	CK-503	MGP05	TA150	TG-S50
C108	120		DM-15-121J	CPR-120J	CD15FD121J03	SX312	424MC1200J501
C109	.01		CCD-103	CK-103	MGP01	TA110	TG-S10
C110	39 10%		DM-15-390J	CPR-39J	CD15ED390J03	SX439	
C111	.01		CCD-103	CK-103	MGP01	TA110	TG-S10
C112	.001 10%		CCD-102	DD-102	GP1000	SM210	2SS-D10

CONTROLS (All wattages 1/2 watt, or less, unless listed)

ITEM No.	FUNCTION	RESIST-ANCE	REPLACEMENT DATA				
			MFGR. PART No.	CENTRALAB PART No.	CLAROSTAT PART No.	CTS—IRC PART No.	MALLORY PART No.
R1	Volume/Switch (AF Gain)	1 M	052-010 (1)	F2-1meg, SRS012,KR1	A47-1meg-Z,RS-2, SW6-12 or [NP-1meg-Z, UP-A-400,NWE-12]	BU1,CF26,SS3,GC	UA16A,SLa500 or US41 or [RU16A, SL38,SL2500,US41] or [U53,US26]
R2	Squelch	100 K		F1-100K, SRS012	A47-100K-S,RS-2 or [NP-100K-S, UP-A-400]	BU2,CF13,SS3,DC1	UA15L,SL2500 or [RU15L,SL39,SL2500] or U41
R3	RF Gain	10 K		F1-10K,SRS012	A47-10K-SRS-2 or [UP-10K-S, UP-A-400]	BU2,CF9,SS3,DC1	UA14L,SL2500 or [RU14L,SL39, SL2500] or U20
R4	Carrier Balance	200 2 W	5905-295 (1)	MR250B or WW-201	A43-200,RS-3 or [NPW-200, UP-A-400]	BU2,WF1,SS3,DC1	VW200 or C200P
R5	"S" Meter Zero	25 K	025-038 (1)	F1-25K (18), SRS004 or TT-26 (18)	B47-25K-S (18), or [NP-25K-S (18), UP-S-010]	BU11 (18),CF11, SS6A	RU253L (18),SN750 or [UA253L (18), SN750] or TA253L (18)

(1) Number on unit.
(18) Use original mounting bracket.

RESISTORS (Power and Special)

ITEM No.	RATING	REPLACEMENT DATA	
		WORKMAN PART No.	MFGR. PART No.
R82	100 (5 W)	5W-SQ-100	

ITEM No.	RATING	REPLACEMENT DATA	
		WORKMAN PART No.	MFGR. PART No.
R83	20 K (6 W)	10W-SQ-20K	

COILS (RF-IF)

ITEM No.	FUNCTION	REPLACEMENT DATA			
		MFGR. PART No.	OTHER IDENTIFICATION	MEISSNER PART No.	MILLER PART No.
L1	RF Choke				
L2	RF Choke				
L3	RF Choke				
L4	RF Choke				
L5	RF Choke				
L6	RF Choke				
L101	Rec Xmit Osc (8 MHz)				
L201	Xmit Mixer (27 MHz)				
L202	Rec Antenna (27 MHz)				
L203	Rec RF (27 MHz)				
L301	Xmit Buffer (27 MHz)				
L302	Rec RF (27 MHz)				
L303	Rec Mixer (10.7 MHz)				
L401	Xmit Driver (27 MHz)				
L501	Final Tank (27 MHz)				
T601	Balance Modulation (10.7 MHz)		100-1451		
T1101	Input IF (10.7 MHz)		100-1445		
T1201	Interstage IF (10.7 MHz)		100-1445		
T1301	Output IF (10.7 MHz).		100-1445		

CHOKE (Audio Output)

ITEM No.	INDUCTANCE	REPLACEMENT DATA				NOTES
		MFGR. PART No.	STANCOR PART No.	THORDARSON PART No.	TRIAD PART No.	
T102	6.2 Hy	272-001 (1)				(1) Number on unit.

TRANSFORMER (Power)

ITEM No.	RATING		REPLACEMENT DATA				NOTES
	PRI.	SEC. 1	MFGR. PART No.	STANCOR PART No.	THORDARSON PART No.	TRIAD PART No.	
T101	120 VAC @ 860 mA 100 W	225 VAC @ 150 mA					
	SEC. 2	SEC. 3					
	12.6 VAC @ 2.5 A						

TRANSFORMER (A

ITEM No.	IMPEDANCE	
	PRI.	SEC.
T801	3920	3.2

SPEAKER

ITEM No.	TYPE
SP1	3 1/2 PM 3.2 ohm

FUSE DEVICES

ITEM No.	DESCRIPTION
F1	2 A Fast Actin

MISCELLANEOUS

ITEM No.	PART NAME
M1	Crystal
M2	Crystal
M3	Crystal
M4	Crystal
M5	Crystal
M6	Crystal
M7	Crystal
M8	Crystal
M9	Crystal
M10	Crystal
M11	Crystal
M12	Crystal
M13	Crystal
M14	Crystal
M15	Crystal
M16	Crystal
M17	Crystal
M18	Crystal
M19	Crystal
M20	Crystal
M21	Crystal
M22	Crystal
M23	Crystal
M25	Meter
M27	Crystal Filter
M28	Crystal Filter
RY1	Relay
S1	Switch
S2	Switch
S3	Switch

WIRING DATA

General-use Hook-up Wire
Shielded Antenna Lead ...
Coiled Microphone Cable .
Ignition Noise Suppressio
Bonding Strap .....

MALLORY PART No.	SPRAGUE PART No.
322	10TS-T22
150	TG-S50
322	10TS-T22
110	TG-S10
410	
410	
410	
110	TG-S10
210	2SS-D10
210	2SS-D10
210	2SS-D10
150	TG-S50
F1A010	225P10491WD3
312	424MC1200J501
110	TG-S10
424	MS-424
420	
210	2SS-D10
210	2SS-D10
150	TG-S50
110	TG-S10
110	TG-S10
110	TG-S10
110	TG-S10
110	TG-S10
110	TG-S10
110	TG-S10
110	TG-S10
F1A010	225P10491WD3
110	TG-S10
110	TG-S10
210	2SS-D10
210	2SS-D10
	30GA-D22
210	2SS-D10
110	TG-S10
150	TG-S50
210	2SS-D10
310	424MC1000J501
110	TG-S10
110	TG-S10
410	
110	TG-S10
410	
110	TG-S10
210	2SS-D10
110	TG-S10
410	
210	2SS-D10
439	
210	2SS-D10
150	TG-S50
D533	10TCC-V33
M210	2SS-D10
	30GA-D22
X410	
X312	424MC1200J501
A110	TG-S10
	30GA-D22
	30GA-D22
M210	2SS-D10
A110	TG-S10
A110	TG-S10
A110	TG-S10
M210	2SS-D10
M210	2SS-D10
A110	TG-S10
A110	TG-S10
A110	TG-S10
A110	TG-S10
A110	TG-S10
A110	TG-S10
M210	2SS-D10
M210	2SS-D10
A150	TG-S50
X312	424MC1200J501
A110	TG-S10
X439	
A110	TG-S10
M210	2SS-D10

PARTS LIST AND DESCRIPTION (CONTINUED)

(When ordering parts, state Model, Part Number, and Description.)

CONTROLS (All wattages 1/2 watt, or less, unless listed)

ITEM No.	FUNCTION	RESIST-ANCE	REPLACEMENT DATA				
			MFGR. PART No.	CENTRALAB PART No.	CLAROSTAT PART No.	CTS—IRC PART No.	MALLORY PART No.
R1	Volume/Switch (AF Gain)	1 M	052-010 (1)	F2-1meg, SRS012,KR1	A47-1meg-Z,RS-2, SW6-12 or [NP-1meg-Z, UP-A-400,NWE-12]	BU1,CF26,SS3,GC	UA16A,SLa500 or US41 or [RU16A, SL38,SL2500,US41] or [U53,US26]
R2	Squelch	100 K		F1-100K, SRS012	A47-100K-S,RS-2 or [NP-100K-S, UP-A-400]	BU2,CF13,SS3,DC1	UA15L,SL2500 or [RU15L,SL39,SL2500] or U41
R3	RF Gain	10 K		F1-10K,SRS012	A47-10K-SRS-2 or [UP-10K-S, UP-A-400]	BU2,CF9,SS3,DC1	UA14L,SL2500 or [RU14L,SL39, SL2500] or U20
R4	Carrier Balance	200 2 W	5905-295 (1)	MR250B or WW-201	A43-200,RS-3 or [NPW-200, UP-A-400]	BU2,WF1,SS3,DC1	VW200 or C200P
R5	"S" Meter Zero	25 K	025-038 (1)	F1-25K (18), SRS004 or TT-26 (18)	B47-25K-S (18), or [NP-25K-S (18), UP-S-010]	BU11 (18),CF11, SS6A	RU253L (18),SN750 or [UA253L (18), SN750] or TA253L (18)

(1) Number on unit.
(18) Use original mounting bracket.

RESISTORS (Power and Special)

ITEM No.	RATING	REPLACEMENT DATA	
		WORKMAN PART No.	MFGR. PART No.
R82	100 (5 W)	5W-SQ-100	

ITEM No.	RATING	REPLACEMENT DATA	
		WORKMAN PART No.	MFGR. PART No.
R83	20 K (6 W)	10W-SQ-20K	

COILS (RF-IF)

ITEM No.	FUNCTION	REPLACEMENT DATA			
		MFGR. PART No.	OTHER IDENTIFICATION	MEISSNER PART No.	MILLER PART No.
L1	RF Choke				
L2	RF Choke				
L3	RF Choke				
L4	RF Choke				
L5	RF Choke				
L6	RF Choke				
L101	Rec Xmit Osc (8 MHz)				
L201	Xmit Mixer (27 MHz)				
L202	Rec Antenna (27 MHz)				
L203	Rec RF (27 MHz)				
L301	Xmit Buffer (27 MHz)				
L302	Rec RF (27 MHz)				
L303	Rec Mixer (10.7 MHz)				
L401	Xmit Driver (27 MHz)				
L501	Final Tank (27 MHz)				
T601	Balance Modulation (10.7 MHz)		100-1451		
T1101	Input IF (10.7 MHz)		100-1445		
T1201	Interstage IF (10.7 MHz)		100-1445		
T1301	Output IF (10.7 MHz).		100-1445		

CHOKE (Audio Output)

ITEM No.	INDUCTANCE	REPLACEMENT DATA				NOTES
		MFGR. PART No.	STANCOR PART No.	THORDARSON PART No.	TRIAD PART No.	
T102	6.2 Hy	272-001 (1)				(1) Number on unit.

TRANSFORMER (Power)

ITEM No.	RATING		REPLACEMENT DATA				NOTES
	PRI.	SEC. 1	MFGR. PART No.	STANCOR PART No.	THORDARSON PART No.	TRIAD PART No.	
T101	120 VAC @ 860 mA 100 W	225 VAC @ 150 mA					
	SEC. 2	SEC. 3					
	12.6 VAC @ 2.5 A						

PARTS LIST AND DESCRIPTION (CONTINUED)

(When ordering parts, state Model, Part Number, and Description.)

TRANSFORMER (Audio Output)

ITEM No.	IMPEDANCE		REPLACEMENT DATA				NOTES
	PRI.	SEC.	MFGR. PART No.	STANCOR PART No.	THORDARSON PART No.	TRIAD PART No.	
T801	3920	3.2		A-3328	22S23	S14Z	

SPEAKER

ITEM No.	TYPE	REPLACEMENT DATA		NOTES
		MFGR. PART No.	QUAM PART No.	
SP1	3 1/2 PM 3.2 ohm		3A05	

FUSE DEVICES

ITEM No.	DESCRIPTION	REPLACEMENT DATA						
		PART No.		BUSS PART No.		LITTELFUSE PART No.		WORKMAN PART No.
		DEVICE	HOLDER	DEVICE	HOLDER	DEVICE	HOLDER	DEVICE
F1	2 A Fast Actin			AGC 2	HKP	312002	342013AL	FG2-2

MISCELLANEOUS

ITEM No.	PART NAME	PART No.	NOTES
M1	Crystal		8.1325 MHz
M2	Crystal		8.1375 MHz
M3	Crystal		8.1425 MHz
M4	Crystal		8.1525 MHz
M5	Crystal		8.1575 MHz
M6	Crystal		8.1625 MHz
M7	Crystal		8.1675 MHz
M8	Crystal		8.1775 MHz
M9	Crystal		8.1825 MHz
M10	Crystal		8.1875 MHz
M11	Crystal		8.1925 MHz
M12	Crystal		8.2025 MHz
M13	Crystal		8.2075 MHz
M14	Crystal		8.2125 MHz
M15	Crystal		8.2175 MHz
M16	Crystal		8.2275 MHz
M17	Crystal		8.2325 MHz
M18	Crystal		8.2375 MHz
M19	Crystal		8.2425 MHz
M20	Crystal		8.2525 MHz
M21	Crystal		8.2575 MHz
M22	Crystal		8.2625 MHz
M23	Crystal		8.2775 MHz
M25	Meter		S/RF
M27	Crystal Filter		10.7 MHz
M28	Crystal Filter		10.7 MHz
RY1	Relay		Xmit-Rec
S1	Switch		Channel Selector
S2	Switch		LSB/AM/USB
S3	Switch		AM/ANL Off/SSB

WIRING DATA

General-use Hook-up Wire ..... Use BELDEN No. 8530 (Solid) Available in 12 Colors
8524 (Stranded) Available in 12 Colors
Shielded Antenna Lead ..... Use BELDEN No. 8214 Lowest-loss (RG-8/U Type)
8237 Low-loss (RG-8/U)
8240 (Solid) Miniature (RG-58/U)
8259 (Stranded) Miniature (RG-58A/U)
Coiled Microphone Cable ..... Use BELDEN No. 8497 3-Conductor,1 Shielded,for Press-to-Talk (Neoprene)
8496 3-Conductor,1 Shielded,for Press-to-Talk (Vinyl)
Ignition Noise Suppression ..... Use BELDEN No. 7300-Series Spark-Plug Sets
Bonding Strap ..... Use BELDEN No. 8661 (3/8 In.)