SAMS

PHOTOFACT

CB RADIO SERIES

CB-54

54

JUNE 1974

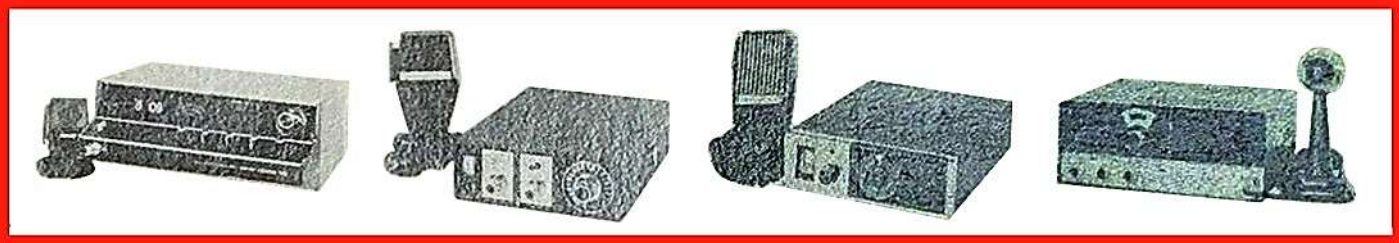

CONTENTS

HOWARD W. SAMS & CO., INC. Indianapolis, Indiana

NOTE

ONLY THOSE PERSONS PROPERLY LICENSED ARE PERMITTED TO MAKE REPAIRS OR ADJUSTMENTS WHICH MAY RESULT IN ILLEGAL OPERATION. (REFER TO FCC RULES AND REGULATIONS PART 95, SUBPARTS C & D.)

The frequency of the transmitter should be checked periodically with a secondary frequency standard to insure proper and legal operation.

Best results will be obtained when adjusting the final RF output circuit if the antenna normally used is connected and the chassis is as nearly in the cabinet as possible.

Connect either 50-ohm dummy load or the normally used antenna system.

MODEL "T"

ALIGNMENT INSTRUCTIONS

Suggested Alignment Tools:
T1, T2, T3, T4, T5, T9, T10, L1, L5, L6, L7 . . . . . GC ELECTRONICS #9295

RECEIVER ALIGNMENT

Connect an AC VTVM across speaker voice coil.
Set squelch control fully cow (standby off).
Set fine tune to mid-position.
Adjust volume control for suitable reading.

SIGNAL GENERATOR	CHANNEL	ADJUST	REMARKS
Connect high side thru a .01 uF. to pin 9 of V2b (6BL8) low side to ground. Set to 455 kHz (mod.)	13	T5, T4, T3	Adjust for maximum.
Connect high side thru a .01 uF. to Pin 9 of V1b (6BL8) low side to ground. Set generator to 11.275 MHz (mod.)	13	T2	Adjust for maximum
Frequency Counter	13		Connect counter to junction of L10 and C66. Frequency should be 14.950 MHz.
Frequency Counter	13		Connect counter to Pin 7 of V11. Frequency should be 23.440 MHz.
Scope	13	L7	Scope to Pin 7 of V11. Adjust for maximum amplitude.
Scope	13	T9	Scope to junction of T9 and C69. Adjust for maximum amplitude.
Connect high side thru .01 uF. to antenna. Connect low side to ground. Set to 27.115 MHz (mod 30% kHz) output of 10 MV	13	T1	Adjust for maximum.
Connect high side thru .01 uF. to antenna. Connect low side to ground. Set to 27.115 MHz (mod 30% kHz) output of 10 MV with 50 MV signal.	13	RV1	Adjust for "S9" reading on "S" note.

HOWARD W. SAMS & CO., INC. Indianapolis, Indiana 46206

© 1974 Howard W Sams & Co., Inc. Printed in U. S. of America 4CY138

TRANSMITTER ALIGNMENT

INDICATOR	ADJUST	REMARKS
Frequency Counter	CV1	Connect an RF watt meter to antenna connector. Connect counter to high side of L6. Adjust for 11.275 MHz.
RF Watt Meter	T10	Connect to antenna connector. Adjust for maximum.
Frequency Counter	L6	Connect RF watt meter to antenna connector, counter to pin 1 of V9. Rotate Channel Selector Switch thru all channels making sure all channels are within FCC specs. If not adjust accordingly.
RF Watt Meter	L5	Connect to antenna connector, adjust for equal output on all channels.
RF Watt Meter	CV5,CV4	Adjust for maximum output. Check voltage drop across R79. Adjust CV5 for Approx. 4 watts.
Modulation Monitor	RV4	Connect to antenna connector. Connect an audio generator thru a .05 uF to pin 1 of microphone jack low side to ground, generator set to 1 kHz @ 40 MV. Adjust for 80% modulation.
TV (ch.2)	L1	Adjust for MINIMUM interference.
RF Watt Meter	Gimmick	Adjust so that "RF" meter (M1) agrees with RF watt meter.

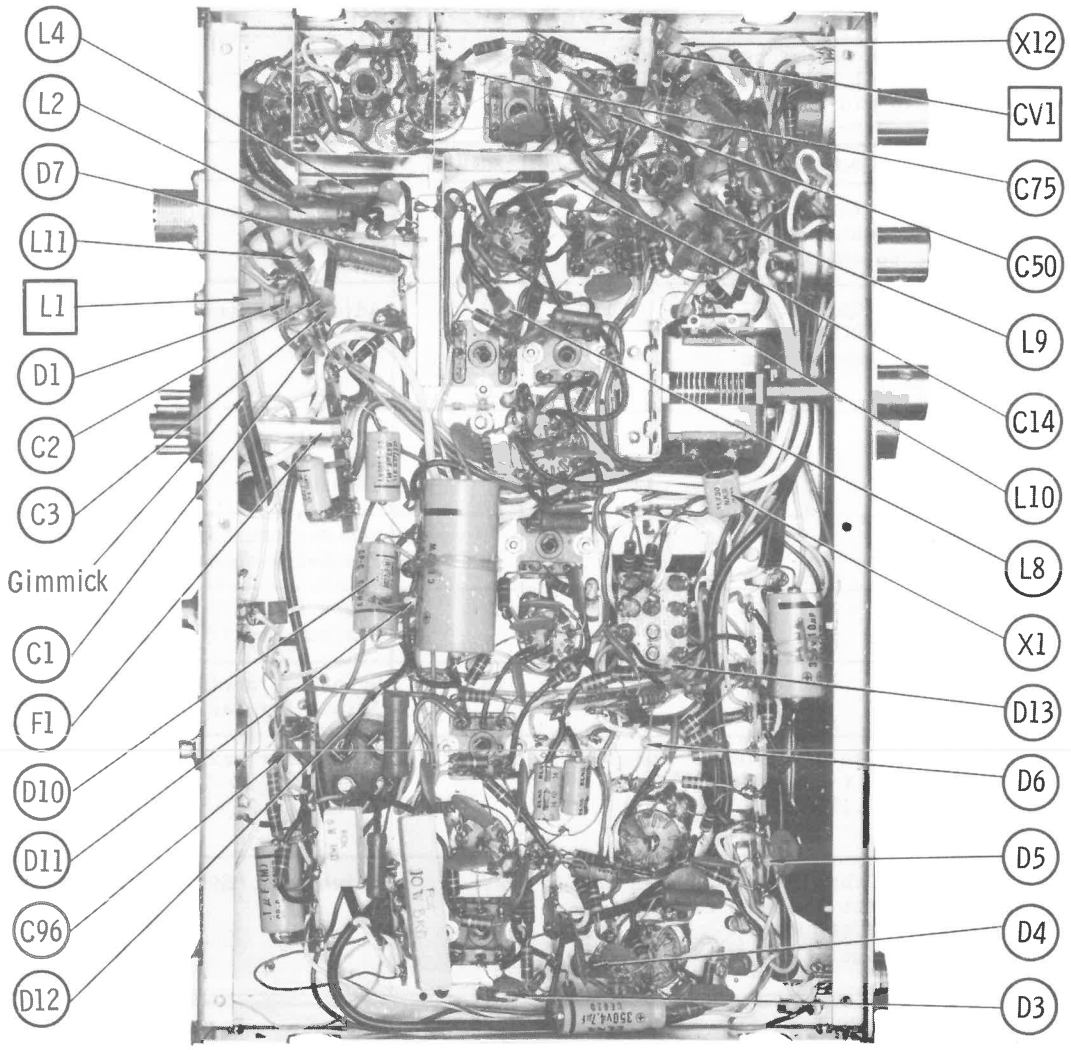

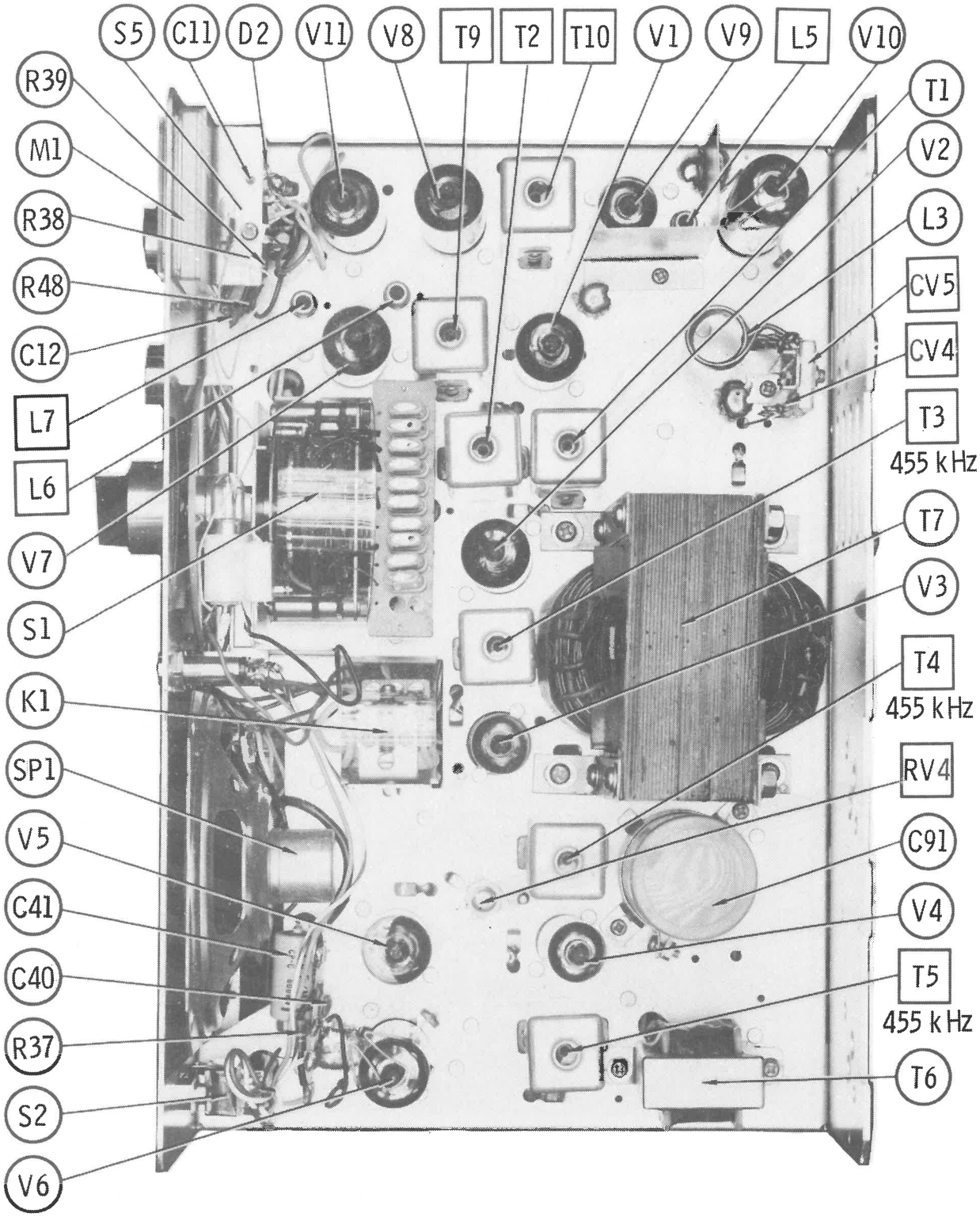
S5
C11
D2
V11
V8
T9
T2
T10
V1
V9
L5
V10
R39
M1
R38
R48
C12
L7
L6
V7
S1
K1
SP1
V5
C41
C40
R37
S2
V6
T1
V2
L3
CV5
CV4
T3
455 kHz
T7
V3
T4
455 kHz
RV4
C91
V4
T5
455 kHz
T6

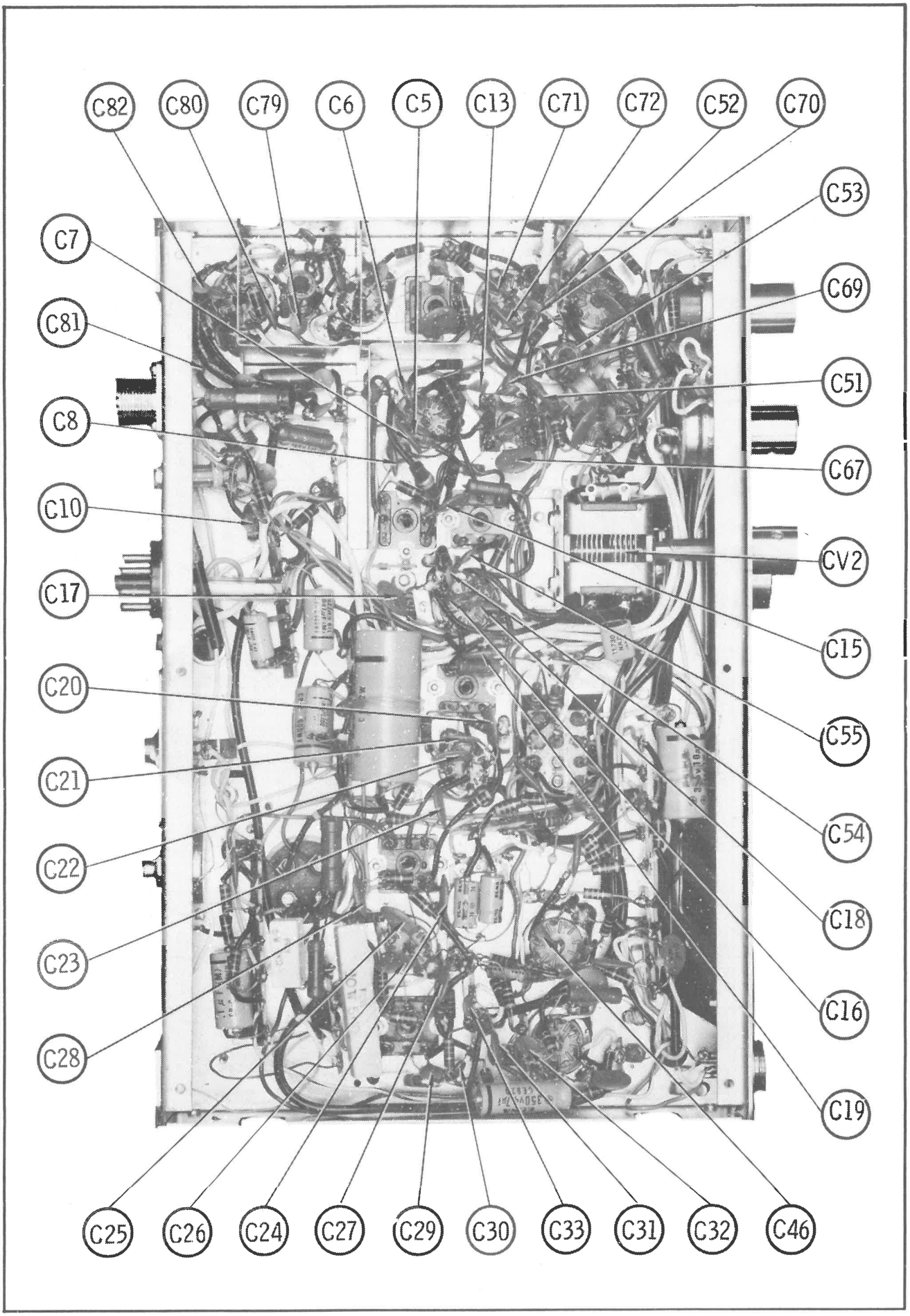
C82
C80
C79
C6
C5
C13
C71
C72
C52
C70
C53
C7
C69
C81
C51
C8
C67
C10
CV2
C17
C15
C20
C55
C21
C54
C22
C18
C23
C16
C28
C19
C25
C26
C24
C27
C29
C30
C33
C31
C32
C46

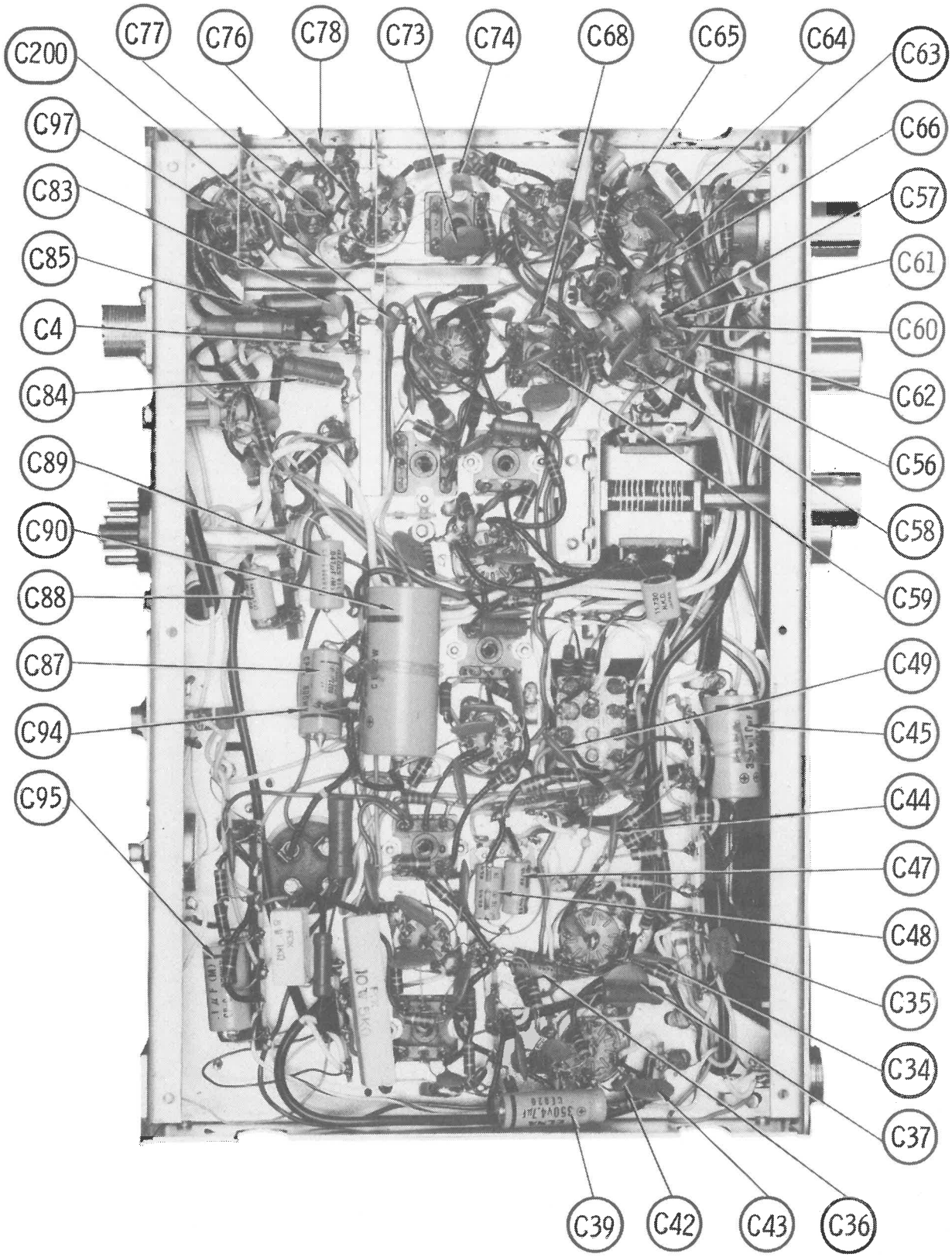
C200
C77
C76
C78
C73
C74
C68
C65
C64
C63
C97
C66
C83
C57
C85
C61
C4
C60
C84
C62
C89
C56
C90
C58
C88
C59
C87
C49
C94
C45
C95
C44
C47
C48
C35
C34
C37
C39
C42
C43
C36

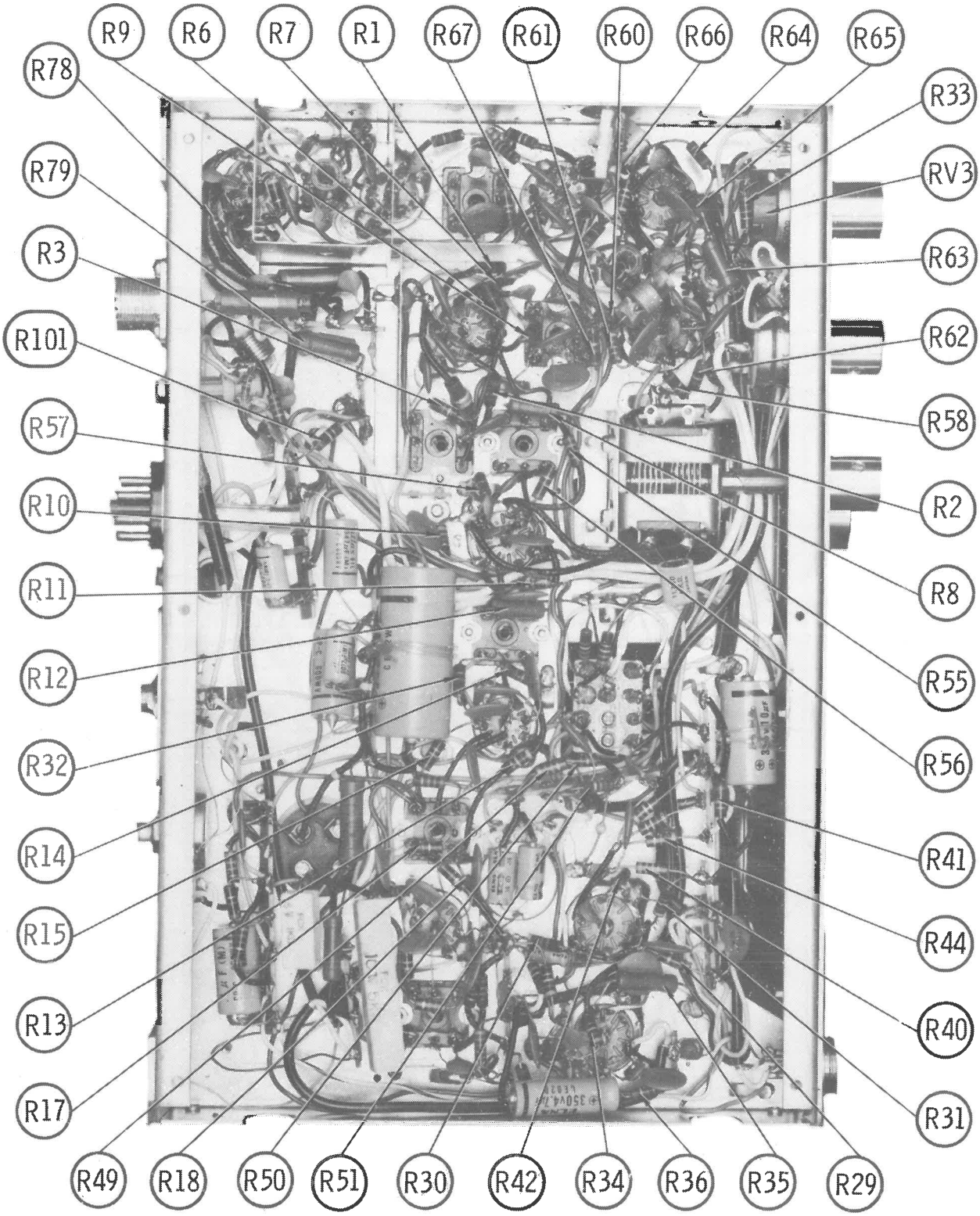
R9
R6
R7
R1
R67
R61
R60
R66
R64
R65
R78
R33
R79
RV3
R3
R63
R101
R62
R57
R58
R10
R2
R11
R8
R12
R55
R32
R56
R14
R41
R15
R44
R13
R40
R17
R31
R49
R18
R50
R51
R30
R42
R34
R36
R35
R29

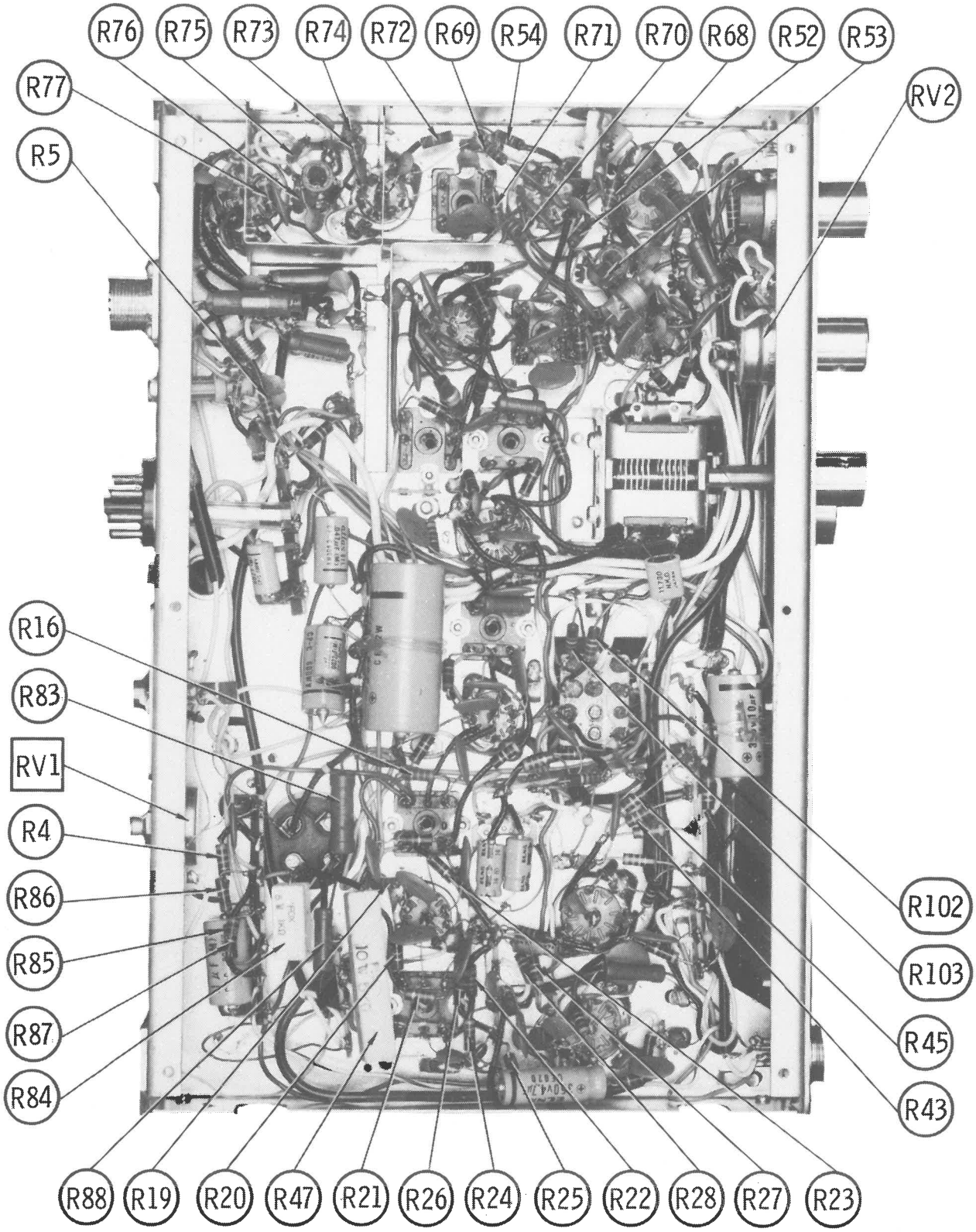
R76
R75
R73
R74
R72
R69
R54
R71
R70
R68
R52
R53
R77
RV2
R5
R16
R83
RV1
R4
R86
R85
R87
R84
R102
R103
R45
R43
R88
R19
R20
R47
R21
R26
R24
R25
R22
R28
R27
R23

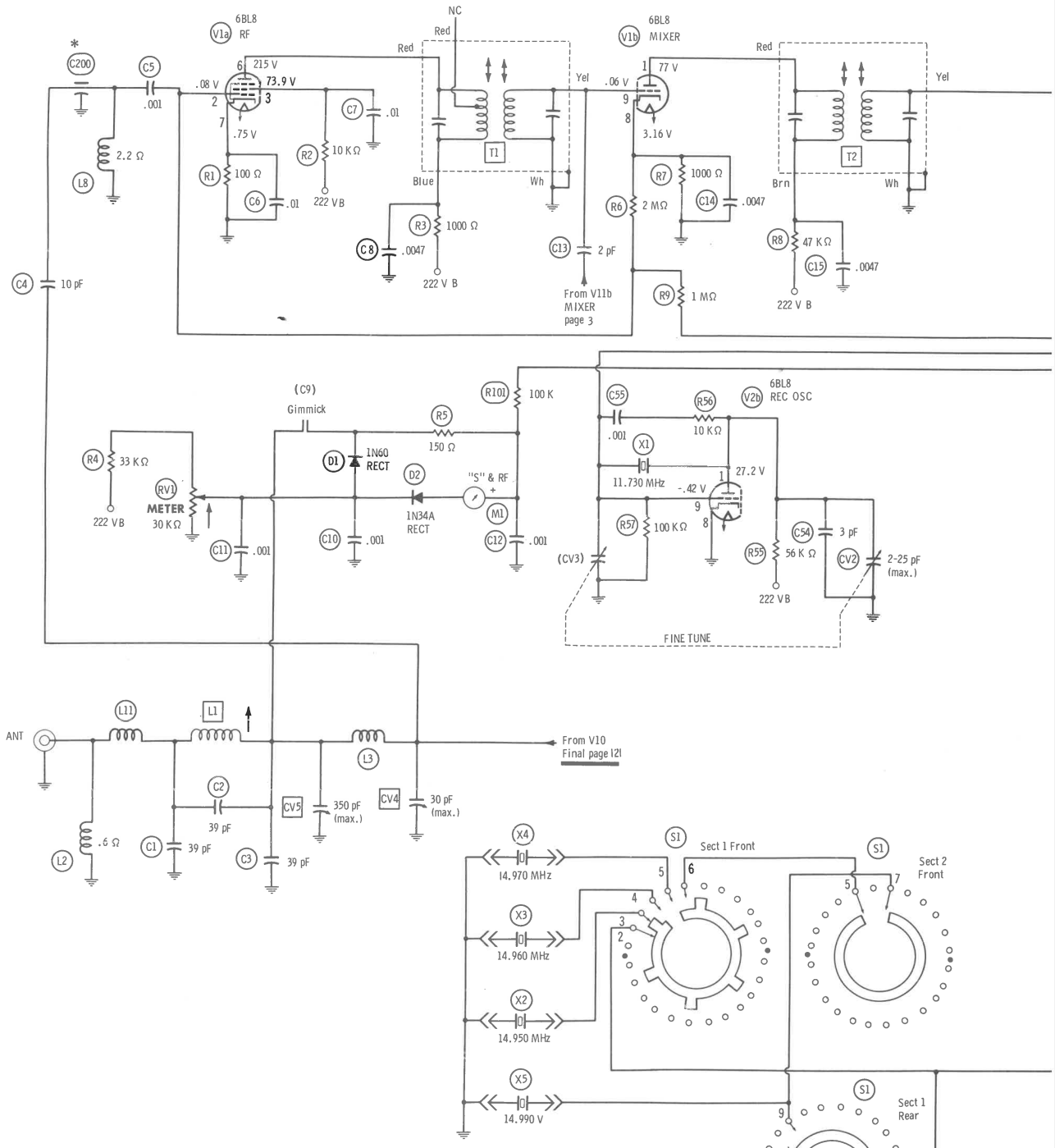

CH	Crystals	CH	Crystal	CH	Crystals
1	X2, X6	8	X5, X7	15	X4, X9
2	X3, X6	9	X2, X8	16	X5, X9
3	X4, X6	10	X3, X8	17	X2, X10
4	X5, X6	11	X4, X8	18	X3, X10
5	X2, X7	12	X5, X8	19	X4, X10
6	X3, X7	13	X2, X9	20	X5, X10
7	X4, X7	14	X3, X9	21	X2, X11

CH	Crystals
22	X3, X11
23	X5, X11

A PHOTOFACT STANDARD NOTATION SCHEMATIC

© Howard W. Sams & Co., Inc. 1974

SEE NOTES ON PAGE 122

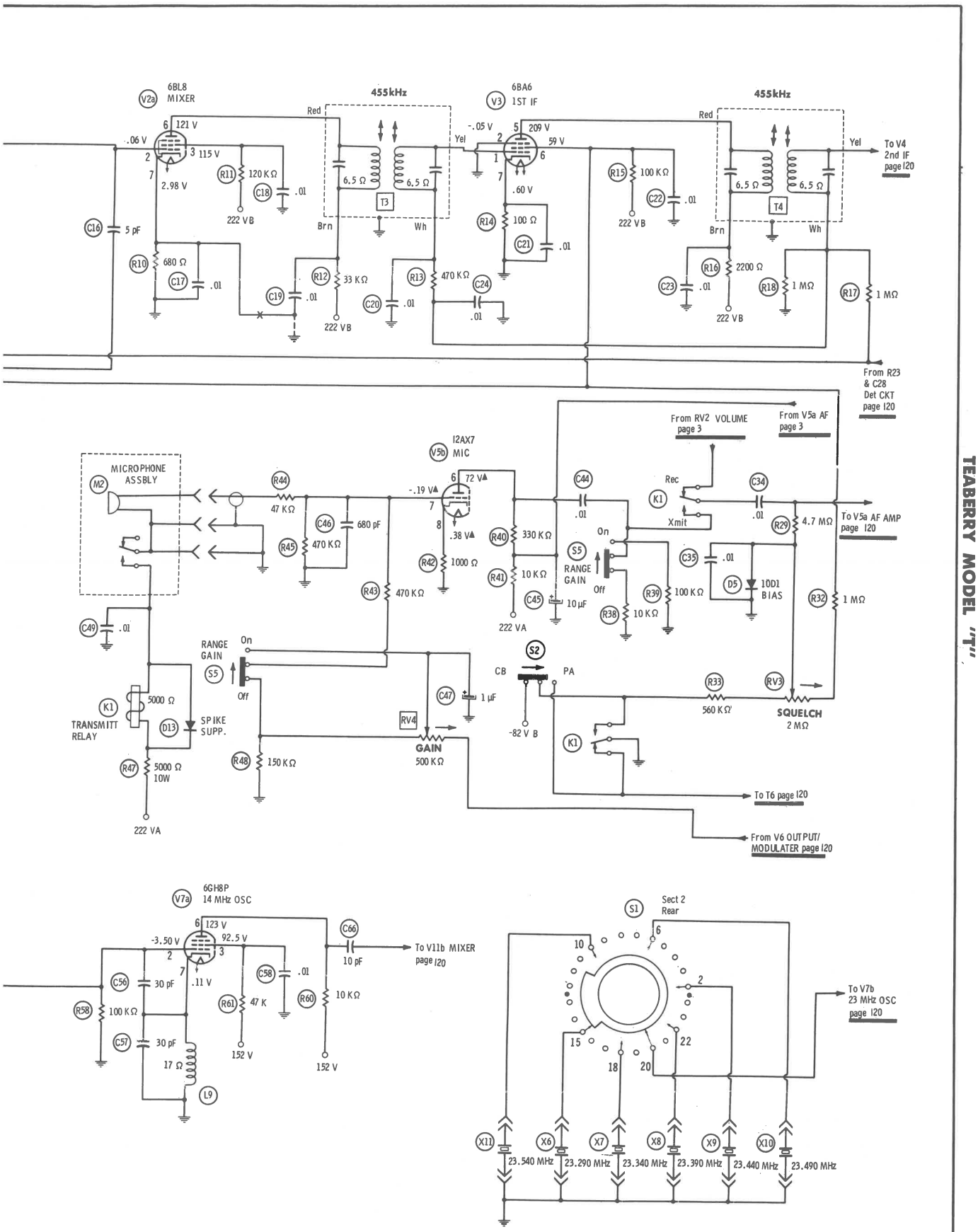

TEABERRY MODEL "T"

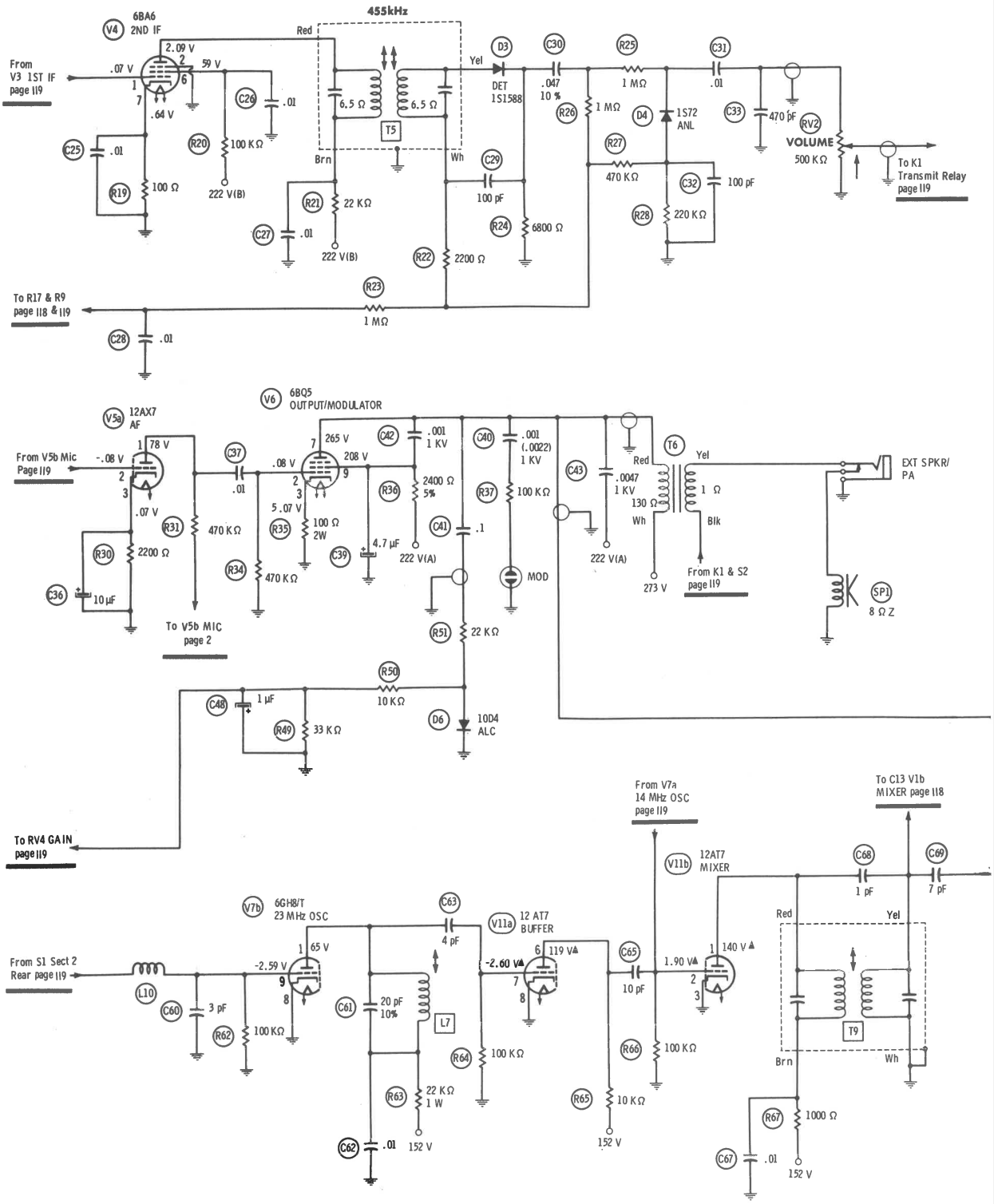

A PHOTOFACT STANDARD NOTATION SCHEMATIC

© Howard W. Sams & Co., Inc. 1974

SEE NOTES ON PAGE 122

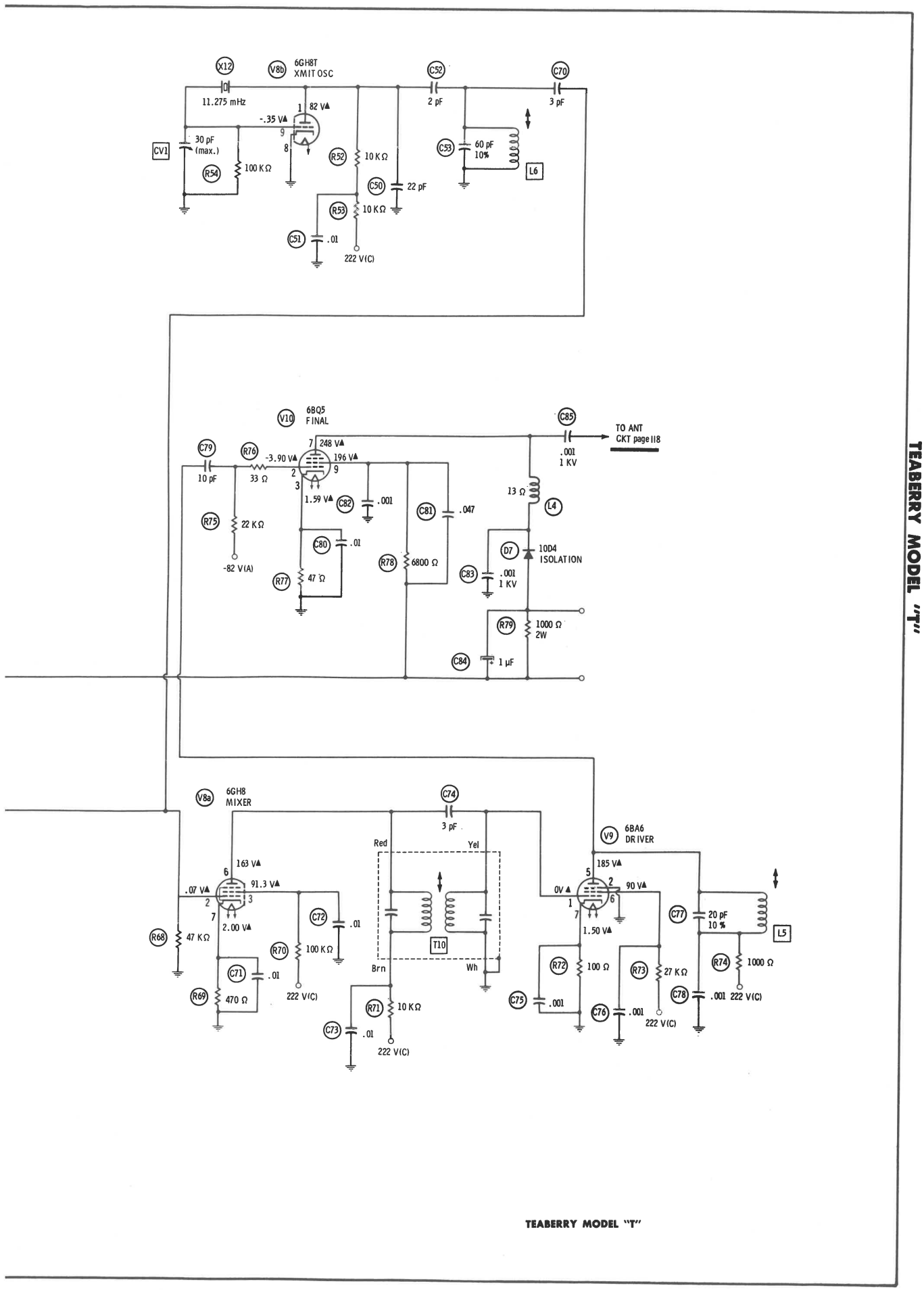

TEABERRY MODEL "T"

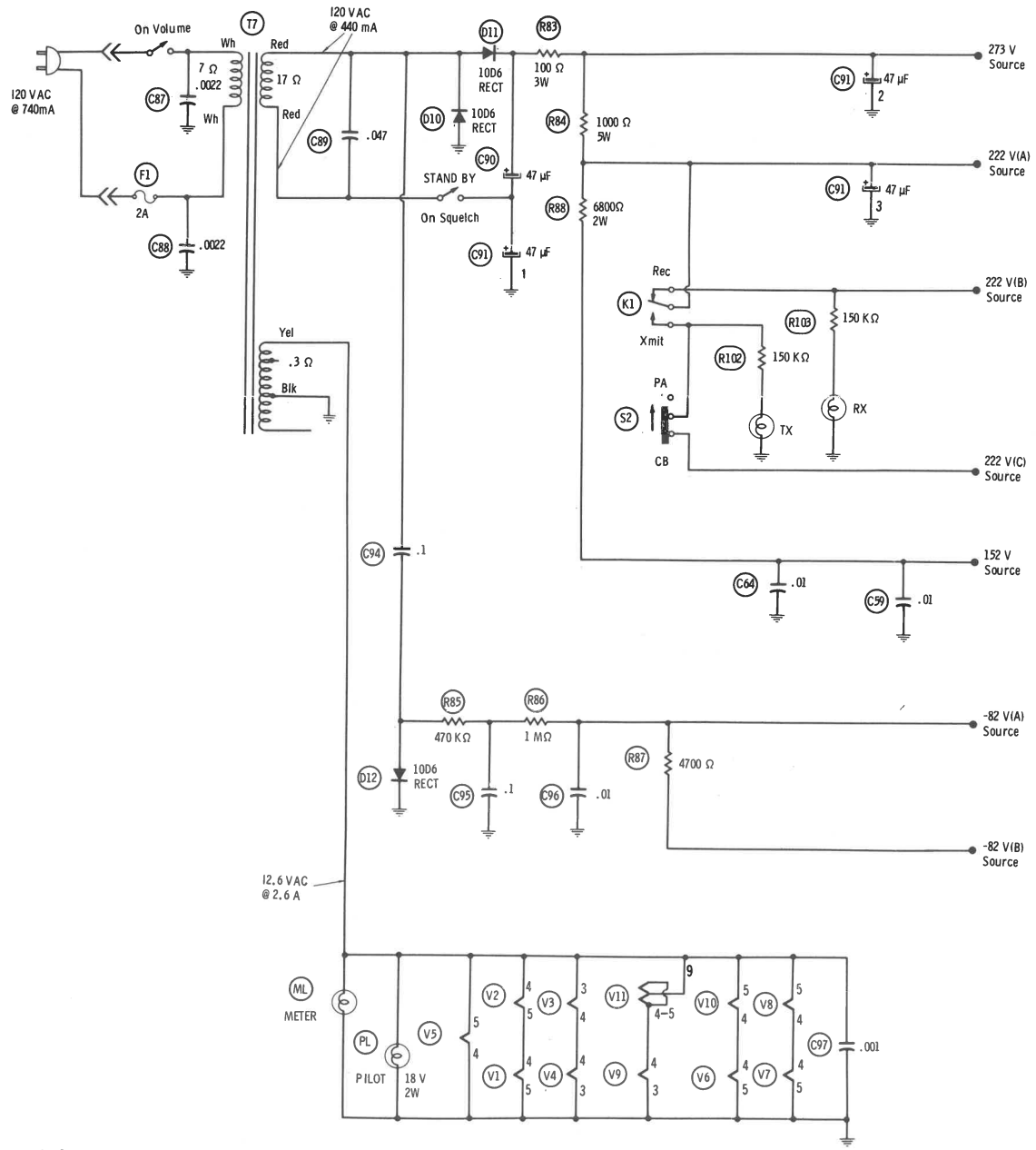

Denotes chassis.
Denotes ground. (Voltage reference unless otherwise indicated)
Indicates connection used in some versions.
Indicates connection not used in some versions.
* Omitted in some versions.
⊖ See parts list.
Value varies; replace with original value.
▲ Measured in transmit position.
● Measured with unit squelched.
NC No Connection.
Measurements taken with switching in position shown unless otherwise indicated.
Values shown in ( ) are used in some applications.
Resistors are 1/2W or less, 10% or 20%, unless otherwise indicated.
Supply voltage maintained at rated value for measurements.
Voltage and resistance measured with VTVM or equivalent meter, no signal applied and controls adjusted for normal operation.
Arrow on control indicates direction of advance.
Numbers assigned to terminals may not be found on the unit.

A PHOTOFACT STANDARD NOTATION SCHEMATIC

© Howard W. Sams & Co., Inc. 1974

TEABERRY MODEL "T"

RESISTANCE MEASUREMENTS

ITEM	PIN 1	PIN 2	PIN 3	PIN 4	PIN 5	PIN 6	PIN 7	PIN 8	PIN 9
V1	48.8 KΩ	983 KΩ	100 KΩ†	3 Ω	0	2 KΩ†	99 Ω	976 Ω	0
V2	56 KΩ†	0	117 KΩ†	0	3	32.8 KΩ†	720 Ω	0	100 KΩ
V3	1.18 MΩ	0	0	3 Ω	3.4 KΩ†	64 KΩ†	100 Ω		
V4	685 KΩ	0	0	3 Ω	3.2 KΩ†	100 KΩ†	103 Ω		
V5	539 KΩ†	4.75 MΩ	2.4 KΩ	0	2	325 KΩ†	270 KΩ	1 KΩ	NC
V6	NC	480 KΩ	100 Ω	3 Ω	0	NC	240 Ω†	NC	3.4 KΩ†
V7	30 KΩ†	100 KΩ	160 KΩ†	3 Ω	0	18 KΩ†	17 Ω	0	115 KΩ
V8	INF	45 KΩ	INF	3 Ω	0	INF	500 Ω	0	100 KΩ
V9	1 Ω	0	0	3 Ω	INF	INF	100 Ω		
V10	NC	1.3 MΩ	45 Ω	0	2 Ω	NC	390 KΩ	NC	60 KΩ
V11	58 KΩ	108 KΩ	0	3 Ω	3 Ω	70 KΩ	0	0	0

† Measured from D11 output.

PARTS LIST AND DESCRIPTION

(When ordering parts, state Model, Part Number, and Description.)

WIRING DATA

General-use Hook-up Wire ..... Use BELDEN No. 8530 (Solid) Available in 12 Colors
8524 (Stranded) Available in 12 Colors
Shielded Antenna Lead ..... Use BELDEN No. 8214 Lowest-loss (RG-8/U Type)
8237 Low-loss (RG-8/U)
8240 (Solid) Miniature (RG-58/U)
8259 (Stranded) Miniature (RG-58A/U)
Coiled Microphone Cable ..... Use BELDEN No. 8497 3-Conductor,1 Shielded,for Press-to-Talk (Neoprene)
8496 3-Conductor,1 Shielded,for Press-to-Talk (Vinyl)
Ignition Noise Suppression ..... Use BELDEN No. 7300-Series Spark-Plug Sets
Bonding Strap ..... Use BELDEN No. 8661 (3/8 In.)

TUBES

AMPEREX		GENERAL ELECTRIC	RCA		SYLVANIA
ITEM No.	USE	TYPE	ITEM No.	USE	TYPE
V1	RF Amp/Mixer	6BL8	V6	AF Output/Modulator	6BQ5
V2	Rec. Osc/Mixer	6BL8	V7	14 MHz Osc/23MHz Osc	6GH8
V3	IF Amp	6BA6	V8	Xmitt Osc./Mixer	6GH8
V4	IF Amp	6BA6	V9	Driver	6BA6
V5	AF/Mike Amp	12AX7	V10	Final	6BQ5

SEMICONDUCTORS

ITEM No.	TYPE / MFGR. No./PART No.	REPLACEMENT DATA						
		GENERAL ELECTRIC PART No.	INTERNATIONAL RECTIFIER PART No.	MALLORY PART No.	MOTOROLA PART No.	RCA PART No.	SPRAGUE PART No.	SYLVANIA PART No.
D1	1N60	1N60	1N60	PTC206	HEP135	SK3088		ECG 109
D2	1N34A	1N34AS	1N34A	PTC207	HEP134	SK3087		ECG 109
D3	1S1588	GE-300	D200	PTC214	HEPR0602	SK3100	RT218	ECG 177
D4	1S72	GE-504A	8D4 or 5A4D	PTC201 or PTC202	HEPR0052	SK3030 or SK3031	RT213 or RT214	ECG 116 or ECG 117
D5	10D1	GE-504A	8D4 or 5A4D	PTC201 or PTC202	HEPR0052	SK3030 or SK3031	RT213 or RT214	ECG 116 or ECG 117
D6	10D4	GE-504A	8D4 or 5A4D	PTC201 or PTC202	HEPR0052	SK3030 or SK3031	RT213 or RT214	ECG 116 or ECG 117
D7	10D4	GE-504A	8D4 or 5A4D	PTC201 or PTC202	HEPR0052	SK3030 or SK3031	RT213 or RT214	ECG 116 or ECG 117
D10	10D6	GE-504A	8D6 or 5A6D	PTC202	HEPR0054	SK3017A or SK3032	RT210 or RT214	ECG 116 or ECG 117
D11	10D6	GE-504A	8D6 or 5A6D	PTC202	HEPR0054	SK3017A or SK3032	RT210 or RT214	ECG 116 or ECG 117
D12	10D6	GE-504A	8D6 or 5A6D	PTC202	HEPR0054	SK3017A or SK3032	RT210 or RT214	ECG 116 or ECG 117

PARTS LIST AND DESCRIPTION (CONTINUED)

(When ordering parts, state Model, Part Number, and Description.)

SEMICONDUCTORS(cont)

ITEM No.	TYPE / MFGR. No./PART No.	REPLACEMENT DATA						
		GENERAL ELECTRIC PART No.	INTERNATIONAL RECTIFIER PART No.	MALLORY PART No.	MOTOROLA PART No.	RCA PART No.	SPRAGUE PART No.	SYLVANIA PART No.
D13		GE-504A	8D4 or 5A4D	PTC201 or PTC202	HEPR0052	SK3030 or SK3031	RT213 or RT214	ECG 116 or ECG 117

ELECTROLYTIC CAPACITORS

ITEM No.	RATING		REPLACEMENT DATA					
			MFGR. PART No.	ARCO PART No.	CENTRALAB PART No.	CORNELL-DUBILIER PART No.	MALLORY PART No.	SPRAGUE PART No.
C36	10	16 V		ME-1-E-010	EA15-10	WBR10-25	MTA10D35	TVA-1145
C39	4.7	350 V		CTA-1360		WBR5-500	TC60A	TVA-1602.5
C45	10	305 V		CTA-1370		WBR10-500	TC62B	TVA-1604
C47	1	160 V		CTA-1400		WBR1-500	TT250X1B	TVA-1434
C48	1	160 V		CTA-1400		WBR1-500	TT250X1B	TVA-1434
C84	1	160 V		CTA-1400		WBR1-500	TT250X1B	TVA-1434
C90	47	350 V		CTA-1450			TC67B	TVA-1612
C91(1)	47	350 V				CC0236A	FP330.9A	TVL-3641
(2)	47	350 V						
(3)	47	350 V						

CAPACITORS

ITEM No.	RATING		MFGR. PART No.	REPLACEMENT DATA				
				ARCO/ELMENCO PART No.	CENTRALAB PART No.	CORNELL-DUBILIER PART No.	MALLORY PART No.	SPRAGUE PART No.
C1	39						CN0439	10TCC-Q39
C2	39						CN0439	10TCC-Q39
C3	39						CN0439	10TCC-Q39
C4	10			CCT0-100	DTZ-10	NP010	CN0410	10TCC-Q10
C5	.001			CCD-102	DD-102	GP1000	GP210	10TS-D10
C6	.01			CCD-103	DD-103	GP10000	JF110	10TS-S10
C7	.01			CCD-103	DD-103	GP10000	JF110	10TS-S10
C8	.0047			CCD-472	DD-472G	GP4700	JF247	10TS-D47
C10	.001			CCD-102	DD-102	GP1000	GP210	10TS-D10
C11	.001			CCD-102	DD-102	GP1000	GP210	10TS-D10
C12	.001			CCD-102	DD-102	GP1000	GP210	10TS-D10
C13	2				DTZ-2R2	NP02P2	CN0522	10TCC-V22
C14	.0047			CCD-472	DD-472G	GP4700	JF247	10TS-D47
C15	.0047			CCD-472	DD-472G	GP4700	JF247	10TS-D47
C16	5					NP05		10TCC-V50
C17	.01			CCD-103	DD-103	GP10000	JF110	10TS-S10
C18	.01			CCD-103	DD-103	GP10000	JF110	10TS-S10
C19	.01			CCD-103	DD-103	GP10000	JF110	10TS-S10
C20	.01			CCD-103	DD-103	GP10000	JF110	10TS-S10
C21	.01			CCD-103	DD-103	GP10000	JF110	10TS-S10
C22	.01			CCD-103	DD-103	GP10000	JF110	10TS-S10
C23	.01			CCD-103	DD-103	GP10000	JF110	10TS-S10
C24	.01			CCD-103	DD-103	GP10000	JF110	10TS-S10
C25	.01			CCD-103	DD-103	GP10000	JF110	10TS-S10
C26	.01			CCD-103	DD-103	GP10000	JF110	10TS-S10
C27	.01			CCD-103	DD-103	GP10000	JF110	10TS-S10
C28	.01			CCD-103	DD-103	GP10000	JF110	10TS-S10
C29	100			CCD-101	DD-101	GP100	GP310	10TS-T10
C30	.047	10%		4DP-3-473		DPMS6S47	EWF4147	4PS-S47
C31	.01			CCD-103	DD-103	GP10000	JF110	10TS-S10
C32	100			CCD-101	DD-101	GP100	GP310	10TS-T10
C33	470			CCD-471	DD-471	GP470	GP347	10TS-T47
C34	.01			CCD-103	DD-103	GP10000	JF110	10TS-S10
C35	.01			CCD-103	DD-103	GP10000	JF110	10TS-S10
C37	.01			CCD-103	DD-103	GP10000	JF110	10TS-S10
C40	.001			CCD-102	DD-102	GP1000	GP210	10TS-D10
C41	.1			4DP-3-104		DPMS4P1	EWF4010	4PS-P10
C42	.001			CCD-102	DD-102	GP1000	GP210	10TS-D10
C43	.0047			CCD-472	DD-472G	GP4700	JF247	10TS-D47
C44	.01			CCD-103	DD-103	GP10000	JF110	10TS-S10
C46	680			CCD-681	DD-681	GP680	GP368	10TS-T68
C49	.01			CCD-103	DD-103	GP10000	JF110	10TS-S10
C50	22				DTZ-25		CN0425	10TCC-Q25
C51	.01			CCD-103	DD-103	GP10000	JF110	10TS-S10
C52	2				DTZ-2R2	NP02P2	CN0522	10TCC-V22
C53	60	10%						MS-46
C54	3							10TCC-V30
C55	.001			CCD-102	DD-102	GP1000	GP210	10TS-D10
C56	30			CCT0-300				10TCC-Q30
C57	30			CCT0-300				10TCC-Q30
C58	.01			CCD-103	DD-103	GP10000	JF110	10TS-S10
C59	.01			CCD-103	DD-103	GP10000	JF110	10TS-S10
C60	3							10TCC-V30
C61	20	10%		DM-15-200J	CPR-20J		SX420	
C62	.01			CCD-103	DD-103	GP10000	JF110	10TS-S10

PARTS LIST AND DESCRIPTION (CONTINUED)

(When ordering parts, state Model, Part Number, and Description.)

CAPACITORS

ITEM No.	RATING	MFGR. PART No.	REPLACEMENT DATA				
			ARCO/ELMENCO PART No.	CENTRALAB PART No.	CORNELL-DUBILIER PART No.	MALLORY PART No.	SPRAGUE PART No.
C63	4				NP03P9		10TCC-V39
C64	.01		CCD-103	DD-103	GP10000	JF110	10TS-S10
C65	10		CCTO-100	DTZ-10	NP010	CN0410	10TCC-Q10
C66	10		CCTO-100	DTZ-10	NP010	CN0410	10TCC-Q10
C67	.01		CCD-103	DD-103	GP10000	JF110	10TS-S10
C63	1				CN0510		10TCC-V10
C69	7			DTZ-6R8	NP06P8	CN0568	10TCC-V68
C70	3						10TCC-V30
C71	.01		CCD-103	DD-103	GP10000	JF110	10TS-S10
C72	.01		CCD-103	DD-103	GP10000	JF110	10TS-S10
C73	.01		CCD-103	DD-103	GP10000	JF110	10TS-S10
C74	3						10TCC-V30
C75	.001		CCD-102	DD-102	GP1000	GP210	10TS-D10
C76	.001		CCD-102	DD-102	GP1000	GP210	10TS-D10
C77	20 10%		DM-15-200J	CPR-20J		SX420	
C78	.001		CCD-102	DD-102	GP1000	GP210	10TS-D10
C79	10		CCTO-100	DTZ-10	NP010	CN0410	10TCC-Q10
C80	.01		CCD-103	DD-103	GP10000	JF110	10TS-S10
C81	.047			DD-403		GP140	
C82	.001		CCD-102	DD-102	GP1000	GP210	10TS-D10
C83	.001		CCD-102	DD-102	GP1000	GP210	10TS-D10
C85	.001		CCD-102	DD-102	GP1000	GP210	10TS-D10
C87	.0022		6DP 1-202	CPR-2000J	DPMS-6D2	PVC622	6PS-D20
C88	.0022		6DP-1-202	CPR-2000J	DPMS-6D2	PVC622	6PS-D20
C89	.047		6DP-3-473		DPMS-6S47	EWF6147	6PS-S47
C94	.1		6DP-4-104		DPMS-6P1	EWF6010	6PS-P10
C95	.1		6DP-4-104		DPMS-6P1	EWF6010	6PS-P10
C96	.01		CCD-103	DD-103	GP10000	JF110	10TS-S10
C97	.001		CCD-102	DD-102	GP1000	GP210	10TS-D10

CONTROLS (All wattages 1/2 watt, or less, unless listed)

ITEM No.	FUNCTION	RESIST-ANCE	REPLACEMENT DATA				
			MFGR. PART No.	CENTRALAB PART No.	CLAROSTAT PART No.	CTS—IRC PART No.	MALLORY PART No.
RV1	Meter Adjust	30 K		F1-50K, SRS006	A47-30K-S,RS-3 or [NP-30K-S, UP-A-400]	BU1,CF12,SS5,DC1	UA34L,SN1000 or [RU34L,SL38,SN1000 or U30]
RV2	Volume/Power Switch	500 K		F1-500K, SRS012,KR1	A47-500K-S,RS-3, SWE-12 or [NP-500K-S UP-A-400,NWE-12]	BU1,CF1b,SS5,GC	UA55L,SN1000,US41 or [RU55L,SL38, SN1000,US41 or U50,US26]
RV3	Squelch/Stand by switch	2 meg		F1-2meg, SRS006,KR1	A47-2 meg-S,RS-3, SWE-12 or [NP-2 meg-S UP-A-400,NWE-12]	BU1,CF19,SS5,GC	UA26L,SN1000,US41 or [RU26L,SL38, SN1000,US41 or U56, US26]
RV4	Gain	500 K		F1-500K, SRS012	A47-500K-S, RS-3 or [NP-500K-S UP-A-400]	BU1,CF16,SS5,DC1	UA55L,SN1000 or [RU55L,SL38,SN100 or U50]

RESISTORS (Power and Special)

ITEM No.	RATING	REPLACEMENT DATA	
		WORKMAN PART No.	MFGR. PART No.
R8	33 K (1 W Film)		
R12	7 K (1 W Film)		
R35	1000 (2 W Film)		
R47	5000 (10 W WW)	10W-SQ5K	
R63	22 K (1 W Film)		

ITEM No.	RATING	REPLACEMENT DATA	
		WORKMAN PART No.	MFGR. PART No.
R79	1000 (2 W Film)		
R83	100 (3 W Film)	3G-100	
R84	1000 (5 W WW)	5W-SQ1K	
R88	6800 (2 W Film)		

COILS (RF-IF)

ITEM No.	USE	REPLACEMENT DATA			
		PART No.	MEISSNER PART No.	MILLER PART No.	REMARKS
L1	TVI Trap				
L2	RF Choke		19-1003	4608	
L3	Final Tank (12 Turns)				
L4	RF Choke		19-6033	74F335AI	
L5	Driver				
L6	Xmit Osc				
L7	Rec-Xmit Osc				
L8	RF Choke		19-6022	72F225AP	

PARTS LIST AND DESCRIPTION (CONTINUED)

(When ordering parts, state Model, Part Number, and Description.)

COILS (RF-IF)(cont)

ITEM No.	USE	REPLACEMENT DATA			
		PART No.	MEISSNER PART No.	MILLER PART No.	REMARKS
L9	RF Choke		19-3500	6174	
L10	RF Choke		19-1000	74F106AP	
L11	Ant (8 Turns)				
T1	Rec RF				
T2	Rec Mixer				
T3	Rec Mixer				
T4	Input IF				
T5	Output IF				
T9	Rec-Xmit Mixer				
T10	Xmit Buffer				

TRANSFORMER (Audio Output)

ITEM No.	IMPEDANCE		REPLACEMENT DATA				NOTES
	PRI.	SEC.	MFGR. PART No.	STANCOR PART No.	THORDARSON PART No.	TRIAD PART No.	
T6	9800	8					

TRANSFORMER (Power)

ITEM No.	RATING		REPLACEMENT DATA				NOTES
	PRI.	SEC. 1	MFGR. PART No.	STANCOR PART No.	THORDARSON PART No.	TRIAD PART No.	
T7	120 VAC @ 740 mA (1)	120 VAC @ 440 mA (1)					(1) Transmit
	SEC. 2	SEC. 3					
	12.6 VAC @ 2.6A (1)						

SPEAKER

ITEM No.	TYPE	REPLACEMENT DATA		NOTES
		MFGR. PART No.	QUAM PART No.	
SP1	4" PM 8 ohm		4A05Z8	

FUSE DEVICES

ITEM No.	DESCRIPTION	REPLACEMENT DATA						
		PART No.		BUSS PART No.		LITTELFUSE PART No.		WORKMAN PART No.
		DEVICE	HOLDER	DEVICE	HOLDER	DEVICE	HOLDER	DEVICE
F1	2 A Quick acting pigtail			GJV2		318002		

MISCELLANEOUS

ITEM No.	PART NAME	PART No.	NOTES
M1	Meter		"S"/RF
X1	Crystal		11.730 MHz
X2	Crystal		14.950 MHz
X3	Crystal		14.960 MHz
X4	Crystal		14.970 MHz
X5	Crystal		14.990 MHz
X6	Crystal		23.290 MHz
X7	Crystal		23.340 MHz
X8	Crystal		23.390 MHz
X9	Crystal		23.440 MHz
X10	Crystal		23.490 MHz
X11	Crystal		23.540 MHz
X12	Crystal		11.275 MHz
S1	Switch		Channel Selector
S2	Switch		PA/CB
S5	Switch		Range Gain

NOTE

ONLY THOSE PERSONS PROPERLY LICENSED ARE PERMITTED TO MAKE REPAIRS OR ADJUSTMENTS WHICH MAY RESULT IN ILLEGAL OPERATION. (REFER TO FCC RULES AND REGULATIONS PART 95, SUBPARTS C & D.)

The frequency of the transmitter should be checked periodically with a secondary frequency standard to insure proper and legal operation.

Best results will be obtained when adjusting the final RF output circuit if the antenna normally used is connected and the chassis is as nearly in the cabinet as possible.

Connect either 50-ohm dummy load or the normally used antenna system.

MODELS Cobra 132, Cobra 135
(Early & Late Prod.)

HOWARD W. SAMS & CO., INC. Indianapolis, Indiana 46206

© 1974 Howard W Sams & Co., Inc. Printed in U. S. of America 4CY133

ALIGNMENT

Suggested Alignment Tools:	GC ELECTRONICS
C1, C7, C20, C116, C302, C304, C306, C308, C310, C312, C314, C316, C318, C320, C322, C324, C326, C328	#8290, 5000
T1 thru T14, T301 thru T305	#9089, 8868
T16, L3, L5, L8, L9	#9440
T15, L301	#8869

LATE VERSION

SYNTHESIZER

INDICATOR	CHANNEL	ADJUST	FREQUENCY	REMARKS
Frequency Counter	1	C320	6.000 MHz	Connect short between TP301 and TP303. Connect frequency counter between TP303 and TP304. Mode switch to USB or LSB.
	2	C318	6.010 MHz	
	3	C316	6.020 MHz	
	4	C314	6.040 MHz	
Frequency Counter	1	C312	15.965 MHz	Disconnect short between TP301 and TP303. Short TP302 and TP303. Mode switch to USB or LSB.
	2	C310	16.015 MHz	
	5	C308	16.065 MHz	
	13	C306	16.115 MHz	
	17	C304	16.165 MHz	
	21	C302	16.215 MHz	
Frequency Counter		L301	12.8023 MHz	Disconnect frequency counter from TP303 and TP304 and connect between TP305 and TP309. Set Mode Selector to USB. Set Voice Lock fully CW.
Frequency Counter		R331	12.7977 MHz	Set Mode switch to LSB. Set Voice Lock fully CCW.
Frequency Counter		R329	12.8007 MHz	Set Mode switch to USB. Set Voice Lock fully CCW.
Frequency Counter		R326	12.7993 MHz	Set Mode switch to LSB. Set Voice Lock fully CW.
Oscillator (Response to 30 MHz)		T301, T302		Disconnect short from TP302 and TP303. Remove Frequency Counter from TP305 and TP309. Short between TP308 and TP309. Connect oscilloscope to TP305 and TP309. Tune for maximum.
Oscilloscope (Response to 30 MHz)		T303, T304, T305		Remove oscilloscope from TP305 and TP309. Disconnect short from TP308 and TP309. Connect Oscilloscope to TP306 and TP307. Tune for maximum. Typical reading should be 0.2 V p-p.

EARLY VERSION

SYNTHESIZER

INDICATOR	CHANNEL	ADJUST	FREQUENCY	REMARKS
Frequency Counter	1	C322	7.4615 MHz	Connect short between TP301 and TP310. Connect Frequency Counter between TP304 and TP304. Mode switch to USB.
	2	C324	7.4715 MHz	
	3	C326	7.4815 MHz	
	4	C328	7.5015 MHz	

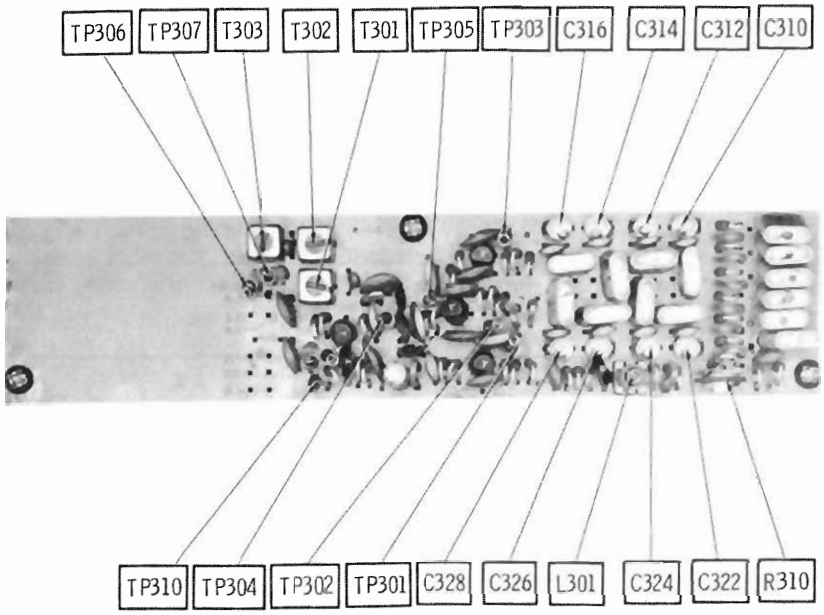

SYNTHESIZER BOARD - EARLY VERSION

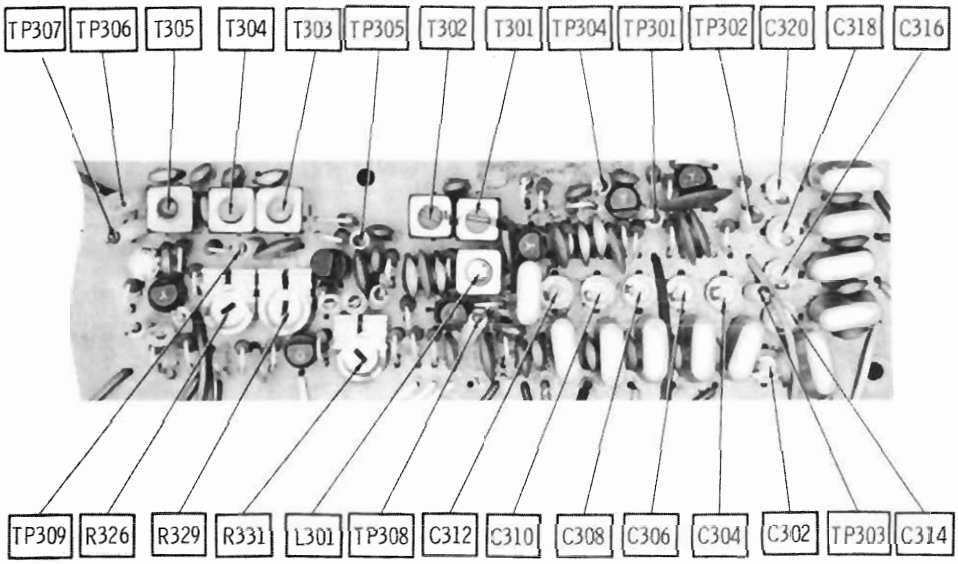

SYNTHESIZER BOARD - LATE VERSION

EARLY VERSION

SYNTHESIZER

INDICATOR	CHANNEL	ADJUST	FREQUENCY	REMARKS
Frequency Counter	1	C310	7.4585 MHz	Same as above. Mode Switch to LSB.
	2	C312	7.4685 MHz	
	3	C314	7.4785 MHz	
	4	C316	7.4985 MHz	
Frequency Counter	13	L301	11.8557 MHz	Disconnect short between TP301 and TP310. Short TP302 and TP305. Mode switch to USB. Set Voice Lock fully CW.
Frequency Counter	13	R310	11.8543 MHz	Set Voice Lock fully CCW.
Oscilloscope (Response to 30 MHz)	13	T301, T302, T303		Remove Counter from TP303 and TP305. D sconnect TP302 and TP305. Connect Oscilloscope to TP306 and TP307. Tune for maximum. Typical voltage should be 0.6 V p-p.

RECEIVER ALIGNMENT

Connect an AC VTVM across Speaker Voice Coil.
Set Squelch maximum CCW, RF Gain maximum CW, Voice Lock Center (mid scale), Noise Blanker off. Mode switch in AM. Adjust Volume Control for suitable reading.

SIGNAL GENERATOR	CHANNEL	ADJUST	REMARKS
Connect high side thru a .01 uF to TP5, low side to TP6. Set to 455 kHz (Mod.) 10 uV.	Any	T12, T13	Adjust for maximum.
Connect high side thru a .01 uF to base of Q11, low side to ground. Set to 7.8 MHz (Mod.) 3 uV.	Any	T10 T11	Adjust for maximum.
Connect high side thru a .01 uF to antenna connector, low side to ground. Set to 27.115 MHz (Mod.) 0.5 uV.	13	T9, T8, T7	Adjust for maximum.
Connect high side thru a .01 uF to antenna connector, low side to ground. Set to 27.115 MHz (Mod.) 100 uV.	13	R91	Adjust for S9 reading on "S" meter.
Connect high side thru a .01 uF to antenna connector, low side to ground. Set to 27.115 MHz (No Mod.) 0.25 uV.	13	R204	Rotate Squelch control until the signal has just been muted. Advance signal generator output level until squelch just breaks. It should take less than 0.5 uV increase. Rotate squelch control fully CW. Advance signal generator output. Adjust so that squelch breaks between 300 and 1500 uV.

SSB

TRANSMITTER ALIGNMENT

INDICATOR	ADJUST	REMARKS
Frequency Counter	C7	Connect frequency counter to TP1 and TP2. Set mode switch to USB. Adjust for frequency of 7.8015 MHz.
Frequency Counter	C1	Connect frequency counter to TP1 and TP2. Set mode switch to LSB. Adjust for frequency of 7.7985 MHz.
Oscilloscope (Response to 30 MHz)	T1,T2, T3,T4, T5,T6	Remove jumper at TP3, connect oscilloscope between TP3 and TP4. Set channel selector to 11. Set Mode switch to either USB or LSB. Connect Audio signal generator to input terminal of microphone connector. Inject a 1 kHz 3 mV signal. Key transmitter and adjust for maximum. After T6 has been adjusted for maximum, rotate 2 full turns CW. Reconnect TP3.
RF Wattmeter 0-500 mA DC Milliameter	R121	Connect wattmeter to antenna jack. Remove jumper at TP9, connect meter to L4 and TP9. Short microphone input. Key transmitter. Adjust bias for 30 mA.
RF Wattmeter 0-500 mA DC Milliameter	R130	Connect wattmeter to antenna jack. Remove jumper at TP10, connect meter to L7 and TP10. Short microphone input. Key transmitter. Adjust bias for 30 mA.
RF Wattmeter	T16, L5, L8	Connect wattmeter to antenna jack. Set mode selector to either USB or LSB. Short TP11 to TP12. Connect Audio signal generator to input terminal of microphone jack. Inject a 1 kHz 15 mV signal. Key transmitter. Adjust for maximum power output.
RF Wattmeter	R136	Disconnect TP11 and TP12. Adjust for 9 Watts power output.
Oscilloscope	R23, C20	Short microphone input to ground. Set Mode switch to either USB or LSB. Key transmitter and adjust for MINIMUM indication on scope. Output voltage should be less than 0.6 V p-p.

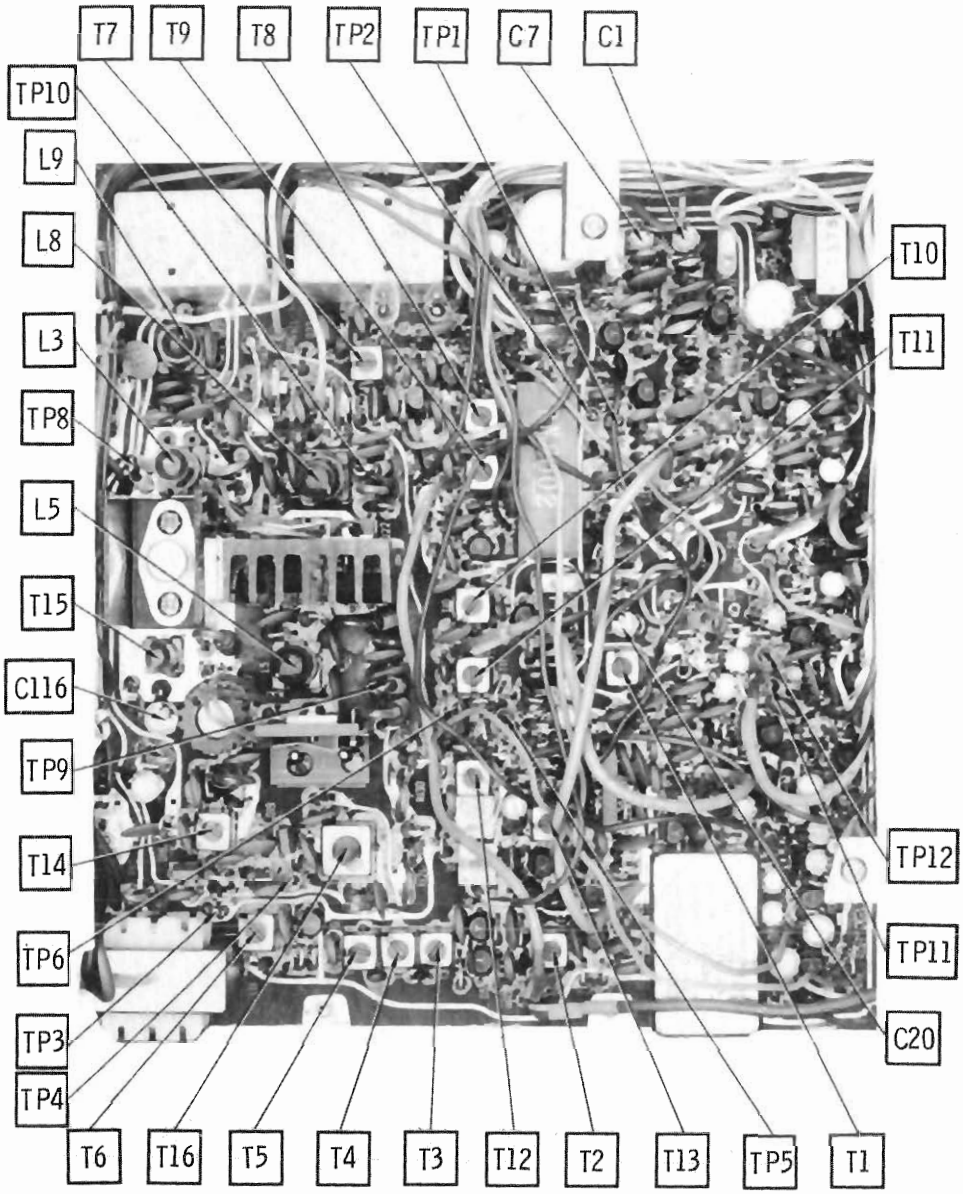

AM

TRANSMITTER ALIGNMENT

INDICATOR	ADJUST	REMARKS
RF Wattmeter	T14, T15, L3	Connect Wattmeter to antenna jack. Mode switch to AM. Key transmitter. Adjust for maximum.
RF Wattmeter	C116	Connect Wattmeter to antenna jack. Mode switch to AM. Key transmitter. Adjust for 3.8 Watts power output.
TV set CH2	L9	Key transmitter. Adjust for MINIMUM interferenc Adjust for MINIMUM interference.
0-500 mA DC Milliameter	C116	Connect Watteeter to antenna jack. Remove jumepr at TP8, connect meter between TP8 and Collector of Q18. Adjust for 4 Watts.

A Howard W. Sams CIRCUITRACE Photo

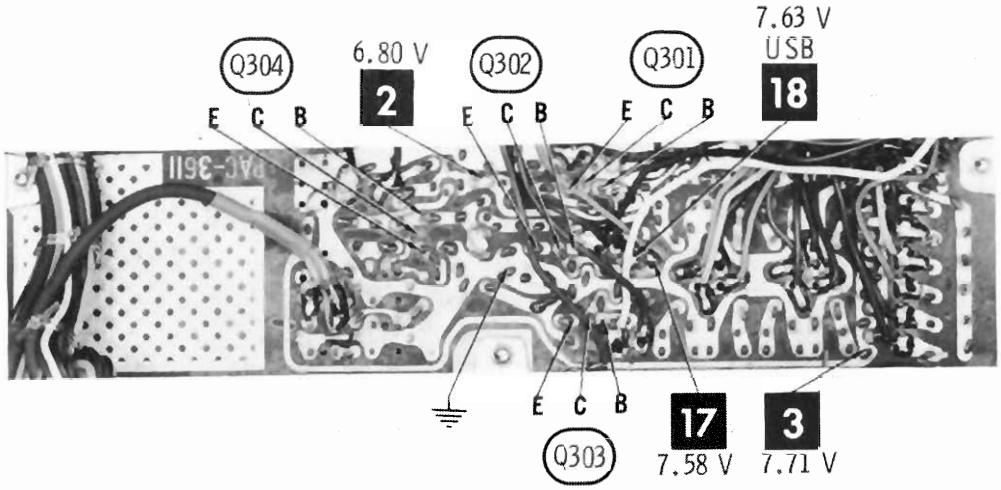

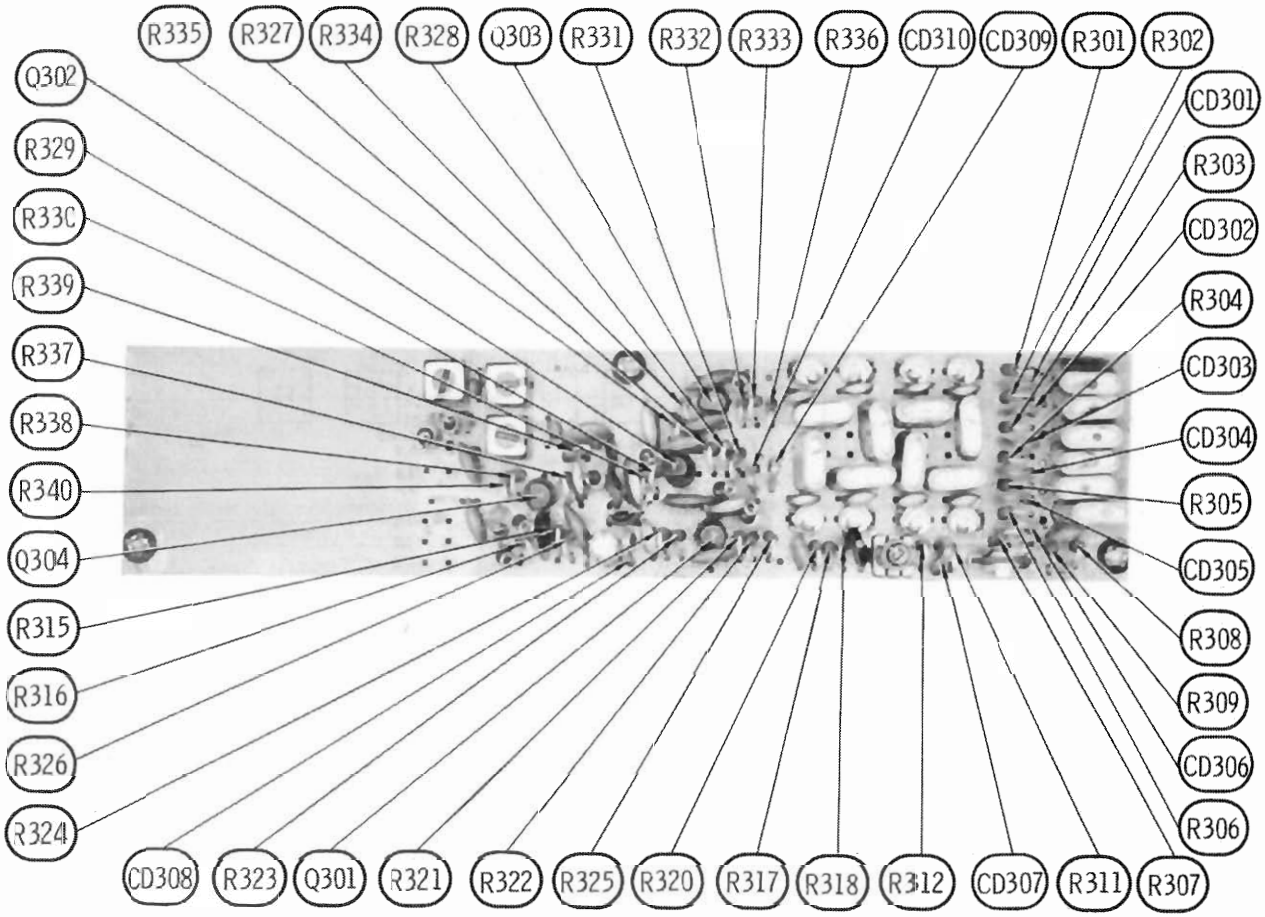

SYNTHESIZER BOARD - EARLY VERSION

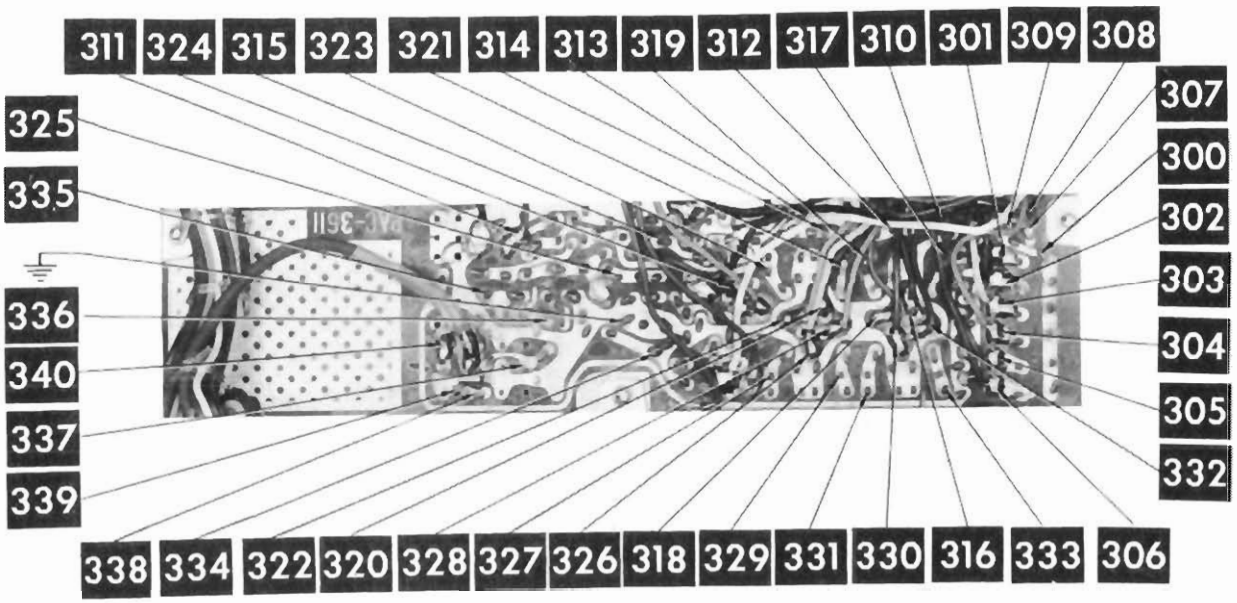

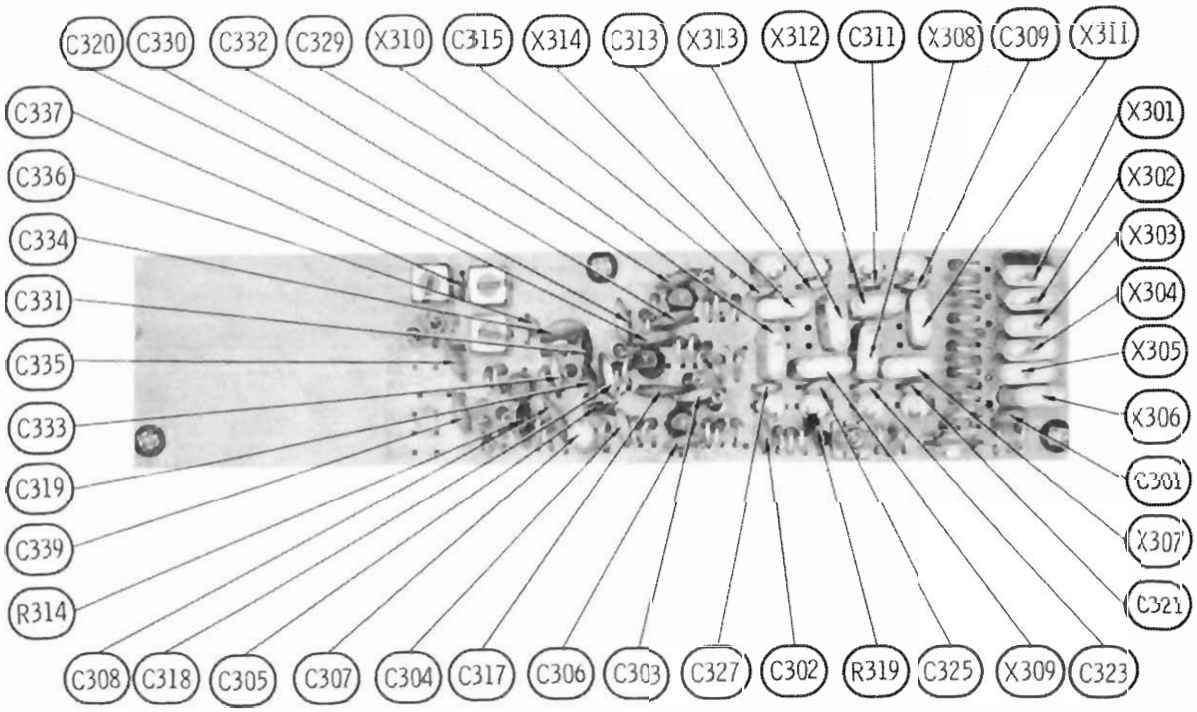

SYNTHESIZER BOARD - EARLY VERSION

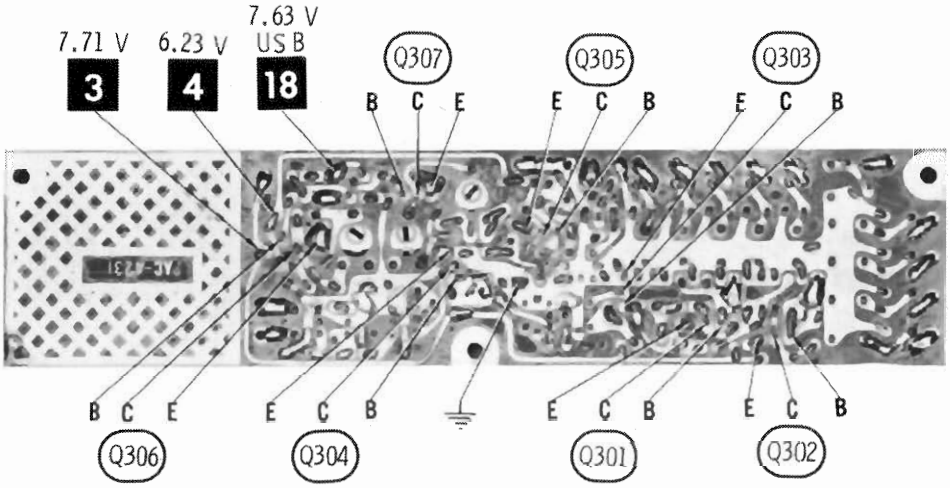

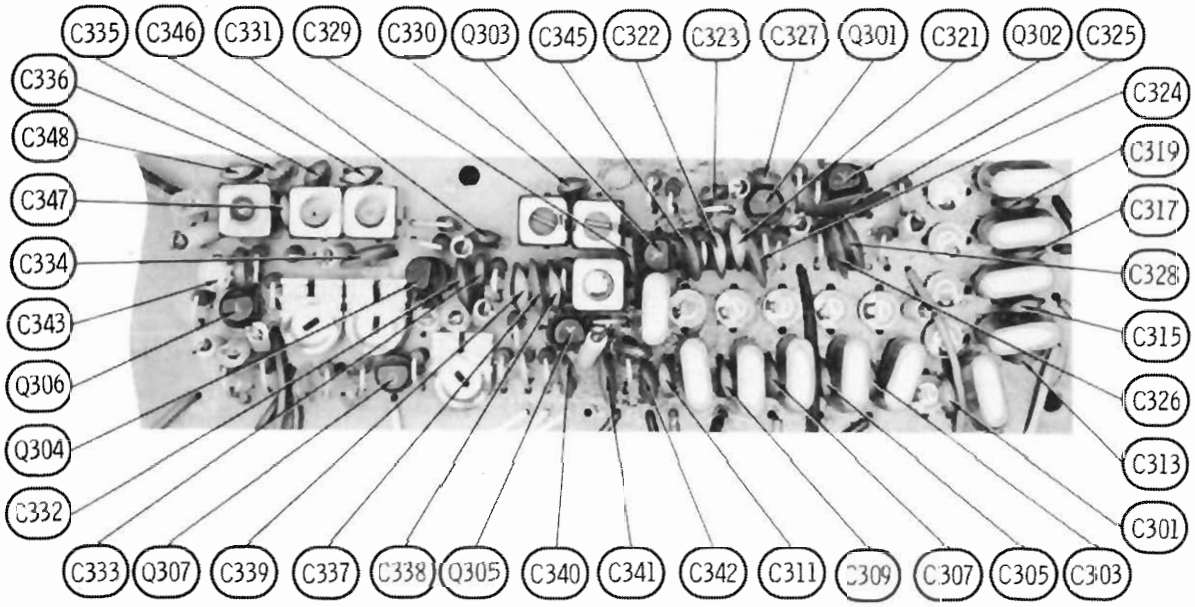

SYNTHESIZER BOARD - LATE VERSION

A Howard W. Sams CIRCUITRACE® Photo

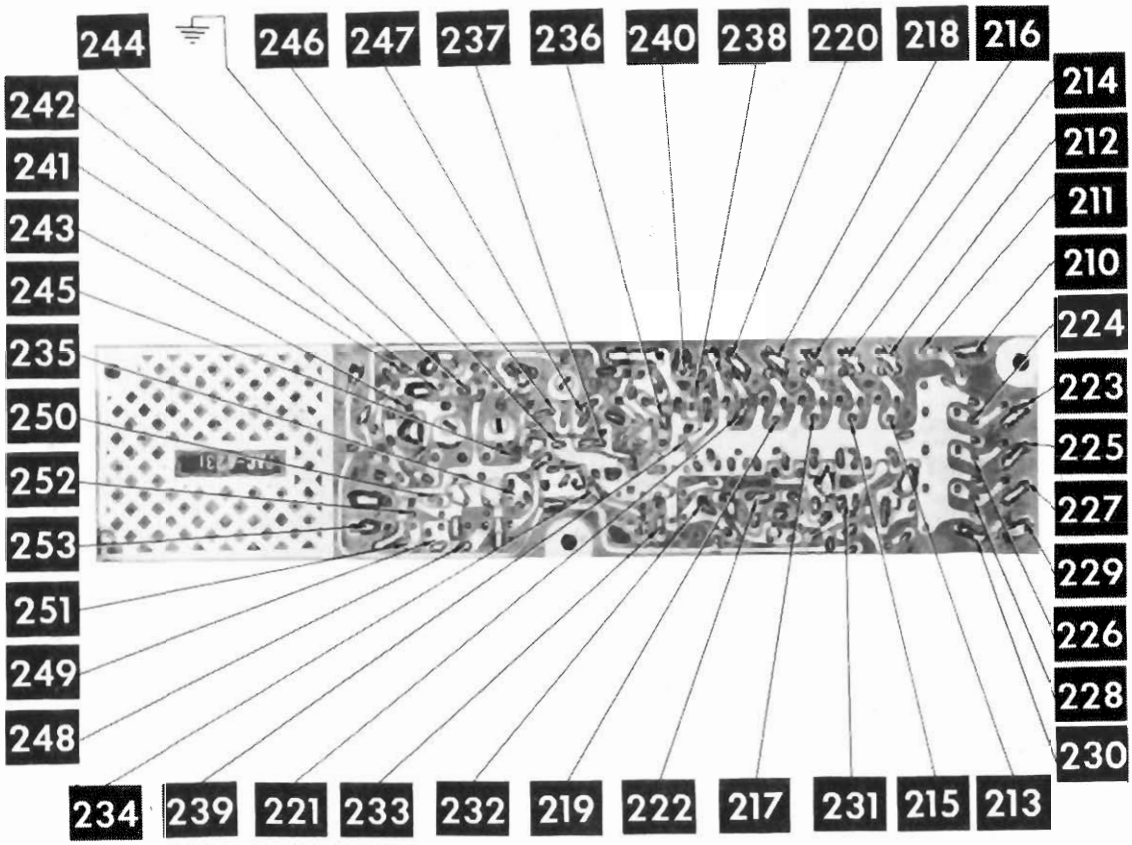

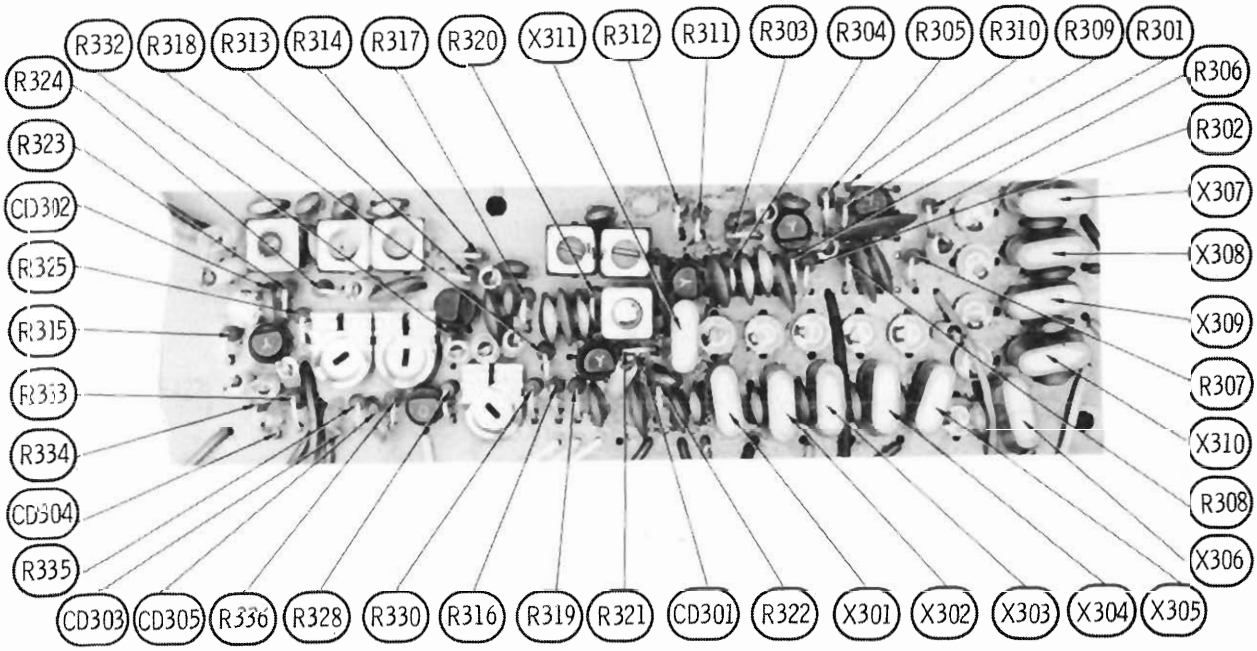

SYNTHESIZER BOARD - LATE VERSION

A Howard W. Sams CIRCUITRACE Photo

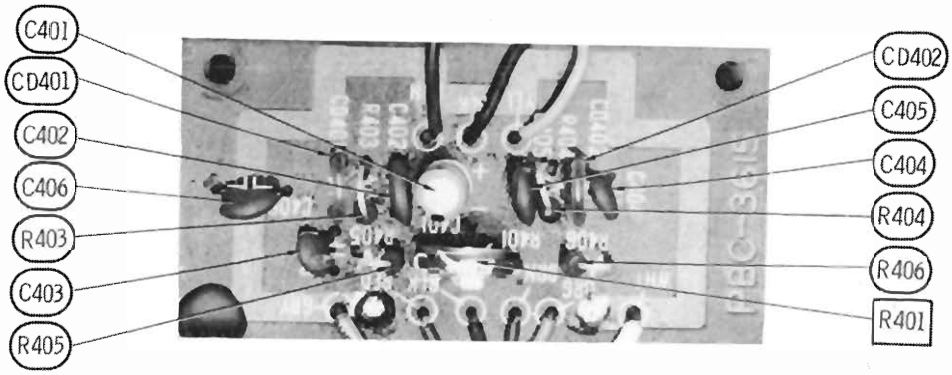

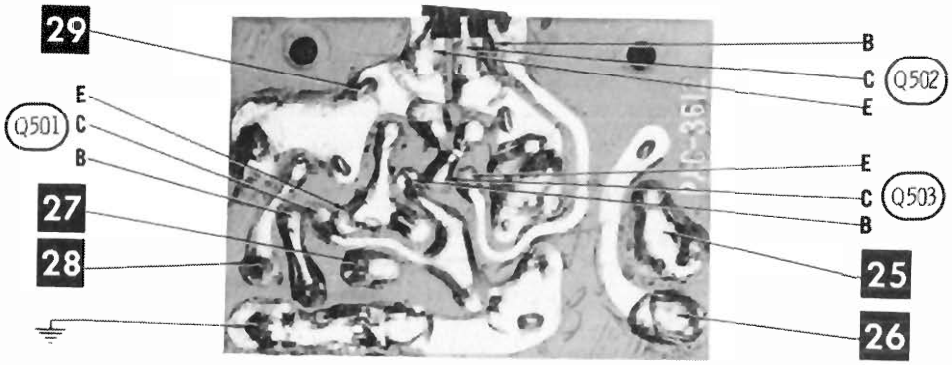

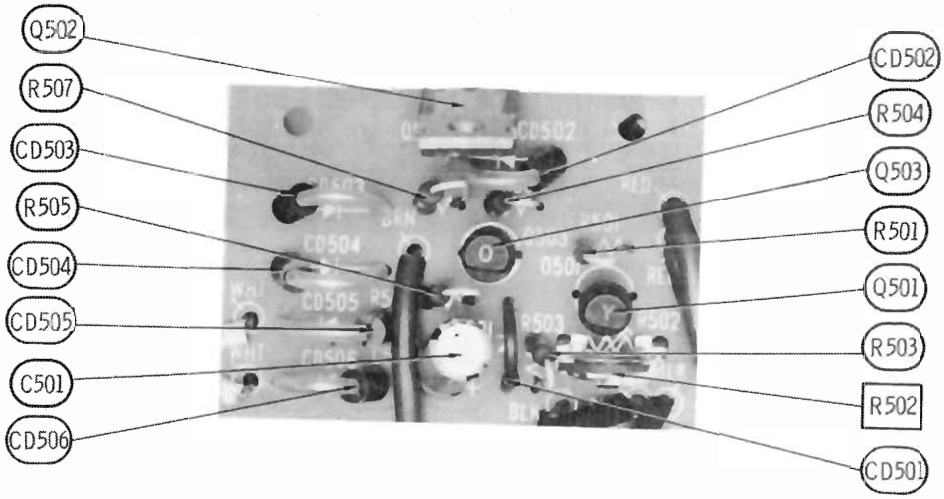

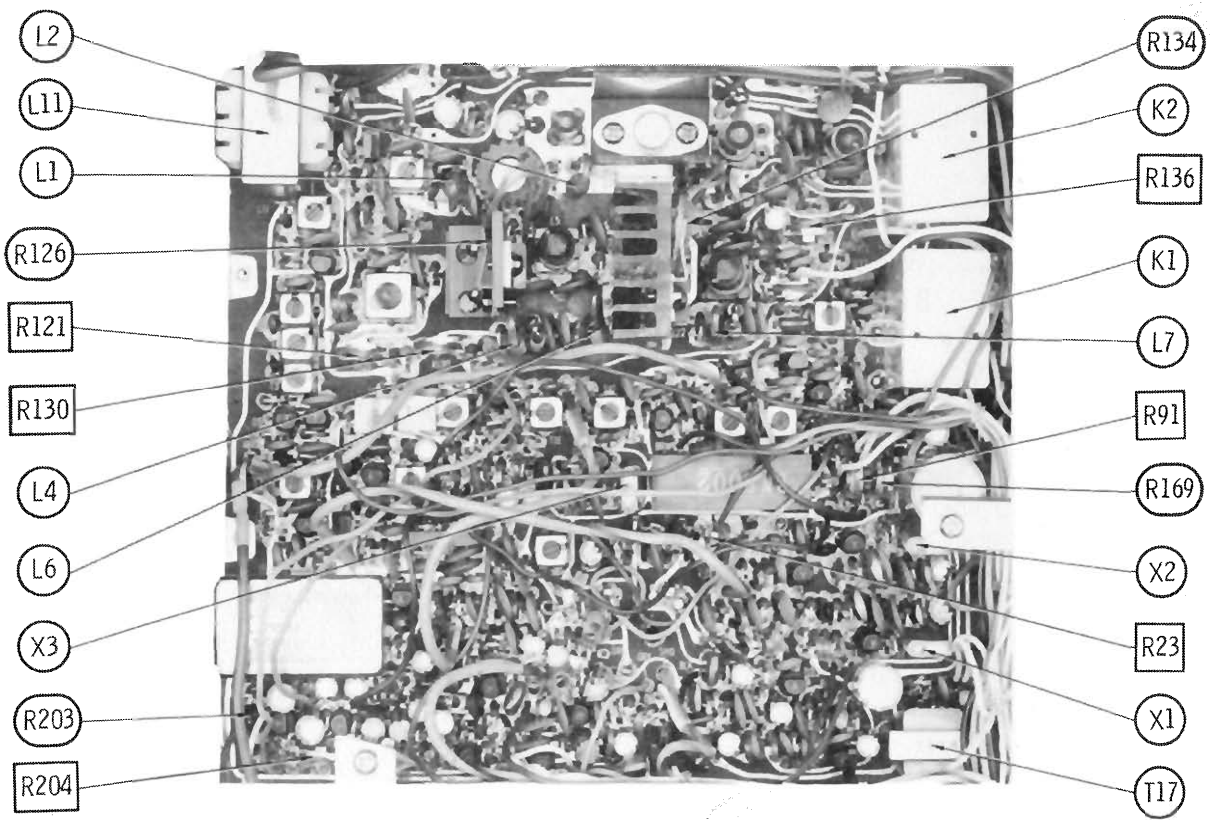
L2
L11
L1
R126
R121
R130
L4
L6
X3
R203
R204
R134
K2
R136
K1
L7
R91
R169
X2
R23
X1
T17

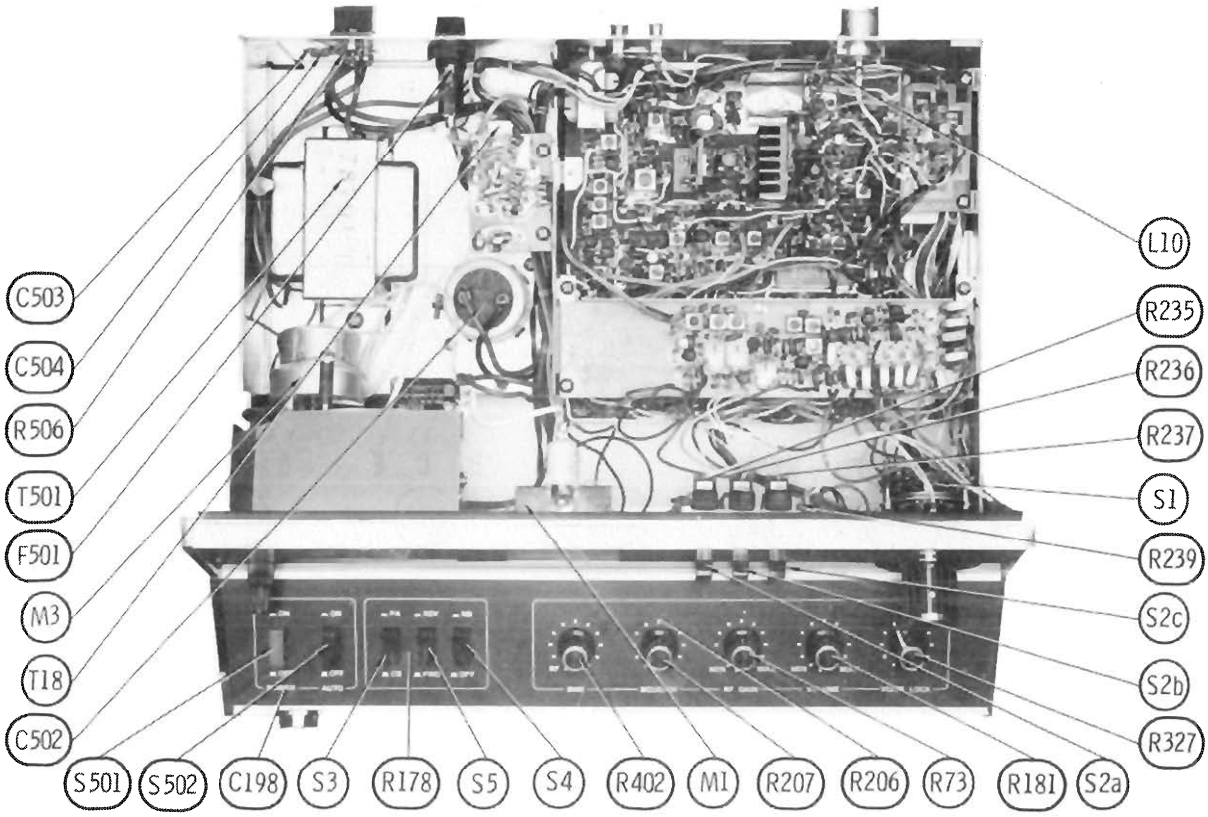
C503
C504
R506
T501
F501
M3
T18
C502
S501
S502
C198
S3
R178
S5
S4
R402
M1
R207
R206
R73
R181
S2a
L10
R235
R236
R237
S1
R239
S2c
S2b
R327

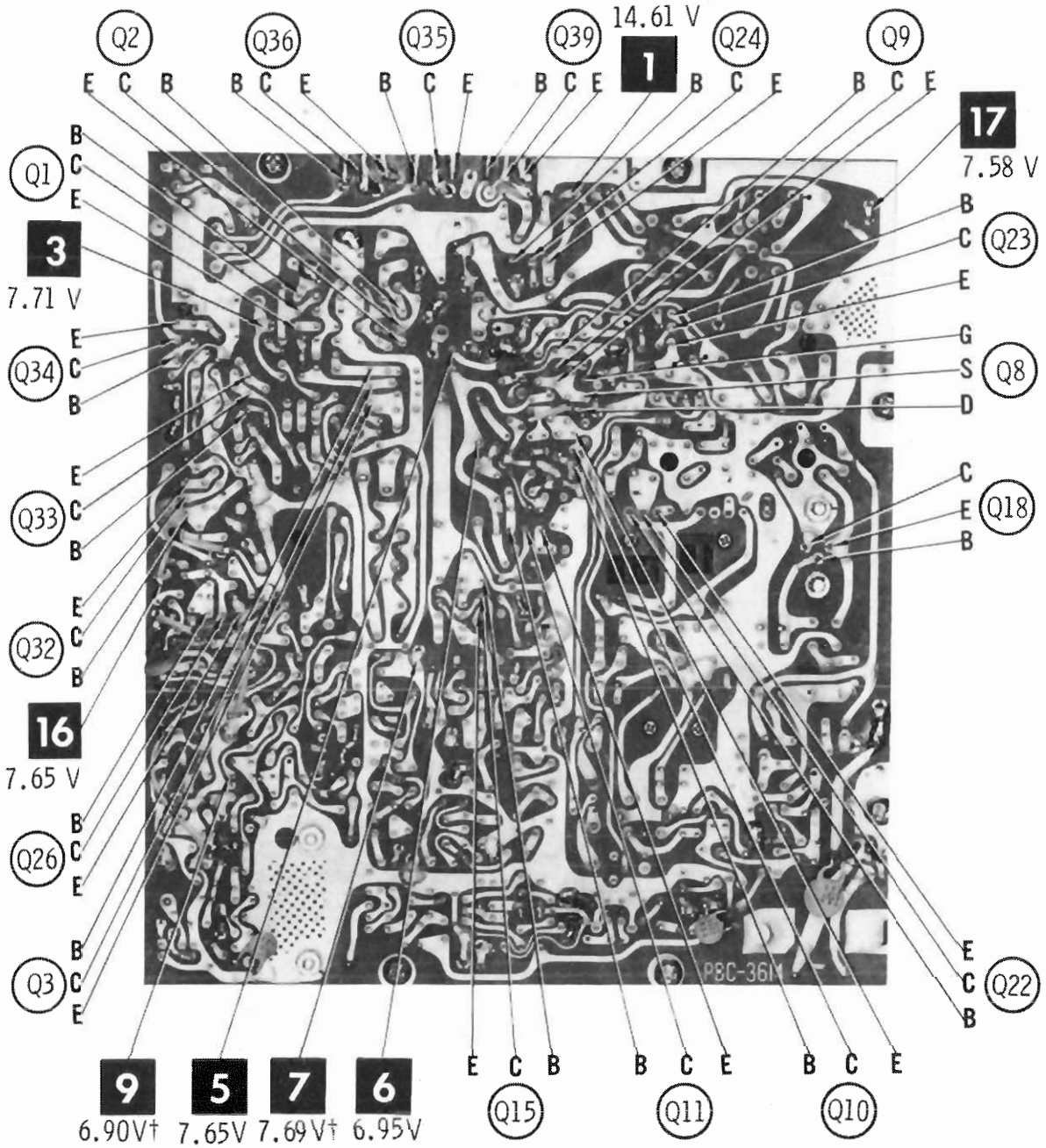

† Measured in SSB position.

A Howard W. Sams CIRCUITRACE® Photo

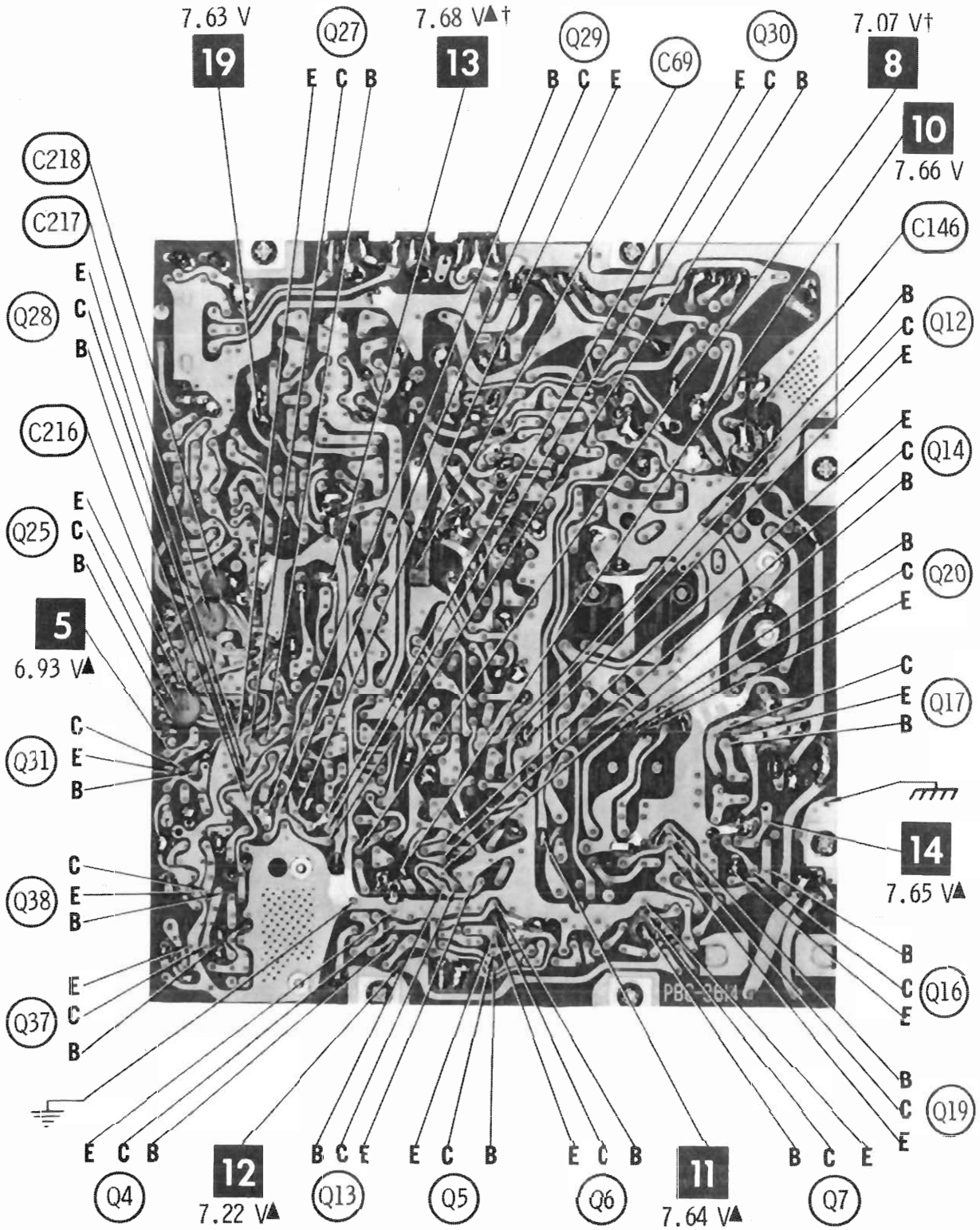

▲ Measured in transmit.
† Measured in SSB position.

A Howard W. Sams CIRCUITRACE Photo

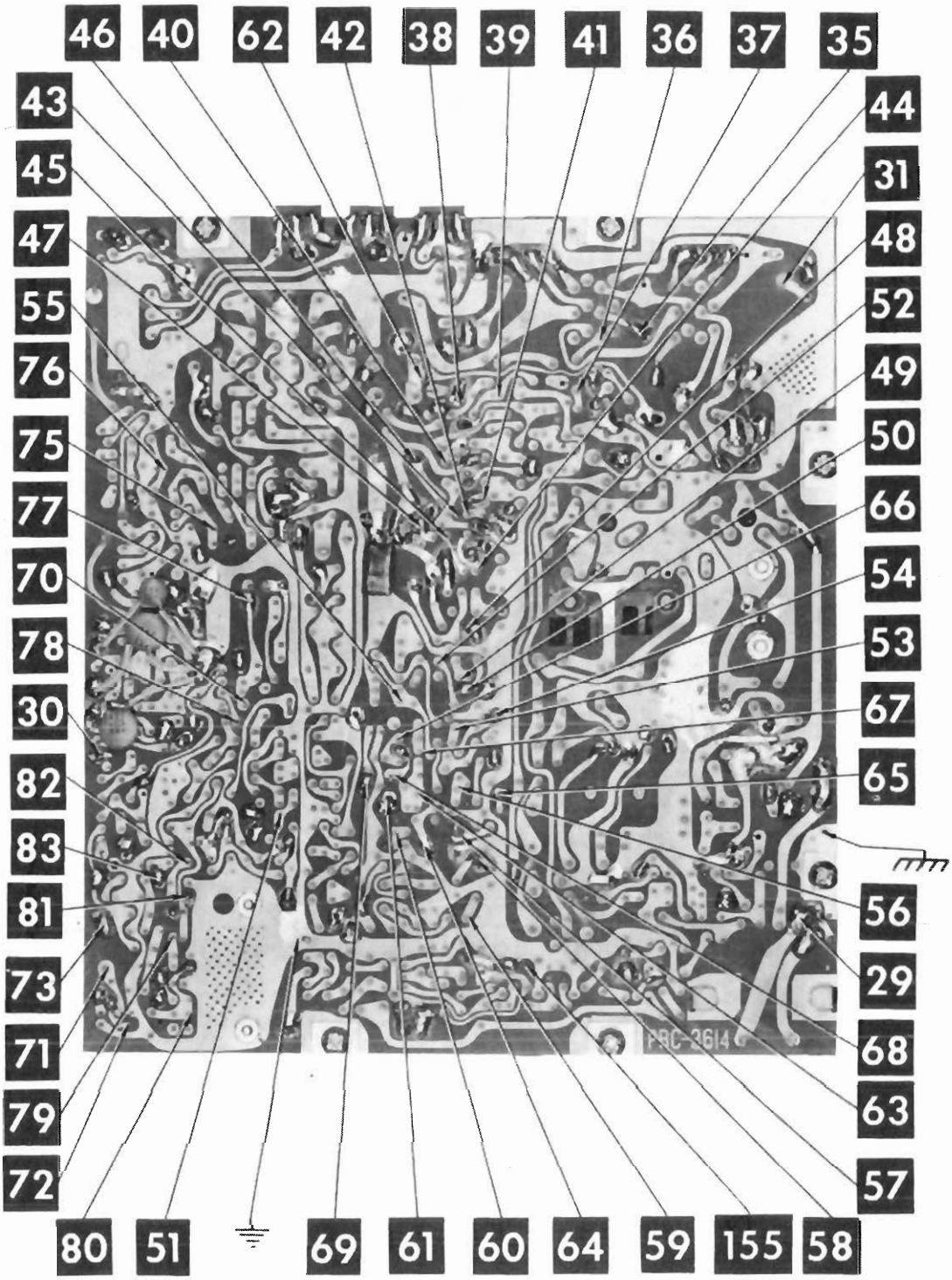

A Howard W. Sams CIRCUITRACE Photo

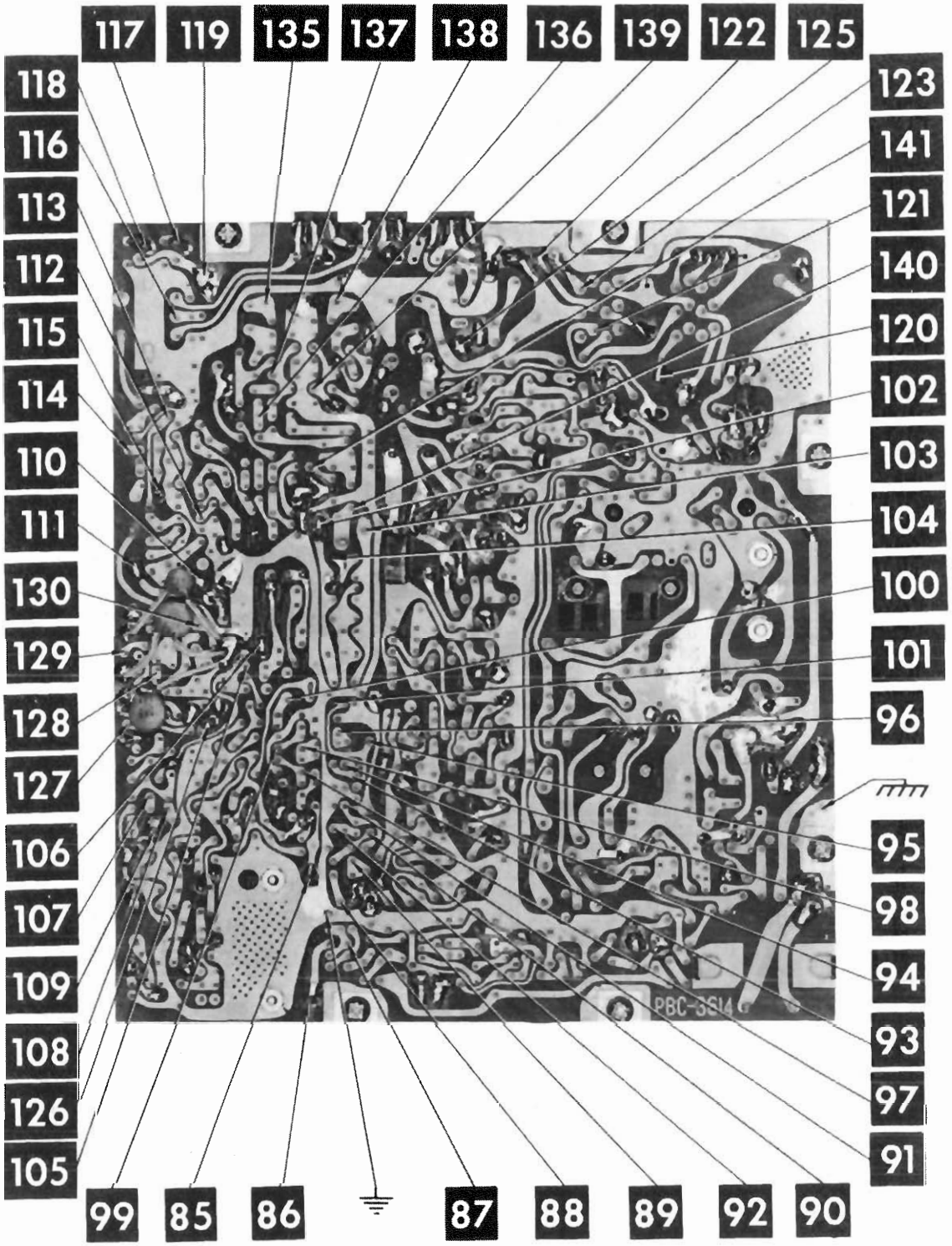

A Howard W. Sams CIRCUITRACE Photo

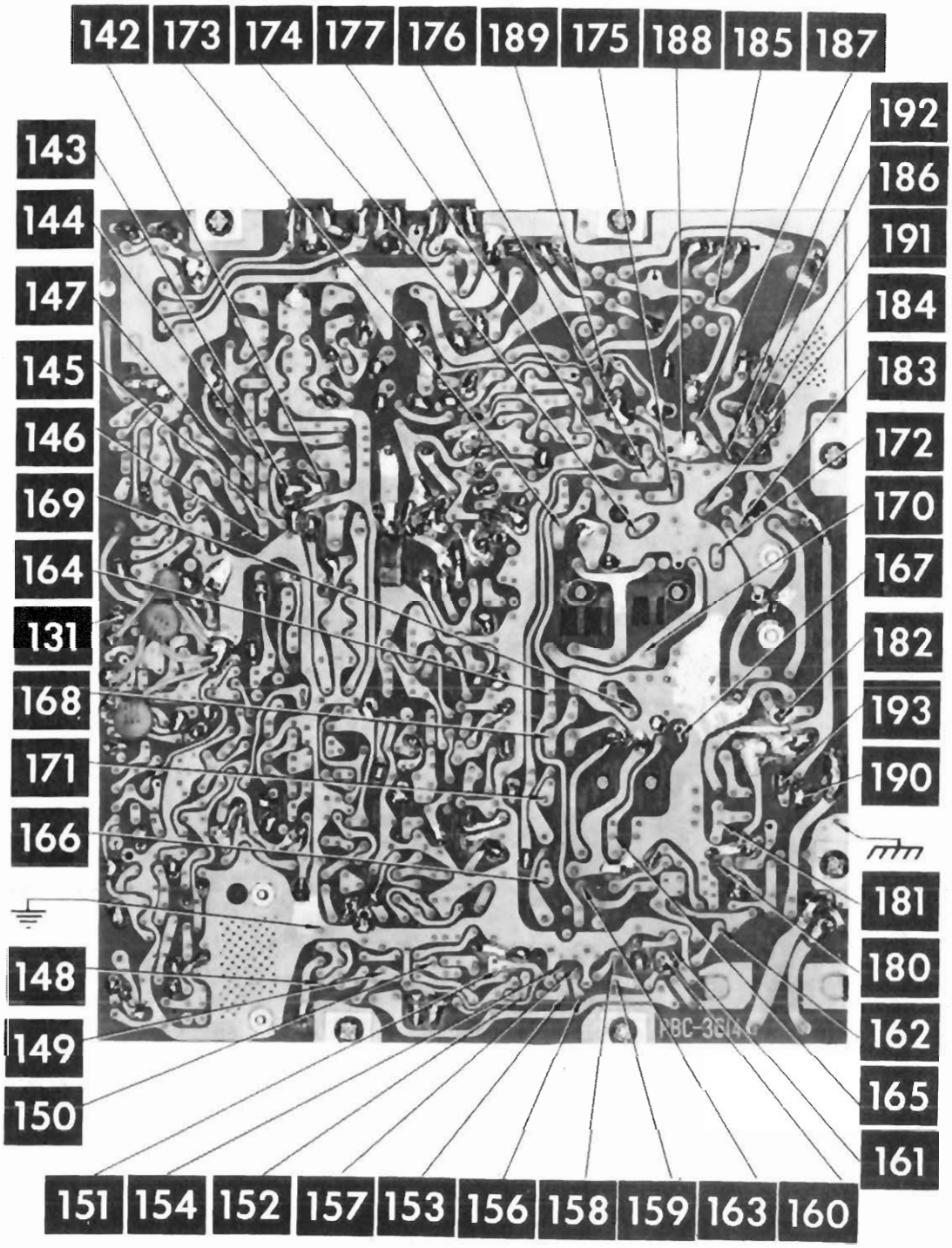

A Howard W. Sams CIRCUITRACE Photo

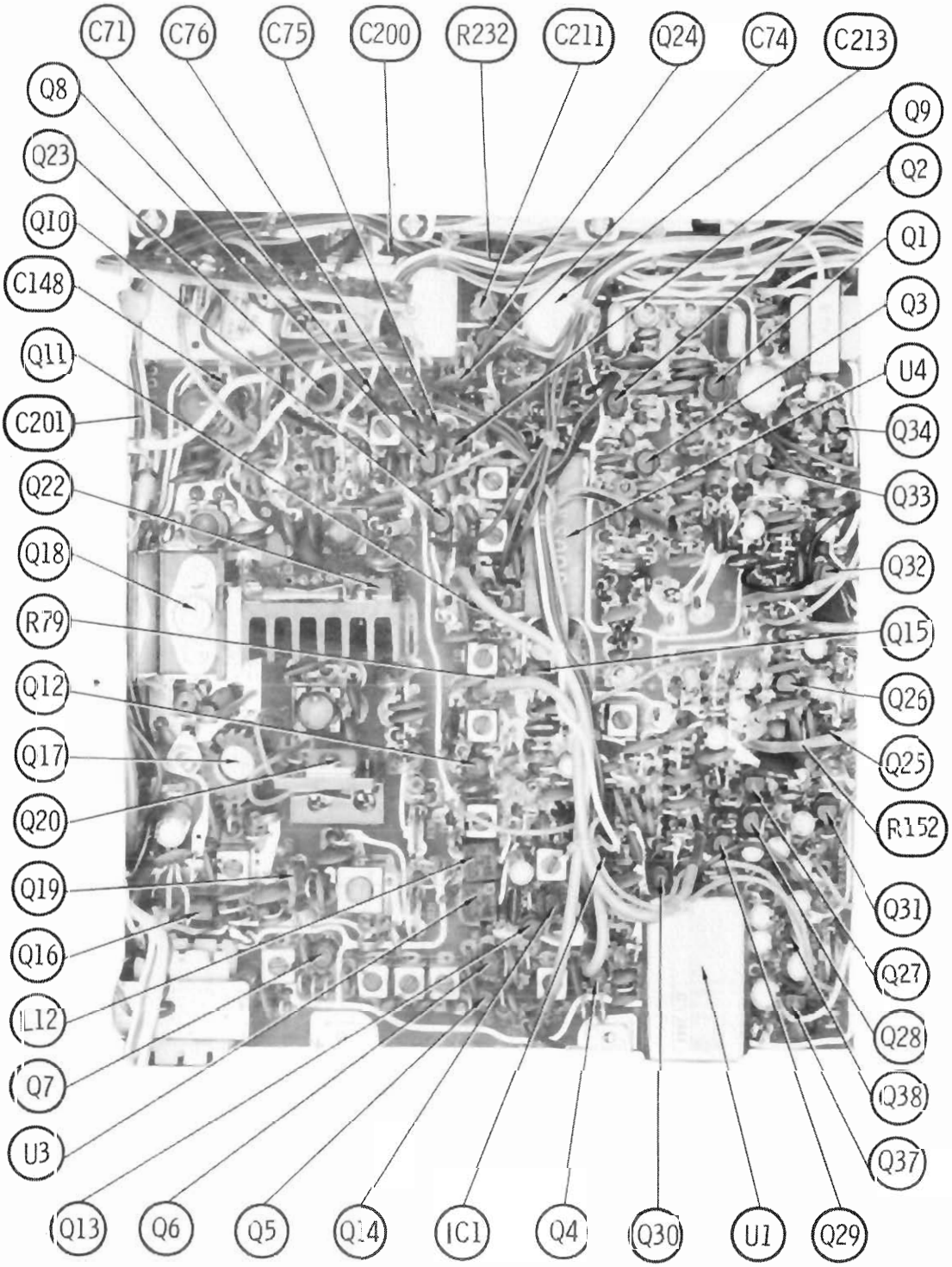
C71
C76
C75
C200
R232
C211
Q24
C74
C213
Q8
Q23
Q10
C148
Q11
C201
Q22
Q18
R79
Q12
Q17
Q20
Q19
Q16
L12
Q7
U3
Q13
Q6
Q5
Q14
IC1
Q4
Q30
U1
Q29
Q9
Q2
Q1
Q3
U4
Q34
Q33
Q32
Q15
Q26
Q25
R152
Q31
Q27
Q28
Q38
Q37

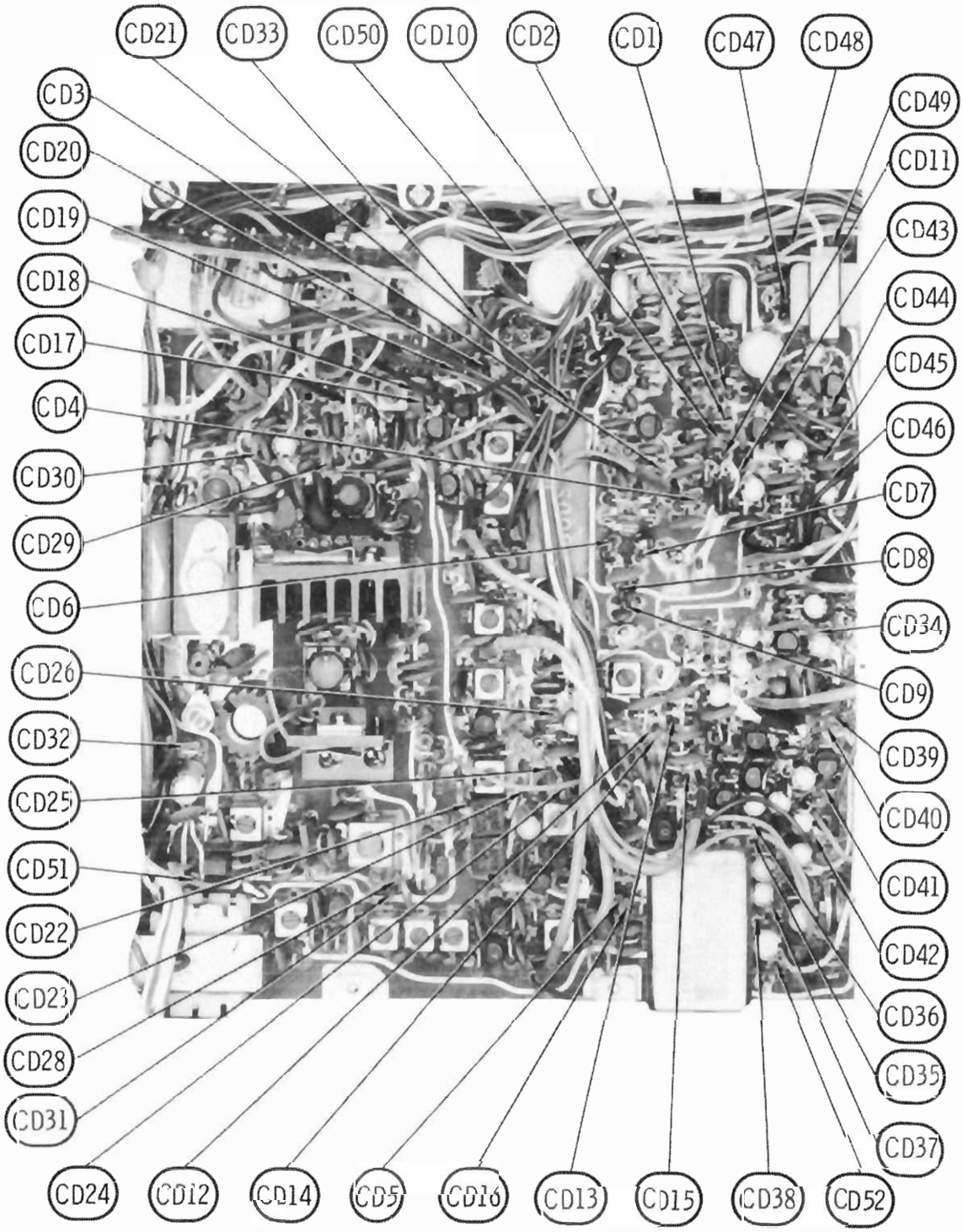
CD21
CD33
CD50
CD10
CD2
CD1
CD47
CD48
CD3
CD20
CD19
CD18
CD17
CD4
CD30
CD29
CD6
CD26
CD32
CD25
CD51
CD22
CD23
CD28
CD31
CD49
CD11
CD43
CD44
CD45
CD46
CD7
CD8
CD34
CD9
CD39
CD40
CD41
CD42
CD36
CD35
CD37
CD24
CD12
CD14
CD5
CD16
CD13
CD15
CD38
CD52

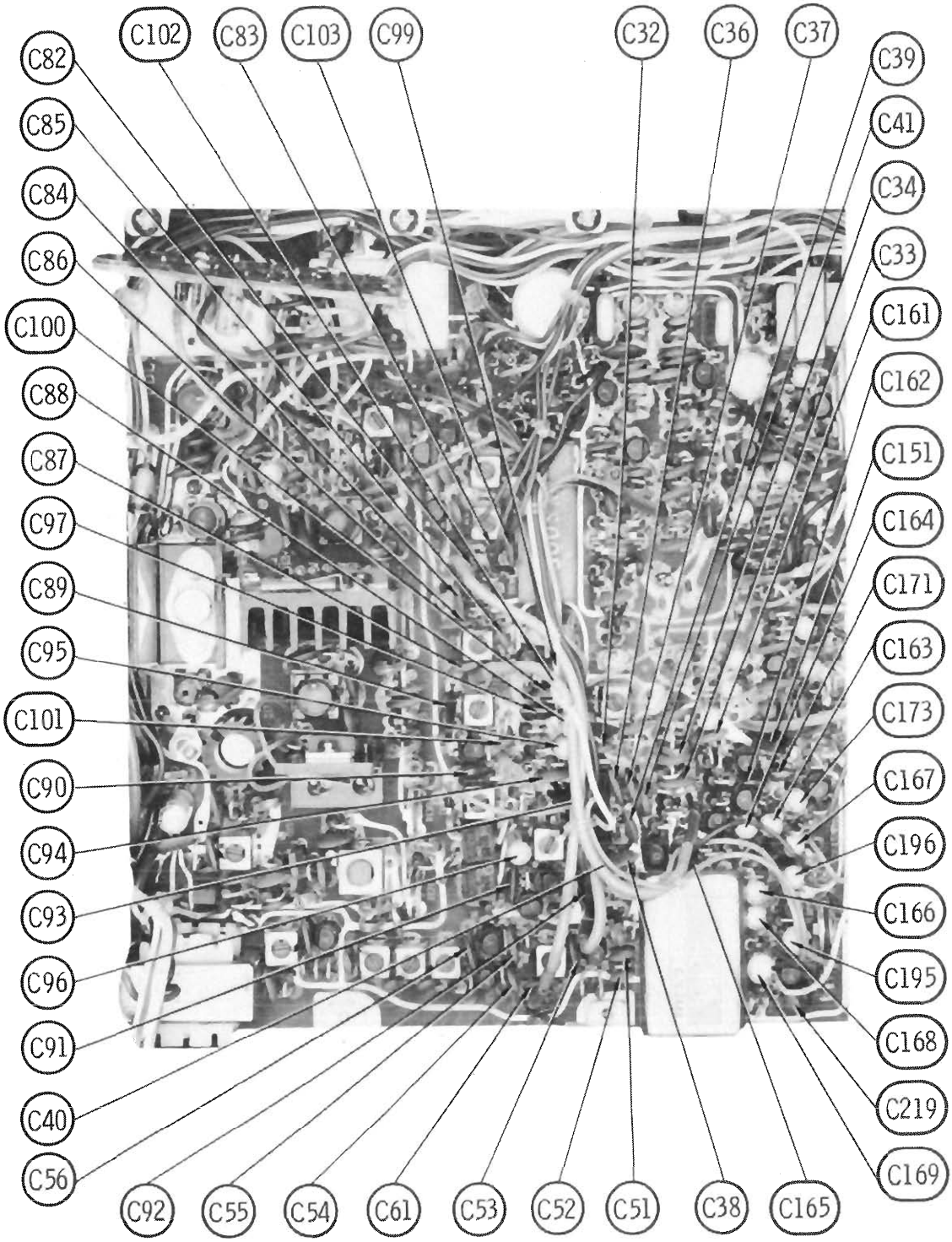
C102
C83
C103
C99
C32
C36
C37
C82
C85
C84
C86
C100
C88
C87
C97
C89
C95
C101
C90
C94
C93
C96
C91
C40
C56
C39
C41
C34
C33
C161
C162
C151
C164
C171
C163
C173
C167
C196
C166
C195
C168
C219
C169
C92
C55
C54
C61
C53
C52
C51
C38
C165

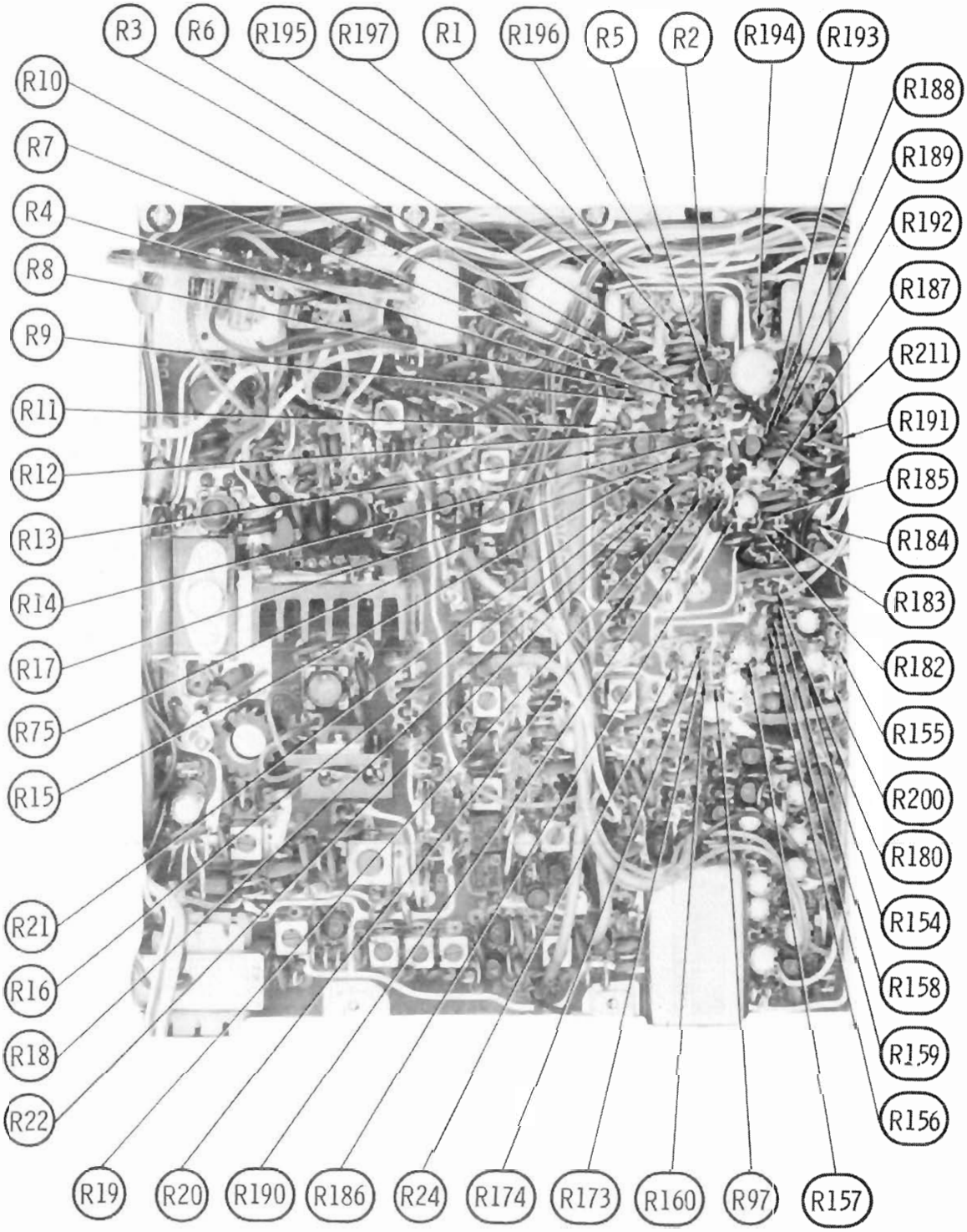
R3
R6
R195
R197
R1
R196
R5
R2
R194
R193
R10
R7
R4
R8
R9
R11
R12
R13
R14
R17
R75
R15
R21
R16
R18
R22
R188
R189
R192
R187
R211
R191
R185
R184
R183
R182
R155
R200
R180
R154
R158
R159
R156
R19
R20
R190
R186
R24
R174
R173
R160
R97
R157

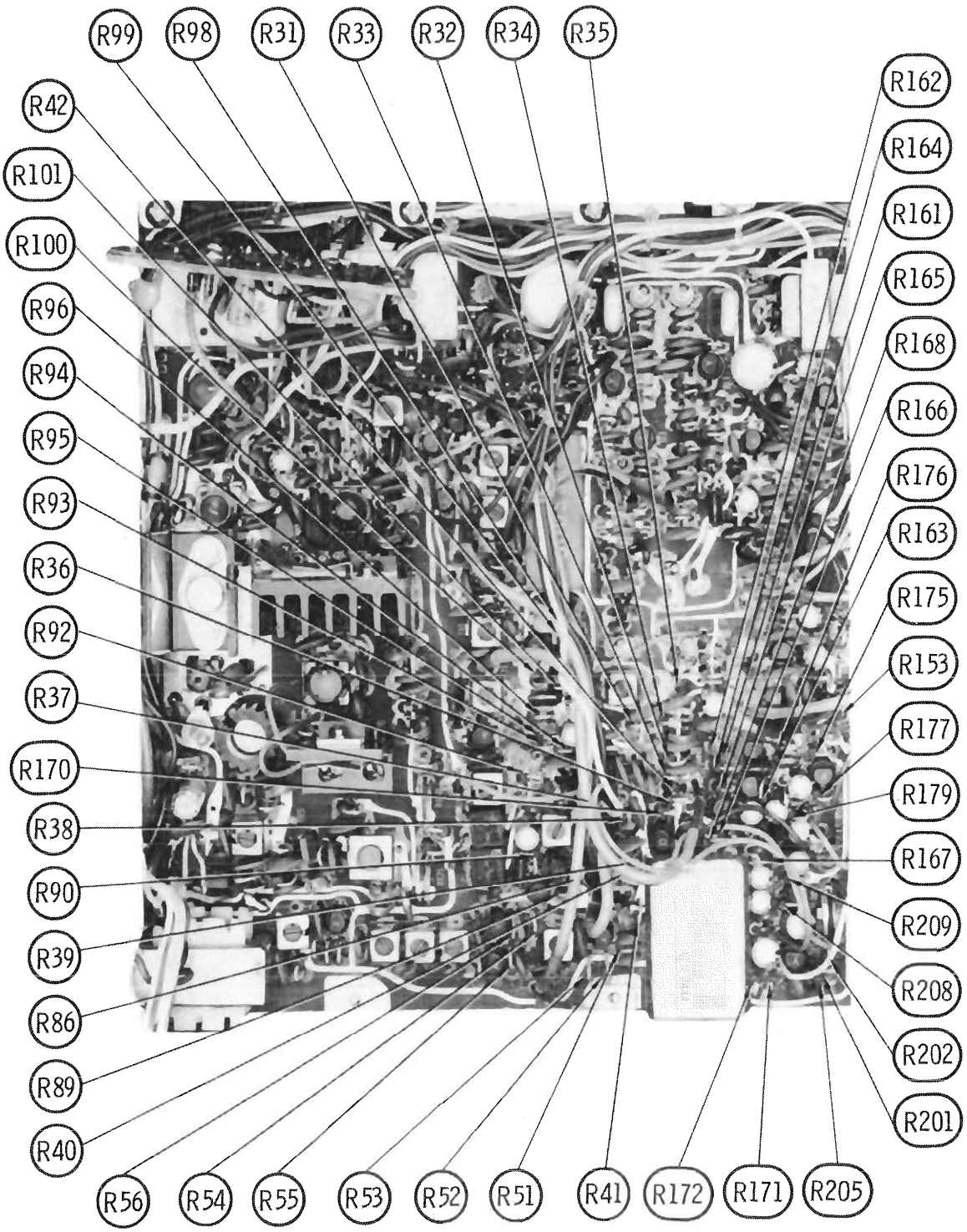
R99
R98
R31
R33
R32
R34
R35
R42
R101
R100
R96
R94
R95
R93
R36
R92
R37
R170
R38
R90
R39
R86
R89
R40
R56
R54
R55
R53
R52
R51
R41
R172
R171
R205
R162
R164
R161
R165
R168
R166
R176
R163
R175
R153
R177
R179
R167
R209
R208
R202
R201

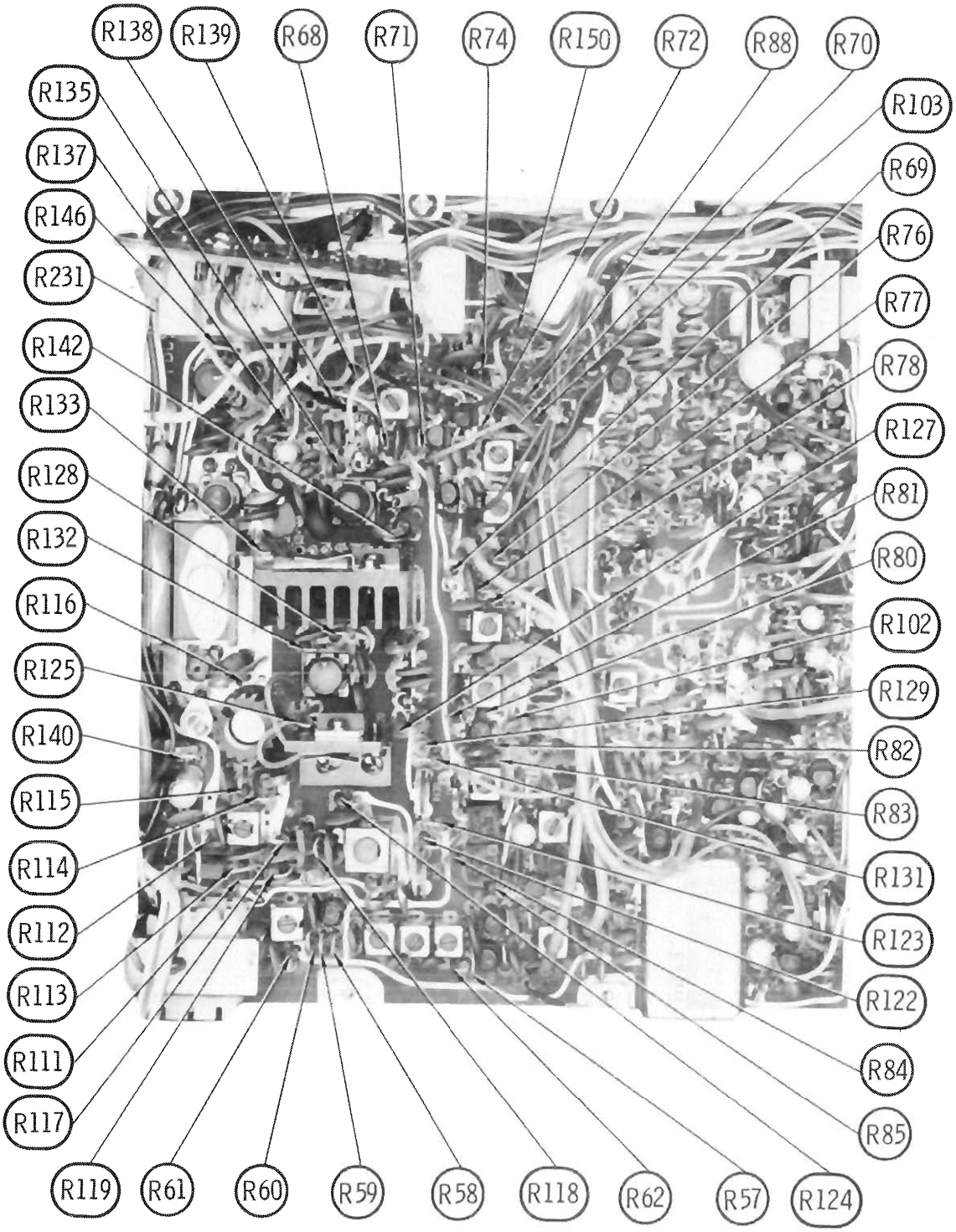
R138
R139
R68
R71
R74
R150
R72
R88
R70
R135
R103
R137
R69
R146
R76
R231
R77
R142
R78
R133
R127
R128
R81
R132
R80
R116
R102
R125
R129
R140
R82
R115
R83
R114
R131
R112
R123
R113
R122
R111
R84
R117
R85
R119
R61
R60
R59
R58
R118
R62
R57
R124

PARTS LIST AND DESCRIPTION

(When ordering parts, state Model, Part Number, and Description.)

SEMICONDUCTORS

ITEM No.	TYPE / MFGR. No. / PART No.	REPLACEMENT DATA: GENERAL ELECTRIC PART No.	INTERNATIONAL RECTIFIER PART No.	MALLORY PART No.	MOTOROLA PART No.	RCA PART No.	SPRAGUE PART No.	SYLVANIA PART No.
CD1	1S1555/151-001-9-001	GE-300	D200	PTC214	HEPR0602	SK3100	RT218	ECG 177
CD2	1S1555/151-001-9-001	GE-300	D200	PTC214	HEPR0602	SK3100	RT218	ECG 177
CD3	1S1555/151-001-9-001	GE-300	D200	PTC214	HEPR0602	SK3100	RT218	ECG 177
CD4	1S1555/151-001-9-001	GE-300	D200	PTC214	HEPR0602	SK3100	RT218	ECG 177
CD5	1S1555/151-001-9-001	GE-300	D200	PTC214	HEPR0602	SK3100	RT218	ECG 177
CD6	1N60/150-001-9-005	1N60	1N60	PTC206	HEP135	SK3088		ECG 109
CD7	1N60/150-001-9-005	1N60	1N60	PTC206	HEP135	SK3088		ECG 109
CD8	1N60/150-001-9-005	1N60	1N60	PTC206	HEP135	SK3088		ECG 109
CD9	1N60/150-001-9-005	1N60	1N60	PTC206	HEP135	SK3088		ECG 109
CD10	1S1555/151-001-9-001	GE-300	D200	PTC214	HEPR0602	SK3100	RT218	ECG 177
CD11	1S1555/151-001-9-001	GE-300	D200	PTC214	HEPR0602	SK3100	RT218	ECG 177
CD12	1S1555/151-001-9-001	GE-300	D200	PTC214	HEPR0602	SK3100	RT218	ECG 177
CD13	1S1555/151-001-9-001	GE-300	D200	PTC214	HEPR0602	SK3100	RT218	ECG 177
CD14	1S1555/151-001-9-001	GE-300	D200	PTC214	HEPR0602	SK3100	RT218	ECG 177
CD15	1S1555/151-001-9-001	GE-300	D200	PTC214	HEPR0602	SK3100	RT218	ECG 177
CD16	1S1555/151-001-9-001	GE-300	D200	PTC214	HEPR0602	SK3100	RT218	ECG 177
CD17	1S1555/151-001-9-001	GE-300	D200	PTC214	HEPR0602	SK3100	RT218	ECG 177
CD18	1S1555/151-001-9-001	GE-300	D200	PTC214	HEPR0602	SK3100	RT218	ECG 177
CD19	M8513A/151-034-9-001	GE-300	D200	PTC214	HEPR0602	SK3100	RT218	ECG 177
CD20	M8513A/151-034-9-001	GE-300	D200	PTC214	HEPR0602	SK3100	RT218	ECG 177
CD21	1S1555/151-001-9-001	GE-300	D200	PTC214	HEPR0602	SK3100	RT218	ECG 177
CD22	1S1555/151-001-9-001	GE-300	D200	PTC214	HEPR0602	SK3100	RT218	ECG 177
CD23	1N60/150-001-9-005	1N60	1N60	PTC206	HEP135	SK3088		ECG 109
CD24	1N60/150-001-9-005	1N60	1N60	PTC206	HEP135	SK3088		ECG 109
CD25	1S1555/151-001-9-001	GE-300	D200	PTC214	HEPR0602	SK3100	RT218	ECG 177
CD26	1S1555/151-001-9-001	GE-300	D200	PTC214	HEPR0602	SK3100	RT218	ECG 177
CD28	1S1555/151-001-9-001	GE-300	D200	PTC214	HEPR0602	SK3100	RT218	ECG 177
CD29	1S1555/151-001-9-001	GE-300	D200	PTC214	HEPR0602	SK3100	RT218	ECG 177
CD30	1S1555/151-001-9-001	GE-300	D200	PTC214	HEPR0602	SK3100	RT218	ECG 177
CD31	1S1555/151-001-9-001	GE-300	D200	PTC214	HEPR0602	SK3100	RT218	ECG 177
CD32	1S1555/151-001-9-001	GE-300	D200	PTC214	HEPR0602	SK3100	RT218	ECG 177
CD33	1S1885/151-030-9-005	GE-504A	8D4 or 5A4D	PTC201 or PTC202	HEPR0052	SK3030 or SK3031	RT213 or RT214	ECG 116 or ECG 117
CD34	1S1555/151-030-9-001	GE-300	D200	PTC214	HEPR0602	SK3100	RT218	ECG 177
CD35	1N60/150-001-9-005	1N60	1N60	PTC206	HEP135	SK3088		ECG 109
CD36	1N60/150-001-9-005	1N60	1N60	PTC206	HEP135	SK3088		ECG 109
CD37	1S1555/151-030-9-001	GE-300	D200	PTC214	HEPR0602	SK3100	RT218	ECG 177
CD38	1N60/150-001-9-005	1N60	1N60	PTC206	HEP135	SK3088		ECG 109
CD39	1S1555/151-030-9-001	GE-300	D200	PTC214	HEPR0602	SK3100	RT218	ECG 177
CD40	1S1555/151-030-9-001	GE-300	D200	PTC214	HEPR0602	SK3100	RT218	ECG 177
CD41	1S1555/151-030-9-001	GE-300	D200	PTC214	HEPR0602	SK3100	RT218	ECG 177
CD42	1S1555/151-030-9-001	GE-300	D200	PTC214	HEPR0602	SK3100	RT218	ECG 177
CD43	1S1555/151-030-9-001	GE-300	D200	PTC214	HEPR0602	SK3100	RT218	ECG 177
CD44	1S1555/151-030-9-001	GE-300	D200	PTC214	HEPR0602	SK3100	RT218	ECG 177
CD45	1S1555/151-030-9-001	GE-300	D200	PTC214	HEPR0602	SK3100	RT218	ECG 177
CD46	1S1555/151-030-9-001	GE-300	D200	PTC214	HEPR0602	SK3100	RT218	ECG 177
CD47	M8513A/151-034-9-001	GE-300	D200	PTC214	HEPR0602	SK3100	RT218	ECG 177
CD48	1S1885/151-030-9-005	GE-504A	8D4 or 5A4D	PTC201 or PTC202	HEPR0052	SK3030 or SK3031	RT213 or RT214	ECG 116 or ECG 117
CD49	1S1885/151-030-9-005							
CD49	1S1885/151-030-9-005	GE-504A	8D4 or 5A4D	PTC201 or PTC202	HEPR0052	SK3030 or SK3031	RT213 or RT214	ECG 116 or ECG 117
CD50	DZ8.2A/ 152-042-9-001 (8.2 V Zener)	GE-X11	Z-1208	ZB8.2	HEPZ0411	SK3059	RT239	ECG 5072
CD51	1S1885/151-030-9-005	GE-504A	8D4 or 5A4D	PTC201 or PTC202	HEPR0052	SK3030 or SK3031	RT213 or RT214	ECG 116 or ECG 117
CD52	1N60/150-001-9-005	1N60	1N60	PTC206	HEP135	SK3088		ECG 109
CD308	DZ6.8A/ 152-042-9-002 (6.8 V Zener)	GEZD-6.2	Z-1206	ZB6.8	HEPZ0409	SK3058	RT238	ECG 5071
CD401	1S1555/151-030-9-001	GE-300	D200	PTC214	HEPR0602	SK3100	RT218	ECG 177
CD402	1S1555/151-030-9-001	GE-300	D200	PTC214	HEPR0602	SK3100	RT218	ECG 177
CD501	DZ6.8A/ 152-042-9-002 (6.8 V Zener)	GEZD-6.2	Z-1206	ZB6.8	HEPZ0409	SK3058	RT238	ECG 5071
CD502	1S1885/151-030-9-005	GE-504A	8D4 or 5A4D	PTC201 or PTC202	HEPR0052	SK3030 or SK3031	RT213 or RT214	ECG 116 or ECG 117
CD503	1S1885/151-030-9-005	GE-504A	8D4 or 5A4D	PTC201 or PTC202	HEPR0052	SK3030 or SK3031	RT213 or RT214	ECG 116 or ECG 117
CD504	1S1885/151-030-9-005	GE-504A	8D4 or 5A4D	PTC201 or PTC202	HEPR0052	SK3030 or SK3031	RT213 or RT214	ECG 116 or ECG 117
CD505	1S1885/151-030-9-005	GE-504A	8D4 or 5A4D	PTC201 or PTC202	HEPR0052	SK3030 or SK3031	RT213 or RT214	ECG 116 or ECG 117
CD506	1S1885/151-030-9-005	GE-504A	8D4 or 5A4D	PTC201 or PTC202	HEPR0052	SK3030 or SK3031	RT213 or RT214	ECG 116 or ECG 117
USED IN LATE SYNTHESIZER VERSIONS								
CD301	1S1658/151-030-9-004	GE-90 (8)	D201 (8)		HEPR2503(8)	SK3126 (8)		
CD302	6.2 V Zener (6.2 V Zener)	GEZD-6.2	Z-1204	PTC503	HEPZ0408	SK3058	RT237	ECG 137
CD303	1S1555/151-030-9-001	GE-300	D200	PTC214	HEPR0602	SK3100	RT218	ECG 177
CD304	1S1555/151-030-9-001	GE-300	D200	PTC214	HEPR0602	SK3100	RT218	ECG 177
CD305	1S1555/151-030-9-001	GE-300	D200	PTC214	HEPR0602	SK3100	RT218	ECG 177
USED IN EARLY SYNTHESIZER VERSIONS								
CD301	1S1555/151-030-9-001	GE-300	D200	PTC214	HEPR0602	SK3100	RT218	ECG 177
CD302	1S1555/151-030-9-001	GE-300	D200	PTC214	HEPR0602	SK3100	RT218	ECG 177
CD303	1S1555/151-030-9-001	GE-300	D200	PTC214	HEPR0602	SK3100	RT218	ECG 177
CD304	1S1555/151-030-9-001	GE-300	D200	PTC214	HEPR0602	SK3100	RT218	ECG 177
CD305	1S1555/151-030-9-001	GE-300	D200	PTC214	HEPR0602	SK3100	RT218	ECG 177
CD306	1S1555/151-030-9-001	GE-300	D200	PTC214	HEPR0602	SK3100	RT218	ECG 177
CD307	1S1658/151-030-9-004	GE-90 (8)	D201 (8)		HEPR2503(8)	SK3126 (8)		
CD308	DZ6.8A/ 152-042-9-002 (6.8 V Zener)	GEZD-6.2	Z-1206	ZB6.8	HEPZ0409			ECG 5071
CD309	1S1555/151-030-9-001	GE-300	D200	PTC214	HEPR0602	SK3100	RT218	ECG 177
CD310	1S1555/151-030-9-001	GE-300	D200	PTC214	HEPR0602	SK3100	RT218	ECG 177
IC1	TA7061AP/ 307-029-1-001							
Q1	2SC372Y/ 176-029-9-001	GE-20	TR-24	PTC115	HEP54	SK3018	RT107	ECG 108

(CONTINUED ON PAGE 42)

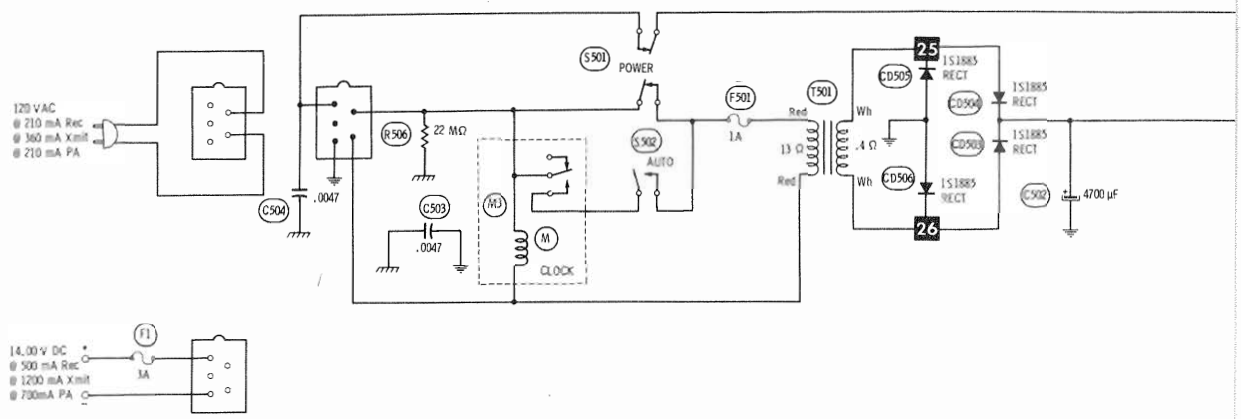

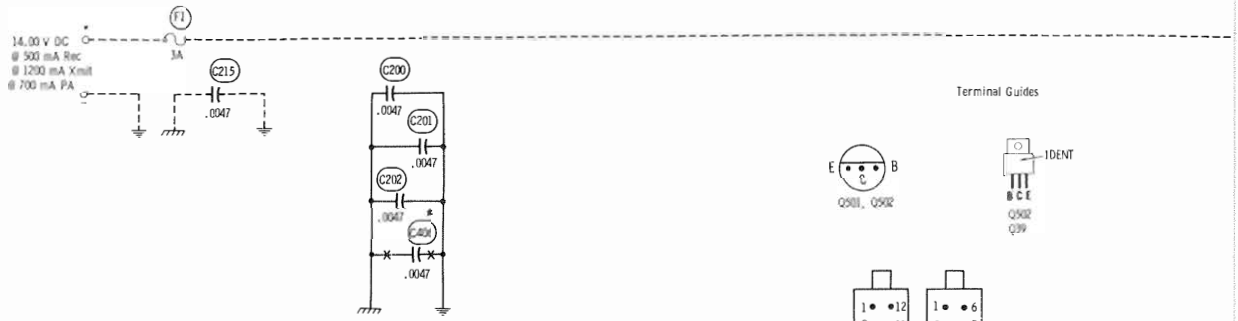

■ NOISE BLANKER ON

† SSB

Denotes chassis.
Denotes ground. (Voltage reference unless otherwise indicated)
- - - Indicates connection used in some versions.
—✱— Indicates connection not used in some versions.
✱ Omitted in some versions.
⊙ See parts list.
Value varies; replace with original value.
▲ Measured in transmit position.
● Measured with unit squelched.
NC No Connection.
Measurements taken with switching in position shown unless otherwise indicated.
Values shown in ( ) are used in some applications.
Resistors are 1/2W or less, 10% or 20%, unless otherwise indicated.
Supply voltage maintained at rated value for measurements.
Voltage and resistance measured with VTVM or equivalent meter, no signal applied and controls adjusted for normal operation.
Arrow on control indicates direction of advance.
Numbers assigned to terminals may not be found on the unit.
Transistor resistances vary widely; no resistance measurements taken.

A PHOTOFACT STANDARD NOTATION SCHEMATIC
with CIRCUITRACE®

© Howard W. Sams & Co., Inc. 1974

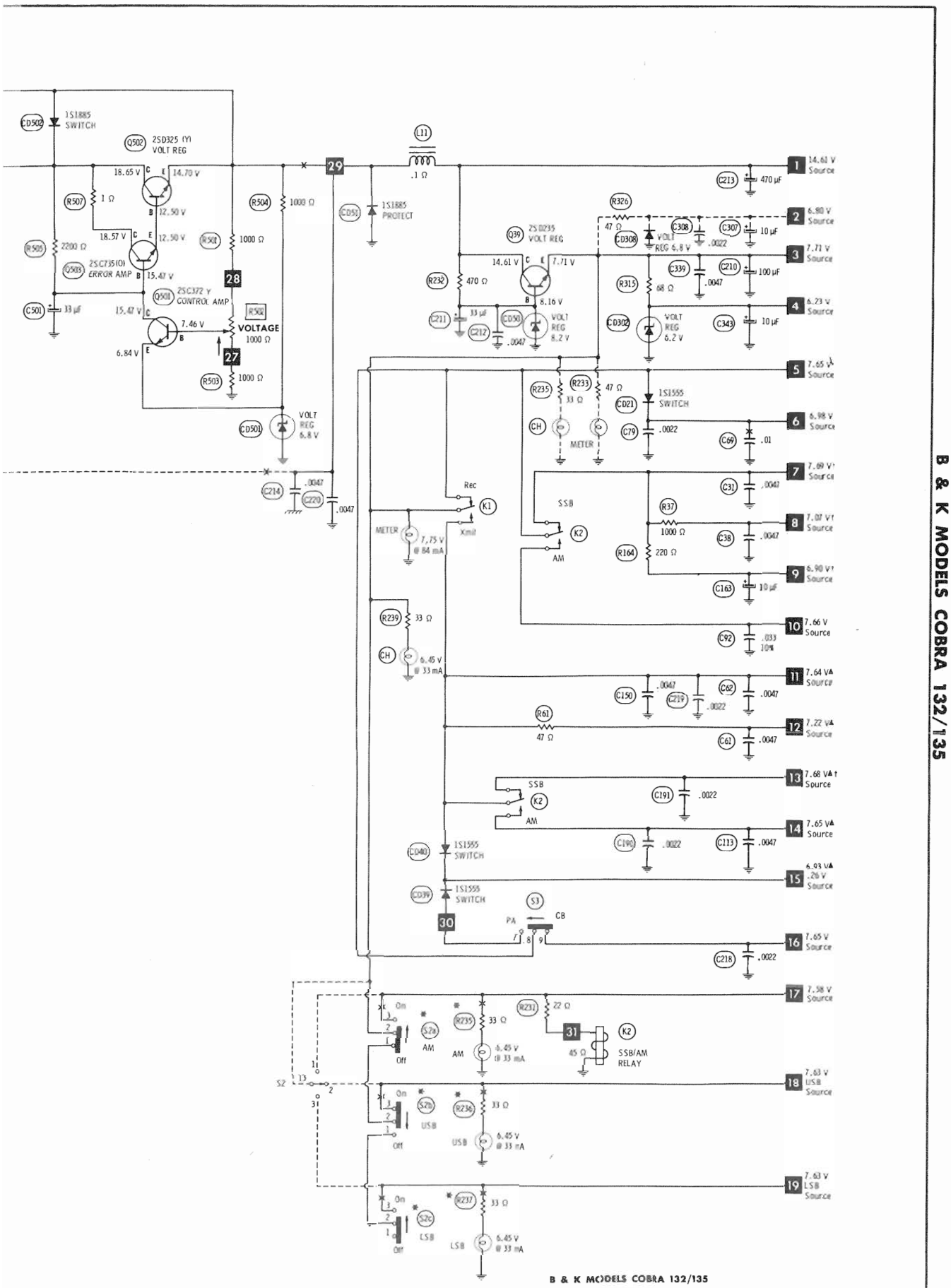

B & K MODELS COBRA 132/135

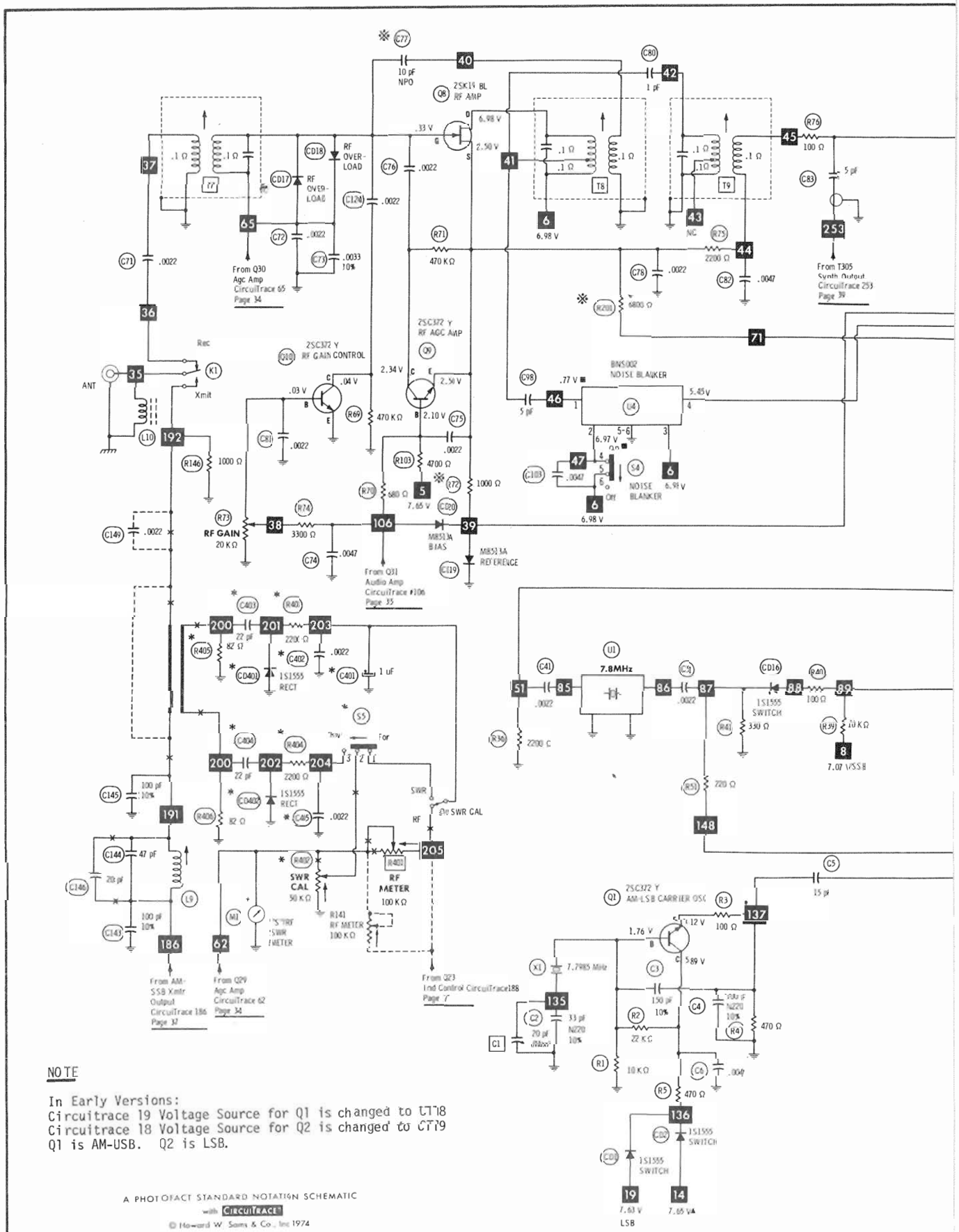

NOTE

In Early Versions:
Circuitrace 19 Voltage Source for Q1 is changed to CT18
Circuitrace 18 Voltage Source for Q2 is changed to CT19
Q1 is AM-USB. Q2 is LSB.

A PHOTOFACT STANDARD NOTATION SCHEMATIC
with CIRCUITRACE
© Howard W. Sams & Co., Inc 1974

SEE NOTES ON PAGE 30

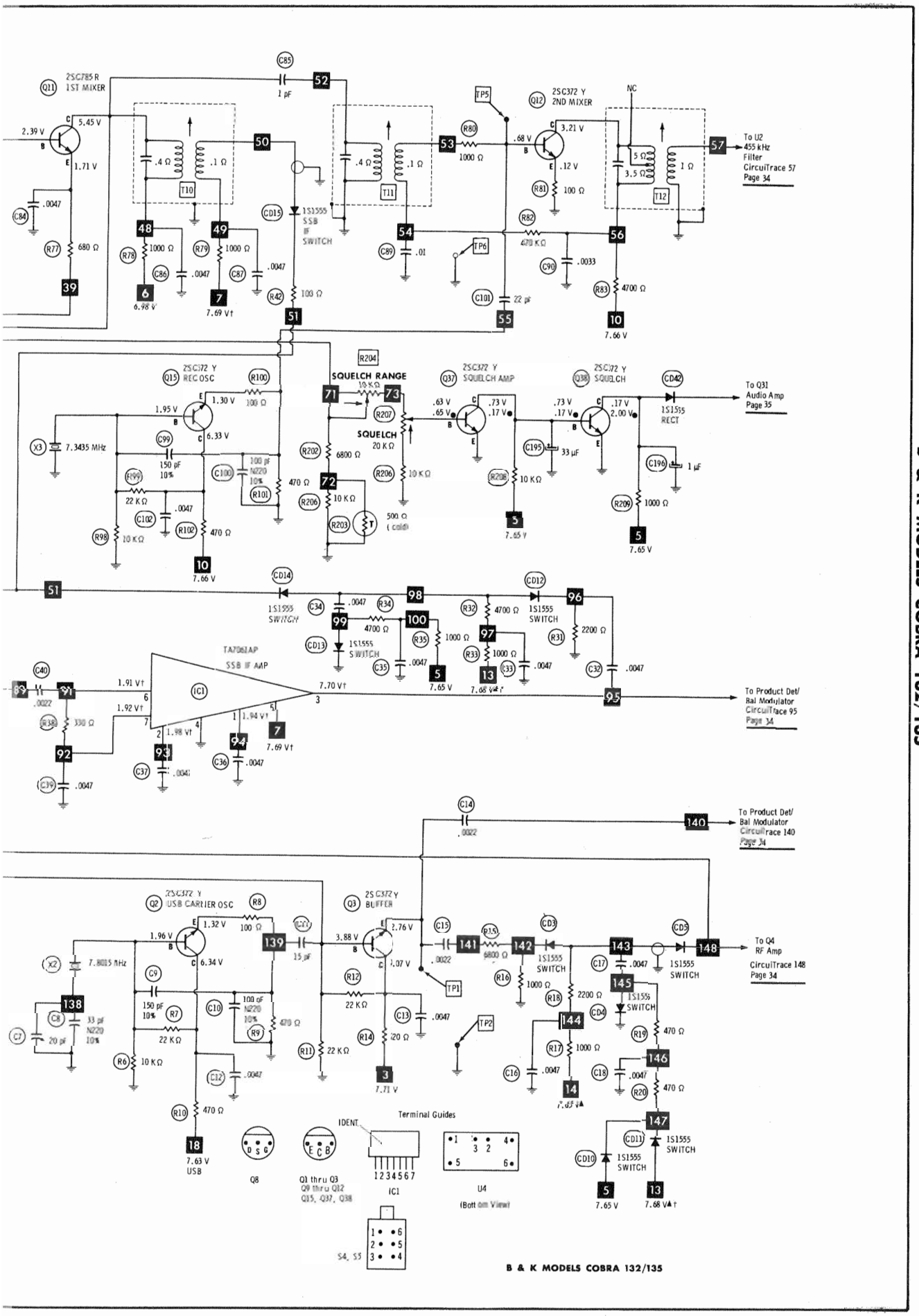

B & K MODELS COBRA 132/135

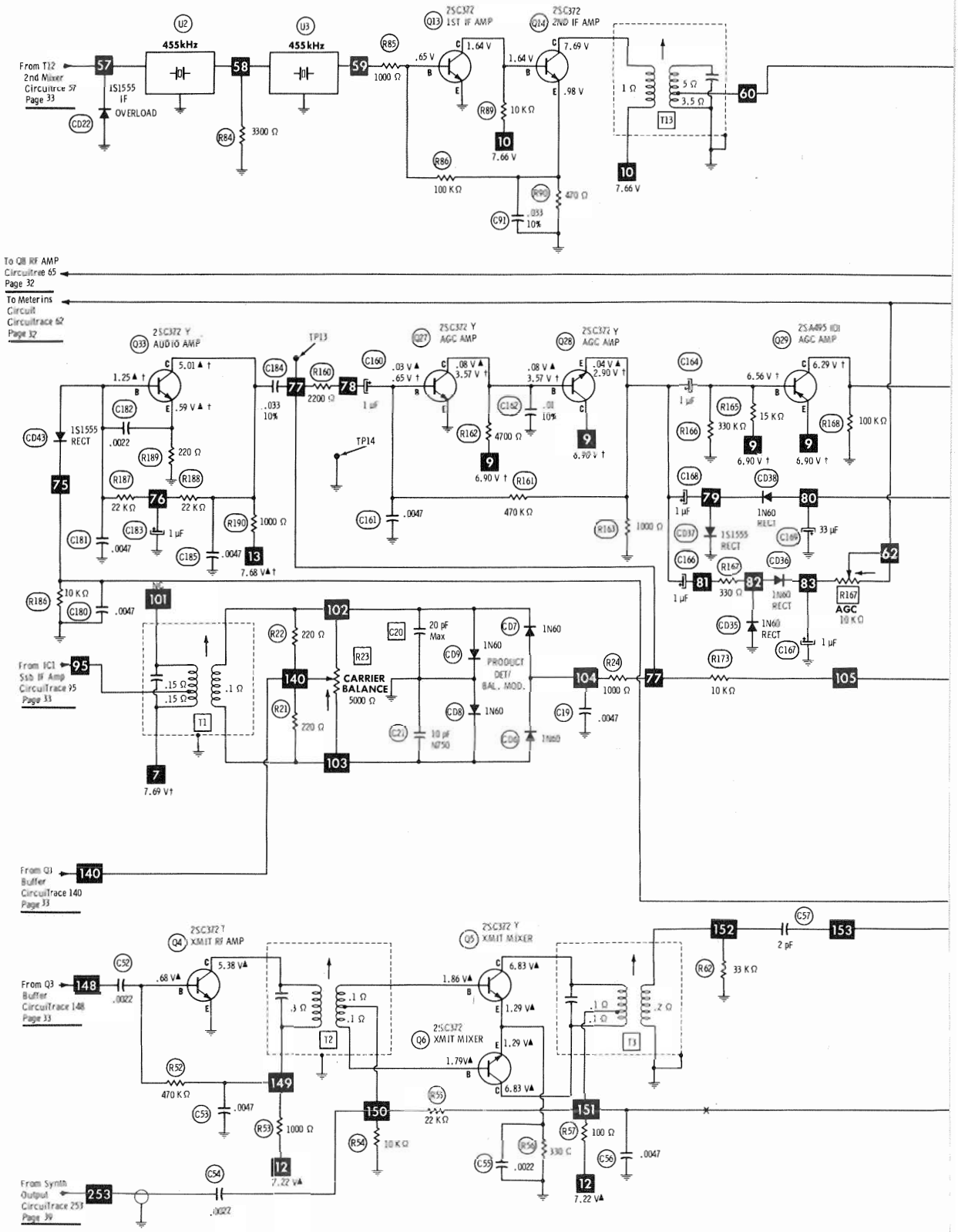

SEE NOTES ON PAGE 30

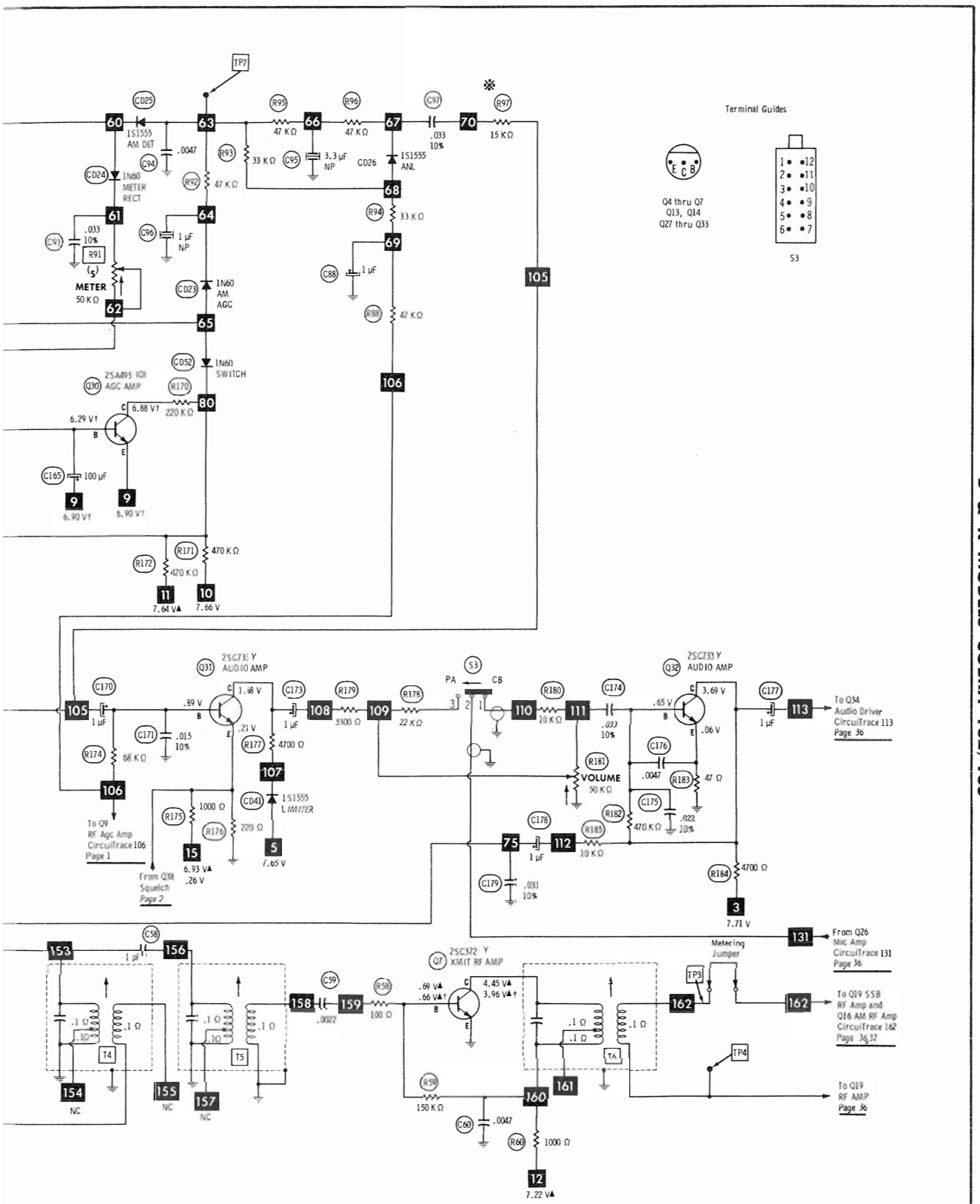

B & K MODELS COBRA 132/135

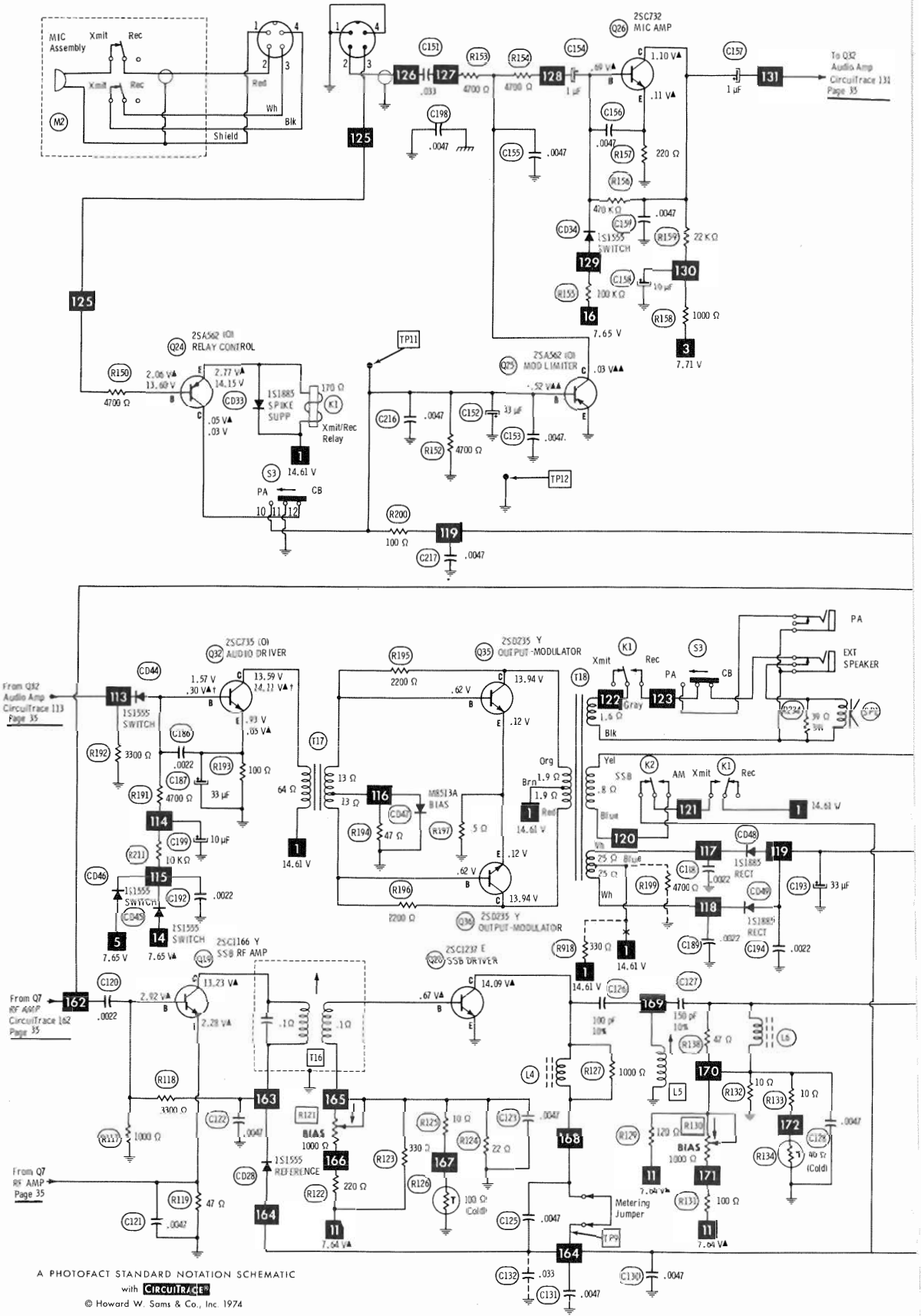

A PHOTOFACT STANDARD NOTATION SCHEMATIC
with CIRCUITRACE®

© Howard W. Sams & Co., Inc. 1974

SEE NOTES ON PAGE 30

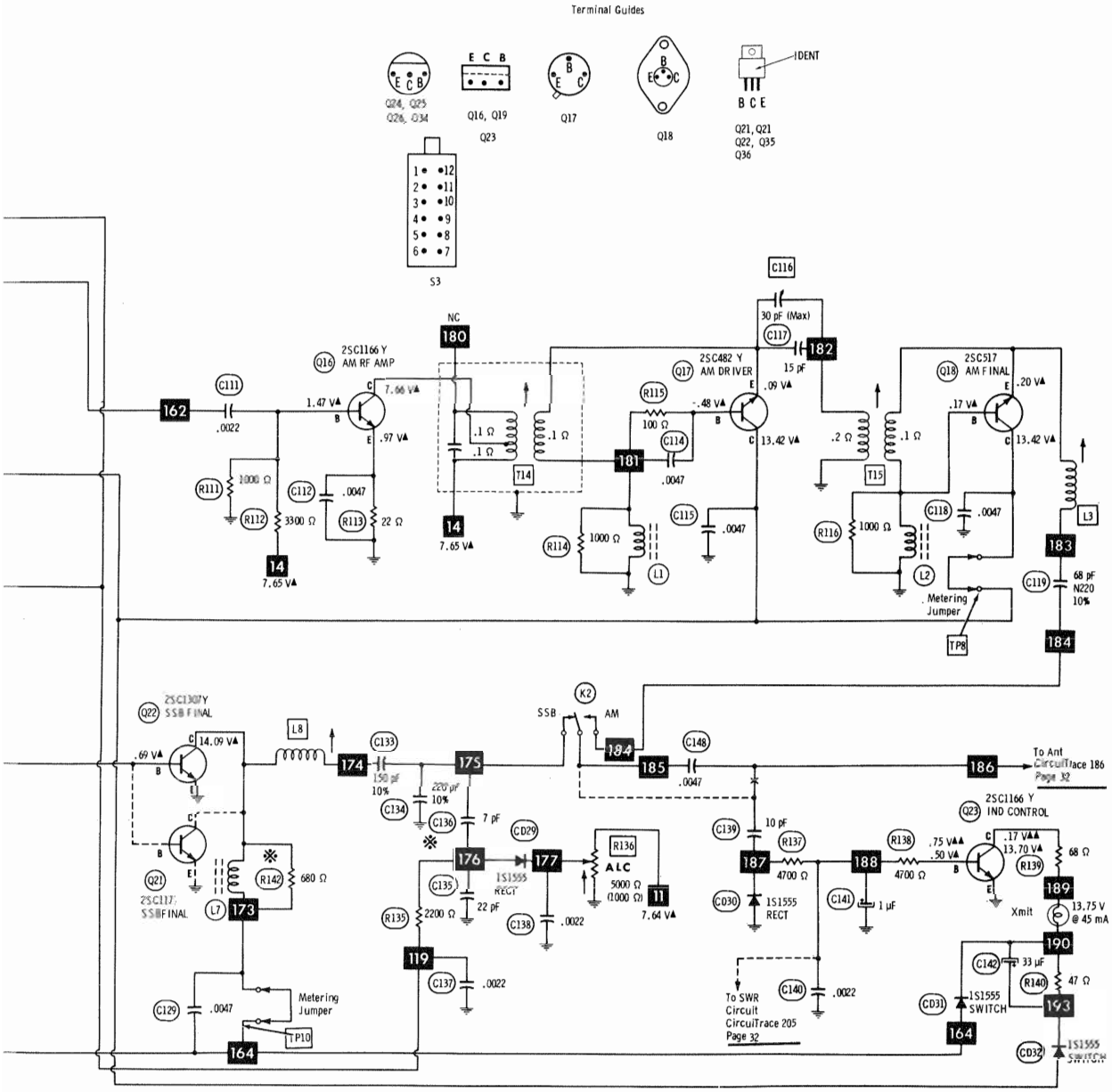
Terminal Guides
Q24, Q25
Q26, Q34
E C B
Q16, Q19
Q23
Q17
Q18
IDENT
B C E
Q21, Q21
Q22, Q35
Q36
S3
NC
180
C116
30 pF (Max)
C117
182
15 pF
Q16
2SC1166 Y
AM RF AMP
Q17
2SC482 Y
AM DRIVER
Q18
2SC517
AM FINAL
162
C111
.0022
1.47 V
7.66 V
.97 V
.09 V
.48 V
.20 V
.17 V
13.42 V
R115
100 Ω
C114
.0047
181
R111
1000 Ω
C112
.0047
R112
3300 Ω
R113
22 Ω
14
7.65 V
T14
.1 Ω
.2 Ω
T15
C115
.0047
R114
1000 Ω
L1
R116
1000 Ω
L2
C118
.0047
L3
183
C119
68 pF
N220
10%
Metering
Jumper
TP8
184
Q22
2SC1307Y
SSB FINAL
.69 V
14.09 V
L8
174
C133
150 pF
10%
175
220 pF
10%
C134
C136
7 pF
K2
SSB
AM
184
185
C148
.0047
186
To Ant
CircuiTrace 186
Page 32
Q23
2SC1166 Y
IND CONTROL
.17 V
13.70 V
68 Ω
R139
189
13.75 V
@ 45 mA
Xmit
Q21
2SC1307
SSB FINAL
R142
680 Ω
L7
173
176
CD29
177
1S1555
RECT
R136
ALC
5000 Ω
(1000 Ω)
11
7.64 V
C135
22 pF
R135
2200 Ω
C138
.0022
119
C137
.0022
C129
.0047
Metering
Jumper
TP10
164
C139
10 pF
R137
4700 Ω
187
CD30
1S1555
RECT
188
R138
4700 Ω
.75 V
.50 V
C141
1 µF
To SWR
Circuit
CircuiTrace 205
Page 32
C140
.0022
190
C142
33 µF
R140
47 Ω
193
CD31
1S1555
SWITCH
164
CD32
1S1555
SWITCH

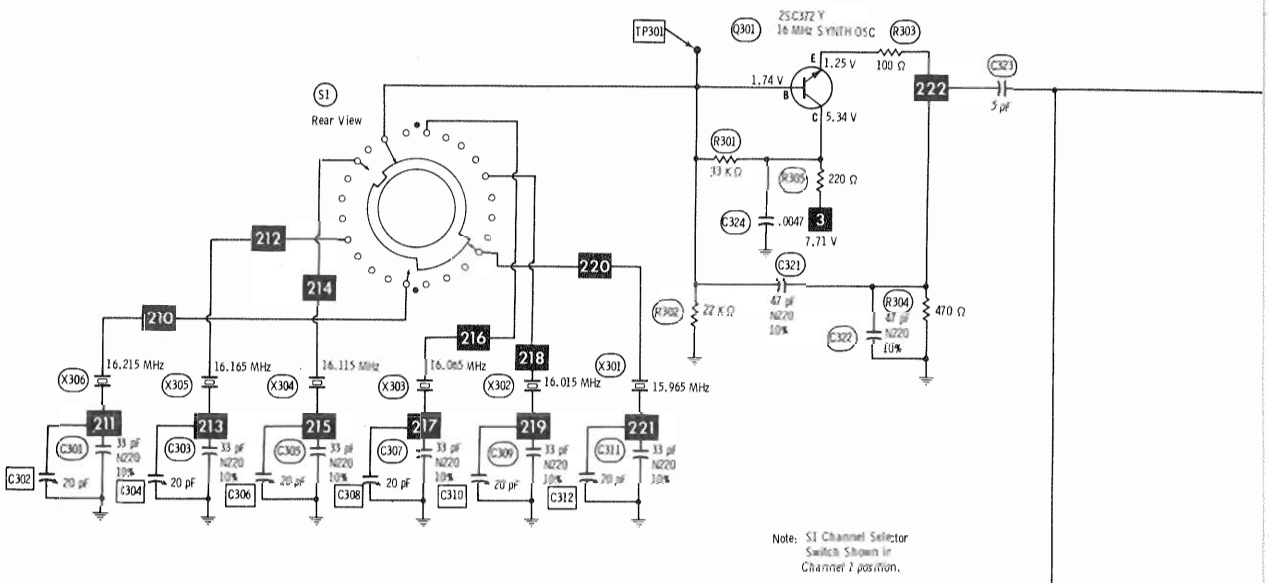

Note: S1 Channel Selector Switch Shown in Channel 1 position.

Chan	Crystal Complement	Chan	Crystal Complement	Chan	Crystal Complement	Chan	Crystal Complement
1	X301, X307	7	X302, X309	13	X304, X307	19	X305, X309
2	X301, X308	8	X302, X310	14	X304, X308	20	X305, X310
3	X301, X309	9	X303, X307	15	X304, X309	21	X306, X307
4	X301, X310	10	X303, X308	16	X304, X310	22	X306, X308
5	X302, X307	11	X303, X309	17	X305, X307		
6	X302, X308	12	X303, X310	18	X305, X308	23	X306, X310

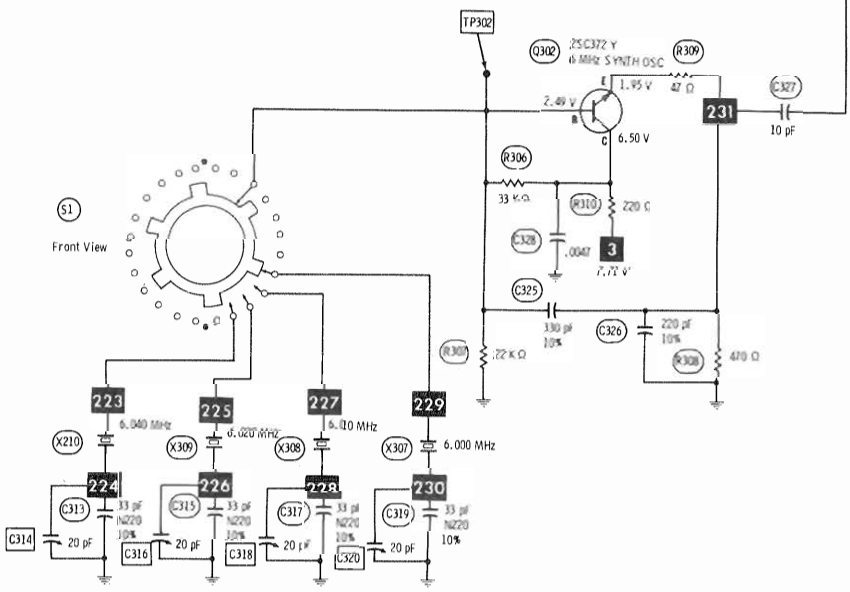

A PHOTOFACT STANDARD NOTATION SCHEMATIC
with CIRCUITRACE™

© Howard W. Sams & Co., Inc. 1974

SEE NOTES ON PAGE 30

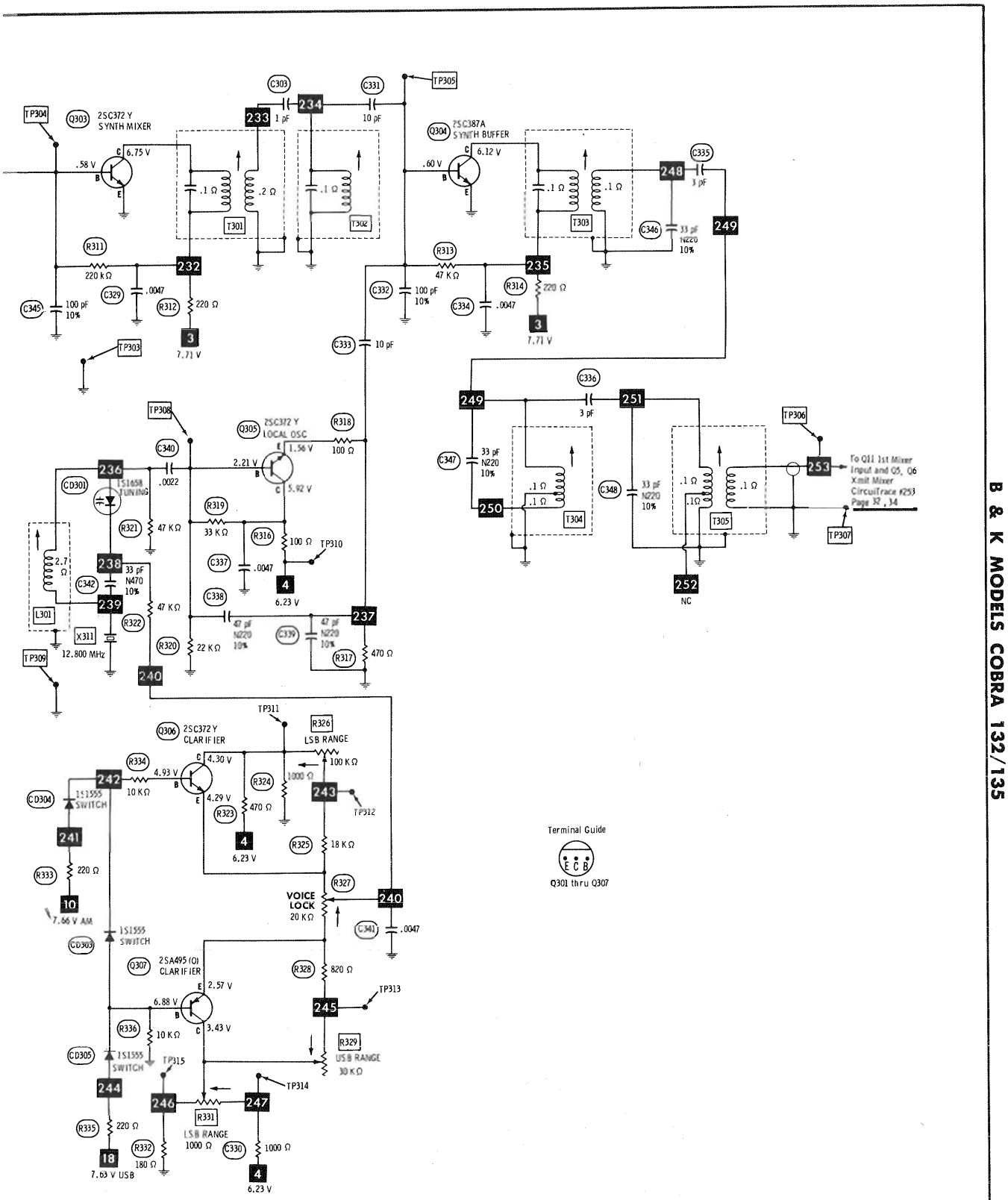

B & K MODELS COBRA 132/135

SYNTHESIZER CIRCUIT---LATE VERSION

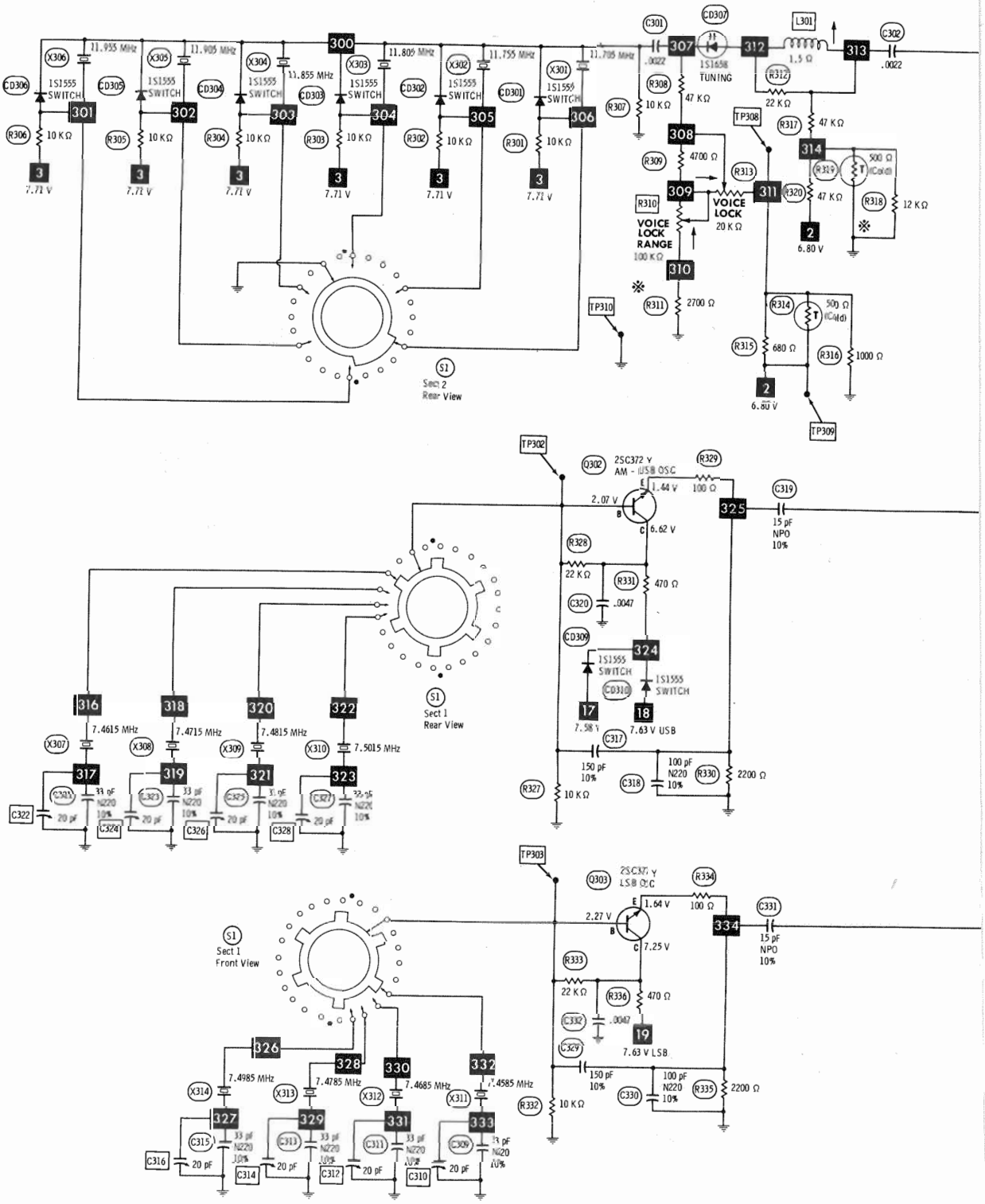

A PHOTOFACT STANDARD NOTATION SCHEMATIC
with CIRCUITRACE
© Howard W. Sams & Co., Inc. 1974

SEE NOTES ON PAGE 30

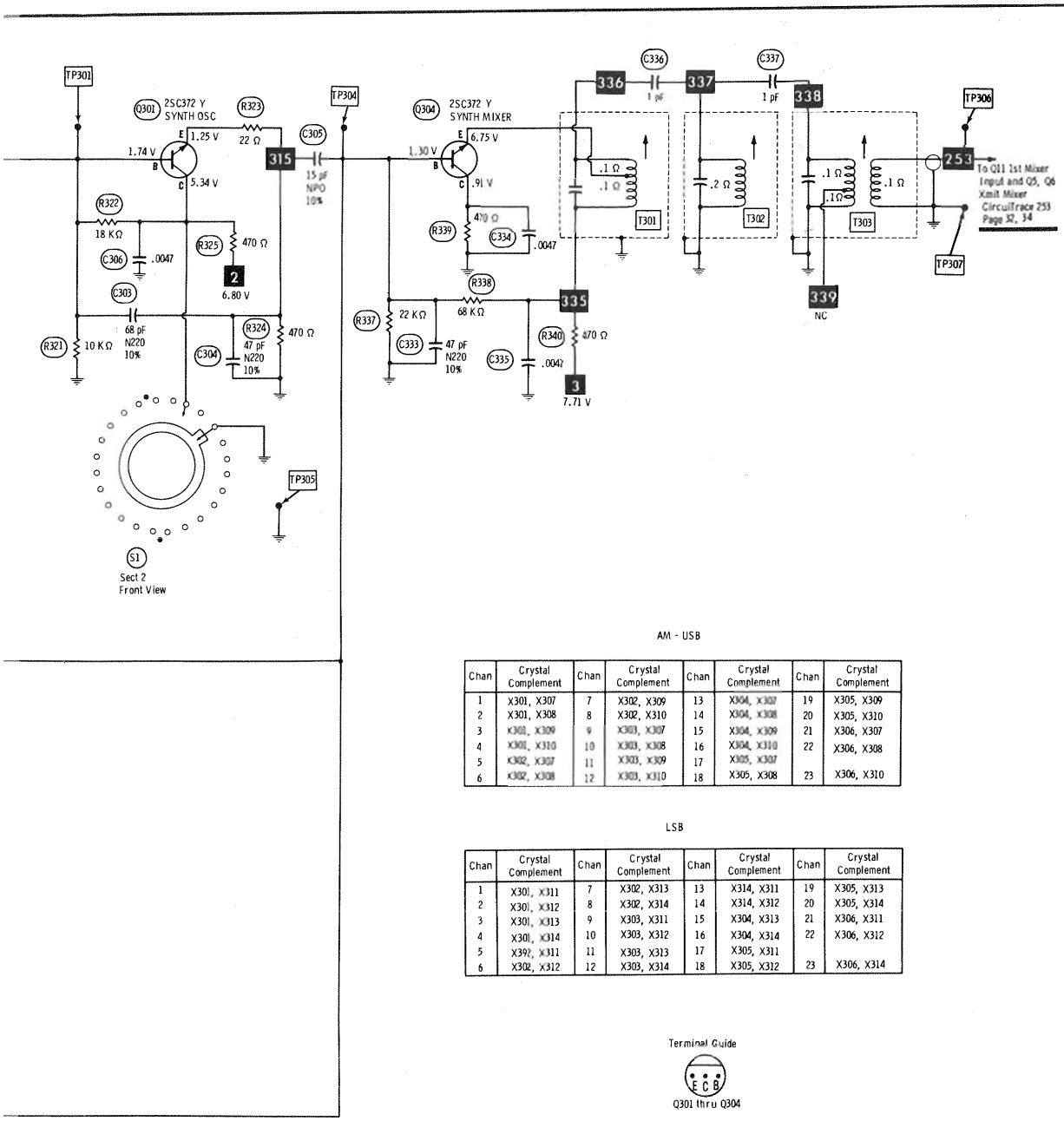

AM - USB

Chan	Crystal Complement	Chan	Crystal Complement	Chan	Crystal Complement	Chan	Crystal Complement
1	X301, X307	7	X302, X309	13	X304, X307	19	X305, X309
2	X301, X308	8	X302, X310	14	X304, X308	20	X305, X310
3	X301, X309	9	X303, X307	15	X304, X309	21	X306, X307
4	X301, X310	10	X303, X308	16	X304, X310	22	X306, X308
5	X302, X307	11	X303, X309	17	X305, X307		
6	X302, X308	12	X303, X310	18	X305, X308	23	X306, X310

LSB

Chan	Crystal Complement	Chan	Crystal Complement	Chan	Crystal Complement	Chan	Crystal Complement
1	X301, X311	7	X302, X313	13	X314, X311	19	X305, X313
2	X301, X312	8	X302, X314	14	X314, X312	20	X305, X314
3	X301, X313	9	X303, X311	15	X304, X313	21	X306, X311
4	X301, X314	10	X303, X312	16	X304, X314	22	X306, X312
5	X392, X311	11	X303, X313	17	X305, X311		
6	X302, X312	12	X303, X314	18	X305, X312	23	X306, X314

Terminal Guide

Q301 thru Q304

B & K MODELS COBRA 132/135

SYNTHESIZER CIRCUIT---EARLY VERSION

PARTS LIST AND DESCRIPTION (CONTINUED)

(When ordering parts, state Model, Part Number, and Description.)

SEMICONDUCTORS(cont)

ITEM No.	TYPE / MFGR. No. / PART No.	REPLACEMENT DATA						
		GENERAL ELECTRIC PART No.	INTERNATIONAL RECTIFIER PART No.	MALLORY PART No.	MOTOROLA PART No.	RCA PART No.	SPRAGUE PART No.	SYLVANIA PART No.
Q2	2SC372Y/ 176-029-9-001	GE-20	TR-24	PTC115	HEP54	SK3018	RT107	ECG 108
Q3	2SC372Y/ 176-029-9-001	GE-20	TR-24	PTC115	HEP54	SK3018	RT107	ECG 108
Q4	2SC372Y/ 176-029-9-001	GE-20	TR-24	PTC115	HEP54	SK3018	RT107	ECG 108
Q5	2SC372Y/ 176-029-9-001	GE-20	TR-24	PTC115	HEP54	SK3018	RT107	ECG 108
Q6	2SC372Y/ 176-029-9-001	GE-20	TR-24	PTC115	HEP54	SK3018	RT107	ECG 108
Q7	2SC372Y/ 176-029-9-001	GE-20	TR-24	PTC115	HEP54	SK3018	RT107	ECG 108
Q8	2SK19BL/ 182-009-9-001	GE-FET-2	FE-100	PTC152	HEPF0021	SK3116	RT175	ECG 132
Q9	2SC372Y/ 176-029-9-001	GE-20	TR-24	PTC115	HEP54	SK3018	RT107	ECG 108
Q10	2SC372Y/ 176-029-9-001	GE-20	TR-24	PTC115	HEP54	SK3018	RT107	ECG 108
Q11	2SC785R/ 176-037-9-001	GE-20	TR-71	PTC121	HEP53	SK3018	RT108	ECG 107
Q12	2SC372Y/ 176-029-9-001	GE-20	TR-24	PTC115	HEP54	SK3018	RT107	ECG 108
Q13	2SC372Y/ 176-029-9-001	GE-20	TR-24	PTC115	HEP54	SK3018	RT107	ECG 108
Q14	2SC372Y/ 176-029-9-001	GE-20	TR-24	PTC115	HEP54	SK3018	RT107	ECG 108
Q15	2SC372Y/ 176-029-9-001	GE-20	TR-24	PTC115	HEP54	SK3018	RT107	ECG 108
Q16	2SC1166Y/ 176-037-9-002	GE-18	TR-63	PTC143	HEP713	SK3024	RT110	ECG 154
Q17	2SC482Y/ 176-029-9-002		TR-65		HEP75	SK3048		ECG 195
Q18	2SC517				HEPS3001	SK3049		ECG 224
	2SC571/ 172-009-9-001 (1)				HEPS3001	SK3049		ECG 224
Q19	2SC1166Y/ 176-037-9-002	GE-18	TR-63	PTC143	HEP713	SK3024	RT110	ECG 154
Q20	2SC1237E/ 172-013-9-001	GE-66		PTC110				
	2SC1173/ 172-013-9-001 (1)	GE-66		PTC110				
Q22	2SC1307	GE-66		PTC110				
	2SC1173/ 172-013-9-001 (1)	GE-66		PTC110				
	2SC1237/ 172-013-9-001 (1)	GE-66		PTC110				
Q23	2SC1166Y/ 176-037-9-002	GE-18	TR-63	PTC143	HEP713	SK3024	RT110	ECG 154
Q24	2SA562(O)/ 177-006-9-002	GE-21	TR-19	PTC103	HEP242	SK3114	RT115	ECG 129
Q25	2SA562(O)/ 177-006-9-002	GE-21	TR-19	PTC103	HEP242	SK3114	RT115	ECG 129
Q26	2SC732BL/ 176-031-9-002	GE-20	TR-21	PTC136	HEP731	SK3124	RT102	ECG 123A
Q27	2SC372Y/ 176-029-9-001	GE-20	TR-24	PTC115	HEP54	SK3018	RT107	ECG 108
Q28	2SC372Y/ 176-029-9-001	GE-20	TR-24	PTC115	HEP54	SK3018	RT107	ECG 108
Q29	2SA495(O)/ 177-006-9-001	GE-21	TR-30	PTC103	HEP715	SK3114	RT115	ECG 159
Q30	2SA495(O)/ 177-006-9-001	GE-21	TR-30	PTC103	HEP715	SK3114	RT115	ECG 159
Q31	2SC733Y/ 176-037-9-003	GE-20	TR-24	PTC123	HEP729	SK3122	RT100	ECG 123A
Q32	2SC733Y/ 176-037-9-003	GE-20	TR-24	PTC123	HEP729	SK3122	RT100	ECG 123A
Q33	2SC372Y/ 176-029-9-001	GE-20	TR-24	PTC115	HEP54	SK3018	RT107	ECG 108
Q34	2SC735(O)/ 176-031-9-001	GE-17	TR-25	PTC123	HEP53	SK3124	RT102	ECG 123A
Q35	2SD235Y/ 172-010-9-001	GE-66	TR-76	PTC110	HEP701	SK3054	RT154	ECG 152
Q36	2SD235Y/ 172-019-9-001	GE-66	TR-76	PTC110	HEP701	SK3054	RT154	ECG 152
Q37	2SC372Y/ 176-029-9-001	GE-20	TR-24	PTC115	HEP54	SK3018	RT107	ECG 108
Q38	2SC372Y/ 176-029-9-001	GE-20	TR-24	PTC115	HEP54	SK3018	RT107	ECG 108
Q39	2SD235Y/ 172-010-9-001	GE-66	TR-76	PTC110	HEP701	SK3054	RT154	ECG 152
USED IN LATE SYNTHESIZER VERSIONS								
Q301	2SC372Y/ 176-029-9-001	GE-20	TR-24	PTC115	HEP54	SK3018	RT107	ECG 108
Q302	2SC372Y/ 176-029-9-001	GE-20	TR-24	PTC115	HEP54	SK3018	RT107	ECG 108
Q303	2SC372Y/ 176-029-9-001	GE-20	TR-24	PTC115	HEP54	SK3018	RT107	ECG 108
Q304	2SC387A	GE-11	TR-83	PTC133	HEP720	SK3019	RT108	ECG 108
Q305	2SC372Y/ 176-029-9-001	GE-20	TR-24	PTC115	HEP54	SK3018	RT107	ECG 108
Q306	2SC372Y/ 176-029-9-001	GE-20	TR-24	PTC115	HEP54	SK3018	RT107	ECG 108
Q307	2SA495(O)/ 177-006-9-001	GE-21	TR-30	PTC103	HEP715	SK3114	RT115	ECG 159
Q501	2SC372Y/ 176-029-9-001	GE-20	TR-24	PTC115	HEP54	SK3018	RT107	ECG 108
Q502	2SD235Y/ 172-010-9-001	GE-66	TR-76	PTC110	HEP701	SK3054	RT154	ECG 152
Q503	2SC735(O)/ 176-031-9-001	GE-17	TR-25	PTC123	HEP53	SK3124	RT102	ECG 123A

PARTS LIST AND DESCRIPTION (CONTINUED)

(When ordering parts, state Model, Part Number, and Description.)

SEMICONDUCTORS (cont)

ITEM No.	TYPE / MFGR. No./PART No.	REPLACEMENT DATA						
		GENERAL ELECTRIC PART No.	INTERNATIONAL RECTIFIER PART No.	MALLORY PART No.	MOTOROLA PART No.	RCA PART No.	SPRAGUE PART No.	SYLVANIA PART No.
USED IN EARLY SYNTHESIZER VERSIONS								
Q301	2SC372Y/ 176-029-9-001	GE-20	TR-24	PTC115	HEP54	SK3018	RT107	ECG 108
Q302	2SC372Y/ 176-029-9-001	GE-20	TR-24	PTC115	HEP54	SK3018	RT107	ECG 108
Q303	2SC372Y/ 176-029-9-001	GE-20	TR-24	PTC115	HEP54	SK3018	RT107	ECG 108
Q304	2SC372Y/ 176-029-9-001	GE-20	TR-24	PTC115	HEP54	SK3018	RT107	ECG 108

(1) Used in some versions.
(8) Varactor

ELECTROLYTIC CAPACITORS

ITEM No.	RATING	REPLACEMENT DATA					
		MFGR. PART No.	ARCO PART No.	CENTRALAB PART No.	CORNELL-DUBILIER PART No.	MALLORY PART No.	SPRAGUE PART No.
C88 1	1 50 V		RME-A-J-001	EP50-1	PC1-50	MTV1CB50	EV-1615
C95	3.3 NP 6.3 V					TCN503A	
C96	1 NP 6.3 V					TCN501A	
C141	1 50 V		RME-A-J-001	EP50-1	PC1-50	MTV1CB50	EV-1615
C142	33 16 V		ME-3-E-035	EP15-25	PC30-25	MTV30CB25	EV-1325
C151	1 50 V		RME-A-J-001	EP50-1	PC1-50	MTV1CB50	EV-1615
C152	33 3 V					TDC336M010FL	SD6-339
C154	1 50 V		RME-A-J-001	EP50-1	PC1-50	MTV1CB50	EV-1615
C157	1 50 V		RME-A-J-001	EP50-1	PC1-50	MTV1CB50	EV-1615
C158	10 16 V		RME-B-E-010	EP15-10	PC10-25	VTT10A25	EV-1222
C160	1 50 V		RME-A-J-001	EP50-1	PC1-50	MTV1CB50	EV-1615
C163	10 16 V		RME-B-E-010	EP15-10	PC10-25	VTT10A25	EV-1222
C164	1 50 V		RME-A-J-001	EP50-1	PC1-50	MTV1CB50	EV-1615
C165	100 3 V					TDC107M010GL	SD4-1009
C166	1 50 V		RME-A-J-001	EP50-1	PC1-50	MTV1CB50	EV-1615
C167	1 50 V		RME-A-J-001	EP50-1	PC1-50	MTV1CB50	EV-1615
C168	1 50 V		RME-A-J-001	EP50-1	PC1-50	MTV1CB50	EV-1615
C169	33 16 V		ME-3-E-035	EP15-25	PC30-25	MTV30CB25	EV-1325
C170	1 50 V		RME-A-J-001	EP50-1	PC1-50	MTV1CB50	EV-1615
C173	1 50 V		RME-A-J-001	EP50-1	PC1-50	MTV1CB50	EV-1615
C177	1 50 V		RME-A-J-001	EP50-1	PC1-50	MTV1CB50	EV-1615
C178	1 50 V		RME-A-J-001	EP50-1	PC1-50	MTV1CB50	EV-1615
C183	1 50 V		RME-A-J-001	EP50-1	PC1-50	MTV1CB50	EV-1615
C187	33 3 V					TDC336M010FL	SD6-339
C193	33 3 V					TDC336M010FL	SD6-339
C195	33 16 V		ME-3-E-035	EP15-25	PC30-25	MTV30CB25	EV-1325
C196	1 50 V		RME-A-J-001	EP50-1	PC1-50	MTV1CB50	EV-1615
C199	10 16 V		RME-B-E-010	EP15-10	PC10-25	VTT10A25	EV-1222
C210	100 16 V		RME-E-E-100	EP15-100	PC100-16	MTV100CD15	EV-1230
C211	33 16 V		ME-3-E-035	EP15-25	PC30-25	MTV30CB25	EV-1325
C213	470 25 V		RME-N-G-500	EP30-500	WBR500-25	TC2505C	EV-1350
C343	10 16 V		RME-B-E-010	EP15-10	PC10-25	VTT10A25	EV-1222
C401	1 50 V		RME-A-J-001	EP50-1	PC1-50	MTV1CB50	EV-1615
C501	33 16 V		ME-3-E-035	EP15-25	PC30-25	MTV30CB25	EV-1325
C502	4700 25 V		ME-G5000		AA0155A	TC2550	TVL1247
USED IN EARLY SYNTHESIZER VERSIONS							
C307	10 16 V		RME-B-E-010	EP15-10	PC10-25	VTT10A25	EV-1222

CAPACITORS

ITEM No.	RATING			MFGR. PART No.	REPLACEMENT DATA				
					ARCO/ELMENCO PART No.	CENTRALAB PART No.	CORNELL-DUBILIER PART No.	MALLORY PART No.	SPRAGUE PART No.
C1	20			028-026-9-001					
C2	33	N220	10%		*			*	10TCR-Q33
C3	150		10%		CCD-151	DD-151	GP150	GP315	10TS-T15
C4	100	N220	10%		*			*	10TCR-T10
C5	15				CCTD-150	DTZ-15	NP015	CN0415	10TCC-Q15
C6	.0047				CCD-472	DD-472G	GP4700	JF247	10TS-D47
C7	20			028-026-9-001					
C8	33	N220	10%		*			*	10TCR-Q33
C9	150		10%		CCD-151	DD-151	GP150	GP315	10TS-T15
C10	100	N220	10%		*			*	10TCR-T10
C11	15				CCTD-150	DTZ-15	NP015	CN0415	10TCC-Q15
C12	.0047				CCD-472	DD-472G	GP4700	JF247	10TS-D47
C13	.0047				CCD-472	DD-472G	GP4700	JF247	10TS-D47
C14	.0022				CCD-222	DD-222	GP2200	GP222	10TS-D22
C15	.0022				CCD-222	DD-222	GP2200	GP222	10TS-D22
C16	.0047				CCD-472	DD-472G	GP4700	JF247	10TS-D47
C17	.0047				CCD-472	DD-472G	GP4700	JF247	10TS-D47
C18	.0047				CCD-472	DD-472G	GP4700	JF247	10TS-D47
C19	.0047				CCD-472	DD-472G	GP4700	JF247	10TS-D47
C20	20			028-026-9-001					
C21	10	N750	10%		CCTN-100	DTN-10	N10	CN7410	10TCU-Q10
C31	.0047				CCD-472	DD-472G	GP4700	JF247	10TS-D47
C32	.0047				CCD-472	DD-472G	GP4700	JF247	10TS-D47
C33	.0047				CCD-472	DD-472G	GP4700	JF247	10TS-D47
C34	.0047				CCD-472	DD-472G	GP4700	JF247	10TS-D47
C35	.0047				CCD-472	DD-472G	GP4700	JF247	10TS-D47
C36	.0047				CCD-472	DD-472G	GP4700	JF247	10TS-D47
C37	.0047				CCD-472	DD-472G	GP4700	JF247	10TS-D47
C38	.0047				CCD-472	DD-472G	GP4700	JF247	10TS-D47
C39	.0047				CCD-472	DD-472G	GP4700	JF247	10TS-D47
C40	.0022				CCD-222	DD-222	GP2200	GP222	10TS-D22
C41	.0022				CCD-222	DD-222	GP2200	GP222	10TS-D22
C51	.0022				CCD-222	DD-222	GP2200	GP222	10TS-D22
C52	.0022				CCD-222	DD-222	GP2200	GP222	10TS-D22
C53	.0047				CCD-472	DD-472G	GP4700	JF247	10TS-D47
C54	.0022				CCD-222	DD-222	GP2200	GP222	10TS-D22

PARTS LIST AND DESCRIPTION (CONTINUED)

(When ordering parts, state Model, Part Number, and Description.)

CAPACITORS (cont)

ITEM No.	RATING			MFGR. PART No.	REPLACEMENT DATA				
					ARCO/ELMENCO PART No.	CENTRALAB PART No.	CORNELL-DUBILIER PART No.	MALLORY PART No.	SPRAGUE PART No.
C55	.0022				CCD-222	DD-222	GP2200	GP222	10TS-D22
C56	.0047				CCD-472	DD-472G	GP4700	JF247	10TS-D47
C57	2					DTZ-2R2	NP02P2	CN0522	10TCC-V22
C58	1						CN0510		10TCC-V10
C59	.0022				CCD-222	DD-222	GP2200	GP222	10TS-D22
C60	.0047				CCD-472	DD-472G	GP4700	JF247	10TS-D47
C61	.0047				CCD-472	DD-472G	GP4700	JF247	10TS-D47
C62	.0047				CCD-472	DD-472G	GP4700	JF247	10TS-D47
C69	.01				CCD-103	DD-103	GP10000	JF110	10TS-S10
C71	.0022				CCD-222	DD-222	GP2200	GP222	10TS-D22
C72	.0022				CCD-222	DD-222	GP2200	GP222	10TS-D22
C73	.0033		10%		6DP-1-332		DMF6D33	EWF6233	6PS-D33
C74	.0047				CCD-472	DD-472G	GP4700	JF247	10TS-D47
C75	.0022				CCD-222	DD-222	GP2200	GP222	10TS-D22
C76	.0022				CCD-222	DD-222	GP2200	GP222	10TS-D22
C77	10	NPO			CCTO-100	DTZ-10	NP010	CN0410	10TCC-Q10
C78	.0022				CCD-222	DD-222	GP2200	GP222	10TS-D22
C79	.0022				CCD-222	DD-222	GP2200	GP222	10TS-D22
C80	1						CN0510		10TCC-V10
C81	.0022				CCD-222	DD-222	GP2200	GP222	10TS-D22
C82	.0047				CCD-472	DD-472G	GP4700	JF247	10TS-D47
C83	5						NP05		10TCC-V50
C84	.0047				CCD-472	DD-472G	GP4700	JF247	10TS-D47
C85	1						CN0510		10TCC-V10
C86	.0047				CCD-472	DD-472G	GP4700	JF247	10TS-D47
C87	.0047				CCD-472	DD-472G	GP4700	JF247	10TS-D47
C89	.01				CCD-103	DD-103	GP10000	JF110	10TS-S10
C90	.0033				CCD-332	DD-332	GP3300	JF233	2SS-D33
C91	.033		10%		4DP-2-333		DPMS6S33	EWF4133	4PS-S33
C92	.033		10%		4DP-2-333		DPMS6S33	EWF4133	4PS-S33
C93	.033		10%		4DP-2-333		DPMS6S33	EWF4133	4PS-S33
C94	.0047				CCD-472	DD-472G	GP4700	JF247	10TS-D47
C97	.033		10%		4DP-2-333		DPMS6S33	EWF4133	4PS-S33
C98	5						NP05		10TCC-V50
C99	150		10%		CCD-151	DD-151	GP150	GP315	10TS-T15
C100	100	N220	10%		*			*	10TCR-T10
C101	.22				CCTO-200	DTZ-20	NP020	CN0420	10TCC-Q20
C102	.0047				CCD-472	DD-472G	GP4700	JF247	10TS-D47
C103	.0047				CCD-472	DD-472G	GP4700	JF247	10TS-D47
C111	.0022				CCD-222	DD-222	GP2200	GP222	10TS-D22
C112	.0047				CCD-472	DD-472G	GP4700	JF247	10TS-D47
C113	.0047				CCD-472	DD-472G	GP4700	JF247	10TS-D47
C114	.0047				CCD-472	DD-472G	GP4700	JF247	10TS-D47
C115	.0047				CCD-472	DD-472G	GP4700	JF247	10TS-D47
C116	30			028-026-9-002					
C117	15				CCTO-150	DTZ-15	NP015	CN0415	10TCC-Q15
C118	.0047				CCD-472	DD-472G	GP4700	JF247	10TS-D47
C119	68	N220	10%		*			*	10TCR-Q68
C120	.0022				CCD-222	DD-222	GP2200	GP222	10TS-D22
C121	.0047				CCD-472	DD-472G	GP4700	JF247	10TS-D47
C122	.0047				CCD-472	DD-472G	GP4700	JF247	10TS-D47
C123	.0047				CCD-472	DD-472G	GP4700	JF247	10TS-D47
C124	.0022				CCD-222	DD-222	GP2200	GP222	10TS-D22
C125	.0047				CCD-472	DD-472G	GP4700	JF247	10TS-D47
C126	100		10%		CCD-101	DD-101	GP100	GP310	10TS-T10
C127	150		10%		CCD-151	DD-151	GP150	GP315	10TS-T15
C128	.0047				CCD-472	DD-472G	GP4700	JF247	10TS-D47
C129	.0047				CCD-472	DD-472G	GP4700	JF247	10TS-D47
C130	.0047				CCD-472	DD-472G	GP4700	JF247	10TS-D47
C131	.0047				CCD-472	DD-472G	GP4700	JF247	10TS-D47
C132	.033				CCD-203	CK-303		GP130	TG-S30
C133	150		10%		CCD-151	DD-151	GP150	GP315	10TS-T15
C134	220		10%		CCD-221	DD-221	GP220	GP322	10TS-T22
C135	22				CCTO-200	DTZ-20	NP020	CN0420	10TCC-Q20
C136	7					DTZ-6R8	NP06P8	CN0568	10TCC-V68
C137	.0022				CCD-222	DD-222	GP2200	GP222	10TS-D22
C138	.0022				CCD-222	DD-222	GP2200	GP222	10TS-D22
C139	10				CCTO-100	DTZ-10	NP010	CN0410	10TCC-Q10
C140	.0022				CCD-222	DD-222	GP2200	GP222	10TS-D22
C143	100		10%		CCD-101	DD-101	GP100	GP310	10TS-T10
C144	47				CCTO-470	DTZ-47	NP047	CN0447	10TCC-Q47
C145	100		10%		CCD-101	DD-101	GP100	GP310	10TS-T10
C146	20				CCTO-200	DTZ-20	NP020	CN0420	10TCC-Q20
C149	.0022				CCD-222	DD-222	GP2200	GP222	10TS-D22
C150	.0047				CCD-472	DD-472G	GP4700	JF247	10TS-D47
C151	.033				CCD-203	CK-303		GP130	TG-S30
C153	.0047				CCD-472	DD-472G	GP4700	JF247	10TS-D47
C155	.0047				CCD-472	DD-472G	GP4700	JF247	10TS-D47
C156	.0047				CCD-472	DD-472G	GP4700	JF247	10TS-D47
C159	.0047				CCD-472	DD-472G	GP4700	JF247	10TS-D47
C161	.0047				CCD-472	DD-472G	GP4700	JF247	10TS-D47
C162	.01		10%		1DP-1-103	CPR-10000J	DPMS6S1	EWFTA110	225P10391WD3
C171	.015				CCD-103	CK-103	MGP01	TA110	TG-S10
C174	.033				CCD-203	CK-303		GP130	TG-S30
C175	.022				CCD-203	CK-203	MGP02	TA120	TG-S20
C176	.0047				CCD-472	DD-472G	GP4700	JF247	10TS-D47
C179	.033		10%		4DP-2-333		DPMS6S33	EWF4133	4PS-S33
C180	.0047				CCD-472	DD-472G	GP4700	JF247	10TS-D47
C181	.0047				CCD-472	DD-472G	GP4700	JF247	10TS-D47
C182	.0022				CCD-222	DD-222	GP2200	GP222	10TS-D22
C184	.033		10%		4DP-2-333		DPMS6S33	EWF4133	4PS-S33
C185	.0047				CCD-472	DD-472G	GP4700	JF247	10TS-D47
C186	.0022				CCD-222	DD-222	GP2200	GP222	10TS-D22
C188	.0022				CCD-222	DD-222	GP2200	GP222	10TS-D22
C189	.0022				CCD-222	DD-222	GP2200	GP222	10TS-D22
C190	.0022				CCD-222	DD-222	GP2200	GP222	10TS-D22
C191	.0022				CCD-222	DD-222	GP2200	GP222	10TS-D22
C192	.0022				CCD-222	DD-222	GP2200	GP222	10TS-D22
C194	.0022				CCD-222	DD-222	GP2200	GP222	10TS-D22
C198	.0047				CCD-472	DD-472G	GP4700	JF247	10TS-D47
C200	.0047				CCD-472	DD-472G	GP4700	JF247	10TS-D47
C201	.0047				CCD-472	DD-472G	GP4700	JF247	10TS-D47

PARTS LIST AND DESCRIPTION (CONTINUED)

(When ordering parts, state Model, Part Number, and Description.)

CAPACITORS (cont)

ITEM No.	RATING			MFGR. PART No.	REPLACEMENT DATA ARCO/ELMENCO PART No.	CENTRALAB PART No.	CORNELL-DUBILIER PART No.	MALLORY PART No.	SPRAGUE PART No.
C202	.0047				CCD-472	DD-472G	GP4700	JF247	10TS-D47
C212	.0047				CCD-472	DD-472G	GP4700	JF247	10TS-D47
C214	.0047				CCD-472	DD-472G	GP4700	JF247	10TS-D47
C215	.0047				CCD-472	DD-472G	GP4700	JF247	10TS-D47
C216	.0047				CCD-472	DD-472G	GP4700	JF247	10TS-D47
C217	.0047				CCD-472	DD-472G	GP4700	JF247	10TS-D47
C218	.0022				CCD-222	DD-222	GP2200	GP222	10TS-D22
C219	.0022				CCD-222	DD-222	GP2200	GP222	10TS-D22
C220	.0047				CCD-472	DD-472G	GP4700	JF247	10TS-D47
C301	33	N220	10%		*			*	10TCR-Q33
C302	20			028-026-9-001					
C303	33	N220	10%		*			*	10TCR-Q33
C304	20			028-026-9-001					
C305	33	N220	10%		*			*	10TCR-Q33
C306	20			028-026-9-001					
C307	33	N220	10%		*			*	10TCR-Q33
C308	20			028-026-9-001					
C309	33	N220	10%		*			*	10TCR-Q33
C310	20			028-026-9-001					
C311	33	N220	10%		*			*	10TCR-Q33
C312	20			028-026-9-001					
C313	33	N220	10%		*			*	10TCR-Q33
C314	20			028-026-9-001					
C315	33	N220	10%		*			*	10TCR-Q33
C316	20			028-026-9-001					
C317	33	N220	10%		*			*	10TCR-Q33
C318	20			028-026-9-001					
C319	33	N220	10%		*			*	10TCR-Q33
C320	20			028-026-9-001					
C321	47	N220	10%		*			*	10TCR-Q47
C322	47	N220	10%		*			*	10TCR-Q47
C323	5						NP05		10TCC-V50
C324	.0047				CCD-472	DD-472G	GP4700	JF247	10TS-D47
C325	330		10%		CCD-331	DD-331	GP330	GP333	10TS-T33
C326	220		10%		CCD-221	DD-221	GP220	GP322	10TS-T22
C327	10				CCTO-100	DTZ-10	NP010	CN0410	10TCC-Q10
C328	.0047				CCD-472	DD-472G	GP4700	JF247	10TS-D47
C329	.0047				CCD-472	DD-472G	GP4700	JF247	10TS-D47
C330	1						CN0510		10TCC-V10
C331	10				CCTO-100	DTZ-10	NP010	CN0410	10TCC-Q10
C332	100		10%		CCD-101	DD-101	GP100	GP310	10TS-T10
C333	10				CCTO-100	DTZ-10	NP010	CN0410	10TCC-Q10
C334	.0047				CCD-472	DD-472G	GP4700	JF247	10TS-D47
C335	3								10TCC-V30
C336	3								10TCC-V30
C337	.0047				CCD-472	DD-472G	GP4700	JF247	10TS-D47
C338	47	N220	10%		*			*	10TCR-Q47
C339	47	N220	10%		*			*	10TCR-Q47
C340	.0022				CCD-222	DD-222	GP2200	GP222	10TS-D22
C341	.0047				CCD-472	DD-472G	GP4700	JF247	10TS-D47
C342	33	N470	10%		*			*	10TCT-Q33
C345	100		10%		CCD-101	DD-101	GP100	GP310	10TS-T10
C346	33	N220	10%		*			*	10TCR-Q33
C347	33	N220	10%		*			*	10TCR-Q33
C348	33	N220	10%		*			*	10TCR-Q33
C402	.0022				CCD-222	DD-222	GP2200	GP222	10TS-D22
C403	22				CCTO-200	DTZ-20	NP020	CN0420	10TCC-Q20
C404	22				CCTO-200	DTZ-20	NP020	CN0420	10TCC-Q20
C405	.0022				CCD-222	DD-222	GP2200	GP222	10TS-D22
C406	.0047				CCD-472	DD-472G	GP4700	JF247	10TS-D47
C503	.0047				CCD-472	DD-472G	GP4700	JF247	10TS-D47
C504	.0047				CCD-472	DD-472G	GP4700	JF247	10TS-D47
USED IN EARLY SYNTHESIZER VERSIONS									
C301	.0022				CCD-222	DD-222	GP2200	GP222	10TS-D22
C302	.0022				CCD-222	DD-222	GP2200	GP222	10TS-D22
C303	68	N220	10%		*			*	10TCR-Q68
C304	47	N220	10%		*			*	10TCR-Q47
C305	15	NPO	10%		CCTO-150	DTZ-15	NP015	CN0415	10TCC-Q15
C306	.0047				CCD-472	DD-472G	GP4700	JF247	10TS-D47
C308	.0022				CCD-222	DD-222	GP2200	GP222	10TS-D22
C309	33	N220	10%		*			*	10TCR-Q33
C310	20			028-026-9-001					
C311	33	N220	10%		*			*	10TCR-Q33
C312	20			028-026-9-001					
C313	33	N220	10%		*			*	10TCR-Q33
C314	20			028-026-9-001					
C315	33	N220	10%		*			*	10TCR-Q33
C316	20			028-026-9-001					
C317	150		10%		CCD-151	DD-151	GP150	GP315	10TS-T15
C318	100	N220	10%		*			*	10TCR-T10
C319	15	NPO	10T		CCTO-150	DTZ-15	NP015	CN0415	10TCC-Q15
C320	.0047				CCD-472	DD-472G	GP4700	JF247	10TS-D47
C321	33	N220	10%		*			*	10TCR-Q33
C322	20			028-026-9-001					
C323	33	N220	10T		*			*	10TCR-Q33
C324	20			028-026-9-001					
C325	33	N220	10%		*			*	10TCR-Q33
C326	20			028-026-9-001					
C327	33	N220	10%		*			*	10TCR-Q33
C328	20			028-026-9-001					
C329	150		10%		CCD-151	DD-151	GP150	GP315	10TS-T15
C330	100	N220	10%		*			*	10TCR-T10
C331	15	NPO	10%		CCTO-150	DTZ-15	NP015	CN0415	10TCC-Q15
C332	.0047				CCD-472	DD-472G	GP4700	JF247	10TS-D47
C333	47	N220	10%		*			*	10TCR-Q47
C334	.0047				CCD-472	DD-472G	GP4700	JF247	10TS-D47
C335	.0047				CCD-472	DD-472G	GP4700	JF247	10TS-D47
C336	1						CN0510		10TCC-Q10
C337	1						CN0510		10TCC-Q10
C339	.0047				CCD-472	DD-472G	GP4700	JF247	10TS-D47

* Not normally in distributor's stock. Available thru distributor on order to manufacturer.

PARTS LIST AND DESCRIPTION (CONTINUED)

(When ordering parts, state Model, Part Number, and Description.)

CONTROLS (All wattages 1/2 watt, or less, unless listed)

ITEM No.	FUNCTION	RESIST-ANCE	REPLACEMENT DATA				
			MFGR. PART No.	CENTRALAB PART No.	CLAROSTAT PART No.	CTS—IRC PART No.	MALLORY PART No.
R23	Carrier Balance	5000		TSV-5K or T-5000	C-502	X201R502B	MTC53L1
R73	RF Gain	20 K	(19)				
R73a	RF Gain	20 K	008-176-9-003				
R313b	Voice Lock	20 K	(18)				
R121	Bias	1000		TSV-1K (2) or T-1000 (2)	C-102 (2)	X201R102B (2)	MTC13L1 (2)
R130	Bias	1000		TSV-1K (2) or T-1000 (2)	C-102 (2)	X201R102B (2)	MTC13L1 (2)
R136	ALC	1000	(18)	TSV-1K or T-1000	C-102	X201R102B	MTC13L1
	ALC	5000	(19)	TSV-5K or T-5000	C-502	X201R502B	MTC53L1
R141	RF Meter	100 K	(18)	TSV-100K (2) or T-100K (2)	C-104 (2)	X201R104B (2)	MTC15L1 (2)
R169	AGC	10 K		TSV-10K (2) or T-10K (2)	C-103 (2)	X201R103B (2)	MTC14L1 (2)
R181	Volume	50 K	(19)				
R204	Squelch Range	10 K		TSV-10K (2) or T-10K (2)	C-103 (2)	X201R103B (2)	MTC14L1 (2)
R207	Squelch	20 K	(19)				
	Squelch	20 K	008-176-9-004				
R181	Volume/Switch	50 K	(18)				
R310	Voice Lock Range	100 K		TSV-100K (2) or T-100K (2)	C-104 (2)	X201R104B (2)	MTC15L1 (2)
R313	Voice Lock	20 K	(19)				
R326	LSB Range	100 K					
R329	USB Range	30 K					
R331	LSB Range	1000					
R401	RF Meter	100 K		TSV-100K (2) or T-100K (2)	C-104 (2)	X201R104B (2)	MTC15L1 (2)
R402	SWR Cal/"S" & "RF" Switch	50 K	(19)				
R502	Voltage	1000		TSV-1K or T-1000	C-102	X201R102B	MTC13L1

(2) Cut off one of the end terminals and bend to fit PC board.
(18) Used in Model 132.
(19) Used in Model 135.

RESISTORS (Power and Special)

ITEM No.	RATING	REPLACEMENT DATA	
		WORKMAN PART No.	MFGR. PART No.
R197	.5 (1/4 W Carbon)		004-100-9-001
R234	39 (3 W WW)		006-005-9-100
R126	100 (Cold)		004-099-9-001 (D22A)
R134	40 (Cold)		004-108-9-001 (D61A)

ITEM No.	RATING	REPLACEMENT DATA	
		WORKMAN PART No.	MFGR. PART No.
R203	500 (Cold)		004-099-9-002 (D33A)
R314	500 (Cold)		004-099-9-002 (D33A)
R319	500 (Cold)		004-099-9-002 (D33A)

COILS (RF-IF)

ITEM No.	USE	REPLACEMENT DATA			
		PART No.	MEISSNER PART No.	MILLER PART No.	REMARKS
L1	RF Choke	042-009-9-001			(1) Number on unit.
L2	RF Choke	042-009-9-001			
L3	AM RF Output	044-025-9-002			
L4	RF Choke	042-009-9-001			
L5	RF Coil	041-054-9-001			
L6	RF Choke	041-009-9-001			
L7	RF Choke	041-009-9-001			
L8	SSB RF Output	041-054-9-002			
L9	Ant RF Coil	041-054-9-001			
L10	RF Choke	041-009-9-001			
L301	12 MHz Osc	L1871 (1)			LATE SYNTHESIZER VERSIONS
	11 MHz Osc	041-054-9-003 1794 (1)			EARLY SYNTHESIZER VERSIONS
T1	Bal Mod	066-015-9-001 L1786 (1)			
T2	Xmit RF	066-015-9-002 L1787 (1)			
T3	Xmit Mixer	066-015-9-003 L1785 (1)			
T4	Xmit RF	066-013-9-002			
T5	Xmit RF	066-013-9-002 L1641 (1)			
T6	Xmit RF	066-013-9-009 L1505 (1)			
T7	RF Amp	066-015-9-004 L1790 (1)			
T8	RF Amp	066-015-9-005 L1789 (1)			
T9	RF Amp	066-013-9-002 L1641 (1)			
T10	Rec Mixer Input	066-015-9-006 L1788 (1)			
T11	Rect Mixer Output	066-015-9-006 L1788 (1)			
T12	Input IF	060-014-9-004 DI0753 (1)		8810	
T13	Output IF	060-014-9-004 DI0753 (1)		8811	

PARTS LIST AND DESCRIPTION (CONTINUED)

(When ordering parts, state Model, Part Number, and Description.)

COILS (RF-IF)(cont)

ITEM No.	USE	REPLACEMENT DATA			
		PART No.	MEISSNER PART No.	MILLER PART No.	REMARKS
T14	AM RF	066-013-9-009 L1505 (1)			
T15	AM RF Driver	066-013-9-010			
T16	SSB Driver	066-015-9-007 L1791 (1)			
USED IN LATE SYNTHESIZER VERSIONS					
T301	Syn Mixer				
T302	Syn Mixer	L1841 (1)			
T303	Syn Bu				
T304	Syn Buffer	L1869 (1)			
T305	Syn Buffer	L1869 (1)			
USED IN EARLY SYNTHESIZER VERSIONS					
T301	Syn Mixer	066-015-9-008 L1784 (1)			
T302	Syn Mixer	066-015-9-008 L1784 (1)			
T303	Syn Mixer	066-015-9-008 L1784 (1)			

FILTER CHOKE

ITEM No.	RATINGS			REPLACEMENT DATA				NOTES
	CURRENT (Measured)	DC RES.	INDUCTANCE (0 CURRENT 1000~)	MFGR. PART No.	STANCOR PART No.	THORDARSON PART No.	TRIAD PART No.	
L11	1200 mA	.1	1mH	042-010-9-001				

TRANSFORMER (Driver)

ITEM No.	TURNS RATIO			REPLACEMENT DATA				NOTES
	PRI.	SEC. 1	SEC. 2	MFGR. PART No.	STANCOR PART No.	THORDARSON PART No.	TRIAD Part No.	
T17	2	1		068-005-9-001 (7378)	TA38			

TRANSFORMER (Audio Output)

ITEM No.	IMPEDANCE		REPLACEMENT DATA				NOTES
	PRI.	SEC.	MFGR. PART No.	STANCOR PART No.	THORDARSON PART No.	TRIAD PART No.	
T18	32	8	061-021-9-001				

TRANSFORMER (Power)

ITEM No.	RATING		REPLACEMENT DATA				NOTES
	PRI.	SEC. 1	MFGR. PART No.	STANCOR PART No.	THORDARSON PART No.	TRIAD PART No.	
T501	120 VAC @ 360 mA	14.8 VAC @ 1200 mA	(7879PT)				

SPEAKER

ITEM No.	TYPE	REPLACEMENT DATA		NOTES
		MFGR. PART No.	QUAM PART No.	
SP1	2" x 6" PM 16 ohms	580-012-9-001		

FUSE DEVICES

ITEM No.	DESCRIPTION	REPLACEMENT DATA						
		PART No.		BUSS PART No.		LITTELFUSE PART No.		WORKMAN PART No.
		DEVICE	HOLDER	DEVICE	HOLDER	DEVICE	HOLDER	DEVICE
F1	3 A Quick Acting (1) 1 A Quick Acting (2)	191-251-3-003	742-013-9-001	AGC 3 AGC 1	HDJ HPK	312003 312001	150145 342001AL	

(1) Model 132 (2) Model 135

PARTS LIST AND DESCRIPTION (CONTINUED)

(When ordering parts, state Model, Part Number, and Description.)

MISCELLANEOUS

ITEM No.	PART NAME	PART No.	NOTES
K1	Relay		Xmit/Rec (12 Volt) (Model 135)
	Relay	441-006-9-001	Xmit/Rec (12 Volt) (Model 132)
K2	Relay		SSB/AM (6 Volt) (Model 135)
	Relay	441-007-9-001	SSB/AM (6 Volt) (Model 132)
M1	Meter		S/RF/SWR (Model 135)
	Meter	320-039-9-001	S/RF (Model 132)
M3	Clock		(Model 135)
U1	IF Filter		7.8 MHz Crystal (Model 135)
	IF Filter	143-002-9-001	7.8 MHz Crystal (Model 132)
U2	IF Filter		455 kHz Ceramic (Model 135)
	IF Filter	140-008-9-001	455 kHz Ceramic (Model 132)
U3	IF Filter		455 kHz Ceramic (Model 135)
	IF Filter	140-008-9-002	455 kHz Ceramic (Model 132)
U4	Module		Noise Blanker (BNS002) (Model 135)
	Module	520-026-9-001	Noise Blanker (BNS002) (Model 132)
S1	Switch	083-149-9-001	Rotary Channel Selector (Model 135)
	Switch	083-138-9-001	Rotary Channel Selector (Model 132)
S2	Switch		Push Button AM/USB/LSB (Model 135)
	Switch	083-138-9-002	Rotary AM/USB/LSB (Model 132)
S3	Switch		Push Button PA/CB (Model 135)
	Switch	084-025-9-001	Slide PA/CB (Model 132)
S4	Switch		Push Button NB (Model 135)
	Switch	084-025-9-001	Slide NB (Model 132)
S5	Switch		Push Button Fwd/Rev (Model 135)
S501	Switch		Push Button On/Off (Model 135)
S502	Switch		Push Button Auto On/Off (Model 135)
X1	Crystal	132-006-9-001	7.7985 MHz
X2	Crystal	132-006-9-002	7.8015 MHz
X3	Crystal	132-008-9-001	7.3450 MHz (Model 135)
	Crystal	132-006-9-003	7.3435 MHz (Model 132)
X301	Crystal	132-008-9-002	15.965 MHz (Model 135)
	Crystal	132-006-9-004	11.705 MHz (Model 132)
X302	Crystal	132-008-9-003	16.015 MHz (Model 135)
	Crystal	132-006-9-005	11.755 MHz (Model 132)
X303	Crystal	132-008-9-004	16.065 MHz (Model 135)
	Crystal	132-006-9-006	11.805 MHz (Model 132)
X304	Crystal	132-008-9-005	16.115 MHz (Model 135)
	Crystal	132-006-9-007	11.855 MHz (Model 132)
X305	Crystal	132-008-9-006	16.165 MHz (Model 135)
	Crystal	132-006-9-008	11.905 MHz (Model 132)
X306	Crystal	132-008-9-007	16.215 MHz (Model 135)
	Crystal	132-006-9-009	11.955 MHz (Model 132)
X307	Crystal	132-008-9-008	6.000 MHz (Model 135)
	Crystal	132-006-9-010	7.4615 MHz (Model 132)
X308	Crystal	132-008-9-009	6.010 MHz (Model 135)
	Crystal	132-006-9-011	7.4715 MHz (Model 132)
X309	Crystal	132-008-9-010	6.020 MHz (Model 135)
	Crystal	132-006-9-012	7.4815 MHz (Model 132)
X310	Crystal	132-008-9-011	6.040 MHz (Model 135)
	Crystal	132-006-9-013	7.5015 MHz (Model 132)
X311	Crystal	132-008-9-012	12.800 MHz (Model 135)
	Crystal	132-006-9-014	7.4585 MHz (Model 132)
X312	Crystal	132-006-9-015	7.4685 MHz (Model 132)
X313	Crystal	132-006-9-016	7.4785 MHz (Model 132)
X314	Crystal	132-006-9-017	7.4985 MHz (Model 132)

CABINETS & CABINET PARTS (When ordering specify model, chassis & color)

ITEM		PART No.
Knob, Channel Switch	Model 132	751-092-9-001
Knob, Volume	Model 132	751-092-9-002
Knob, Voice Lock	Model 132	751-092-9-002
Knob, Squelch	Model 132	751-092-9-003

ITEM		PART No.
Knob, RF Gain	Model 132	751-092-9-003
Knob, Mode Switch	Model 132	751-092-9-004
Channel Indicator	Model 132	380-157-9-001

ACCESSORIES

ITEM	MFGR. PART No.	REMARKS
Microphone Assembly		(Model 135)
Microphone Assembly	502-003-9-001	(Model 132)

WIRING DATA

General-use Hook-up Wire ..... Use BELDEN No. 8530 (Solid) Available in 12 Colors
8524 (Stranded) Available in 12 Colors

Shielded Antenna Lead ..... Use BELDEN No. 8214 Lowest-loss (RG-8/U Type)
8237 Low-loss (RG-8/U)
8240 (Solid) Miniature (RG-58/U)
8259 (Stranded) Miniature (RG-58A/U)

Coiled Microphone Cable ..... Use BELDEN No. 8497 3-Conductor, 1 Shielded, for Press-to-Talk (Neoprene)
8496 3-Conductor, 1 Shielded, for Press-to-Talk (Vinyl)

Ignition Noise Suppression ..... Use BELDEN No. 7300-Series Spark-Plug Sets

Bonding Strap ..... Use BELDEN No. 8661 (3/8 In.)

For Supplier Address See PHOTOFACT Index

NOTE

ONLY THOSE PERSONS PROPERLY LICENSED ARE PERMITTED TO MAKE REPAIRS OR ADJUSTMENTS WHICH MAY RESULT IN ILLEGAL OPERATION. (REFER TO FCC RULES AND REGULATIONS PART 95, SUBPARTS C & D.)

The frequency of the transmitter should be checked periodically with a secondary frequency standard to insure proper and legal operation.

Best results will be obtained when adjusting the final RF output circuit if the antenna normally used is connected and the chassis is as nearly in the cabinet as possible.

Connect either 50-ohm dummy load or the normally used antenna system.

MODELS Rebel 23+ (Courier)
Fanfare 100 (Fanon)

ALIGNMENT INSTRUCTIONS

Suggested Alignment Tools:

	GC ELECTRONICS
L7, L9, L12, L13	#9089, 8728
T1 thru T4, T11 thru T17	#9440
T5, T6, T7, T8	#5000, 8290

RECEIVER

Connect an AC VTVM across speaker voice coil. Set squelch control fully counterclockwise. Adjust volume control for suitable reading.

SIGNAL GENERATOR	CHANNEL	ADJUST	REMARKS
Connect high side thru .01 uF to base of TR3 (2nd Mixer), low side to ground. Set to 455 kHz (Mod.).	Any	T8,T7, T6,T5	Adjust for maximum.
Connect high side thru .01 uF to antenna connector, low side to ground. Set to 27.085 MHz (Mod.).	11	T1,T2, T3,T4, T13,T14, T12	Adjust for maximum.

TRANSMITTER

INDICATOR	ADJUST	REMARKS
RF Wattmeter	T11,T15, T16,T17, L13,L12, L9	Connect Wattmeter to antenna connector. Set to Ch. 11, Key Transmitter. Adjust for maximum power output.
RF Wattmeter 0-500 DC mA meter.	L9	Connect wattmeter to antenna. Remove jumper between TP3 and TP4 in collector circuit of final (TR18). Connect DC mA meter. Set to Ch. 11, Key Transmitter. Adjust for 5 watts.
RF Wattmeter	VR6	Key transmitter and adjust so that RF meter agrees with wattmeter.
TV (Ch. 2)	L7	Adjust for MINIMUM interference.

HOWARD W. SAMS & CO., INC. Indianapolis, Indiana 46206

© 1974 Howard W Sams & Co., Inc. Printed in U. S. of America 4CY142

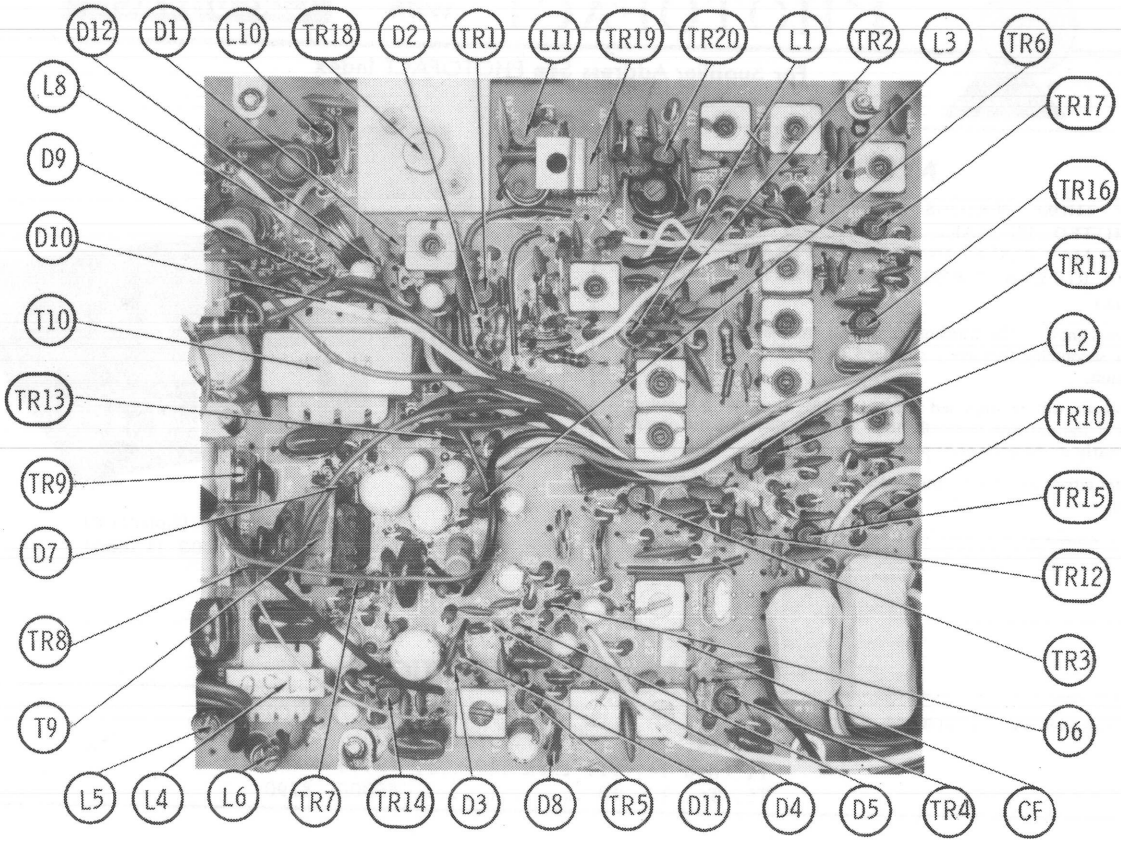
D12
D1
L10
TR18
D2
TR1
L11
TR19
TR20
L1
TR2
L3
TR6
L8
TR17
D9
TR16
D10
TR11
T10
L2
TR13
TR10
TR9
TR15
D7
TR12
TR8
TR3
T9
D6
L5
L4
L6
TR7
TR14
D3
D8
TR5
D11
D4
D5
TR4
CF

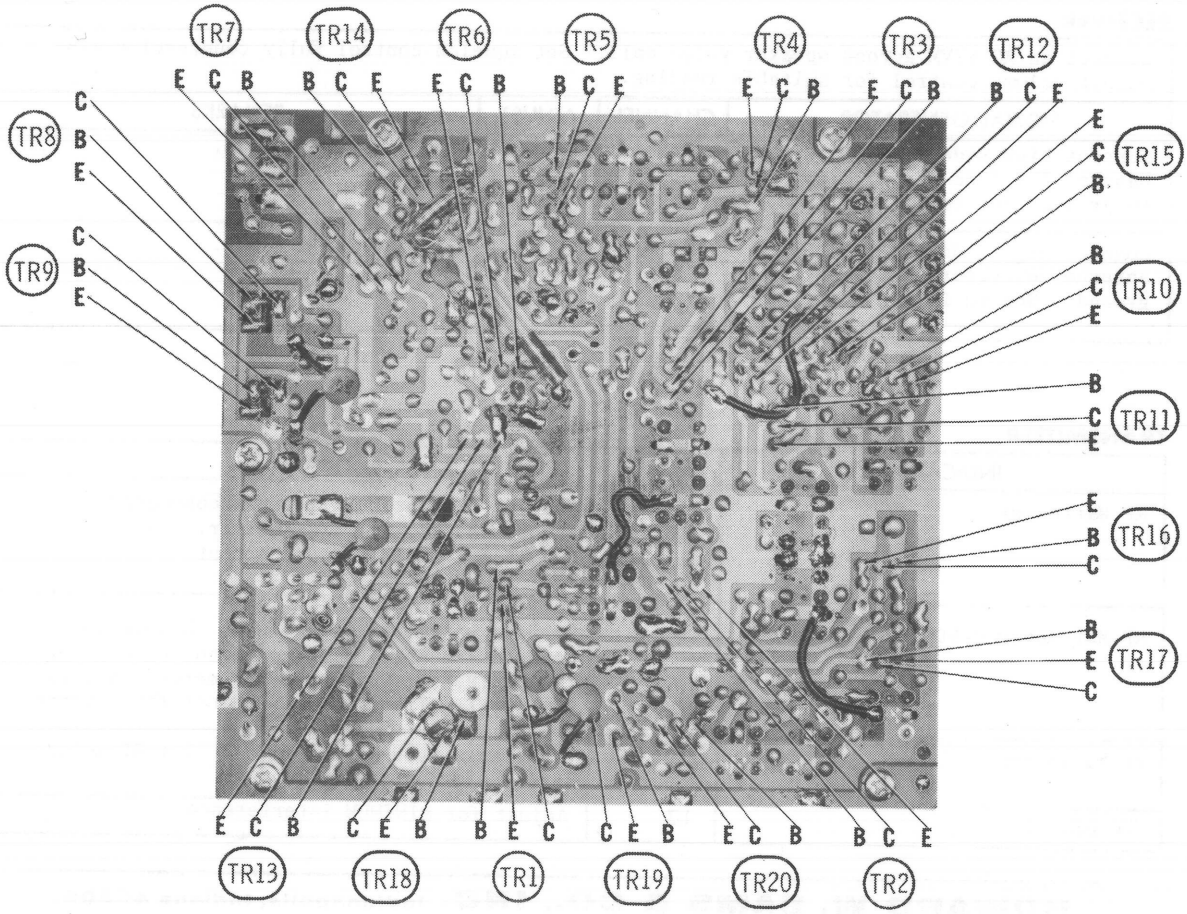
TR7
TR14
TR6
TR5
TR4
TR3
TR12
TR8
TR15
TR9
TR10
TR11
TR16
TR17
TR13
TR18
TR1
TR19
TR20
TR2

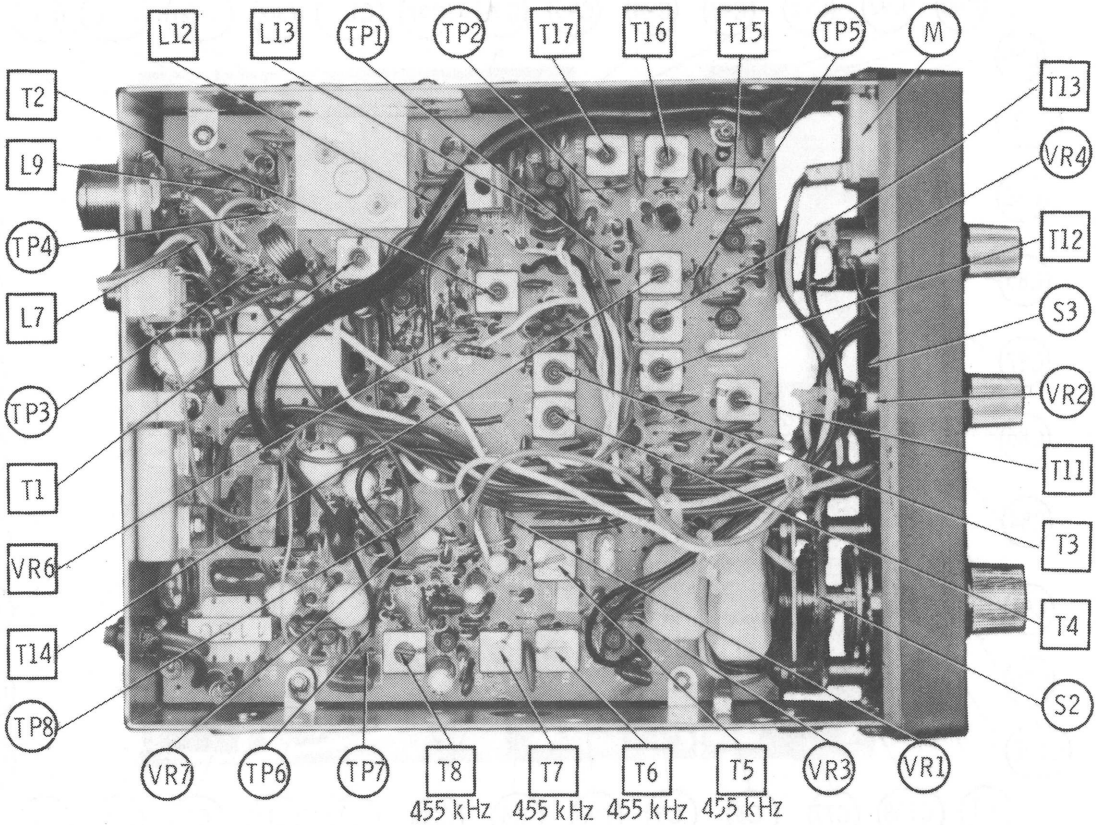

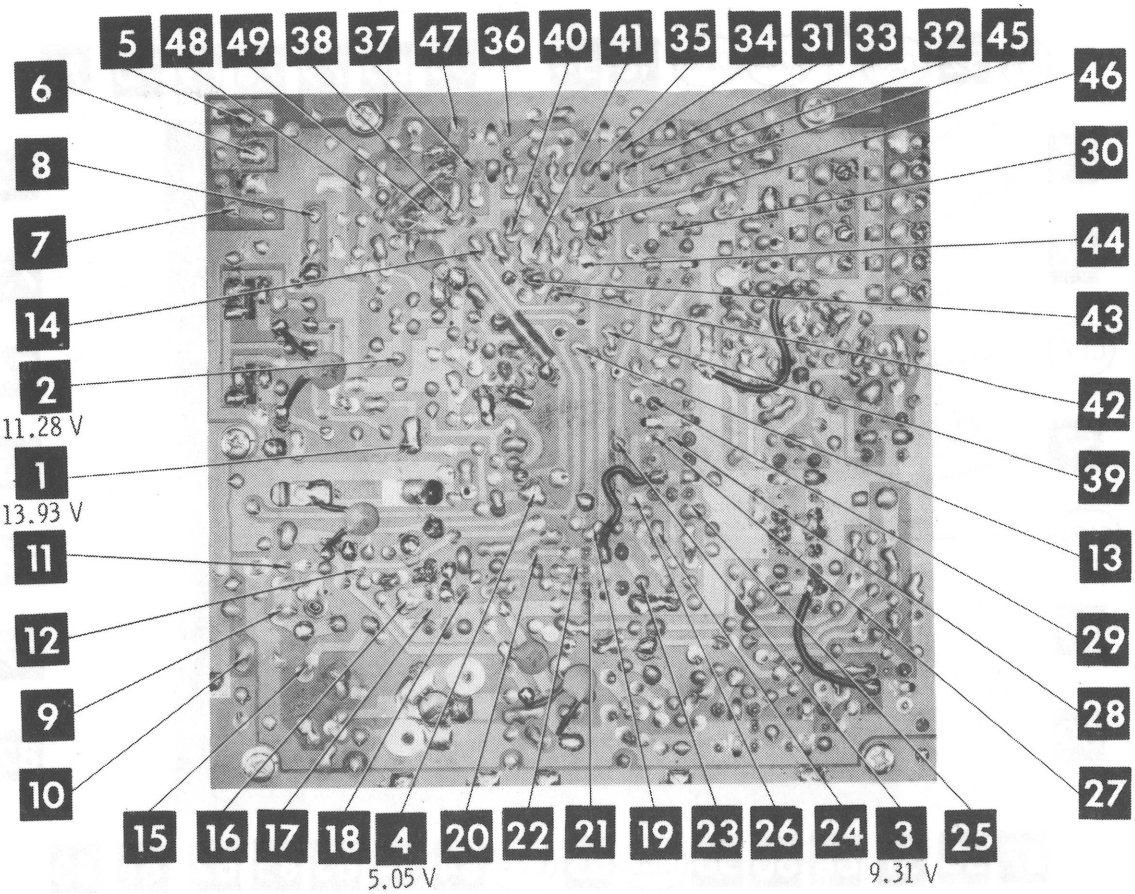

A Howard W. Sams CIRCUITRACE® Photo

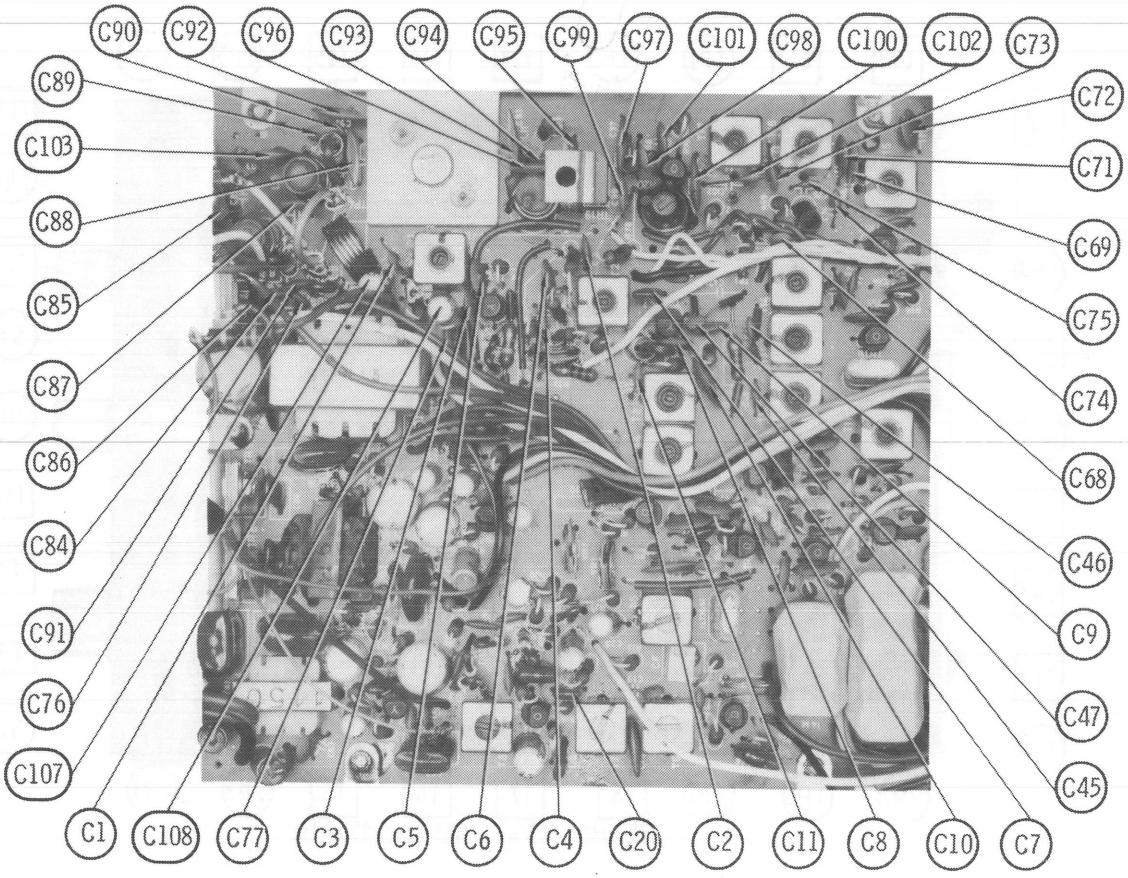

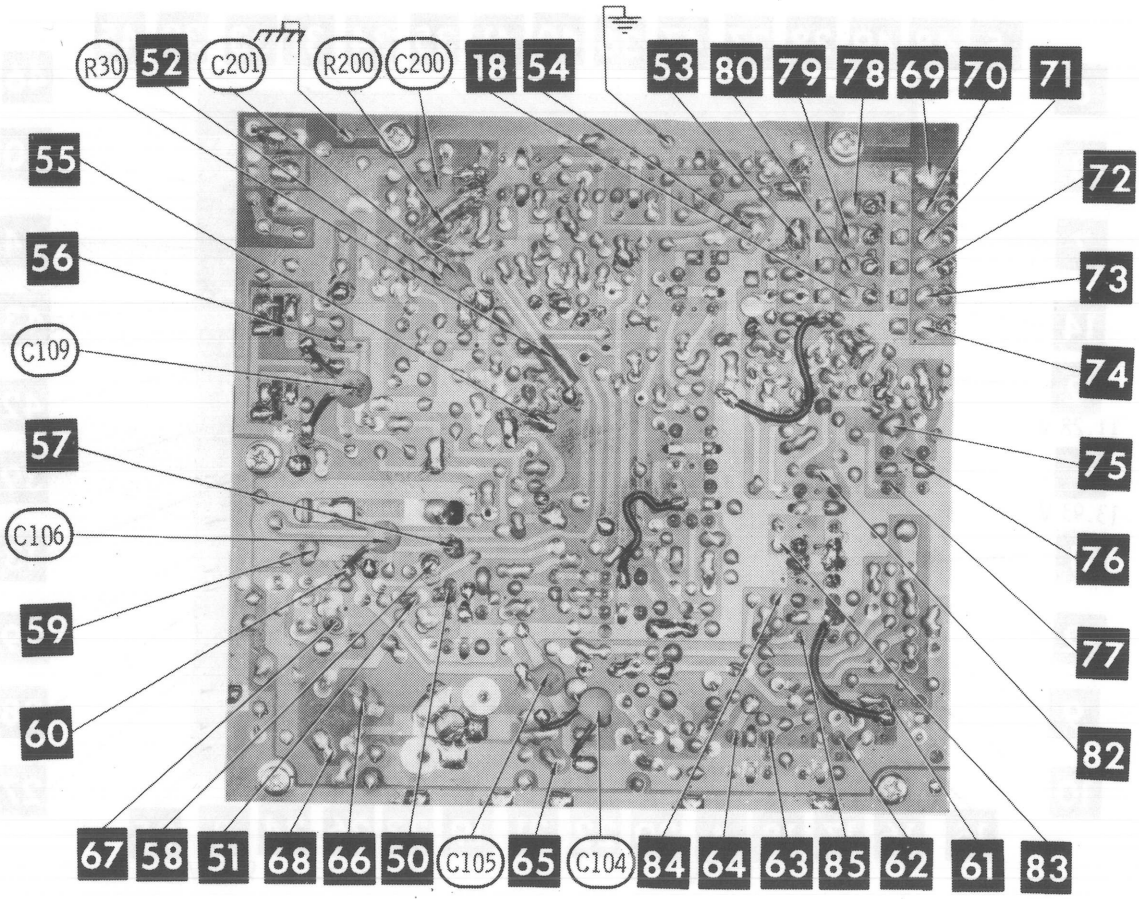

A Howard W. Sams CIRCUITRACE® Photo

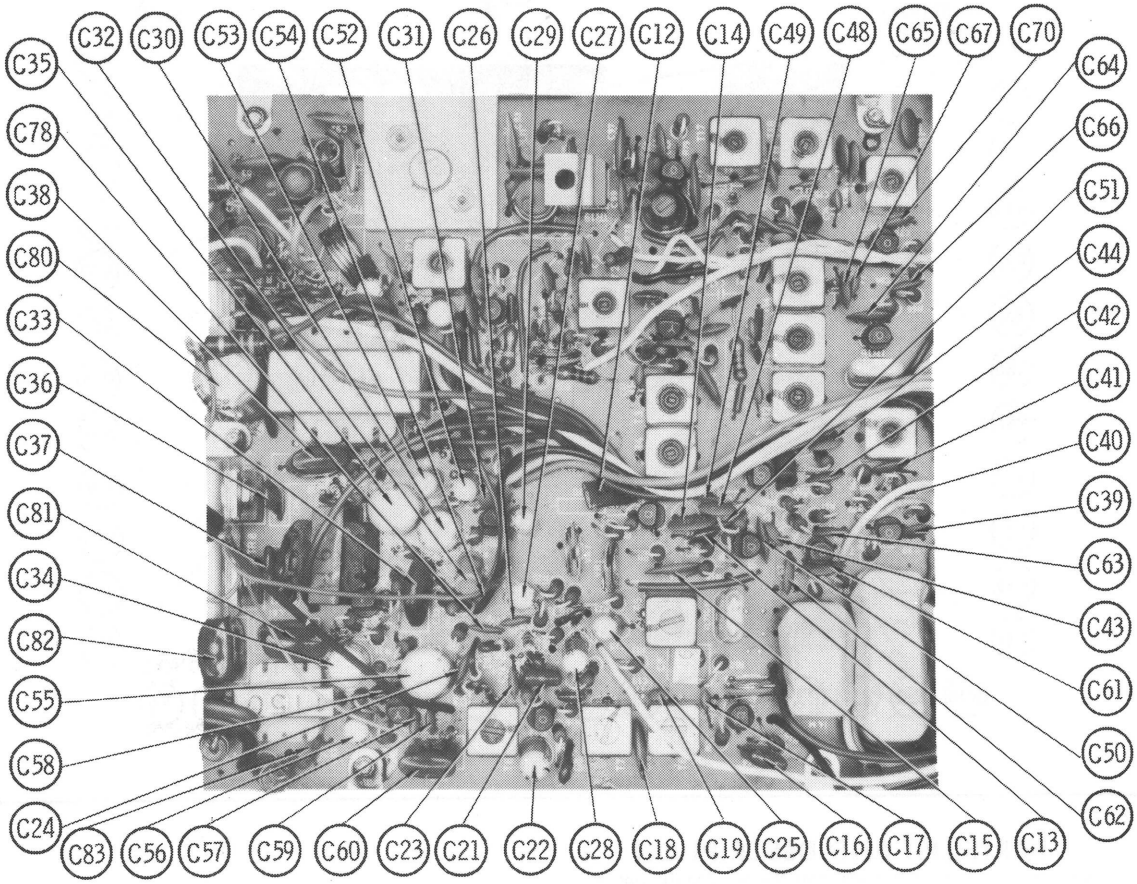
C35
C78
C38
C80
C33
C36
C37
C81
C34
C82
C55
C58
C24
C83
C56
C57
C59
C60
C23
C21
C22
C28
C18
C19
C25
C16
C17
C15
C13
C62
C50
C61
C43
C63
C39
C40
C41
C42
C44
C51
C66
C64
C32
C30
C53
C54
C52
C31
C26
C29
C27
C12
C14
C49
C48
C65
C67
C70

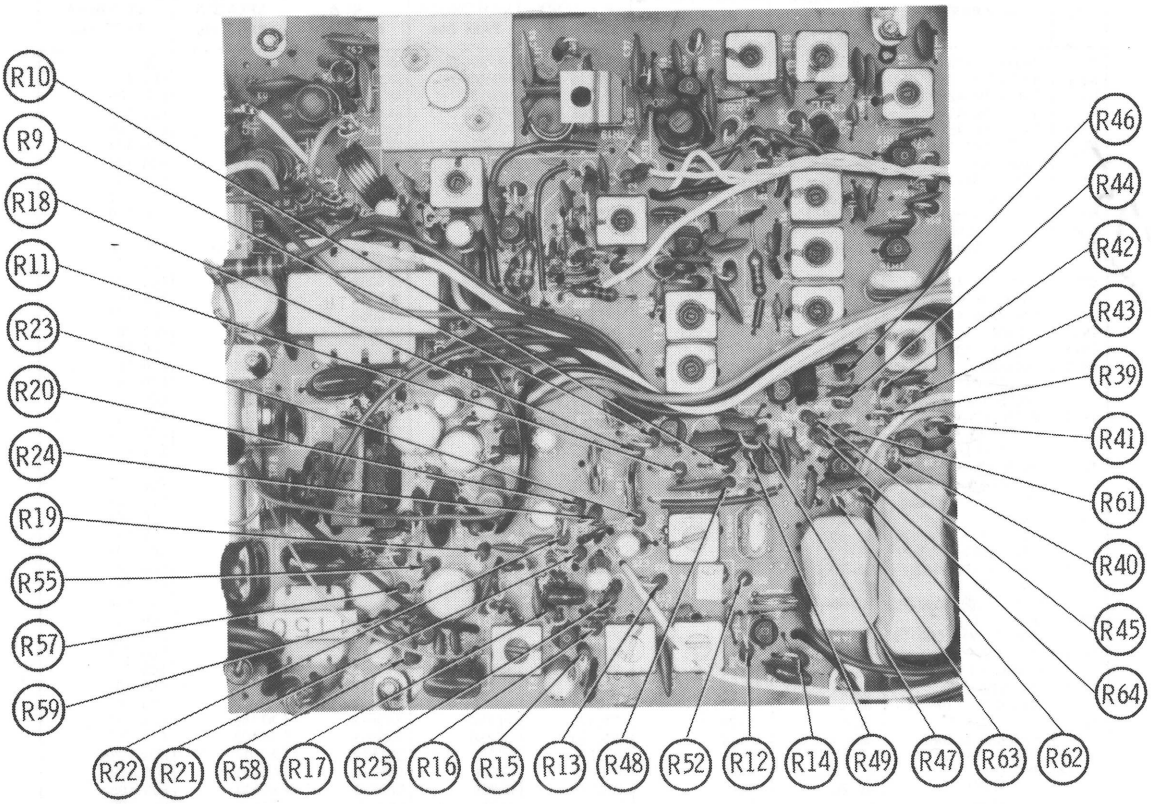
R10
R9
R18
R11
R23
R20
R24
R19
R55
R57
R59
R22
R21
R58
R17
R25
R16
R15
R13
R48
R52
R12
R14
R49
R47
R63
R62
R64
R45
R40
R61
R41
R39
R43
R42
R44
R46

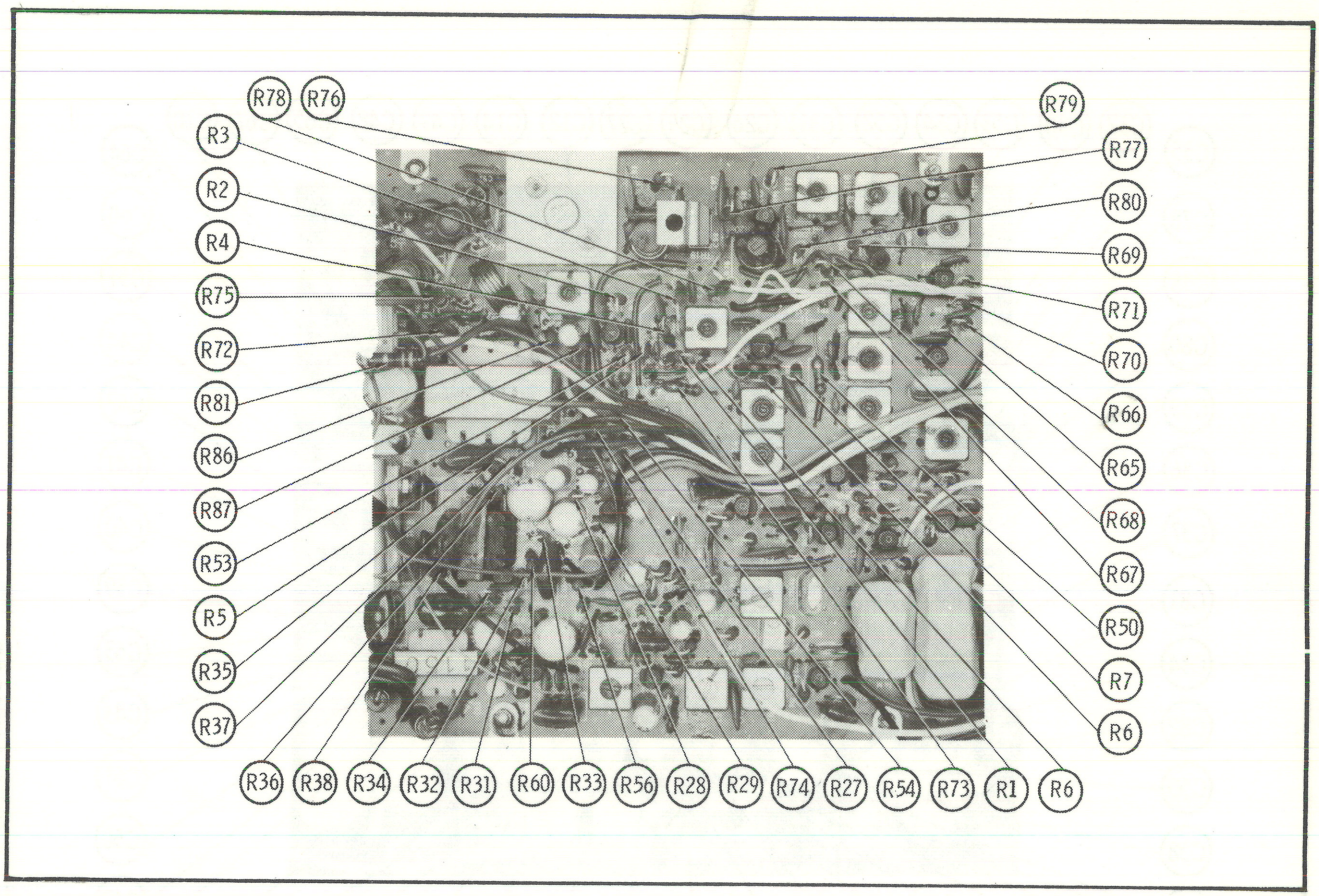

PARTS LIST AND DESCRIPTION

(When ordering parts, state Model, Part Number, and Description.)

SEMICONDUCTORS

4.7.75

ITEM No.	TYPE / MFGR. No./PART No.	REPLACEMENT DATA						
		GENERAL ELECTRIC PART No.	INTERNATIONAL RECTIFIER PART No.	MALLORY PART No.	MOTOROLA PART No.	RCA PART No.	SPRAGUE PART No.	SYLVANIA PART No.
D1	1N914/DI-20	GE-300	D200	PTC214	HEPR0602	SK3100	RT218	ECG 177
D2	1N914/DI-20	GE-300	D200	PTC214	HEPR0602	SK3100	RT218	ECG 177
D3	1N60/296-42-9	1N60	1N60	PTC206	HEP135	SK3088		ECG 109
D4	1N60/296-42-9	1N60	1N60	PTC206	HEP135	SK3088		ECG 109
D5	1N60/296-42-9	1N60	1N60	PTC206	HEP135	SK3088		ECG 109
D6	CD37/1043-10	GE-300	D200	PTC214	HEPR0602	SK3100	RT218	ECG 177
	(1N444B)	GE-300	D200	PTC214	HEPR0602	SK3100	RT218	ECG 177
D7	CE37/1043-10	GE-300	D200	PTC214	HEPR0602	SK3100	RT218	ECG 177
	(1N444B)	GE-300	D200	PTC214	HEPR0602	SK3100	RT218	ECG 177
D8	CA-092/1080-10	GEZD-9.1	Z1210	PTC505	HEPZ0412	SK3060	RT240	ECG 139
	(9.1 V ZENER)							
D9	SR1K-1/1080-08	GE-504A	8D4 or 5A4D	PTC201 or	HEPR0052	SK3030 or	RT213 or	ECG 116 or
				PTC202		SK3031	RT214	ECG 117
D10	1N60/296-42-9	1N60	1N60	PTC206	HEP135	SK3088		ECG 109
D11	1N60/296-42-9	1N60	1N60	PTC206	HEP135	SK3088		ECG 109
D12	1N60/296-42-9	1N60	1N60	PTC206	HEP135	SK3088		ECG 109
TR-1	2SC394Y/1080-01	GE-17	TR-33	PTC139	HEP53	SK3018	RT108	ECG 107
TR-2	2SC394Y/1080-01	GE-17	TR-33	PTC139	HEP53	SK3018	RT108	ECG 107
TR-3	2SC3800	GE-61	TR-24	PTC121	HEP56	SK3018	RT108	ECG 107
	(2SC3720)	GE-61	TR-24	PTC121	HEP56	SK3018	RT108	ECG 107
	(2SC829F/1080-20	GE-61	TR-24	PTC121	HEP56	SK3018	RT108	ECG 107
TR-4	2SC3800	GE-61	TR-24	PTC121	HEP56	SK3018	RT108	ECG 107
	(2SC3720)	GE-61	TR-24	PTC121	HEP56	SK3018	RT108	ECG 107
	(2SC839F)/1080-20	GE-61	TR-24	PTC121	HEP56	SK3018	RT108	ECG 107
TR-5	2SC3800	GE-61	TR-24	PTC121	HEP56	SK3018	RT108	ECG 107
	(2SC3720)	GE-61	TR-24	PTC121	HEP56	SK3018	RT108	ECG 107
	(2SC839F)/1080-20	GE-61	TR-24	PTC121	HEP56	SK3018	RT108	ECG 107
TR-6	2SC380Y	GE-61	TR-24	PTC123	HEP56	SK3039	RT108	ECG 108
	(2SC372Y)	GE-20	TR-24	PTC123	HEP56	SK3039	RT108	ECG 108
	(2SC395R)/1080-21	GE-20	TR-24	PTC123	HEP56	SK3039	RT108	ECG 108
TR-7	2SC733Y/1080-03	GE-20	TR-24	PTC123	HEP729	SK3122	RT100	ECG 123A
TR-8	2SC1173Y	GE-28		PTC110	HEPS3023	SK3054	RT154	ECG 152
	(2SC1173O)/1080-130	GE-28		PTC110	HEPS3023	SK3054	RT154	ECG 152
TR-9	2SC1173Y	GE-28		PTC110	HEPS3023	SK3054	RT154	ECG 152
	(2SC1173O)/1080-130	GE-28		PTC110	HEPS3023	SK3054	RT154	ECG 152
TR-10	2SC3720	GE-61	TR-24	PTC121	HEP56	SK3018	RT108	ECG 107
	(2SC839F)/1080-20	GE-61	TR-24	PTC121	HEP56	SK3018	RT108	ECG 107
TR-11	2SC3720	GE-61	TR-24	PTC121	HEP56	SK3018	RT108	ECG 107
	(2SC839F)/1080-20	GE-61	TR-24	PTC121	HEP56	SK3018	RT108	ECG 107
TR-12	2SC3720	GE-61	TR-24	PTC121	HEP56	SK3018	RT108	ECG 107
	(2SC839F)/1080-20	GE-61	TR-24	PTC121	HEP56	SK3018	RT108	ECG 107
TR-13	2SC373/296-98-9	GE-20	TR-21	PTC101	HEP55	SK3122	RT107	ECG 123A
TR-14	2SC380Y	GE-20	TR-24	PTC123	HEP56	SK3039	RT108	ECG 108
	(2SC372Y)	GE-20	TR-24	PTC123	HEP56	SK3039	RT108	ECG 108
	(2SC945R)/1080-21	GE-20	TR-24	PTC123	HEP56	SK3039	RT108	ECG 108
TR-15	2SC3720	GE-61	TR-24	PTC121	HEP56	SK3018	RT108	ECG 107
TR-16	2SC3720	GE-61	TR-24	PTC121	HEP56	SK3018	RT108	ECG 107
TR-17	2SC3720	GE-61	TR-24	PTC121	HEP56	SK3018	RT108	ECG 107

(CONTINUED ON PAGE 60)

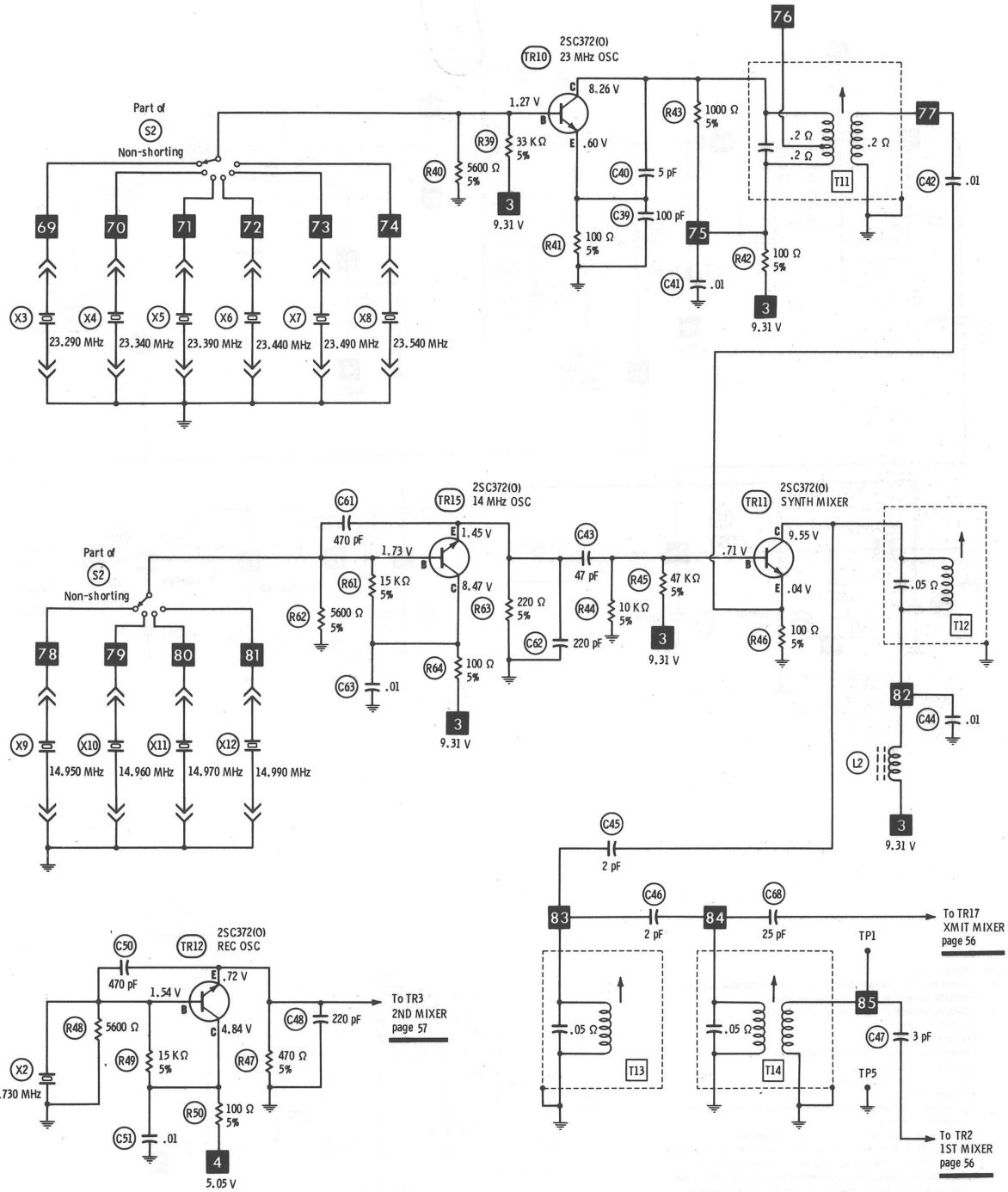

Chan	Crystal Complement		Chan	Crystal Complement		Chan	Crystal Complement		Chan	Crystal Complement	
1	X3	X9	7	X4	X11	13	X6	X9	19	X7	X11
2	X3	X10	8	X4	X12	14	X6	X10	20	X7	X12
3	X3	X11	9	X5	X9	15	X6	X11	21	X8	X9
4	X3	X12	10	X5	X10	16	X6	X12	22	X8	X10
5	X4	X9	11	X5	X11	17	X7	X9			
6	X4	X10	12	X5	X12	18	X7	X10	23	X8	X12

Terminal Guide

TR10, TR11
TR12, TR15

A PHOTOFACT STANDARD NOTATION SCHEMATIC
with CIRCUITRACE™

© Howard W. Sams & Co., Inc. 1974

COURIER/FANON MODELS REBEL-23+/FANFARE 100

SEE NOTES ON PAGE 56

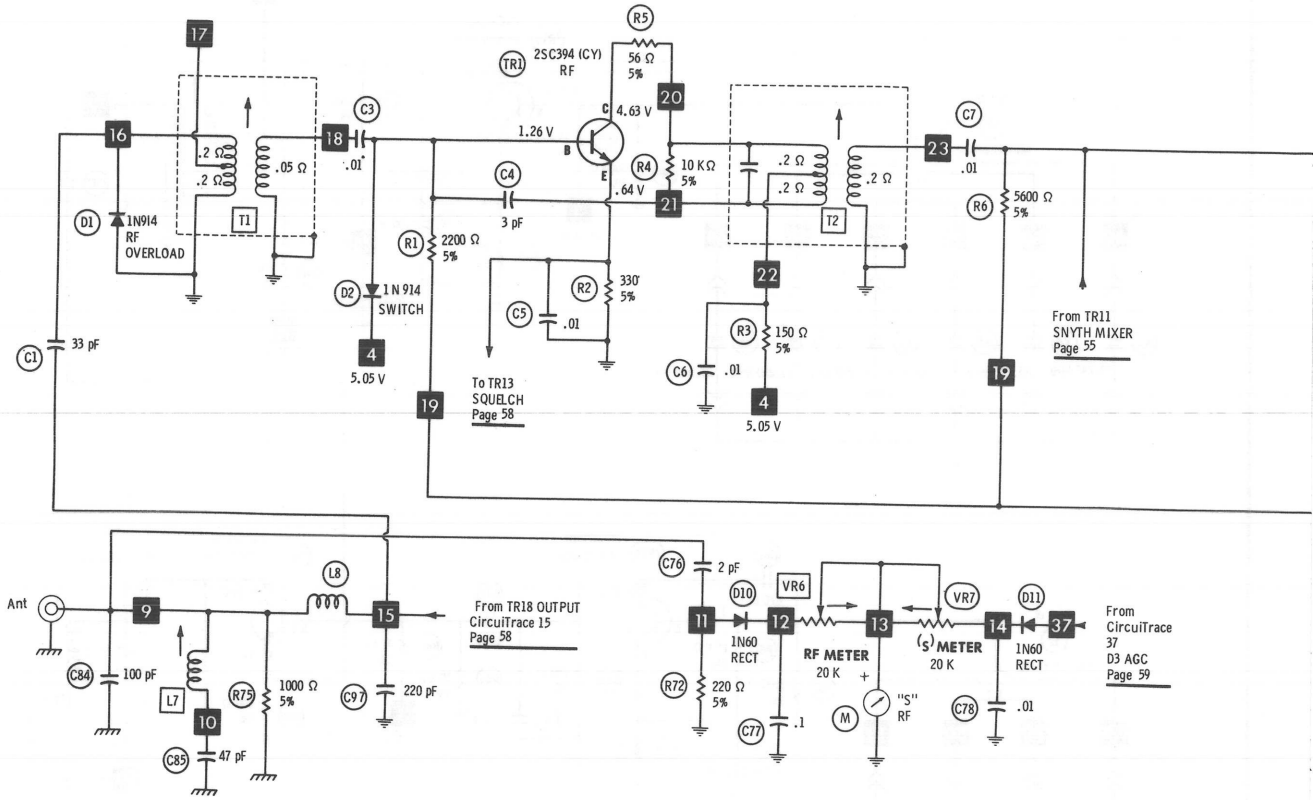

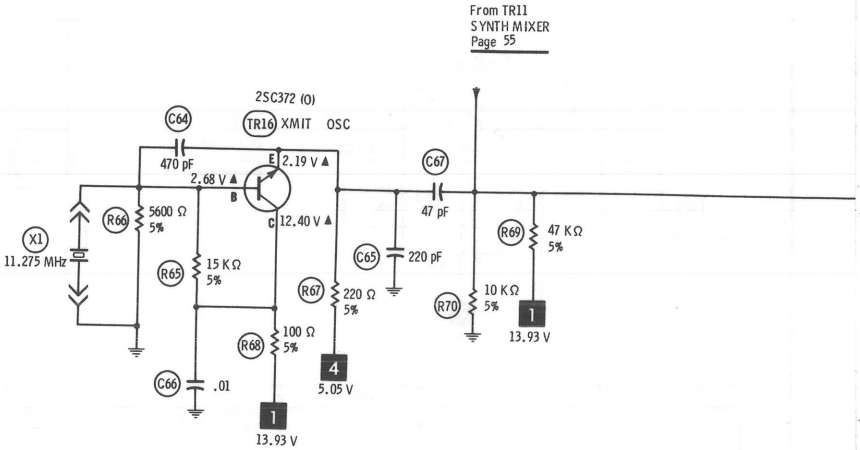

Denotes chassis.
Denotes ground. (Voltage reference unless otherwise indicated)
Indicates connection used in some versions.
Indicates connection not used in some versions.
* Omitted in some versions.
⊖ See parts list.
※ Value varies; replace with original value.
▲ Measured in transmit position.
● Measured with unit squelched.
NC No Connection.

Measurements taken with switching in position shown unless otherwise indicated.
Values shown in ( ) are used in some applications.
Resistors are 1/2W or less, 10% or 20%, unless otherwise indicated.
Supply voltage maintained at rated value for measurements.
Voltage and resistance measured with VTVM or equivalent meter, no signal applied and controls adjusted for normal operation.
Arrow on control indicates direction of advance.
Numbers assigned to terminals may not be found on the unit.
Transistor resistances vary widely; no resistance measurements taken.

A PHOTOFACT STANDARD NOTATION SCHEMATIC
with CIRCUITRACE™

© Howard W. Sams & Co., Inc. 1974

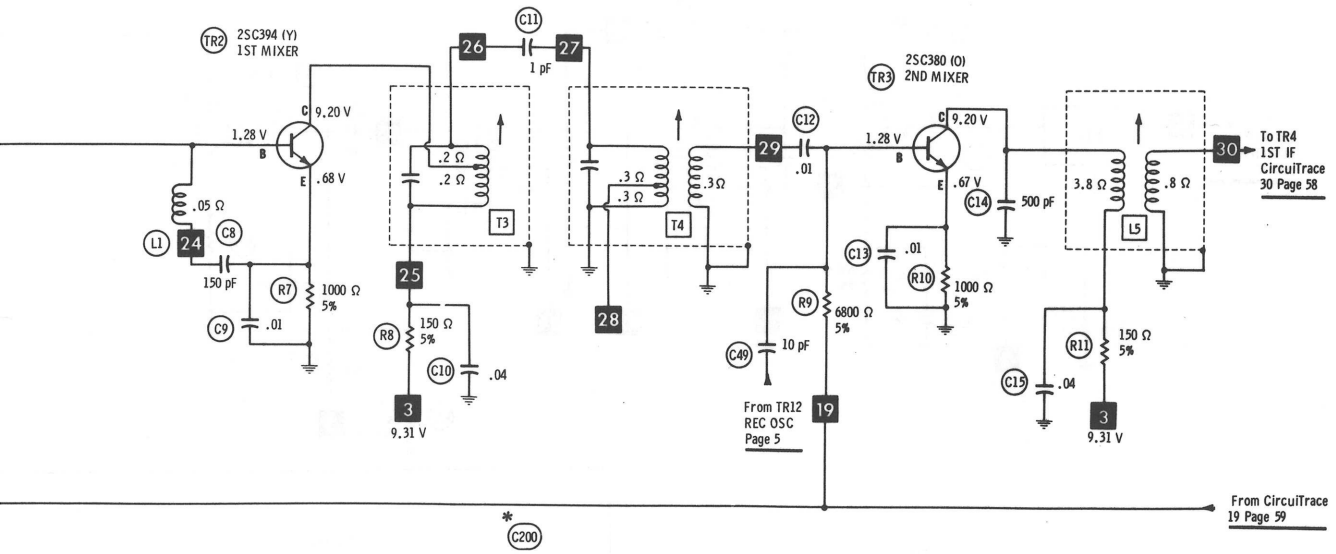

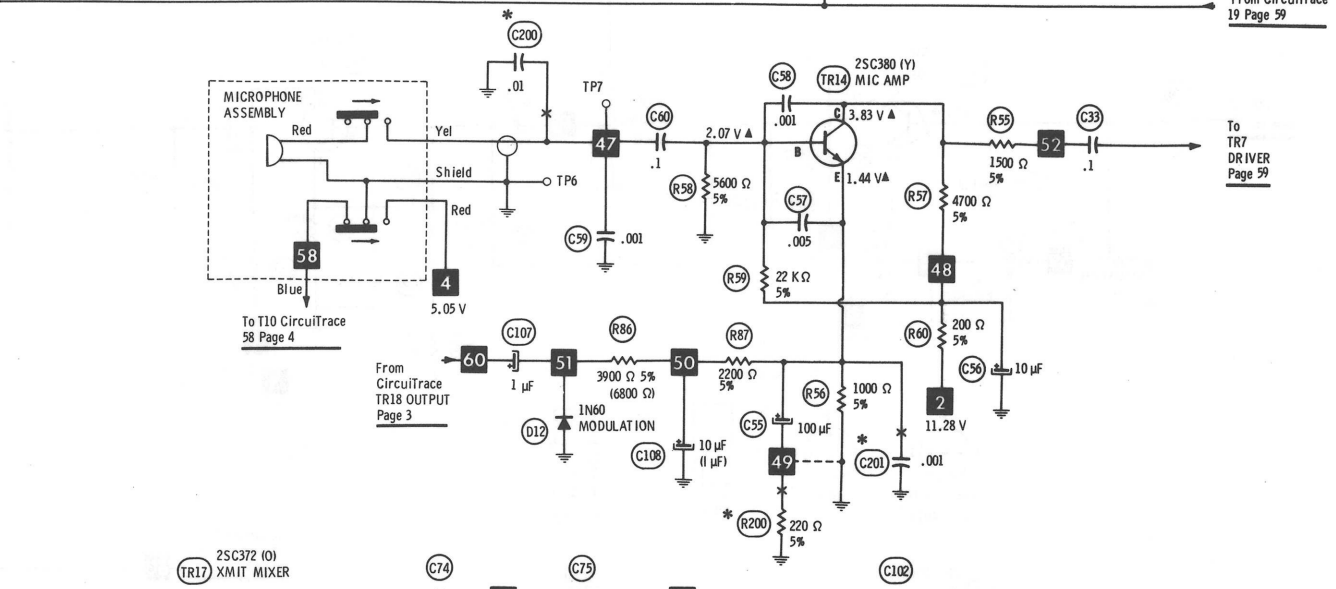

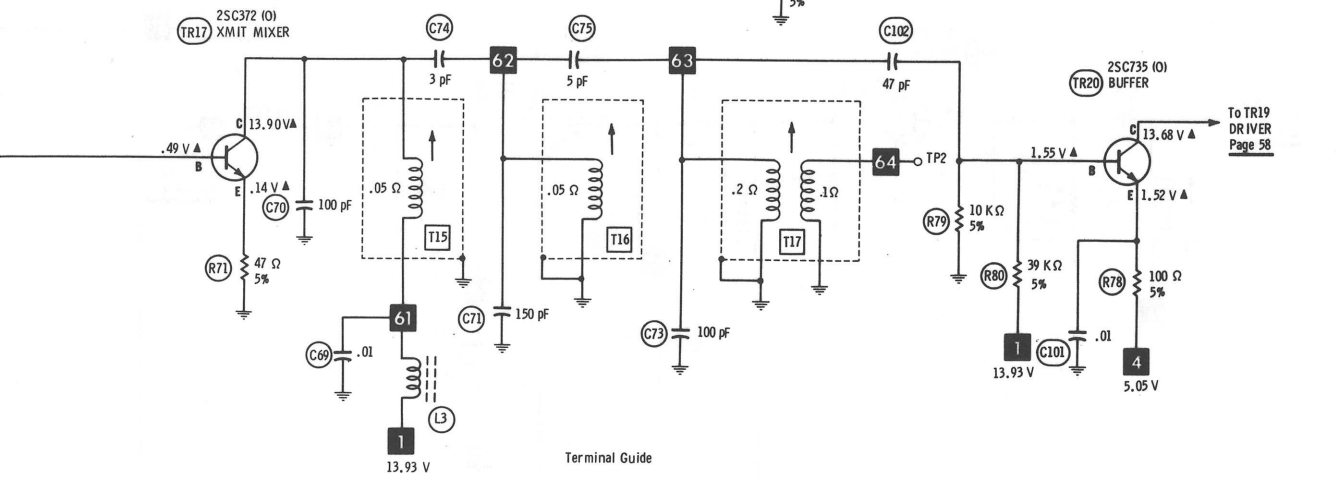

Terminal Guide

TR1, TR2, TR3, TR14, TR16, TR16

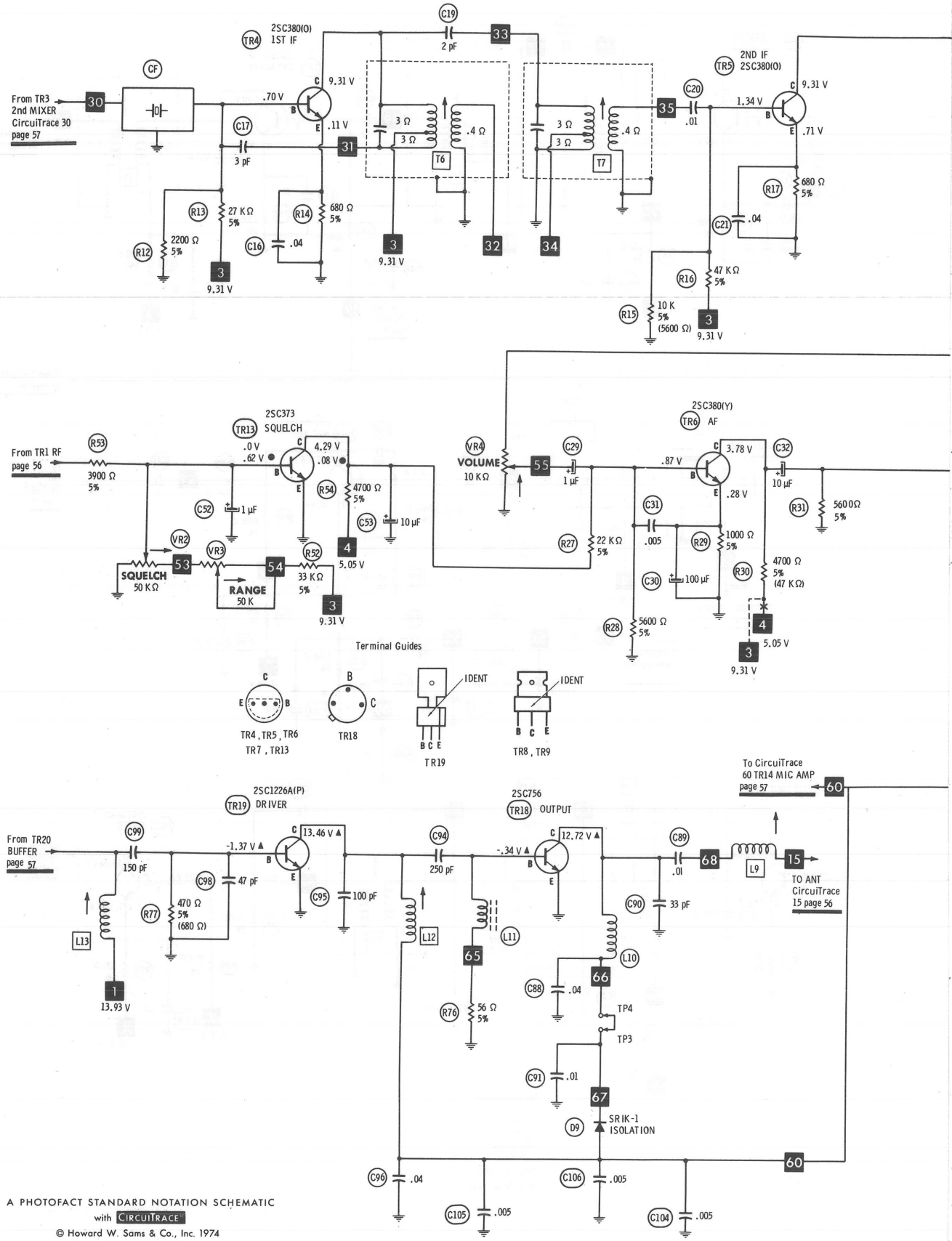

A PHOTOFACT STANDARD NOTATION SCHEMATIC
with CIRCUITRACE

© Howard W. Sams & Co., Inc. 1974

SEE NOTES ON PAGE 56

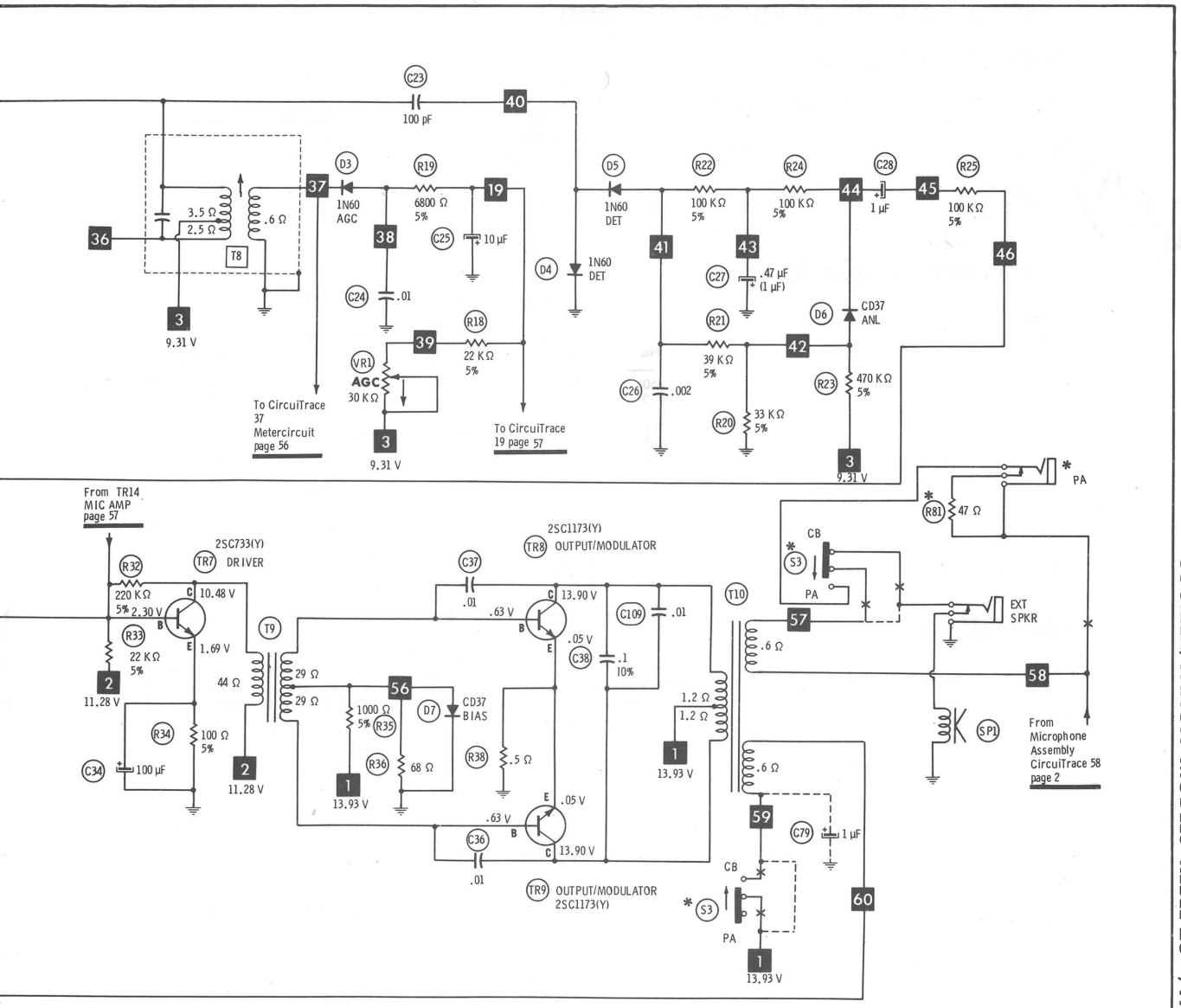

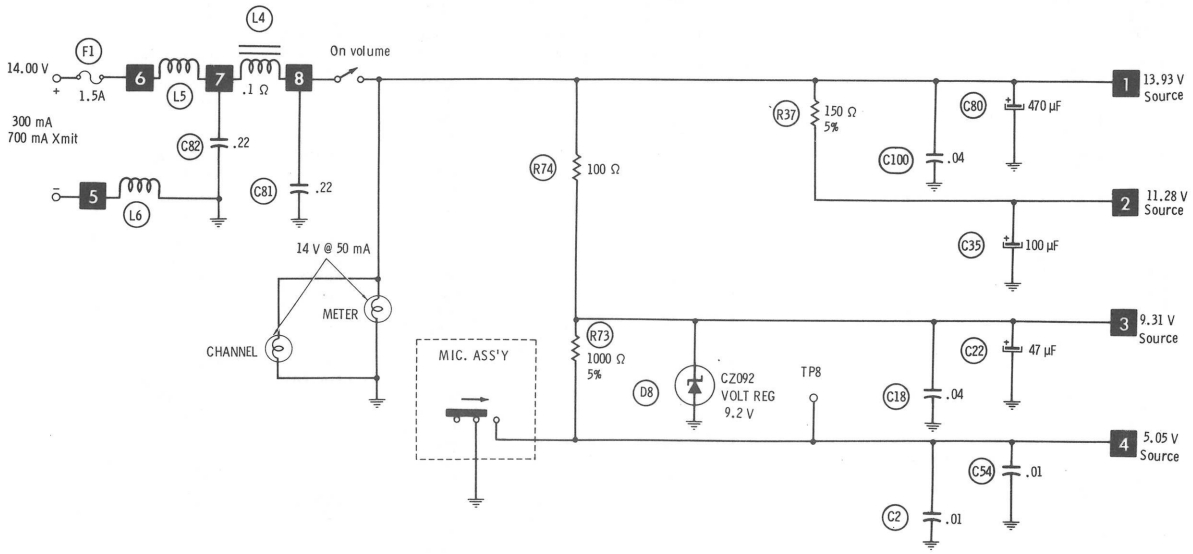

COURIER/FANON MODELS REBEL-23+/FANFARE 100

PARTS LIST AND DESCRIPTION (CONTINUED)

(When ordering parts, state Model, Part Number, and Description.)

SEMICONDUCTORS (cont)

ITEM No.	TYPE / MFGR. No. / PART No.	REPLACEMENT DATA						
		GENERAL ELECTRIC PART No.	INTERNATIONAL RECTIFIER PART No.	MALLORY PART No.	MOTOROLA PART No.	RCA PART No.	SPRAGUE PART No.	SYLVANIA PART No.
TR-18	2SC756					SK3049		ECG 224
	(2SC756-2-4)/					SK3049		ECG 224
	1080-05							
TR-19	2SC1226P/	GE-28	TR-55	PTC110	HEPS3023	SK3054	RT154	ECG 186
	1080-06							
	(2SC1226A)	GE-28	TR-55	PTC110	HEPS3023	SK3054	RT154	ECG 186
TR-20	2SC735~~0~~	GE-17	TR-24	PTC123	HEP53	SK3124	RT102	ECG 123A

4-7-75

ELECTROLYTIC CAPACITORS

ITEM No.	RATING		REPLACEMENT DATA					
			MFGR. PART No.	ARCO PART No.	CENTRALAB PART No.	CORNELL-DUBILIER PART No.	MALLORY PART No.	SPRAGUE PART No.
C22	47	10 V	1080-59	RME-D-D-050	EP15-50	PC50-10	MTV50CB15	EV-1226
C25	10	16 V		RME-B-E-010	EP15-10	PC10-25	VTT10A25	EV-1222
C27	.47	50 V					TDC474M05EL	
C28	1	50 V		RME-A-J-001	EP50-1	PC1-50	MTV1CB50	EV-1615
C29	1	50 V		RME-A-J-001	EP50-1	PC1-50	MTV1CB50	EV-1615
C30	100	10 V	1080-60	RME-E-D-100	EP15-100	PC100-10	MTV100CB10	EV-1130
C32	10	16 V		RME-B-E-010	EP15-10	PC10-25	VTT10A25	EV-1222
C34	100	10 V	1080-60	RME-E-D-100	EP15-100	PC100-10	MTV100CB10	EV-1130
C35	100	16 V	1042-127	RME-E-E-100	EP15-100	PC100-16	MTV100CD15	EV-1230
C52	1	50 V		RME-A-J-001	EP50-1	PC1-50	MTV1CB50	EV-1615
C53	10	16 V		RME-B-E-010	EP15-10	PC10-25	VTT10A25	EV-1222
C55	100	16 V	1042-127	RME-E-E-100	EP15-100	PC100-16	MTV100CD15	EV-1230
C56	10	16 V		RME-B-E-010	EP15-10	PC10-25	VTT10A25	EV-1222
C80	470	16 V	1042-124	RME-L-E-500	EP15-500	PC500-16	MTV500DN15	EV-1250
C107	1	50 V		RME-A-J-001	EP50-1	PC1-50	MTV1CB50	EV-1615
C108	10	16 V		RME-B-E-010	EP15-10	PC10-25	VTT10A25	EV-1222

CAPACITORS

ITEM No.	RATING		MFGR. PART No.	REPLACEMENT DATA				
				ARCO/ELMENCO PART No.	CENTRALAB PART No.	CORNELL-DUBILIER PART No.	MALLORY PART No.	SPRAGUE PART No.
C1	33	10%		CCTO-330	DTZ-33	NPO33	CNO433	10TCC-Q33
C2	.01			CCD-103	CK-103	MGPO1	TA110	TG-S10
C3	.01			CCD-103	CK-103	MGPO1	TA110	TG-S10
C4	3	±.25						10TCC-V30
C5	.01			CCD-103	CK-103	MGPO1	TA110	TG-S10
C6	.01			CCD-103	CK-103	MGPO1	TA110	TG-S10
C7	.01	10%		1DP-1-103	CPR-10000J	DPMS6S1	EWF1A110	225P10391WD3
C8	150	10%		CCD-151	DD-151	GP150	GP315	10TS-T15
C9	.01			CCD-103	CK-103	MGPO1	TA110	TG-S10
C10	.04				DD-403		GP140	
C11	1	±.25					CNO510	10TCC-V10
C12	.01	10%		1DP-1-103	CPR-10000J	DPMS6S1	EWF1A110	225P10391WD3
C13	.01	10%		1DP-1-103	CPR-10000J	DPMS6S1	EWF1A110	225P10391WD3
C14	500	10%		CCD-501	DD-501	GP500	GP350	10TS-T50
C15	.04				DD-403		GP140	
C16	.04				DD-403		GP140	
C17	3	±.25						10TCC-V30
C18	.04				DD-403		GP140	
C19	2	±.25			DTZ-2R2	NPO2P2	CNO522	10TCC-V22
C20	.01			1DP-1-103	CPR-10000J	DPMS6S1	EWF1A110	225P10391WD3
C21	.04				DD-403		GP140	
C23	100	10%		CCTO-101	DTZ-100	NPO100	CNO310	10TCC-T10
C24	.01			CCD-103	CK-103	MGPO1	TA110	TG-S10
C26	.002			CCD-202	DD-202	GP2000	GP220	2SS-D20
C31	.005			CCD-502	CK-502	MGPO05	TA250	TG-D50
C33	.1	10%		1DP-2-104		DPMS2P1	EWF1A010	225P10491WD3
C36	.01	10%		1DP-1-103	CPR-10000J	DPMS6S1	EWF1A110	225P10391WD3
C37	.01	10%		1DP-1-103	CPR-10000J	DPMS6S1	EWF1A110	225P10391WD3
C38	.1	10%		1DP-2-104		DPMS2P1	EWF1A010	225P10491WD3
C39	100	10%		CCTO-101	DTZ-100	NPO100	CNO310	10TCC-T10
C40	5	±.25				NPO5		10TCC-V50
C41	.01			CCD-103	CK-103	MGPO1	TA110	TG-S10
C42	.01			CCD-103	CK-103	MGPO1	TA110	TG-S10
C43	47	10%		CCTO-470	DTZ-47	NPO47	CNO447	10TCC-Q47
C44	.01			CCD-103	CK-103	MGPO1	TA110	TG-S10
C45	2	±.25			DTZ-2R2	NPO2P2	CNO522	10TCC-V22
C46	2	±.25			DTZ-2R2	NPO2P2	CNO522	10TCC-V22
C47	3	±.25						10TCC-V30
C48	220	10%		CCD-221	DD-221	GP220	GP322	10TS-T22
C49	10	10%		CCTO-100	DTZ-10	NPO10	CNO410	10TCC-Q10
C50	470	10%		CCD-471	DD-471	GP470	GP347	10TS-T47
C51	.01			CCD-103	CK-103	MGPO1	TA110	TG-S10
C54	.01			CCD-103	CK-103	MGPO1	TA110	TG-S10
C57	.005			CCD-502	CK-502	MGPO05	TA250	TG-D50
C58	.001			6DP-1-102	CPR-1000J	DPMS6D1	EWF1A210	225P10291WD3
C59	.001			CCD-102	DD-102	GP1000	SM210	2SS-D10
C60	.1			1DP-2-104		DPMS2P1	EWF1A010	225P10491WD3
C61	470	10%		CCD-471	DD-471	GP470	GP347	10TS-T47
C62	220	10%		CCD-221	DD-221	GP220	GP322	10TS-T22
C63	.01			CCD-103	CK-103	MGPO1	TA110	TG-S10
C64	470	10%		CCD-471	DD-471	GP470	GP347	10TS-T47
C65	220	10%		CCD-221	DD-221	GP220	GP322	10TS-T22
C66	.01			CCD-103	CK-103	MGPO1	TA110	TG-S10
C67	47	10%		CCTO-470	DTZ-47	NPO47	CNO447	10TCC-Q47
C68	25	10%			DTZ-25		CNO425	10TCC-Q25
C69	.01			CCD-103	CK-103	MGPO1	TA110	TG-S10
C70	100	10%		CCTO-101	DTZ-100	NPO100	CNO310	10TCC-T10
C71	150	10%		CCD-151	DD-151	GP150	GP315	10TS-T15
C72	.01			CCD-103	CK-103	MGPO1	TA110	TG-S10
C73	100	10%		CCTO-101	DTZ-100	NPO100	CNO310	10TCC-T10
C74	3	+.25						10TCC-V30

PARTS LIST AND DESCRIPTION (CONTINUED)

(When ordering parts, state Model, Part Number, and Description.)

CAPACITORS (cont)

ITEM No.	RATING		MFGR. PART No.	REPLACEMENT DATA				
				ARCO/ELMENCO PART No.	CENTRALAB PART No.	CORNELL-DUBILIER PART No.	MALLORY PART No.	SPRAGUE PART No.
C75	5	±.25				NP05		10TCC-V50
C76	2	±.25			DTZ-2R2	NP02P2	CN0522	10TCC-V22
C77	.1				CK-104		TA010	TG-P10
C78	.01			CCD-103	CK-103	MGP01	TA110	TG-S10
C81	.22			4DP-5-224		DPMS4P22	EWF4022	4PS-P22
C82	.22			4DP-5-224		DPMS4P22	EWF4022	4PS-P22
C83	.01			CCD-103	CK-103	MGP01	TA110	TG-S10
C84	100	10%		CCT0-101	DTZ-100	NP0100	CN0310	10TCC-T10
C85	47	10%		CCT0-470	DTZ-47	NP047	CN0447	10TCC-Q47
C86	.04				DD-403		GP140	
C87	220	10%		CCD-221	DD-221	GP220	GP322	10TS-T22
C88	.04				DD-403		GP140	
C89	.01			CCD-103	CK-103	MGP01	TA110	TG-S10
C90	33	10%		CCT0-330	DTZ-33	NP033	CN0433	10TCC-Q33
C91	.01			CCD-103	CK-103	MGP01	TA110	TG-S10
C92	.04				DD-403		GP140	
C93	.04				DD-403		GP140	
C94	250	10%		CCD-270	DD-271	GP270	GP327	10TS-T27
C95	100	10%		CCT0-101	DTZ-100	NP0100	CN0310	10TCC-T10
C96	.04				DD-403		GP140	
C97	.04				DD-403		GP140	
C98	47	10%		CCT0-470	DTZ-47	NP047	CN0447	10TCC-Q47
C99	150	10%		CCD-151	DD-151	GP150	GP315	10TS-T15
C100	.04				DD-403		GP140	
C101	.01			CCD-103	CK-103	MGP01	TA110	TG-S10
C102	47	10%		CCT0-470	DTZ-47	NP047	CN0447	10TCC-Q47
C103	.04				DD-403		GP140	
C104	.005			CCD-502	CK-502	MGP005	TA250	TG-D50
C105	.005			CCD-502	CK-502	MGP005	TA250	TG-D50
C106	.005			CCD-502	CK-502	MGP005	TA250	TG-D50
C109	.01			CCD-103	CK-103	MGP01	TA110	TG-S10

CONTROLS (All wattages 1/2 watt, or less, unless listed)

ITEM No.	FUNCTION	RESIST-ANCE	REPLACEMENT DATA				
			MFGR. PART No.	CENTRALAB PART No.	CLAROSTAT PART No.	CTS—IRC PART No.	MALLORY PART No.
VR1	AGC	30 K	1070-19	TSV-50K (2) or T-50K (2)	C-503 (2)	X201R503B (2)	MTC54L1 (2)
VR2	Squelch	50 K	1080-31				
VR3	Range	50 K	1080-32	TSV-50K (2) or T-50K (2)	C-503 (2)	X201R503B (2)	MTC54L1 (2)
VR4	Volume/Switch	10 K	1080-29				
VR6	R.F. Meter	20 K	1042-97	T-20K (2) or TSV-25K (2)	C-253 (2)	X201R253B (2)	MTC24L1 (2)
VR7	"S" Meter	20 K	1042-97	T-20K (2) or TSV-25K (2)	C-253 (2)	X201R253B (2)	MTC24L1 (2)

(2) Cut off one of the end terminals and bend to fit PC board.

RESISTORS (Power and Special)

ITEM No.	RATING	REPLACEMENT DATA	
		WORKMAN PART No.	MFGR. PART No.
R38	.5 (1W Film)		

ITEM No.	RATING	REPLACEMENT DATA	
		WORKMAN PART No.	MFGR. PART No.

PER Miller 8-29-74

COILS (RF-IF)

ITEM No.	USE	REPLACEMENT DATA			
		PART No.	MEISSNER PART No.	MILLER PART No.	REMARKS
L1	Trap	1080-25 (TC-71096) (1)			(1) Number on unit; when ordering include both numbers.
L2	RF Choke	1080-27 (LF4-2R2K2) (1)		74F226AP	
L3	RF Choke	1080-27 (LF4-2R2K1) (1)			
L5	RF Choke	1080-26 (TC-71095) (1)	19-2009	4602	
L6	RF Choke	1080-26 (TC-71095) (1)	19-2009	4602	
L7	TV1 Trap	1080-21 (TC-71024) (1)			
L8	Ant Filter	1043-26 (NS-1344) (1)			
L9	Xmit Match	1045-24 (TC-71025) (1)			
L10	Xmit Final	1080-22 (TC-71029) (1)			
L11	RF Choke	1080-27 (LF4-2R2K) (1)		74F226AP	
L12	Xmit Driver	1080-23 (TC-71023) (1)			
L13	Xmit Amp	1080-24 (TC-71026) (1)			
T1	Rec Ant	1080-11 (TKXN-22160BU) (1)			
T2	RF Amp	1080-12 (TKXN-22534BU) (1)			
T3	1st IF	1080-13 (TKAC-22536IE) (1)			
T4	1st IF	1080-14 (TKAC-21165A) (1)			
T5	2nd IF	1080-15 (LN-20844BM) (1)	16-9026	8517	

Delete 2

Delete 1

4-7-75

PARTS LIST AND DESCRIPTION (CONTINUED)

(When ordering parts, state Model, Part Number, and Description.)

COILS (RF-IF) (cont)

ITEM No.	USE	REPLACEMENT DATA			
		PART No.	MEISSNER PART No.	MILLER PART No.	REMARKS
T6	2nd IF	1080-16 (YMC-20845AC) (1)	16-9027	8517	
T7	2nd IF	1080-16 (YMC-20845AC)	16-9028	8518	
T8	2nd IF	1080-17 (TMC-20846AC) (1)	16-9028	8518	
T11	Oscillator	1080-18 (KXC023169F) (1)			
T12	Xmit Osc	1080-19 (KXC-231702) (1)			
T13	Xmit Osc	1080-19 (KXC-231702) (1)			
T14	Xmit Osc	1080-20 (TKXC-22535BM) (1)			
T15	Xmit Osc	1043-22 (KXN-13638HM) (1)			
T16	Xmit Osc	1043-22 (KXN-13638HM) (1)			
T17	Xmit Osc	1043-23 (KXN-13636BM) (1)			

FILTER CHOKE

ITEM No.	RATINGS			REPLACEMENT DATA				NOTES
	CURRENT (Measured)	DC RES.	INDUCTANCE (0 CURRENT 1000~)	MFGR. PART No.	STANCOR PART No.	THORDARSON PART No.	TRIAD PART No.	
L4	700 mA	.1	1.3 mH	1080-28 (115C) (1)				(1) Number on unit.

TRANSFORMER (Audio Output)

ITEM No.	IMPEDANCE		REPLACEMENT DATA				NOTES
	PRI.	SEC.	MFGR. PART No.	STANCOR PART No.	THORDARSON PART No.	TRIAD PART No.	
T10	32	8	1079-14 (N28-751BM) (1)				(1) Number on unit

SPEAKER

ITEM No.	TYPE	REPLACEMENT DATA		NOTES
		MFGR. PART No.	QUAM PART No.	
SP1	3" PM 8 ohm	1080-62 (SR-77-09) (1)	30A05Z8	(1) Number on unit

FUSE DEVICES

ITEM No.	DESCRIPTION	REPLACEMENT DATA						
		PART No.		BUSS PART No.		LITTELFUSE PART No.		WORKMAN PART No.
		DEVICE	HOLDER	DEVICE	HOLDER	DEVICE	HOLDER	DEVICE
F1	1.5 A, Quick Acting	1080-67	1043-133	AGC 1 1/2	HDJ	31201.5	150145	

MISCELLANEOUS

ITEM No.	PART NAME	PART No.	NOTES
CF	Ceramic Filter	1079-12	(LF-B6) 455 kHz
M1	Meter	1080-65	S/RF
S2	Switch	1080-63	Channel Selector
S3	Switch	1040-131	PA/CB (Rebel 23+)
X1	Crystal	1016-136	11.275 MHz
X2	Crystal	1016-137	11.730 MHz
X3	Crystal	1016-126	23.290 MHz
X4	Crystal	1016-127	23.340 MHz
X5	Crystal	1016-128	23.390 MHz
X6	Crystal	1016-129	23.440 MHz
X7	Crystal	1016-130	23.490 MHz
X8	Crystal	1016-131	23.540 MHz
X9	Crystal	1016-132	14.950 MHz
X10	Crystal	1016-133	14.960 MHz
X11	Crystal	1016-134	14.970 MHz
X12	Crystal	1016-135	14.990 MHz

CABINETS & CABINET PARTS (When ordering specify model, chassis & color)

ITEM	PART No.
Upper Case	1080-72
Lower Case	1080-73
Front Panel	1080-70
Knob, Control	1080-78

ITEM	PART No.
Knob, Channel Selector Assembly	1080-77
Mobile Mounting Bracket	1080-84
Microphone Bracket	1079-178

ACCESSORIES

ITEM	MFGR. PART No.	REMARKS
Microphone	1080-66	Model Fanfare 100
Microphone	CMM-1	Model Rebel 23+