SAMS

PHOTOFACT®

CB RADIO SERIES

CB-53

53

APRIL 1974

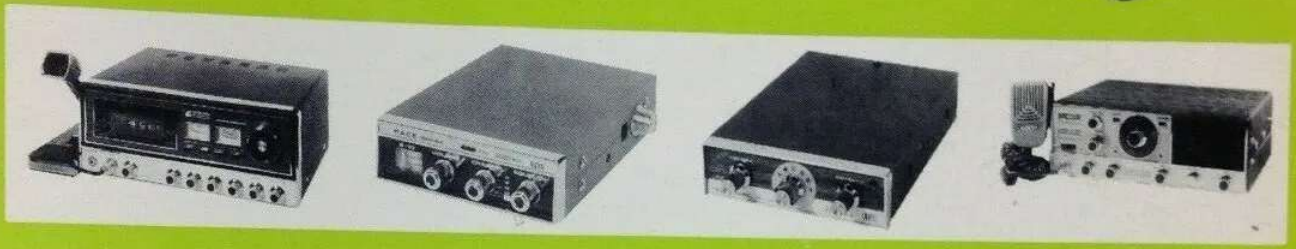

CONTENTS

HOWARD W. SAMS & CO., INC. Indianapolis, Indiana

NOTE

ONLY THOSE PERSONS PROPERLY LICENSED ARE PERMITTED TO MAKE REPAIRS OR ADJUSTMENTS WHICH MAY RESULT IN ILLEGAL OPERATION. (REFER TO FCC RULES AND REGULATIONS PART 95, SUBPARTS C & D.)

The frequency of the transmitter should be checked periodically with a secondary frequency standard to insure proper and legal operation.

Best results will be obtained when adjusting the final RF output circuit if the antenna normally used is connected and the chassis is as nearly in the cabinet as possible.

Connect either 50-ohm dummy load or the normally used antenna system.

MODEL Simba SSB (Late Production)

ALIGNMENT

Suggested Alignment Tools:

	GC ELECTRONICS
T1 thru T12, T16 thru T21	#9440
T13 thru T15, L12,L14,L15	#9089,8868
CT2 thru CT16	#5000,8290

OSC ALIGNMENT

SIGNAL GENERATOR	CHANNEL	ADJUST	REMARKS
Frequency Counter	1	CT2	Set MODE Switch to AM Connect counter to TP2. Adjust for 11.000MHz.
Frequency Counter	5	CT3	Adjust for 11.050MHz.
Frequency Counter	9	CT4	Adjust for 11.100MHz.
Frequency Counter	13	CT5	Adjust for 11.150MHz.
Frequency Counter	17	CT6	Adjust for 11.200MHz.
Frequency Counter	21	CT7	Adjust for 11.250MHz.
Frequency Counter	1	CT8	Leave MODE Switch on AM Connect counter to TP3. Adjust for 8.1665MHz.
Frequency Counter	2	CT9	Adjust for 8.1765MHz.
Frequency Counter	3	CT10	Adjust for 8.1865MHz.
Frequency Counter	4	CT11	Adjust for 8.2065MHz.
Frequency Counter	1	CT12	Set MODE Switch to LSB. Connect counter to TP3. Adjust for 8.1635MHz.
Frequency Counter	2	CT13	Adjust for 8.1735MHz.
Frequency Counter	3	CT14	Adjust for 8.1835MHz.
Frequency Counter	4	CT15	Adjust for 8.2035MHz.
Frequency Counter	Any	CT18	Connect counter to emitter of TR-21 (SSB-OSC). Adjust for 7.8015MHz.

HOWARD W. SAMS & CO., INC. Indianapolis, Indiana 46206

 Printed in U. S. of America 4CY131

OSC ALIGNMENT (CONTINUED)

SIGNAL GENERATOR	CHANNEL	ADJUST	REMARKS
Frequency Counter	Any	CT17	Counter to emitter of TR-21, set MODE Switch to USB. Adjust for 7.7985MHz.
Frequency Counter	Any	CT16	Set MODE Switch to AM, Connect counter to TP7 and adjust for 7.3435MHz.

RECEIVER ALIGNMENT

Connect an AC VTVM across speaker voice coil. Set Squelch control fully CCW. Adjust volume control to obtain a suitable reading.

SIGNAL GENERATOR	CHANNEL	ADJUST	REMARKS
AM High side thru .01mfd to base of TR12 (2nd Rec.Mixer) low side to ground. Set to 455KHz (Mod.).	Any	T15,T14, T13	Adjust for maximum.
High side thru .01mfd to Antenna connector, low side to ground. Set to 27.085MHz (Mod.).	11	T3,T2,	Adjust for maximum.
SSB High side thru .01mfd to TP6 Low side to ground. Set to 7.8MHz (Unmod.) an audio beat will be produced by the SSB OSC. and the 7.8MHz IF.	Any	T16,T11 T10	MODE Switch to LSB. Adjust for maximum.

TRANSMITTER ALIGNMENT

INDICATOR	ADJUST	REMARKS
AM RF Wattmeter to antenna connector	T4,T5, T6,T7, T8,T19, T20,T21 VR17,L12 L14	Key transmitter and adjust for maximum.
0-500 mA DC Meter	L14	Insert meter in meter jumper in collector circuit of TR31. Key transmitter and readjust L14 for 5 watts DC input.
TV Set (Ch. 2)	L1	Key transmitter and adjust for MINIMUM interference.
SSB RF Wattmeter Monitor Scope	VR13	Connect wattmeter and scope to the antenna connector, set MODE switch to USB or LSB. Short microphone input to ground. Key transmitter and adjust for MINIMUM carrier (no audio).
0-50 mA DC Meter	VR18	Insert meter in meter jumper in collector of TR31. Key transmitter and adjust for MINIMUM current (no audio).
RF Wattmeter Monitor Scope	T18,VR12, L15	Remove short from microphone input and connect an audio generator in the input. Set audio level to obtain maximum without distortion. Adjust for maximum.
RF Wattmeter 0-1 Amp DC Meter	L15	Insert meter in meter jumper in collector of TR31. Key transmitter and adjust to reduce collector current until power output just begins to fall off on RF Wattmeter.
		NOTE: After SSB transmitter alignment is completed it may be necessary to readjust L12 for 5 watts AM input.

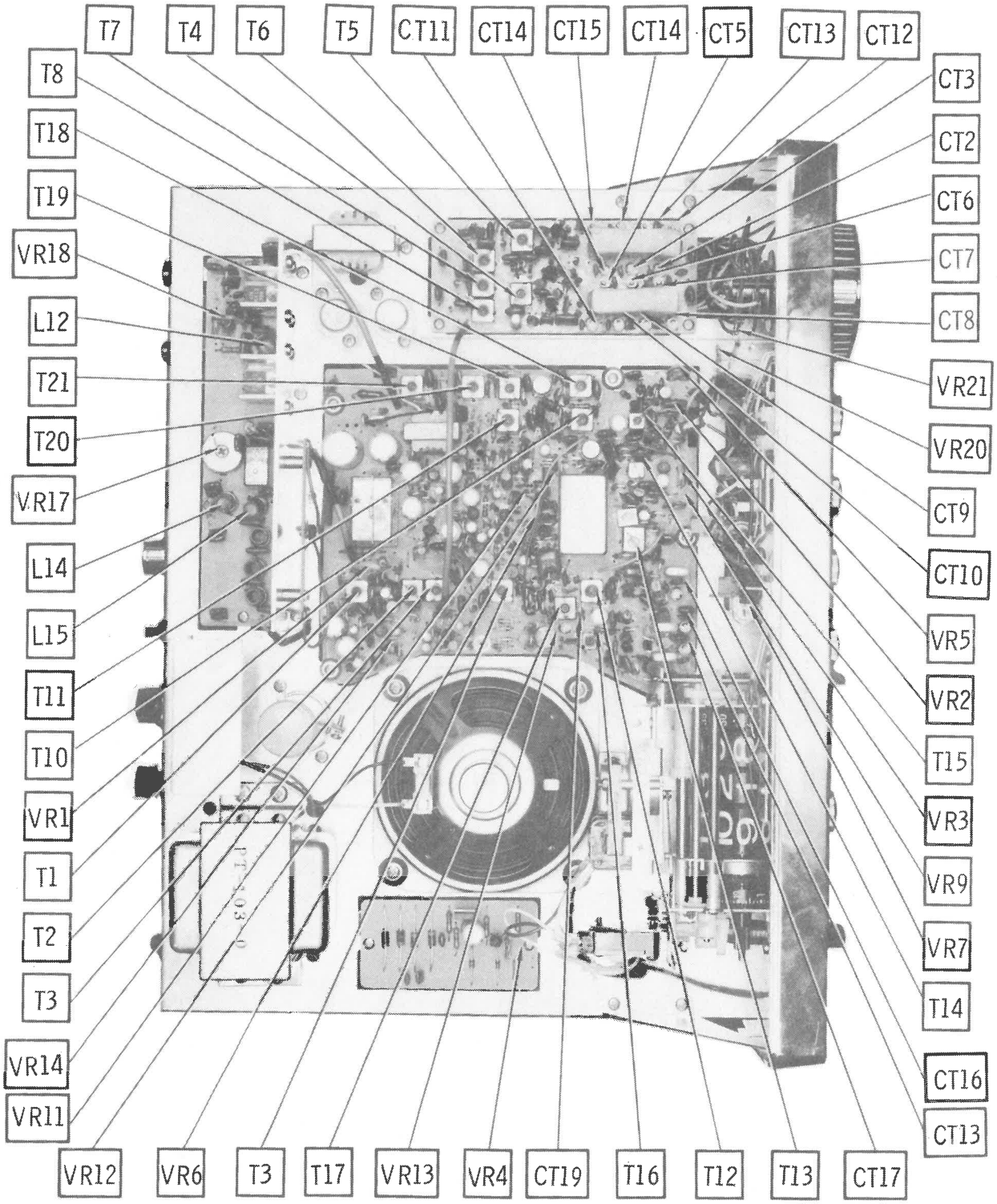
T7
T4
T6
T5
CT11
CT14
CT15
CT14
CT5
CT13
CT12
T8
T18
T19
VR18
L12
T21
T20
VR17
L14
L15
T11
T10
VR1
T1
T2
T3
VR14
VR11
VR12
VR6
T3
T17
VR13
VR4
CT19
T16
T12
T13
CT17
CT3
CT2
CT6
CT7
CT8
VR21
VR20
CT9
CT10
VR5
VR2
T15
VR3
VR9
VR7
T14
CT16
CT13

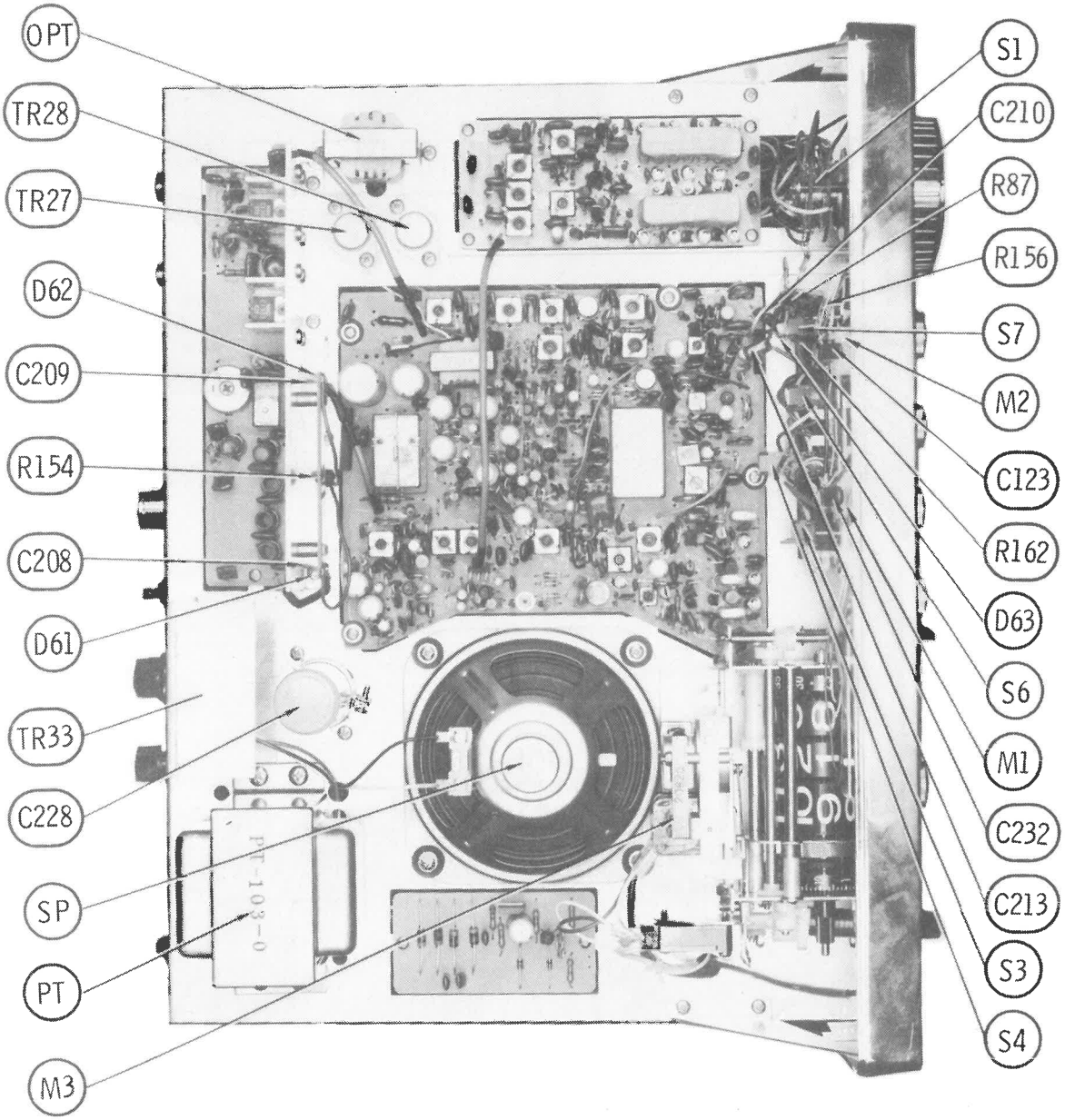

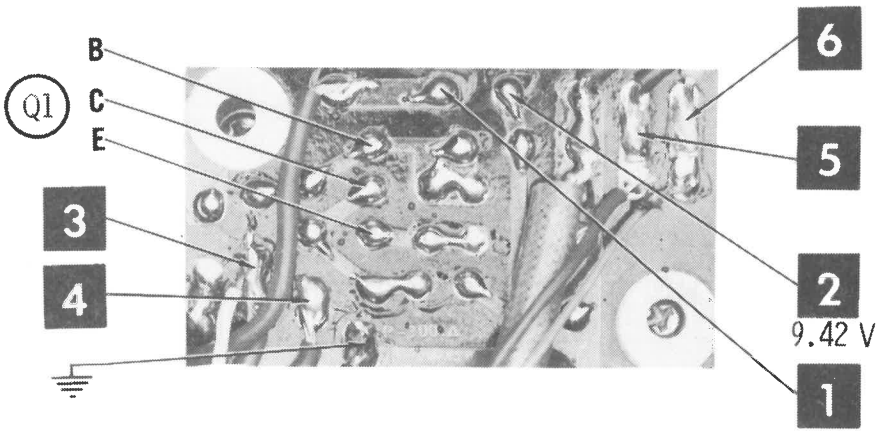

A Howard W. Sams CIRCUITRACE® Photo

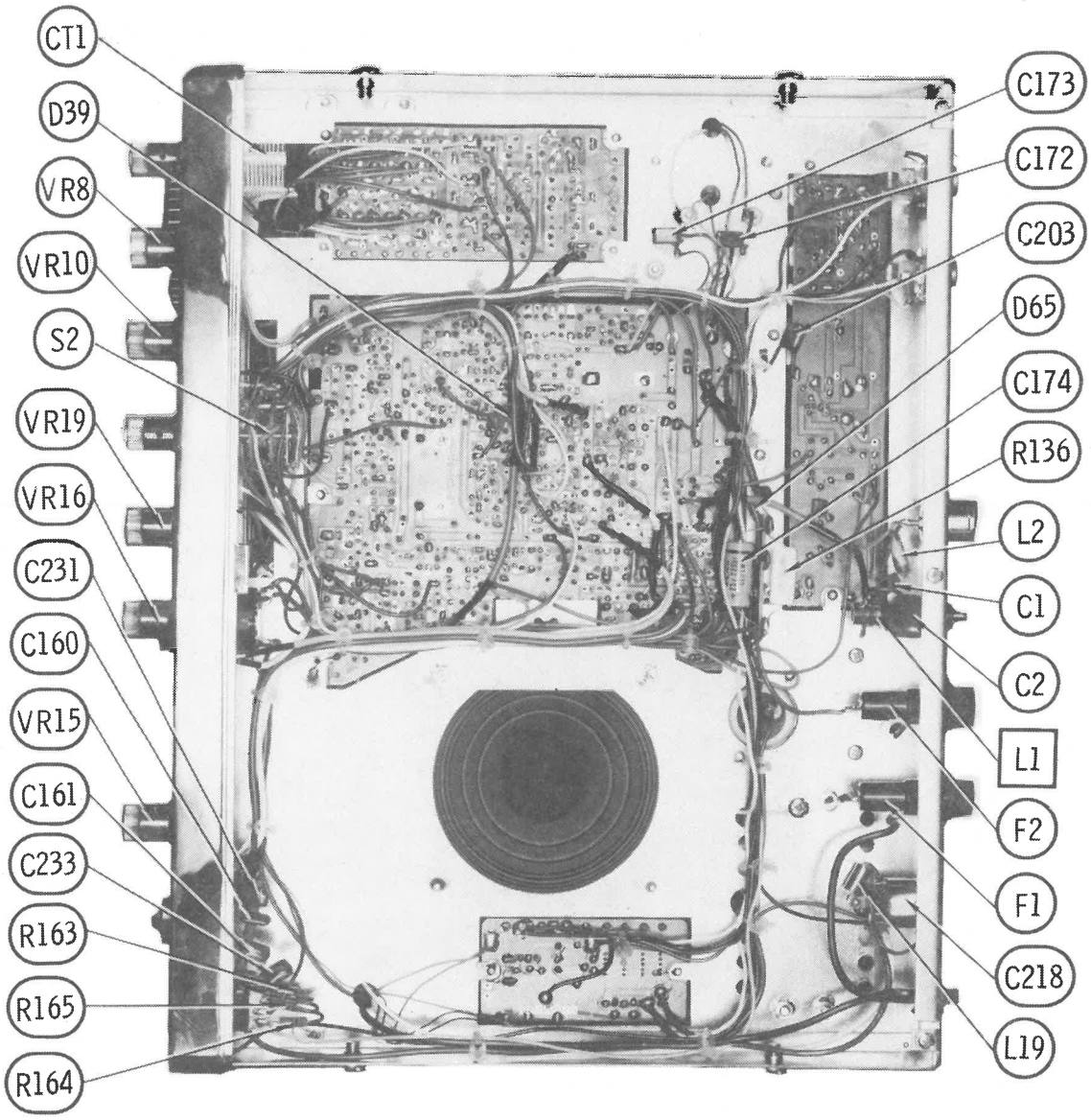
CT1
D39
VR8
VR10
S2
VR19
VR16
C231
C160
VR15
C161
C233
R163
R165
R164
C173
C172
C203
D65
C174
R136
L2
C1
C2
L1
F2
F1
C218
L19

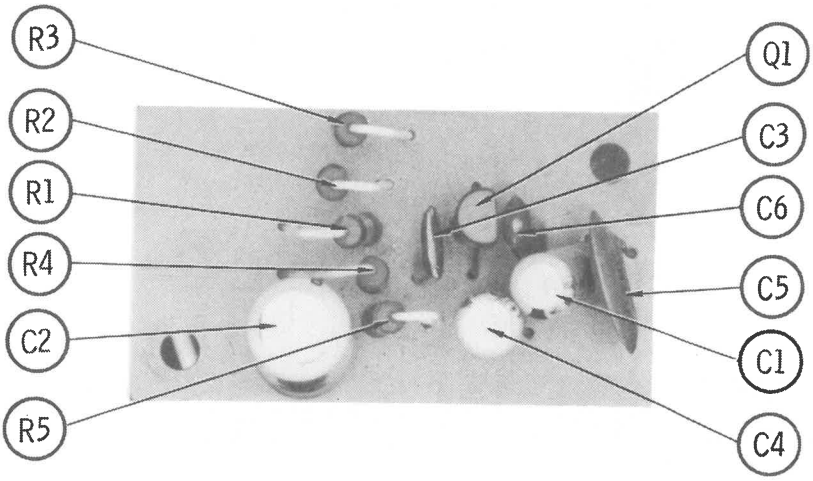
R3
R2
R1
R4
C2
R5
Q1
C3
C6
C5
C1
C4

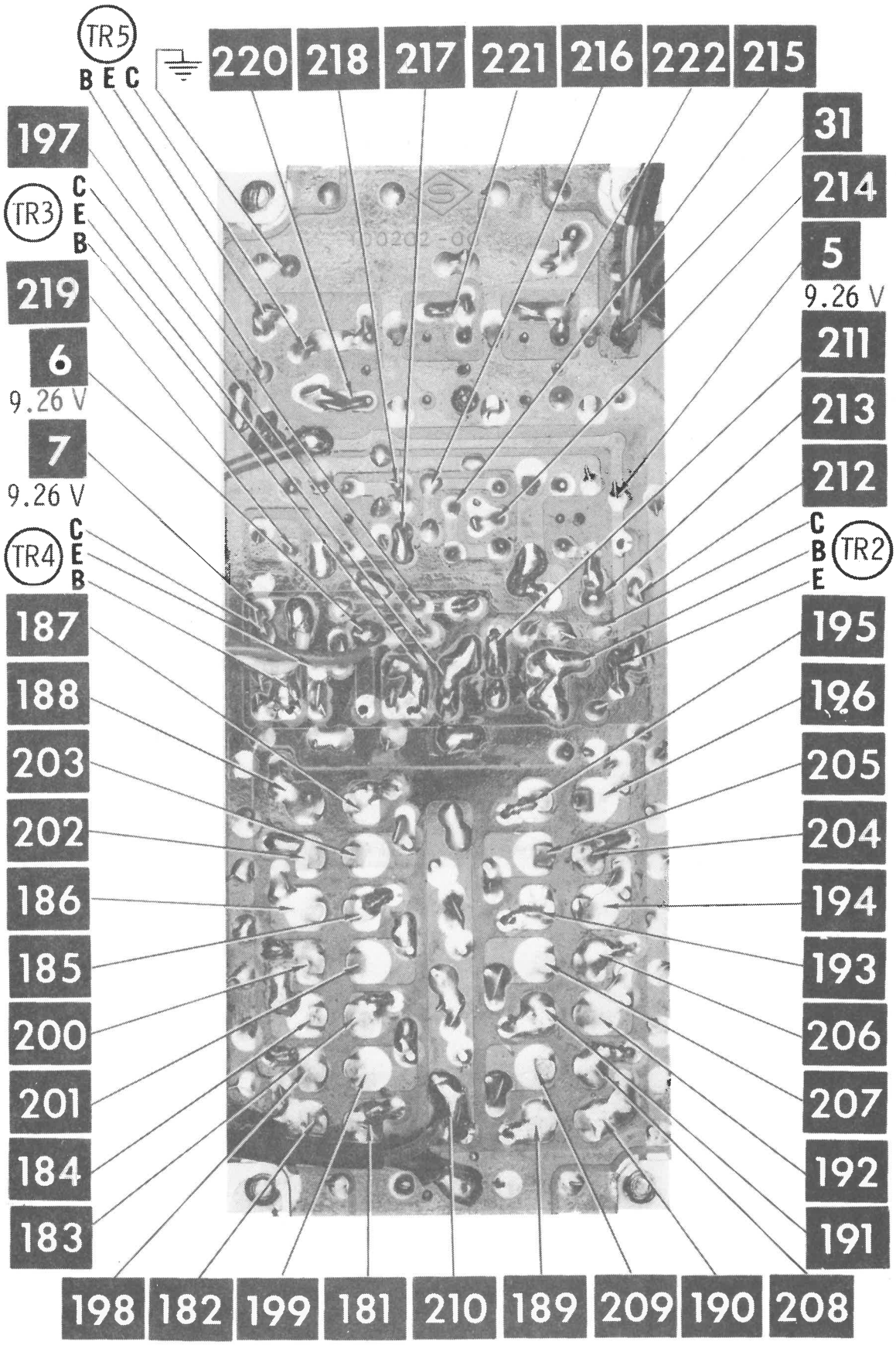

A Howard W. Sams CIRCUITRACE® Photo

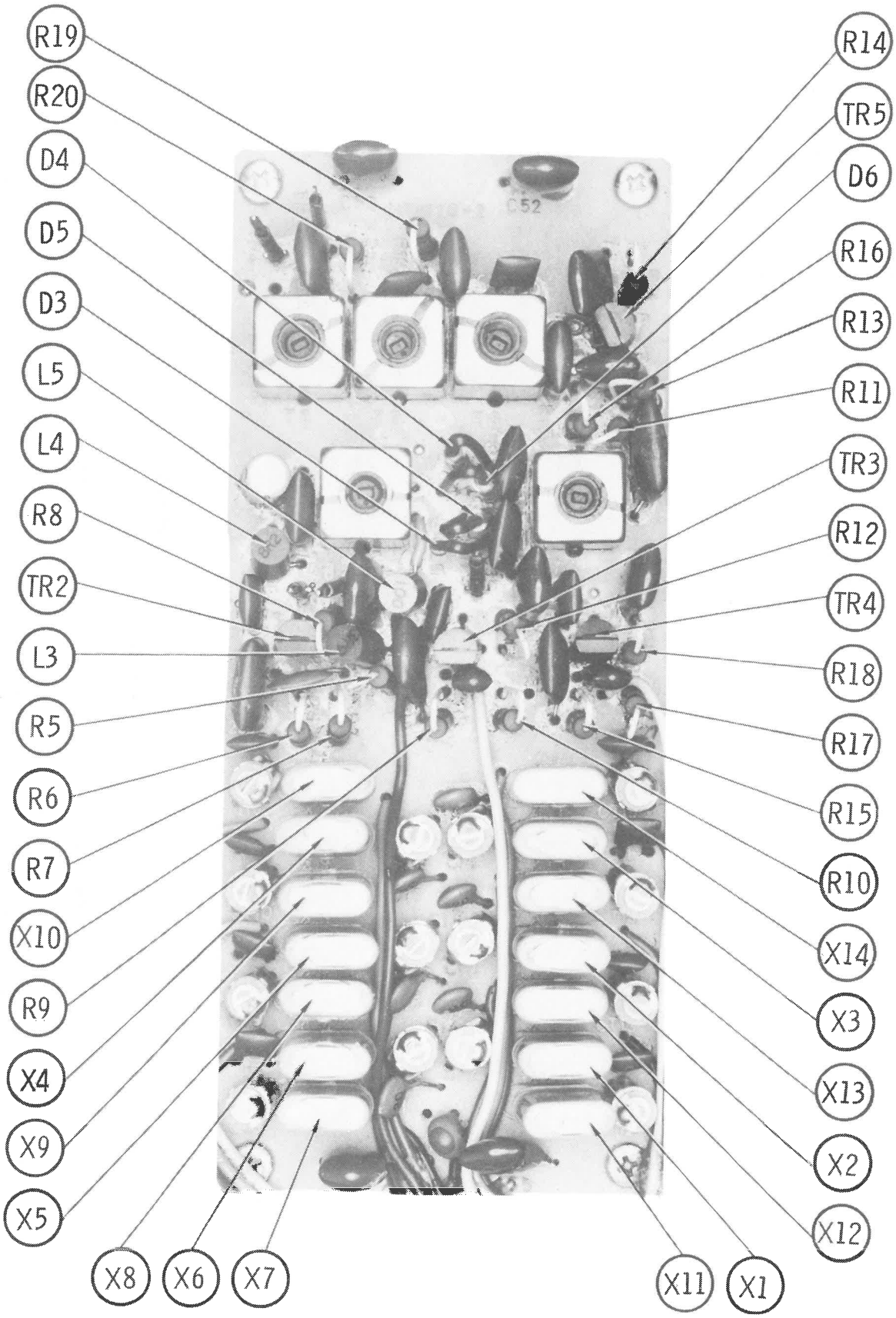
R19
R20
D4
D5
D3
L5
L4
R8
TR2
L3
R5
R6
R7
X10
R9
X4
X9
X5
X8
X6
X7
R14
TR5
D6
R16
R13
R11
TR3
R12
TR4
R18
R17
R15
R10
X14
X3
X13
X2
X12
X11
X1

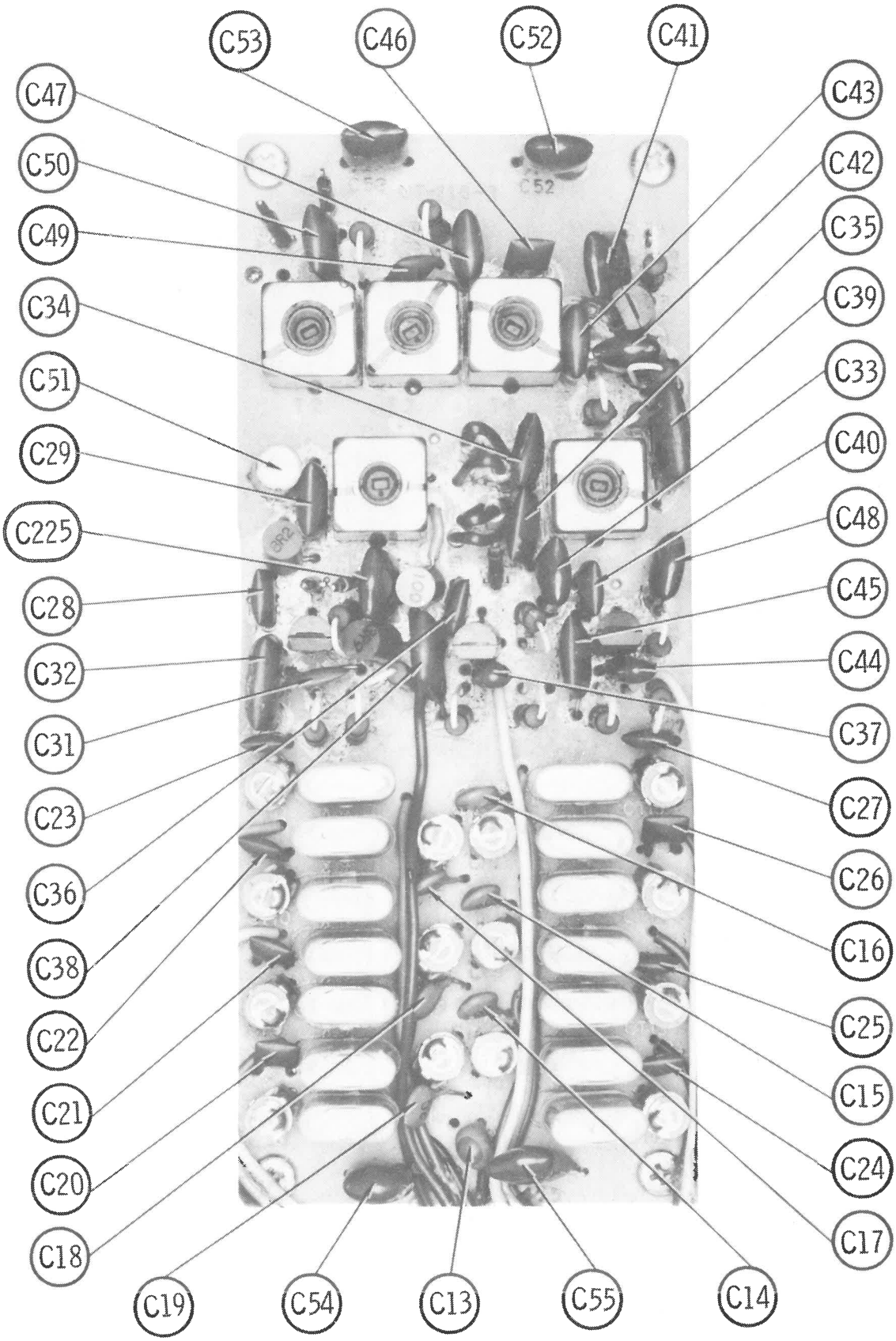
C53
C46
C52
C41
C47
C50
C49
C34
C51
C29
C225
C28
C32
C31
C23
C36
C38
C22
C21
C20
C18
C19
C54
C13
C55
C14
C17
C24
C15
C25
C16
C26
C27
C37
C44
C45
C48
C40
C33
C39
C35
C42
C43

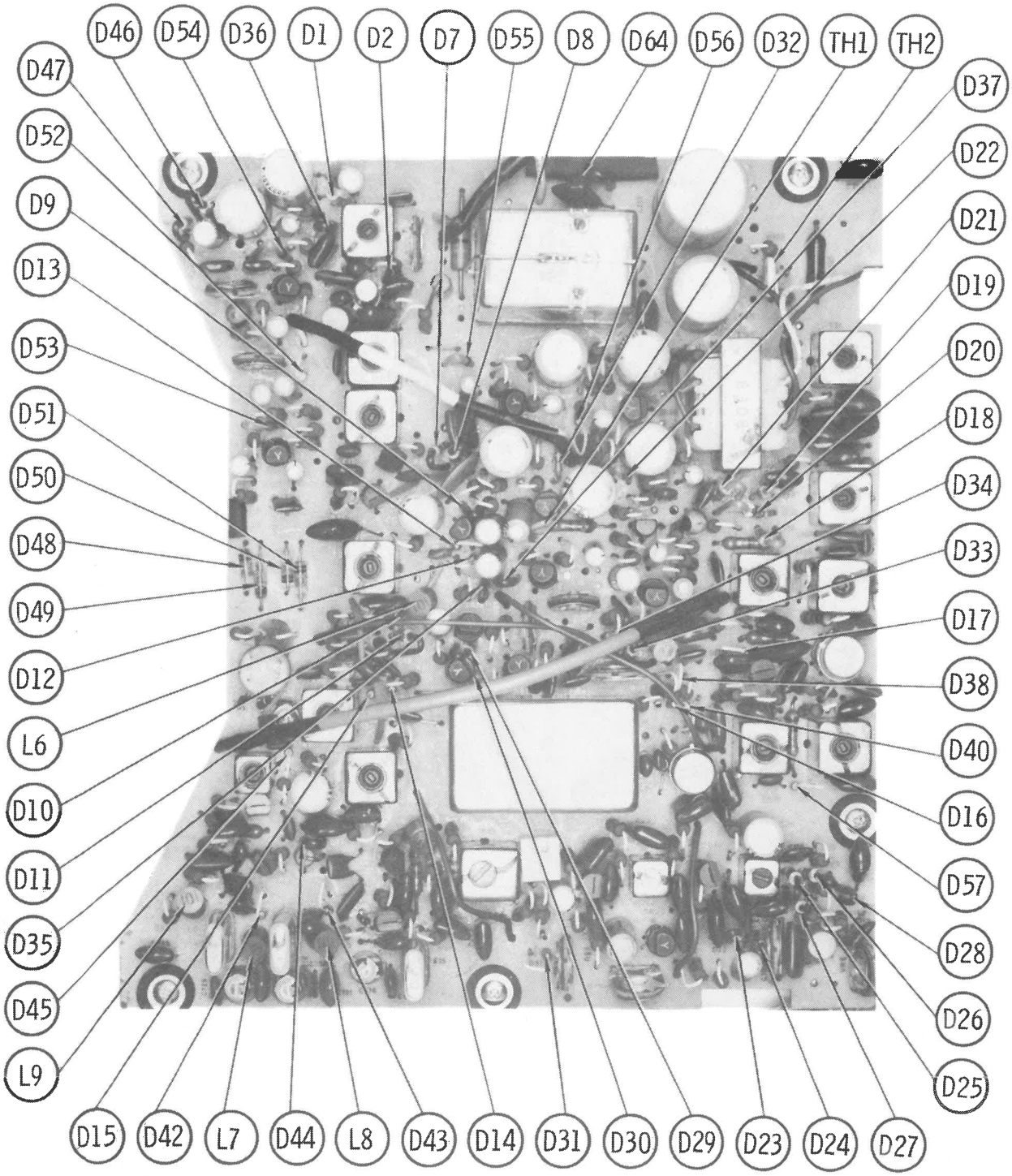
D46
D54
D36
D1
D2
D7
D55
D8
D64
D56
D32
TH1
TH2
D47
D52
D9
D13
D53
D51
D50
D48
D49
D12
L6
D10
D11
D35
D45
L9
D37
D22
D21
D19
D20
D18
D34
D33
D17
D38
D40
D16
D57
D28
D26
D25
D15
D42
L7
D44
L8
D43
D14
D31
D30
D29
D23
D24
D27

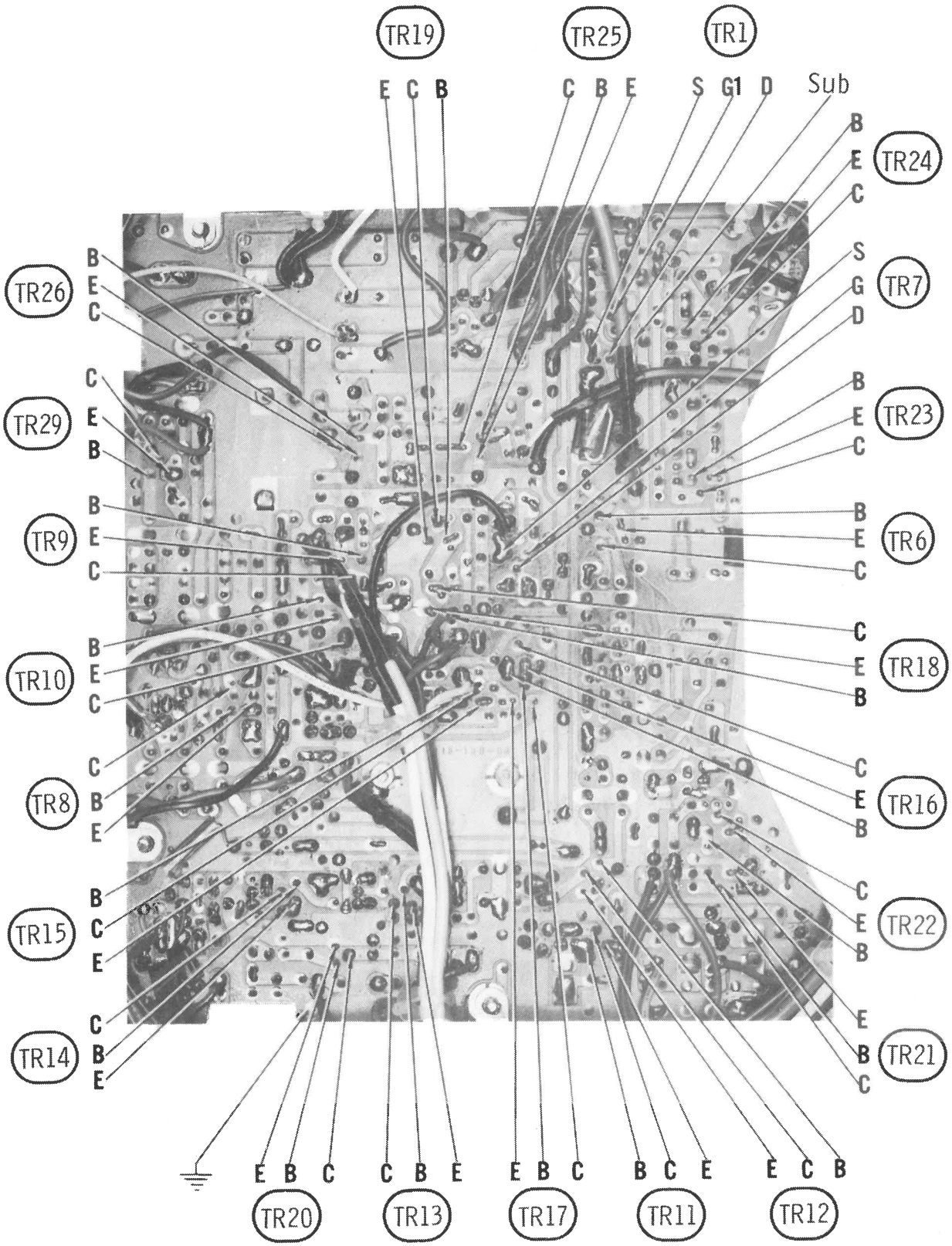
TR19
E C B
TR25
C B E
TR1
S G1 D Sub
TR24
B E C
TR7
S G D
TR23
B E C
TR6
B E C
TR18
C E B
TR16
C E B
TR22
C E B
TR21
E B C
TR26
B E C
TR29
C E B
TR9
B E C
TR10
B E C
TR8
C B E
TR15
B C E
TR14
C B E
TR20
E B C
TR13
C B E
TR17
E B C
TR11
B C E
TR12
E C B

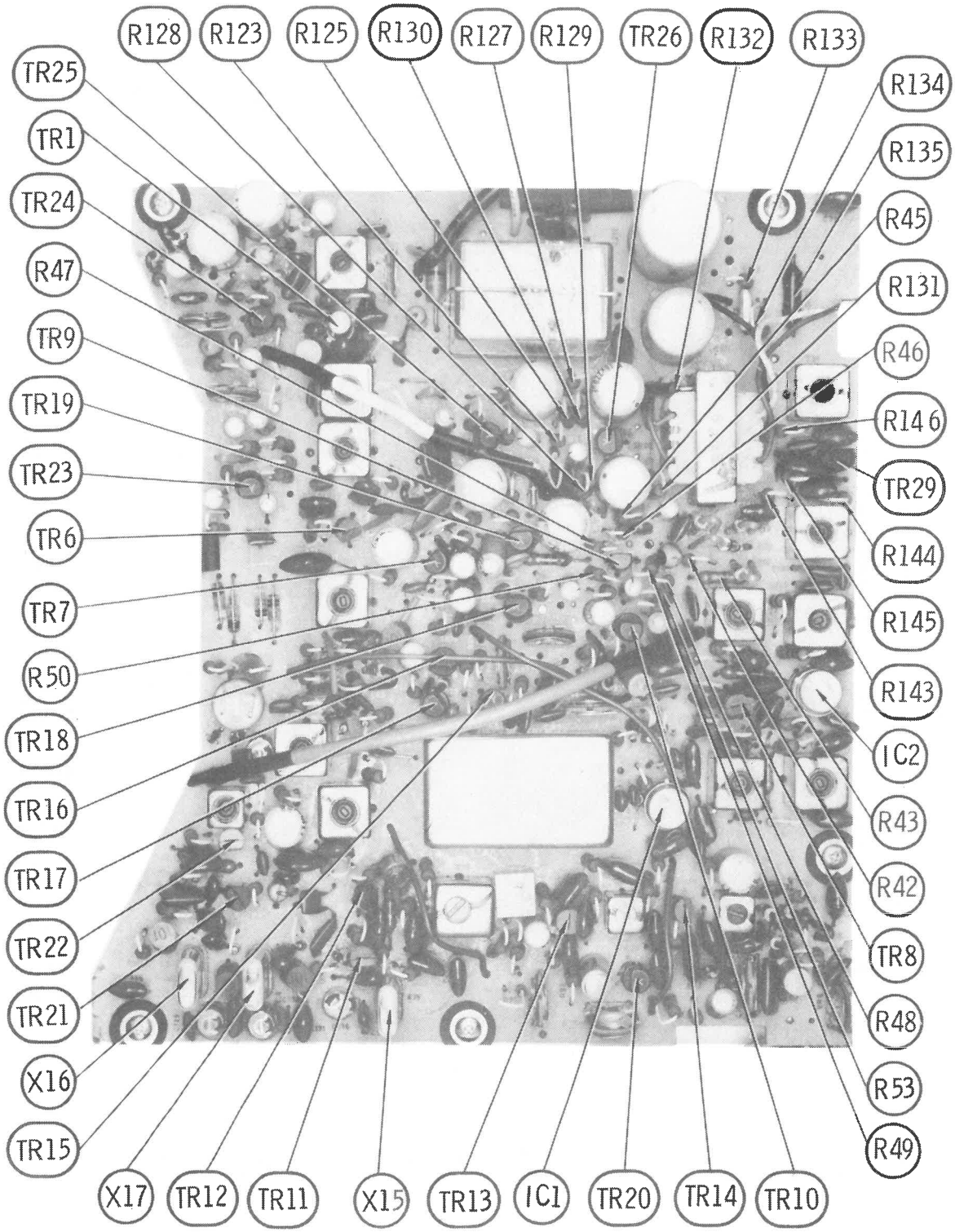
R128
R123
R125
R130
R127
R129
TR26
R132
R133
TR25
TR1
TR24
R47
TR9
TR19
TR23
TR6
TR7
R50
TR18
TR16
TR17
TR22
TR21
X16
TR15
X17
TR12
TR11
X15
TR13
IC1
TR20
TR14
TR10
R134
R135
R45
R131
R46
R146
TR29
R144
R145
R143
IC2
R43
R42
TR8
R48
R53
R49

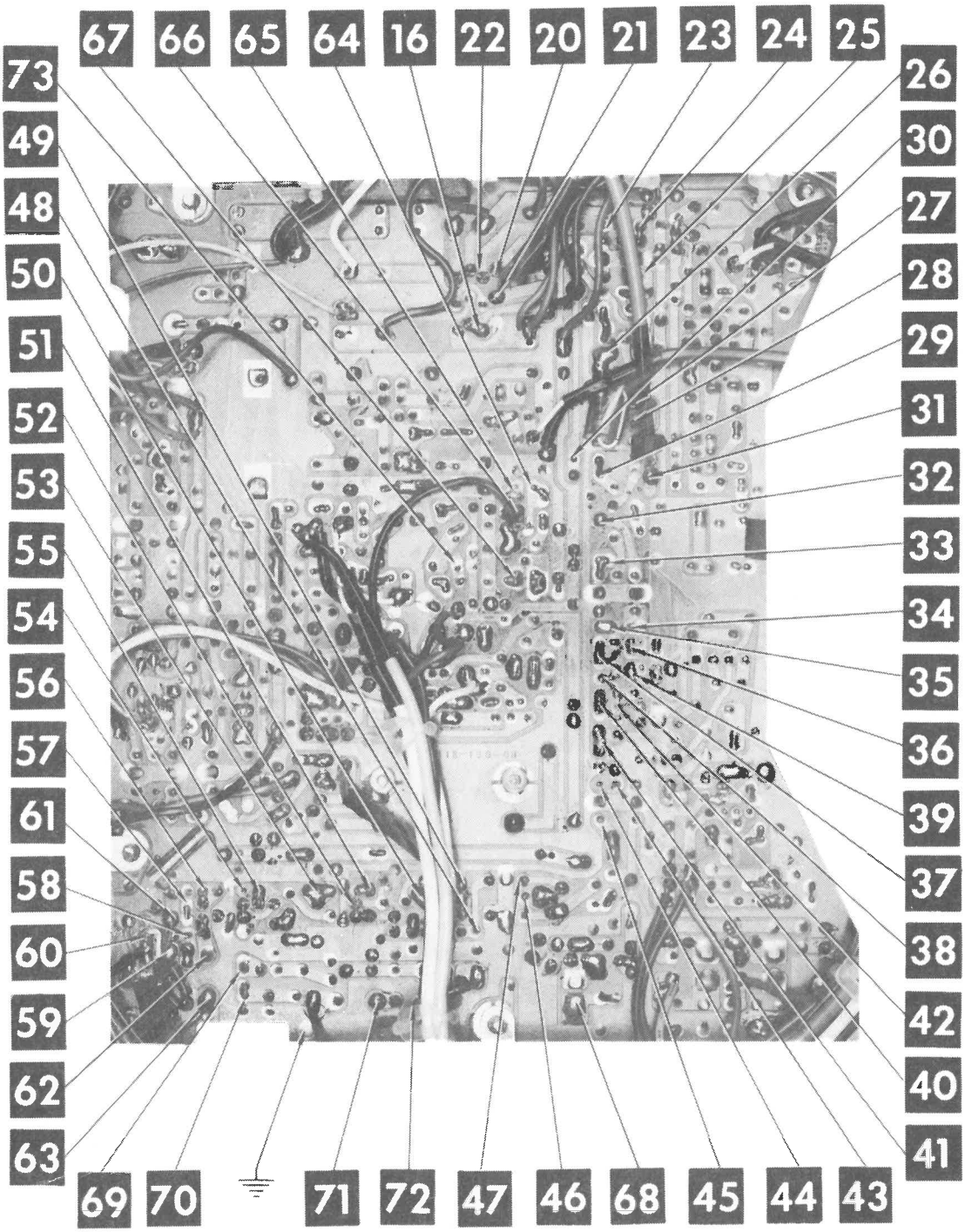

A Howard W. Sams CIRCUITRACE® Photo

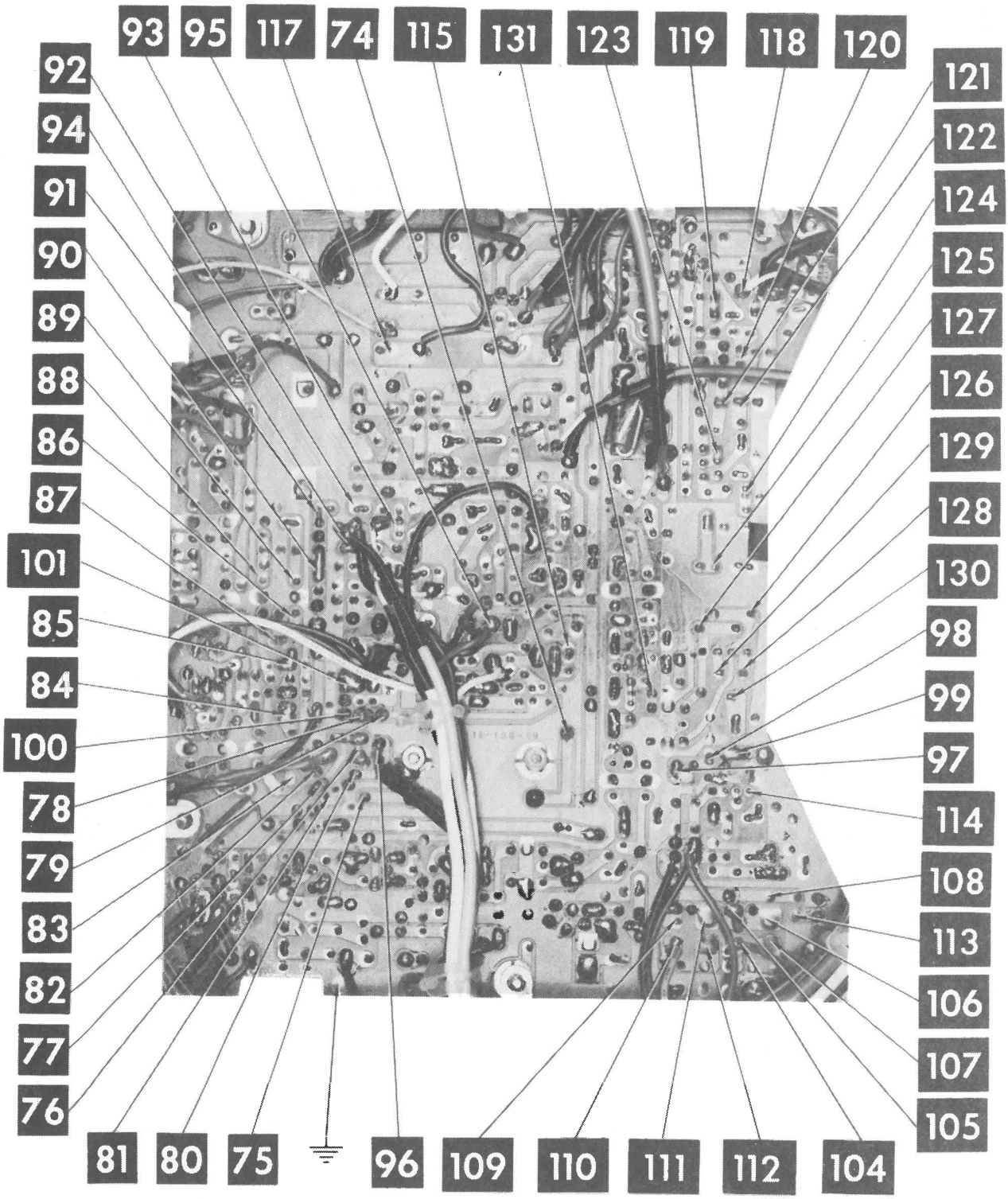

A Howard W. Sams CIRCUITRACE® Photo

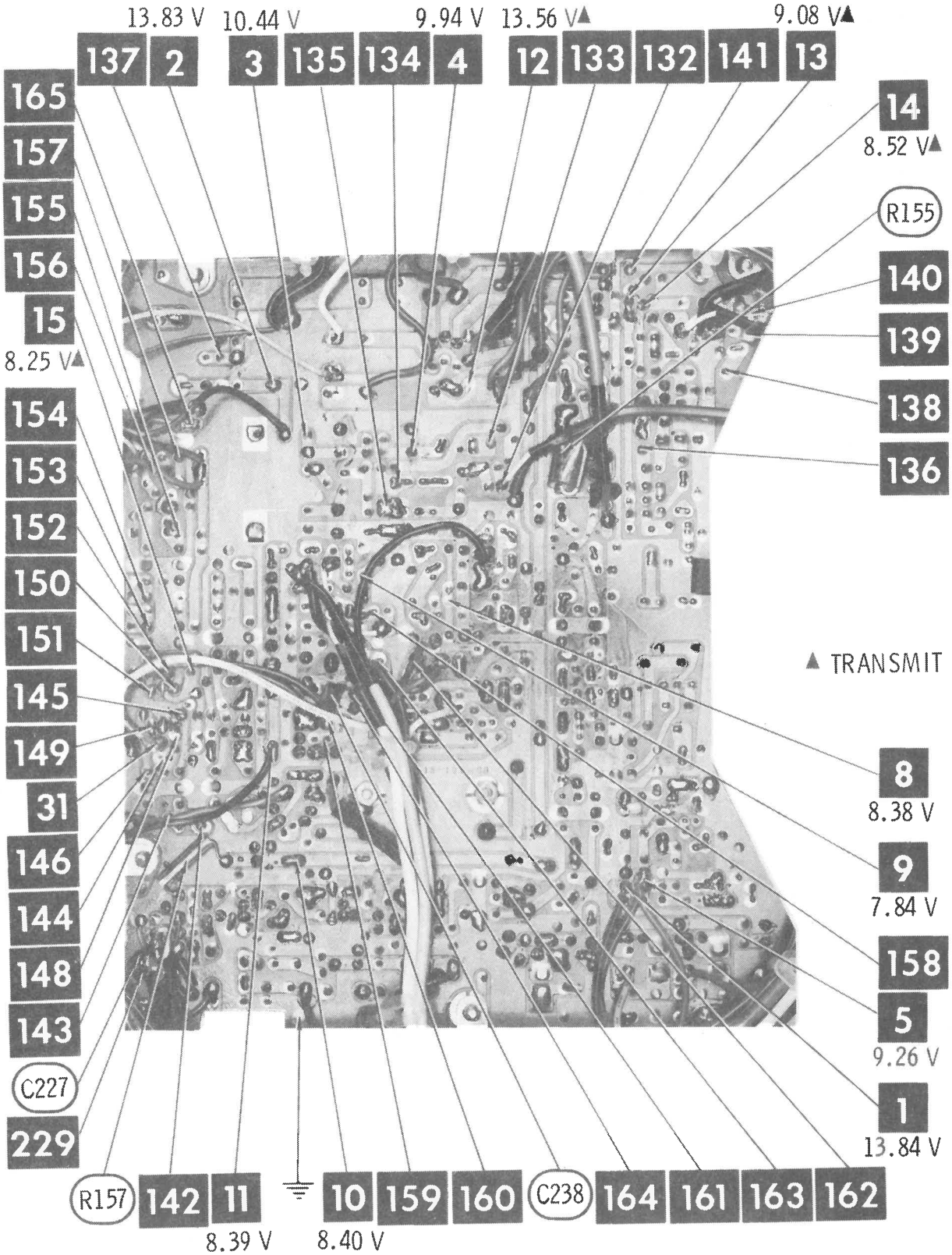

A Howard W. Sams CIRCUITRACE® Photo

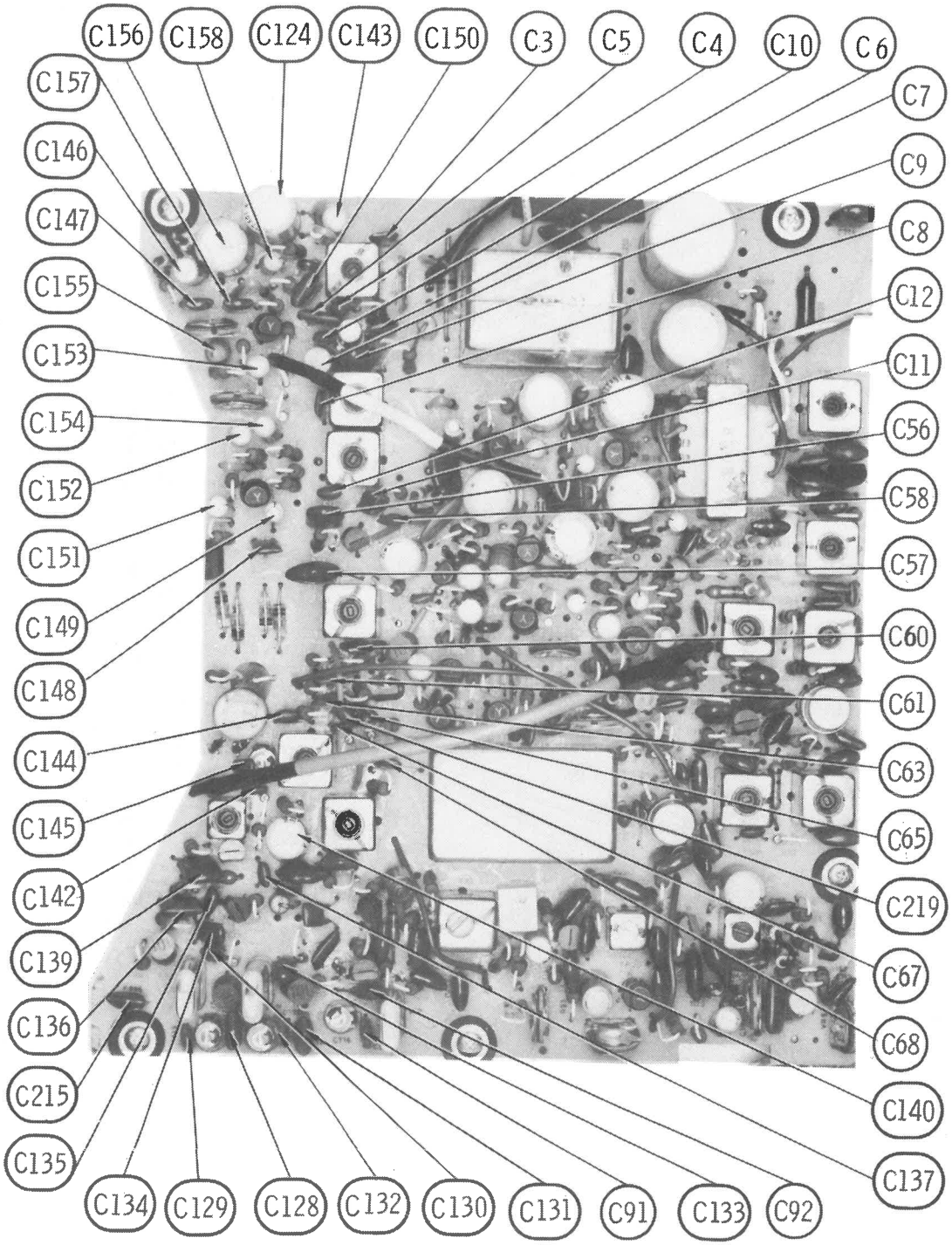

PEARCE-SIMPSON MODEL SIMBA SSB (LATE PROD.)

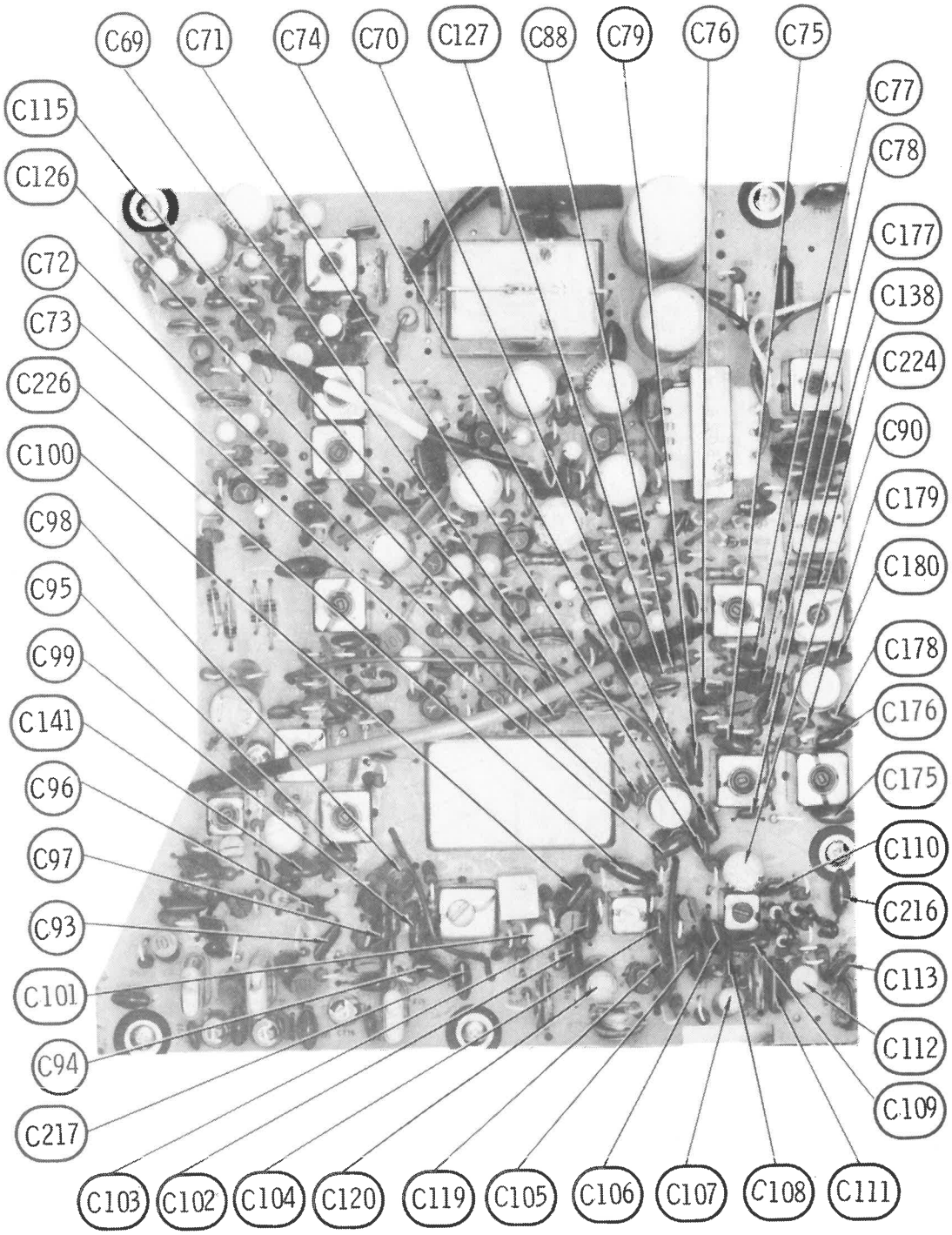
C69
C71
C74
C70
C127
C88
C79
C76
C75
C77
C78
C115
C126
C177
C138
C224
C72
C73
C226
C90
C100
C179
C98
C180
C95
C178
C99
C176
C141
C175
C96
C110
C97
C216
C93
C113
C101
C112
C94
C109
C217
C103
C102
C104
C120
C119
C105
C106
C107
C108
C111

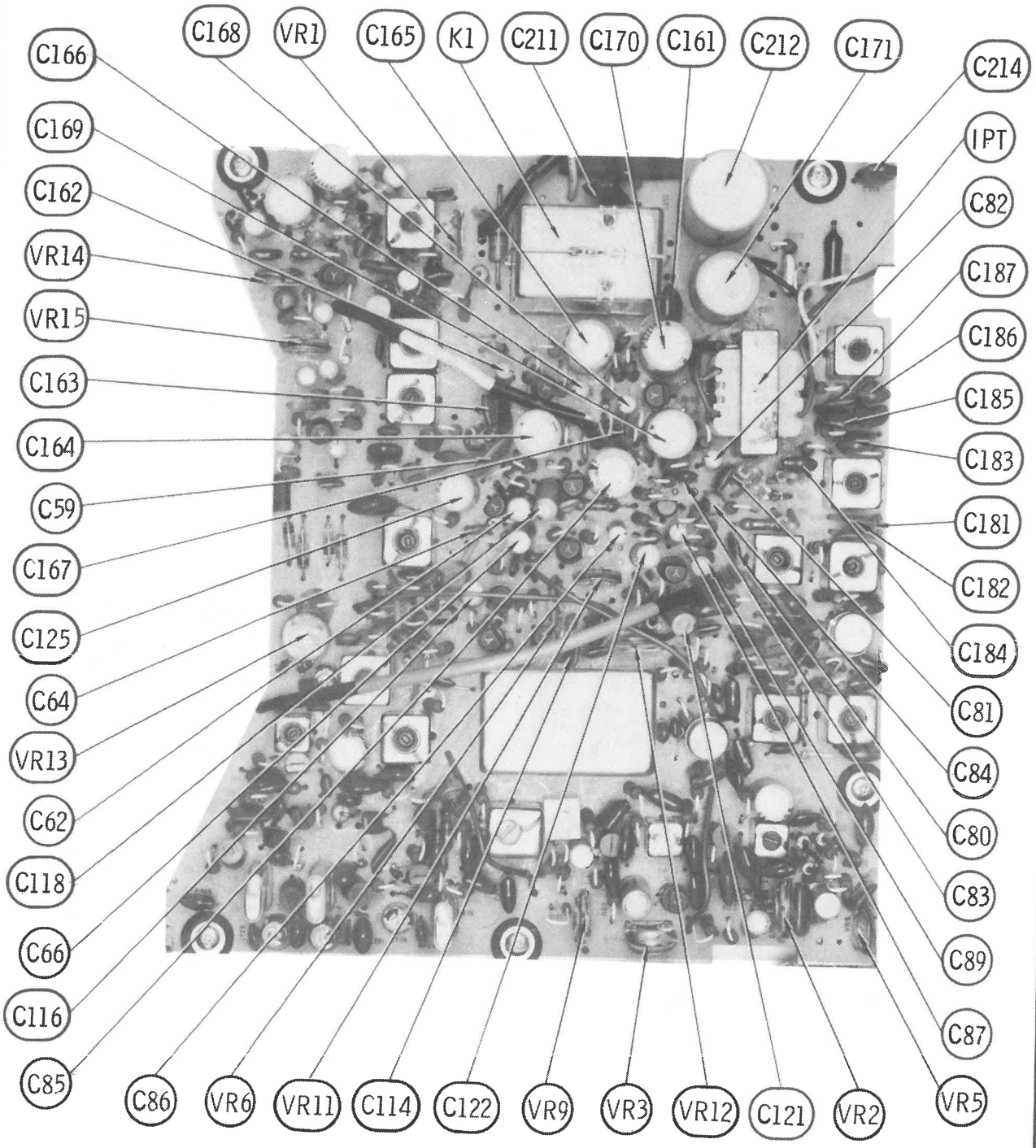
C168
VR1
C165
K1
C211
C170
C161
C212
C171
C166
C214
C169
IPT
C162
C82
VR14
C187
VR15
C186
C163
C185
C164
C183
C59
C181
C167
C182
C125
C184
C64
C81
VR13
C84
C62
C80
C118
C83
C66
C89
C116
C87
C85
C86
VR6
VR11
C114
C122
VR9
VR3
VR12
C121
VR2
VR5

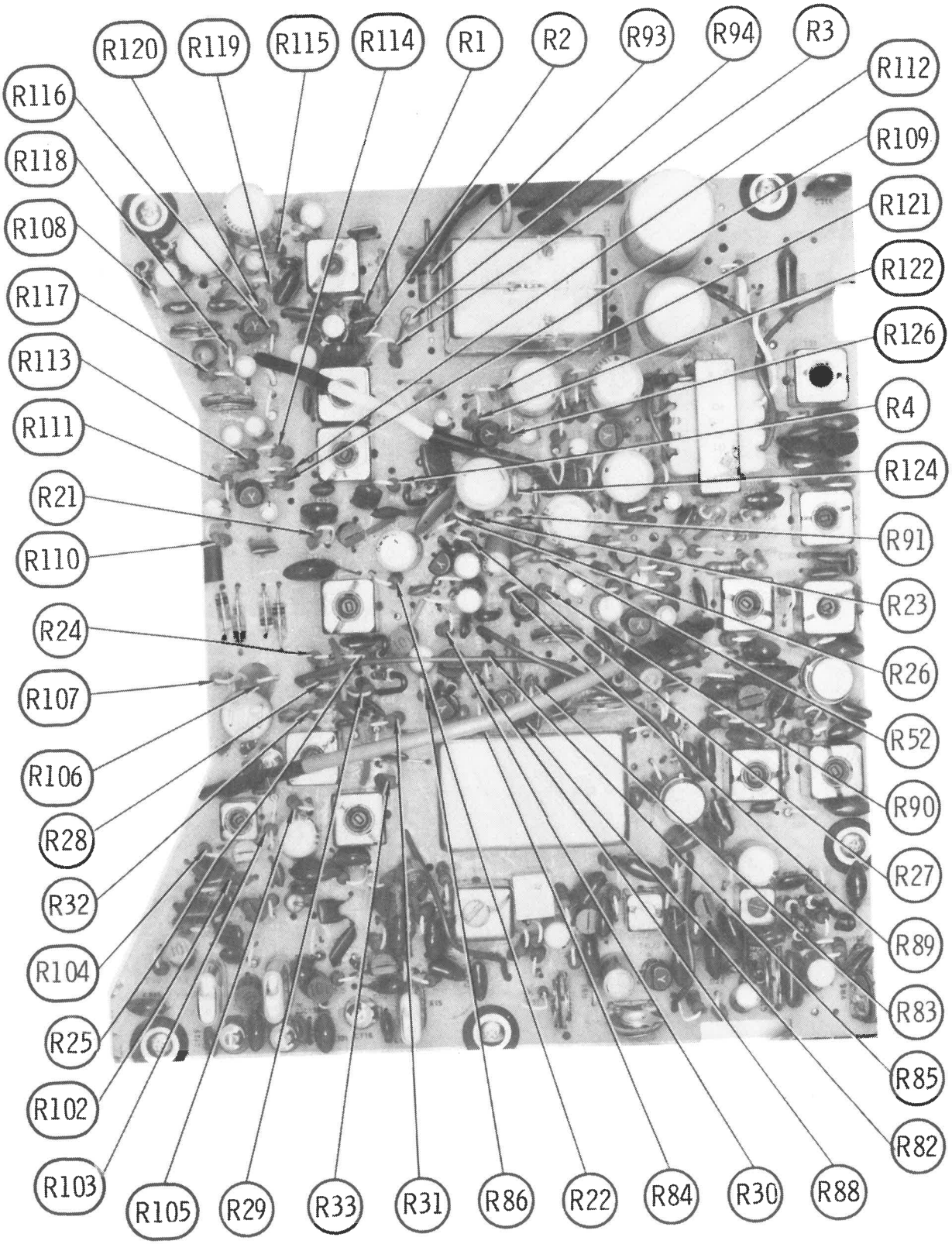
R120
R119
R115
R114
R1
R2
R93
R94
R3
R112
R109
R121
R122
R126
R4
R124
R91
R23
R26
R52
R90
R27
R89
R83
R85
R82
R88
R30
R84
R22
R86
R31
R33
R29
R105
R103
R102
R25
R104
R32
R28
R106
R107
R24
R110
R21
R111
R113
R117
R108
R118
R116

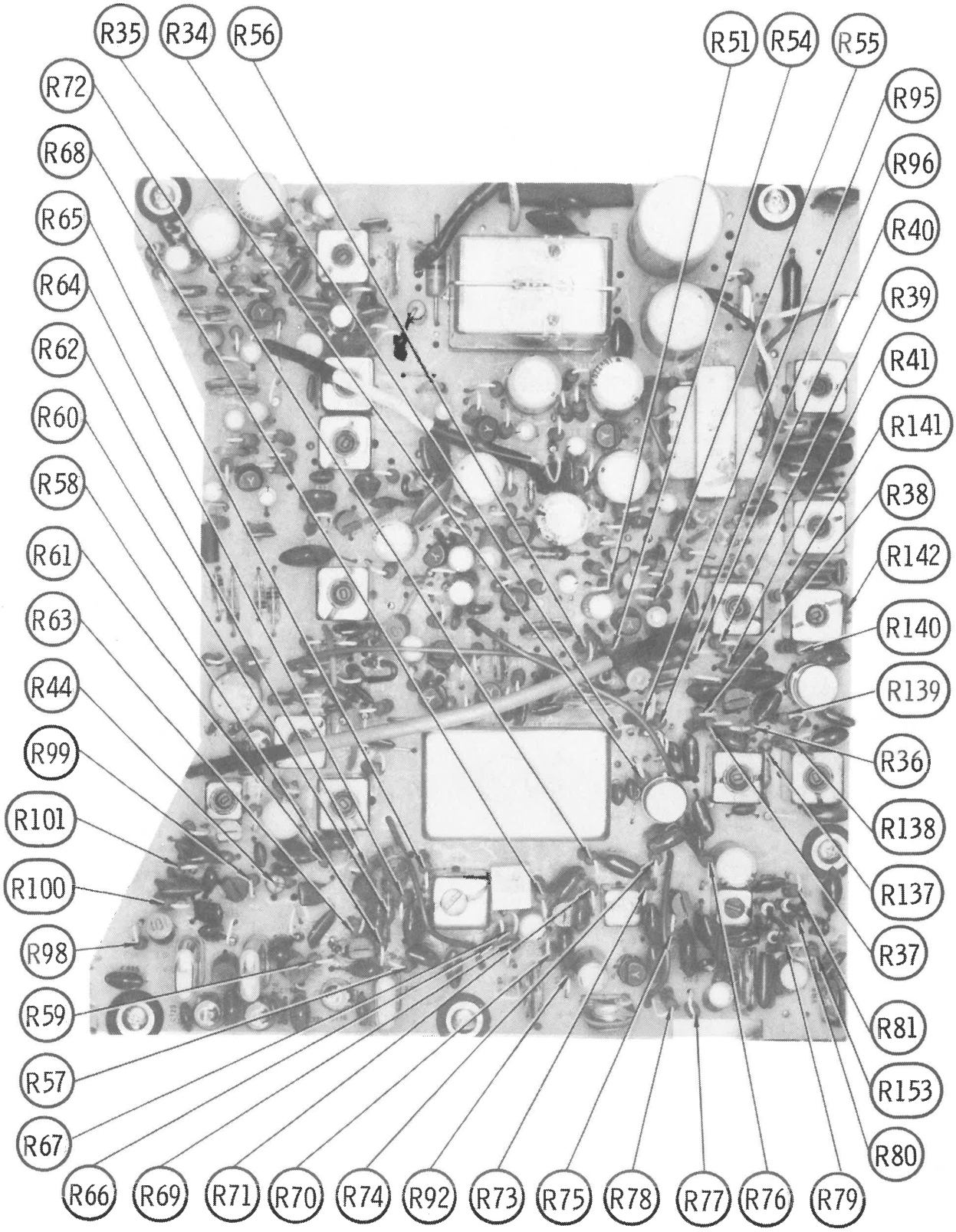
R35
R34
R56
R51
R54
R55
R72
R95
R68
R96
R65
R40
R64
R39
R62
R41
R60
R141
R58
R38
R61
R142
R63
R140
R44
R139
R99
R36
R101
R138
R100
R137
R98
R37
R59
R81
R57
R153
R67
R80
R66
R69
R71
R70
R74
R92
R73
R75
R78
R77
R76
R79

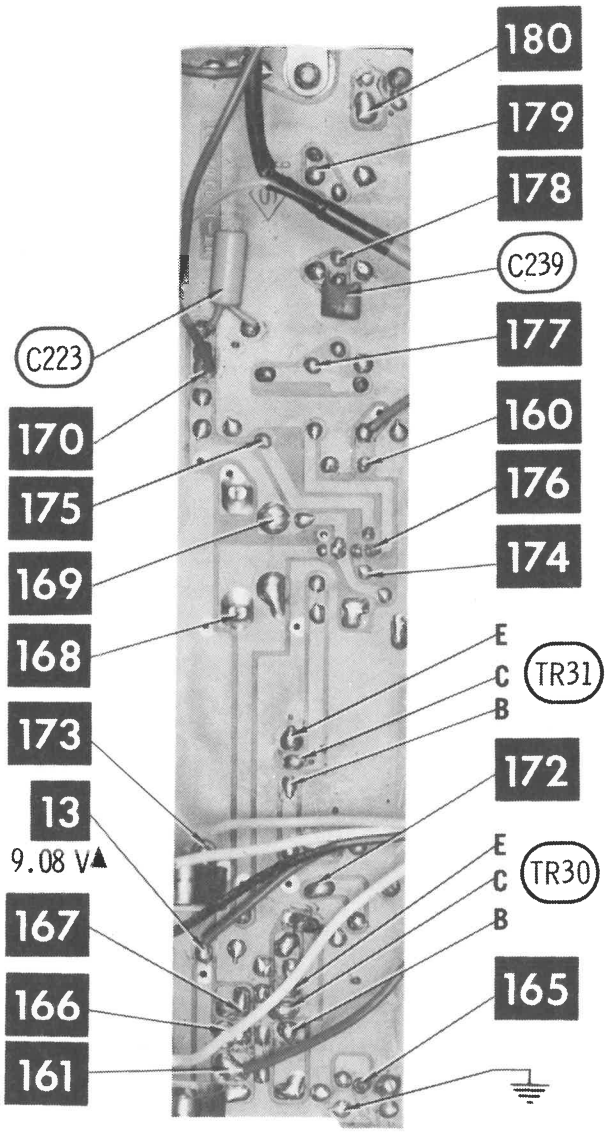

▲TRANSMIT

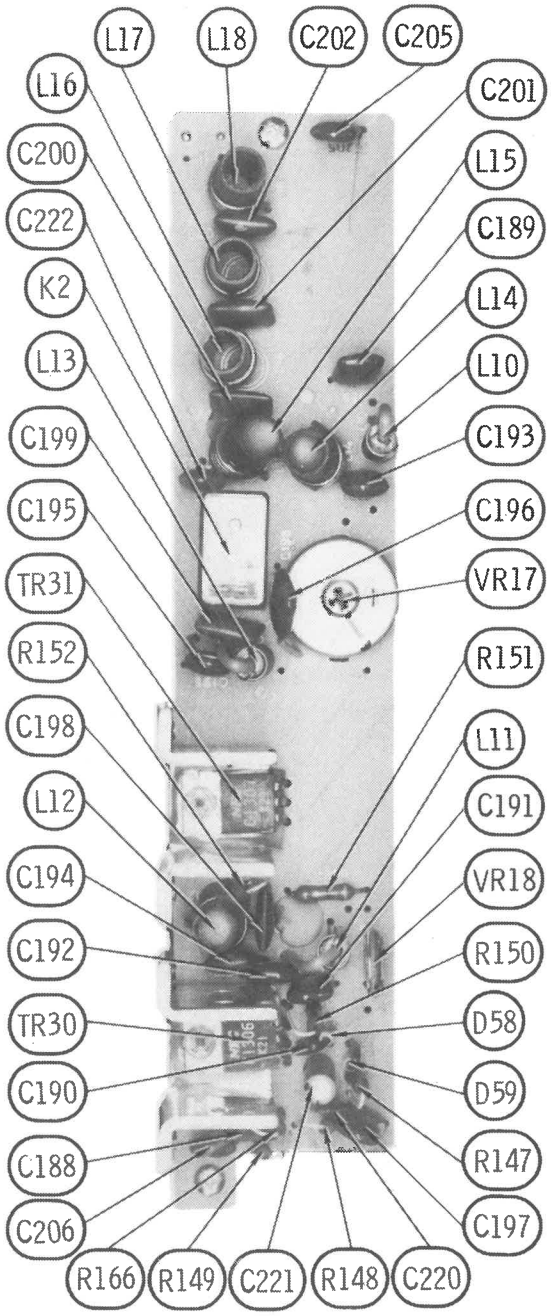

A Howard W. Sams CIRCUITRACE® Photo

A Howard W. Sams CIRCUITRACE® Photo

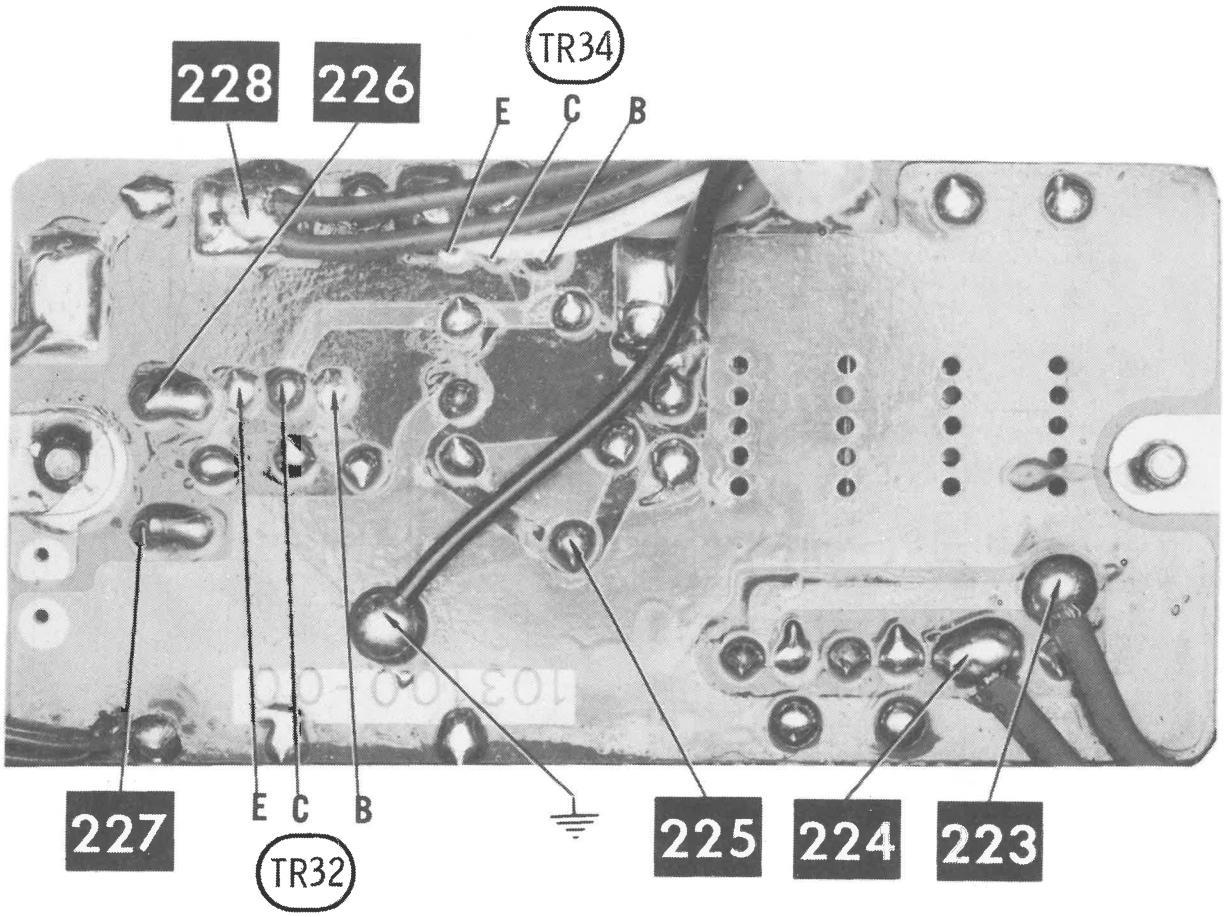

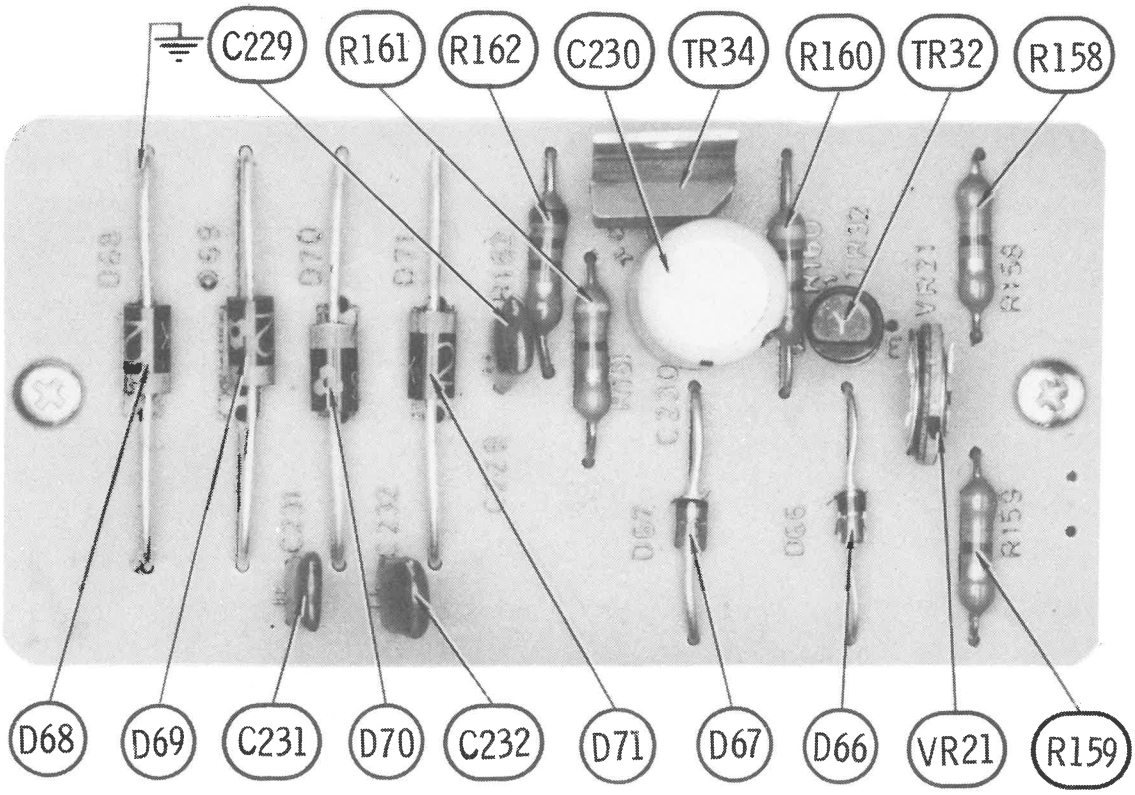

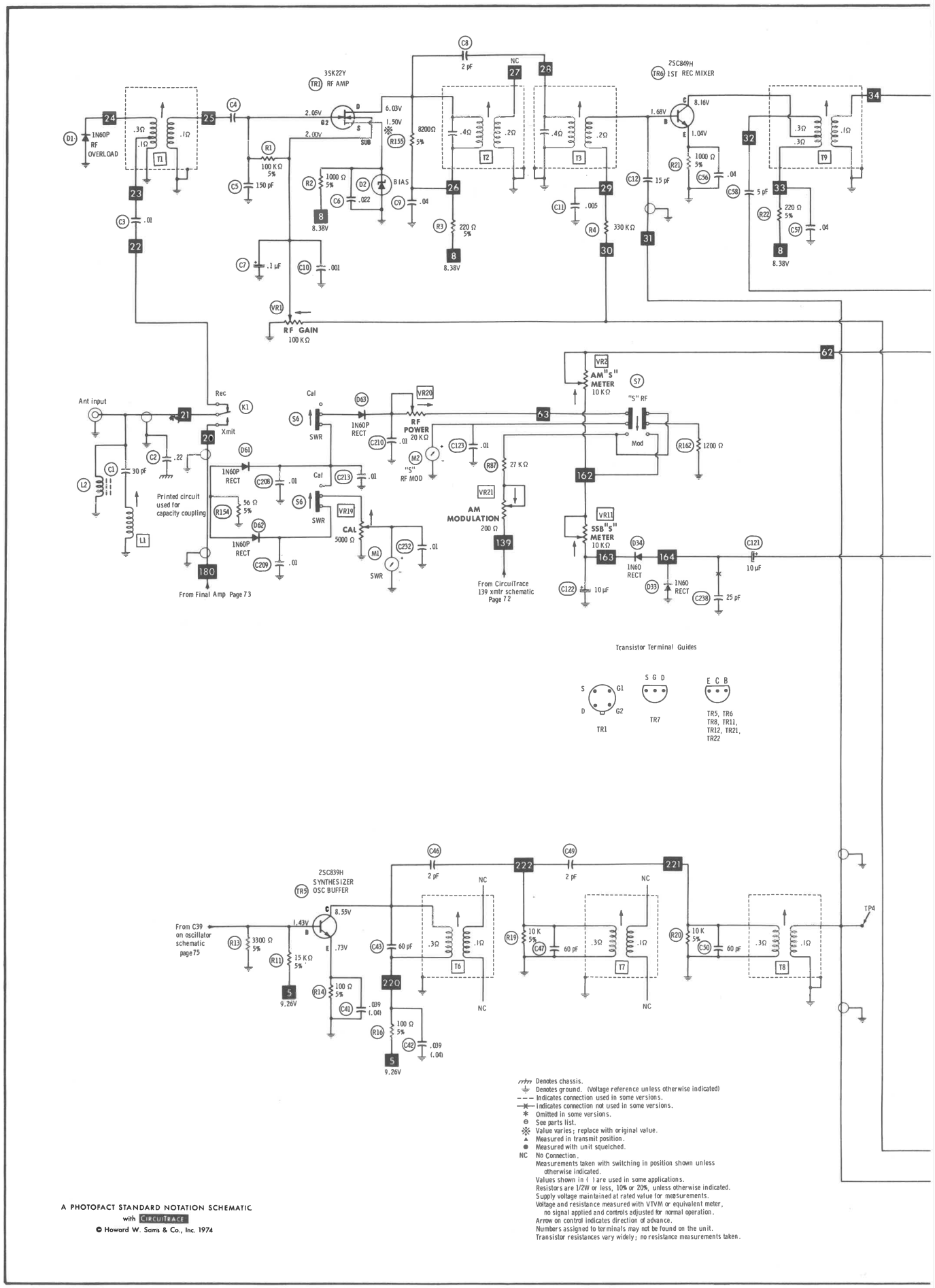

Denotes chassis.
Denotes ground. (Voltage reference unless otherwise indicated)
Indicates connection used in some versions.
Indicates connection not used in some versions.
* Omitted in some versions.
⊖ See parts list.
Value varies; replace with original value.
▲ Measured in transmit position.
● Measured with unit squelched.
NC No Connection.
Measurements taken with switching in position shown unless otherwise indicated.
Values shown in ( ) are used in some applications.
Resistors are 1/2W or less, 10% or 20%, unless otherwise indicated.
Supply voltage maintained at rated value for measurements.
Voltage and resistance measured with VTVM or equivalent meter, no signal applied and controls adjusted for normal operation.
Arrow on control indicates direction of advance.
Numbers assigned to terminals may not be found on the unit.
Transistor resistances vary widely; no resistance measurements taken.

A PHOTOFACT STANDARD NOTATION SCHEMATIC
with CIRCUITRACE

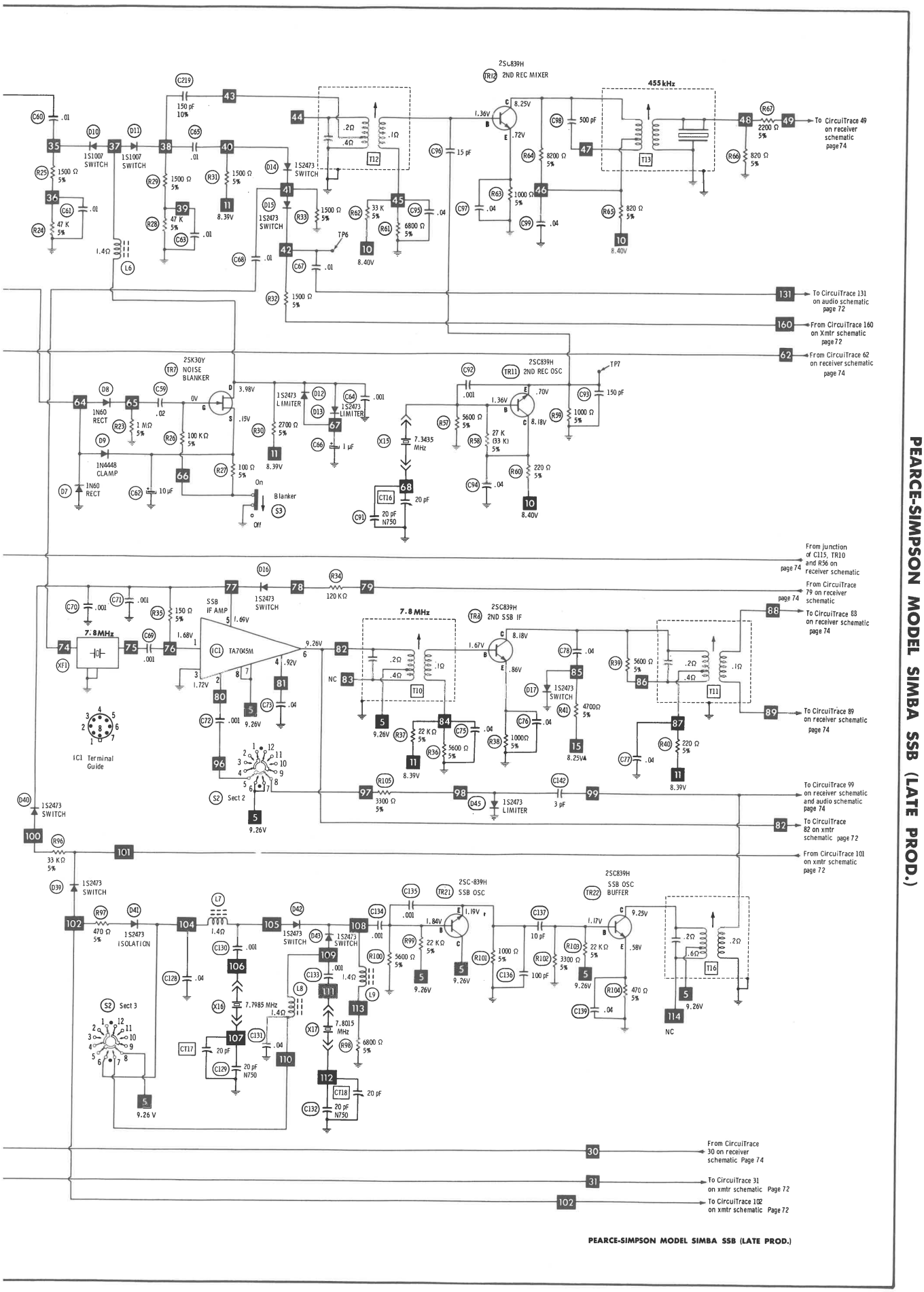

PEARCE-SIMPSON MODEL SIMBA SSB (LATE PROD.)

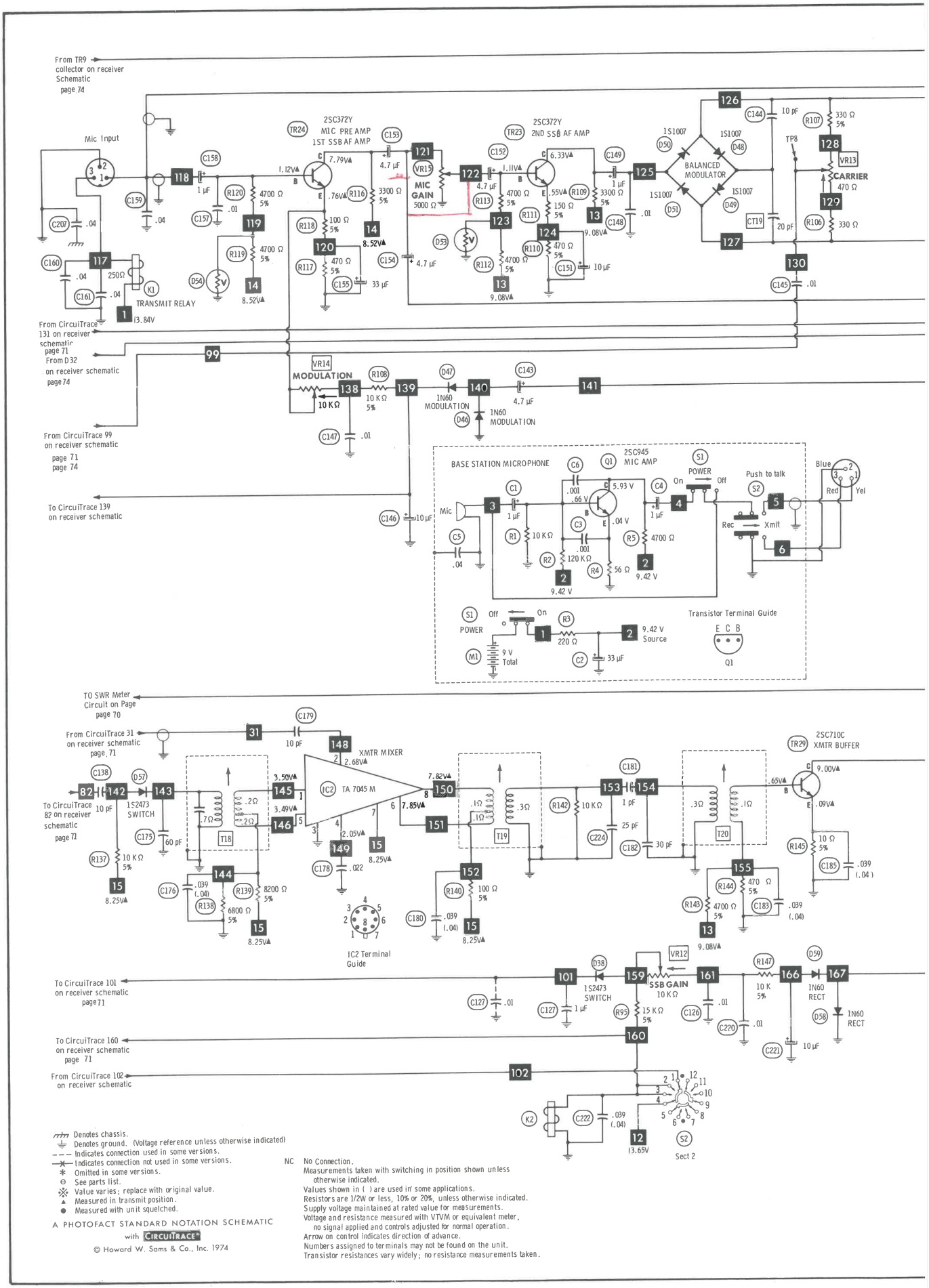

Denotes chassis.
Denotes ground. (Voltage reference unless otherwise indicated)
Indicates connection used in some versions.
Indicates connection not used in some versions.
Omitted in some versions.
See parts list.
Value varies; replace with original value.
Measured in transmit position.
Measured with unit squelched.

A PHOTOFACT STANDARD NOTATION SCHEMATIC with CIRCUITRACE®

NC No Connection.
Measurements taken with switching in position shown unless otherwise indicated.
Values shown in ( ) are used in some applications.
Resistors are 1/2W or less, 10% or 20%, unless otherwise indicated.
Supply voltage maintained at rated value for measurements.
Voltage and resistance measured with VTVM or equivalent meter, no signal applied and controls adjusted for normal operation.
Arrow on control indicates direction of advance.
Numbers assigned to terminals may not be found on the unit.
Transistor resistances vary widely; no resistance measurements taken.

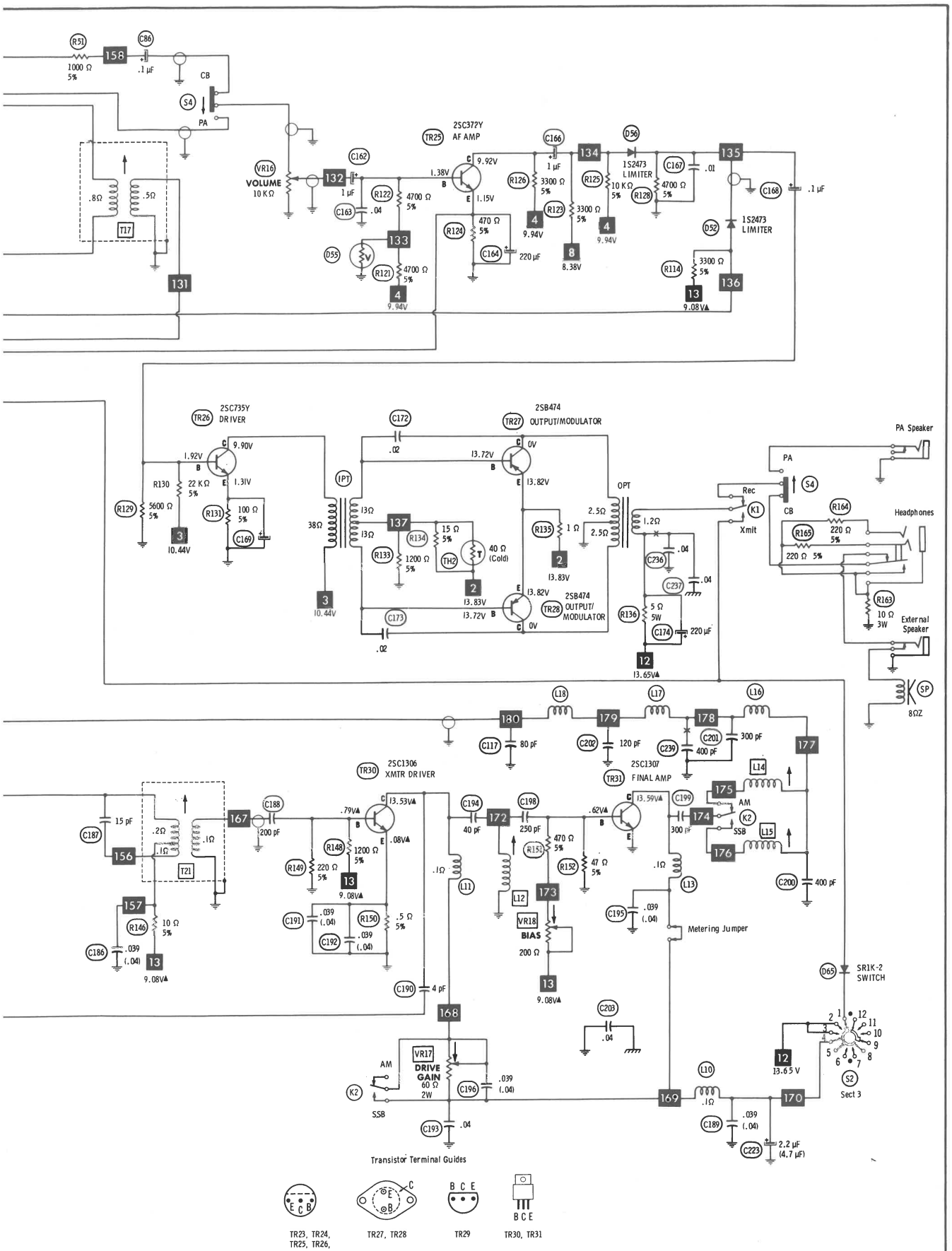

PEARCE-SIMPSON MODEL SIMBA SSB (LATE PROD.)

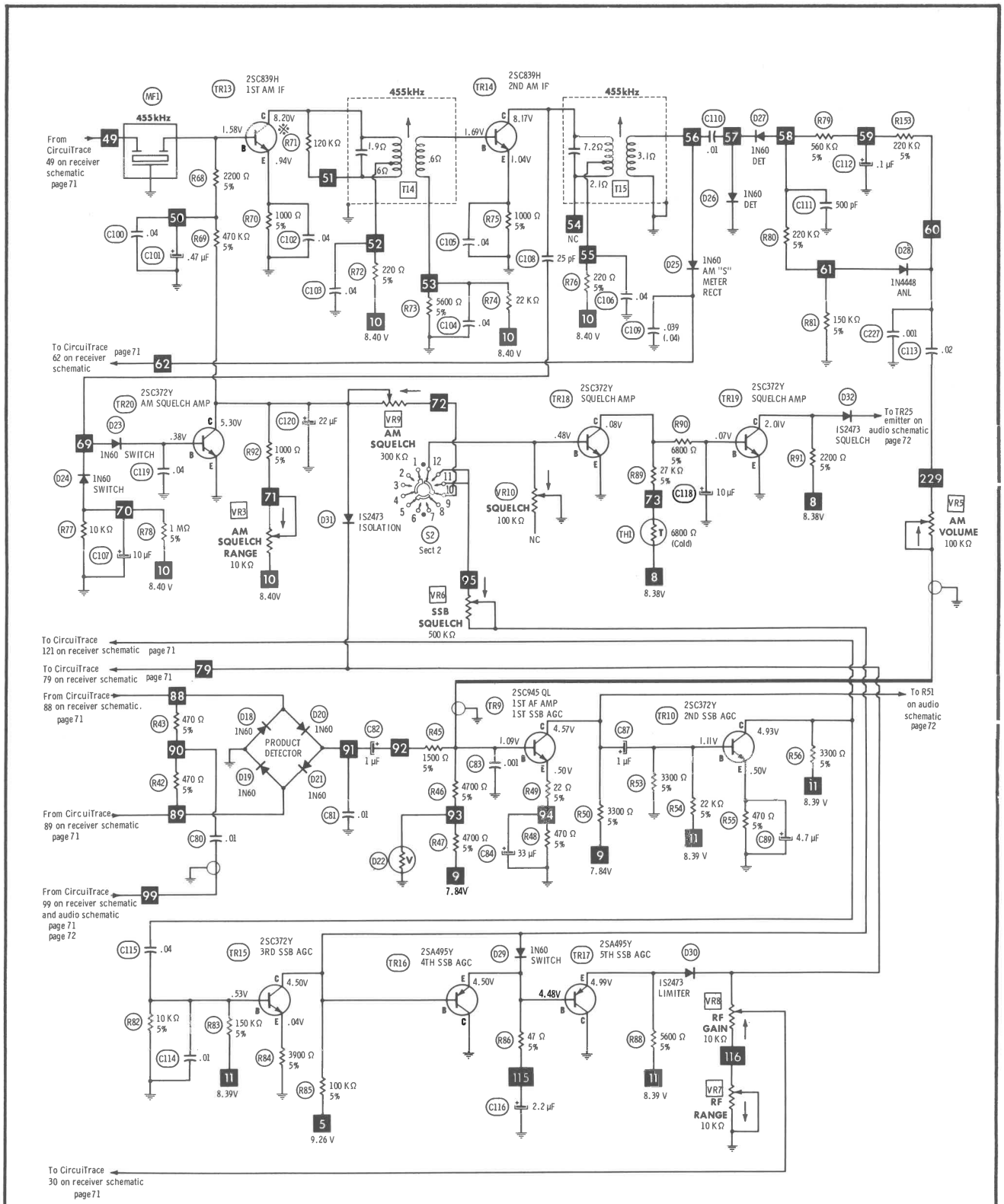

Denotes chassis.
Denotes ground. (Voltage reference unless otherwise indicated)
Indicates connection used in some versions.
Indicates connection not used in some versions.
Omitted in some versions.
See parts list.
Value varies; replace with original value.
Measured in transmit position.
Measured with unit squelched.
NC No Connection.

Measurements taken with switching in position shown unless otherwise indicated.
Values shown in ( ) are used in some applications.
Resistors are 1/2W or less, 10% or 20%, unless otherwise indicated.
Supply voltage maintained at rated value for measurements.
Voltage and resistance measured with VTVM or equivalent meter, no signal applied and controls adjusted for normal operation.
Arrow on control indicates direction of advance.
Numbers assigned to terminals may not be found on the unit.
Transistor resistances vary widely; no resistance measurements taken.

Transistor Terminal Guides

TR10, TR15, TR16, TR17, TR18, TR19,

TR9, TR13, TR14

A PHOTOFACT STANDARD NOTATION SCHEMATIC with CIRCUITRACE™

PEARCE-SIMPSON MODEL SIMBA SSB (LATE PROD.)

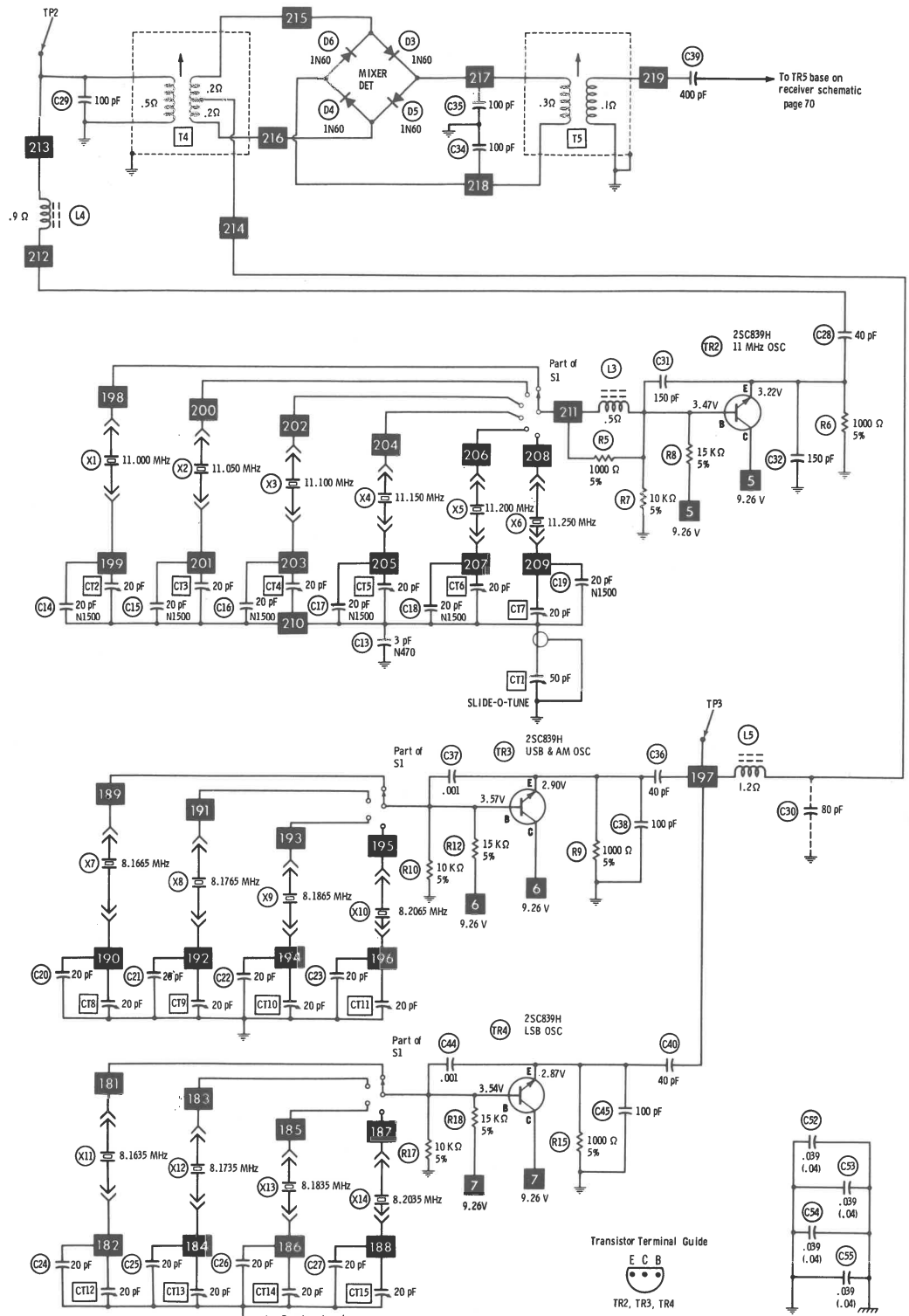

Denotes chassis.
Denotes ground. (Voltage reference unless otherwise indicated)
Indicates connection used in some versions.
Indicates connection not used in some versions.
Omitted in some versions.
See parts list.
Value varies; replace with original value.
Measured in transmit position.
Measured with unit squelched.
NC No Connection.

Measurements taken with switching in position shown unless otherwise indicated.
Values shown in ( ) are used in some applications.
Resistors are 1/2W or less, 10% or 20%, unless otherwise indicated.
Supply voltage maintained at rated value for measurements.
Voltage and resistance measured with VTVM or equivalent meter, no signal applied and controls adjusted for normal operation.
Arrow on control indicates direction of advance.
Numbers assigned to terminals may not be found on the unit.
Transistor resistances vary widely; no resistance measurements taken.

A PHOTOFACT STANDARD NOTATION SCHEMATIC
with CIRCUITRACE

PEARCE-SIMPSON MODEL SIMBA SSB (LATE PROD.)

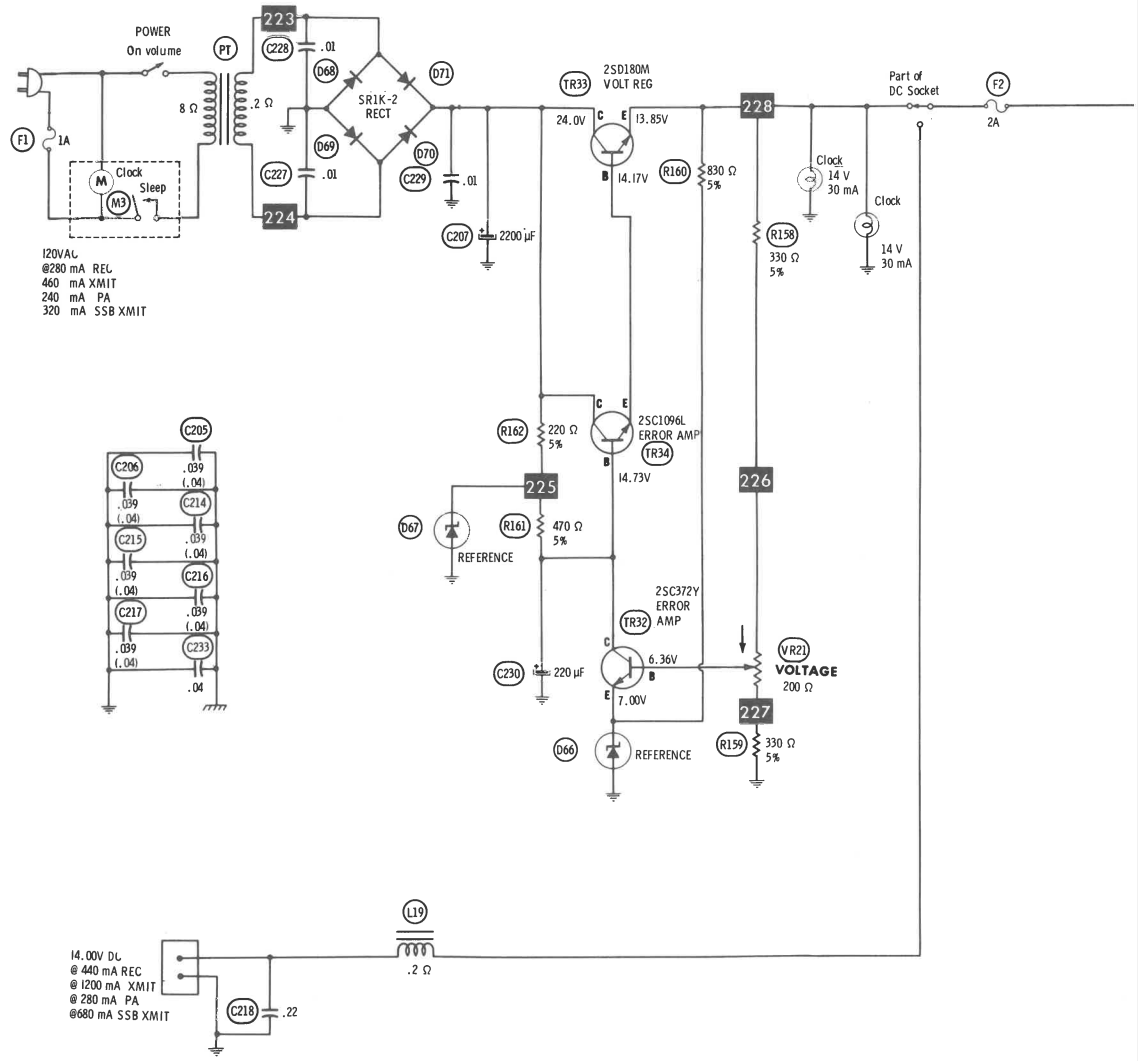

Denotes chassis.
Denotes ground. (Voltage reference unless otherwise indicated)
Indicates connection used in some versions.
Indicates connection not used in some versions.
Omitted in some versions.
See parts list.
Value varies; replace with original value.
Measured in transmit position.
Measured with unit squelched.
NC No Connection.
Measurements taken with switching in position shown unless otherwise indicated.
Values shown in ( ) are used in some applications.
Resistors are 1/2W or less, 10% or 20%, unless otherwise indicated.
Supply voltage maintained at rated value for measurements.
Voltage and resistance measured with VTVM or equivalent meter, no signal applied and controls adjusted for normal operation.
Arrow on control indicates direction of advance.
Numbers assigned to terminals may not be found on the unit.
Transistor resistances vary widely; no resistance measurements taken.

Transistor Terminal Guides

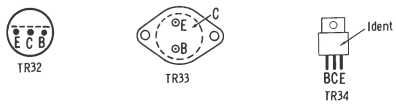

A PHOTOFACT STANDARD NOTATION SCHEMATIC
with CIRCUITRACE

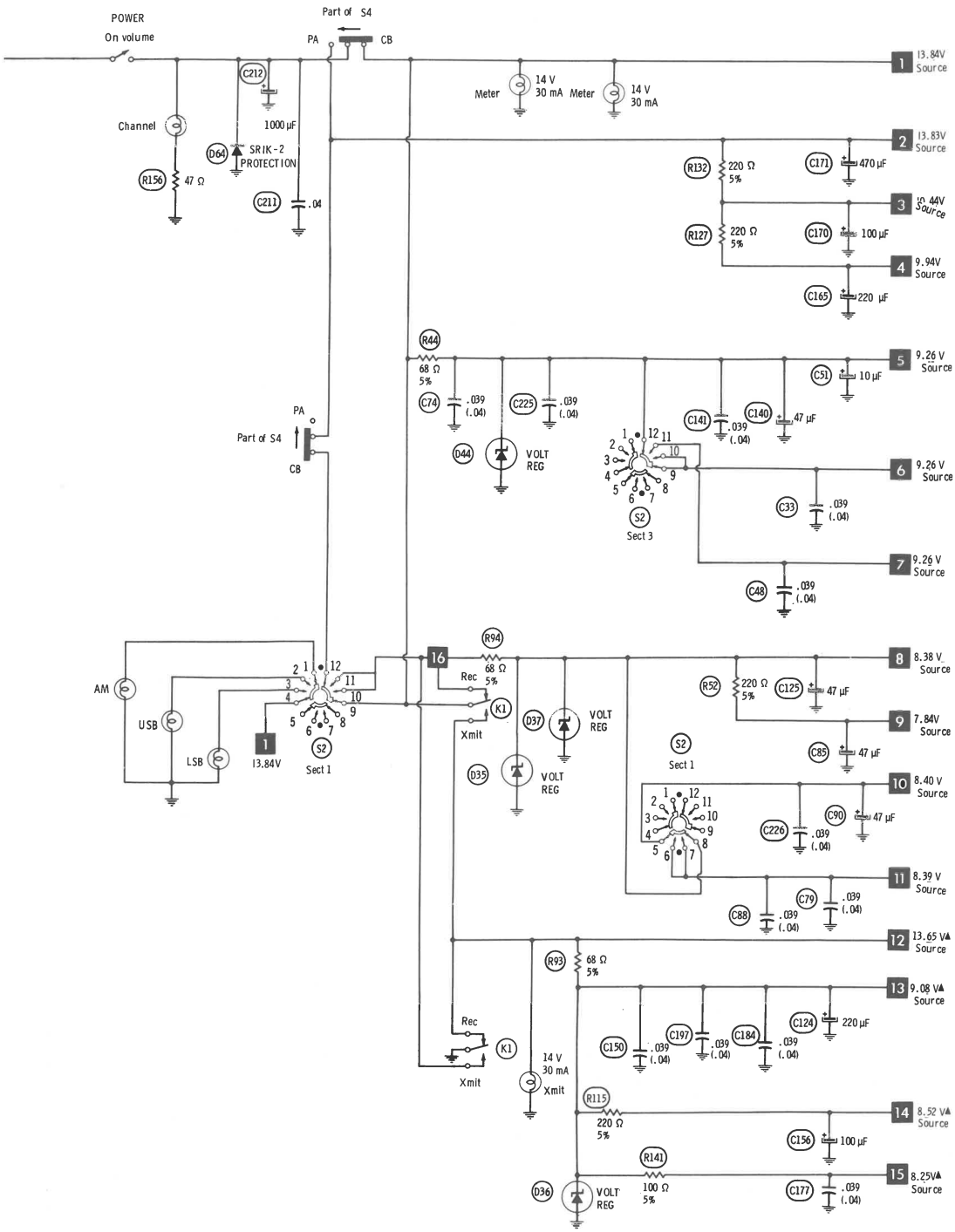

PEARCE-SIMPSON MODEL SIMBA SSB (LATE PROD.)

PARTS LIST AND DESCRIPTION

(When ordering parts, state Model, Part Number, and Description.)

SEMICONDUCTORS

ITEM No.	TYPE / MFGR. No./PART No.	REPLACEMENT DATA						
		GENERAL ELECTRIC PART No.	INTERNATIONAL RECTIFIER PART No.	MALLORY PART No.	MOTOROLA PART No.	RCA PART No.	SPRAGUE PART No.	SYLVANIA PART No.
D1	1N60P/5001-134	1N60	1N60	PTC206	HEP135	SK3088		ECG 109
D2	ZE1.5/5001-147 1.5 V Zener							
D3	1N60/5001-080	1N60	1N60	PTC206	HEP135	SK3088		ECG 109
D4	1N60/5001-080	1N60	1N60	PTC206	HEP135	SK3088		ECG 109
D5	1N60/5001-080	1N60	1N60	PTC206	HEP135	SK3088		ECG 109
D6	1N60/5001-080	1N60	1N60	PTC206	HEP135	SK3088		ECG 109
D7	1N60/5001-080	1N60	1N60	PTC206	HEP135	SK3088		ECG 109
D8	1N60/5001-080	1N60	1N60	PTC206	HEP135	SK3088		ECG 109
D9	1N4448/5001-146	GE-300	D200	PTC214	HEPR0602	SK3100	RT218	ECG 177
D10	IS1207/5001-120	GE-300	D200	PTC214	HEPR0602	SK3100	RT218	ECG 177
D11	IS1007/5001-120	GE-300	D200	PTC214	HEPR0602	SK3100	RT218	ECG 177
D12	IS2473/5001-128	GE-300	D200	PTC214	HEPR0602	SK3100	RT218	ECG 177
D13	IS2473/5001-128	GE-300	D200	PTC214	HEPR0602	SK3100	RT218	ECG 177
D14	IS2473/5001-128	GE-300	D200	PTC214	HEPR0602	SK3100	RT218	ECG 177
D15	IS2473/5001-128	GE-300	D200	PTC214	HEPR0602	SK3100	RT218	ECG 177
D16	IS2473/5001-128	GE-300	D200	PTC214	HEPR0602	SK3100	RT218	ECG 177
D17	IS2473/5001-128	GE-300	D200	PTC214	HEPR0602	SK3100	RT218	ECG 177
D18	1N60P/5001-134	1N60	1N60	PTC206	HEP135	SK3088		ECG 109
D19	1N60P/5001-134	1N60	1N60	PTC206	HEP135	SK3088		ECG 109
D20	1N60P/5001-134	1N60	1N60	PTC206	HEP135	SK3088		ECG 109
D21	1N60P/5001-134	1N60	1N60	PTC206	HEP135	SK3088		ECG 109
D23	1N60/5001-080	1N60	1N60	PTC206	HEP135	SK3088		ECG 109
D24	1N60/6001-080	1N60	1N60	PTC206	HEP135	SK3088		ECG 109
D25	1N60/5001-080	1N60	1N60	PTC206	HEP135	SK3088		ECG 109
D26	1N60/5001-080	1N60	1N60	PTC206	HEP135	SK3088		ECG 109
D27	1N60/5001-080	1N60	1N60	PTC206	HEP135	SK3088		ECG 109
D28	1N4448/5001-146	GE-300	D200	PTC214	HEPR0602	SK3100	RT218	ECG 177
D29	1N60/5001-080	1N60	1N60	PTC206	HEP135	SK3088		ECG 109
D30	IS2473/5001-128	GE-300	D200	PTC214	HEPR0602	SK3100	RT218	ECG 177
D31	IS2473/5001-128	GE-300	D200	PTC214	HEPR0602	SK3100	RT218	ECG 177
D32	IS2473/5001-128	GE-300	D200	PTC214	HEPR0602	SK3100	RT218	ECG 177
D33	1N60/5001-080	1N60	1N60	PTC206	HEP135	SK3088		ECG 109
D34	1N60/5001-080	1N60	1N60	PTC206	HEP135	SK3088		ECG 109
D35	WZ-081/5001-130 8.4 V Zener	GE-X11	Z1208	ZB8.2	HEPZ0411	SK3059	RT239	ECG 138
D36	BZ-090/5001-125 9.0 V Zener	GEZD-9.1	Z1208	PTC505	HEPZ0412	SK3060	RT240	ECG 139
D37	BZ-090/5001-125 9.0 V Zener	GEZD-9.1	Z1208	PTC505	HEPZ0412	SK3060	RT240	ECG 139
D38	IS2473/5001-128	GE-300	D200	PTC214	HEPR0602	SK3100	RT218	ECG 177
D39	IS2473/5001-128	GE-300	D200	PTC214	HEPR0602	SK3100	RT218	ECG 177
D40	IS2473/5001-128	GE-300	D200	PTC214	HEPR0602	SK3100	RT218	ECG 177
D41	IS2473/5001-128	GE-300	D200	PTC214	HEPR0602	SK3100	RT218	ECG 177
D42	IS2473/5001-128	GE-300	D200	PTC214	HEPR0602	SK3100	RT218	ECG 177
D43	IS2473/5001-128	GE-300	D200	PTC214	HEPR0602	SK3100	RT218	ECG 177
D44	BZ-090/5001-125 9.0 V Zener	GEZD-9.1	Z1208	PTC505	HEPZ0412	SK3060	RT240	ECG 139
D45	IS2473/5001-128	GE-300	D200	PTC214	HEPR0602	SK3100	RT218	ECG 177
D46	1N60/5001-080	1N60	1N60	PTC206	HEP135	SK3088		ECG 109
D47	1N60/5001-080	1N60	1N60	PTC206	HEP135	SK3088		ECG 109
D48	IS1007/5001-120	GE-300	D200	PTC214	HEPR0602	SK3100	RT218	ECG 177
D49	IS1007/5001-120	GE-300	D200	PTC214	HEPR0602	SK3100	RT218	ECG 177
D50	IS1007/5001-120	GE-300	D200	PTC214	HEPR0602	SK3100	RT218	ECG 177
D51	IS1007/5001-120	GE-300	D200	PTC214	HEPR0602	SK3100	RT218	ECG 177
D52	IS2473/5001-128	GE-300	D200	PTC214	HEPR0602	SK3100	RT218	ECG 177
D56	IS2473/5001-128	GE-300	D200	PTC214	HEPR0602	SK3100	RT218	ECG 177
D57	IS2473/5001-128	GE-300	D200	PTC214	HEPR0602	SK3100	RT218	ECG 177
D58	1N60/5001-080	1N60	1N60	PTC206	HEP135	SK3088		ECG 109
D59	1N60/5001-080	1N60	1N60	PTC206	HEP135	SK3088		ECG 109
D61	1N60P/5001-134	1N60	1N60	PTC206	HEP135	SK3088		ECG 109
D62	1N60P/5001-134	1N60	1N60	PTC206	HEP135	SK3088		ECG 109
D63	1N60/5001-080	1N60	1N60	PTC206	HEP135	SK3088		ECG 109
D64	SR1-K2/5001-129	GE-504A	8D4 or 5A4D	PTC201 or PTC202	HEPR0052	SK3030 or SK3031	RT213 or RT214	ECG 116 or ECG 117
D65	SR1-K2/5001-129	GE-504A	8D4 or 5A4D	PTC201 or PTC202	HEPR0052	SK3030 or SK3031	RT213 or RT214	ECG 116 or ECG 117
D66	WZ-061/ 6.3 V Zener	GEZD-6.2	Z-1204	PTC503	HEPZ0408	SK3058	RT237	ECG 137
D67	BZ-162/ 16.9 V Zener	GEZD-18	Z1216	PTC510	HEPZ0420			ECG 5076
D68	SR1-K2/5001-129	GE-504A	8D4 or 5A4D	PTC201 or PTC202	HEPR0052	SK3030 or SK3031	RT213 or RT214	ECG 116 or ECG 117
D69	SR1-K2/5001-129	GE-504A	8D4 or 5A4D	PTC201 or PTC202	HEPR0052	SK3030 or SK3031	RT213 or RT214	ECG 116 or ECG 117
D70	SR1-K2/5001-129	GE-504A	8D4 or 5A4D	PTC201 or PTC202	HEPR0052	SK3030 or SK3031	RT213 or RT214	ECG 116 or ECG 117
D71	SR1-K2/5001-129	GE-504A	8D4 or 5A4D	PTC201 or PTC202	HEPR0052	SK3030 or SK3031	RT213 or RT214	ECG 116 or ECG 117
IC1	TA-7045M/5002-001							ECG 724
IC2	TA-7045M/5002-001							ECG 724
TR1	3SK22Y/5001-046				HEPF2005	SK3116		ECG 220
TR2	2SC839H/5001-014	GE-20	TR-24	PTC123	HEP54	SK3122	RT100	ECG 108
TR3	2SC839H/5001-014	GE-20	TR-24	PTC123	HEP54	SK3122	RT100	ECG 108
TR4	2SC839H/5001-014	GE-20	TR-24	PTC123	HEP54	SK3122	RT100	ECG 108
TR5	2SC839H/5001-014	GE-20	TR-24	PTC123	HEP54	SK3122	RT100	ECG 108
TR6	2SC839H/5001-014	GE-20	TR-24	PTC123	HEP54	SK3122	RT100	ECG 108
TR7	2SK30Y/5001-047	GE-FET-2	FF-100	PTC152	HEPF0021	SK3116	RT175	ECG 132
TR8	2SC839H/5001-014	GE-20	TR-24	PTC123	HEP54	SK3122	RT100	ECG 108
TR9	2SC945QL/5001-038	GE-20	TR-24	PTC139	HEP724	SK3038	RT102	ECG 123A
TR10	2SC372Y/5001-020	GE-20	TR-24	PTC139	HEP55	SK3018	RT102	ECG 123
	2SC945R/ (1)	GE-20	TR-21	PTC136	HEP728	SK3124	RT102	ECG 123A
TR11	2SK339H/5001-014	GE-20	TR-24	PTC123	HEP54	SK3122	RT100	ECG 108
TR12	2SC839H/5001-014	GE-20	TR-24	PTC123	HEP54	SK3122	RT100	ECG 108
TR13	2SC839H/5001-014	GE-20	TR-24	PTC123	HEP54	SK3122	RT100	ECG 108
TR14	2SC839H/5001-014	GE-20	TR-24	PTC123	HEP54	SK3122	RT100	ECG 108
TR15	2SC372Y/5001-020	GE-20	TR-24	PTC139	HEP55	SK3018	RT102	ECG 123A
	2SC945R/ (1)	GE-20	TR-21	PTC136	HEP728	SK3124	RT102	ECG 123A
TR16	2SA495Y/5001-048	GE-21	TR-30	PTC103	HEP52	SK3114	RT115	ECG 159

PARTS LIST AND DESCRIPTION (CONTINUED)

(When ordering parts, state Model, Part Number, and Description.)

SEMICONDUCTORS(cont)

ITEM No.	TYPE / MFGR. No. / PART No.	REPLACEMENT DATA						
		GENERAL ELECTRIC PART No.	INTERNATIONAL RECTIFIER PART No.	MALLORY PART No.	MOTOROLA PART No.	RCA PART No.	SPRAGUE PART No.	SYLVANIA PART No.
TR17	2SA495Y/5001-048	GE-21	TR-30	PTC103	HEP52	SK3114	RT115	ECG 159
TR18	2SC372Y/5001-020	GE-20	TR-24	PTC139	HEP55	SK3018	RT102	ECG 123A
	2SC495R/ (1)	GE-20	TR-21	PTC136	HEP728	SK3124	RT102	ECG 123A
TR19	2SC372Y/5001-020	GE-20	TR-24	PTC139	HEP55	SK3018	RT102	ECG 123A
	2SC945R/ (1)	GE-20	TR-21	PTC136	HEP728	SK3124	RT102	ECG 123A
TR20	2SC372Y/5001-020	GE-20	TR-24	PTC139	HEP55	SK3018	RT102	ECG 123A
	2SC945R/ (1)	GE-20	TR-21	PTC136	HEP728	SK3124	RT102	ECG 123A
TR21	2SC839H/5001-014	GE-20	TR-24	PTC123	HEP54	SK3122	RT100	ECG 108
TR22	2SC839H/5001-014	GE-20	TR-24	PTC123	HEP54	SK3122	RT100	ECG 108
TR23	2SC372Y/5001-020	GE-20	TR-24	PTC139	HEP55	SK3018	RT102	ECG 123A
	2SC945R/ (1)	GE-20	TR-21	PTC136	HEP728	DK3124	RT102	ECG 123A
TR24	2SC372Y/5001-020	GE-20	TR-24	PTC139	HEP55	SK3018	RT102	ECG 123A
	2SC945R/ (1)	GE-20	TR-21	PTC136	HEP728	SK3124	RT102	ECG 123A
TR25	2SC372Y/5001-020	GE-20	TR-24	PTC139	HEP55	SK3018	RT102	ECG 123A
	2SC945R/ (1)	GE-20	TR-21	PTC136	HEP728	SK3124	RT102	ECG 123A
TR26	2SC735Y/5001-021	GE-63	TR-21	PTC123	HEP53	SK3018	RT102	ECG 123A
TR27	2SB474V10/5001-049	GE-31MP (6)	IRTR-94MP (6)	PTC120 (7)	HEP643 (7)	SK3068 (7)		ECG 226MP(6)
TR28	2SB474V10/5001-049							
TR29	2SC710C/5001-002	GE-17	TR-24	PTC121	HEP56	SK3018	RT108	ECG 107
TR30	2SC1306/5001-050	GE-28	IRTR-55	PTC110	HEPS3023	SK3054	RT154	ECG 186
TR31	2SC1307/5001-071	GE-66		PTC110				
TR32	2SC372Y/5001-020	GE-20	TR-24	PTC139	HEP55	SK3018	RT102	ECG 123A
	2SC945R/ (1)	GE-20	TR-21	PTC136	HEP728	SK3124	RT102	ECG 123A
TR33	2SD-180M/	GE-35	TR-26	PTC116	HEP247	SK3027	RT131	ECG 130
TR34	2SC1096L/	GE-28	IRTR-55	PTC110	HEP245	SK3041	RT133	ECG 186

(1) Used in some versions
(6) Matched Pair
(7) Two required -- select matched pair.

ELECTROLYTIC CAPACITORS

ITEM No.	RATING	REPLACEMENT DATA					
		MFGR. PART No.	ARCO PART No.	CENTRALAB PART No.	CORNELL-DUBILIER PART No.	MALLORY PART No.	SPRAGUE PART No.
C7	.1 25 V	5018-046				TDC104M050EL	SD35-R109
C51	10 16 V	5018-005	RME-B-E-010	EP15-10	PC10-25	VTT10A25	EV-1222
C62	10 16 V	5018-005	RME-B-E-010	EP15-10	PC10-25	VTT10A25	EV-1222
C66	1 50 V		RME-A-J-001	EP50-2	PC1-50	MTV1CB50	EV-1615
	(1 25 V)	5018-037	RME-A-G-001	EP30-2	PC1-50	MTV1CB50	EV-1315
C82	1 10 V					TDC105M035EL	SD35-19
C84	33 6.3 V					TDC336M010FL	SD36-339
C85	47 16 V	5018-034	RME-E-E-050	EP15-50	PC50-16	MTV50CB15	EV-1226
C86	.1 16 V					TDC104M050EL	SD35-109
C87	1 10 V					TDC105M035EL	SD35-19
C89	4.7 10 V					TDC475M010EL	SD10-4R79
C90	47 16 V	5018-034	RME-E-E-050	EP15-50	PC50-16	MTV50CB15	EV-1226
C101	.47 50 V	5018-038				TDC474M050EL	SD35-R479
C107	10 16 V	5018-005	RME-B-E-010	EP15-10	PC10-25	VTT10A25	EV-1222
C112	.1 25 V	5018-046				TDC104M050EL	SD35-R109
C116	2.2 35 V		RME-A-J-002	EP50-2	PC2-100	VTT2R2A50	EV-1517
	(2.2 16 V)	5018-048	RME-A-E-002	EP15-2	WBR2-50	VTT2R2A50	EV-1317
C117	4.7 25 V	5018-036	RME-A-G-005	EP30-5	PC5-50	VTT4R7A50	EV-1319
C118	10 16 V	5018-005	RME-B-E-010	EP15-10	PC10-25	VTT10A25	EV-1222
C120	22 16 V	5018-042	ME-2-E-020	EP15-25	PC20-50	VTT22A16	EV-1224
C121	10 16 V	5018-005	RME-B-E-010	EP15-10	PC10-25	VTT10A25	EV-1222
C122	10 16 V	5018-005	RME-B-E-010	EP15-10	PC10-25	VTT10A25	EV-1222
C124	220 16 V	5018-023	ME-6-E-200	EA15-250	PC200-16	MTV200DE15	EV-1240
C125	47 16 V	5018-034	RME-E-E-050	EP15-50	PC50-16	MTV50CB15	EV-1226
C127	1 50 V		RME-A-J-001	EP50-2	PC1-50	MTV1CB50	EV-1615
C140	47 16 V	5018-034	RME-E-E-050	EP15-50	PC50-16	MTV50CB15	EV-1226
C143	4.7 25 V	5018-026	RME-A-G-005	EP30-5	PC5-50	VTT4R7A50	EV-1319
C146	10 16 V	5018-005	RME-B-E-010	EP15-10	PC10-25	VTT10A25	EV-1222
C149	1 10 V		ME-1-D-001	EP15-2	PC1-50	MTV1CB50	EV-1315
C151	10 6.3 V					TDC106M025FL	SD20-109
C152	4.7 10 V					TDC475M010EL	SD10-4R79
C153	4.7 10 V					TDC475M010EL	SD10-4R79
C154	4.7 10 V					TDC475M010EL	SD10-4R79
C155	33 6.3 V					TDC336M010FL	SD6-339
C156	100 16 V	5018-012	RME-E-E-100	EP15-100	PC100-16	MTV100CD15	EV-1230
C158	1 10 V					TDC105M035EL	SD35-19
C162	1 10 V					TDC105M035EL	SD35-19
C164	220 6.3 V	5018-044	ME-6-B-200	EA6-250	PC200-10	MTV200DB10	EV-1140
	(220 16 V)	5018-023	ME-6-E-200	EA15-250	PC200-16	MTV200DE15	EV-1240
C165	220 16 V	5018-023	ME-6-E-200	EA15-250	PC200-16	MTV200DE15	EV-1240
C166	1 10 V					TDC125M035EL	SD35-19
C168	.1 16 V					TDC104M050EL	SD35-R109
C169	220 6.3 V	5018-044	ME-6-B-200	EA6-250	PC200-10	MTV200DB10	EV-1140
	(220 16 V)	5018-023	ME-6-E-200	EA15-250	PC200-16	MTV200DE15	EV-1240
C170	220 16 V	5018-023	ME-6-E-200	EA15-250	PC200-16	MTV200DE15	EV-1240
C171	470 16 V	5018-024	RME-L-E-500	EA15-500	PC500-16	MTV500DN15	EV-1250
C174	220 25 V	5018-033	ME-G200	EA30-250	PC200-35	MTV200DE25	EV-1340
C207	2200 25 V		ME-G2000		WBR2000-25	TC2520A	TVA-1213.5
C212	1000 25 V	5018-039	RME-P-G-1000	EA30-1000	WBR1000-25	MTA1000G25	EV-1360
C221	10 16 V	5018-005	RME-B-E-010	EP15-10	PC10-25	VTT10A25	EV-1222
C223	2.2 35 V		RME-A-J-002	EP50-2	PC2-100	VTT2R2A50	EV-1517
	(4.7 25 V)	5018-036	RME-A-G-005	EP30-5	PC5-50	VTT4R7A50	EV-1319
C230	220 16 V	5018-023	ME-6-E-200	EA15-250	PC200-16	MTV200DE15	EV-1240

( ) Used in some versions.

PARTS LIST AND DESCRIPTION (CONTINUED)

(When ordering parts, state Model, Part Number, and Description.)

CAPACITORS

ITEM No.	RATING		MFGR. PART No.	REPLACEMENT DATA				
				ARCO/ELMENCO PART No.	CENTRALAB PART No.	CORNELL-DUBILIER PART No.	MALLORY PART No.	SPRAGUE PART No.
C1	30	10%		DM-15-300J	CPR-30J		SX430	
C2	.22	50 V			CW40A224K		EPM1022	
C3	.01			CCD-103	CK-103	MGP01	TA110	TG-S10
C4	.001			CCD-102	DD-102	GP1000	SM210	2SS-D10
C5	150	10%		CCD-151	DD-151	GP150	GP315	10TS-T15
C6	.022			CCD-203	CK-203	MGP02	TA120	TG-S20
C8	2				DTZ-2R2	NP02P2	CN0522	10TCC-V22
C9	.039				DD-403		GP140	
C10	.001			CCD-102	DD-102	GP1000	SM210	2SS-D10
C11	.005			CCD-502	CK-502	MGP005	TA250	TG-D50
C12	15				DM-15-150J		SX415	
C13	3	N470		*			*	10TCT-V30
C14	20			CCT0-200	DTZ-20	NP020	CN0420	10TCC-Q20
C15	20			CCT0-200	DTZ-20	NP020	CN0420	10TCC-Q20
C16	20			CCT0-200	DTZ-20	NP020	CN0420	10TCC-Q20
C17	20			CCT0-200	DTZ-20	NP020	CN0420	10TCC-Q20
C18	20			CCT0-200	DTZ-20	NP020	CN0420	10TCC-Q20
C19	20			CCT0-200	DTZ-20	NP020	CN0420	10TCC-Q20
C20	20			CCT0-200	DTZ-20	NP020	CN0420	10TCC-Q20
C21	20			CCT0-200	DTZ-20	NP020	CN0420	10TCC-Q20
C22	20			CCT0-200	DTZ-20	NP020	CN0420	10TCC-Q20
C23	20			CCT0-200	DTZ-20	NP020	CN0420	10TCC-Q20
C24	20			CCT0-200	DTZ-20	NP020	CN0420	10TCC-Q20
C25	20			CCT0-200	DTZ-20	NP020	CN0420	10TCC-Q20
C26	20			CCT0-200	DTZ-20	NP020	CN0420	10TCC-Q20
C27	20			CCT0-200	DTZ-20	NP020	CN0420	10TCC-Q20
C28	40	10%					CN0439	10TCC-Q39
C29	100	10%		CCT0-101	DTZ-100	NP0100	CN0310	10TCC-T10
C30	80			CCT0-820	DTZ-82	NP082	CN0482	10TCC-Q82
C31	150			CCD-151	DD-151	GP150	GP315	10TS-T15
C32	150	10%		CCD-151	DD-151	GP150	GP315	10TS-T15
C33	.039				DD-403		GP140	
C34	100	10%		CCD-101	DD-101	GP100	GP310	10TS-T10
C35	100	10%		CCD-101	DD-101	GP100	GP310	10TS-T10
C36	40	10%					CN0439	10TCC-Q39
C37	.001			CCD-102	DD-102	GP1000	SM210	2SS-D10
C38	100	10%		CCD-101	DD-101	GP100	GP310	10TS-T10
C39	00	10%		CCD-391	DD-391	GP390	GP339	10TS-T39
C40	40	10%					CN0439	10TCC-Q39
C41	.039				DD-403		GP140	
C42	.039				DD-403		GP140	
C43	60	10%					CN0456	10TCC-Q56
C44	.001			CCD-102	DD-102	GP1000	SM210	2SS-D10
C45	100	10%		CCT0-101	DTZ-100	NP0100	CN0310	10TCC-T10
C46	2				DTZ-2R2	NP02P2	CN0522	10TCC-V22
C47	60	10%					CN0456	10TCC-Q56
C48	.039				DD-403		GP140	
C49	2				DTZ-2R2	NP02P2	CN0522	10TCC-V22
C50	60	10%					CN0456	10TCC-Q56
C52	.039				DD-403		GP140	
C53	.039				DD-403		GP140	
C54	.039				DD-403		GP140	
C55	.039				DD-403		GP140	
C56	.039				DD-403		GP140	
C57	.039				DD-403		GP140	
C58	5					NP05		10TCC-V50
C59	.02			CCD-203	CK-203	MGP02	TA120	TG-S20
C60	.01			CCD-103	CK-103	MGP01	TA110	TG-S10
C61	.01			CCD-103	CK-103	MGP01	TA110	TG-S10
C63	.01			CCD-103	CK-103	MGP01	TA110	TG-S10
C64	.001			CCD-102	DD-102	GP1000	SM210	2SS-D10
C65	.01			CCD-103	CK-103	MGP01	TA110	TG-S10
C67	.01			CCD-103	CK-103	MGP01	TA110	TG-S10
C68	.01			CCD-103	CK-103	MGP01	TA110	TG-S10
C69	.001			CCD-102	DD-102	GP1000	SM210	2SS-D10
C70	.001			CCD-102	DD-102	GP1000	SM210	2SS-D10
C71	.001			CCD-102	DD-102	GP1000	SM210	2SS-D10
C72	.001			CCD-102	DD-102	GP1000	SM210	2SS-D10
C73	.04				DD-403		GP140	
C74	.04				DD-403		GP140	
C75	.039				DD-403		GP140	
C76	.04				DD-403		GP140	
C77	.039				DD-403		GP140	
C78	.039				DD-403		GP140	
C79	.04				DD-403		GP140	
C80	.01			CCD-103	CK-103	MGP01	TA110	TG-S10
C81	.018			CCD-203	CK-203	MGP02	TA120	TG-S20
C83	.001			CCD-102	DD-102	GP1000	SM210	2SS-D10
C88	.04				DD-403		GP140	
C91	20	N750		*	DTN-20	N20	CN7420	10TCU-Q20
C92	.001			CCD-102	DD-102	GP1000	SM210	2SS-D10
C93	150	10%		CCD-151	DD-151	GP150	GP315	10TS-T15
C94	.039				DD-403		GP140	
C95	.039				DD-403		GP140	
C96	15	10%		DM-15-150J			SX415	
C97	.039				DD-403		GP140	
C98	500	10%		DM-19-501J	CPR-510J	CD15FD511J03	SX351	424ME5100J501
C99	.039				DD-403		GP140	
C100	.039				DD-403		GP140	
C102	.039				DD-403		GP140	
C103	.039				DD-403		GP140	
C104	.039				DD-403		GP140	
C105	.039				DD-403		GP140	
C106	.039				DD-403		GP140	
C108	25	10%			DTZ-25		CN0425	10TCC-Q25
C109	.039				DD-403		GP140	
C110	.01			CCD-103	CK-103	MGP01	TA110	TG-S10
C111	500	10%		CCD-501	DD-501	GP500	GP350	10TS-T50
C113	.02			CCD-203	CK-203	MGP02	TA120	TG-S20

PARTS LIST AND DESCRIPTION (CONTINUED)

(When ordering parts, state Model, Part Number, and Description.)

CAPACITORS (cont)

ITEM No.	RATING		MFGR. PART No.	REPLACEMENT DATA				
				ARCO/ELMENCO PART No.	CENTRALAB PART No.	CORNELL-DUBILIER PART No.	MALLORY PART No.	SPRAGUE PART No.
C114	.018			CCD-203	CK-203	MGP02	TA120	TG-S20
C115	.039				DD-403		GP140	
C117	80	10%		DM-15-820J	CPR-82J	CD15ED820J03	SX482	424MC82R0J501
C119	.039				DD-403		GP140	
C123	.01			CCD-103	CK-103	MGP01	TA110	TG-S10
C126	.01			CCD-103	CK-103	MGP01	TA110	TG-S10
C128	.039				DD-403		GP140	
C129	20	N750		*	DTN-20	N20	CN7420	10TCU-Q20
C130	.001			CCD-102	DD-102	GP1000	SM210	2SS-D10
C131	.039				DD-403		GP140	
C132	20	N750		*	DTN-20	N20	CN7420	10TCU-Q20
C133	.001			CCD-102	DD-102	GP1000	SM210	2SS-D10
C134	.001			CCD-102	DD-102	GP1000	SM210	2SS-D10
C135	.001			CCD-102	DD-102	GP1000	SM210	2SS-D10
C136	100	10%		CCD-101	DD-101	GP100	GP310	10TS-T10
C137	10			CCT0-100	DTZ-10	NP010	CN0410	10TCC-Q10
C138	10			CCT0-100	DTZ-10	NP010	CN0410	10TCC-Q10
C139	.039				DD-403		GP140	
C141	.039				DD-403		GP140	
C142	6							10TCC-V56
C144	10			CCT0-100	DTZ-10	NP010	CN0410	10TCC-Q10
C145	.01			CCD-103	CK-103	MGP01	TA110	TG-S10
C147	.01			CCD-103	CK-103	MGP01	TA110	TG-S10
C148	.01			CCD-103	CK-103	MGP01	TA110	TG-S10
C150	.039				DD-403		GP140	
C157	.01			CCD-103	CK-103	MGP01	TA110	TG-S10
C159	.04				DD-403		GP140	
C160	.04				DD-403		GP140	
C161	.039				DD-403		GP140	
C163	.039				DD-403		GP140	
C167	.01			CCD-103	CK-103	MGP01	TA110	TG-S10
C172	.02			CCD-203	CK-203	MGP02	TA120	TG-S20
C173	.02			CCD-203	CK-203	MGP02	TA120	TG-S20
C175	50	10%		CCT0-510	DTZ-50	NP050	CN0450	10TCC-Q50
C176	.039				DD-403		GP140	
C177	.039				DD-403		GP140	
C178	.02			CCD-203	CK-203	MGP02	TA120	TG-S20
C179	5					NP05		10TCC-V50
C180	.039				DD-403		GP140	
C181	1						CN0510	10TCC-V10
C182	30	10%		CCT0-300				10TCC-Q30
C183	.039				DD-403		GP140	
C184	.039				DD-403		GP140	
C185	.04				DD-403		GP140	
C186	.039				DD-403		GP140	
C187	30	10%		CCT0-300				10TCC-Q30
C188	200	10%		DM-19-201J	CPR-200J	CD15FD201J03	SX320	424ME2000J501
C189	.039				DD-403		GP140	
C190	4					NP03P9		10TCC-V39
C191	.039				DD-403		GP140	
C192	.039				DD-403		GP140	
C193	.039				DD-403		GP140	
C194	40	10%		DM-15-390J	CPR-39J	CD15ED390J03	SX439	MS44
C195	.039				DD-403		GP140	
C196	.039				DD-403		GP140	
C197	.039				DD-403		GP140	
C198	250	10%		CCD-270	DD-271	GP270	GP327	10TS-T27
C199	300	10%		DM-19-301J	CPR-300J	CD15FD301J03	SX330	424ME3000J501
C200	400	10%						MS-34
C201	300	10%		DM-19-301J	CPR-300J	CD15FD301J03	SX330	424ME3000J501
C202	120	10%		CCT0-101	DTZ-100	NP0100	CN0310	10TCC-T10
C203	.04				DD-403		GP140	
C204	.039				DD-403		GP140	
C205	.039				DD-403		GP140	
C206	.04				DD-403		GP140	
C207	.04				DD-403		GP140	
C208	.01			CCD-103	CK-103	MGP01	TA110	TG-S10
C209	.01			CCD-103	CK-103	MGP01	TA110	TG-S10
C210	.01			CCD-103	CK-103	MGP01	TA110	TG-S10
C211	.039				DD-403		GP140	
C213	.01			DM-30-103J	CPR-10000J		SX110	
C214	.039				DD-403		GP140	
C215	.039				DD-403		GP140	
C216	.039				DD-403		GP140	
C217	.039				DD-403		GP140	
C218	.22	50 V			CW40A224K		EPM1022	
C219	150	10%		DM-15-151J	CPR-150J	CD15FD151J03	SX315	424MC1500J 01
C220	.01			CCD-103	CK-103	MGP01	TA110	TG-S10
C222	.039				DD-403		GP140	
C224	25	10%			DTZ-25		CN0425	10TCC-Q25
C225	.04				DD-403		GP140	
C226	.039				DD-403		GP140	
C227	.01			1DP-1-103	CPR-10000J	DPMS6S1	EWF1A110	225P10391WD3
C228	.01			1DP-1-103	CPR-10000J	DPMS6S1	EWF1A110	225P10391WD3
C229	.01			CCD-103	CK-103	MGP01	TA110	TG-S10
C231	.01			CCD-103	CK-103	MGP01	TA110	TG-S10
C232	.01			CCD-103	CK-103	MGP01	TA110	TG-S10
C233	.04				DD-403		GP140	
C234	.01			CCD-103	CK-103	MGP01	TA110	TG-S10
C235	.068			CCD-503	CK-503	MGP05	TA150	TG-S50
C236	.04				DD-403		GP140	
C237	.04				DD-403		GP140	
C238	25	10%			DTZ-25		CN0425	10TCC-Q25
C239	400	10%						MS-34
CT1	50		5016-003					
CT2	20		5016-004					
CT3	20		5016-004					
CT4	20		5016-004					
CT5	20		5016-004					

PARTS LIST AND DESCRIPTION (CONTINUED)

(When ordering parts, state Model, Part Number, and Description.)

CAPACITORS (cont)

ITEM No.	RATING	MFGR. PART No.	REPLACEMENT DATA				
			ARCO/ELMENCO PART No.	CENTRALAB PART No.	CORNELL-DUBILIER PART No.	MALLORY PART No.	SPRAGUE PART No.
CT6	20	5016-004					
CT7	20	5016-004					
CT8	20	5016-004					
CT9	20	5016-004					
CT10	20	5016-004					
CT11	20	5016-004					
CT12	20	5016-004					
CT13	20	5016-004					
CT14	20	5016-004					
CT15	20	5016-004					
CT16	20	5016-004					
CT17	20	5016-004					
CT18	20	5016-004					
CT19	20	5016-004					
CT20	150	5016-004					

* Not normally in distributor's stock. Available thru distributor on order to manufacturer.

CONTROLS (All wattages 1/2 watt, or less, unless listed)

ITEM No.	FUNCTION	RESIST-ANCE	REPLACEMENT DATA				
			MFGR. PART No.	CENTRALAB PART No.	CLAROSTAT PART No.	CTS—IRC PART No.	MALLORY PART No.
VR1	RF Gain	100 K	5008-030	TSV-100K or T-100K	C-104	X201R104B	MTC15L1
VR2	AM "S" Meter	10 K	5008-007	TSV-10K (1) or T-10K (1)	C-103 (1)	X201R103B (1)	MTC14L1 (1)
VR3	AM Squelch Range	10 K	5008-007	TSV-10K (1) or T-10K (1)	C-103 (1)	X201R103B (1)	MTC14L1 (1)
VR4	Voltage	200	5008-036	T-200 (1) or T-250 (1)		X201R201B (1)	MTC22L1 (1)
VR5	AM Volume	100 K	5008-031	TSV-100K (1) or T-100K (1)	C-104 (1)	X201R104B (1)	MTC15L1 (1)
VR6	SSB Squelch	500 K	5008-063	TSV-500K (1) or T 500K (1)	C-504 (1)	X201R504B (1)	MTC55L1 (1)
VR7	RF Range	10 K	5008-007	TSV-10K (1) or T-10K (1)	C-103 (1)	X201R103B (1)	MTC14L1 (1)
VR8	RF Gain	10K	5008-038	F1-10K, SSK100	A47-10K-S, KSS-3 or [NP-10K-S, UP-C-400]	BU1,CF9, SS1,DC1	UA14L,SK1000 or [RU14L,SL38,SK1000] or U20
VR9	AM Squelch	300 K	5008-066	TSV-500K (1) or T-500K (1)	C-504 (1)	X201R504B (1)	MTC3253L1 (1)
VR10	Squelch	100 K	5008-039	F1-100K, SSK108	A47-100K-S,KSS-3 or [NP-100K-S, UP-C-400]	BU1,CF13, SS1,DC1	UA15L,SK1000 or [RU15L,SL38,SK1000] or U41
VR11	SSB "S" Meter	10 K	5008-007	TSV-10K (1) or T-10K (1)	C-103 (1)	X201R103B (1)	MTC14L1 (1)
VR12	SSB Gain	10 K	5008-007	TSV-10K (1) or T-10K (1)	C-103 (1)	X201R103B (1)	MTC14L1 (1)
VR13	Carrier	470	5008-034	TSV-500 (2) or T-500 (2)	C-501 (2)	X201R103B (2)	MTC52L1 (2)
VR14	Modulation	10 K	5008-007	TSV-10K (1) or T-10K (1)	C-103 (1)	X201R103B (1)	MTC14L (1)
VR15	Mike Gain	5000	5008-037	F1-5000, SSK100	A47-5000-S,KSS-3 or [NP-5000-S, UP-C-400]	BU1,CF8, SS1,DC1	UA53L,SK1000 or [RU53L,SL38,SK1000] or U41
VR16	Volume/Switch	10 K	5008-040	F2-10K, SSK100,KR-2	A47-10K-Z, KSS-3,SWE-20 or [NP-10K-Z, UP-C-400,NWE-20]	BU1,CF61, SS1,VF	UA14A,SK1000,US43 or [RU14A,SL38, SK1000,US43] or [U18,US28]
VR17	Driver Gain	60 2W,WW	5008-035	WP-100 or V-60		P117R500A or 110-60	MR100P
VR18	Bias	200	5008-036	T-200 (1) or TSV-250 (1)		X201R251B (1)	MTC251L1 (1)
VR19	Cal	5000	5008-037	F1-5000, SSK100	A47-5000-S,KSS-3 or [NP-5000-S, UP-C-400]	BU1,CF8, SS1,DC1	UA53L,SK1000 or [RU53L,SL38,SK1000] or U14
VR20	RF Power	20 K		T-20K (1) or TSV-25K (1)	C-253 (1)	X201R253B (1)	MTC24L1 (1)
VR21	AM Modulation	200	5008-036	T-200 (1) or TSV-250 (1)		X201R201B (1)	MTC22L1 (1)

(1) Cut off one of the end terminals and bend to fit PC board.
(2) For horizontal mounting, bend the two outside terminals to fit PC board. Use jumper to connect center terminal to PC board.

RESISTORS (Power and Special)

ITEM No.	RATING	REPLACEMENT DATA	
		WORKMAN PART No.	MFGR. PART No.
R135	1 1W		5019-006
R136	50 5W		
R150	.5 1/4W		
R157	10 3W		
TH1	Thermistor		5001-150

ITEM No.	RATING	REPLACEMENT DATA	
		WORKMAN PART No.	MFGR. PART No.
TH2	Thermistor		5001-151
D22	Varistor		5001-122
D53	Varistor		5001-122
D54	Varistor		5001-122
D55	Varistor		5001-122

PARTS LIST AND DESCRIPTION (CONTINUED)

(When ordering parts, state Model, Part Number, and Description.)

COILS (RF-IF)

ITEM No.	USE	REPLACEMENT DATA			
		PART No.	MEISSNER PART No.	MILLER PART No.	REMARKS
L1	TVI Trap	5006-042			
L2	RF Choke (20 uH)	5006-139	19-6022	74F225AI	
L3	RF Choke (3.9 uH)	5006-140	19-1003	74F396AP	
L4	RF Choke (8.2 uH)	5006-145	19-2015	74F826AP	
L5	RF Choke (10 uH)	5006-146	19-2017	74F105AP	
L6	Peaking (100 uH)	5006-141	19-2025	74F104AI	
L7	Peaking (100 uH)	5006-141	19-2025	74F104AI	
L8	Peaking (100 uH)	5006-141	19-2025	74F104AI	
L9	Peaking (100 uH)	5006-141	19-2025	74F104AI	
L10	RF Choke (1.2 uH)	5006-142	19-2009	74F106AP	
L11	RF Choke (1.2 uH)	5006-142	19-2009	74F106AP	
L12	RF Choke (Adj)	5006-116			
L13	RF Choke (1.2 uH)	5006-142	19-2009	74F106AP	
L14	AM Antenna (Adj)	5006-116			
L15	SSB Antenna (Adj)	5006-116			
L16	Pi Filter	5006-116			
L17	Pi Filter	5006-116			
L18	Pi Filter	5006-116			
L19	RF Choke (15 turns)	5006-144			
T1	Rec. Antenna	5006-125			
T2	Rec. RF	5006-126			
T3	Rec. RF	5006-126			
T4	Input Mixer	5006-127			
T5	Output Mixer	5006-128			
T6	Harmonic Suppressor	5006-128			
T7	Harmonic Suppressor	5006-128			
T8	Oscillator Buffer	5006-128			
T9	1st Mixer Output	5006-147			
T10	7.8 MHz SSB IF	5006-131			
T11	7.8 MHz SSB IF	5006-131			
T12	2nd Mixer Input	5006-131			
T14	Interstage IF	5006-078	16-9034	8811	
T15	Output IF	5006-079	16-9035	8812	
T16	Carrier Oscillator	5006-133			
T17	Output Mixer	5006-134			
T18	Xmtr. SSB IF	5006-135			
T19	Xmtr. SSB 1st Mixer	5006-136			
T20	Xmtr. SSB 2nd Mixer	5006-137			
T21	Xmtr. SSB Buffer	5006-138			

TRANSFORMER (Driver)

ITEM No.	TURNS RATIO			REPLACEMENT DATA				NOTES
	PRI.	SEC. 1	SEC. 2	MFGR. PART No.	STANCOR PART No.	THORDARSON PART No.	TRIAD Part No.	
IPT	1.0	1.0		5007-021 (7258)				

TRANSFORMER (Audio Output)

ITEM No.	IMPEDANCE		REPLACEMENT DATA				NOTES
	PRI.	SEC.	MFGR. PART No.	STANCOR PART No.	THORDARSON PART No.	TRIAD PART No.	
OPT	32	8	5007-022 [7274]				

TRANSFORMER (Power)

ITEM No.	RATING		REPLACEMENT DATA				NOTES
	PRI.	SEC. 1	MFGR. PART No.	STANCOR PART No.	THORDARSON PART No.	TRIAD PART No.	
PT	120 VAC @ 280 mA AC (1) 460 mA AC (2) 225 mA AC (3)	19 VAC, CT @ 280 mA DC (1) 460 mA DC (2) 320 mA DC (3)	5007-023 [PT-103-0]				(1) Rec. (2) AM Xmit (3) SSB Xmit

SPEAKER

ITEM No.	TYPE	REPLACEMENT DATA		NOTES
		MFGR. PART No.	QUAM PART No.	
SP1	4" PM 8 ohms	5012-008 [EAS-10P03S]	4A1Z8	

PARTS LIST AND DESCRIPTION (CONTINUED)

(When ordering parts, state Model, Part Number, and Description.)

FUSE DEVICES

ITEM No.	DESCRIPTION	REPLACEMENT DATA						
		PART No.		BUSS PART No.		LITTELFUSE PART No.		WORKMAN PART No.
		DEVICE	HOLDER	DEVICE	HOLDER	DEVICE	HOLDER	DEVICE
F1	1 A, 250 V, Fast Acting		5029-001	AG1	HKP	312001	342104	FG1-2
F2	2 A, 125 V, Slo-Blo	5028-001	5029-001	MDL-2	HKP	313002	342104	

MISCELLANEOUS

ITEM No.	PART NAME	PART No.	NOTES
K1	Relay	5024-004 [AE-3244-5]	Xmit/Rec (w/Socket)
K2	Relay	5024-005 [MT-2]	AM/SSB
M1	Meter	5014-011	SWR
M2	Meter	5014-010	"S"/RF
M3	Clock	5009-024	
MF1	Ceramic Filter	5023-005	455 kHz
S1	Switch	5009-020	Channel Selector
S2	Switch	5009-021	AM/USB LSB
S3	Switch	5009-025	Blanker (On-Off)
S4	Switch	5009-026	CB/PA
S6	Switch	5009-026	Cal (On-Off)
S7	Switch	5009-026	"S"/RF-Mod.
X1	Crystal	5003-058	11.000 MHz
X2	Crystal	5003-059	11.050 MHz
X3	Crystal	5003-060	11.100 MHz
X4	Crystal	5003-061	11.150 MHz
X5	Crystal	5003-062	11.200 MHz
X6	Crystal	5003-063	11.250 MHz
X7	Crystal	5003-064	8.1665 MHz
X8	Crystal	5003-065	8.1765 MHz
X9	Crystal	5003-066	8.1865 MHz
X10	Crystal	5003-067	8.2065 MHz
X11	Crystal	5003-068	8.1635 MHz
X12	Crystal	5003-069	8.1735 MHz
X13	Crystal	5003-070	8.1835 MHz
X14	Crystal	5003-071	8.2035 MHz
X15	Crystal	5003-072	7.3435 MHz
X16	Crystal	5003-073	7.7985 MHz
X17	Crystal	5003-074	7.8015 MHz
XF-1	Crystal Filter	5023-008	7.8 MHz

CABINETS & CABINET PARTS (When ordering specify model, chassis & color)

ITEM	PART No.
Cabinet, Bottom	5020-026
Cabinet, Top	5020-025
Chassis	
Knob, Channel Selector	5022-025
Knob, Cal/Mic Gain/RF Gain, Squelch/Volume	5022-029
Knob, AM-USB-LSB, Slide-O-Tune	5022-030
Knob, Blanker/CB-PA.Cal, S-RF/Mod	5022-033

ITEM	PART No.
Knob, Clock (Time, Alarm Set, On-Off-Auto-Alarm)	5022-031
Knob, Clock (Sleep)	5022-032
Panel, Clock	5020-027
Panel, Front	5020-024
Plate, Front (Wood Grain)	5027-030

ACCESSORIES

ITEM	MFGR. PART No.	REMARKS
Microphone	5004-011	(Complete)
Power Plug, DC	5010-034	

WIRING DATA

General-use Hook-up Wire ..... Use BELDEN No. 8530 (Solid) Available in 12 Colors
8524 (Stranded) Available in 12 Colors

Shielded Antenna Lead ..... Use BELDEN No. 8214 Lowest-loss (RG-8/U Type)
8237 Low-loss (RG-8/U)
8240 (Solid) Miniature (RG-58/U)
8259 (Stranded) Miniature (RG-58A/U)

Coiled Microphone Cable ..... Use BELDEN No. 8497 3-Conductor,1 Shielded,for Press-to-Talk (Neoprene)
8496 3-Conductor,1 Shielded,for Press-to-Talk (Vinyl)

Ignition Noise Suppression ..... Use BELDEN No. 7300-Series Spark-Plug Sets

Bonding Strap ..... Use BELDEN No. 8661 (3/8 In.)

For Supplier Address See PHOTOFACT Index

NOTE

ONLY THOSE PERSONS PROPERLY LICENSED ARE PERMITTED TO MAKE REPAIRS OR ADJUSTMENTS WHICH MAY RESULT IN ILLEGAL OPERATION. (REFER TO FCC RULES AND REGULATIONS PART 95, SUBPARTS C & D.)

The frequency of the transmitter should be checked periodically with a secondary frequency standard to insure proper and legal operation.

Best results will be obtained when adjusting the final RF output circuit if the antenna normally used is connected and the chassis is as nearly in the cabinet as possible.

Connect either 50-ohm dummy load or the normally used antenna system.

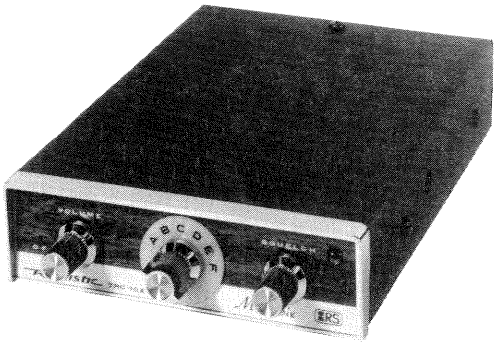

MODEL TRC-10A (Mini-Six) (21-126)

ALIGNMENT INSTRUCTIONS

Suggested Alignment Tools:	GE ELECTRONICS
T1, T9, T10, T11	#5009,8195
T2, T8	#9440
MF1, T3, T41, T5	#8728

RECEIVER

Connect an AC VTVM across the speaker voice coil,
Set squelch control fully CCW, adjust volume control for suitable reading.

SIGNAL GENERATOR	CHANNEL	ADJUST	REMARKS
Connect high side thru .01 mfd to base of Q2, low side to ground. Set to 455 KHz (Mod.).	Any	T5,T4, T3,MF1	Adjust for maximum.
Connect high side thru .01 mfd to antenna connector, low side to ground. Set to 27.085 MHz Mod 30% with a 1 KHz tone.	CH 11	T2,T1	Adjust for maximum.
Same as above .25 uV output	CH 11	R11	Adjust for 2 V output.

TRANSMITTER

INDICATOR	ADJUST	REMARKS
RF Wattmeter	T8	Connect to antenna connector, key transmitter. Turn core 2 turns CW from point where oscillation begins.
RF Wattmeter	T9,T10, T11	Connect to antenna connector key transmitter. Adjust for maximum output.
0-500 mA DC Millemmeter	T10	Remove "Current Check Point" jumper and insert milliameter (TP1). Adjust for maximum of 5 watts input.

HOWARD W. SAMS & CO., INC. Indianapolis, Indiana 46206

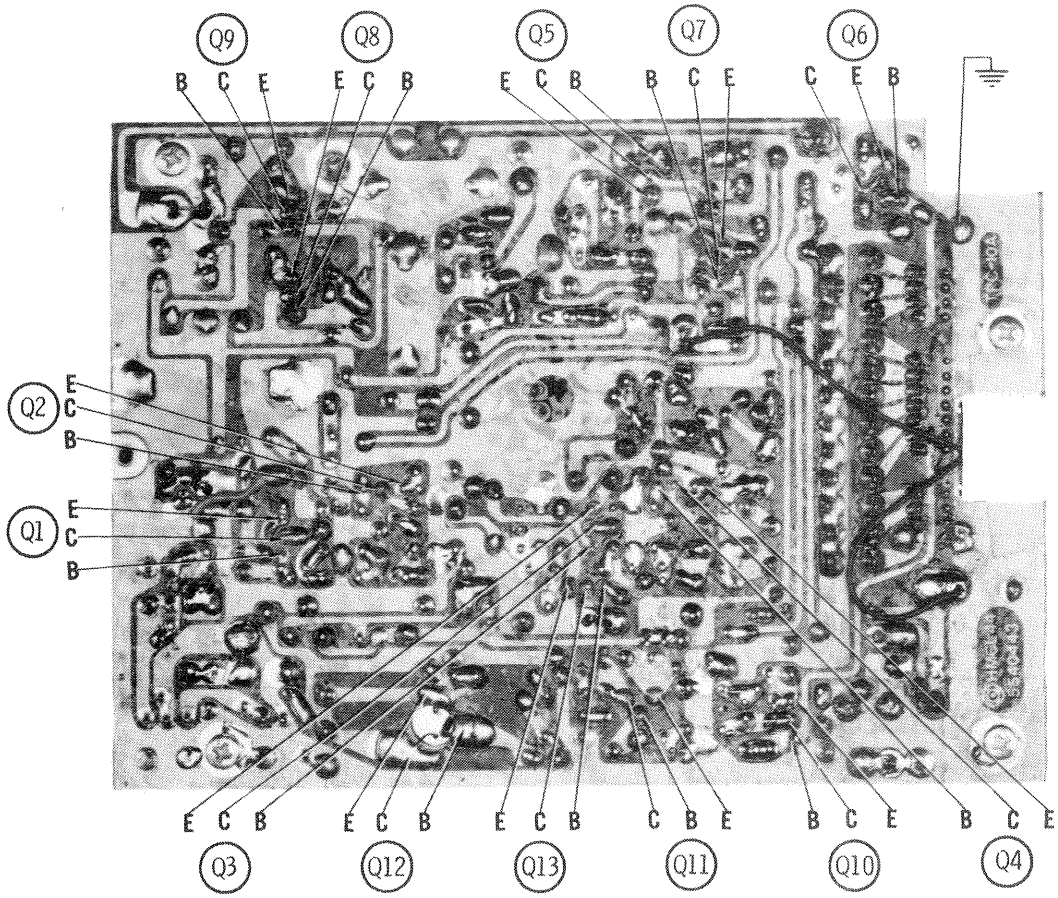
Q9
B C E
Q8
E C B
Q5
E C B
Q7
B C E
Q6
C E B
Q2
E
C
B
Q1
E
C
B
E C B
Q3
E C B
Q12
E C B
Q13
C B E
Q11
B C E
Q10
B C E
Q4

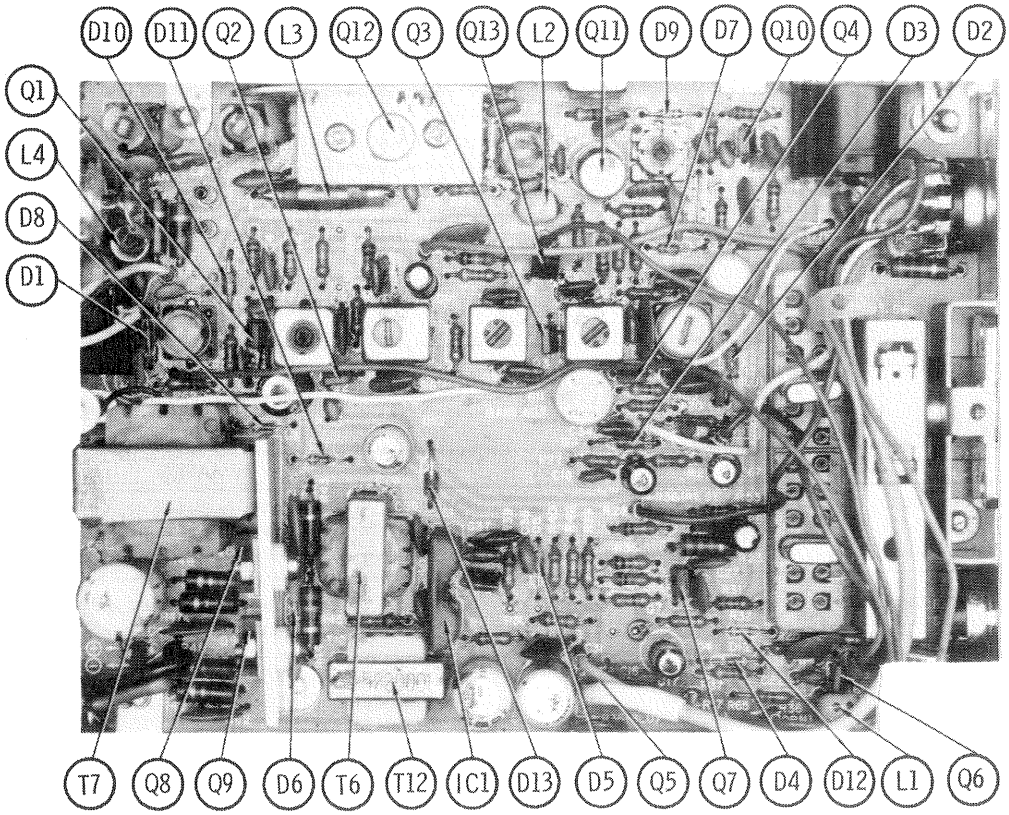
D10
D11
Q2
L3
Q12
Q3
Q13
L2
Q11
D9
D7
Q10
Q4
D3
D2
Q1
L4
D8
D1
T7
Q8
Q9
D6
T6
T12
IC1
D13
D5
Q5
Q7
D4
D12
L1
Q6

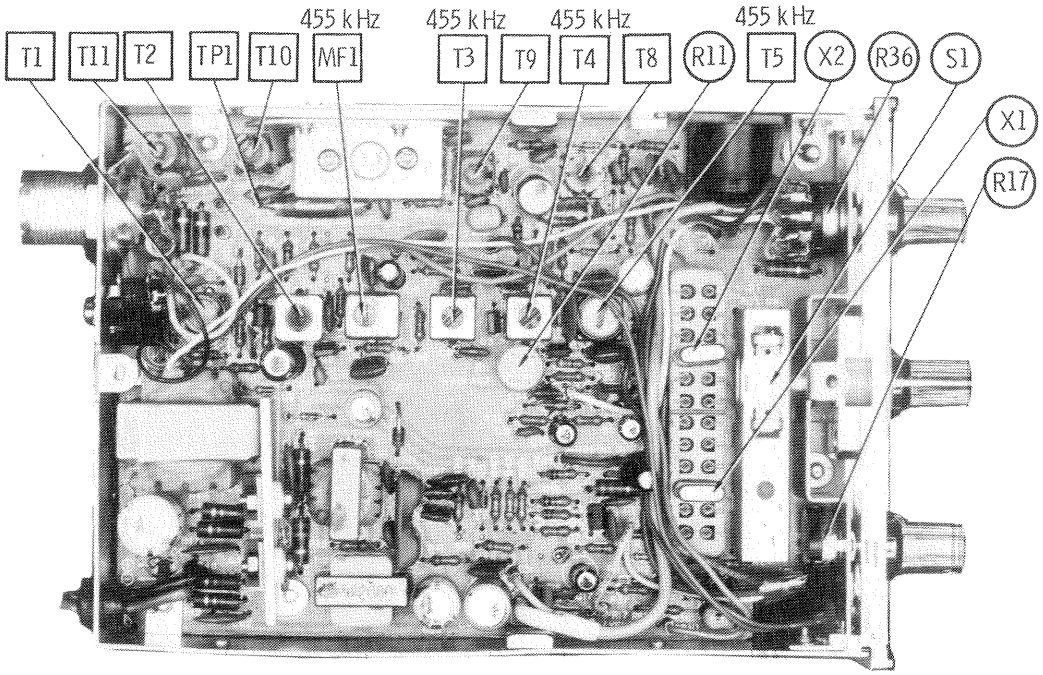
455 kHz
455 kHz
455 kHz
455 kHz
T1
T11
T2
TP1
T10
MF1
T3
T9
T4
T8
R11
T5
X2
R36
S1
X1
R17

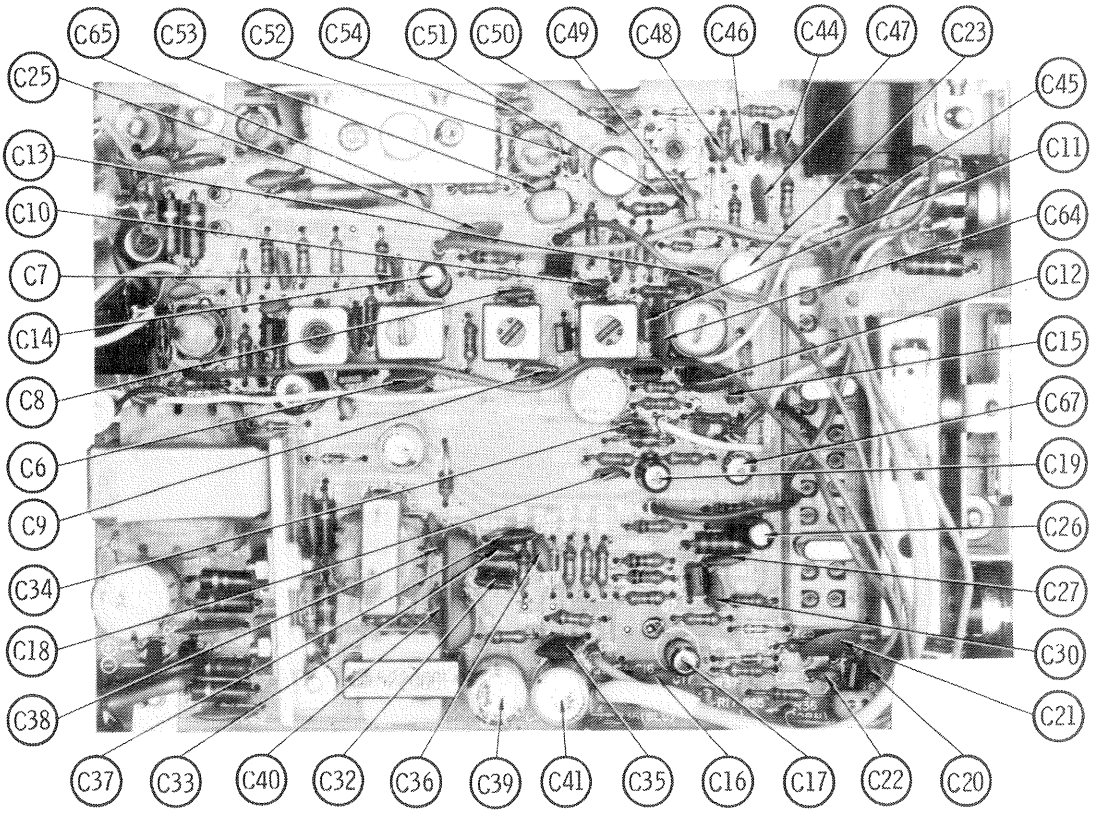
C65
C53
C52
C54
C51
C50
C49
C48
C46
C44
C47
C23
C25
C13
C10
C7
C14
C8
C6
C9
C34
C18
C38
C37
C33
C40
C32
C36
C39
C41
C35
C16
C17
C22
C20
C21
C30
C27
C26
C19
C67
C15
C12
C64
C11
C45

A Howard W. Sams CIRCUITRACE® Photo

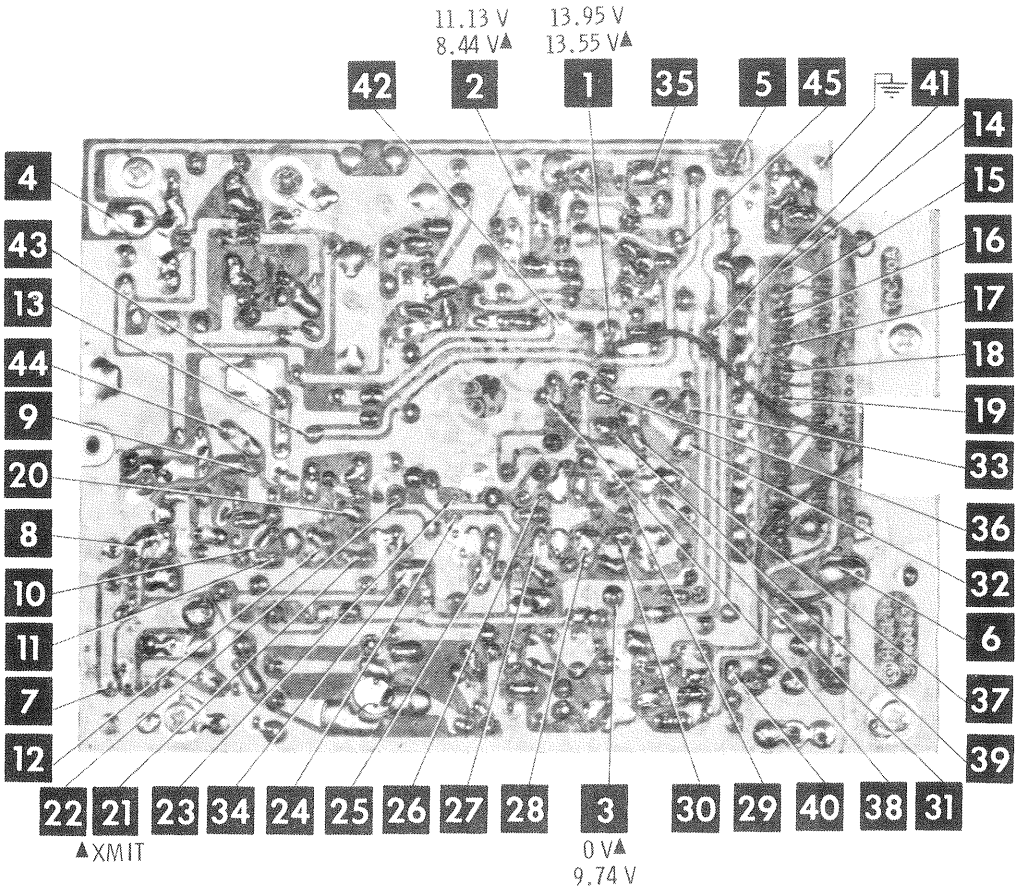

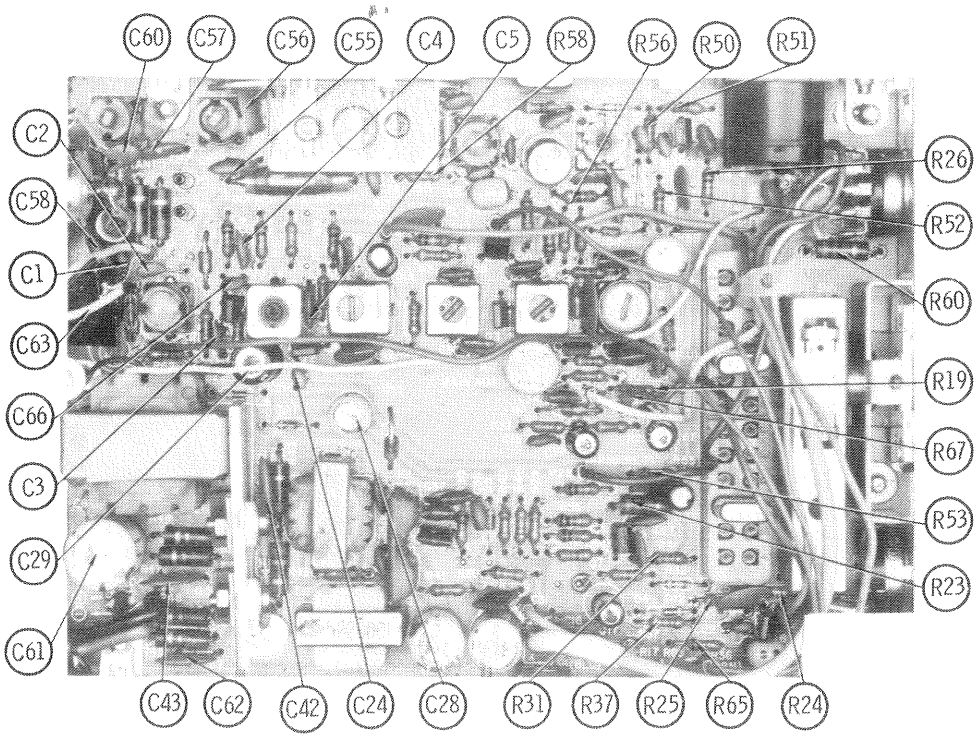

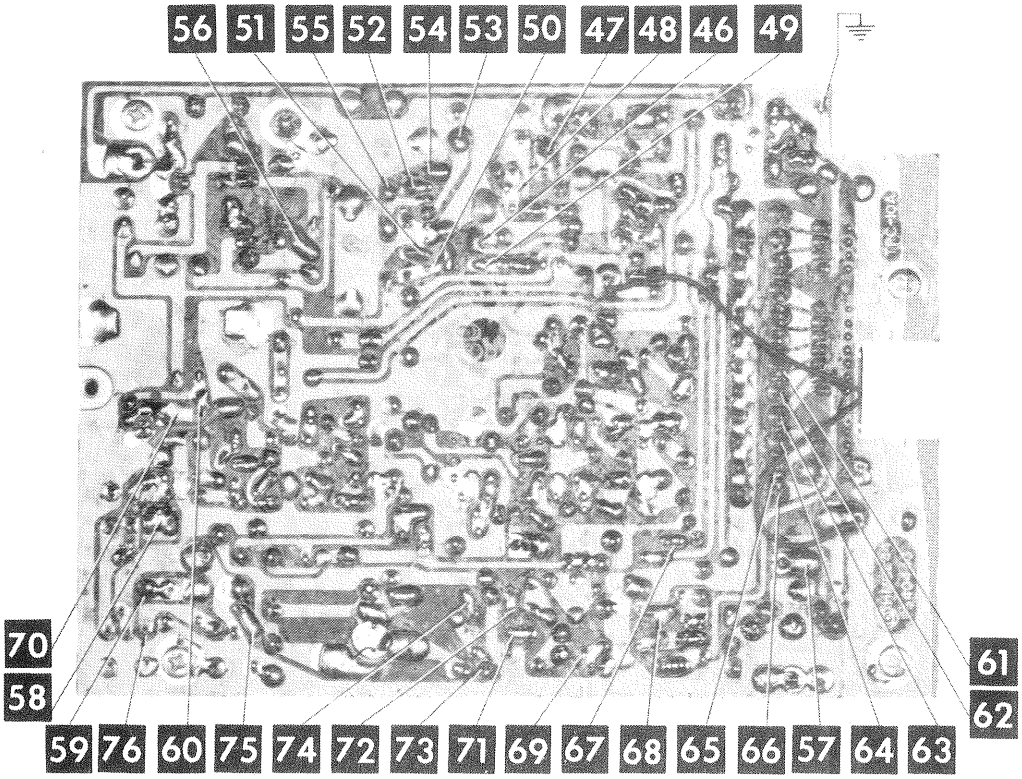
56
51
55
52
54
53
50
47
48
46
49
70
58
59
76
60
75
74
72
73
71
69
67
68
65
66
57
64
63
61
62

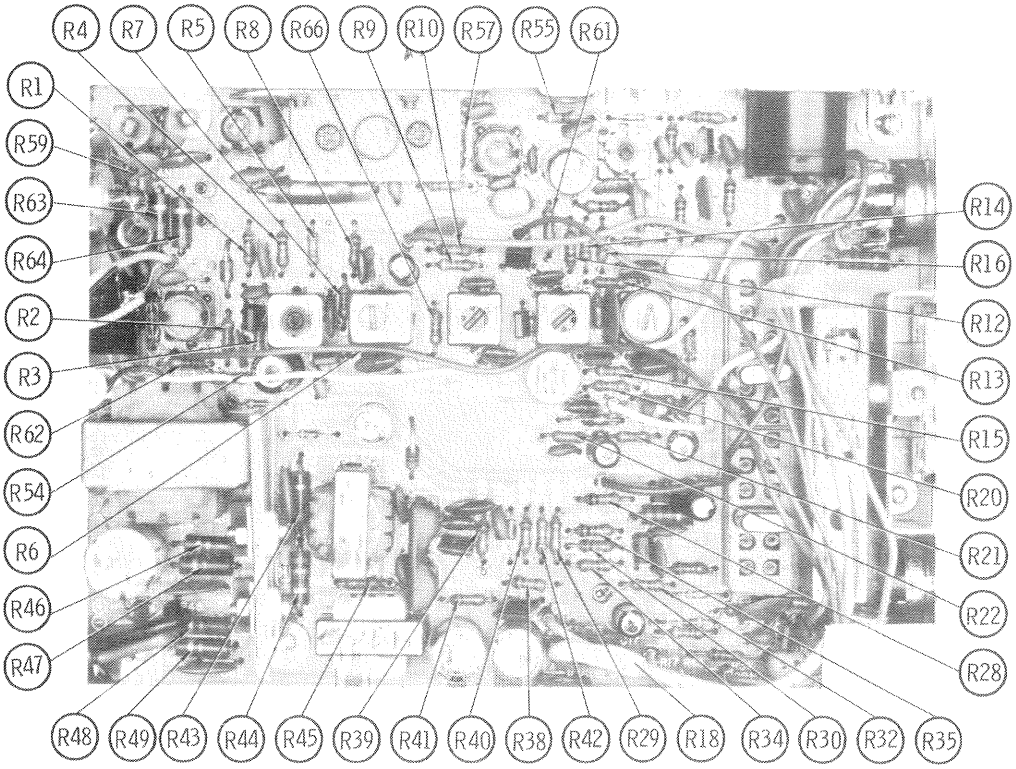
R4
R7
R5
R8
R66
R9
R10
R57
R55
R61
R1
R59
R63
R64
R2
R3
R62
R54
R6
R46
R47
R14
R16
R12
R13
R15
R20
R21
R22
R28
R48
R49
R43
R44
R45
R39
R41
R40
R38
R42
R29
R18
R34
R30
R32
R35

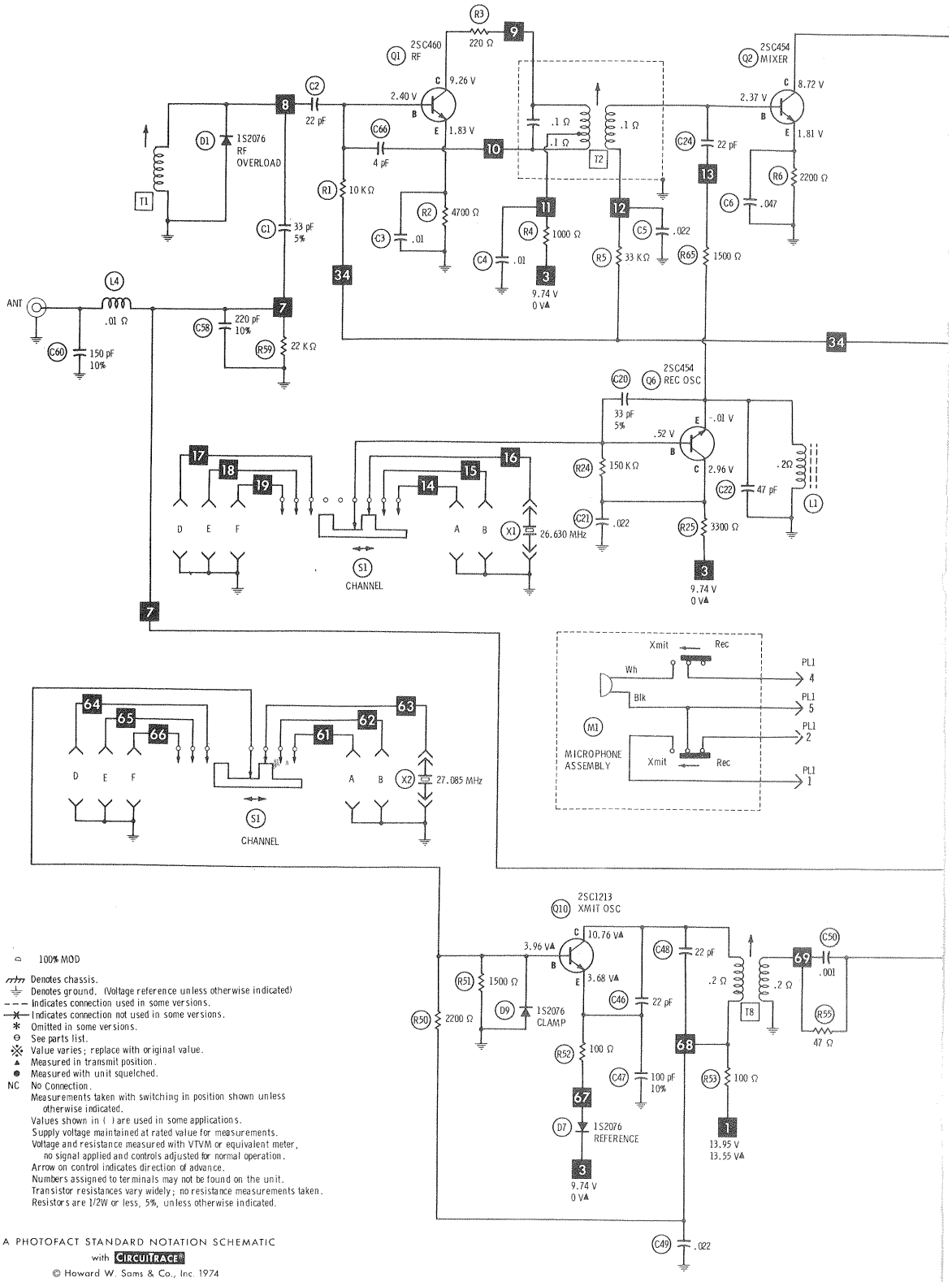

100% MOD

Denotes chassis.
Denotes ground. (Voltage reference unless otherwise indicated)
Indicates connection used in some versions.
Indicates connection not used in some versions.
* Omitted in some versions.
⊖ See parts list.
※ Value varies; replace with original value.
▲ Measured in transmit position.
● Measured with unit squelched.
NC No Connection.
Measurements taken with switching in position shown unless otherwise indicated.
Values shown in ( ) are used in some applications.
Supply voltage maintained at rated value for measurements.
Voltage and resistance measured with VTVM or equivalent meter, no signal applied and controls adjusted for normal operation.
Arrow on control indicates direction of advance.
Numbers assigned to terminals may not be found on the unit.
Transistor resistances vary widely; no resistance measurements taken.
Resistors are 1/2W or less, 5%, unless otherwise indicated.

A PHOTOFACT STANDARD NOTATION SCHEMATIC
with CIRCUITRACE™

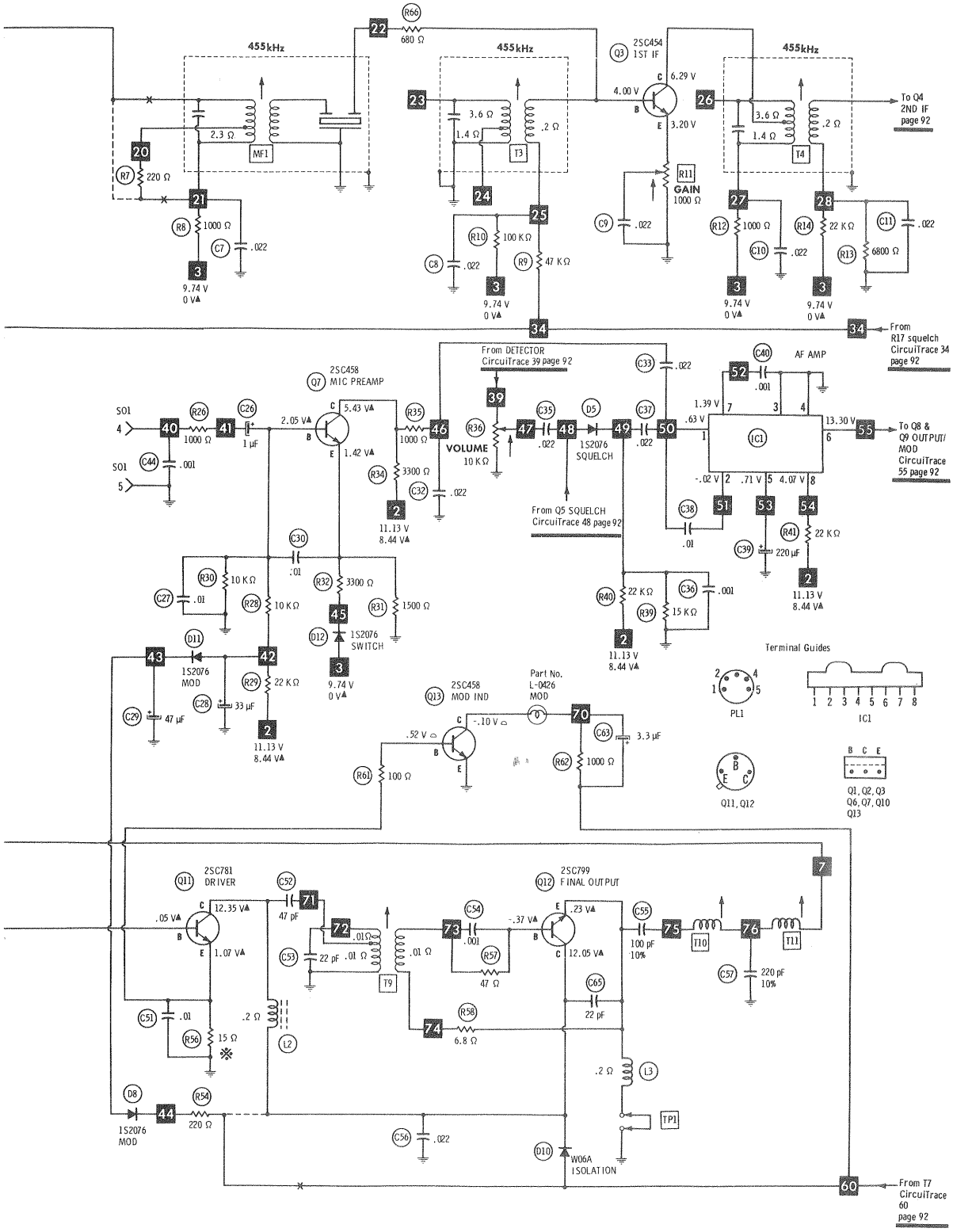

REALISTIC MODEL TRC-10A

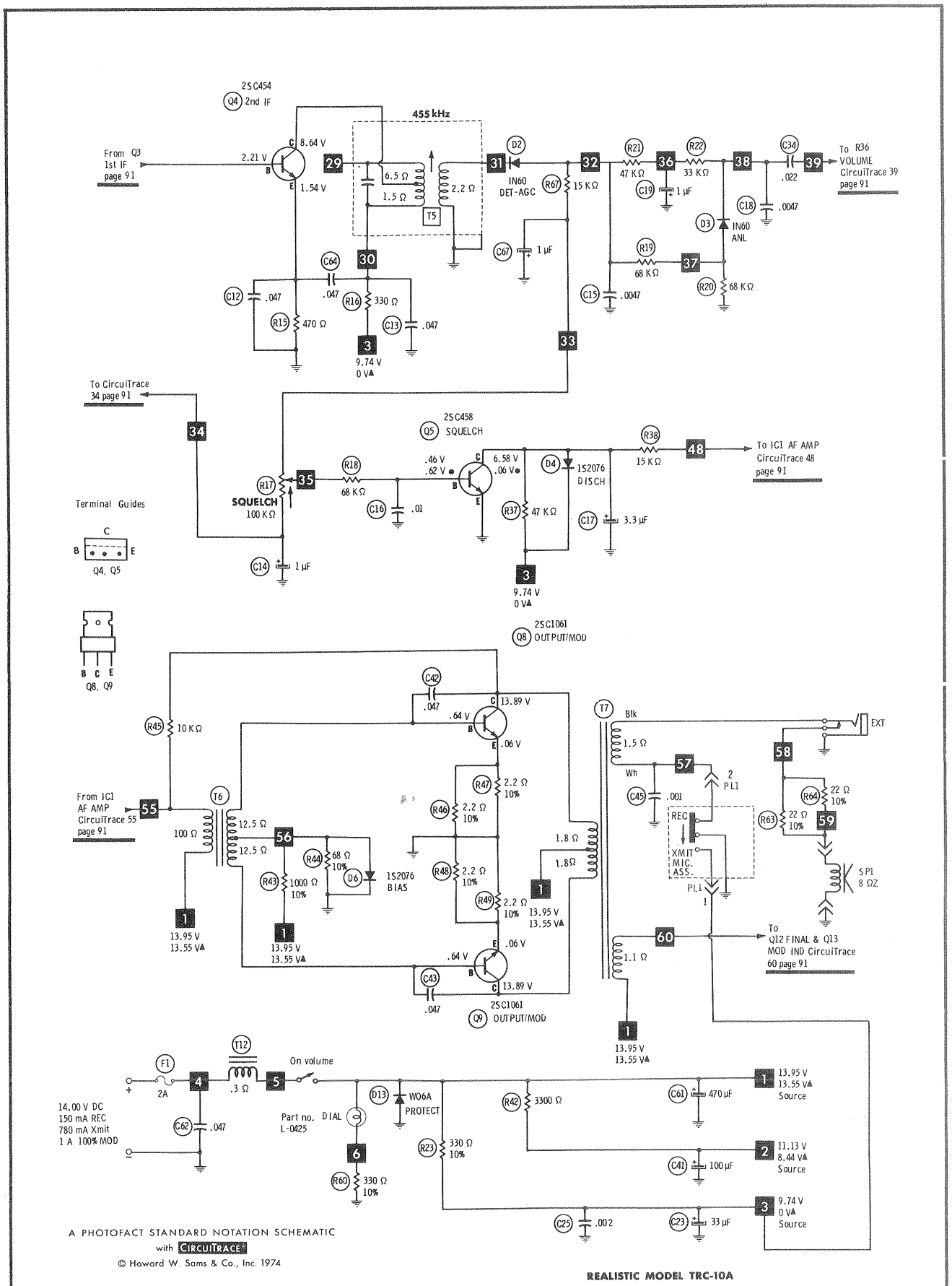

A PHOTOFACT STANDARD NOTATION SCHEMATIC
with CIRCUITRACE™

REALISTIC MODEL TRC-10A

SEE NOTES ON PAGE 90

PARTS LIST AND DESCRIPTION

(When ordering parts, state Model, Part Number, and Description.)

WIRING DATA

General-use Hook-up Wire ..... Use BELDEN No. 8530 (Solid) Available in 12 Colors
8524 (Stranded) Available in 12 Colors
Shielded Antenna Lead ..... Use BELDEN No. 8214 Lowest-loss (RG-8/U Type)
8237 Low-loss (RG-8/U)
8240 (Solid) Miniature (RG-58/U)
8259 (Stranded) Miniature (RG-58A/U)
Coiled Microphone Cable ..... Use BELDEN No. 8497 3-Conductor,1 Shielded,for Press-to-Talk (Neoprene)
8496 3-Conductor,1 Shielded,for Press-to-Talk (Vinyl)
Ignition Noise Suppression ..... Use BELDEN No. 7300-Series Spark-Plug Sets
Bonding Strap ..... Use BELDEN No. 8661 (3/8 In.)

SEMICONDUCTORS

ITEM No.	TYPE / MFGR. No./PART No.	REPLACEMENT DATA						
		GENERAL ELECTRIC PART No.	INTERNATIONAL RECTIFIER PART No.	MALLORY PART No.	MOTOROLA PART No.	RCA PART No.	SPRAGUE PART No.	SYLVANIA PART No.
D1	1S2076	GE-300	D200	PTC214	HEPR0602	SK3100	RT218	ECG 177
D2	1N60	1N60	1N60	PTC206	HEP135	SK3088		ECG 109
D3	1N60	1N60	1N60	PTC206	HEP135	SK3088		ECG 109
D4	1S2076	GE-300	D200	PTC214	HEPR0602	SK3100	RT218	ECG 177
D5	1S2076	GE-300	D200	PTC214	HEPR0602	SK3100	RT218	ECG 177
D6	1S2076	GE-300	D200	PTC214	HEPR0602	SK3100	RT218	ECG 177
D7	1S2076	GE-300	D200	PTC214	HEPR0602	SK3100	RT218	ECG 177
D8	1S2276	GE-300	D200	PTC214	HEPR0602	SK3100	RT218	ECG 177
D9	1S2076	GE-300	D200	PTC214	HEPR0602	SK3100	RT218	ECG 177
D10	W06A	GE-504A	8D4 or 5A4D	PTC201 or PTC202	HEPR0052	SK3030 or SK3031	RT213 or RT214	ECG 116 or ECG 117
D11	1S2076	GE-300	D200	PTC214	HEPR0602	SK3100	RT218	ECG 177
D12	1S2076	GE-300	D200	PTC214	HEPR0602	SK3100	RT218	ECG 177
D13	W06A	GE-504A	8D4 or 5A4D	PTC201 or PTC202	HEPR0052	SK3030 or SK3031	RT213 or RT214	ECG 116 or ECG 117
IC1	FA6007M							
Q1	2SC460C	GE-17	TR-24	PTC131	HEP729	SK3018	RT107	ECG 107
Q2	2SC454C	GE-20	TR-24	PTC132	HEP50	SK3018	RT108	ECG 107
Q3	2SC454C	GE-20	TR-24	PTC132	HEP50	SK3018	RT108	ECG 107
Q4	2SC454C	GE-20	TR-24	PTC132	HEP50	SK3018	RT108	ECG 107
Q5	2SC458D	GE-62	IRTR-51	PTC123	HEP737	SK3122	RT105	ECG 199
Q6	2SC454C	GE-20	TR-24	PTC132	HEP50	SK3018	RT108	ECG 107
Q7	2SC458D	GE-62	IRTR-51	PTC123	HEP737	SK3122	RT105	ECG 199
Q8	2SC1061T(B)	GE-28	IRTR-92	PTC110	HEPS5003	SK3054	RT154	ECG 186
Q9	2SC1061T(B)	GE-28	IRTR-92	PTC110	HEPS5003	SK3054	RT154	ECG 186
Q10	2SC1213C	GE-63	TR-25	PTC143	HEP243	SK3024	RT114	ECG 192
Q11	2SC781		IRTR-87		HEPS3001	SK3048		ECG 195
Q12	2SC799		IRTR-65		HEPS3002	SK3049		ECG 195
Q13	2SC458	GE-62	IRTR-51	PTC123	HEP737	SK3122	RT105	ECG 199

ELECTROLYTIC CAPACITORS

ITEM No.	RATING	REPLACEMENT DATA					
		MFGR. PART No.	ARCO PART No.	CENTRALAB PART No.	CORNELL-DUBILIER PART No.	MALLORY PART No.	SPRAGUE PART No.
C14	1 25V		RME-A-G-001	EP30-2	PC1-50	MTV1CB50	EV-1315
C17	3.3 25V		RME-A-H-003	EP30-5	WBR5-50	VTT3R3A50	EV-1618
C19	1 25V		RME-A-G-001	EP30-2	PC1-50	MTV1CB50	EV-1315
C23	33 25V		ME-4-G-035	EP30-25	PC30-25	MTV30CB25	EV-1325
C26	1 25V		RME-A-G-001	EP30-2	PC1-50	MTV1CB50	EV-1315
C28	33 25V		ME-4-G-035	EP30-25	PC30-25	MTV30CB25	EV-1325
C29	47 16V		RME-E-E-050	EP15-50	PC50-16	MTV50CB15	EV-1226
C39	220 10V		RME-G-D-250	EA15-250	PC250-10	MTV250DB10	EV-1145
C41	100 16V		RME-E-E-100	EP15-100	PC100-16	MTV100CD15	EV-1230
C61	470 16V		RME-L-E-500	EA15-500	PC500-16	MTV500DN15	EV-1250
C63	3.3 25V		RME-A-H-003	EP30-5	WBR5-50	VTT3R3A50	EV-1618
C67	1 25V		RME-A-G-001	EP30-2	PC1-50	MTV1CB50	EV-1315

CAPACITORS

ITEM No.	RATING	MFGR. PART No.	REPLACEMENT DATA				
			ARCO/ELMENCO PART No.	CENTRALAB PART No.	CORNELL-DUBILIER PART No.	MALLORY PART No.	SPRAGUE PART No.
C1	33 10%		CCT0-330	DTZ-33	NP033	CN0433	10TCC-Q33
C2	22 10%			DTZ-25		CN0425	10TCC-Q25
C3	.01		CCD-103	CK-103	MGP01	TA110	TG-S10
C4	.01		CCD-103	CK-103	MGP01	TA110	TG-S10
C5	.022		CCD-203	CK-203	MGP02	TA120	TG-S20
C6	.047		CCD-503	CK-503	MGP05	TA150	TG-S50
C7	.022		CCD-203	CK-203	MGP02	TA120	TG-S20
C8	.022		CCD-203	CK-203	MGP02	TA120	TG-S20
C9	.022		CCD-203	CK-203	MGP02	TA120	TG-S20
C10	.022		CCD-203	CK-203	MGP02	TA120	TG-S20
C11	.022		CCD-203	CK-203	MGP02	TA120	TG-S20
C12	.047		CCD-503	CK-503	MGP05	TA150	TG-S50
C13	.047		CCD-503	CK-503	MGP05	TA150	TG-S50
C15	.0047		CCD-472	DD-472G	GP4700	JF247	10TS-D47
C16	.01		CCD-103	CK-103	MGP01	TA110	TG-S10
C18	.0047		CCD-472	DD-472G	GP4700	JF247	10TS-D47
C20	33 10%		CCT0-330	DTZ-33	NP033	CN0433	10TCC-Q33
C21	.022		CCD-203	CK-203	MGP02	TA120	TG-S20
C22	47 10%		CCT0-470	DTZ-47	NP047	CN0447	10TCC-Q47
C24	22 10%			DTZ-25		CN0425	10TCC-Q25
C25	.022 10%		CCD-203	CK-203	MGP02	TA120	TG-S20
C27	.01		CCD-103	CK-103	MGP01	TA110	TG-S10
C30	.01		CCD-103	CK-103	MGP01	TA110	TG-S10
C32	.022		CCD-203	CK-203	MGP02	TA120	TG-S20
C33	.022		CCD-203	CK-203	MGP02	TA120	TG-S20
C34	.022		CCD-203	CK-203	MGP02	TA120	TG-S20
C35	.022		CCD-203	CK-203	MGP02	TA120	TG-S20
C36	.001		CCD-102	DD-102	GP1000	SM210	2SS-D10
C37	.022		CCD-203	CK-203	MGP02	TA120	TG-S20
C38	.01		CCD-103	CK-103	MGP01	TA110	TG-S10
C40	.001		CCD-102	DD-102	GP1000	SM210	2SS-D10
C42	.047		CCD-503	CK-503	MGP05	TA150	TG-S50
C43	.047		CCD-503	CK-503	MGP05	TA150	TG-S50
C44	.001		CCD-102	DD-102	GP1000	SM210	2SS-D10
C45	.001		CCD-102	DD-102	GP1000	SM210	2SS-D10

PARTS LIST AND DESCRIPTION (CONTINUED)

(When ordering parts, state Model, Part Number, and Description.)

CAPACITORS (cont)

ITEM No.	RATING		MFGR. PART No.	REPLACEMENT DATA				
				ARCO/ELMENCO PART No.	CENTRALAB PART No.	CORNELL-DUBILIER PART No.	MALLORY PART No.	SPRAGUE PART No.
C46	22	10%			DTZ-25		CN0425	10TCC-Q25
C47	100	10%		CCT0-101	DTZ-100	NP0100	CN0310	10TCC-T10
C48	22	10%			DTZ-25		CN0425	10TCC-Q25
C49	.022			CCD-203	CK-203	MGP02	TA120	TG-S20
C50	.001			CCD-102	DD-102	GP1000	SM210	2SS-D10
C51	.01			CCD-103	CK-103	MGP01	TA110	TG-S10
C52	47	10%		CCT0-470	DTZ-47	NP047	CN0447	10TCC-Q47
C53	22	10%			DTZ-25		CN0425	10TCC-Q25
C54	.001			CCD-102	DD-102	GP1000	SM210	2SS-D10
C55	100	10%		CCT0-101	DTZ-100	NP0100	CN0310	10TCC-T10
C56	.022			CCD-203	CK-203	MGP02	TA120	TG-S20
C57	220	10%		CCD-221	DD-221	GP220	GP322	10TS-T22
C58	220	10%		CCD-221	DD-221	GP220	GP322	10TS-T22
C60	150	10%		CCD-151	DD-151	GP150	GP315	10TS-T15
C62	.047			CCD-503	CK-503	MGP05	TA150	TG-S50
C64	.047			CCD-503	CK-503	MGP05	TA150	TG-S50
C65	22	10%			DTZ-25		CN0425	10TCC-Q25
C66	4	±.5				NP03P9		10TCC-V39

CONTROLS (All wattages 1/2 watt, or less, unless listed)

ITEM No.	FUNCTION	RESIST-ANCE	REPLACEMENT DATA				
			MFGR. PART No.	CENTRALAB PART No.	CLAROSTAT PART No.	CTS—IRC PART No.	MALLORY PART No.
R11	Gain	1000		TSV-1K (2) or T-1000 (2)	C-102 (2)	X201R102B (2)	MTC13L1 (2)
R17	Squelch	100K	P-1323				
R36	Volume/Switch	10K	P-1322				

(2) Cut off one of the end terminals and bend to fit PC board.

RESISTORS (Power and Special)

ITEM No.	RATING	REPLACEMENT DATA	
		WORKMAN PART No.	MFGR. PART No.
R46	2.2 1/2 W (Carbon)		
R47	2.2 1/2 W (Carbon)		

ITEM No.	RATING	REPLACEMENT DATA	
		WORKMAN PART No.	MFGR. PART No.
R48	2.2 1/2 W (Carbon)		
R49	2.2 1/2 W (Carbon)		

COILS (RF-IF)

ITEM No.	USE	REPLACEMENT DATA			
		PART No.	MEISSNER PART No.	MILLER PART No.	REMARKS
L1	RF Choke (1 uH)	CA-2883	19-1000	74F106AP	
L2	RF Choke (4.7 uH)	CA-2884		74F476AP	
L3	RF Choke (2.2 uH)	CB-2027		74F226AP	
L4	RF Choke (.33 uH)	CA-6647	19-2004	4586	
MF1	Input IF	CB-2026		8814	
T1	Ant, Matching	CA-2881			
T2	RF Output	CA-4087			
T3	Interstage IF	CA-6626	19-9027	2067	
T4	Interstage IF	CA-6626	19-9027	2067	
T5	Output IF	CA-6074			
T8	Oscillator	CA-4086			
T9	Driver Output	CA-4085			
T10	Final Output	CA-4084			
T11	Pi Filter	CA-4088			

FILTER CHOKE

ITEM No.	RATINGS			MFGR. PART No.
	CURRENT (Measured)	DC RES.	INDUCTANCE (0 CURRENT 1000~)	
T12	780 mH	.3	3.5 mH	CA-2875(5220001)

TRANSFORMER (Driver)

ITEM No.	TURNS RATIO			MFGR. PART No.
	PRI.	SEC. 1	SEC. 2	
T6	8	1	1	TB-0242 (5240101)

TRANSFORMER (Audio Output)

ITEM No.	IMPEDANCE		MFGR. PART No.	
	PRI.	SEC.		
T7	11.5	8	TB-0245 (5250611)	

SPEAKER

ITEM No.	TYPE	MFGR. PART No.
SP1	3" PM 8 ohms	S-4447

FUSE DEVICES

ITEM No.	DESCRIPTION	REPLACEMENT DATA						
		PART No.		BUSS PART No.		LITTELFUSE PART No.		WORKMAN PART No.
		DEVICE	HOLDER	DEVICE	HOLDER	DEVICE	HOLDER	DEVICE
F1	2A Quick Acting	HF-0063		AGC2	HDJ	312002	150145	FG2-2

MISCELLANEOUS

ITEM No.	PART NAME	PART No.	NOTES
S1	Switch	S-2173	Channel Selector
X1	Xtal		26.630 MHz CH 11 Rec.
X2	Xtal		27.085 MHz CH 11 Xmit.

CABINETS & CABINET PARTS (When ordering specify model, chassis & color)

ITEM	PART No.
Escutcheon Assembly	Z-1374
Indicator	D-0241
Cover, Upper	Z-1375

ITEM	PART No.
Knob, Control	K-1360
Knob, Selector	K-1361

For Supplier Address See PHOTOFACT Index

NOTE

ONLY THOSE PERSONS PROPERLY LICENSED ARE PERMITTED TO MAKE REPAIRS OR ADJUSTMENTS WHICH MAY RESULT IN ILLEGAL OPERATION. (REFER TO FCC RULES AND REGULATIONS PART 95, SUBPARTS C & D.)

The frequency of the transmitter should be checked periodically with a secondary frequency standard to insure proper and legal operation.

Best results will be obtained when adjusting the final RF output circuit if the antenna normally used is connected and the chassis is as nearly in the cabinet as possible.

Connect either 50-ohm dummy load or the normally used antenna system.

MODEL SS-747B

ALIGNMENT INSTRUCTIONS

Suggested Alignment Tools:	GC ELECTRONICS:
L202,L205,L206,L207,L208,T201	8290,5000
T101,T310,T311	9089,9087
T102,T103,T104,T302,T303,T304,T305,T306,T307,T308,T309,T401,T402,T403,T404,T405	9440
VC101,VC102,VC103,VC201,VC301,VC401 thru VC414	9087,5000

SYNTHESIZER ALIGNMENT

INDICATOR	ADJUST	REMARKS
Frequency Counter	VC401	Set Mode Switch to AM. Set Clarifier to zero, push in to RX Mode. Connect counter to TP35. Set to CH1. Adjust for 11.705 MHz.
Frequency Counter	VC402	Set to CH5. Adjust for 11.755 MHz.
Frequency Counter	VC403	Set to CH9. Adjust for 11.805 MHz.
Frequency Counter	VC404	Set to CH13. Adjust for 11.855 MHz.
Frequency Counter	VC405	Set to CH17. Adjust for 11.905 MHz.
Frequency Counter	VC406	Set to CH21. Adjust for 11.955 MHz.
Frequency Counter	VC407	Connect Counter to TP34. Set to CH1. Adjust for 7.4615 MHz.
Frequency Counter	VC408	Set to CH2. Adjust for 7.4715 MHz.
Frequency Counter	VC409	Set to CH3. Adjust for 7.4815 MHz.
Frequency Counter	VC410	Set to CH4. Adjust for 7.5015 MHz.
Frequency Counter	VC411	Set Mode Switch to LSB. Set to CH1. Adjust for 7.4585 MHz.
Frequency Counter	VC412	Set to CH2. Adjust for 7.4685 MHz.
Frequency Counter	VC413	Set to CH3. Adjust for 7.4785 MHz.
Frequency Counter	VC414	Set to CH4. Adjust for 7.4985 MHz.

HOWARD W. SAMS & CO., INC. Indianapolis, Indiana 46206

SYNTHESIZER ALIGNMENT(CONTINUED)

INDICATOR	ADJUST	REMARKS
Frequency Counter	VC103	Connect Counter to TP7. Set to any channel. Adjust for 7.8015 MHz.
Frequency Counter	VC102	Set Mode Switch to USB. Adjust for 7.7985 MHz.
Frequency Counter	VC301	Connect Counter to TP20. Set Mode Switch to AM. Adjust for 7.3435 MHz.
Frequency Counter	VR401	Connect Counter to TP35. Pull Clarifier Knob to TX-RX Position. Set to CH1. Key transmitter. Adjust for 11.705 MHz.

RECEIVER ALIGNMENT

Connect AC VTVM across speaker voice coil. Set Squelch control fully counterclockwise. Set Clarifier to "O" pushed in to "RX" position. Set "NB", "ANL", "PA" Switch to "ANL". Adjust AF gain for suitable reading.

SIGNAL GENERATOR	CHANNEL	ADJUST	REMARKS
AM Connect high side thru .01 mfd to base of Q308 (2nd Mixer) low side to ground. Set to 455 kHz (mod.)	Any	T311, T310	Set mode switch to AM. Adjust for maximum.
AM Connect high side thru .01 mfd to antenna connector, low side to ground. Set to 27.085 MHz (mod.)	11	T308,T307 T306,T305 T304,T303 T405,T404 T403,T402 T401,T309	Adjust for maximum.
AM SSB Connect high side to TP12, low side to ground. Set to 7.8 MHz (mod.)	Any	T102,T302 T101	Adjust for maximum.

TRANSMITTER ALIGNMENT

INDICATOR	ADJUST	REMARKS
AM RF Wattmeter	T103,T104 T201,L202 L205,L206 L207,L208	Connect wattmeter to antenna connector. Mode Switch to AM. Key transmitter. Adjust for maximum.
0-500 mA DC milliameter	L205	Insert meter in meter jumper circuit in collector of Q203 Key Transmitter and readjust for 5 Watts Input.
TV Set (Ch2)	VC201	Key Transmitter and adjust for MINIMUM interference.
SSB RF Wattmeter and monitor scope.	VR101 VC101	Connect wattmeter and monitor scope to antenna connector. Set Mode Switch to LSB or USB. Short microphone Input to ground. Key Transmitter and adjust for MINIMUM carrier (No Audio).
0-50 mA DC milliameter	VR201	Insert meter in meter jumper circuit of collector of Q203 Key Transmitter and adjust for MINIMUM current (No Audio).

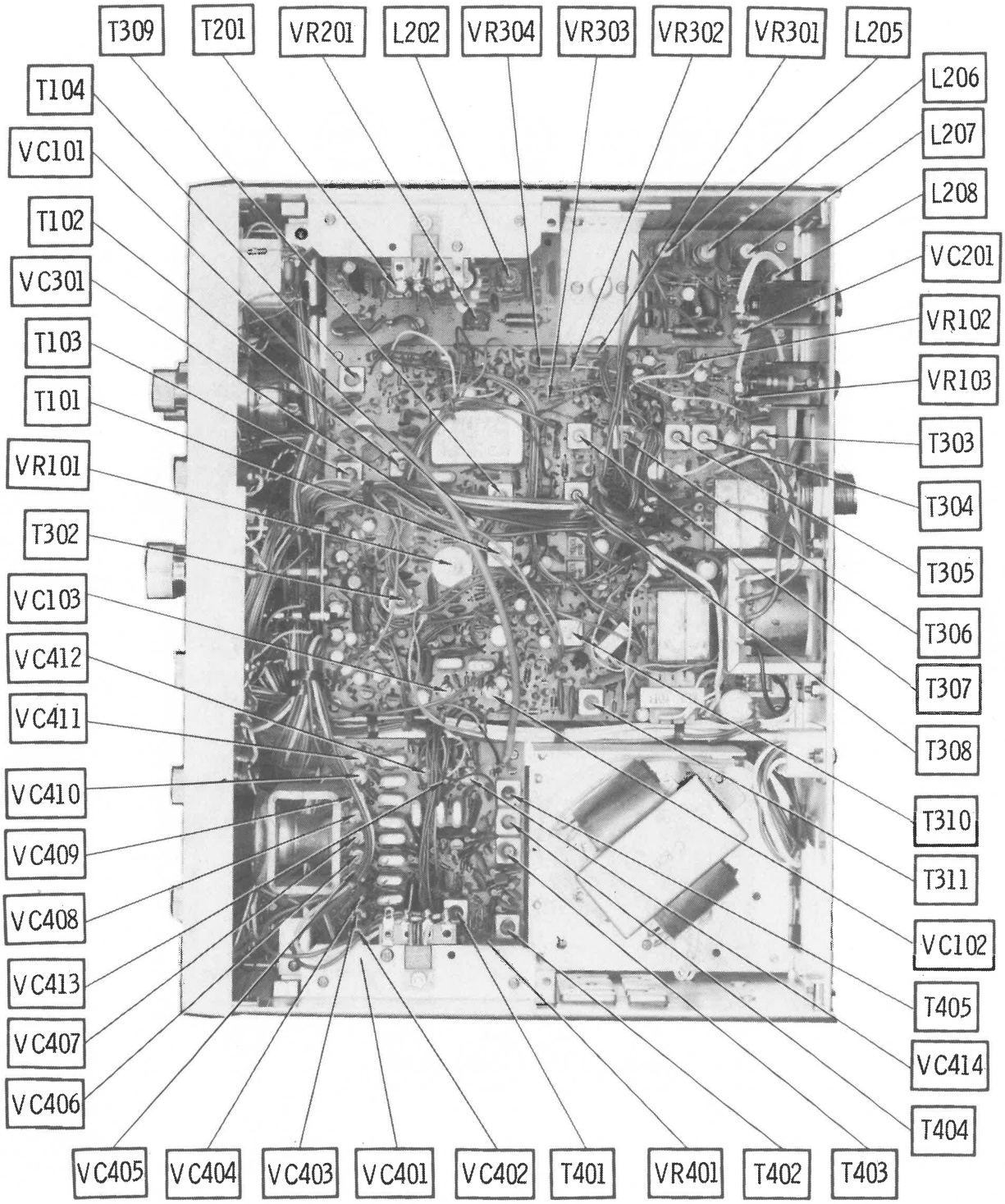
T309
T201
VR201
L202
VR304
VR303
VR302
VR301
L205
T104
VC101
T102
VC301
T103
T101
VR101
T302
VC103
VC412
VC411
VC410
VC409
VC408
VC413
VC407
VC406
VC405
VC404
VC403
VC401
VC402
T401
VR401
T402
T403
T404
VC414
T405
VC102
T311
T310
T308
T307
T306
T305
T304
T303
VR103
VR102
VC201
L208
L207
L206

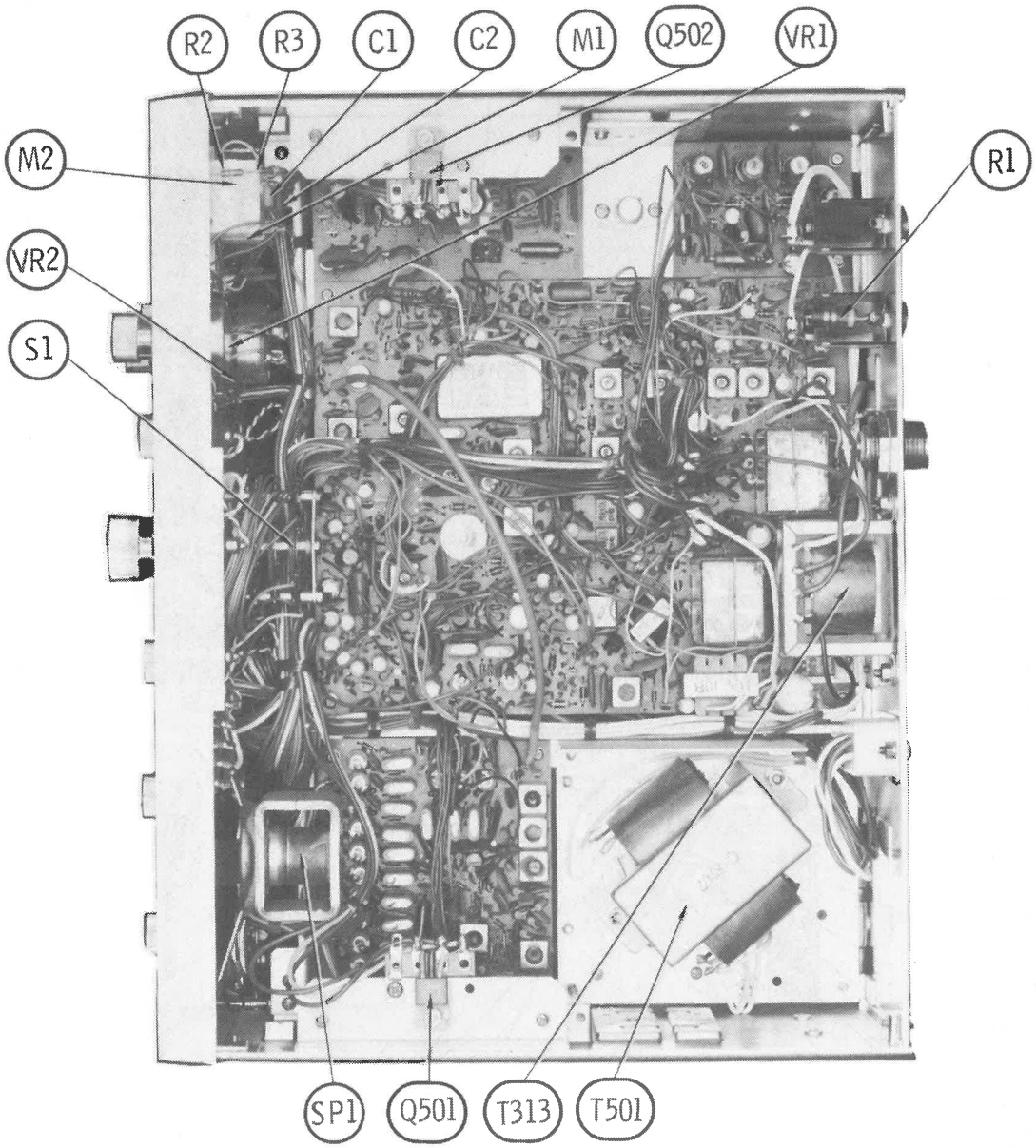
R2
R3
C1
C2
M1
Q502
VR1
M2
R1
VR2
S1
SP1
Q501
T313
T501

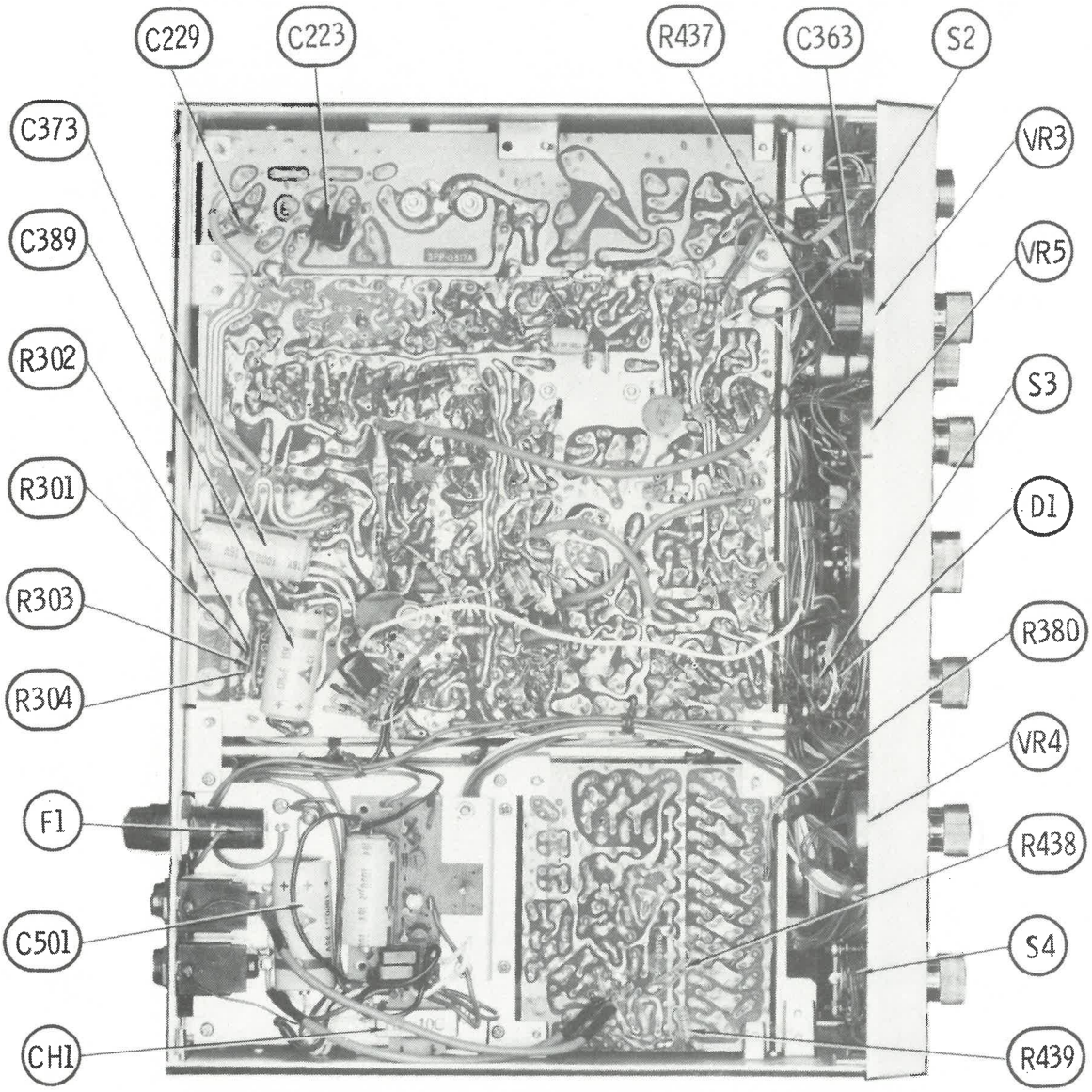
C229
C223
R437
C363
S2
C373
VR3
C389
VR5
R302
S3
R301
D1
R303
R380
R304
VR4
F1
R438
C501
S4
CH1
R439

A Howard W. Sams CIRCUITRACE® Photo

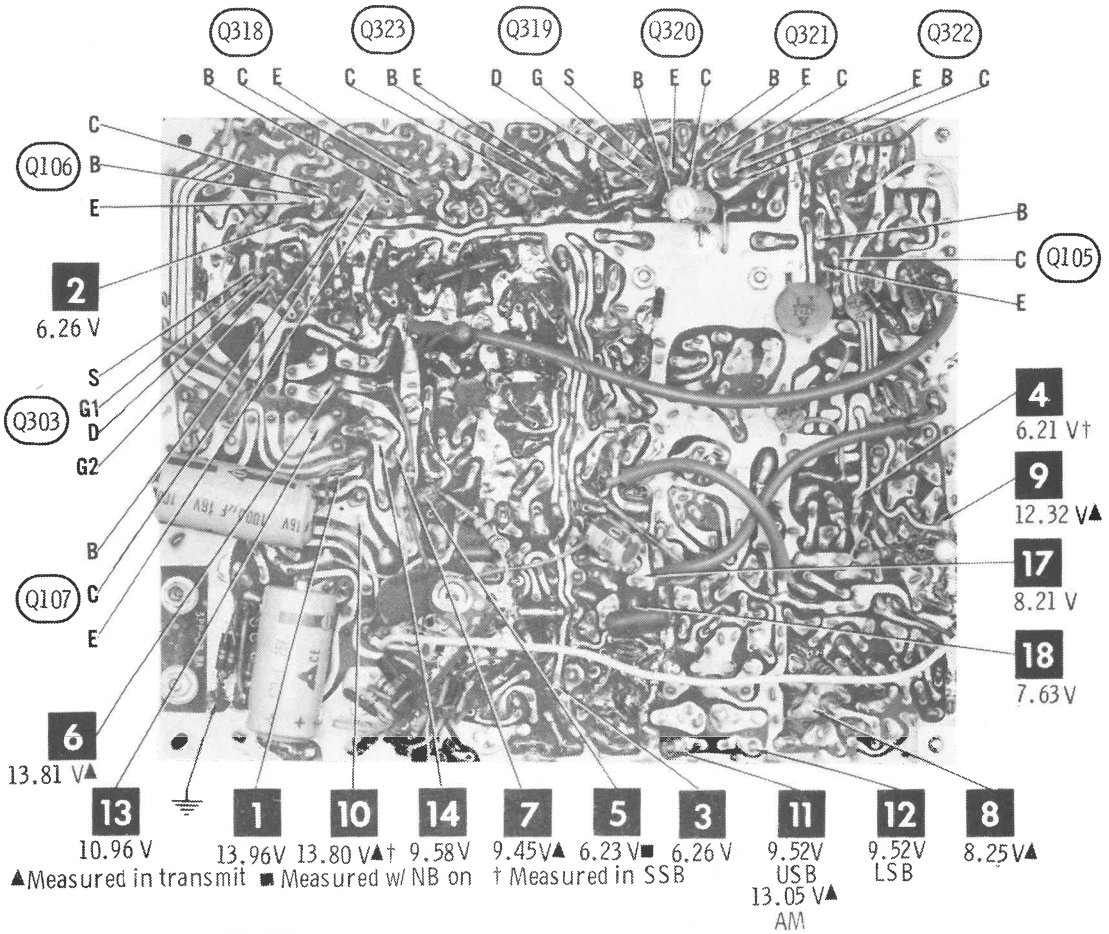

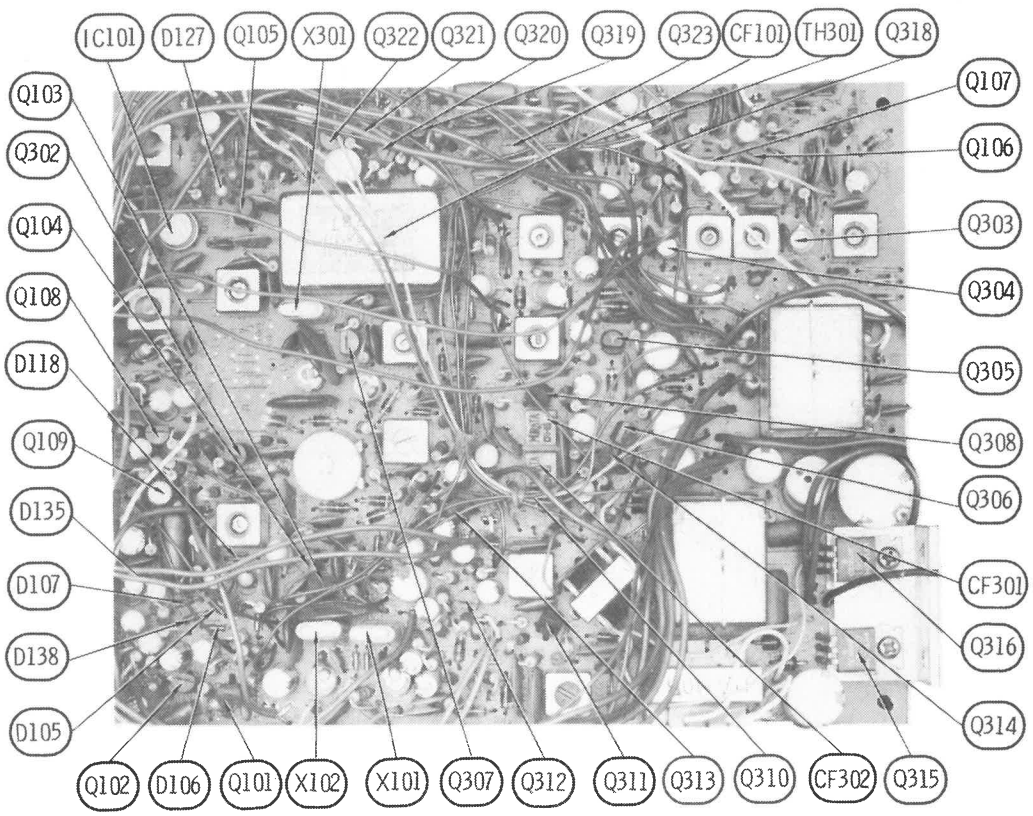

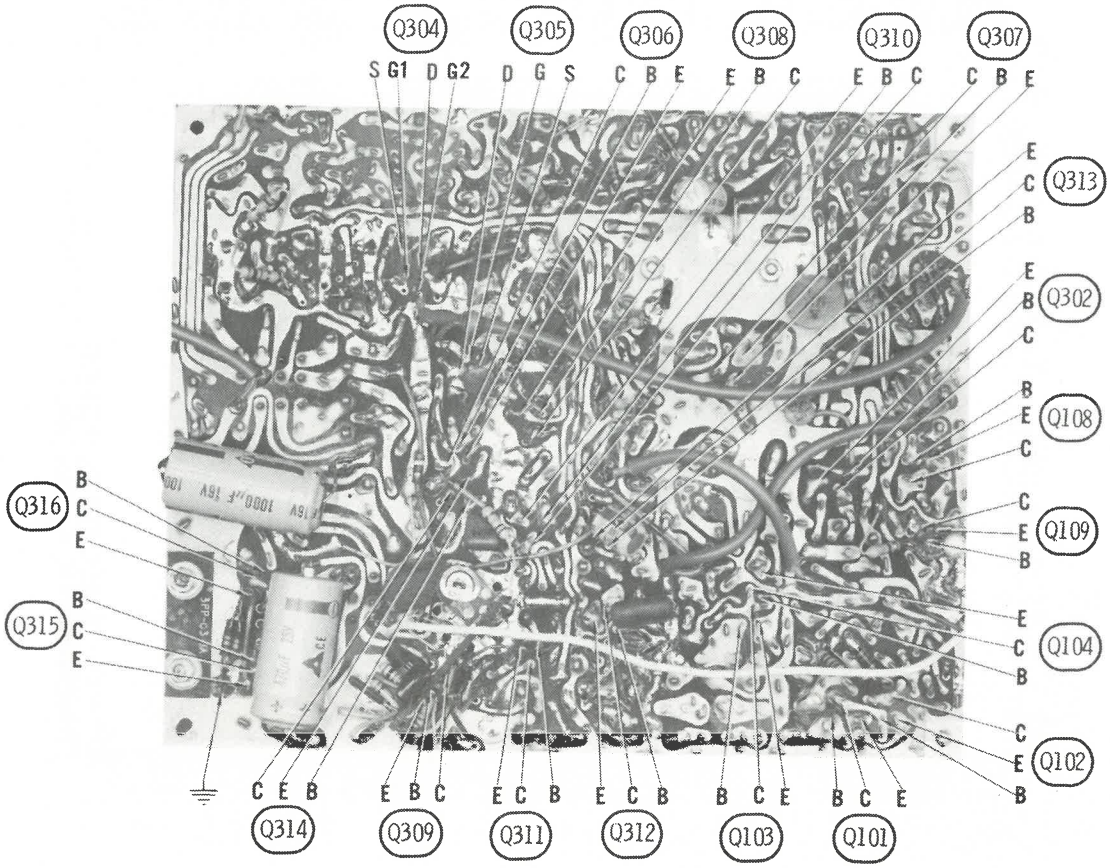
Q304
S G1 D G2
Q305
D G S
Q306
C B E
Q308
E B C
Q310
E B C
Q307
C B E
Q313
E C B
Q302
E B C
Q108
B E C
Q109
C E B
Q104
E C B
Q102
C E B
Q316
B C E
Q315
B C E
Q314
C E B
Q309
E B C
Q311
E C B
Q312
E C B
Q103
B C E
Q101
B C E

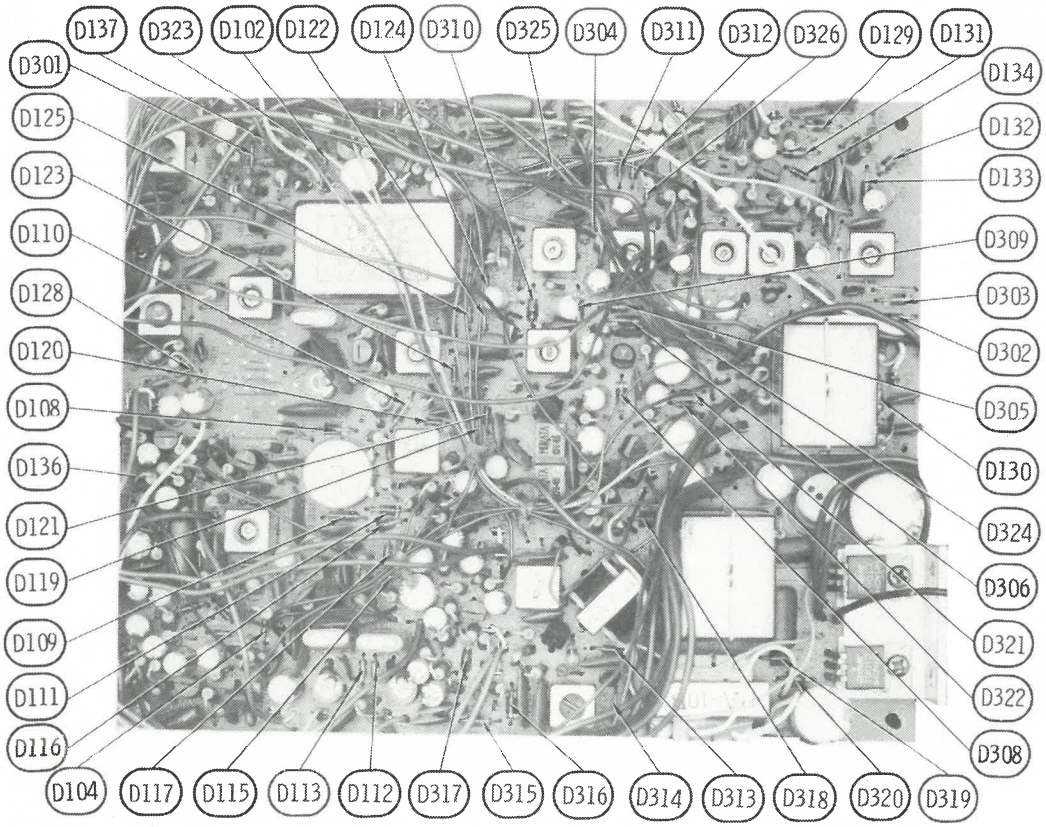
D137
D323
D102
D122
D124
D310
D325
D304
D311
D312
D326
D129
D131
D301
D125
D123
D110
D128
D120
D108
D136
D121
D119
D109
D111
D116
D104
D117
D115
D113
D112
D317
D315
D316
D314
D313
D318
D320
D319
D308
D322
D321
D306
D324
D130
D305
D302
D303
D309
D133
D132
D134

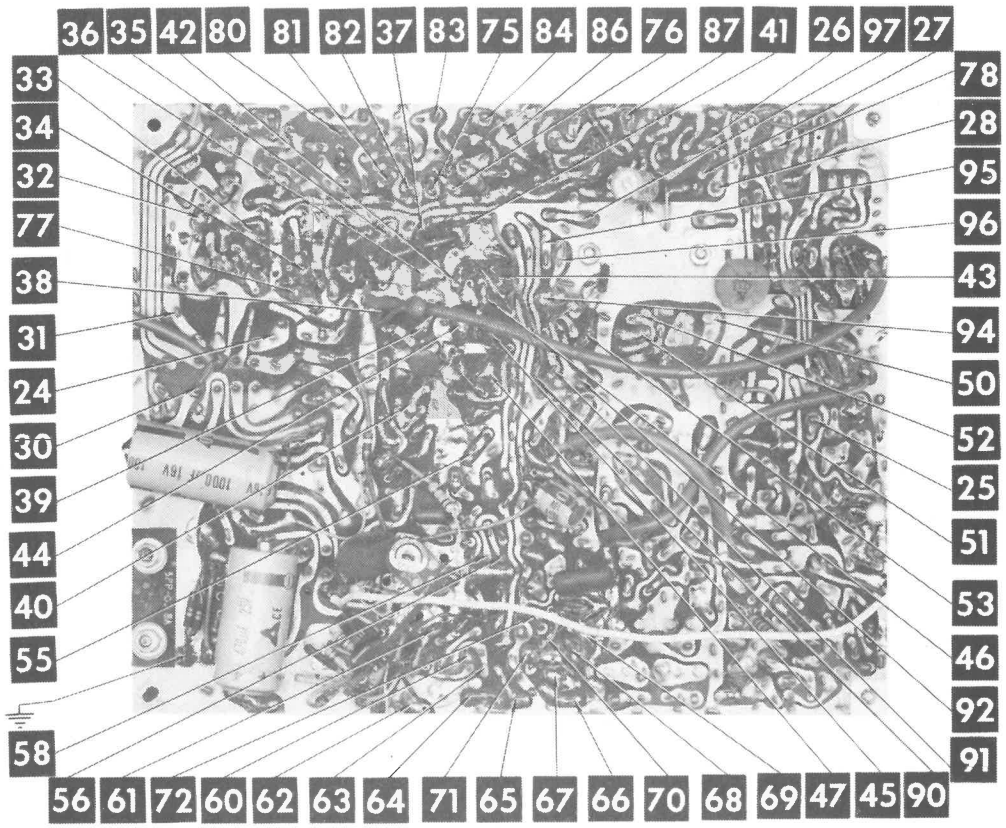

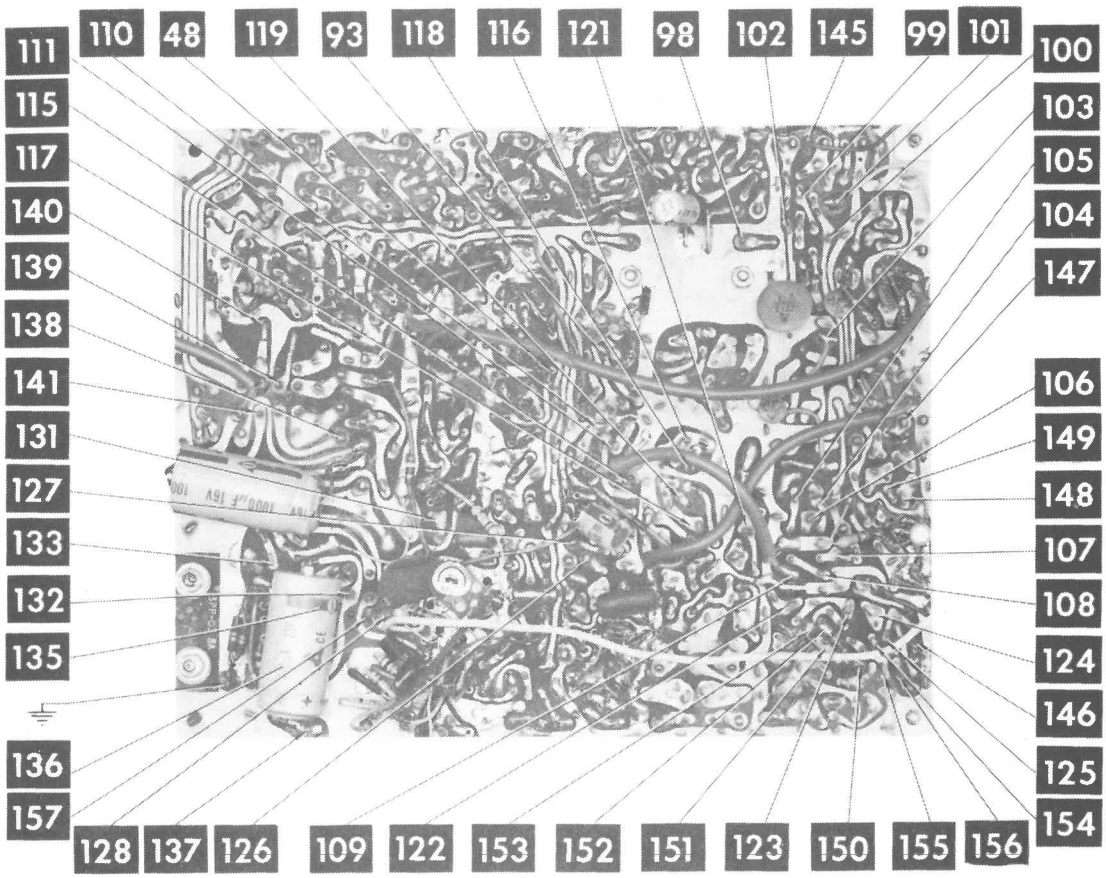

A Howard W. Sams CIRCUITRACE® Photo

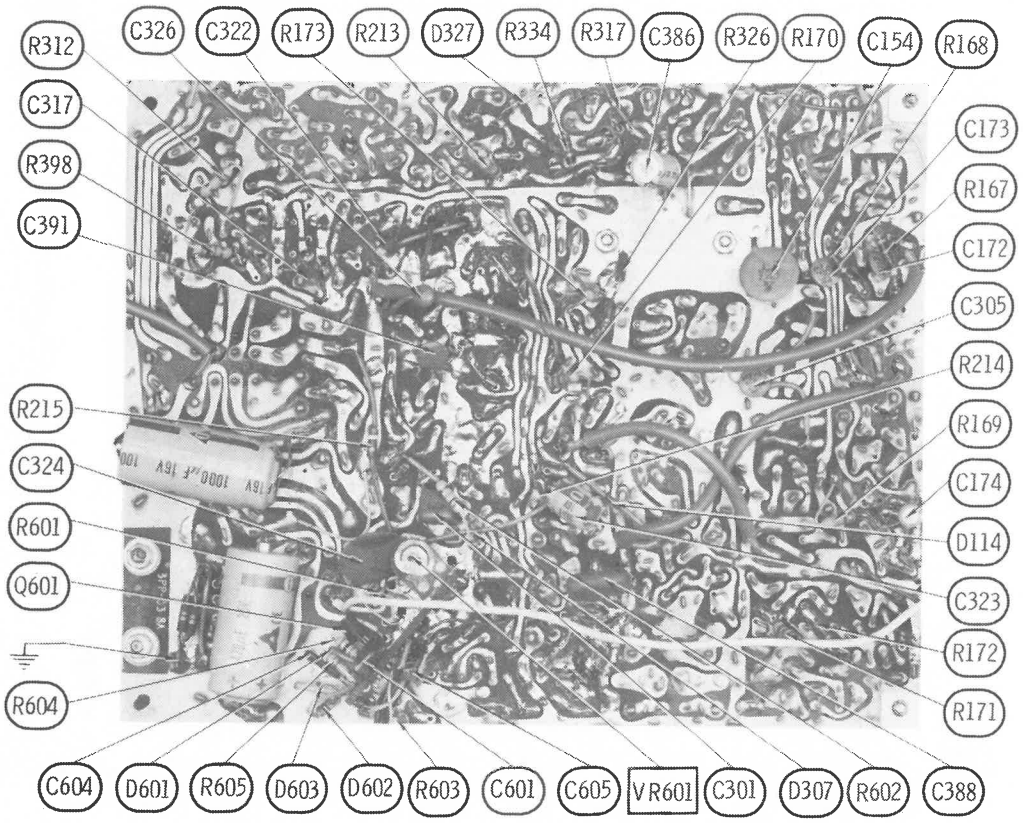

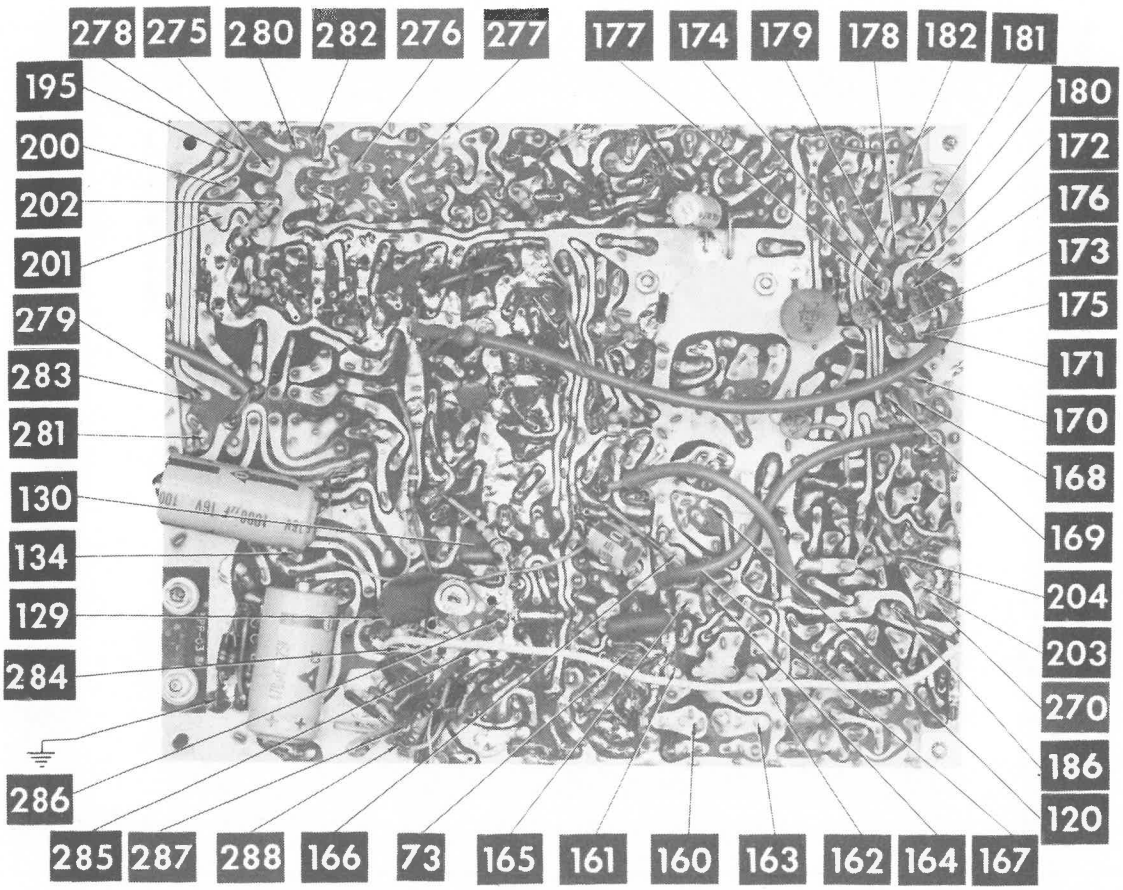

A Howard W. Sams CIRCUITRACE® Photo

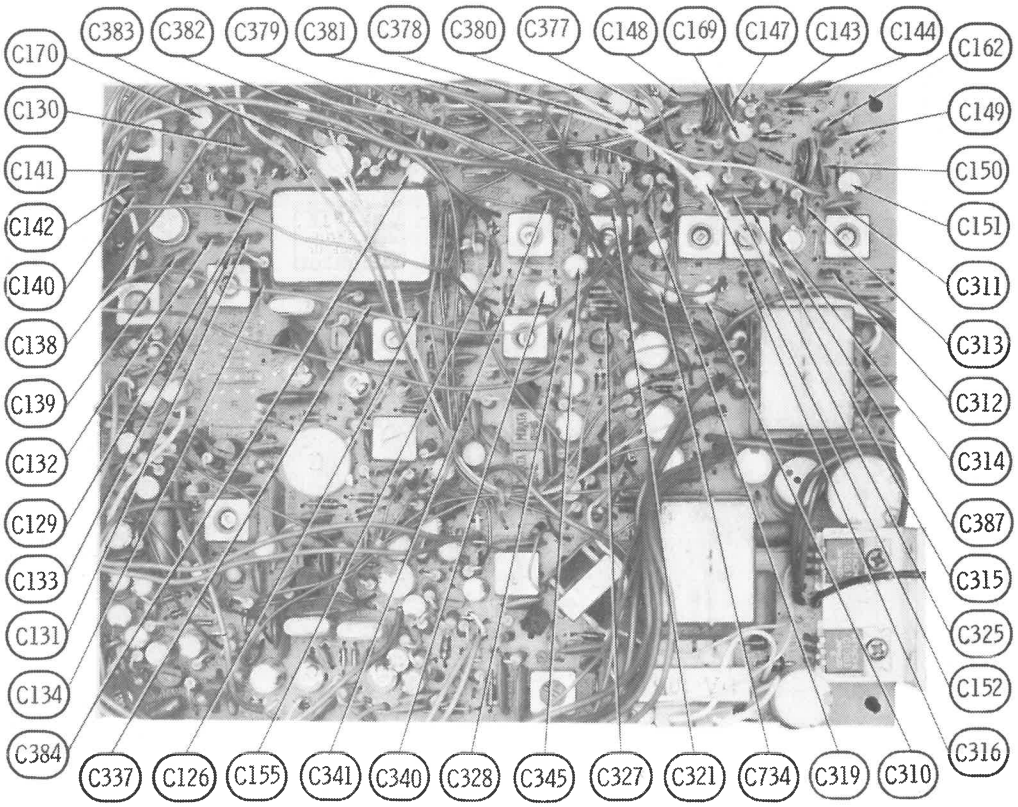
C383
C382
C379
C381
C378
C380
C377
C148
C169
C147
C143
C144
C162
C170
C130
C141
C142
C140
C138
C139
C132
C129
C133
C131
C134
C384
C149
C150
C151
C311
C313
C312
C314
C387
C315
C325
C152
C316
C337
C126
C155
C341
C340
C328
C345
C327
C321
C734
C319
C310

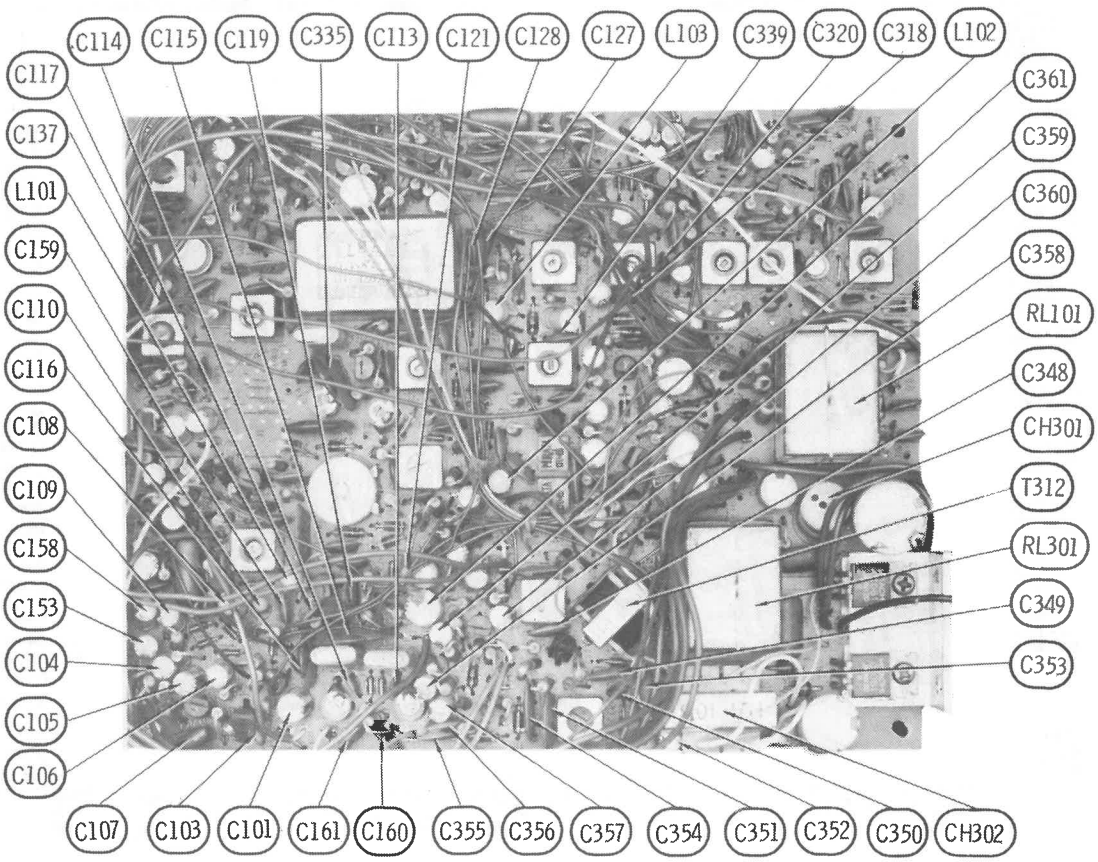
C114
C115
C119
C335
C113
C121
C128
C127
L103
C339
C320
C318
L102
C117
C137
L101
C159
C110
C116
C108
C109
C158
C153
C104
C105
C106
C361
C359
C360
C358
RL101
C348
CH301
T312
RL301
C349
C353
C107
C103
C101
C161
C160
C355
C356
C357
C354
C351
C352
C350
CH302

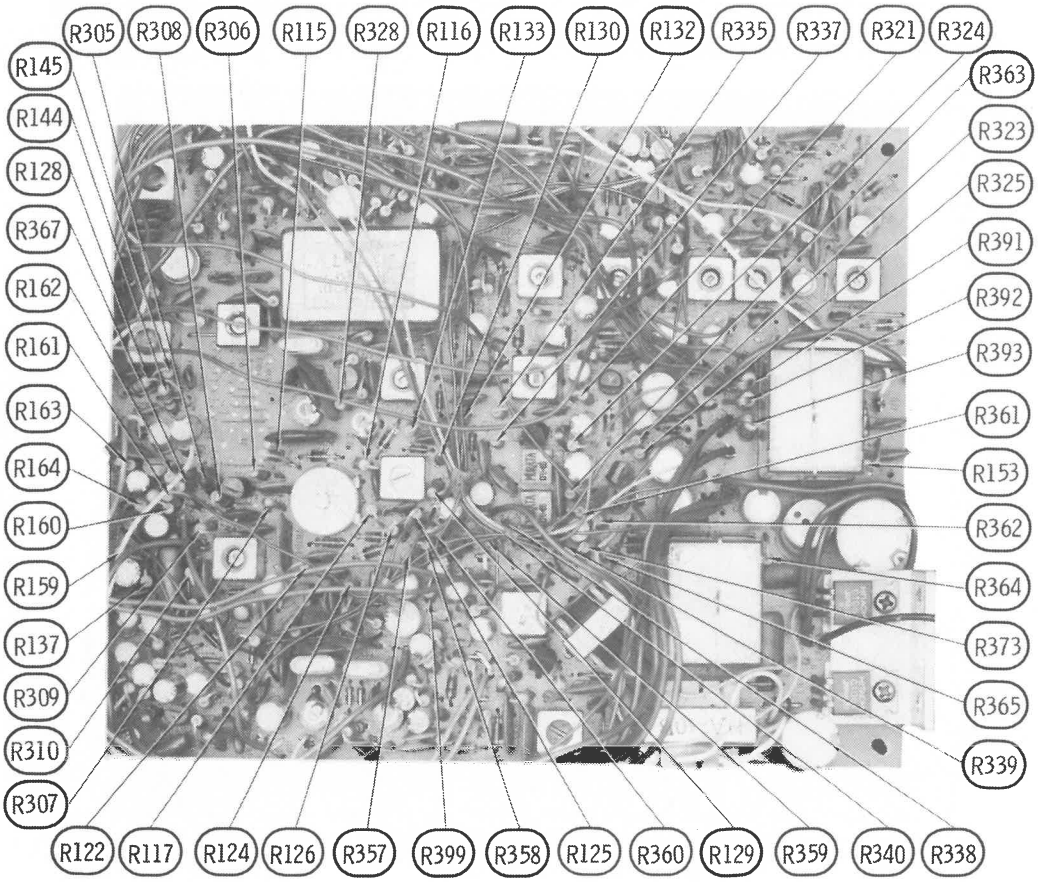
R305
R308
R306
R115
R328
R116
R133
R130
R132
R335
R337
R321
R324
R145
R144
R128
R367
R162
R161
R163
R164
R160
R159
R137
R309
R310
R307
R363
R323
R325
R391
R392
R393
R361
R153
R362
R364
R373
R365
R339
R122
R117
R124
R126
R357
R399
R358
R125
R360
R129
R359
R340
R338

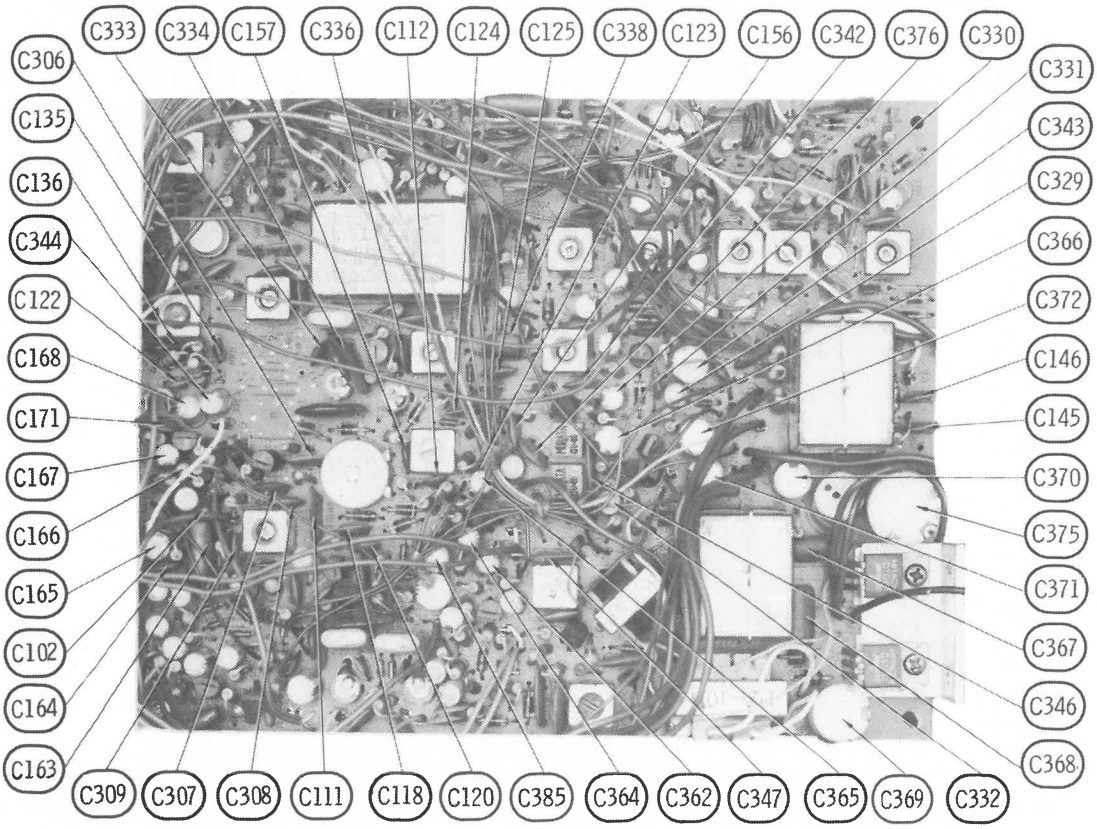
C333
C334
C157
C336
C112
C124
C125
C338
C123
C156
C342
C376
C330
C306
C135
C136
C344
C122
C168
C171
C167
C166
C165
C102
C164
C163
C331
C343
C329
C366
C372
C146
C145
C370
C375
C371
C367
C346
C368
C309
C307
C308
C111
C118
C120
C385
C364
C362
C347
C365
C369
C332

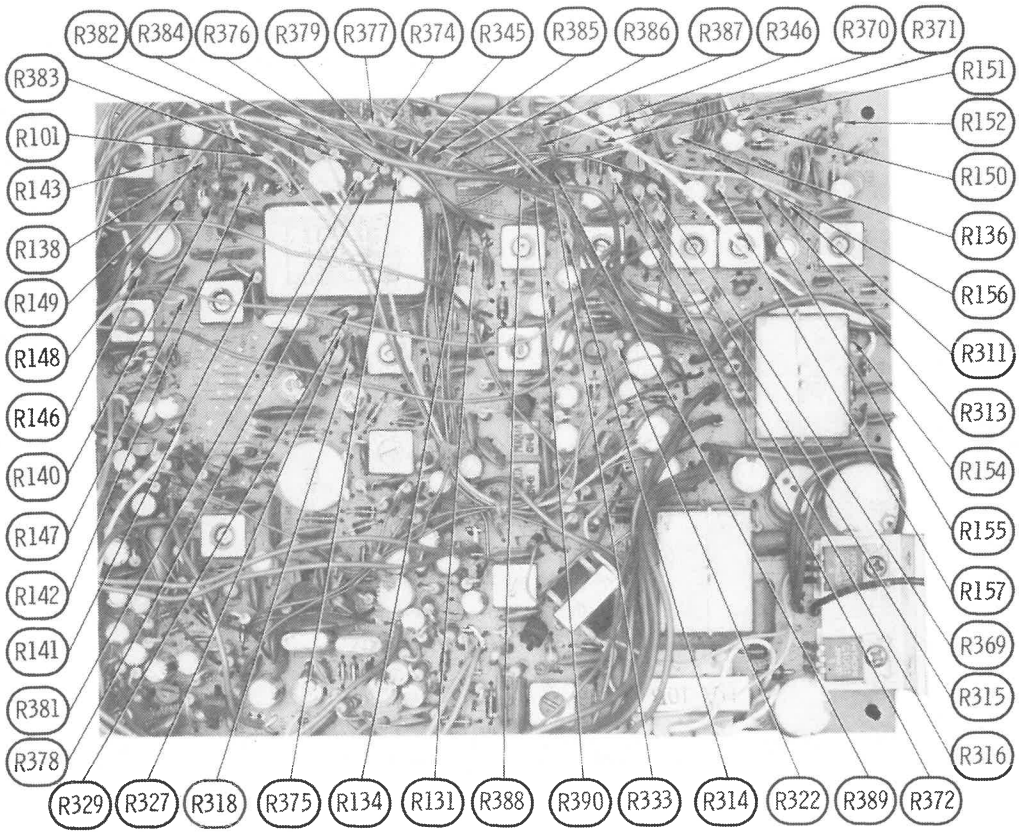
R382
R384
R376
R379
R377
R374
R345
R385
R386
R387
R346
R370
R371
R383
R101
R143
R138
R149
R148
R146
R140
R147
R142
R141
R381
R378
R151
R152
R150
R136
R156
R311
R313
R154
R155
R157
R369
R315
R316
R329
R327
R318
R375
R134
R131
R388
R390
R333
R314
R322
R389
R372

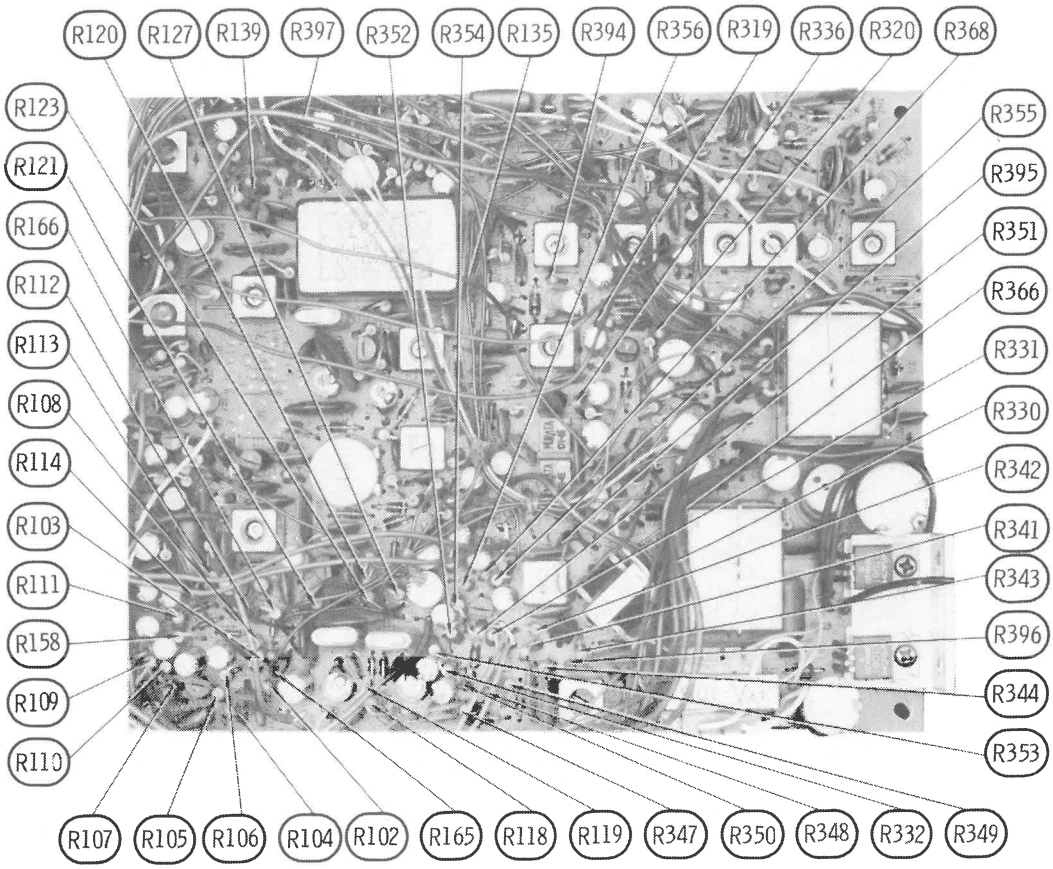
R120
R127
R139
R397
R352
R354
R135
R394
R356
R319
R336
R320
R368
R123
R121
R166
R112
R113
R108
R114
R103
R111
R158
R109
R110
R355
R395
R351
R366
R331
R330
R342
R341
R343
R396
R344
R353
R107
R105
R106
R104
R102
R165
R118
R119
R347
R350
R348
R332
R349

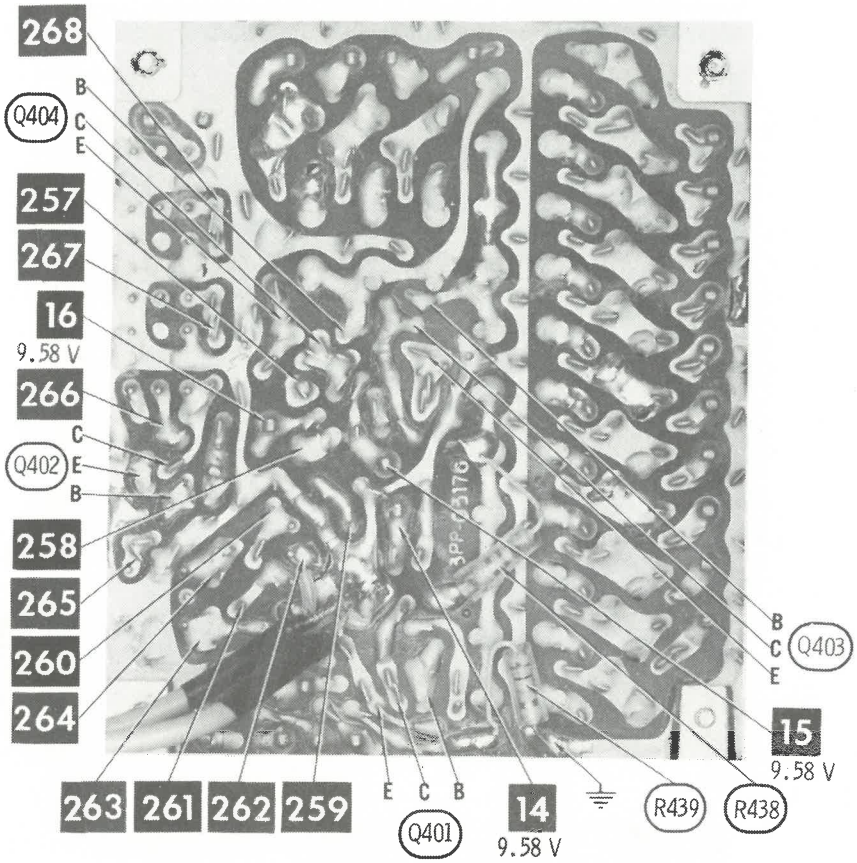
268
Q404
B
C
E
257
267
16
9.58 V
266
C
Q402
E
B
258
265
260
264
263
261
262
259
E
C
B
Q401
14
9.58 V
R439
R438
15
9.58 V
B
C
E
Q403

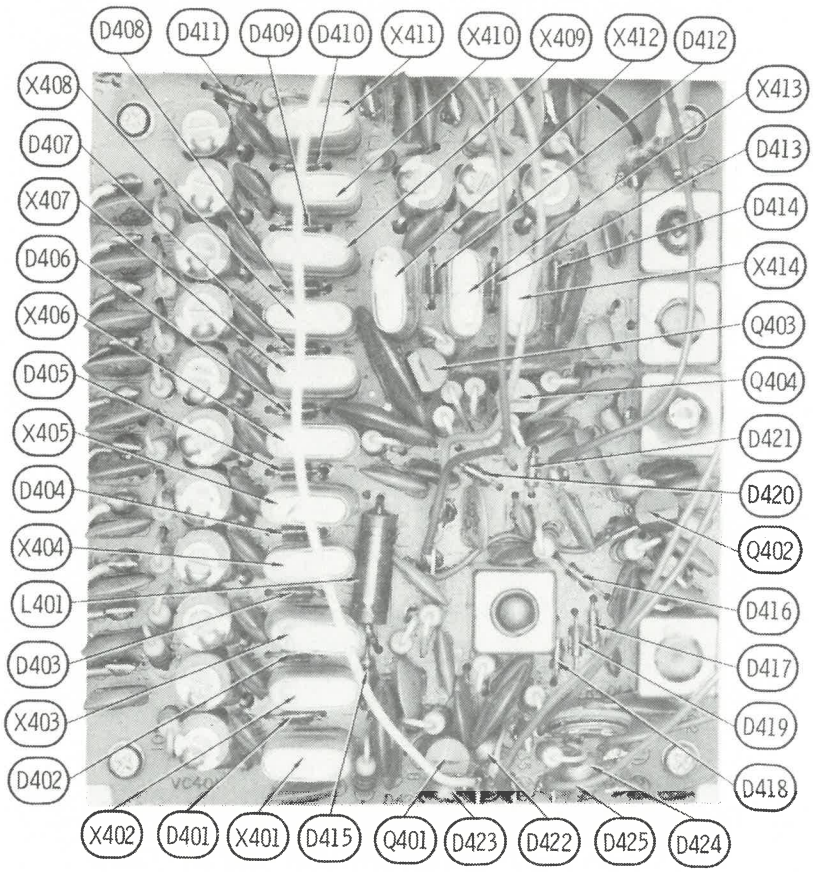
D408
D411
D409
D410
X411
X410
X409
X412
D412
X408
D407
X407
D406
X406
D405
X405
D404
X404
L401
D403
X403
D402
X402
D401
X401
D415
Q401
D423
D422
D425
D424
X413
D413
D414
X414
Q403
Q404
D421
D420
Q402
D416
D417
D419
D418

A Howard W. Sams CIRCUITRACE® Photo

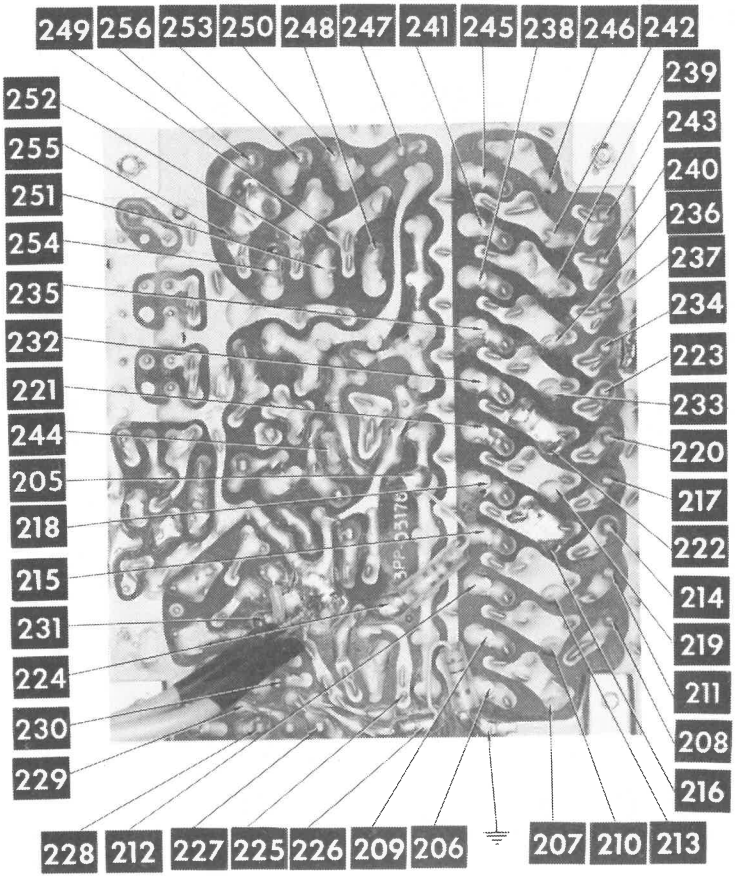

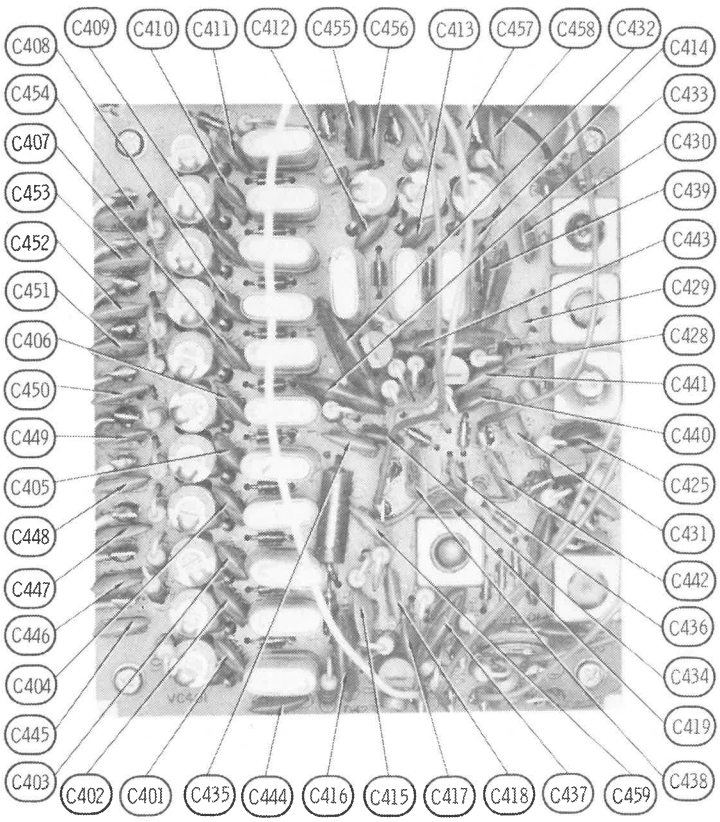

A Howard W. Sams CIRCUITRACE® Photo

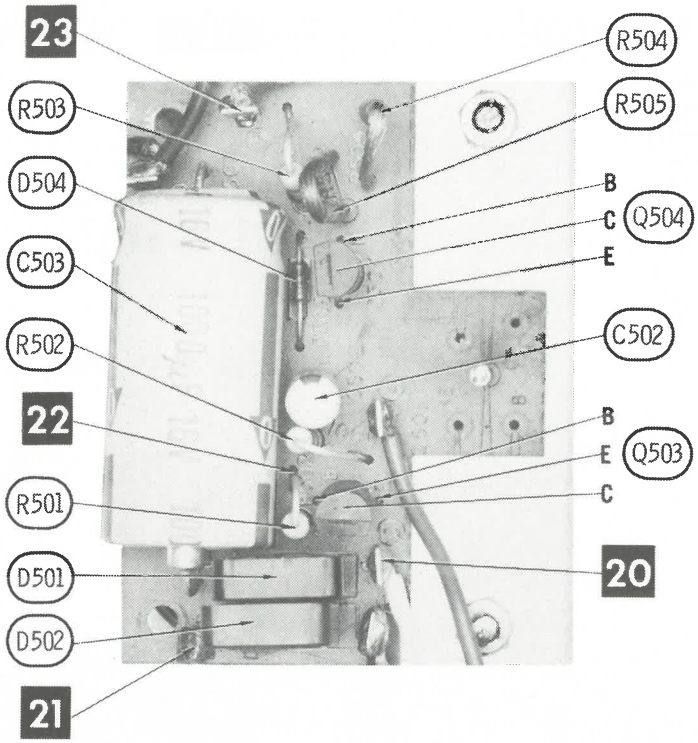

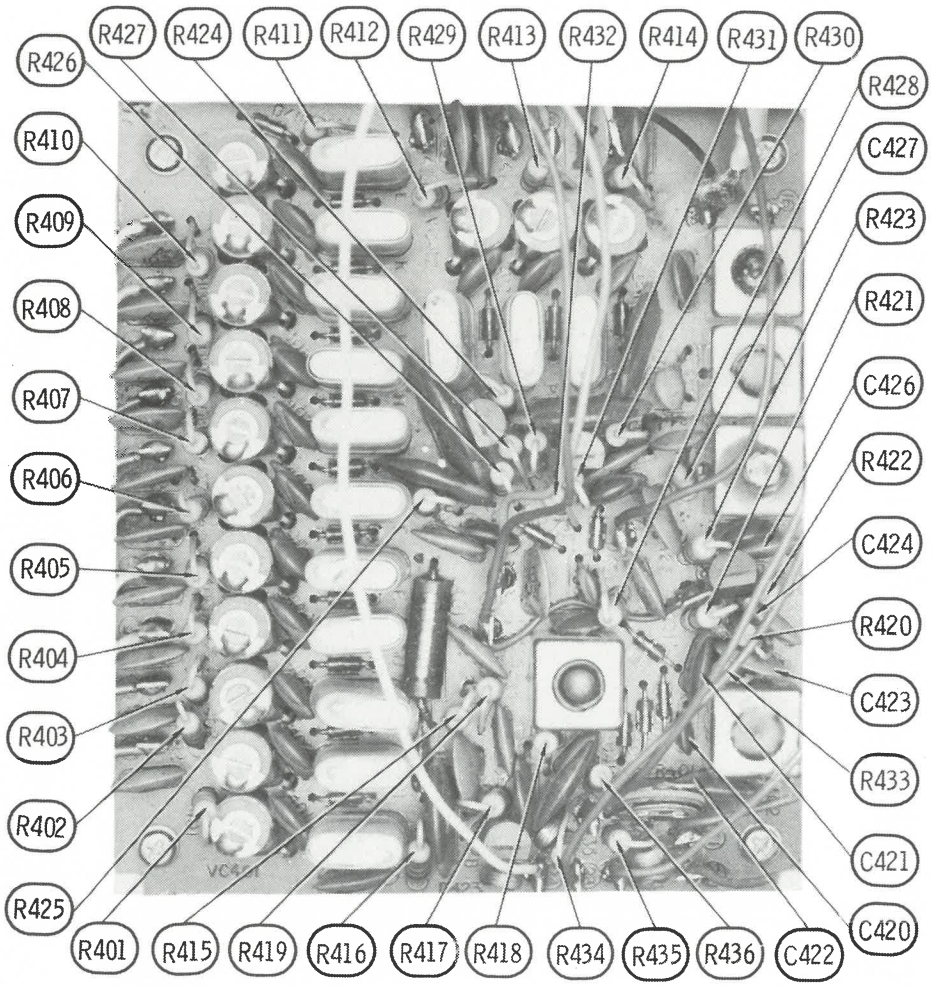

A Howard W. Sams CIRCUITRACE® Photo

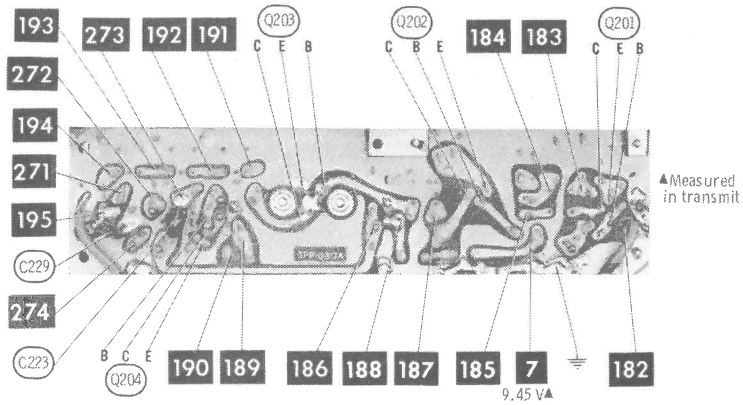

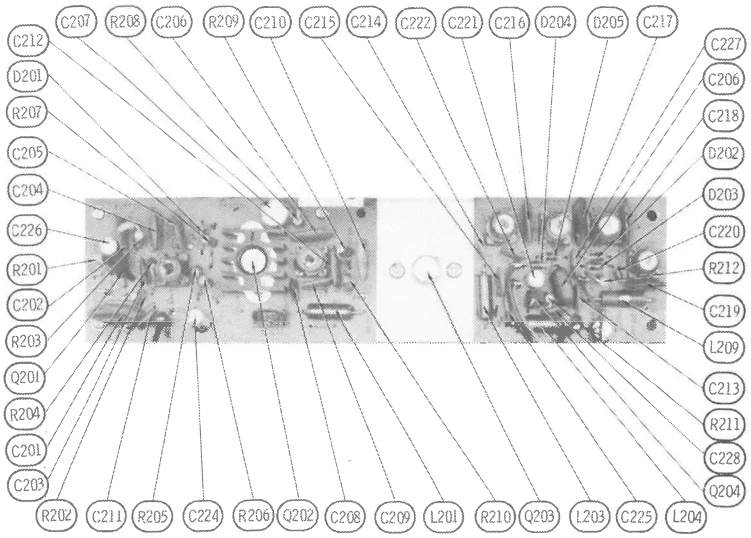

PARTS LIST AND DESCRIPTION

(When ordering parts, state Model, Part Number, and Description.)

SEMICONDUCTORS

ITEM No.	TYPE / MFGR. No. / PART No.	REPLACEMENT DATA						
		GENERAL ELECTRIC PART No.	INTERNATIONAL RECTIFIER PART No.	MALLORY PART No.	MOTOROLA PART No.	RCA PART No.	SPRAGUE PART No.	SYLVANIA PART No.
D1	1S1588	GE-300	D200	PTC214	HEPR0602	SK3100	RT218	ECG 177
D102	1S1588	GE-300	D200	PTC214	HEPR0602	SK3100	RT218	ECG 177
D104	1S1588	GE-300	D200	PTC214	HEPR0602	SK3100	RT218	ECG 177
D105	1S1588	GE-300	D200	PTC214	HEPR0602	SK3100	RT218	ECG 177
D106	1S1588	GE-300	D200	PTC214	HEPR0602	SK3100	RT218	ECG 177
D107	1S1588	GE-300	D200	PTC214	HEPR0602	SK3100	RT218	ECG 177
D108	1S73	1N34AS	1N34A	PTC207	HEP134	SK3087		ECG 109
D109	1S73	1N34AS	1N34A	PTC207	HEP134	SK3087		ECG 109
D110	1S73	1N34AS	1N34A	PTC207	HEP134	SK3087		ECG 109
D111	1S73	1N34AS	1N34A	PTC207	HEP134	SK3087		ECG 109
D112	1S1588	GE-300	D200	PTC214	HEPR0602	SK3100	RT218	ECG 177
D113	1S1588	GE-300	D200	PTC214	HEPR0602	SK3100	RT218	ECG 177
D114	1S1588	GE-300	D200	PTC214	HEPR0602	SK3100	RT218	ECG 177
D115	1S1588	GE-300	D200	PTC214	HEPR0602	SK3100	RT218	ECG 177
D116	1S1588	GE-300	D200	PTC214	HEPR0602	SK3100	RT218	ECG 177
D117	1S1588	GE-300	D200	PTC214	HEPR0602	SK3100	RT218	ECG 177
D118	1S1588	GE-300	D200	PTC214	HEPR0602	SK3100	RT218	ECG 177
D119	1S1588	GE-300	D200	PTC214	HEPR0602	SK3100	RT218	ECG 177
D120	1S1588	GE-300	D200	PTC214	HEPR0602	SK3100	RT218	ECG 177
D121	1S1588	GE-300	D200	PTC214	HEPR0602	SK3100	RT218	ECG 177
D122	1S1588	GE-300	D200	PTC214	HEPR0602	SK3100	RT218	ECG 177
D123	1S1588	GE-300	D200	PTC214	HEPR0602	SK3100	RT218	ECG 177
D124	1S1588	GE-300	D200	PTC214	HEPR0602	SK3100	RT218	ECG 177
D125	1S1588	GE-300	D200	PTC214	HEPR0602	SK3100	RT218	ECG 177
D127	1S1588	GE-300	D200	PTC214	HEPR0602	SK3100	RT218	ECG 177
D128	1S1588	GE-300	D200	PTC214	HEPR0602	SK3100	RT218	ECG 177
D129	1S34	1N34AS	1N34A	PTC207	HEP134	SK3087		ECG 109
D130	1S34	1N34AS	1N34A	PTC207	HEP134	SK3087		ECG 109
D131	1S34	1N34AS	1N34A	PTC207	HEP134	SK3087		ECG 109
D132	1S34	1N34AS	1N34A	PTC207	HEP134	SK3087		ECG 109
D133	1S34	1N34AS	1N34A	PTC207	HEP134	SK3087		ECG 109
D134	02Z9.1A(9.1 V Zener)	GEZD-9.1	Z-1210	PTC505	HEPZ0412	SK3060	RT240	ECG 139
D135	1S1588	GE-300	D200	PTC214	HEPR0602	SK3100	RT218	ECG 177
D136	1S1588	GE-300	D200	PTC214	HEPR0602	SK3100	RT218	ECG 177
D137	1S1588	GE-300	D200	PTC214	HEPR0602	SK3100	RT218	ECG 177
D138	1S1588	GE-300	D200	PTC214	HEPR0602	SK3100	RT218	ECG 177
D201	1S1588	GE-300	D200	PTC214	HEPR0602	SK3100	RT218	ECG 177
D202	1S34	1N34AS	1N34A	PTC207	HEP134	SK3087		ECG 109

PARTS LIST AND DESCRIPTION (CONTINUED)

(When ordering parts, state Model, Part Number, and Description.)

SEMICONDUCTORS (cont)

ITEM No.	TYPE / MFGR. No./PART No.	REPLACEMENT DATA						
		GENERAL ELECTRIC PART No.	INTERNATIONAL RECTIFIER PART No.	MALLORY PART No.	MOTOROLA PART No.	RCA PART No.	SPRAGUE PART No.	SYLVANIA PART No.
D203	1S34	1N34AS	1N34A	PTC207	HEP134	SK3087		ECG 109
D204	1S34	1N34AS	1N34A	PTC207	HEP134	SK3087		ECG 109
D205	1S34	1N34AS	1N34A	PTC207	HEP134	SK3087		ECG 109
D301	1S1588	GE-300	D200	PTC214	HEPR0602	SK3100	RT218	ECG 177
D302	1S34	1N34AS	1N34A	PTC207	HEP134	SK3087		ECG 109
D303	1S34	1N34AS	1N34A	PTC207	HEP134	SK3087		ECG 109
D304	1S1588	GE-300	D200	PTC214	HEPR0602	SK3100	RT218	ECG 177
D305	1S34	1N34AS	1N34A	PTC207	HEP134	SK3087		ECG 109
D306	1S34	1N34AS	1N34A	PTC207	HEP134	SK3087		ECG 109
D307	1S1588	GE-300	D200	PTC214	HEPR0602	SK3100	RT218	ECG 177
D308	1S34	1N34AS	1N34A	PTC207	HEP134	SK3087		ECG 109
D309	1S34	1N34AS	1N34A	PTC207	HEP134	SK3087		ECG 109
D310	1S34	1N34AS	1N34A	PTC207	HEP134	SK3087		ECG 109
D311	1S1588	GE-300	D200	PTC214	HEPR0602	SK3100	RT218	ECG 177
D312	1S1588	GE-300	D200	PTC214	HEPR0602	SK3100	RT218	ECG 177
D313	1S1588	GE-300	D200	PTC214	HEPR0602	SK3100	RT218	ECG 177
D314	1S1588	GE-300	D200	PTC214	HEPR0602	SK3100	RT218	ECG 177
D315	1S34	1N34AS	1N34A	PTC207	HEP134	SK3087		ECG 109
D316	1S34	1N34AS	1N34A	PTC207	HEP134	SK3087		ECG 109
D317	1S73	1N34AS	1N34A	PTC207	HEP134	SK3087		ECG 109
D318	10D4	GE-504A	8D4 or 5A4D	PTC201 or PTC202	HEPR0052	SK3030 or SK3031	RT213 or RT214	ECG 116 or ECG 117
D319	10D4	GE-504A	8D4 or 5A4D	PTC201 or PTC202	HEPR0052	SK3030 or SK3031	RT213 or RT214	ECG 116 or ECG 117
D320	10D4	GE-504A	8D4 or 5A4D	PTC201 or PTC202	HEPR0052	SK3030 or SK3031	RT213 or RT214	ECG 116 or ECG 117
D321	02Z9.1A(9.1 V Zener)	GEZD-9.1	Z-1210	PTC505	HEPZ0412	SK3060	RT240	ECG 139
D322	02Z9.1A(9.1 V Zener)	GEZD-9.1	Z-1210	PTC505	HEPZ0412	SK3060	RT240	ECG 139
D323	1S1588	GE-300	D200	PTC214	HEPR0602	SK3100	RT218	ECG 177
D324	02Z9.1A(9.1 V Zener)	GEZD-9.1	Z-1210	PTC505	HEPZ0412	SK3060	RT240	ECG 139
D325	1S1588	GE-300	D200	PTC214	HEPR0602	SK3100	RT218	ECG 177
D326	1S1588	GE-300	D200	PTC214	HEPR0602	SK3100	RT218	ECG 177
D327	1S73	1N34AS	1N34A	PTC207	HEP134	SK3087		ECG 109
D401	1S1588	GE-300	D200	PTC214	HEPR0602	SK3100	RT218	ECG 177
D402	1S1588	GE-300	D200	PTC214	HEPR0602	SK3100	RT218	ECG 177
D403	1S1588	GE-300	D200	PTC214	HEPR0602	SK3100	RT218	ECG 177
D404	1S1588	GE-300	D200	PTC214	HEPR0602	SK3100	RT218	ECG 177
D405	1S1588	GE-300	D200	PTC214	HEPR0602	SK3100	RT218	ECG 177
D406	1S1588	GE-300	D200	PTC214	HEPR0602	SK3100	RT218	ECG 177
D407	1S1588	GE-300	D200	PTC214	HEPR0602	SK3100	RT218	ECG 177
D408	1S1588	GE-300	D200	PTC214	HEPR0602	SK3100	RT218	ECG 177
D409	1S1588	GE-300	D200	PTC214	HEPR0602	SK3100	RT218	ECG 177
D410	1S1588	GE-300	D200	PTC214	HEPR0602	SK3100	RT218	ECG 177
D411	1S1588	GE-300	D200	PTC214	HEPR0602	SK3100	RT218	ECG 177
D412	1S1588	GE-300	D200	PTC214	HEPR0602	SK3100	RT218	ECG 177
D413	1S1588	GE-300	D200	PTC214	HEPR0602	SK3100	RT218	ECG 177
D414	1S1588	GE-300	D200	PTC214	HEPR0602	SK3100	RT218	ECG 177
D415	1S1658	GE-90 (8)	D201 (8)		HEPR2503 (8)	SK3126 (8)		
D416	1S1588	GE-300	D200	PTC214	HEPR0602	SK3100	RT218	ECG 177
D417	1S1588	GE-300	D200	PTC214	HEPR0602	SK3100	RT218	ECG 177
D418	1S1588	GE-300	D200	PTC214	HEPR0602	SK3100	RT218	ECG 177
D419	1S1588	GE-300	D200	PTC214	HEPR0602	SK3100	RT218	ECG 177
D420	1S1588	GE-300	D200	PTC214	HEPR0602	SK3100	RT218	ECG 177
D421	1S1588	GE-300	D200	PTC214	HEPR0602	SK3100	RT218	ECG 177
D422	1S1588	GE-300	D200	PTC214	HEPR0602	SK3100	RT218	ECG 177
D423	1S1588	GE-300	D200	PTC214	HEPR0602	SK3100	RT218	ECG 177
D424	1S1588	GE-300	D200	PTC214	HEPR0602	SK3100	RT218	ECG 177
D425	1S1588	GE-300	D200	PTC214	HEPR0602	SK3100	RT218	ECG 177
D501	S1RC20R	GE-504A (2)	8D4 (2) or 5A4D (2)	PTC201 (2)or PTC202 (2)	HEPR0052(2)	SK3030 (2) or SK3031 (2)	RT214 (2) or RT215 (2)	ECG 116 (2)or ECG 117 (2)
D502	S1RC20	GE-504A (2)	8D4 (2) or 5A4D (2)	PTC201 (2)or PTC202 (2)	HEPR0052(2)	SK3030 (2) or SK3031 (2)	RT214 (2) or RT215 (2)	ECG 116 (2)or ECG 117 (2)
D503	02Z9.1A(9.1 V Zener)	GEZD-9.1	Z-1210	PTC505	HEPZ0412	SK3060	RT240	ECG 139
D601	1S34	1N34AS	1N34A	PTC207	HEP134	SK3087		ECG 109
D602	1S34	1N34AS	1N34A	PTC207	HEP134	SK3087		ECG 109
D603	1S34	1N34AS	1N34A	PTC207	HEP134	SK3087		ECG 109
IC101	TA7045M							ECG 724
Q101	2SC711E	GE-62	TR-21	PTC123	HEP733	SK3122	RT102	ECG 199
Q102	2SC711E	GE-62	TR-21	PTC123	HEP733	SK3122	RT102	ECG 199
Q103	2SC739C	GE-11	TR-33	PTC132	HEP50	SK3018	RT108	ECG 107
Q104	2SC739C	GE-11	TR-33	PTC132	HEP50	SK3018	RT108	ECG 107
Q105	2SC710D	GE-10	TR-21	PTC121	HEP56	SK3122	RT102	ECG 123A
Q106	2SC711E	GE-62	TR-21	PTC123	HEP733	SK3122	RT102	ECG 199
Q107	2SC711E	GE-62	TR-21	PTC123	HEP733	SK3122	RT102	ECG 199
Q108	2SC711	GE-62	TR-21	PTC139	HEP733	SK3018	RT102	ECG 123A
Q109	2SB77	GE-52	IRTR-85	PTC109	HEP250	SK3004	RT121	ECG 102A
Q201	2SC773	GE-20	TR-21	PTC136	HEP736	SK3018	RT102	ECG 123A
Q202	2SC777	GE-45	TR-21	PTC144	HEPS3002	SK3024	RT114	ECG 225
Q203	2SC1239	GE-45	IRTR-65		HEPS3001	SK3049		ECG 224
Q204	2SC711E	GE-62	TR-21	PTC123	HEP733	SK3122	RT102	ECG 199
Q302	2SC710D	GE-10	TR-21	PTC121	HEP56	SK3122	RT102	ECG 123A
Q303	3SK35				HEPF2004	SK3050	RT180	ECG 222
Q304	3SK35				HEPF2004	SK3050	RT180	ECG 222
Q305	2SK30Y	GE-FET-2	FE-100	PTC152	HEPF0021	SK3116	RT175	ECG 132
Q306	2SC710D	GE-10	TR-21	PTC121	HEP56	SK3122	RT102	ECG 123A
Q307	2SC739C	GE-11	TR-33	PTC132	HEP50	SK3018	RT108	ECG 107
Q308	2SC710D	GE-10	TR-21	PTC121	HEP56	SK3122	RT102	ECG 123A
Q310	2SC710D	GE-10	TR-21	PTC121	HEP56	SK3122	RT102	ECG 123A
Q311	2SC710D	GE-10	TR-21	PTC121	HEP56	SK3122	RT102	ECG 123A
Q312	2SC711E	GE-62	TR-21	PTC123	HEP733	SK3122	RT102	ECG 199
Q313	2SC711E	GE-62	TR-21	PTC123	HEP733	SK3122	RT102	ECG 199
Q314	2SC712E	GE-62	TR-21	PTC139	HEP56	SK3124	RT102	ECG 123A
Q315	2SC1061A	GE-28	IRTR-76	PTC110	HEPS5003	SK3041	RT154	ECG 152
Q316	2SC1061A	GE-28	IRTR-76	PTC110	HEPS5003	SK3041	RT154	ECG 152
Q318	2SC711E	GE-62	TR-21	PTC123	HEP733	SK3122	RT102	ECG 199
Q319	2SK30Y	GE-FET-2	FE-100	PTC152	HEPF0021	SK3116	RT175	ECG 132
Q320	2SC711E	GE-62	TR-21	PTC123	HEP733	SK3122	RT102	ECG 199
Q321	2SC711E	GE-62	TR-21	PTC123	HEP733	SK3122	RT102	ECG 199
Q322	2SC711E	GE-62	TR-21	PTC123	HEP733	SK3122	RT102	ECG 199
Q323	2SC711E	GE-62	TR-21	PTC123	HEP733	SK3122	RT102	ECG 199
Q401	2SC739C	GE-11	TR-33	PTC132	HEP50	SK3018	RT108	ECG 107
Q402	2SC738D	GE-11	TR-33	PTC132	HEP50	SK3018	RT108	ECG 107

(CONTINUED ON PAGE 122)

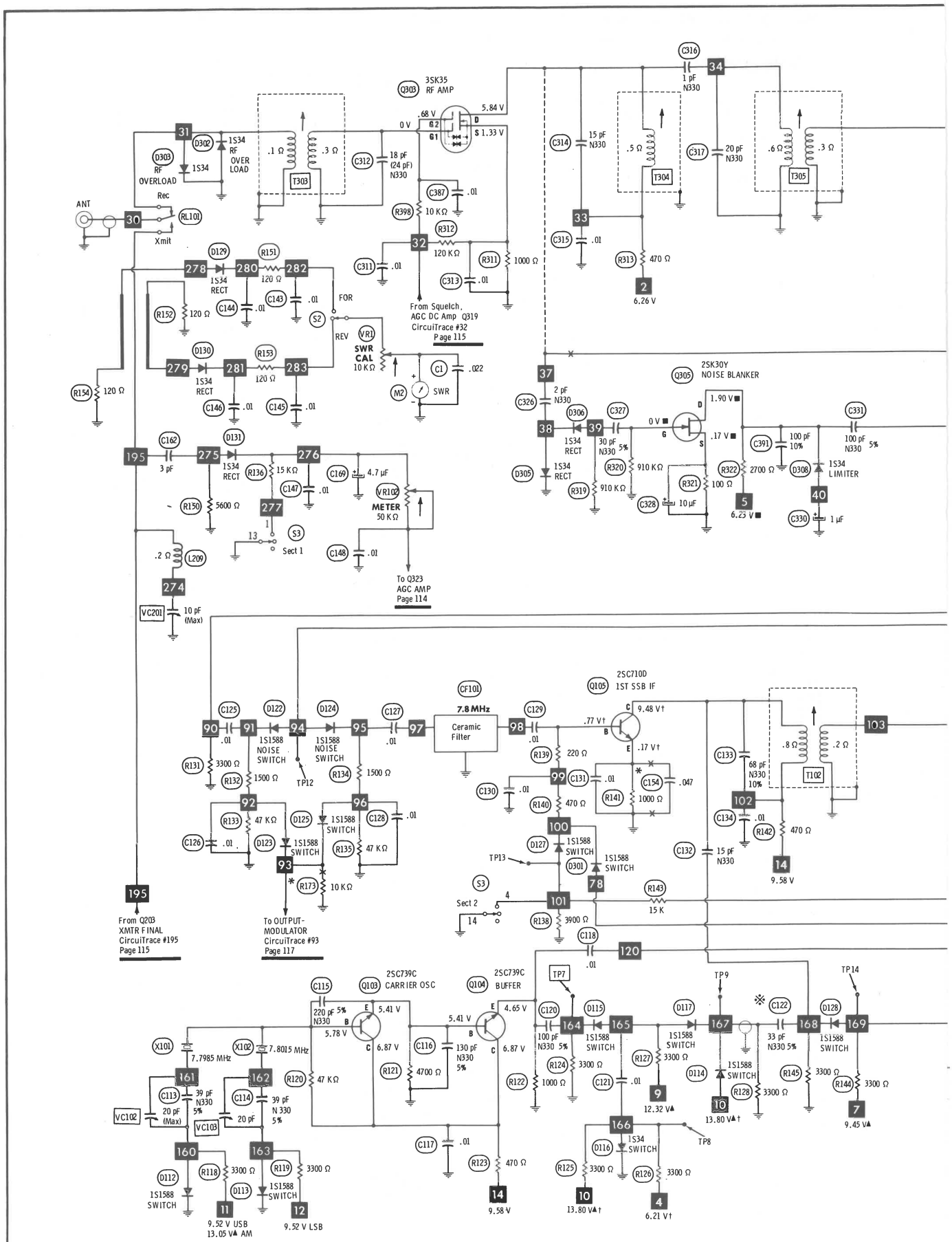

SEE NOTES ON PAGE 120

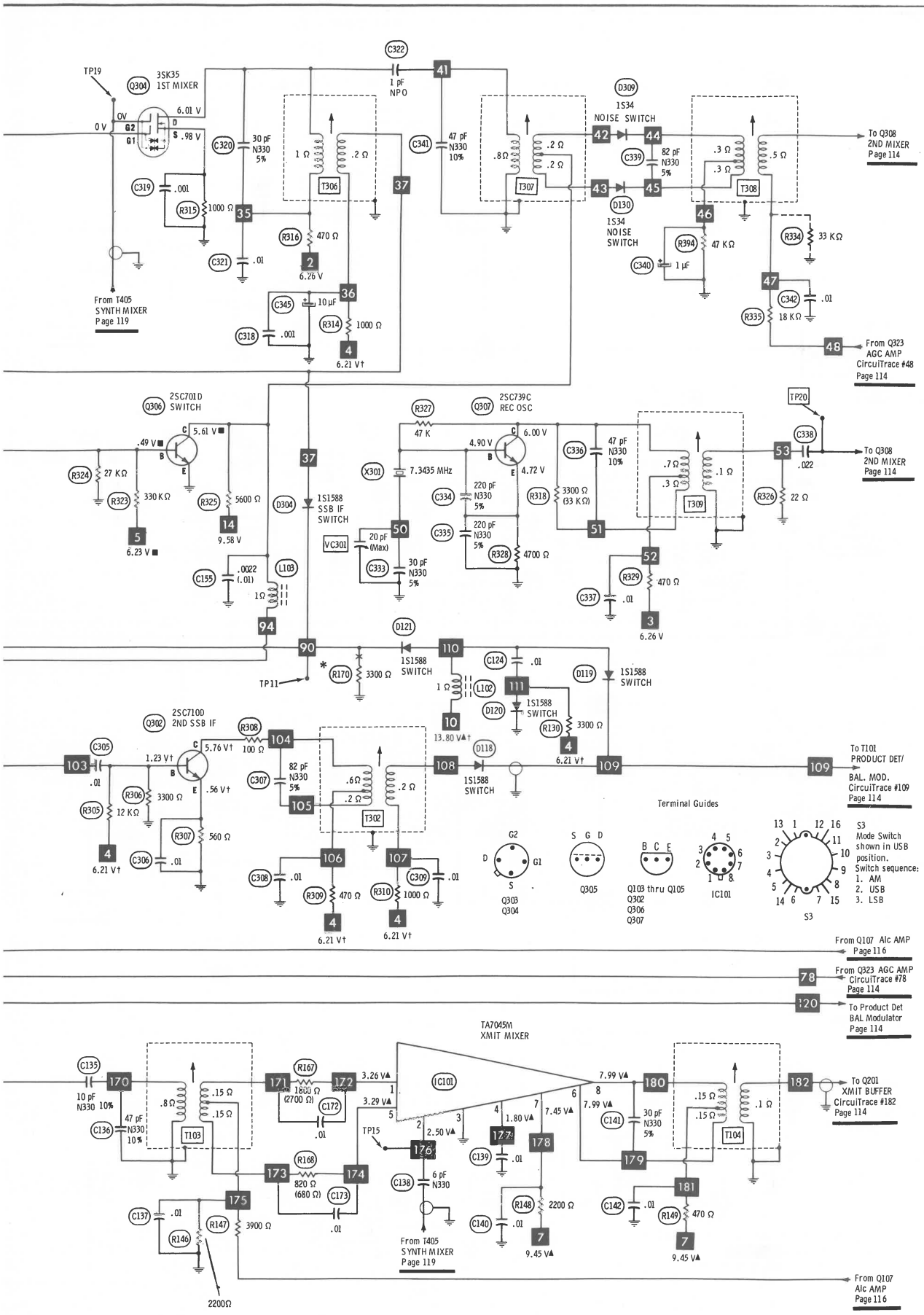

ROBYN MODEL SS-747B

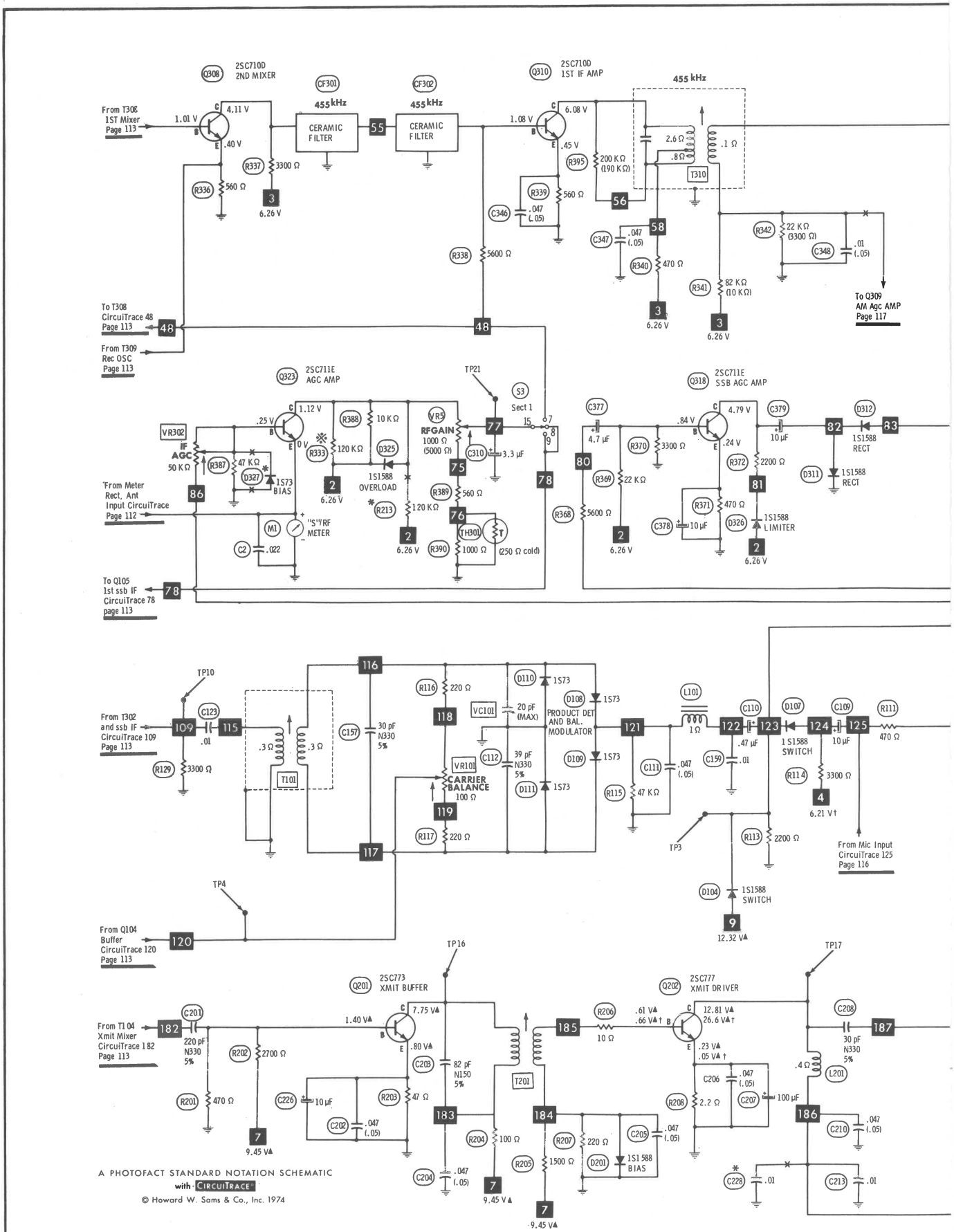

SEE NOTES ON PAGE 120

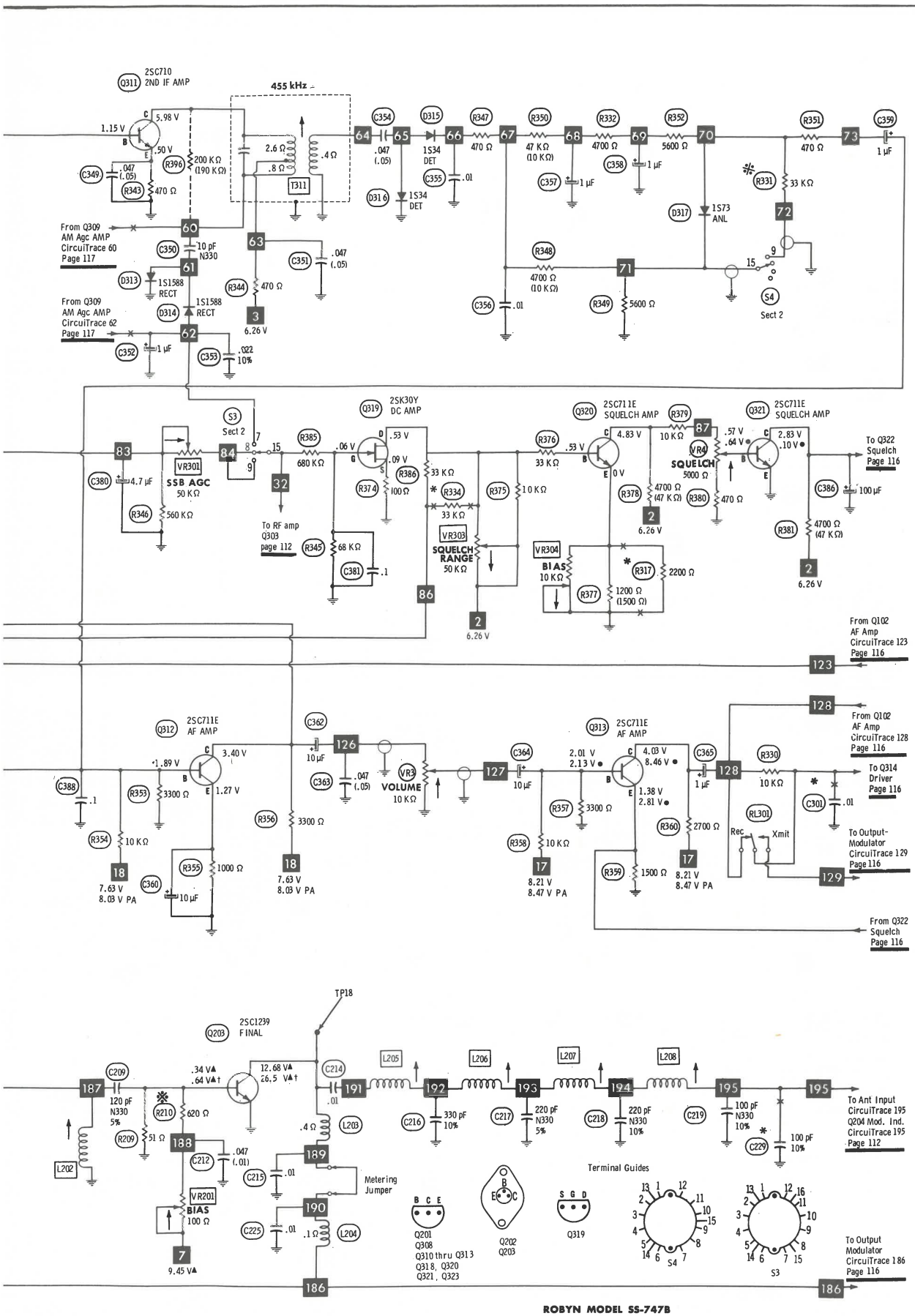

ROBYN MODEL SS-747B

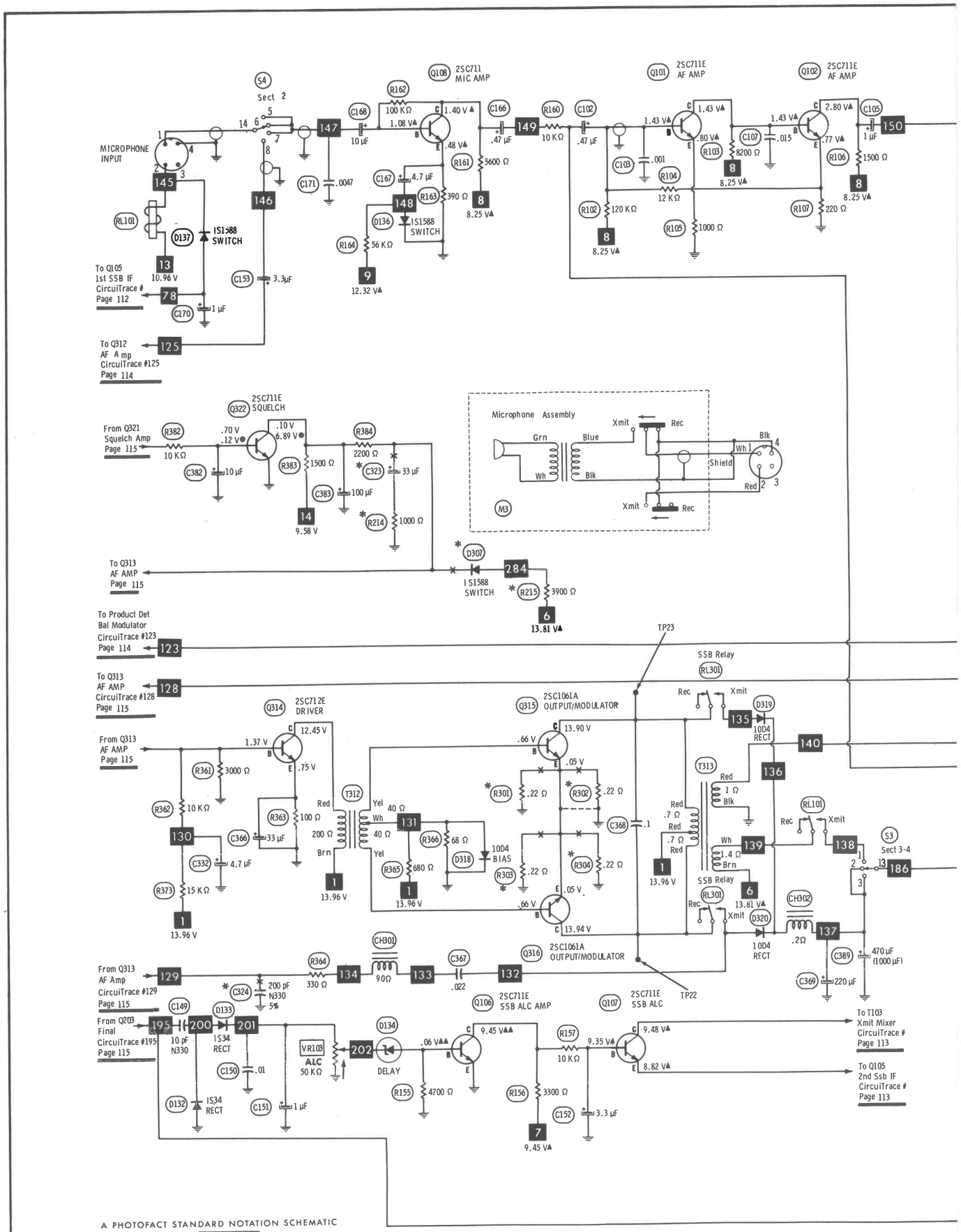

A PHOTOFACT STANDARD NOTATION SCHEMATIC
with CIRCUITRACE™

SEE NOTES ON PAGE 120

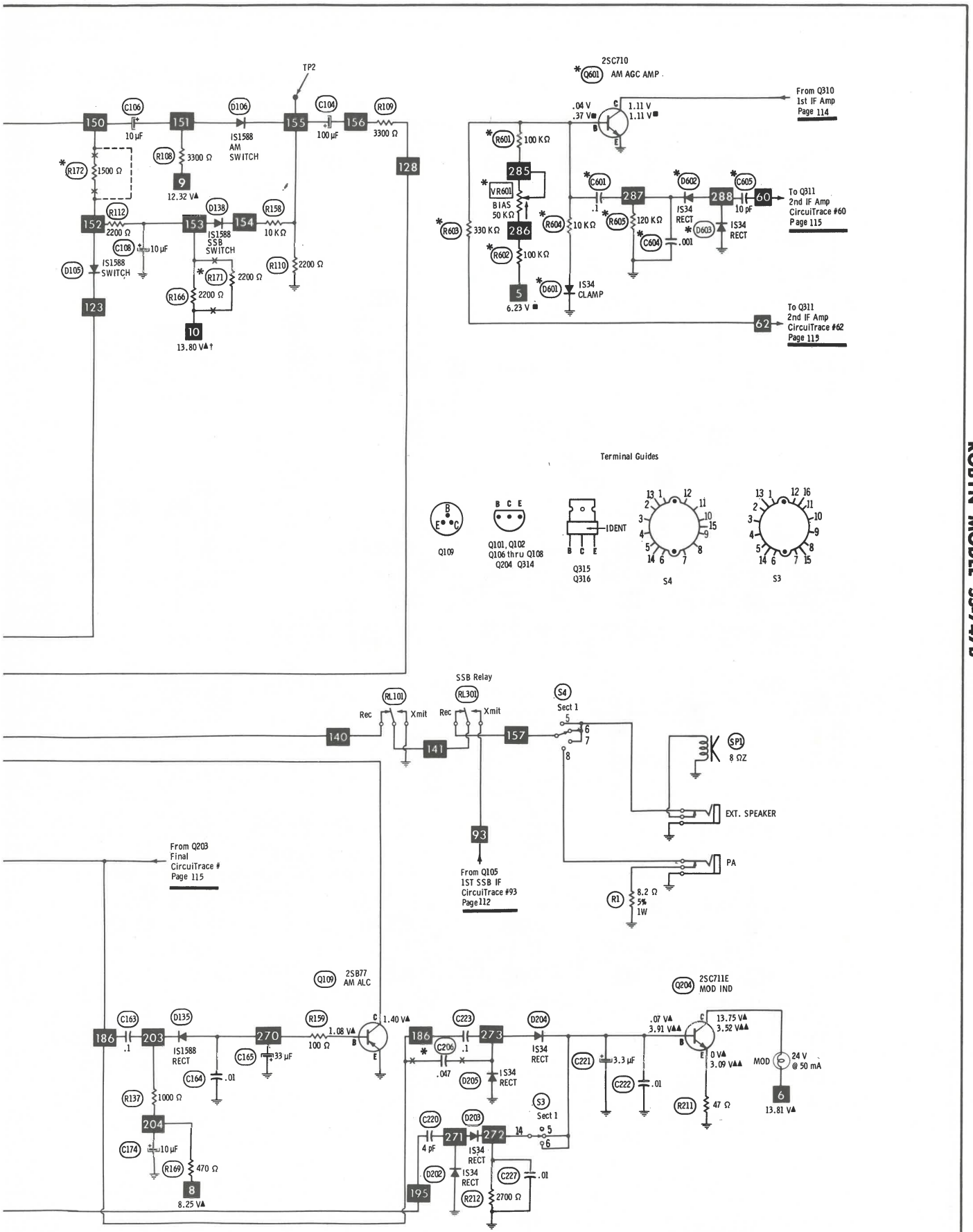

ROBYN MODEL SS-747B

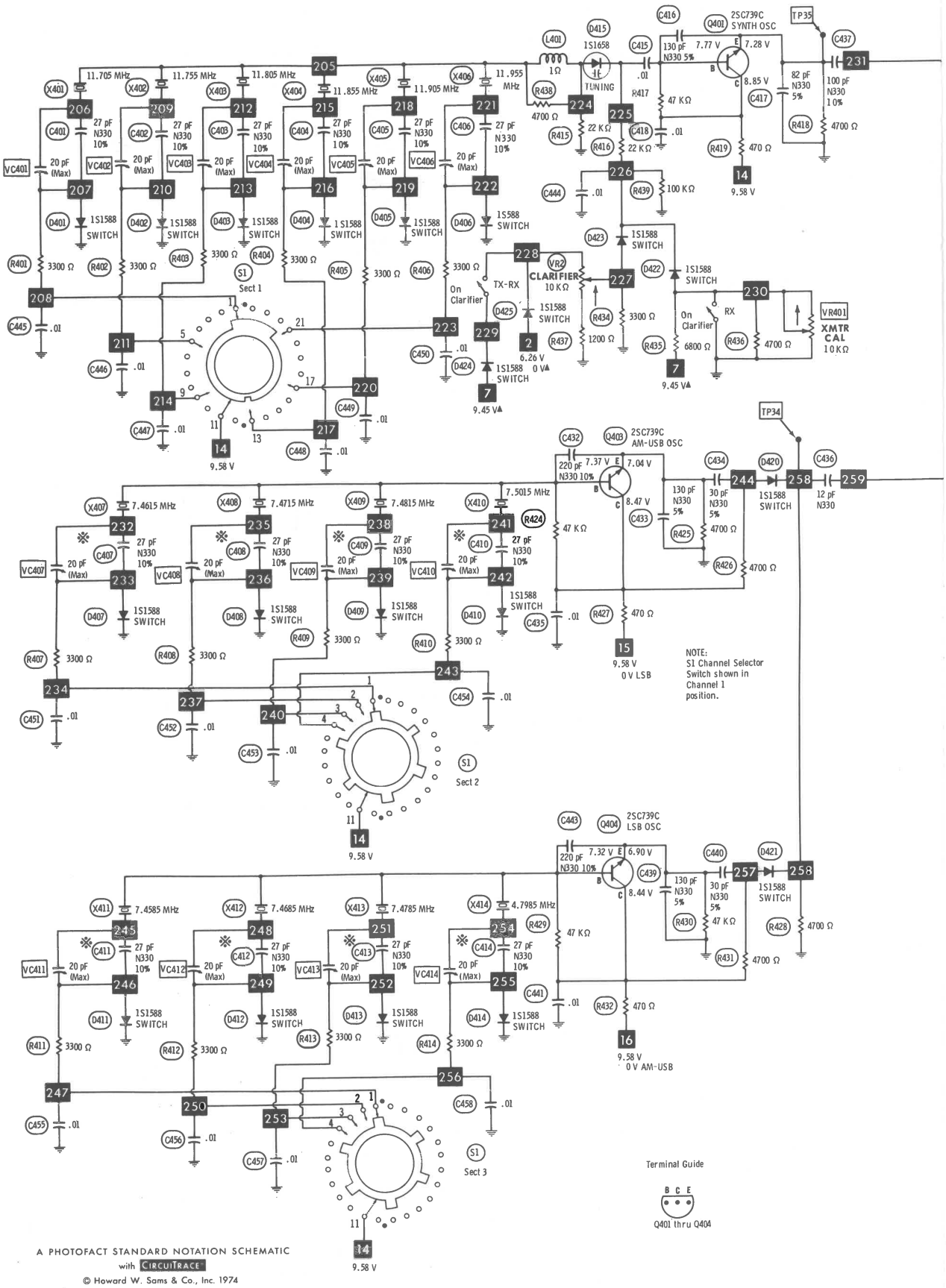

SEE NOTES ON PAGE 120

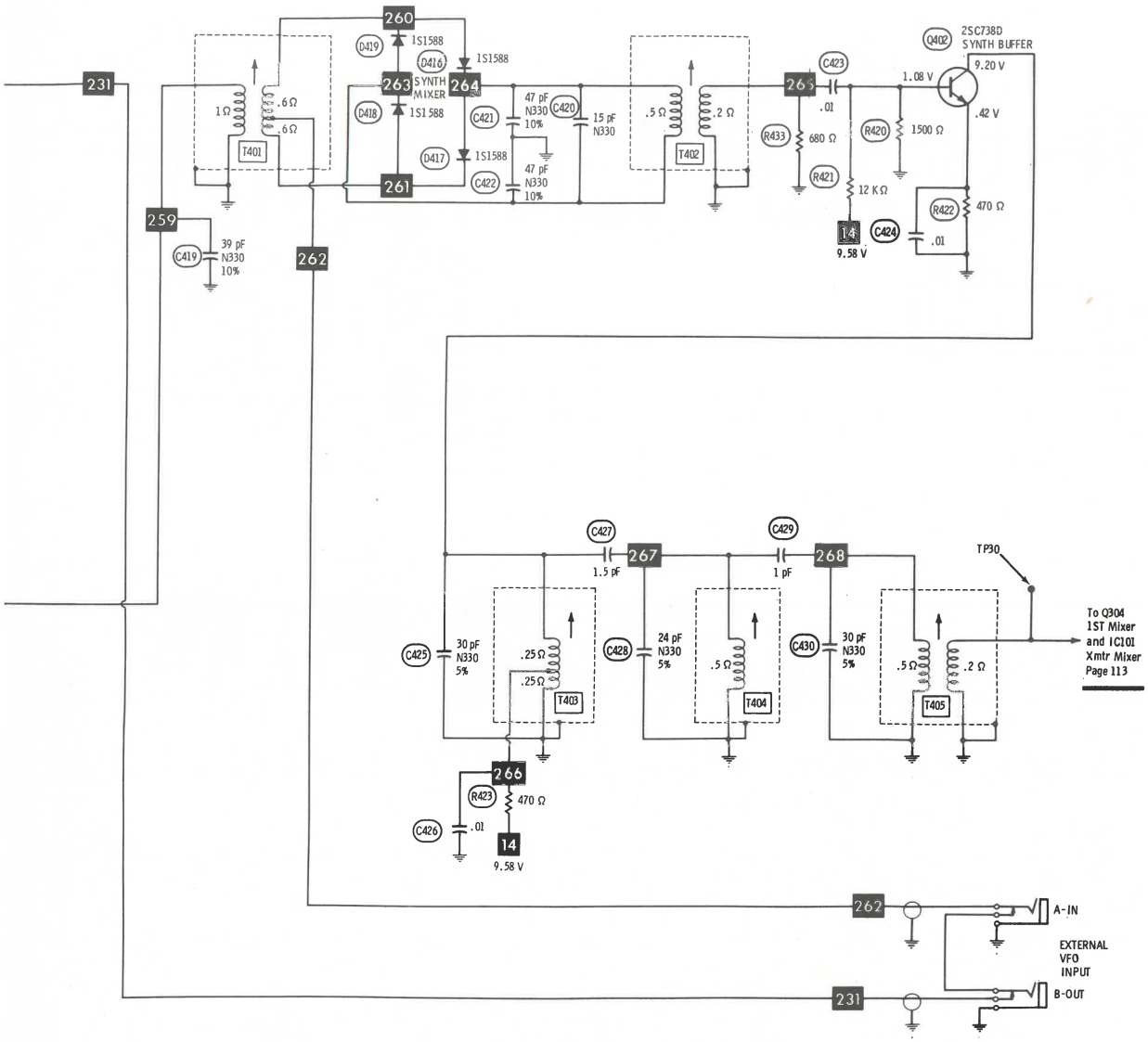

AM-USB

Chan	Crystal Complement	Chan	Crystal Complement	Chan	Crystal Complement	Chan	Crystal Complement
1	X401, X407	7	X402, X409	13	X404, X407	19	X405, X409
2	X401, X408	8	X402, X410	14	X404, X408	20	X405, X410
3	X401, X409	9	X403, X407	15	X404, X409	21	X406, X407
4	X401, X410	10	X403, X408	16	X404, X410	22	X406, X408
5	X402, X407	11	X403, X409	17	X405, X407	23	X406, X410
6	X402, X408	12	X403, X410	18	X405, X408		

LSB

Chan	Crystal Complement	Chan	Crystal Complement	Chan	Crystal Complement	Chan	Crystal Complement
1	X401, X411	7	X402, X413	13	X404, X411	19	X405, X413
2	X401, X412	8	X402, X414	14	X404, X412	20	X405, X414
3	X401, X413	9	X403, X411	15	X404, X413	21	X406, X411
4	X401, X414	10	X403, X412	16	X404, X414	22	X406, X412
5	X402, X411	11	X403, X413	17	X405, X411	23	X406, X414
6	X402, X412	12	X403, X414	18	X405, X412		

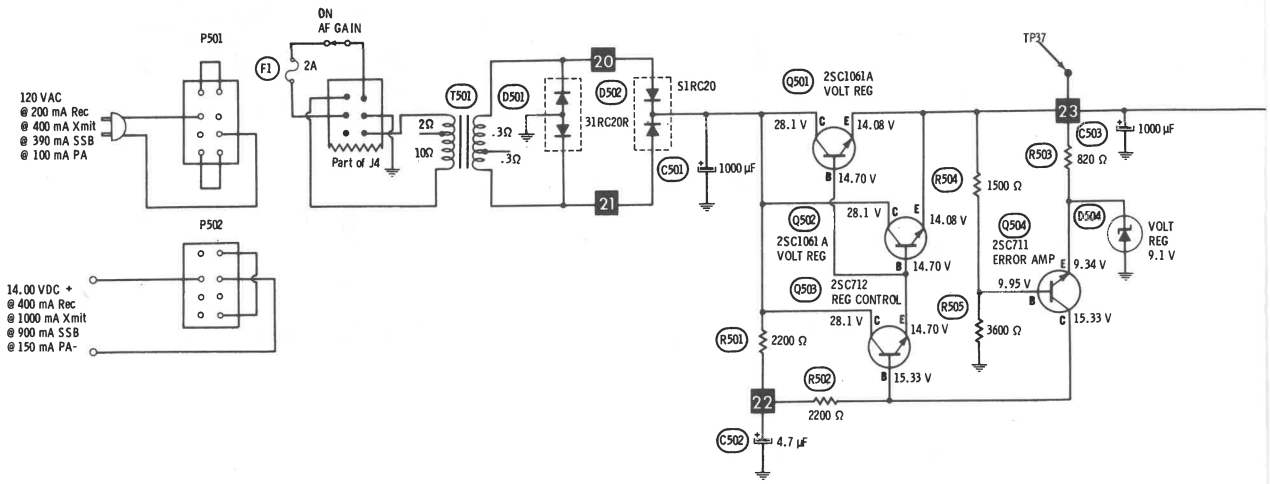

Terminal Guides

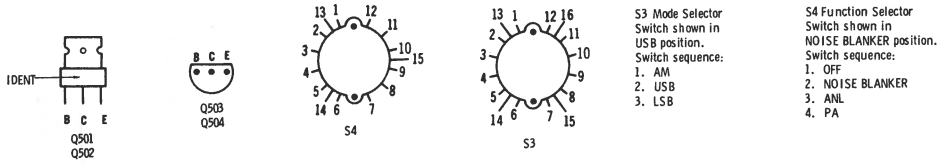

S3 Mode Selector Switch shown in USB position. Switch sequence:
1. AM
2. USB
3. LSB

S4 Function Selector Switch shown in NOISE BLANKER position. Switch sequence:
1. OFF
2. NOISE BLANKER
3. ANL
4. PA

† Measured in SSB

■ Measured with Noise Blanker On.

▲▲ Measured in transmit with 100% Modulation

Denotes chassis.
Denotes ground. (Voltage reference unless otherwise indicated)
Indicates connection used in some versions.
Indicates connection not used in some versions.
* Omitted in some versions.
⊖ See parts list.
※ Value varies; replace with original value.
▲ Measured in transmit position.
● Measured with unit squelched.
NC No Connection.
Measurements taken with switching in position shown unless otherwise indicated.
Values shown in ( ) are used in some applications.
Resistors are 1/2W or less, 5%, unless otherwise indicated.
Supply voltage maintained at rated value for measurements.
Voltage and resistance measured with VTVM or equivalent meter, no signal applied and controls adjusted for normal operation.
Arrow on control indicates direction of advance.
Numbers assigned to terminals may not be found on the unit.
Transistor resistances vary widely; no resistance measurements taken.

A PHOTOFACT STANDARD NOTATION SCHEMATIC
with CIRCUITRACE™

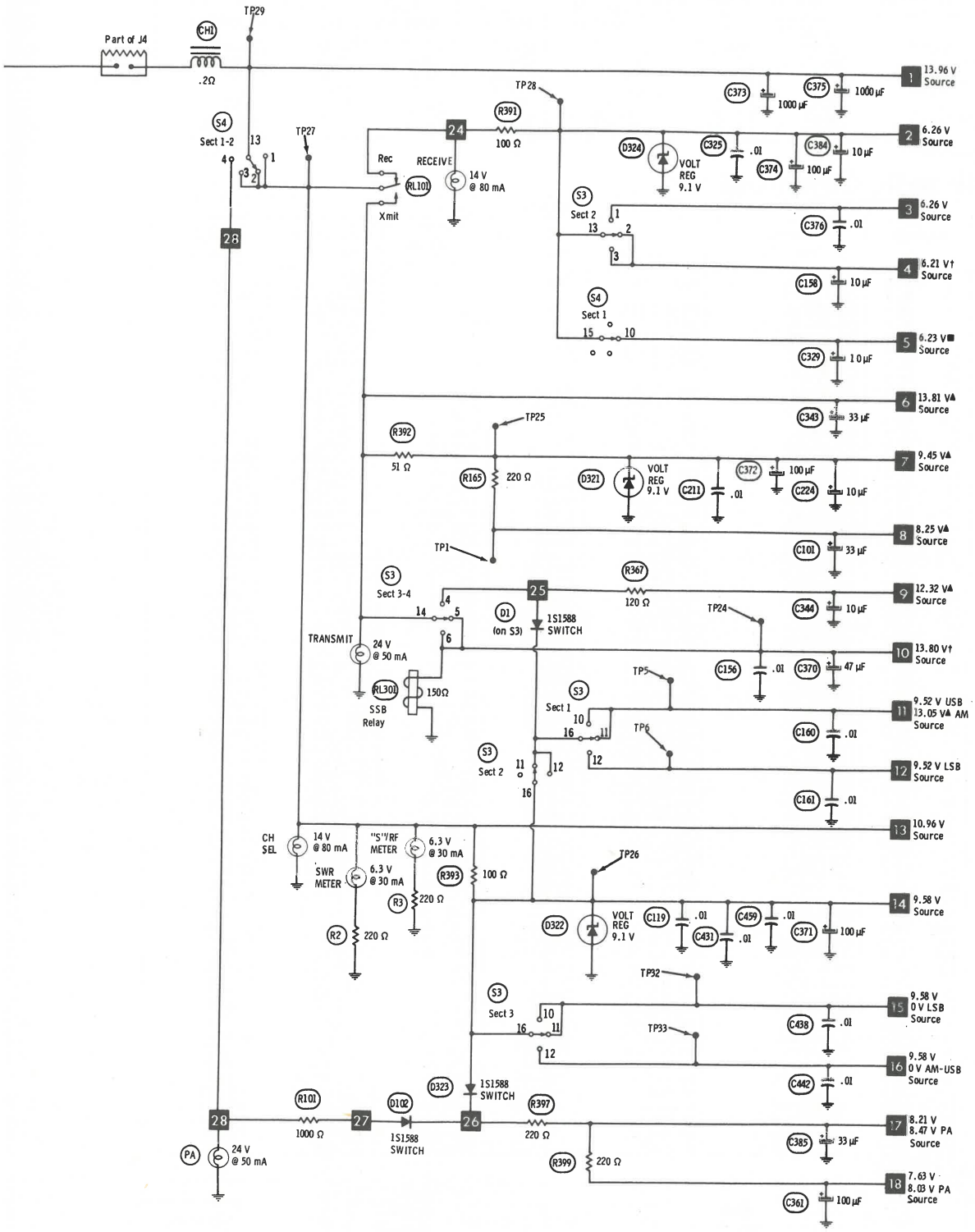

ROBYN MODEL SS-747B

PARTS LIST AND DESCRIPTION (CONTINUED)

(When ordering parts, state Model, Part Number, and Description.)

SEMICONDUCTORS (cont)

ITEM No.	TYPE / MFGR. No./PART No.	REPLACEMENT DATA						
		GENERAL ELECTRIC PART No.	INTERNATIONAL RECTIFIER PART No.	MALLORY PART No.	MOTOROLA PART No.	RCA PART No.	SPRAGUE PART No.	SYLVANIA PART No.
Q403	2SC739C	GE-11	TR-33	PTC132	HEP50	SK3018	RT108	ECG 107
Q404	2SC739C	GE-11	TR-33	PTC132	HEP50	SK3018	RT108	ECG 107
Q501	2SC1061A	GE-28	IRTR-76	PTC110	HEPS5003	SK3041	RT154	ECG 152
Q502	2SC1061A	GE-28	IRTR-76	PTC110	HEPS5003	SK3041	RT154	ECG 152
Q503	2SC712	GE-62	TR-21	PTC139	HEP50	SK3124	RT102	ECG 123A
Q504	2SC711	GE-62	TR-21	PTC139	HEP733	SK3018	RT102	ECG 123A
Q601	2SC710	GE-20	TR-21	PTC121	HEP56	SK3018	RT102	ECG 123A

(2) Two required.
(8) Varactor

ELECTROLYTIC CAPACITORS

ITEM No.	RATING	REPLACEMENT DATA					
		MFGR. PART No.	ARCO PART No.	CENTRALAB PART No.	CORNELL-DUBILIER PART No.	MALLORY PART No.	SPRAGUE PART No.
C101	33 10 V	ECE-A10V33L	ME-3-D-035	EP15-25	PC30-25	VTT33A10	EV-1125
C102	.47 35 V	CS15E1VR47M				TDC474M050EL	SD50-R479
C104	10 16 V	ECE-A16V10L	RME-B-E-010	EP15-10	PC10-25	VTT10A25	EV-1222
C105	1 50 V	ECE-A50V1L	RME-A-J-001	EP50-2	PC1-50	MTV1CB50	EV-1615
C106	10 16 V	ECE-A16V10L	RME-B-E-010	EP15-10	PC10-25	VTT10A25	EV-1222
C108	10 16 V	ECE-A16V10L	RME-B-E-010	EP15-10	PC10-25	VTT10A25	EV-1222
C109	10 16 V	ECE-A16V10L	RME-B-E-010	EP15-10	PC10-25	VTT10A25	EV-1222
C110	.47 35 V	CS15E1VR47M				TDC474M050EL	SD50-R479
C151	1 50 V	ECE-A50V1L	RME-A-J-001	EP50-2	PC1-50	MTV1CB50	EV-1615
C152	3.3 25 V	ECE-A25V3R3	RME-A-H-003	EP30-5	WBR5-50	VTT3R3A50	EV-1618
C153	3.3 25 V	ECE-A25V3R3	RME-A-H-003	EP30-5	WBR5-50	VTT3R3A50	EV-1618
C158	10 16 V	ECE-A16V10L	RME-B-E-010	EP15-10	PC10-25	VTT10A25	EV-1222
C165	33 10 V	ECE-A10V33L	ME-3-D-035	EP15-25	PC30-25	VTT33A10	EV-1125
C166	.47 35 V	CS15E1VR47M				TDC474M050EL	SD50-R479
C167	4.7 25 V	ECE-A25V4R7	RME-A-G-005	EP30-5	PC5-50	VTT4R7A50	EV-1319
C168	10 16 V	ECE-A16V10L	RME-B-E-010	EP15-10	PC10-25	VTT10A25	EV-1222
C169	4.7 25 V	ECE-A25V4R7	RME-A-G-005	EP30-5	PC5-50	VTT4R7A50	EV-1319
C170	1 50 V	ECE-A50V1L	RME-A-J-001	EP50-2	PC1-50	MTV1CB50	EV-1615
C174	10 16 V	ECE-A16V10L	RME-B-E-010	EP15-10	PC10-25	VTT10A25	EV-1222
C207	100 6.3 V	ECE-A6V100L	RME-E-B-100	EP6-100	PC100-10	MTV100CB6	EV-1030
C221	3.3 25 V	ECE-A25V3R3	RME-A-H-003	EP30-5	WBR5-50	VTT3R3A50	EV-1618
C224	10 16 V	ECE-A16V10L	RME-B-E-010	EP15-10	PC10-25	VTT10A25	EV-1222
C226	10 16 V	ECE-A16V10L	RME-B-E-010	EP15-10	PC10-25	VTT10A25	EV-1222
C310	3.3 25 V	ECE-A25V3R3	RME-A-H-003	EP30-5	WBR5-50	VTT3R3A50	EV-1618
C323	33 16 V		ME-3-E-035	EA15-25	WBR35-50	MTA30D15	EV-1325
C328	10 16 V	ECE-A16V10L	RME-B-E-010	EP15-10	PC10-25	VTT10A25	EV-1222
C329	10 16 V	ECE-A16V10L	RME-B-E-010	EP15-10	PC10-25	VTT10A25	EV-1222
C330	1 50 V	ECE-A50V1L	RME-A-J-001	EP50-2	PC1-50	MTV1CB50	EV-1615
C332	4.7 25 V	ECE-A25V4R7L	RME-A-G-005	EP30-5	PC5-50	VTT4R7A50	EV-1319
C340	1 50 V	ECE-A50V1L	RME-A-J-001	EP50-2	PC1-50	MTV1CB50	EV-1615
C343	33 16 V	ECE-A16V33L	ME-3-E-035	EA15-25	WBR35-50	MTA30D15	EV-1325
C344	10 16 V	ECE-A10V10L	RME-B-E-010	EP15-10	PC10-25	VTT10A25	EV-1222
C345	10 16 V	ECE-A10V10L	RME-B-E-010	EP15-10	PC10-25	VTT10A25	EV-1222
C352	1 50 V	ECE-A50V1L	RME-A-J-001	EP50-2	PC1-50	MTV1CB50	EV-1615
C357	1 50 V	ECE-A50V1L	RME-A-J-001	EP50-2	PC1-50	MTV1CB50	EV-1615
C358	1 50 V	ECE-A50V1L	RME-A-J-001	EP50-2	PC1-50	MTV1CB50	EV-1615
C359	1 50 V	ECE-A50V1L	RME-A-J-001	EP50-2	PC1-50	MTV1CB50	EV-1615
C360	10 16 V	ECE-A16V10L	RME-B-E-010	EP15-10	PC10-25	VTT10A25	EV-1222
C361	100 10 V	ECE-A10V100L	RME-E-D-100	EP15-100	PC100-10	MTV100CB10	EV-1130
C362	10 16 V	ECE-A16V10L	RME-B-E-010	EP15-10	PC10-25	VTT10A25	EV-1222
C364	10 16 V	ECE-A16V10L	RME-B-E-010	EP15-10	PC10-25	VTT10A25	EV-1222
C365	1 50 V	ECE-A50V1L	RME-A-J-001	EP50-2	PC1-50	MTV1CB50	EV-1615
C366	33 10 V	ECE-A10V33L	ME-3-D-035	EP15-25	PC30-25	VTT33A10	EV-1125
C369	220 25 V	ECE-A25V220L	RME-K-G-250	EA30-250	PC250-25	MTV250DJ25	EV-1345
C370	47 16 V	ECE-A16V47L	RME-E-E-050	EP15-50	PC50-16	MTV50CB15	EV-1226
C371	100 10 V	ECE-A10V100L	RME-E-D-100	EP15-100	PC100-10	MTV100CB10	EV-1130
C372	100 10 V	ECE-A10V100L	RME-E-D-100	EP15-100	PC100-10	MTV100CB10	EV-1130
C373	1000 16 V	ECE-B16V1000L	ME-G1000	EA15-1000	WBR1000-16	TC1501B	TVA-1163
C374	100 16 V	ECE-A10V100L	RME-E-E-100	EP15-100	PC100-16	MTV100CD15	EV-1230
C375	1000 16 V	ECE-A16V1000L	RME-N-E-1000	EA15-1000	PC1000-16	TC1501B	EV-1260
C377	4.7 25 V	ECE-A25V4R7L	RME-A-G-005	EP30-5	PC5-50	VTT4R7A50	EV-1319
C378	10 16 V	ECE-A16V10L	RME-B-E-010	EP15-10	PC10-25	VTT10A25	EV-1222
C379	10 16 V	ECE-A16V10L	RME-B-E-010	EP15-10	PC10-25	VTT10A25	EV-1222
C380	4.7 25 V	ECE-A25V4R7L	RME-A-G-005	EP30-5	PC5-50	VTT4R7A50	EV-1319
C382	10 16 V	ECE-A16V10L	RME-B-E-010	EP15-10	PC10-25	VTT10A25	EV-1222
C383	100 10 V	ECE-A10V100L	RME-E-D-100	EP15-100	PC100-10	MTV100CB10	EV-1130
C384	10 16 V	ECE-A16V10L	RME-B-E-010	EP15-10	PC10-25	VTT10A25	EV-1222
C385	33 10 V	ECE-A10V33L	ME-3-D-035	EP15-25	PC30-25	VTT33A10	EV-1125
C386	100 10 V	ECE-A10V100L	RME-E-D-100	EP15-100	PC100-10	MTV100CB10	EV-1130
C389	470 25 V		ME-G500	EA30-500	WBR500-25	TC2505C	TVA-1209
	(1000 25 V	ECE-B25V1000L)	ME-G1000	EA30-1000	WBR1000-25	MTA1000G25	TVA-1211
C501	1000 35 V	ECE-B35V1000L	ME-J1000	EA50-1000	WBR1000-35	TC50100C	TVA-1316
C502	4.7 25 V	ECE-A25V4R7L	RME-B-E-010	EP15-10	PC10-25	VTT10A25	EV-1222
C503	1000 16 V	ECE-B-16V1000L	ME-G1000	EA15-1000	WBR1000-16	TC1501B	TVA-1163

CAPACITORS

ITEM No.	RATING	MFGR. PART No.	REPLACEMENT DATA				
			ARCO/ELMENCO PART No.	CENTRALAB PART No.	CORNELL-DUBILIER PART No.	MALLORY PART No.	SPRAGUE PART No.
C1	.022		1DP-1-223		DPMS6S22	EWF1A122	225P22391WD3
C2	.022		1DP-1-223		DPMS6S22	EWF1A122	225P22391WD3
C103	.001		CCD-102	DD-102	GP1000	SM210	2SS-D10
C107	.015		1DP-1-153	DD-153	DPMS6S15	EWF1A115	225P15391WD3
C111	.047		CCD-503	CK-503	MGP05	TA150	TG-S50
C112	39 N330 5%	ECC-D1H390JS	*			*	10TCS-Q39
C113	39 N330 5%	ECC-D1H390JS	*			*	10TCS-Q39
C114	39 N330 5%	ECC-D1H390JS	*			*	10TCS-Q39
C115	220 N330 5%	ECC-D1H221JS	*			*	10TCS-T22
C116	130 N330 5%	ECC-D1H131JS	*			*	
C117	.01		CCD-103	CK-103	MGP01	TA110	TG-S10
C118	.01		CCD-103	CK-103	MGP01	TA110	TG-S10
C119	.01		CCD-103	CK-103	MGP01	TA110	TG-S10

PARTS LIST AND DESCRIPTION (CONTINUED)

(When ordering parts, state Model, Part Number, and Description.)

CAPACITORS (cont)

ITEM No.	RATING			MFGR. PART No.	REPLACEMENT DATA				
					ARCO/ELMENCO PART No.	CENTRALAB PART No.	CORNELL-DUBILIER PART No.	MALLORY PART No.	SPRAGUE PART No.
C120	100	N330	5%	ECC-D1H101JS	*			*	10TCS-T10
C121	.01				CCD-103	CK-103	MGP01	TA110	TG-S10
C122	33	N330	5%	ECC-D1H330JS	*			*	10TCS-Q33
C123	.01				CCD-103	CK-103	MGP01	TA110	TG-S10
C124	.01				CCD-103	CK-103	MGP01	TA110	TG-S10
C125	.01				CCD-103	CK-103	MGP01	TA110	TG-S10
C126	.01				CCD-103	CK-103	MGP01	TA110	TG-S10
C127	.01				CCD-103	CK-103	MGP01	TA110	TG-S10
C128	.01				CCD-103	CK-103	MGP01	TA110	TG-S10
C129	.01				CCD-103	CK-103	MGP01	TA110	TG-S10
C130	.01				CCD-103	CK-103	MGP01	TA110	TG-S10
C131	.01				CCD-103	CK-103	MGP01	TA110	TG-S10
C132	15	N330		ECC-D1H150JS	*			*	10TCS-Q15
C133	68	N330	10%	ECC-D1H680JS	*			*	10TCS-Q68
C134	.01				CCD-103	CK-103	MGP01	TA110	TG-S10
C135	10	N330		ECC-D1H100JS	*			*	10TCS-Q10
C136	47	N330	10%	ECC-D1H470JS	*			*	10TCS-Q47
C137	.01				CCD-103	CK-103	MGP01	TA110	TG-S10
C138	6	N330		ECC-D1H060DS	*			*	
C139	.01				CCD-103	CK-103	MGP01	TA110	TG-S10
C140	.01				CCD-103	CK-103	MGP01	TA110	TG-S10
C141	30	N330	5%	ECC-D1H300JS	*			*	10TCS-Q30
C142	.01				CCD-103	CK-103	MGP01	TA110	TG-S10
C143	.01				CCD-103	CK-103	MGP01	TA110	TG-S10
C144	.01				CCD-103	CK-103	MGP01	TA110	TG-S10
C145	.01				CCD-103	CK-103	MGP01	TA110	TG-S10
C146	.01				CCD-103	CK-103	MGP01	TA110	TG-S10
C147	.01				CCD-103	CK-103	MGP01	TA110	TG-S10
C148	.01				CCD-103	CK-103	MGP01	TA110	TG-S10
C149	10	N330		ECC-D1H100JS	*			*	10TCS-Q10
C150	.01				CCD-103	CK-103	MGP01	TA110	TG-S10
C154	.047				CCD-503	CK-503	MGP05	TA150	TG-S50
C155	.0022				CCD-222	DD-222	GP2200	GP222	10TS-D22
C156	.01				CCD-103	CK-103	MGP01	TA110	TG-S10
C157	30	N330	5%	ECC-D1H300JS	*			*	10TCS-Q30
C159	.01				CCD-103	CK-103	MGP01	TA110	TG-S10
C160	.01				CCD-103	CK-103	MGP01	TA110	TG-S10
C161	.01				CCD-103	CK-103	MGP01	TA110	TG-S10
C162	3								10TCC-V30
C163	.1				1DP-2-104		DPMS2P1	EWF1A010	225P10491WD3
C164	.01				CCD-103	CK-103	MGP01	TA110	TG-S10
C171	.0047				CCD-472	DD-472G	GP4700	JF247	10TS-D47
C172	.01				CCD-103	CK-103	MGP01	TA110	TG-S10
C173	.01				CCD-103	CK-103	MGP01	TA110	TG-S10
C201	220	N330	5%	ECC-D1H221JS	*			*	10TCS-T22
C202	.047				CCD-503	CK-503	MGP05	TA150	TG-S50
C203	82	N150	5%	ECC-D1H121JS	*			*	10TCP-Q82
C204	.047				CCD-503	CK-503	MGP05	TA150	TG-S50
C205	.047				CCD-503	CK-503	MGP05	TA150	TG-S50
C206	.047				CCD-503	CK-503	MGP05	TA150	TG-S50
C208	30	N330	5%	ECC-D1H300JS	*			*	10TCS-Q30
C209	120	N330	5%	ECC-D1H121JS	*			*	10TCS-T12
C210	.047				CCD-503	CK-503	MGP05	TA150	TG-S50
C211	.01				CCD-103	CK-103	MGP01	TA110	TG-S10
C212	.047				CCD-503	CK-503	MGP05	TA150	TG-S50
C213	.01				CCD-103	CK-103	MGP01	TA110	TG-S10
C214	.01				CCD-103	CK-103	MGP01	TA110	TG-S10
C215	.01				CCD-103	CK-103	MGP01	TA110	TG-S10
C216	330		10%		CCD-331	DD-331	GP330	GP333	10TS-T33
C217	220	N330	5%	ECC-D1H221JS	*			*	10TCS-T22
C218	220	N330	10%	ECC-D1H221JS	*			*	10TCS-T22
C219	100	N330	10%		*			*	10TCS-T10
C220	4						NP03P9		10TCC-V39
C222	.01				CCD-103	CK-103	MGP01	TA110	TG-S10
C223	.1				1DP-2-104		DPMS2P1	EWF1A010	225P10491WD3
C225	.01				CCD-103	CK-103	MGP01	TA110	TG-S10
C227	.01				CCD-103	CK-103	MGP01	TA110	TG-S10
C228	.01				CCD-103	CK-103	MGP01	TA110	TG-S10
C229	100		10%		CCT0-101	DTZ-100	NP0100	CN0310	10TCC-T10
C301	.01				CCD-103	CK-103	MGP01	TA110	TG-S10
C305	.01				CCD-103	CK-103	MGP01	TA110	TG-S10
C306	.01				CCD-103	CK-103	MGP01	TA110	TG-S10
C307	82	N330	5%	ECC-D1H820JS	*			*	10TCS-Q82
C308	.01				CCD-103	CK-103	MGP01	TA110	TG-S10
C309	.01				CCD-103	CK-103	MGP01	TA110	TG-S10
C311	.01				CCD-103	CK-103	MGP01	TA110	TG-S10
C312	18	N330		ECC-D1H240JS	*			*	10TCS-Q18
C313	.01				CCD-103	CK-103	MGP01	TA110	TG-S10
C314	15	N330		ECC-D1H150JS	*			*	10TCS-Q15
C315	.01				CCD-103	CK-103	MGP01	TA110	TG-S10
C316	1	N330		ECC-D1H010D	*			*	
C317	20	N330		ECC-D1H200JS	*			*	10TCS-Q20
C318	.001				CCD-102	DD-102	GP1000	SM210	2SS-D10
C319	.001				CCD-102	DD-102	GP1000	SM210	2SS-D10
C320	30	N330	5%	ECC-D1H300JS	*			*	10TCS-Q30
C321	.01				CCD-103	CK-103	MGP01	TA110	TG-S10
C322	1	NPO						CN0510	10TCC-V10
C324	200	N330	5%		*			*	10TCS-T20
C325	.01				CCD-103	CK-103	MGP01	TA110	TG-S10
C326	2	N330		ECC-D1H020D	*			*	
C327	30	N330	5%	ECC-D1H300JS	*			*	10TCS-Q30
C331	100	N330	5%	ECC-D1H101JS	*			*	10TCS-T10
C333	30	N330	5%	ECC-D1H300JS	*			*	10TCS-Q30
C334	220	N330	5%	ECC-D1H221JS	*			*	10TCS-T22
C335	220	N330	5%-	ECC-D1H221JS	*			*	10TCS-T22
C336	47	N330	10%	ECC-D1H470JS	*			*	10TCS-Q47
C337	.01				CCD-103	CK-103	MGP01	TA110	TG-S10
C338	.022				1DP-1-223		DPMS6S22	EWF1A122	225P22391WD3
C339	82	N330	5%	ECC-D1H820JS	*			*	10TCS-Q82
C341	47	N330	10%	ECC-D1H470JS	*			*	10TCS-Q47
C342	.01				CCD-103	CK-103	MGP01	TA110	TG-S10

PARTS LIST AND DESCRIPTION (CONTINUED)

(When ordering parts, state Model, Part Number, and Description.)

CAPACITORS (cont)

ITEM No.	RATING			MFGR. PART No.	REPLACEMENT DATA				
					ARCO/ELMENCO PART No.	CENTRALAB PART No.	CORNELL-DUBILIER PART No.	MALLORY PART No.	SPRAGUE PART No.
C346	.047				CCD-503	CK-503	MGP05	TA150	TG-S50
C347	.047				CCD-503	CK-503	MGP05	TA150	TG-S50
C348	.01				CCD-103	CK-103	MGP01	TA110	TG-S10
C349	.047				CCD-503	CK-503	MGP05	TA150	TG-S50
C350	10	N330		ECC-D1H100JS	*			*	10TCS-Q10
C351	.047				CCD-503	CK-503	MGP05	TA150	TG-S50
C353	.022		10%		1DP-1-223		DPMS6S22	EWF1A122	225P22391WD3
C354	.047				CCD-503	CK-503	MGP05	TA150	TG-S50
C355	.01				CCD-103	CK-103	MGP01	TA110	TG-S10
C356	.01				CCD-103	CK-103	MGP01	TA110	TG-S10
C363	.047				CCD-503	CK-503	MGP05	TA150	TG-S50
C367	.022				1DP-1-223		DPMS6S22	EWF1A122	225P22391WD3
C368	.1				1DP-2-104		DPMS2P1	EWF1A010	225P10491WD3
C376	.01				CCD-103	CK-103	MGP01	TA110	TG-S10
C381	.1				1DP-2-104		DPMS2P1	EWF1A010	225P10491WD3
C387	.01				CCD-103	CK-103	MGP01	TA110	TG-S10
C388	.1				1DP-2-104		DPMS2P1	EWF1A010	225P10491WD3
C391	100		10%		CCT0-101	DTZ-100	NP0100	CN0310	10TCC-T10
C401	27	N330	10%	ECC-D1H270JS	*			*	10TCS-Q27
C402	27	N330	10%	ECC-D1H270JS	*			*	10TCS-Q27
C403	27	N330	10%	ECC-D1H270JS	*			*	10TCS-Q27
C404	27	N330	10%	ECC-D1H270JS	*			*	10TCS-Q27
C405	27	N330	10%	ECC-D1H270JS	*			*	10TCS-Q27
C406	27	N330	10%	ECC-D1H270JS	*			*	10TCS-Q27
C407	27	N330	10%	ECC-D1H270JS	*			*	10TCS-Q27
C408	27	N330	10%	ECC-D1H270JS	*			*	10TCS-Q27
C409	27	N330	10%	ECC-D1H270JS	*			*	10TCS-Q27
C410	27	N330	10%	ECC-D1H270JS	*			*	10TCS-Q27
C411	27	N330	10%	ECC-D1H270JS	*			*	10TCS-Q27
C412	27	N330	10%	ECC-D1H270JS	*			*	10TCS-Q27
C413	27	N330	10%	ECC-D1H270JS	*			*	10TCS-Q27
C414	27	N330	10%	ECC-D1H270JS	*			*	10TCS-Q27
C415	.01				CCD-103	CK-103	MGP01	TA110	TG-S10
C416	130	N330	5%	ECC-D1H131JS	*			*	
C417	82	N330	5%	ECC-D1H820JS	*			*	10TCS-Q82
C418	.01				CCD-103	CK-103	MGP01	TA110	TG-S10
C419	39	N330	10%	ECC-D1H390JS	*			*	10TCS-Q39
C420	15	N330		ECC-D1H150JS	*			*	10TCS-Q15
C421	47	N330	10%	ECC-D1H470JS	*			*	10TCS-Q47
C422	47	N330	10%	ECC-D1H470JS	*			*	10TCS-Q47
C423	.01				CCD-103	CK-103	MGP01	TA110	TG-S10
C424	.01				CCD-103	CK-103	MGP01	TA110	TG-S10
C425	30	N330	5%	ECC-D1H300JS	*			*	10TCS-Q30
C426	.01				CCD-103	CK-103	MGP01	TA110	TG-S10
C427	1.5					DTZ-1R5	NP01P5	CN0515	10TCC-V15
C428	24	N330	5%	ECC-D1H240JS	*			*	
C429	1							CN0510	10TCC-V10
C430	30	N330	5%	ECC-D1H300JS	*			*	10TCS-Q30
C431	.01				CCD-103	CK-103	MGP01	TA110	TG-S10
C432	220	N330	10%	ECC-D1H221JS	*			*	10TCS-T22
C433	130	N330	5%	ECC-D1H131JS	*			*	
C434	300	N330	5%	ECC-D1H300JS	*			*	10TCS-T30
C435	.01				CCD-103	CK-103	MGP01	TA110	TG-S10
C436	12	N330		ECC-D1H120JS	*			*	10TCS-Q12
C437	100	N330	10%	ECC-D1H101JS	*			*	10TCS-T10
C438	.01				CCD-103	CK-103	MGP01	TA110	TG-S10
C439	130	N330	5%	ECC-D1H131JS	*			*	
C440	30	N330	5%	ECC-D1H300JS	*			*	10TCS-Q30
C441	.01				CCD-103	CK-103	MGP01	TA110	TG-S10
C442	.01				CCD-103	CK-103	MGP01	TA110	TG-S10
C443	220	N330	10%	ECC-D1H221JS	*			*	10TCS-T22
C444	.01				CCD-103	CK-103	MGP01	TA110	TG-S10
C445	.01				CCD-103	CK-103	MGP01	TA110	TG-S10
C446	.01				CCD-103	CK-103	MGP01	TA110	TG-S10
C447	.01				CCD-103	CK-103	MGP01	TA110	TG-S10
C448	.01				CCD-103	CK-103	MGP01	TA110	TG-S10
C449	.01				CCD-103	CK-103	MGP01	TA110	TG-S10
C450	.01				CCD-103	CK-103	MGP01	TA110	TG-S10
C451	.01				CCD-103	CK-103	MGP01	TA110	TG-S10
C452	.01				CCD-103	CK-103	MGP01	TA110	TG-S10
C453	.01				CCD-103	CK-103	MGP01	TA110	TG-S10
C454	.01				CCD-103	CK-103	MGP01	TA110	TG-S10
C455	.01				CCD-103	CK-103	MGP01	TA110	TG-S10
C456	.01				CCD-103	CK-103	MGP01	TA110	TG-S10
C457	.01				CCD-103	CK-103	MGP01	TA110	TG-S10
C458	.01				CCD-103	CK-103	MGP01	TA110	TG-S10
C459	.01				CCD-103	CK-103	MGP01	TA110	TG-S10
C601	.1				1DP-2-104		DPMS2P1	EWF1A010	225P10491WD3
C604	.001				6DP-1-102	CPR-1000J	DPMS6D1	EWF1A210	225P10291WD3
C605	10				CCT0-100	DTZ-10	NP010	CN0410	10TCC-Q10
VC101	3-20			EVC-1ZW20P32					
VC102	3-20			EVC-1ZW20P32					
VC103	3-20			EVC-1ZW20P32					
VC201	3-10			EVC-1ZW10P32					
VC301	3-20			ECV-1ZW20P12					
VC401	3-20			EVC-1ZW20P12					
VC402	3-20			EVC-1ZW20P12					
VC403	3-20			EVC-1ZW20P12					
VC404	3-20			EVC-1ZW20P12					
VC405	3-20			EVC-1ZW20P12					
VC406	3-20			EVC-1ZW20P12					
VC407	3-20			EVC-1ZW20P12					
VC408	3-20			EVC-1ZW20P12					
VC409	3-20			EVC-1ZW20P12					
VC410	3-20			EVC-1ZW20P12					
VC411	3-20			EVC-1ZW20P12					
VC412	3-20			EVC-1ZW20P12					
VC413	3-20			EVC-1ZW20P12					
VC414	3-20			EVC-1ZW20P12					

* Not normally in distributor's stock. Available thru distributor on order to manufacturer.

PARTS LIST AND DESCRIPTION (CONTINUED)

(When ordering parts, state Model, Part Number, and Description.)

CONTROLS (All wattages 1/2 watt, or less, unless listed)

ITEM No.	FUNCTION	RESIST-ANCE	REPLACEMENT DATA				
			MFGR. PART No.	CENTRALAB PART No.	CLAROSTAT PART No.	CTS—IRC PART No.	MALLORY PART No.
VR1	SWR CAL	10K		F1-10K (1), SSK012	A47-10K-S (1), KSS-3 or [NP-10K-S(1), UPC-10K-S(1), UP-C-400]	BU1(1),CF9,SS6A	RU14L,SL36,SL3250 or [UA14L(1),SN750 or U20
VR2	Clarifier/Push-Pull Switch (TXRX-RX)	10K				BU1(1),CF9,SS10, K (9)	
VR3	Volume/Power Switch	10K		F2-10K(1), SSK012,KR-1	A47-10K-W(1), KSS-3,SWE-12 or [NP-10K-Z(1), UP-C-400,NWE-12]	BU1(1),CF61,SS6A, GC	RU14A,SL36,SL3250, US41 or [UA14A(1), SN750,US41] or [U18(1),US26]
VR4	Squelch	5000		F-5000(1), SSK012	A47-5000-S(1), KSS-3 or NP-5000-S(1), UP-C-400	BU1(1),CF8,SS6A	RU53L,SL36,SL3250 or UA53L(1),SN750 or U14(1)
VR5	RF Gain	1000		F1-1000(1), SSK012	A47-1000-S(1), KSS-3 or NP-1000-S(1), UP-C-400	BU1(1),CF6,SS6A	RU13L,SL36,SL3250 or UA13L(1),SN750 or U4 (1)
VR101	Carrier Balance	100					
VR102	Meter	50K		TSV-50K (2) or T-50K (2)	C-503 (2)	X201R503B (2)	MTC54L1 (2)
VR103	ALC	50K		TSV-50K or T-50K	C-503	X201R503B	MTC54L1
VR201	Bias	100		TSV-100 (2) or T-100 (2)		X201R101B (2)	MTC12L1 (2)
VR301	SSB AGC	50K		TSV-50K (2) or T-50K (2)	C-503 (2)	X201R503B (2)	MTC54L1 (2)
VR302	AGC	50K		TSV-50K (2) or T-50K (2)	C-503 (2)	X201R503B (2)	MTC54L1 (2)
VR303	Squelch Range	50K		TSV-50K (2) or T-50K (2)	C-503 (2)	X201R503B (2)	MTC54L1 (2)
VR304	Squelch Threshold	50K		TSV-50K (2) or T-50K (2)	C-503 (2)	X201R503B (2)	MTC54L1 (2)
VR401	Xmtr. Calibration	10K		TSV-10K (2) or T-10K (2)	C-103 (2)	X201R103B (2)	MTC14L1 (2)
VR601	Bias	50K		TSV-50K or T-50K	C-503	X201R503B	MTC54L1

(1) Enlarge mounting hole.
(2) Cut off one of the end terminals and bend to fit PC board.
(9) Switch must be CTS type 080.

RESISTORS (Power and Special)

ITEM No.	RATING	REPLACEMENT DATA	
		WORKMAN PART No.	MFGR. PART No.
R1	8.2 1W 5%		ERC-8.2J
R208	2.2 1/2W 5%		ERD-14V2.2J
R301	.22 1/4W 5%		
R302	.22 1/4W 5%		

ITEM No.	RATING	REPLACEMENT DATA	
		WORKMAN PART No.	MFGR. PART No.
R303	.22 1/4W 5%		
R304	.22 1/4W 5%		
TH301	250 (Cold)		D-2B

COILS (RF-IF)

ITEM No.	USE	REPLACEMENT DATA			
		PART No.	MEISSNER PART No.	MILLER PART No.	REMARKS
CH301	Peaking (100 mH)	LT-N-100			
L101	Peaking (47 uH)	LT-B47	19-7047	74F475AI	
L102	Peaking (47 uH)	LT-B47	19-7047	74F475AI	
L103	Peaking (47 uH)	LT-B47	19-7047	74F475AI	
L201	RF Choke (3 uH)	HH-87-F		5218	
L202	Driver Output	HH-87-B			
L203	RF Choke (3 uH)	HH-87-F		5218	
L204	RF Choke (.65 uH)	HH-87-G	19-2006	4590	
L205	Ant Loading	HH-87-C			
L206	Ant Loading	HH-87-D			
L207	Ant Loading	HH-87-E			
L208	Ant Loading	HH-87-E			
L209	RF Choke (.85 uH)	HH-87-H	19-2008	4594	
L401	RF Choke (6.6 uH)	HH-87-J		74F686AP	
T101	7.8 MHz IF	HH-74-K			
T102	7.8 MHz IF	HH-74-L			
T103	7.8 MHz Mixer Input	HH-74-Q			
T104	27 MHz Mixer Output	HH-74-R			
T201	27 MHz Driver Input	HH-74-Y			
T302	7.8 MHz IF	HH-74-P			
T303	27 MHz RF Input	HH-74-S_1			
T304	27 MHz Mixer Input	HH-74-E_1			
T305	27 MHz Mixer Input	HH-74-F_1			
T306	19 MHz Mixer Output	HH-74-G_2			
T307	19 MHz Mixer Output	HH-74-W			
T308	19 MHz Mixer Input	HH-74-X			
T309	7 MHz Rec Osc	HH-74-J			
T310	Input IF	HH-74-B	16-9027	8517	
T311	Output IF	HH-74-A	16-9027	8517	
T401	Synth Mixer Input	HH-74-N			
T402	Synth Mixer Output	HH-74-O			
T403	Synth Output	HH-74-T			
T404	Synth Output	HH-74-U			
T405	Synth Output	HH-74-V			

PARTS LIST AND DESCRIPTION (CONTINUED)

(When ordering parts, state Model, Part Number, and Description.)

FILTER CHOKE

ITEM No.	RATINGS			REPLACEMENT DATA				NOTES
	CURRENT (Measured)	DC RES.	INDUCTANCE (0 CURRENT 1000~)	MFGR. PART No.	STANCOR PART No.	THORDARSON PART No.	TRIAD PART No.	
CH1	1000 mA	.2	1.2 mH	HA-10-C				

CHOKE (Audio Output)

ITEM No.	INDUCTANCE	REPLACEMENT DATA				NOTES
		MFGR. PART No.	STANCOR PART No.	THORDARSON PART No.	TRIAD PART No.	
CH302	1.2 mH	HA-10-B				

TRANSFORMER (Driver)

ITEM No.	TURNS RATIO			REPLACEMENT DATA				NOTES
	PRI.	SEC. 1	SEC. 2	MFGR. PART No.	STANCOR PART No.	THORDARSON PART No.	TRIAD Part No.	
T312	2	1		HA-03-A				

TRANSFORMER (Audio Output)

ITEM No.	IMPEDANCE		REPLACEMENT DATA				NOTES
	PRI.	SEC.	MFGR. PART No.	STANCOR PART No.	THORDARSON PART No.	TRIAD PART No.	
T313	92	8	HA-03-J				

TRANSFORMER (Power)

ITEM No.	RATING		REPLACEMENT DATA				NOTES
	PRI.	SEC. 1	MFGR. PART No.	STANCOR PART No.	THORDARSON PART No.	TRIAD PART No.	
T501	120 VAC @ 400 mA	22 VAC @ 1900 mA	HT-21-A				

SPEAKER

ITEM No.	TYPE	REPLACEMENT DATA		NOTES
		MFGR. PART No.	QUAM PART No.	
SP1	2" x 4" PM 8 ohms	P-103-03		

FUSE DEVICES

ITEM No.	DESCRIPTION	REPLACEMENT DATA						
		PART No.		BUSS PART No.		LITTELFUSE PART No.		WORKMAN PART No.
		DEVICE	HOLDER	DEVICE	HOLDER	DEVICE	HOLDER	DEVICE
F1	2A 250 V Fast Acting			AGC 2	HKP	312002	342013AL	FG2-2

MISCELLANEOUS

ITEM No.	PART NAME	PART No.	NOTES
CF101	Crystal Filter	HF-02G	7.8 MHz
CF301	Ceramic Filter	CFU455G	455 kHz
CF302	Ceramic Filter	CFU455G	455 kHz
M1	Meter	HM-03-O	"S"/RF, 500 uA
M2	Meter	HM-03-E	SWR, 500 uA
RL101	Relay	HC-4DC12V	Transmit/Receive
RL301	Relay	HC-4DC12V	Transmit/Receive
S1	Switch	HS-09-5	Channel Selector
S2	Switch	53M1YAMA	Forward/Reflected
S3	Switch	HS-05-C	AM/USB/LSB
S4	Switch	HS-05-D	Off/NB/ANL/PA
X101	Crystal	HQ-30S	7.7985 MHz
X102	Crystal	HQ-30T	7.8015 MHz
X301	Crystal	HQ-30-AM	7.3435 MHz
X401	Crystal	HQ-30-A	11.705 MHz
X402	Crystal	HQ-30-B	11.755 MHz
X403	Crystal	HQ-30-C	11.805 MHz
X404	Crystal	HQ-30-D	11.855 MHz
X405	Crystal	HQ-30-E	11.905 MHz
X406	Crystal	HQ-30-F	11.955 MHz
X407	Crystal	HQ-30-G	7.4615 MHz
X408	Crystal	HQ-30-H	7.4715 MHz
X409	Crystal	HQ-30-J	7.4815 MHz
X410	Crystal	HQ-30-K	7.5015 MHz
X411	Crystal	HQ-30-L	7.4585 MHz
X412	Crystal	HQ-30-M	7.4685 MHz
X413	Crystal	HQ-30-P	7.4785 MHz
X414	Crystal	HQ-30-R	7.4985 MHz

WIRING DATA

General-use Hook-up Wire ..... Use BELDEN No. 8530 (Solid) Available in 12 Colors
8524 (Stranded) Available in 12 Colors

Shielded Antenna Lead ..... Use BELDEN No. 8214 Lowest-loss (RG-8/U Type)
8237 Low-loss (RG-8/U)
8240 (Solid) Miniature (RG-58/U)
8259 (Stranded) Miniature (RG-58A/U)

Coiled Microphone Cable ..... Use BELDEN No. 8497 3-Conductor,1 Shielded,for Press-to-Talk (Neoprene)
8496 3-Conductor,1 Shielded,for Press-to-Talk (Vinyl)

Ignition Noise Suppression ..... Use BELDEN No. 7300-Series Spark-Plug Sets

Bonding Strap ..... Use BELDEN No. 8661 (3/8 In.)

For Supplier Address See PHOTOFACT Index

NOTE

ONLY THOSE PERSONS PROPERLY LICENSED ARE PERMITTED TO MAKE REPAIRS OR ADJUSTMENTS WHICH MAY RESULT IN ILLEGAL OPERATION. (REFER TO FCC RULES AND REGULATIONS PART 95, SUBPARTS C & D.)

The frequency of the transmitter should be checked periodically with a secondary frequency standard to insure proper and legal operation.

Best results will be obtained when adjusting the final RF output circuit if the antenna normally used is connected and the chassis is as nearly in the cabinet as possible.

Connect either 50-ohm dummy load or the normally used antenna system.

MODEL HB-625A (99-32468W)

ALIGNMENT INSTRUCTIONS

Suggested Alignment Tools:	GC ELECTRONICS
L1 thru L11, L14, L17, L21	9440
L13, L18, L19, L20, L22, L23, MF	9087

OSC ALIGNMENT

INDICATOR	ADJUST	REMARKS
VTVM (DC)	L1	Connect between emitter and ground of TR1. Adjust for maximum.
VTVM (DC)	L2	Connect between emitter and ground of T2. Adjust for maximum.
VTVM (AC)	L20	Sig generator to 27.115 MHz (30%,Mod.,1kHz) Delta switch to center position. Adjust for maximum output. Detune 1/8 turn CW from peak.

HOWARD W. SAMS & CO., INC. Indianapolis, Indiana 46206

RECEIVER ALIGNMENT

Connect an AC VTVM across speaker voice coil. Set squelch fully CCW, Delta tuning switch to center position. Adjust volume control to obtain a suitable meter reading.

SIGNAL GENERATOR	CHANNEL	ADJUST	REMARKS
Connect high side thru .01 mfd to anode of D2. Low side to ground. 455 kHz (Mod.)	Any	MF L21,L22, L23	Adjust for maximum.
Connect high side thru .01 mfd to ant. jack. Low side to chassis. 27.085 MHz (Mod.)	11	L3,L4,L5, L15,L16, L17,L18, L19	Adjust for maximum.
Connect high side thru .01 mfd to ant. jack. Low side to chassis. 27.085 MHz (Mod.) 10 mV.	11	VR3	Set squelch fully CW. Adjust until squelch just opens.
Connect high side thru .01 mfd to ant. jack. Low side to chassis. 26.965 MHz (Unmod.)	1	L24	VTVM neg to output side of D12, ground lead to board ground. Increase signal until a negative DC reading is obtained. Adjust for MINIMUM reading.
Set generator to 25.0 MHz	1	VC3 L25,L26, L27	Adjust for maximum negative DC reading.
Connect a square wave generator to ant. jack. 50 Hz 100 mV.	1	L25,L26, L27,VC2	Connect scope between output of D12 and ground. Adjust for maximum pulse.
Same as above except reduced output.	1	VC3 L24	Reduce generator output until pulses are just visible. Adjust for MINIMUM noise.
Connect high side thru .01 mfd to ant. jack. Low side to chassis. 27.085 MHz (Mod.) 100 mV	11	VR6	Adjust to S-9 on "S" meter.

TRANSMITTER ALIGNMENT

INDICATOR	ADJUST	REMARKS
RF Wattmeter between antenna and dummy load.	L6,L7,L8, L9,L10, L11	Set to channel 13, key transmitter. Adjust for maximum.
As above.	VR6	Key transmitter, adjust "S" meter to read same as wattmeter.
As above. Insert a 0-500 mA DC meter in collector circuit of TR8 (Final Amp).	VC1 L12 L13	Key transmitter. Adjust for 5 watts output.
Modulation monitor between antenna and dummy load.	VR4	Connect an audio generator between ground and center pin of microphone connector. Set generator to 1 kHz and output to 10 mV. Key transmitter and set for 80% modulation.
TV (Ch. 2)	L14	Key transmitter. Adjust for MINIMUM interference.

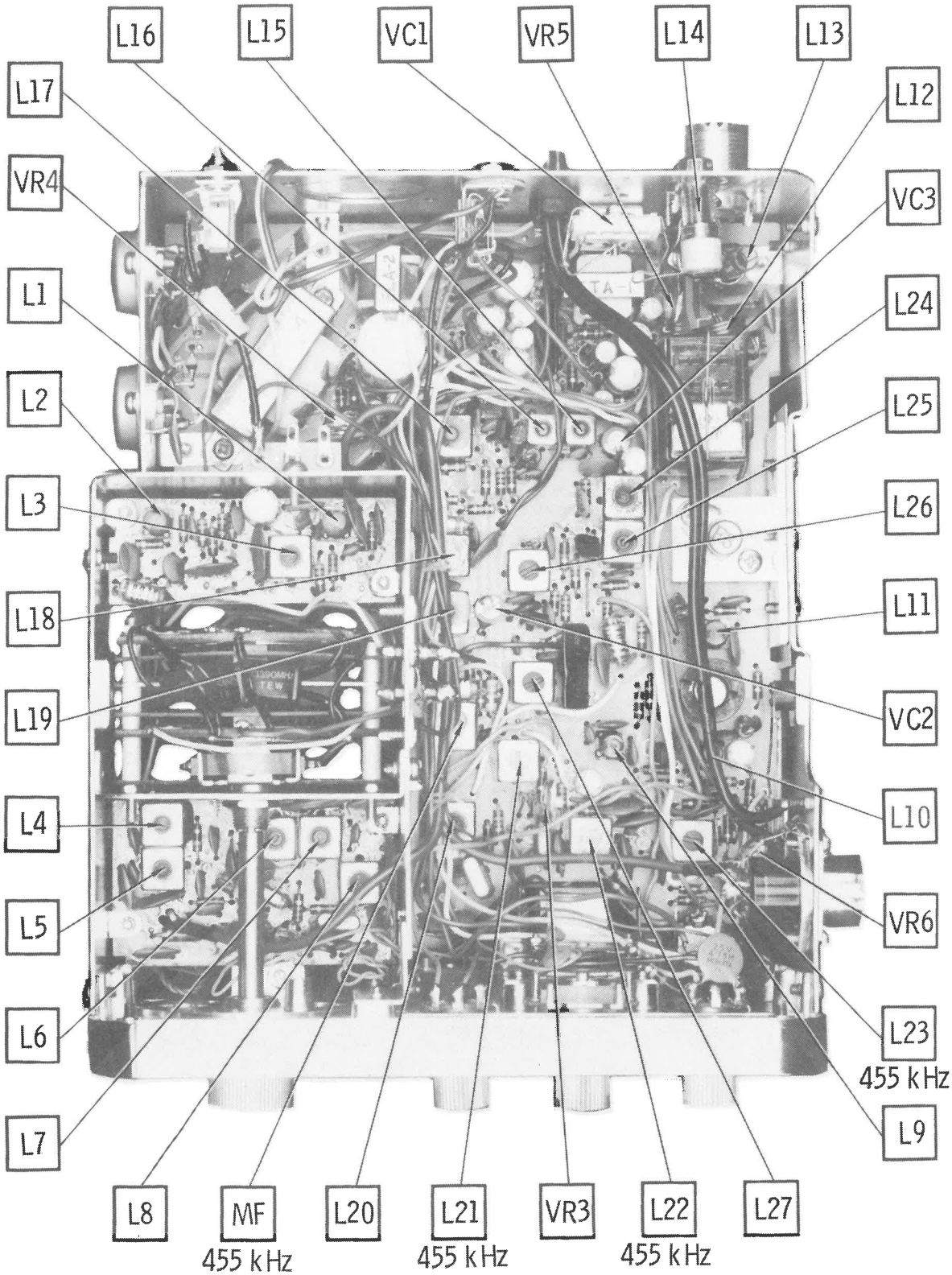
L16
L15
VC1
VR5
L14
L13
L17
L12
VR4
VC3
L1
L24
L2
L25
L3
L26
L18
L11
L19
VC2
L4
L10
L5
VR6
L6
L23
455 kHz
L7
L9
L8
MF
455 kHz
L20
L21
455 kHz
VR3
L22
455 kHz
L27

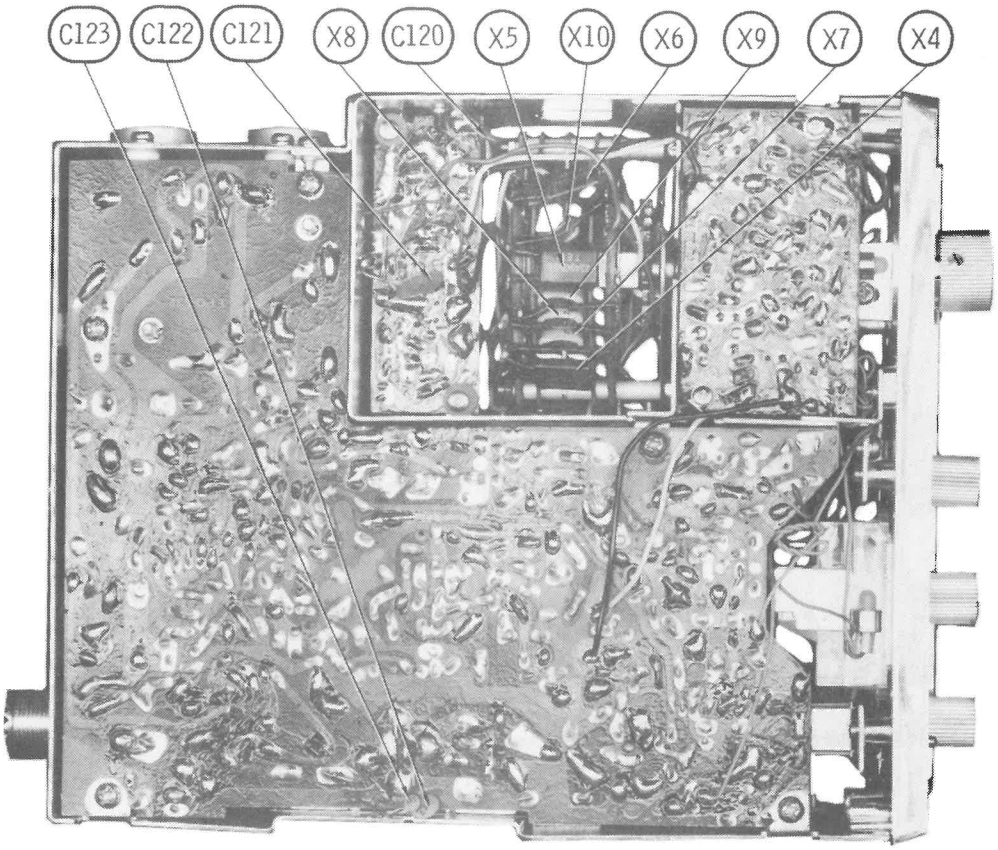
C123
C122
C121
X8
C120
X5
X10
X6
X9
X7
X4

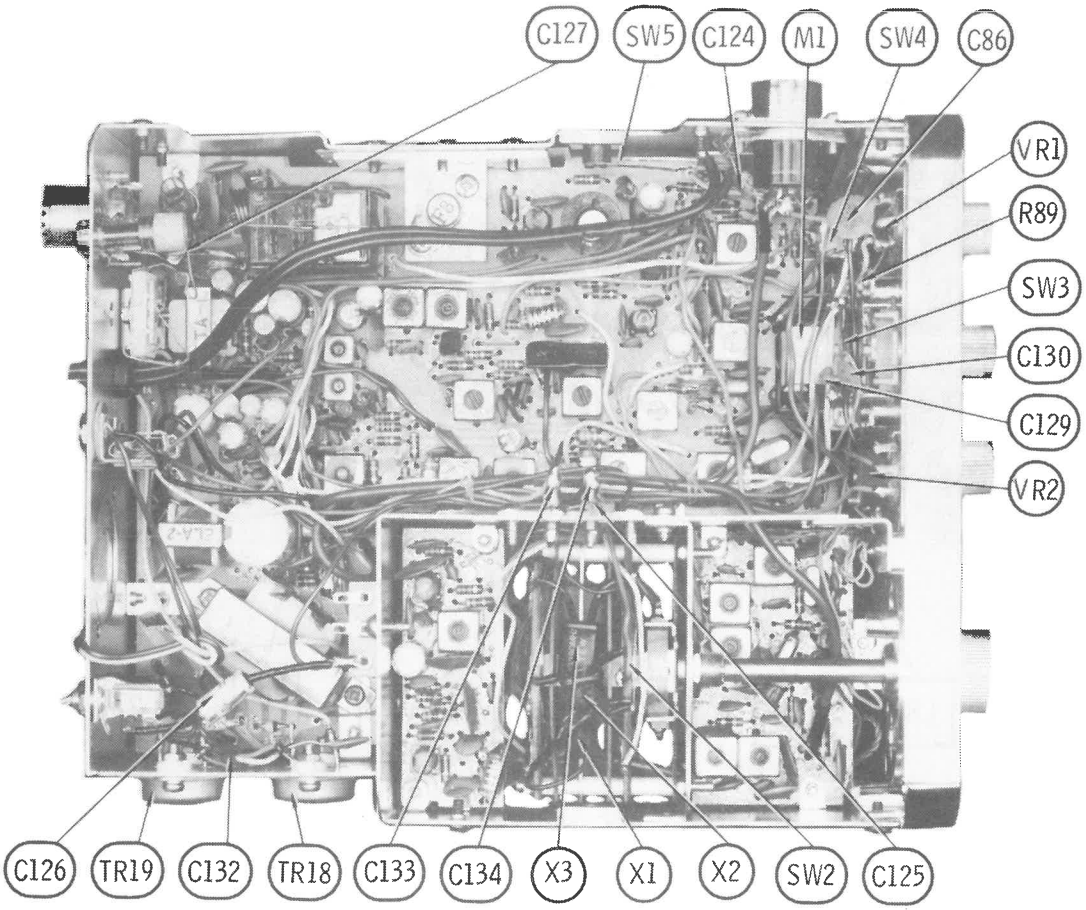
C127
SW5
C124
M1
SW4
C86
VR1
R89
SW3
C130
C129
VR2
C126
TR19
C132
TR18
C133
C134
X3
X1
X2
SW2
C125

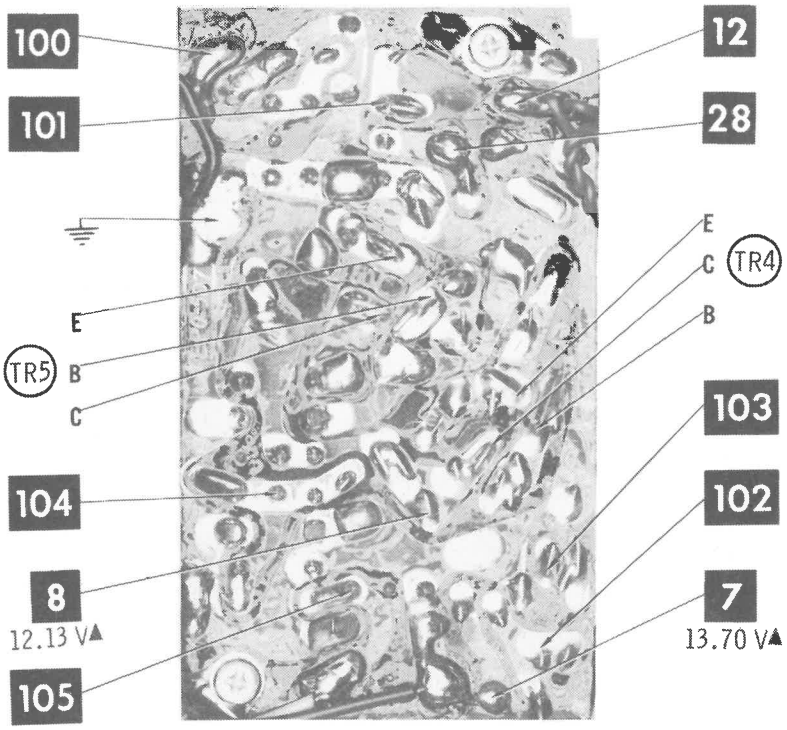

▲Measured in Transmit

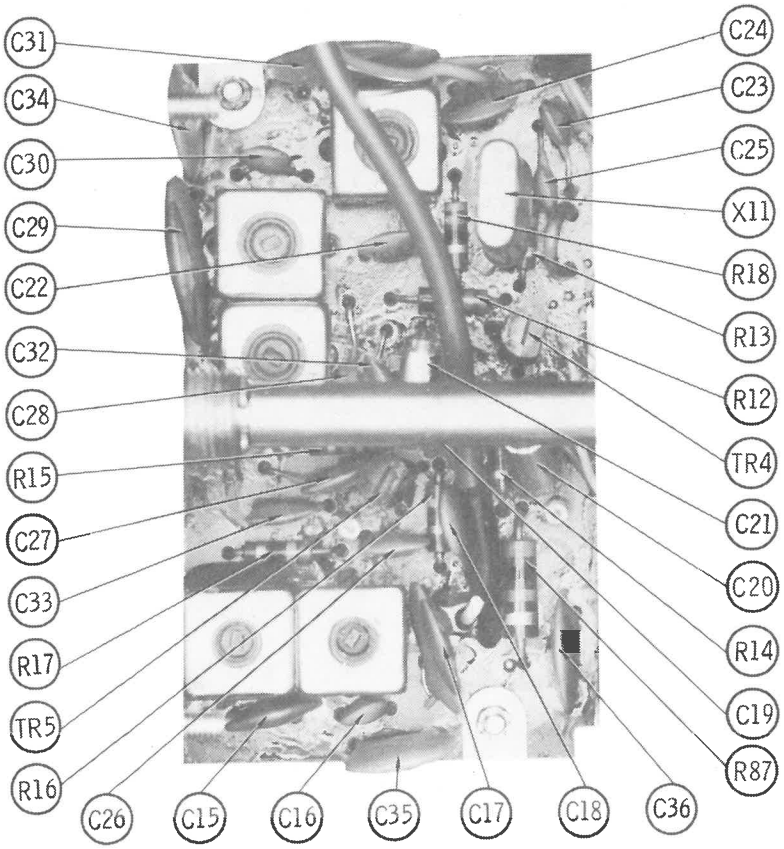

A Howard W. Sams CIRCUITRACE® Photo

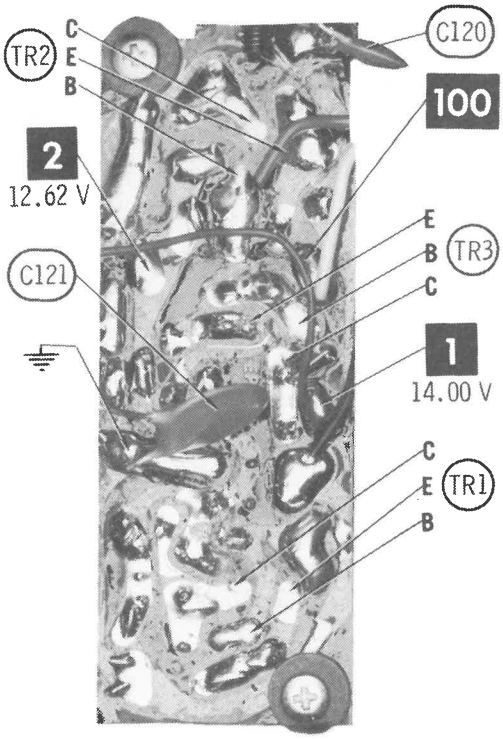

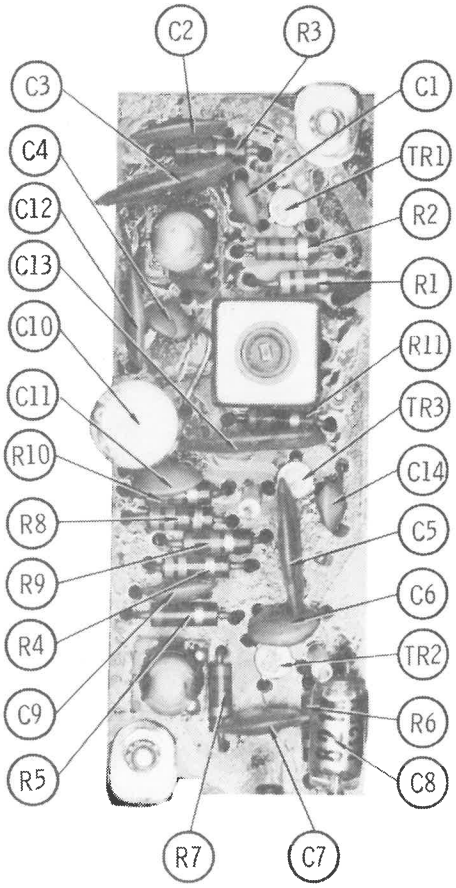

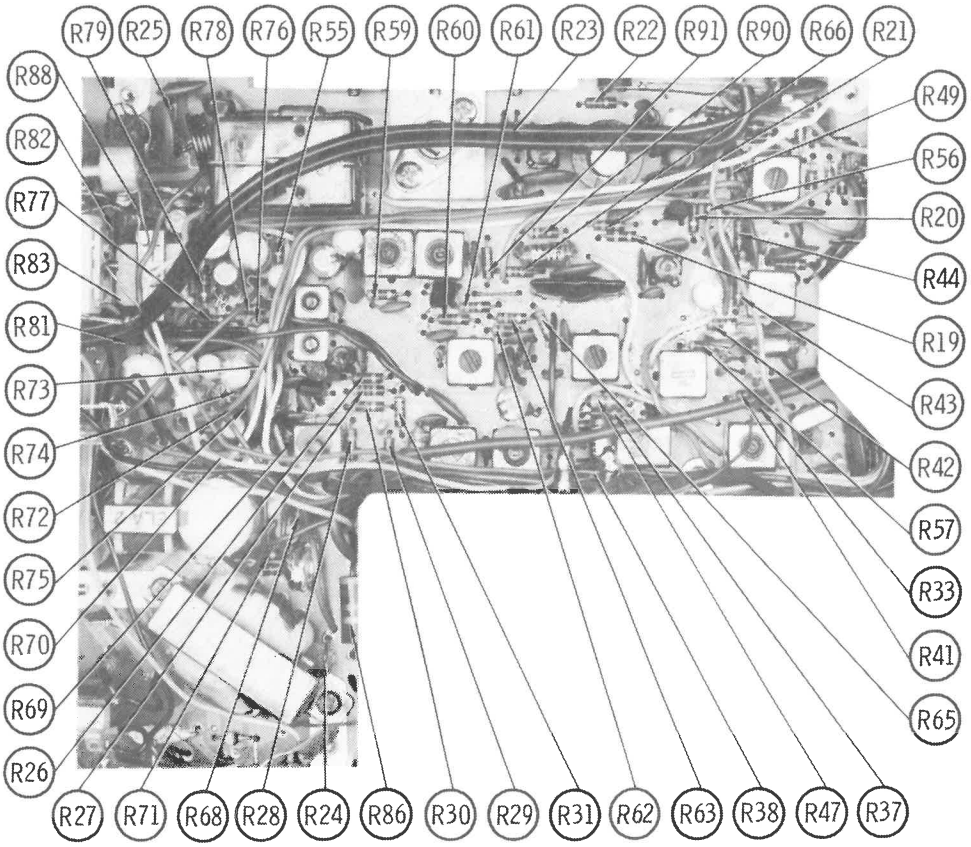

A Howard W. Sams CIRCUITRACE® Photo

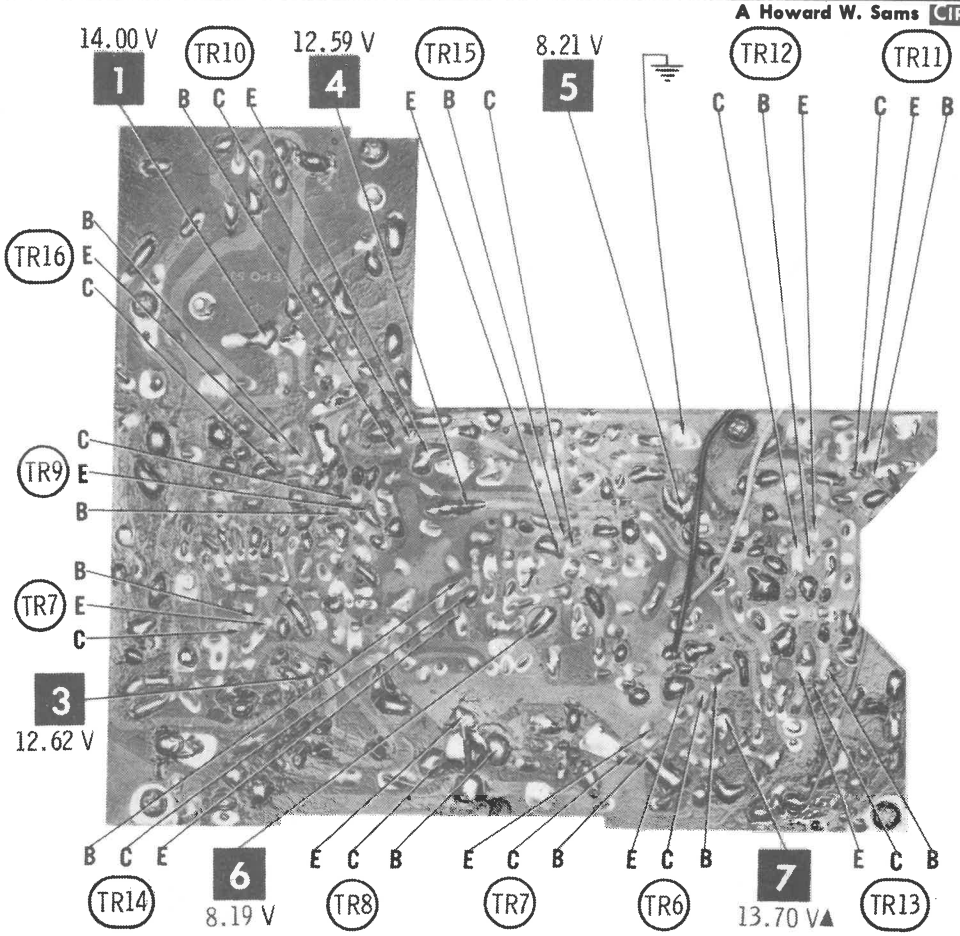

▲ Measured in Transmit

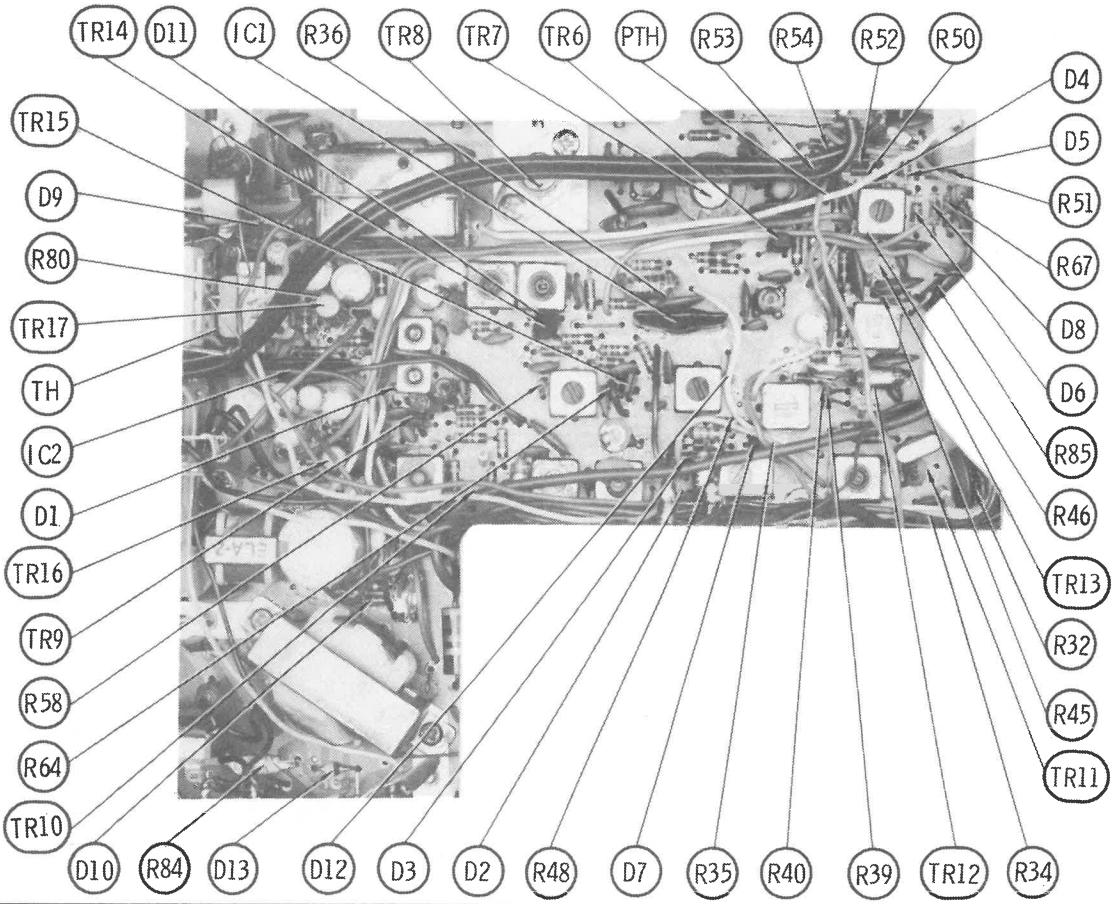

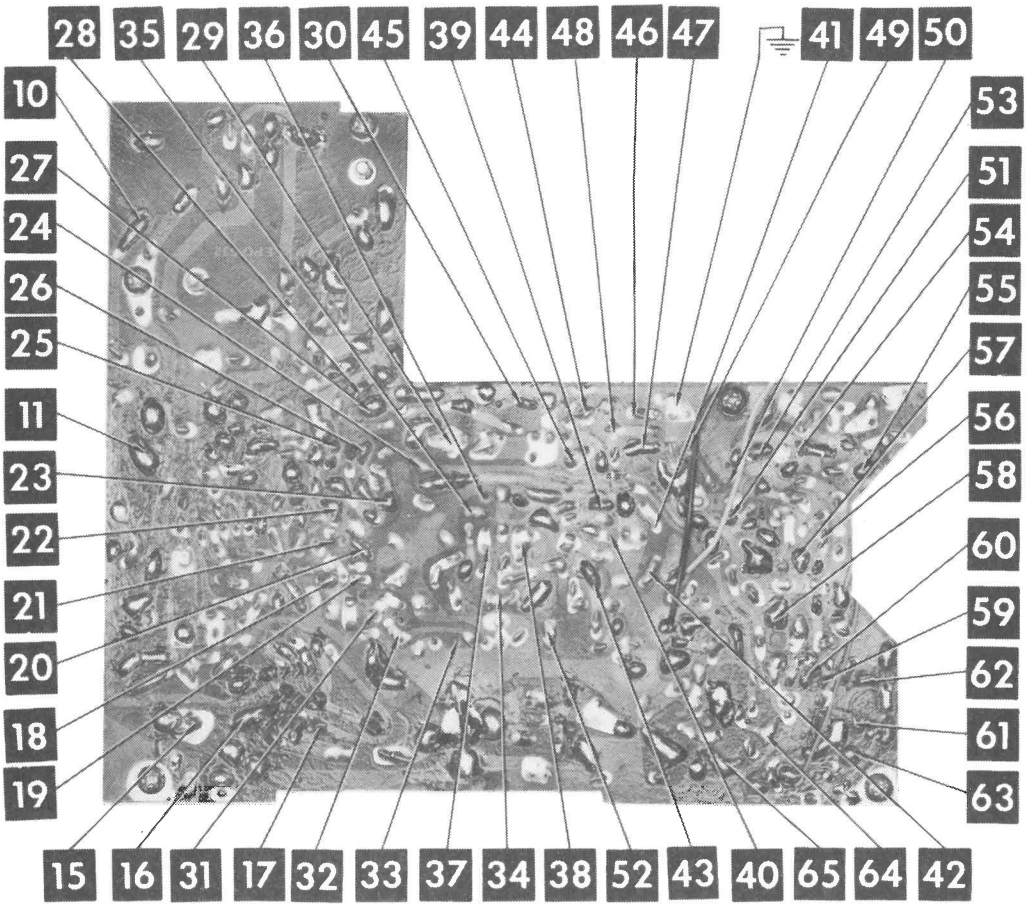

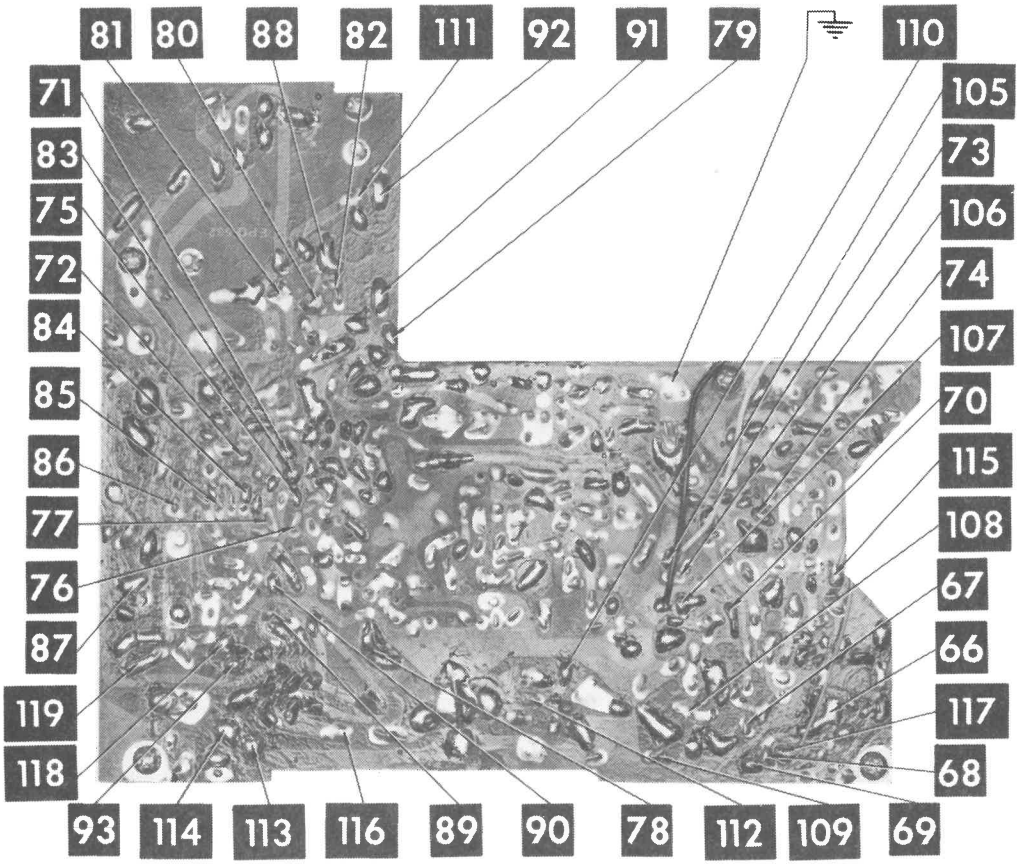

A Howard W. Sams CIRCUITRACE® Photo

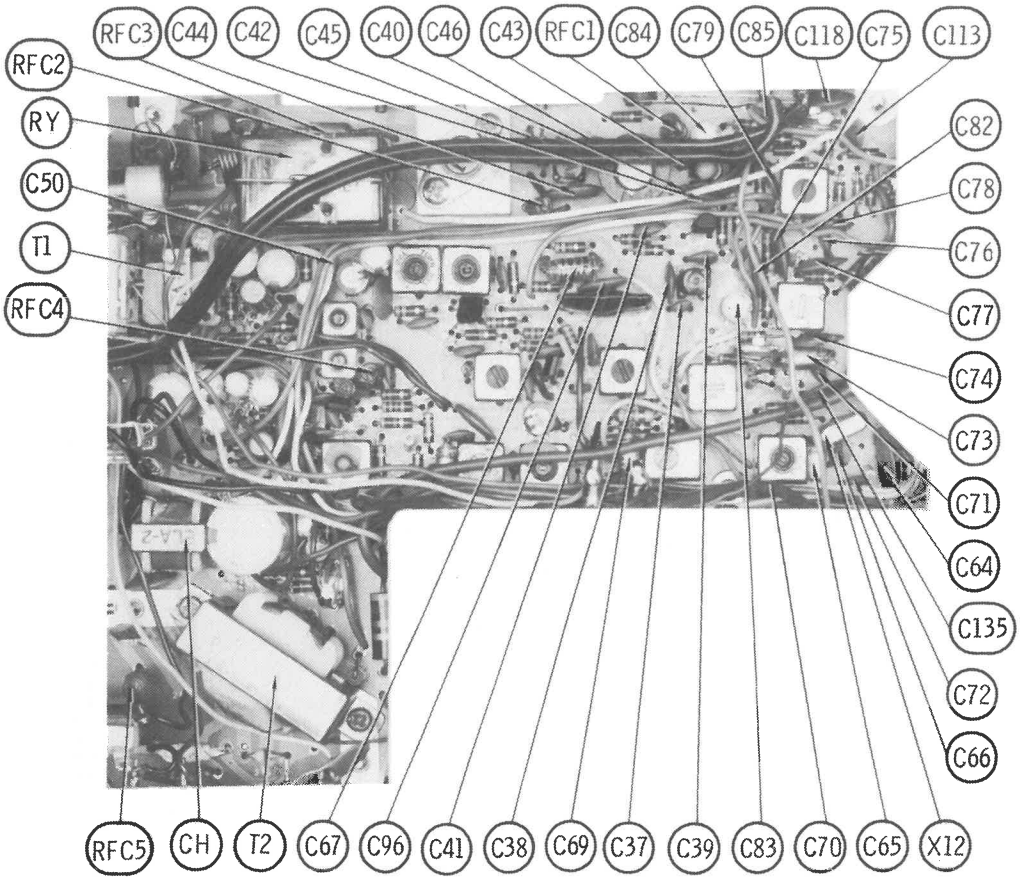
RFC3
C44
C42
C45
C40
C46
C43
RFC1
C84
C79
C85
C118
C75
C113
RFC2
RY
C50
T1
RFC4
C82
C78
C76
C77
C74
C73
C71
C64
C135
C72
C66
RFC5
CH
T2
C67
C96
C41
C38
C69
C37
C39
C83
C70
C65
X12

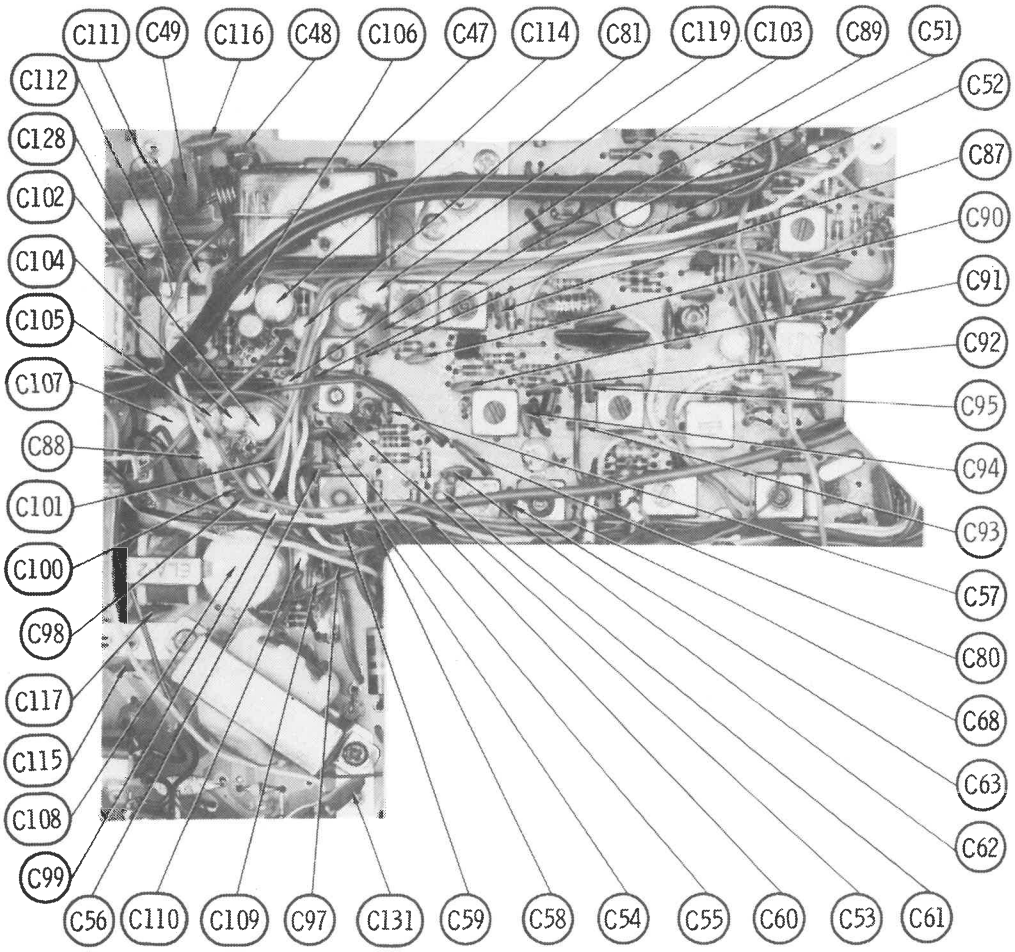
C111
C49
C116
C48
C106
C47
C114
C81
C119
C103
C89
C51
C112
C128
C102
C104
C105
C107
C88
C101
C100
C98
C117
C115
C108
C99
C52
C87
C90
C91
C92
C95
C94
C93
C57
C80
C68
C63
C62
C56
C110
C109
C97
C131
C59
C58
C54
C55
C60
C53
C61

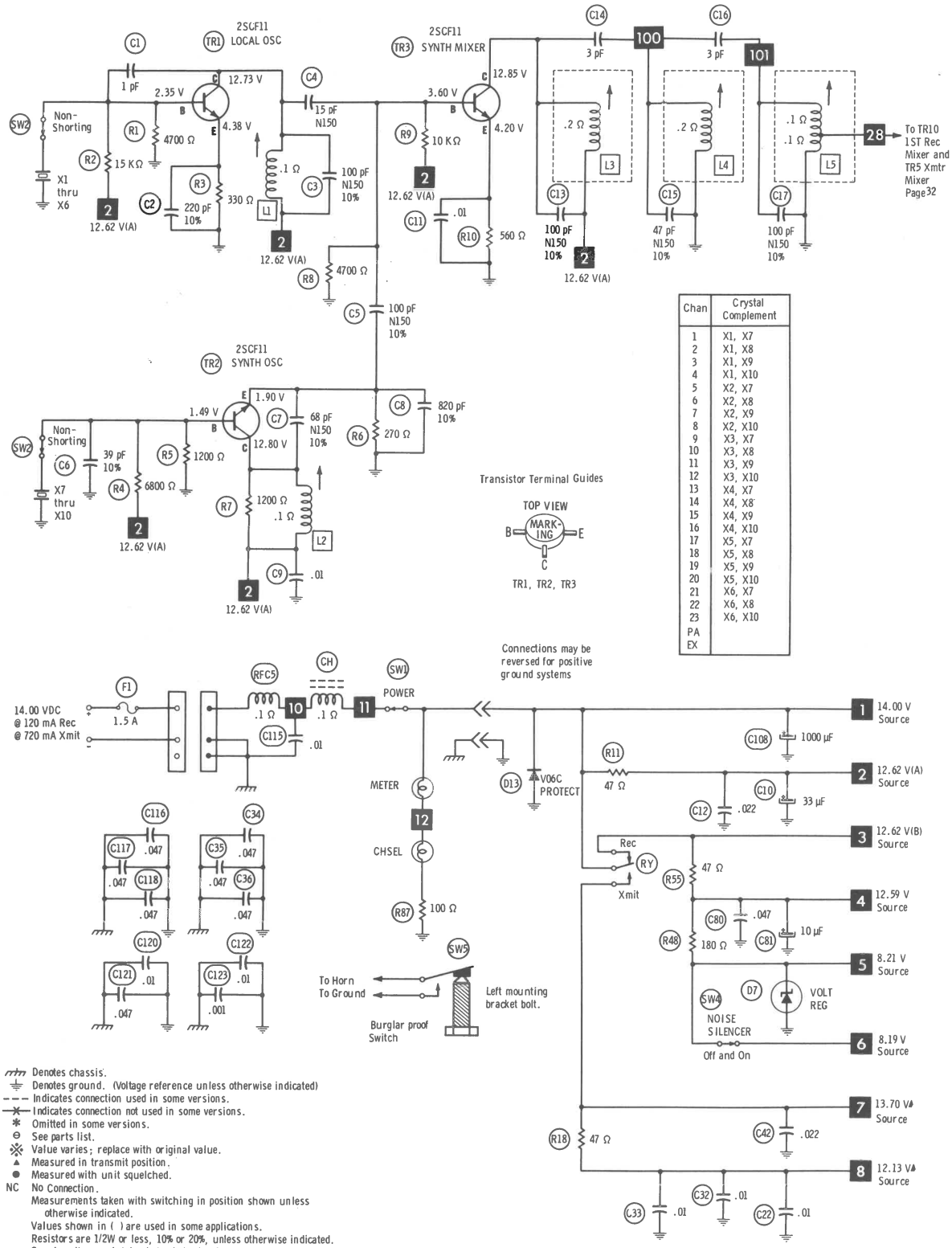

Chan	Crystal Complement
1	X1, X7
2	X1, X8
3	X1, X9
4	X1, X10
5	X2, X7
6	X2, X8
7	X2, X9
8	X2, X10
9	X3, X7
10	X3, X8
11	X3, X9
12	X3, X10
13	X4, X7
14	X4, X8
15	X4, X9
16	X4, X10
17	X5, X7
18	X5, X8
19	X5, X9
20	X5, X10
21	X6, X7
22	X6, X8
23	X6, X10
PA	
EX	

Denotes chassis.
Denotes ground. (Voltage reference unless otherwise indicated)
Indicates connection used in some versions.
Indicates connection not used in some versions.
* Omitted in some versions.
⊖ See parts list.
※ Value varies; replace with original value.
▲ Measured in transmit position.
● Measured with unit squelched.
NC No Connection.
Measurements taken with switching in position shown unless otherwise indicated.
Values shown in ( ) are used in some applications.
Resistors are 1/2W or less, 10% or 20%, unless otherwise indicated.
Supply voltage maintained at rated value for measurements.
Voltage and resistance measured with VTVM or equivalent meter, no signal applied and controls adjusted for normal operation.
Arrow on control indicates direction of advance.
Numbers assigned to terminals may not be found on the unit.
Transistor resistances vary widely; no resistance measurements taken.

A PHOTOFACT STANDARD NOTATION SCHEMATIC with CIRCUITRACE™

LAFAYETTE MODEL HB-625A

PARTS LIST AND DESCRIPTION

(When ordering parts, state Model, Part Number, and Description.)

SEMICONDUCTORS

ITEM No.	TYPE / MFGR. No. / PART No.	REPLACEMENT DATA						
		GENERAL ELECTRIC PART No.	INTERNATIONAL RECTIFIER PART No.	MALLORY PART No.	MOTOROLA PART No.	RCA PART No.	SPRAGUE PART No.	SYLVANIA PART No.
D1	1S155/1937-17 1S953 (1)	GE-300	D200	PTC214	HEPR0602	SK3100	RT218	ECG 177
D2	1N60/1000-17	1N60	1N60	PTC206	HEP135	SK3088		ECG 109
D3	1N60/1000-17	1N60	1N60	PTC206	HEP135	SK3088		ECG 109
D4	1N60/1000-17	1N60	1N60	PTC206	HEP135	SK3088		ECG 109
D5	1N60/1000-17	1N60	1N60	PTC206	HEP135	SK3088		ECG 109
D6	1N60/1000-17	1N60	1N60	PTC206	HEP135	SK3088		ECG 109
D7	RD9A/1794-17 8.16V Zener	GE-X11	Z-1208	ZB8.2	HEPZ0411	SK3060	RT240	ECG 5072
D8	1N60/1000-17	1N60	1N60	PTC206	HEP135	SK3088		ECG 109
D9	1N60/1000-17	1N60	1N60	PTC206	HEP135	SK3088		ECG 109
D10	1N60/1000-17	1N60	1N60	PTC206	HEP135	SK3088		ECG 109
D11	1S1555/1937-17 1S953 (1)	GE-300	D200	PTC214	HEPR0602	SK3100	RT218	ECG 177
D12	1N60/1000-17	1N60	1N60	PTC206	HEP135	SK3088		ECG 109
D13	V06C/1941-17	GE-504A	8D4 or 5A4D	PTC201 or PTC202	HEPR0052	SK3030 or SK3031	RT213 or RT214	ECG 116 or ECG 117
IC1	MVD-002B/1007-25							
IC2	MVD-001A/1009-25							
TR1	2SC183(R)/1210-17 2SCF11 (1)	GE-10	IRTR-70	PTC126	HEP723	SK3018	RT107	ECG 107
TR2	2SC183(R)/1210-17 2SCF11 (1)	GE-10	IRTR-70	PTC126	HEP723	SK3018	RT107	ECG 107
TR3	2SC184(R)/1634-17 2SCF11 (1)	GE-10	IRTR-70	PTC126	HEP723	SK3018	RT107	ECG 107
TR4	2SC815/1879-17 2SCF5 (1)	GE-20	IRTR-87	PTC125	HEP736	SK3020	RT102	ECG 123A
TR5	2SC815/1879-17 2SCF5 (1)	GE-20	IRTR-87	PTC125	HEP736	SK3020	RT102	ECG 123A
TR6	2SC815/1879-17 2SCF5 (1)	GE-20	IRTR-87	PTC125	HEP736	SK3020	RT102	ECG 123A
TR7	2SC781/1916-17 2SCF6 (1)		IRTR-87		HEPS3001	SK3048		ECG 195
TR8	2SCF8/1068-17		IRTR-65		HEPS3001	SK3049		ECG 224
TR9	2SC460(A)/1373-17 2SCF2 (1)	GE-17	IRTR-62	PTC101	HEP720	SK3039	RT107	ECG 108
TR10	2SC184(R)/1634-17 2SCF11 (1)	GE-10	TR-24	PTC126	HEP723	SK3018	RT107	ECG 107
TR11	2SC183(R)/1210-17 2SCF11 (1)	GE-10	IRTR-70	PTC126	HEP723	SK3018	RT107	ECG 107
TR12	2SC183(R)/1210-17 2SCF11 (1)	GE-10	IRTR-70	PTC126	HEP723	SK3018	RT107	ECG 107
TR13	2SC183(R)/1210-17 2SCF11 (1)	GE-10	IRTR-70	PTC126	HEP723	SK3018	RT107	ECG 107
TR14	2SC460/1373-17 2SCF2 (1)	GE-17	IRTR-80	PTC101	HEP720	SK3039	RT107	ECG 108
TR15	2SC460/1373-17 2SCF2 (1)	GE-17	IRTR-80	PTC101	HEP720	SK3039	RT107	ECG 108
TR16	2SB77/1060-17 2SBF1A (1)	GE-52	IRTR-85	PTC109	HEP254	SK3004	RT121	ECG 102A
TR17	2SB77/1060-17 2SBF1A (1)	GE-52	IRTR-85	PTC109	HEP254	SK3004	RT121	ECG 102A
TR18	2SB337(A)/1559-17 2SBF5 (1)	GE-13MP(6)	TR-02(7)	PTC105(7)	HEP230(7)	SK3013(6)	RT124(7)	ECG 104MP(6)
TR19	2SB337(A)/1559-17 2SBF5 (1)							

(1) Used in some versions.
(6) Matched pair.
(7) Two required - select matched pair.

ELECTROLYTIC CAPACITORS

ITEM No.	RATING		REPLACEMENT DATA					
			MFGR. PART No.	ARCO PART No.	CENTRALAB PART No.	CORNELL-DUBILIER PART No.	MALLORY PART No.	SPRAGUE PART No.
C10	33	16 V		ME-3-E-035	EP15-25	PC30-25	MTV30CB25	EV-1325
C81	10	16 V	2986-12	RME-B-E-010	EP15-10	PC10-25	VTT10A25	EV-1222
C83	33	10 V		ME-3-D-035	EP15-25	PC30-25	VTT33A10	EV-1125
C84	33	10 V		ME-3-D-035	EP15-25	PC30-25	VTT33A10	EV-1125
C85	1	50 V	3084-12	RME-A-J-001	EP50-2	PC1-50	MTV1CB50	EV-1615
				RME-A-G-001	EP30-2	PC1-50	MTV1CB50	EV-1315
C88	3.3	50 V	3363-12	RME-B-J-003	EP50-5	WBR5-50	VTT3R3A50	EV-1618
C99	33	16 V		ME-3-E-035	EP15-25	PC30-25	MTV30CB25	EV-1325
C102	33	10 V		ME-3-D-035	EP15-25	PC30-25	VTT33A10	EV-1125
C103	1	50 V		RME-A-J-001	EP50-2	PC1-50	MTV1CB50	EV-1615
C104	10	16 V	3102-12	RME-B-E-010	EP15-10	PC10-25	VTT10A25	EV-1222
				RME-A-D-010	EP15-10	PC10-25	VTT10A25	EV-1222
C105	33	10 V		ME-3-D-035	EP15-25	PC30-25	VTT33A10	EV-1125
C106	33	16 V		ME-3-E-035	EP15-25	PC30-25	MTV30CB25	EV-1325
C107	100	16 V	3078-12	RME-E-E-100	EP15-100	PC100-16	MTV100CD15	EV-1230
C108	1000	16 V	3055-12	RME-N-E-1000	EA15-1000	PC1000-16	TC1501B	EV-1260
C109	4.7	25 V	3090-12	RME-A-G-005	EP30-5	PC5-50	VTT4R7A50	EV-1319
C110	4.7	25 V	3090-12	RME-A-G-005	EP30-5	PC5-50	VTT4R7A50	EV-1319
C111	1	50 V		RME-A-J-001	EP50-2	PC1-50	MTV1CB50	EV-1615
C114	33	16 V		ME-3-E-035	EP15-25	PC30-25	MTV30CB25	EV-1325
C119	3.3	50 V	3363-12	RME-B-J-003	EP50-5	WBR5-50	VTT3R3A50	EV-1618
C126	33	16 V	3104-12	ME-3-E-035	EA15-25	WBR35-50	MTA30D15	TVA-1149.1

(CONTINUED ON PAGE 36)

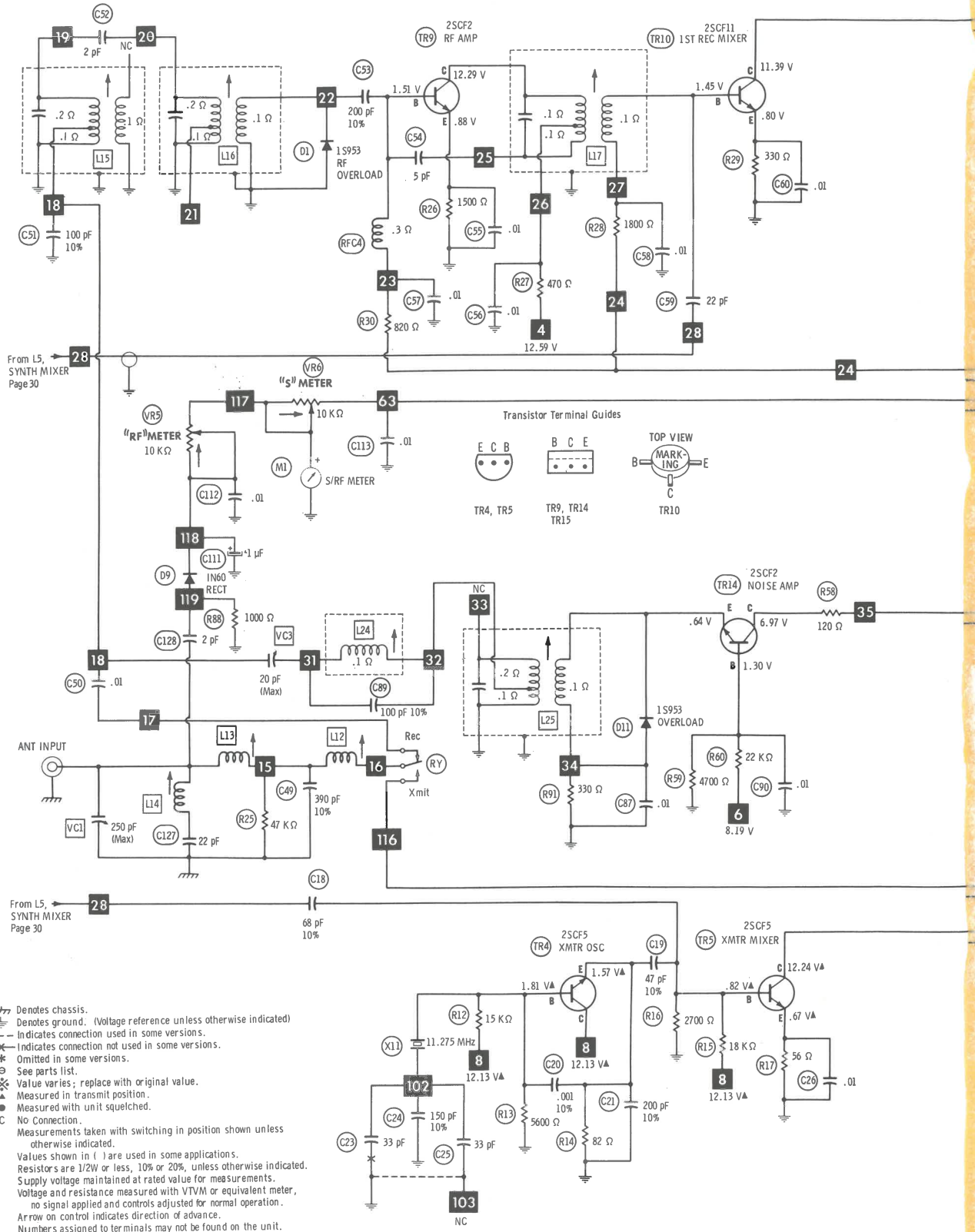

Denotes chassis.
Denotes ground. (Voltage reference unless otherwise indicated)
Indicates connection used in some versions.
Indicates connection not used in some versions.
Omitted in some versions.
See parts list.
Value varies; replace with original value.
▲ Measured in transmit position.
● Measured with unit squelched.
NC No Connection.
Measurements taken with switching in position shown unless otherwise indicated.
Values shown in ( ) are used in some applications.
Resistors are 1/2W or less, 10% or 20%, unless otherwise indicated.
Supply voltage maintained at rated value for measurements.
Voltage and resistance measured with VTVM or equivalent meter, no signal applied and controls adjusted for normal operation.
Arrow on control indicates direction of advance.
Numbers assigned to terminals may not be found on the unit.
Transistor resistances vary widely; no resistance measurements taken.

A PHOTOFACT STANDARD NOTATION SCHEMATIC
with CIRCUITRACE™

SEE NOTES ON PAGE 30

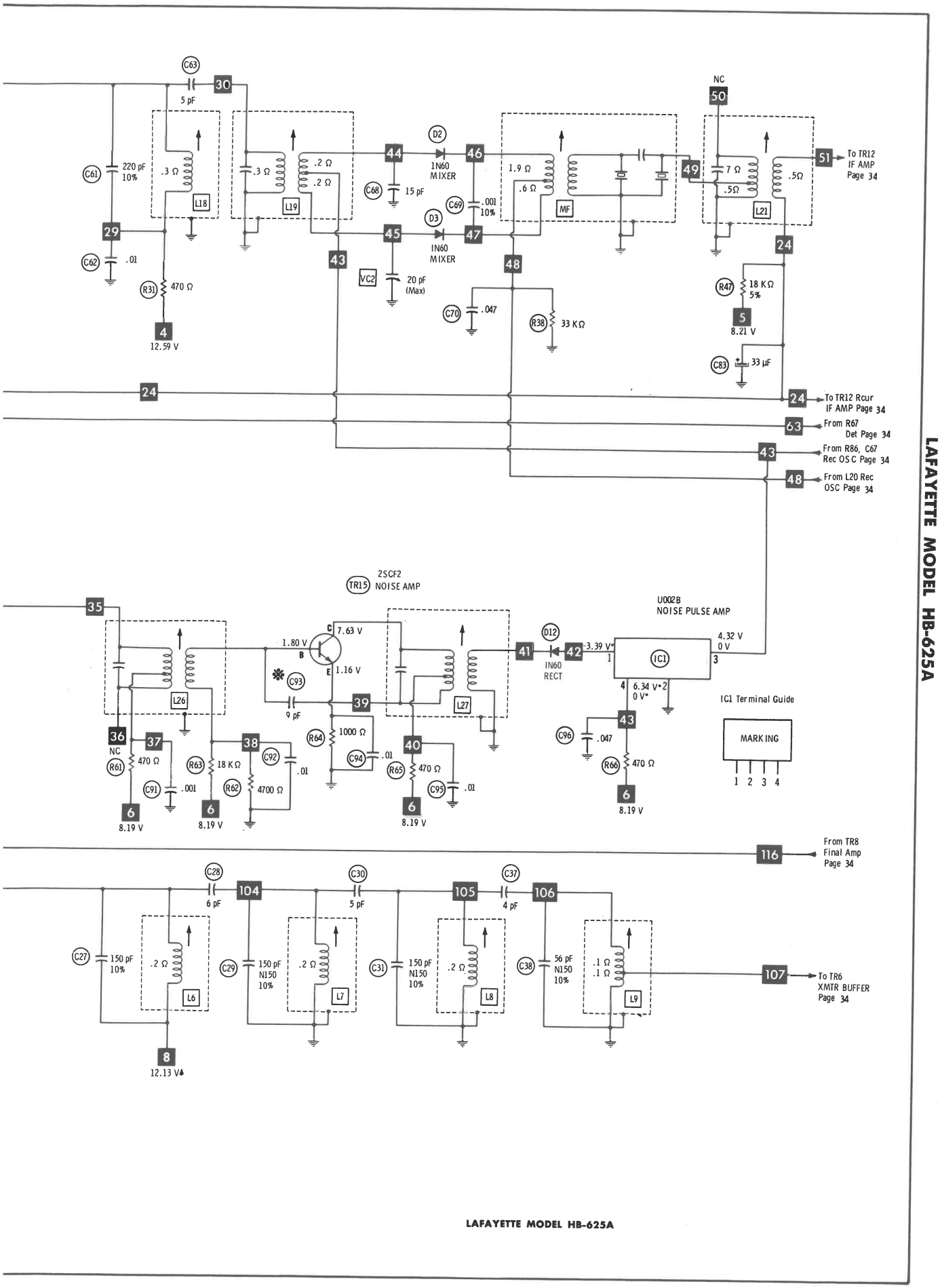

LAFAYETTE MODEL HB-625A

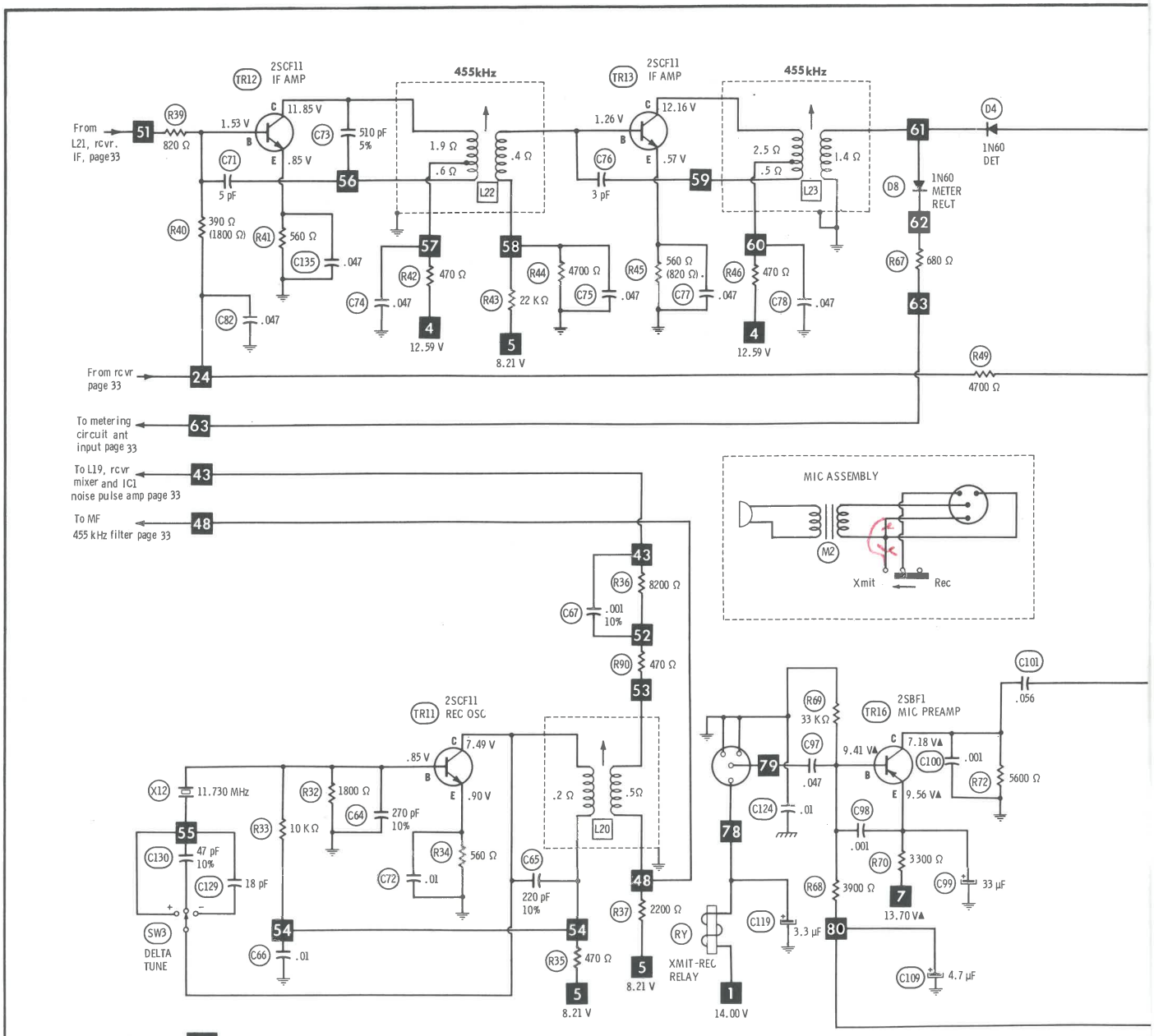

Denotes chassis.
Denotes ground. (Voltage reference unless otherwise indicated)
Indicates connection used in some versions.
Indicates connection not used in some versions.
* Omitted in some versions.
⊖ See parts list.
※ Value varies; replace with original value.
▲ Measured in transmit position.
● Measured with unit squelched.
NC No Connection.
Measurements taken with switching in position shown unless otherwise indicated.
Values shown in ( ) are used in some applications.
Resistors are 1/2W or less, 10% or 20%, unless otherwise indicated.
Supply voltage maintained at rated value for measurements.
Voltage and resistance measured with VTVM or equivalent meter, no signal applied and controls adjusted for normal operation.
Arrow on control indicates direction of advance.
Numbers assigned to terminals may not be found on the unit.
Transistor resistances vary widely; no resistance measurements taken.

A PHOTOFACT STANDARD NOTATION SCHEMATIC
with CIRCUITRACE®

SEE NOTES ON PAGE 30

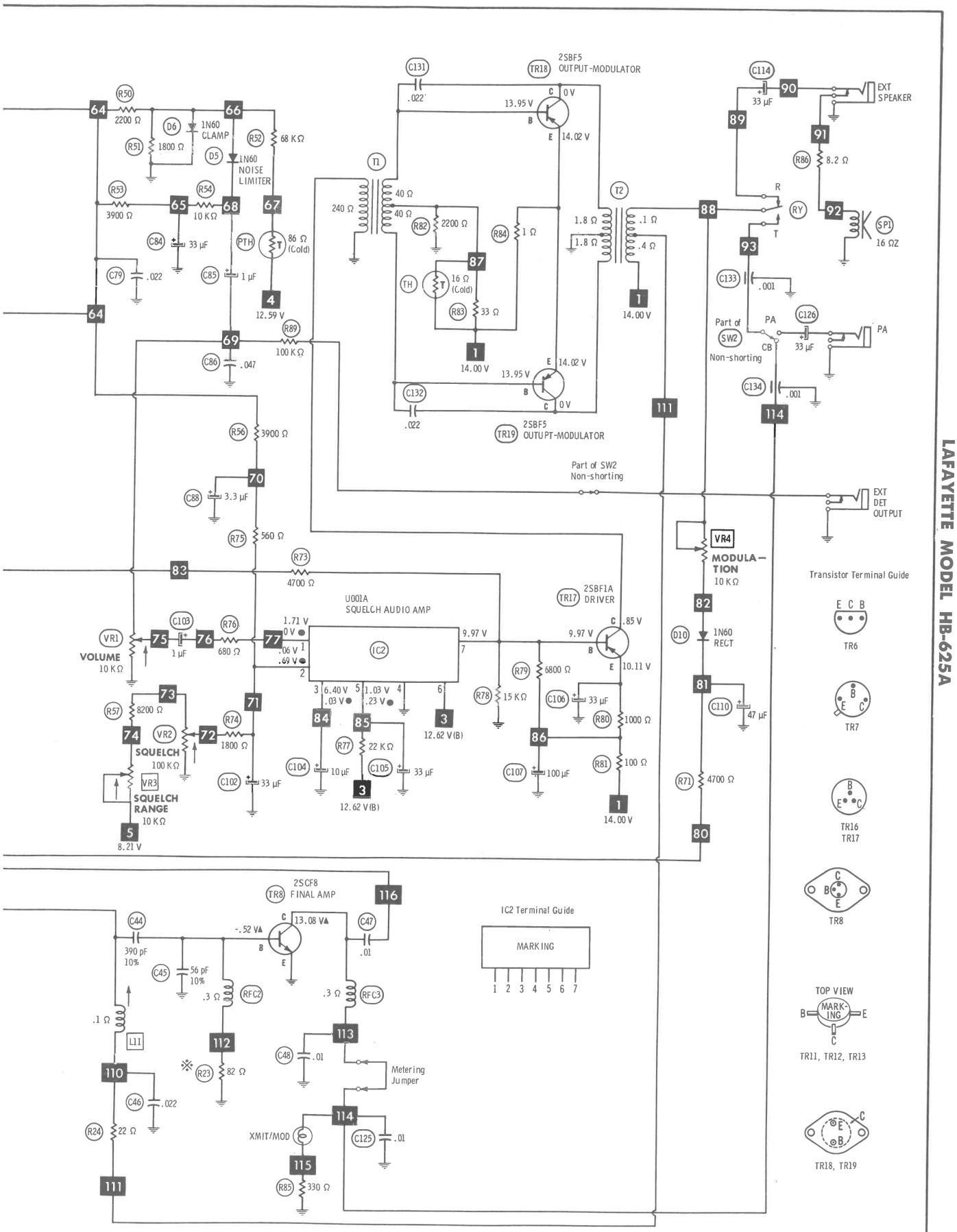

LAFAYETTE MODEL HB-625A

PARTS LIST AND DESCRIPTION (CONTINUED)

(When ordering parts, state Model, Part Number, and Description.)

CAPACITORS (cont)

ITEM No.	RATING			MFGR. PART No.	REPLACEMENT DATA				
					ARCO/ELMENCO PART No.	CENTRALAB PART No.	CORNELL-DUBILIER PART No.	MALLORY PART No.	SPRAGUE PART No.
C1	1							CN0510	10TCC-V10
C2	220		10%		CCD-221	DD-221	GP220	GP322	10TS-T22
C3	100	N150	10%	1110-12	*			*	10TCP-T10
C4	15	N150		1230-12	*			*	10TCP-Q15
C5	100	N150	10%	1110-12	*			*	10TCP-T10
C6	39		10%					CN0439	10TCC-Q39
C7	68	N150	10%	2995-12	*			*	10TCP-Q68
C8	820		10%		DM-19-821		CD19F821J500	SX382	MS-382
C9	.01				CCD-103	CK-103	MGP01	TA110	TG-S10
C11	.01				CCD-103	CK-103	MGP01	TA110	TG-S10
C12	.022				CCD-203	CK-203	MGP02	TA120	TG-S20
C13	100	N150	10%	1110-12	*			*	10TCP-T10
C14	3								10TCC-V30
C15	47	N150	10%		*			*	10TCP-Q47
C16	3								10TCC-V30
C17	100	N150	10%	1110-12	*			*	10TCP-T10
C18	68		10%			DTZ-68		CN0468	10TCC-Q68
C19	47		10%		CCT0-470	DTZ-47	NP047	CN0447	10TCC-Q47
C20	.001		10%		DM-19-102J	CPR-1000J	CD19F102J500	SX210	424ME1001J501
C21	200		10%		DM-19-201J	CPR-200J	CD15FD201J03	SX320	424ME2000J501
C22	.01				CCD-103	CK-103	MGP01	TA110	TG-S10
C23	33				CCT0-330	DTZ-33	NP033	CN0433	10TCC-Q33
C24	150		10%		CCD-151	DD-151	GP150	GP315	10TS-T15
C25	33				CCT0-330	DTZ-33	NP033	CN0433	10TCC-Q33
C26	.01				CCD-103	CK-103	MGP01	TA110	TG-S10
C27	150		10%		CCD-151	DD-151	GP150	GP315	10TS-T15
C28	6			2361-12					
C29	150	N150	10%		*			*	10TCP-T15
C30	5						NP05		10TCC-V50
C31	150	N150	10%		*			*	10TCP-T15
C32	.01				CCD-103	CK-103	MGP01	TA110	TG-S10
C33	.01				CCD-103	CK-103	MGP01	TA110	TG-S10
C34	.047				CCD-503	CK-503	MGP05	TA150	TG-S50
C35	.047				CCD-503	CK-503	MGP05	TA150	TG-S50
C36	.047				CCD-503	CK-503	MGP05	TA150	TG-S50
C37	4						NP03P9		10TCC-V39
C38	56	N150	10%	3313-12	*			*	10TCP-Q56
C39	.01				CCD-103	CK-103	MGP01	TA110	TG-S10
C40	100	N150	10%	1110-12	*			*	10TCP-T10
C41	.01				CCD-103	CK-103	MGP01	TA110	TG-S10
C42	.022				CCD-203	CK-203	MGP02	TA120	TG-S20
C43	.01				CCD-103	CK-103	MGP01	TA110	TG-S10
C44	390		10%		CCD-391	DD-391	GP390	GP339	10TS-T39
C45	56		10%		CCD-560	DD-560		GP456	10TS-Q56
C46	.022				CCD-203	CK-203	MGP02	TA120	TG-S20
C47	.01				CCD-103	CK-103	MGP01	TA110	TG-S10
C48	.01				CCD-103	CK-103	MGP01	TA110	TG-S10
C49	390		10%		CCD-391	DD-391	GP390	GP339	10TS-T39
C50	.01				CCD-103	CK-103	MGP01	TA110	TG-S10
C51	100		10%		CCT0-101	DTZ-100	NP0100	CN0310	10TCC-T10
C52	2					DTZ-2R2	NP02P2	CN0522	10TCC-V22
C53	200		10%		DM-19-201J	CPR-200J	CD15FD201J03	SX320	424ME2000J501
C54	5						NP05		10TCC-V50
C55	.01				CCD-103	CK-103	MGP01	TA110	TG-S10
C56	.01				CCD-103	CK-103	MGP01	TA110	TG-S10
C57	.01				CCD-103	CK-103	MGP01	TA110	TG-S10
C58	.01				CCD-103	CK-103	MGP01	TA110	TG-S10
C59	27				CCT0-270		NP027	CN0427	10TCC-Q27
C60	.01				CCD-103	CK-103	MGP01	TA110	TG-S10
C61	220		10%		DM-19-221J	CPR-220J	CD15FD221J03	SX322	424ME2200J501
C62	.01				CCD-103	CK-103	MGP01	TA110	TG-S10
C63	5						NP05		10TCC-V50
C64	270		10%		CCD-270	DD-271	GP270	GP327	10TS-T27
C65	220		10%		DM-19-221J	CPR-220J	CD15FD221J03	SX322	424ME2200J501
C66	.01				CCD-103	CK-103	MGP01	TA110	TG-S10
C67	.001				DM-19-102J	CPR-1000J	CD19F102J500	SX210	424ME1001J501
C68	15				CCT0-150	DTZ-15	NP015	CN0415	10TCC-Q15
C69	.001				DM-19-102J	CPR-1000J	CD19F102J500	SX210	424ME1001J501
C70	.047				CCD-503	CK-503	MGP05	TA150	TG-S50
C71	5						NP05		10TCC-V50
C72	.01				CCD-103	CK-103	MGP01	TA110	TG-S10
C73	510		5%		DM-19-511J	CPR-510J	CD15FD511J03	SX351	424ME5100J501
C74	.047				CCD-503	CK-503	MGP05	TA150	TG-S50
C75	.047				CCD-503	CK-503	MGP05	TA150	TG-S50
C76	3								10TCC-V30
C77	.047				CCD-503	CK-503	MGP05	TA150	TG-S50
C78	.047				CCD-503	CK-503	MGP05	TA150	TG-S50
C79	.022				CCD-203	CK-203	MGP02	TA120	TG-S20
C80	.047				CCD-503	CK-503	MGP05	TA150	TG-S50
C82	.047				CCD-503	CK-503	MGP05	TA150	TG-S50
C86	.047				CCD-503	CK-503	MGP05	TA150	TG-S50
C87	.01				CCD-103	CK-103	MGP01	TA110	TG-S10
C89	100		10%		CCT0-101	DTZ-100	NP0100	CN0310	10TCC-T10
C90	.01				CCD-103	CK-103	MGP01	TA110	TG-S10
C91	.001				CCD-102	DD-102	GP1000	SM210	2SS-D10
C92	.01				CCD-103	CK-103	MGP01	TA110	TG-S10
C93	9				CCT0-100	DTZ-10	NP010	CN0410	10TCC-Q10
C94	.01				CCD-103	CK-103	MGP01	TA110	TG-S10
C95	.01				CCD-103	CK-103	MGP01	TA110	TG-S10
C96	.047				CCD-503	CK-503	MGP05	TA150	TG-S50
C97	.047				CCD-503	CK-503	MGP05	TA150	TG-S50
C98	.001				CCD-102	DD-102	GP1000	SM210	2SS-D10
C100	.001				CCD-102	DD-102	GP1000	SM210	2SS-D10
C101	.056				1DP-2-563			EWF1A156	1PB-S56
C112	.01				CCD-103	CK-103	MGP01	TA110	TG-S10
C113	.01				CCD-103	CK-103	MGP01	TA110	TG-S10
C115	.01				CCD-103	CK-103	MGP01	TA110	TG-S10
C116	.047				CCD-503	CK-503	MGP05	TA150	TG-S50
C117	.047				CCD-503	CK-503	MGP05	TA150	TG-S50
C118	.047				CCD-503	CK-503	MGP05	TA150	TG-S50

PARTS LIST AND DESCRIPTION (CONTINUED)

(When ordering parts, state Model, Part Number, and Description.)

CAPACITORS

ITEM No.	RATING	MFGR. PART No.	REPLACEMENT DATA				
			ARCO/ELMENCO PART No.	CENTRALAB PART No.	CORNELL-DUBILIER PART No.	MALLORY PART No.	SPRAGUE PART No.
C120	.01		CCD-103	CK-103	MGP01	TA110	TG-S10
C121	.047		CCD-503	CK-503	MGP05	TA150	TG-S50
C122	.01		CCD-103	CK-103	MGP01	TA110	TG-S10
C123	.001		CCD-102	DD-102	GP1000	SM210	2SS-D10
C124	.01		CCD-103	CK-103	MGP01	TA110	TG-S10
C125	.01		CCD-103	CK-103	MGP01	TA110	TG-S10
C127	22		CCTO-220	DTZ-20	NPO20	CNO420	10TCC-Q20
C128	2			DTZ-2R2	NPO2P2	CNO522	10TCC-V22
C129	18		CCTO-180		NPO18	CNO418	10TCC-Q18
C130	47 10%		CCTO-470	DTZ-47	NPO47	CNO447	10TCC-Q47
C131	.022		CCD-203	CK-203	MGP02	TA120	TG-S20
C132	.022		CCD-203	CK-203	MGP02	TA120	TG-S20
C133	.001	#2931-12					
C134	.001	#2931-12					
C135	.047		CCD-503	CK-503	MGP05	TA150	TG-S50
VC1	250 (Max)	#2930-12					
VC2	20 (Max)	#2804-12					
VC3	20 (Max)	#2804-12					

* Not normally in distributor's stock. Available thru distributor on order to manufacturer.

CONTROLS (All wattages 1/2 watt, or less, unless listed)

ITEM No.	FUNCTION	RESIST-ANCE	REPLACEMENT DATA				
			MFGR. PART No.	CENTRALAB PART No.	CLAROSTAT PART No.	CTS—IRC PART No.	MALLORY PART No.
VR1	Volume/Switch	10K	15-43-11 (ERV-9)				
VR2	Squelch	10K	1542-11 (ERV-10)				
VR3	Squelch Range	10K	2474-13 (ERP-2)	TSV-10K(1) or T-10K (1)	C-103 (1)	X201R103B (1)	MTC14L1 (1)
VR4	Modulation	10K	2474-13 (ERP-2)	TSV-10K(1) or T-10K (1)	C-103 (1)	X201R103B (1)	MTC14L1 (1)
VR5	"RF" Meter	10K	2474-13 (ERP-2)	TSV-10K(1) or T-10K (1)	C-103 (1)	X201R103B (1)	MTC14L1 (1)
VR6	"S" Meter	10K	2474-13 (ERP-2)	TSV-10K(1) or T-10K (1)	C-103 (1)	X201R103B (1)	MTC14L1 (1)

(1) Cut off one of the end terminals and bend to fit PC board.

RESISTORS (Power and Special)

ITEM No.	RATING	REPLACEMENT DATA	
		WORKMAN PART No.	MFGR. PART No.
R84	1 (5W WW)		2473-13
TH1	16 (Cold)		1638-17

ITEM No.	RATING	REPLACEMENT DATA	
		WORKMAN PART No.	MFGR. PART No.
PTH1	86 (Cold)		2305-13

COILS (RF-IF)

ITEM No.	USE	REPLACEMENT DATA			
		PART No.	MEISSNER PART No.	MILLER PART No.	REMARKS
L1	Local Osc	2218-23			
L2	Synthesizer Osc	2219-23			
L3	Synth. Mixer Output				
L4	Synth. Mixer Output	2221-23			
L5	Synth. Mixer Ouptut	2222-23			
L6	Xmtr Mixer Output	2220-23			
L7	Xmtr Mixer Output	2220-23			
L8	Xmtr Mixer Output	2220-23			
L9	Buffer Input	2224-23			
L10	Buffer	2225-23			
L11	Driver	2226-23			
L12	RF Filter (4 Turns)	2227-23			
L13	RF Filter	2215-23			
L14	TVI Trap	2216-23			
L15	Ant Matching	2228-23			
L16	Ant Matching	2228-23			
L17	RF Amp	2229-23			
L18	Rec Mixer (Pri)	1945-24			
L19	Rec Mixer (Sec)	2017-24			
L20	Rec Osc	2230-23			
L21	Interstage IF	2007-24	16-9026	8517	
L22	Interstage IF	2008-24	16-9027	2067	
L23	Output IF	2038-24	16-9028	2068	
L24	Input Noise Amp (Pri)	2039-24			
L25	Input Noise Amp (Sec)	2449-23			
L26	Interstage Noise Amp	2450-23			
L27	Output Noise Amp	2451-23			
MF	IF Input	2043-24			
RFC1	RF Choke (2.2 uH)	2240-23	19-1002	74F226AP	
RFC2	RF Choke (2.2 uH)	2240-23	19-1002	74F226AP	
RFC3	RF Choke (2.2 uH)	2240-23	19-1002	74F226AP	
RFC4	RF Choke (2.2 uH)	2240-23	19-1002	74F226AP	
RFC5	RF Choke (1.1 uH)	2217-23	19-2009	74F126AP	

PARTS LIST AND DESCRIPTION (CONTINUED)

(When ordering parts, state Model, Part Number, and Description.)

FILTER CHOKE

ITEM No.	RATINGS			REPLACEMENT DATA				NOTES
	CURRENT (Measured)	DC RES.	INDUCTANCE (0 CURRENT 1000~)	MFGR. PART No.	STANCOR PART No.	THORDARSON PART No.	TRIAD PART No.	
CH1	1200 mA	.1	210 uH	1090-15 [ELA-2]				[ ] On unit

TRANSFORMER (Driver)

ITEM No.	TURNS RATIO			REPLACEMENT DATA				NOTES
	PRI.	SEC. 1	SEC. 2	MFGR. PART No.	STANCOR PART No.	THORDARSON PART No.	TRIAD Part No.	
T1	2.4	1 CT		1697-15 [ETA-1]				[ ] On unit

TRANSFORMER (Audio Output)

ITEM No.	IMPEDANCE		REPLACEMENT DATA				NOTES
	PRI.	SEC.	MFGR. PART No.	STANCOR PART No.	THORDARSON PART No.	TRIAD PART No.	
T2	56 CT	16	1072-15 [ETA-4]				[ ] On unit

SPEAKER

ITEM No.	TYPE	REPLACEMENT DATA		NOTES
		MFGR. PART No.	QUAM PART No.	
SP1	3"x 5" PM, 16 ohms	1203-36	35A05Z16	

FUSE DEVICES

ITEM No.	DESCRIPTION	REPLACEMENT DATA						
		PART No.		BUSS PART No.		LITTELFUSE PART No.		WORKMAN PART No.
		DEVICE	HOLDER	DEVICE	HOLDER	DEVICE	HOLDER	DEVICE
F1	1.5A Quick Acting			AGC1-1/2	HDJ	31201.5	150145	

MISCELLANEOUS

ITEM No.	PART NAME	PART No.	NOTES
K1	Relay	1067-37	Rec/Xmit
MF1	Mechanical Filter	2043-24	455 kHz
SW2	Switch	1248-14	Channel Selector
SW3	Switch	1762-14	Delta Tune
SW4	Switch	1822-14	Noise silencer
SW5	Switch	1733-14	Theft
X1	Crystal	1100-35	23.290 MHz
X2	Crystal	1099-35	23.340 MHz
X3	Crystal	1098-35	23.390 MHz
X4	Crystal	1101-35	23.440 MHz
X5	Crystal	1102-35	23.490 MHz
X6	Crystal	1103-35	23.540 MHz
X7	Crystal	1105-35	14.950 MHz
X8	Crystal	1106-35	14.960 MHz
X9	Crystal	1104-35	14.970 MHz
X10	Crystal	1107-35	14.990 MHz
X11	Crystal	1096-35	11.275 MHz
X12	Crystal	1097-35	11.730 MHz

CABINETS & CABINET PARTS (When ordering specify model, chassis & color)

ITEM	PART No.
Cover, Top	6744-10
Cover, Bottom	3469-10
Front grill	7383-10
Front panel	7384-10
Knob, Channel	1223-18
Knob, Volume	1224-18

ITEM	PART No.
Knob, Squelch	1224-18
Knob, Delta Tune	1224-18
Knurled Screw (mounting bracket)	2701-10
Mobile Mounting Bracket	2259-10
Microphone Bracket	2260-10

ACCESSORIES

ITEM	MFGR. PART No.	REMARKS
Microphone	1010-34	EAM-1
DC Power Cord	1209-38	ENO-9

WIRING DATA

General-use Hook-up Wire ..... Use BELDEN No. 8530 (Solid) Available in 12 Colors
8524 (Stranded) Available in 12 Colors

Shielded Antenna Lead ..... Use BELDEN No. 8214 Lowest-loss (RG-8/U Type)
8237 Low-loss (RG-8/U)
8240 (Solid) Miniature (RG-58/U)
8259 (Stranded) Miniature (RG-58A/U)

Coiled Microphone Cable ..... Use BELDEN No. 8497 3-Conductor,1 Shielded,for Press-to-Talk (Neoprene)
8496 3-Conductor,1 Shielded,for Press-to-Talk (Vinyl)

Ignition Noise Suppression ..... Use BELDEN No. 7300-Series Spark-Plug Sets

Bonding Strap ..... Use BELDEN No. 8661 (3/8 In.)