SAMS

PHOTOFACT®

CB RADIO SERIES

CB-52

52

MARCH 1974

CONTENTS

TRADE NAME AND MODEL	PAGE
COURIER	
Centurion	5
LAFAYETTE	
Telsat SSB-25A (99-32559W)	41
MIDLAND	
13-700 (Revised)	77
PACE	
CBST-23 (Side Talk 23)	87
REALISTIC	
TRC-35C (21-117) (Rover-1500)	119

NOTE

ONLY THOSE PERSONS PROPERLY LICENSED ARE PERMITTED TO MAKE REPAIRS OR ADJUSTMENTS WHICH MAY RESULT IN ILLEGAL OPERATION. (REFER TO FCC RULES AND REGULATIONS PART 95, SUBPARTS C & D.)

The frequency of the transmitter should be checked periodically with a secondary frequency standard to insure proper and legal operation.

Best results will be obtained when adjusting the final RF output circuit if the antenna normally used is connected and the chassis is as nearly in the cabinet as possible.

Connect either 50-ohm dummy load or the normally used antenna system.

MODEL Centurion

ALIGNMENT

Suggested Alignment Tools:

	GC ELECTRONICS
T1 thru T12, T16 thru T21	#9440
T13 thru T15, L12,L14,L15	#9089,8868
CT2 thru CT16	#5000,8290

OSC ALIGNMENT

SIGNAL GENERATOR	CHANNEL	ADJUST	REMARKS
Frequency Counter	1	CT2	Set MODE Switch to AM Connect counter to TP2. Adjust for 11.000MHz.
Frequency Counter	5	CT3	Adjust for 11.050MHz.
Frequency Counter	9	CT4	Adjust for 11.100MHz.
Frequency Counter	13	CT5	Adjust for 11.150MHz.
Frequency Counter	17	CT6	Adjust for 11.200MHz.
Frequency Counter	21	CT7	Adjust for 11.250MHz.
Frequency Counter	1	CT8	Leave MODE Switch on AM Connect counter to TP3. Adjust for 8.1665MHz.
Frequency Counter	2	CT9	Adjust for 8.1765MHz.
Frequency Counter	3	CT10	Adjust for 8.1865MHz.
Frequency Counter	4	CT11	Adjust for 8.2065MHz.
Frequency Counter	1	CT12	Set MODE Switch to LSB. Connect counter to TP3. Adjust for 8.1635MHz.
Frequency Counter	2	CT13	Adjust for 8.1735MHz.
Frequency Counter	3	CT14	Adjust for 8.1835MHz.
Frequency Counter	4	CT15	Adjust for 8.2035MHz.
Frequency Counter	Any	CT18	Connect counter to emitter of TR-21 (SSB-OSC). Adjust for 7.8015MHz.

HOWARD W. SAMS & CO., INC. Indianapolis, Indiana 46206

© 1974 Howard W Sams & Co., Inc. Printed in U. S. of America 4CY121

OSC ALIGNMENT (CONTINUED)

SIGNAL GENERATOR	CHANNEL	ADJUST	REMARKS
Frequency Counter	Any	CT17	Counter to emitter of TR-21, set MODE Switch to USB. Adjust for 7.7985MHz.
Frequency Counter	Any	CT16	Set MODE Switch to AM, Connect counter to TP7 and adjust for 7.3435MHz.

RECEIVER ALIGNMENT

Connect an AC VTVM across speaker voice coil. Set Squelch control fully CCW. Adjust volume control to obtain a suitable reading.

SIGNAL GENERATOR	CHANNEL	ADJUST	REMARKS
AM High side thru .01mfd to base of TR12 (2nd Rec.Mixer) low side to ground. Set to 455KHz (Mod.).	Any	T15,T14, T13	Adjust for maximum.
High side thru .01mfd to Antenna connector, low side to ground. Set to 27.085MHz (Mod.).	11	T3,T2,	Adjust for maximum.
SSB High side thru .01mfd to TP6 Low side to ground. Set to 7.8MHz (Unmod.) an audio beat will be produced by the SSB OSC. and the 7.8MHz IF.	Any	T16,T11 T10	MODE Switch to LSB. Adjust for maximum.

TRANSMITTER ALIGNMENT

INDICATOR	ADJUST	REMARKS
AM RF Wattmeter to antenna connector	T4,T5, T6,T7, T8,T19, T20,T21 VR17,L12 L14	Key transmitter and adjust for maximum.
0-500 mA DC Meter	L14	Insert meter in meter jumper in collector circuit of TR31. Key transmitter and readjust L14 for 5 watts DC input.
TV Set (Ch. 2)	L1	Key transmitter and adjust for MINIMUM interference.
SSB RF Wattmeter Monitor Scope	VR13	Connect wattmeter and scope to the antenna connector, set MODE switch to USB or LSB. Short microphone input to ground. Key transmitter and adjust for MINIMUM carrier (no audio).
0-50 mA DC Meter	VR18	Insert meter in meter jumper in collector of TR31. Key transmitter and adjust for MINIMUM current (no audio).
RF Wattmeter Monitor Scope	T18,VR12, L15	Remove short from microphone input and connect an audio generator in the input. Set audio level to obtain maximum without distortion. Adjust for maximum.
RF Wattmeter 0-1 Amp DC Meter	L15	Insert meter in meter jumper in collector of TR31. Key transmitter and adjust to reduce collector current until power output just begins to fall off on RF Wattmeter.
		NOTE: After SSB transmitter alignment is completed it may be necessary to readjust L12 for 5 watts AM input.

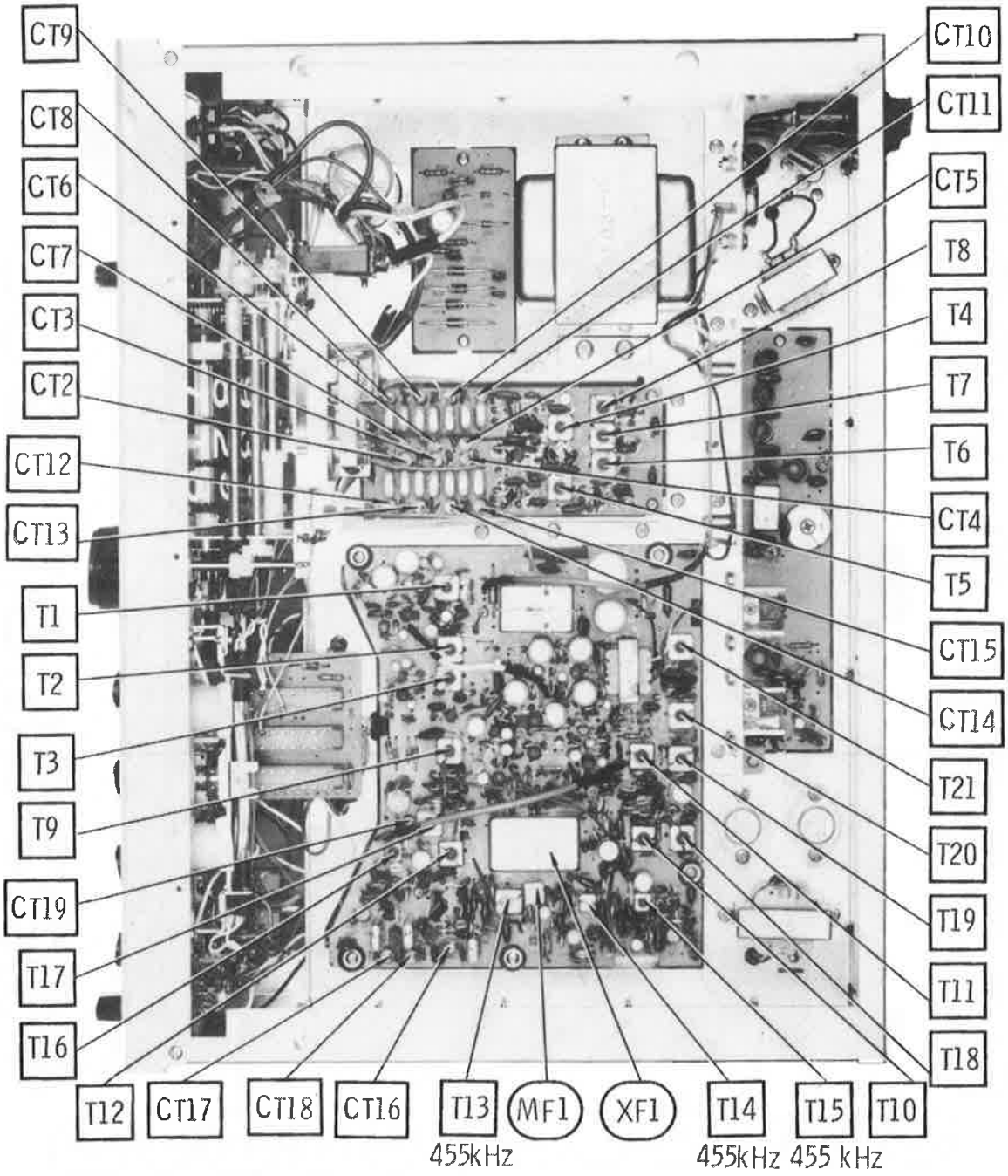
CT9
CT8
CT6
CT7
CT3
CT2
CT12
CT13
T1
T2
T3
T9
CT19
T17
T16
T12
CT17
CT18
CT16
T13
455kHz
MF1
XF1
T14
455kHz
T15
455 kHz
T10
T18
T11
T19
T20
T21
CT14
CT15
T5
CT4
T6
T7
T4
T8
CT5
CT11
CT10

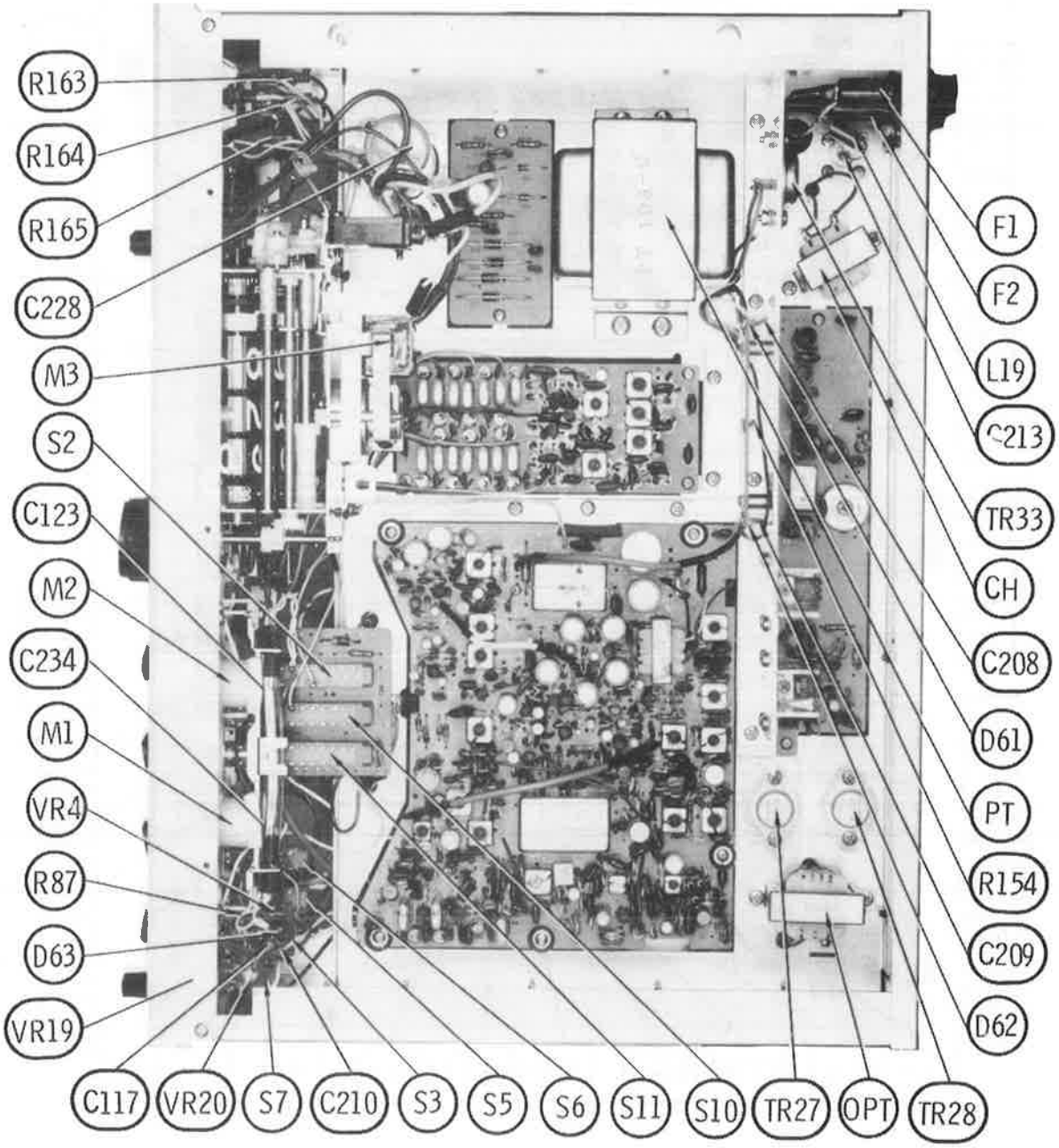
R163
R164
R165
C228
M3
S2
C123
M2
C234
M1
VR4
R87
D63
VR19
C117
VR20
S7
C210
S3
S5
S6
S11
S10
TR27
OPT
TR28
D62
C209
R154
PT
D61
C208
CH
TR33
L19
C213
F2
F1

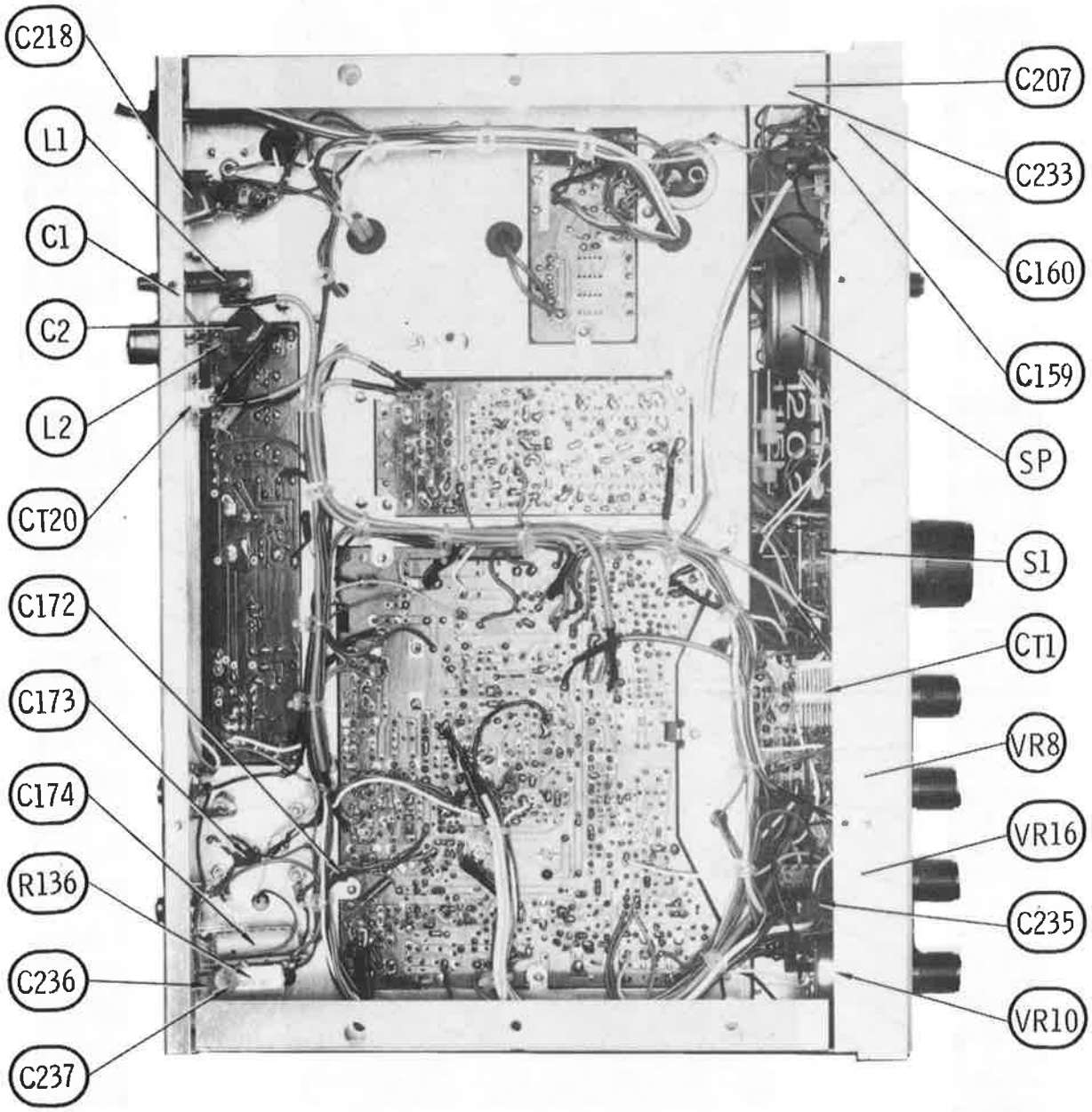
C218
L1
C1
C2
L2
CT20
C172
C173
C174
R136
C236
C237
C207
C233
C160
C159
SP
S1
CT1
VR8
VR16
C235
VR10

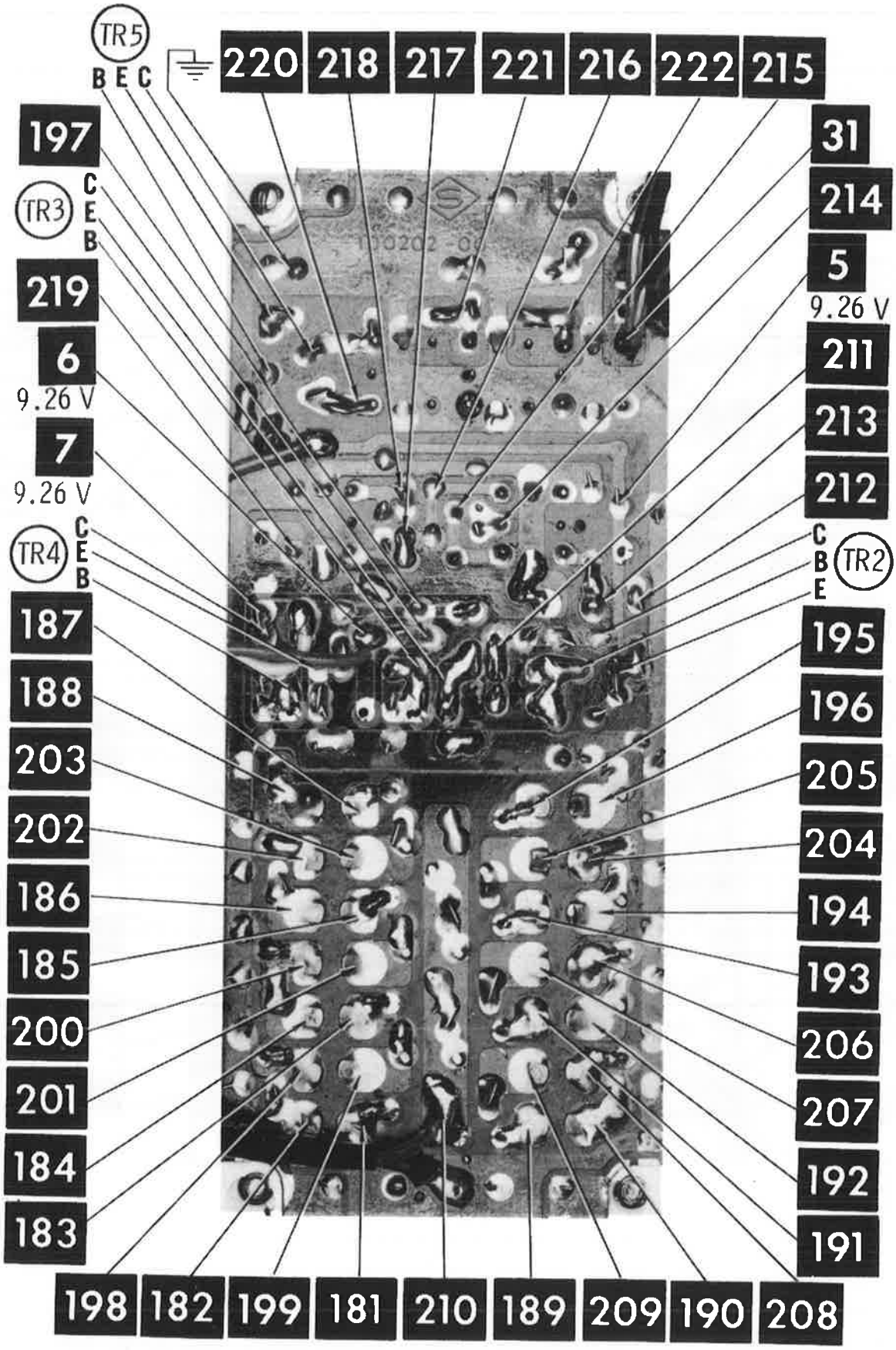

A Howard W. Sams CIRCUITRACE Photo

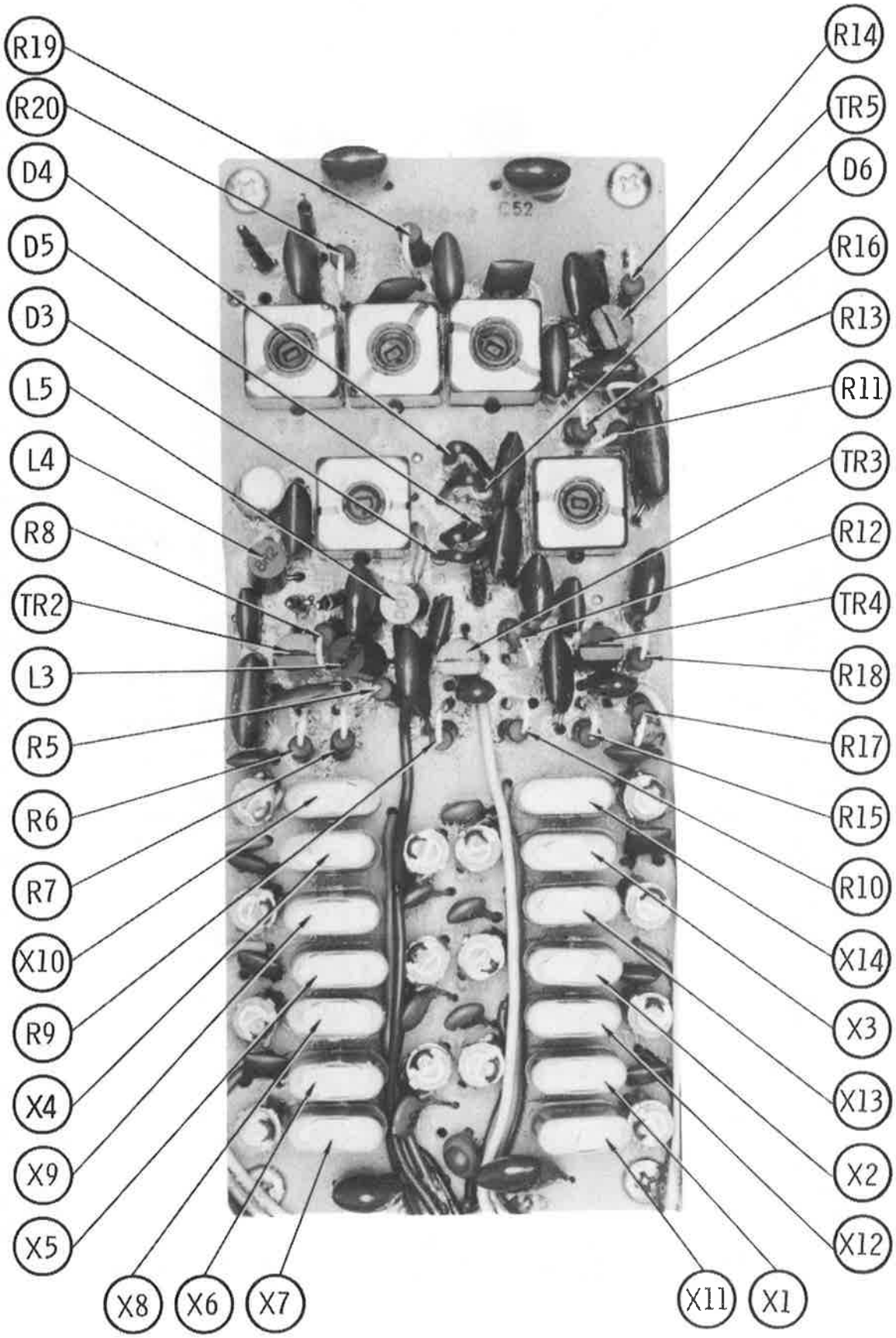
R19
R20
D4
D5
D3
L5
L4
R8
TR2
L3
R5
R6
R7
X10
R9
X4
X9
X5
X8
X6
X7
R14
TR5
D6
R16
R13
R11
TR3
R12
TR4
R18
R17
R15
R10
X14
X3
X13
X2
X12
X11
X1

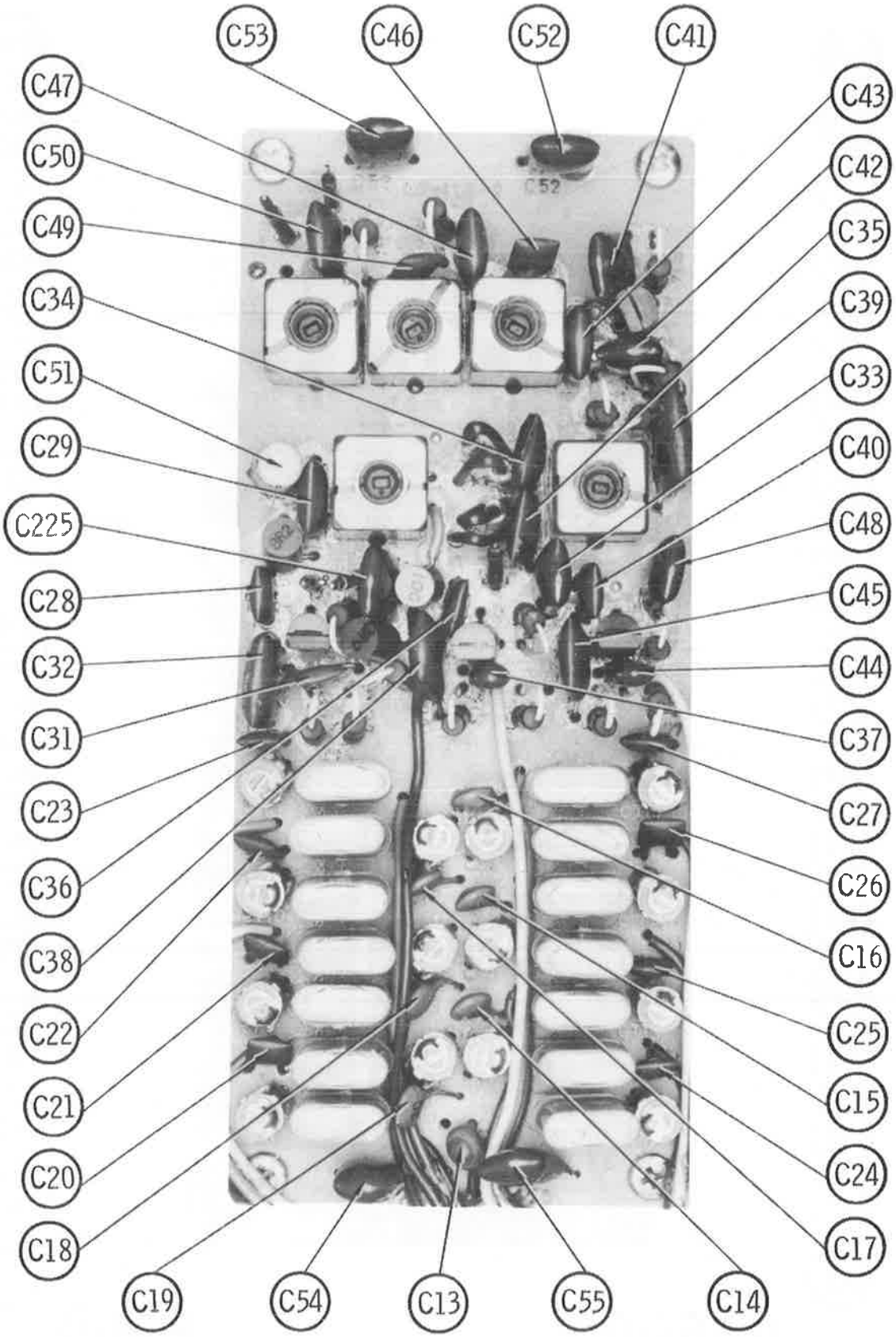
C53
C46
C52
C41
C47
C50
C49
C34
C51
C29
C225
C28
C32
C31
C23
C36
C38
C22
C21
C20
C18
C19
C54
C13
C55
C14
C17
C24
C15
C25
C16
C26
C27
C37
C44
C45
C48
C40
C33
C39
C35
C42
C43

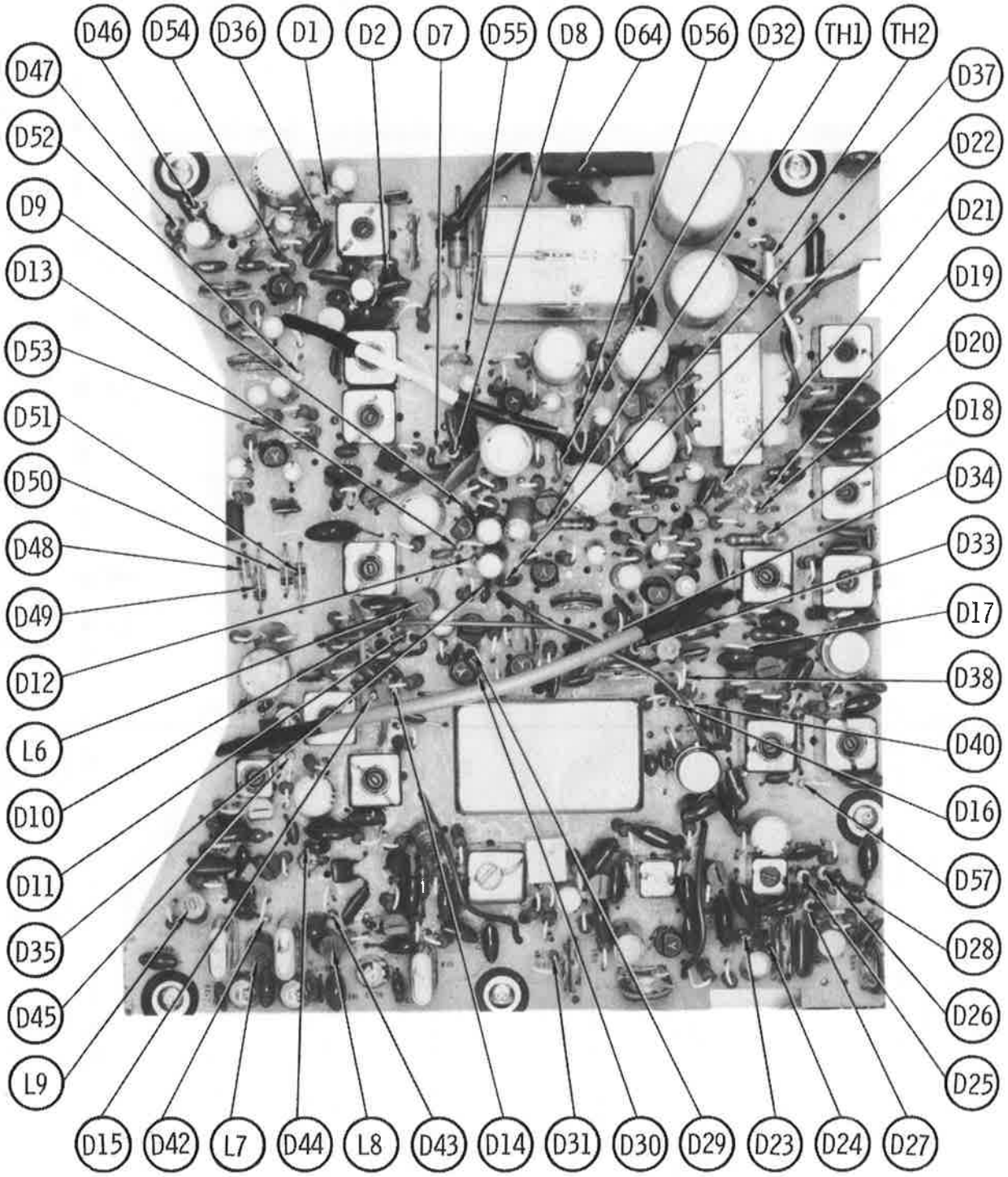
D46
D54
D36
D1
D2
D7
D55
D8
D64
D56
D32
TH1
TH2
D47
D52
D9
D13
D53
D51
D50
D48
D49
D12
L6
D10
D11
D35
D45
L9
D37
D22
D21
D19
D20
D18
D34
D33
D17
D38
D40
D16
D57
D28
D26
D25
D15
D42
L7
D44
L8
D43
D14
D31
D30
D29
D23
D24
D27

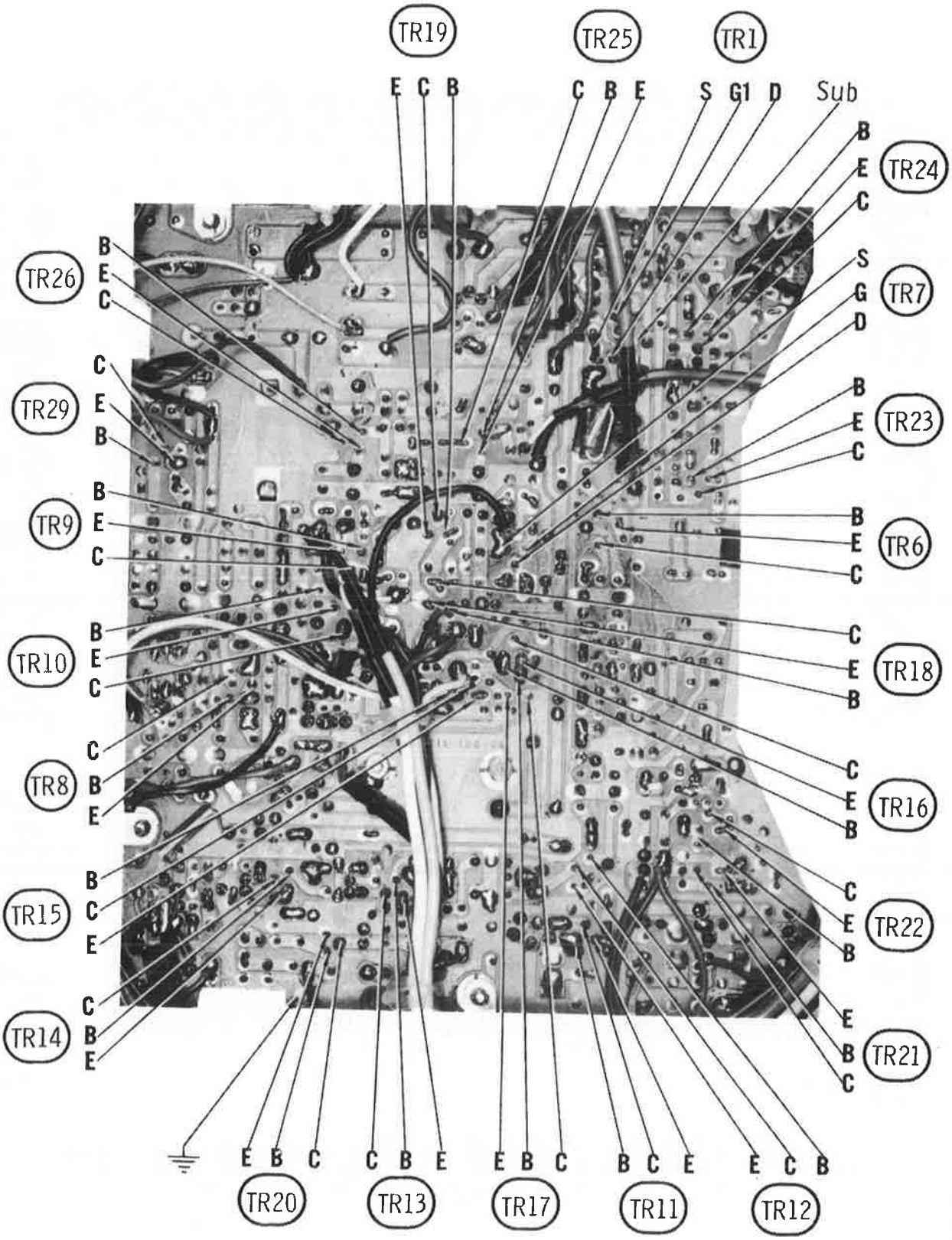
TR19
E C B
TR25
C B E
TR1
S G1 D Sub
TR24
B E C
TR7
S G D
TR23
B E C
TR6
B E C
TR18
C E B
TR16
C E B
TR22
C E B
TR21
E B C
TR26
B E C
TR29
C E B
TR9
B E C
TR10
B E C
TR8
C B E
TR15
B C E
TR14
C B E
TR20
E B C
TR13
C B E
TR17
E B C
TR11
B C E
TR12
E C B

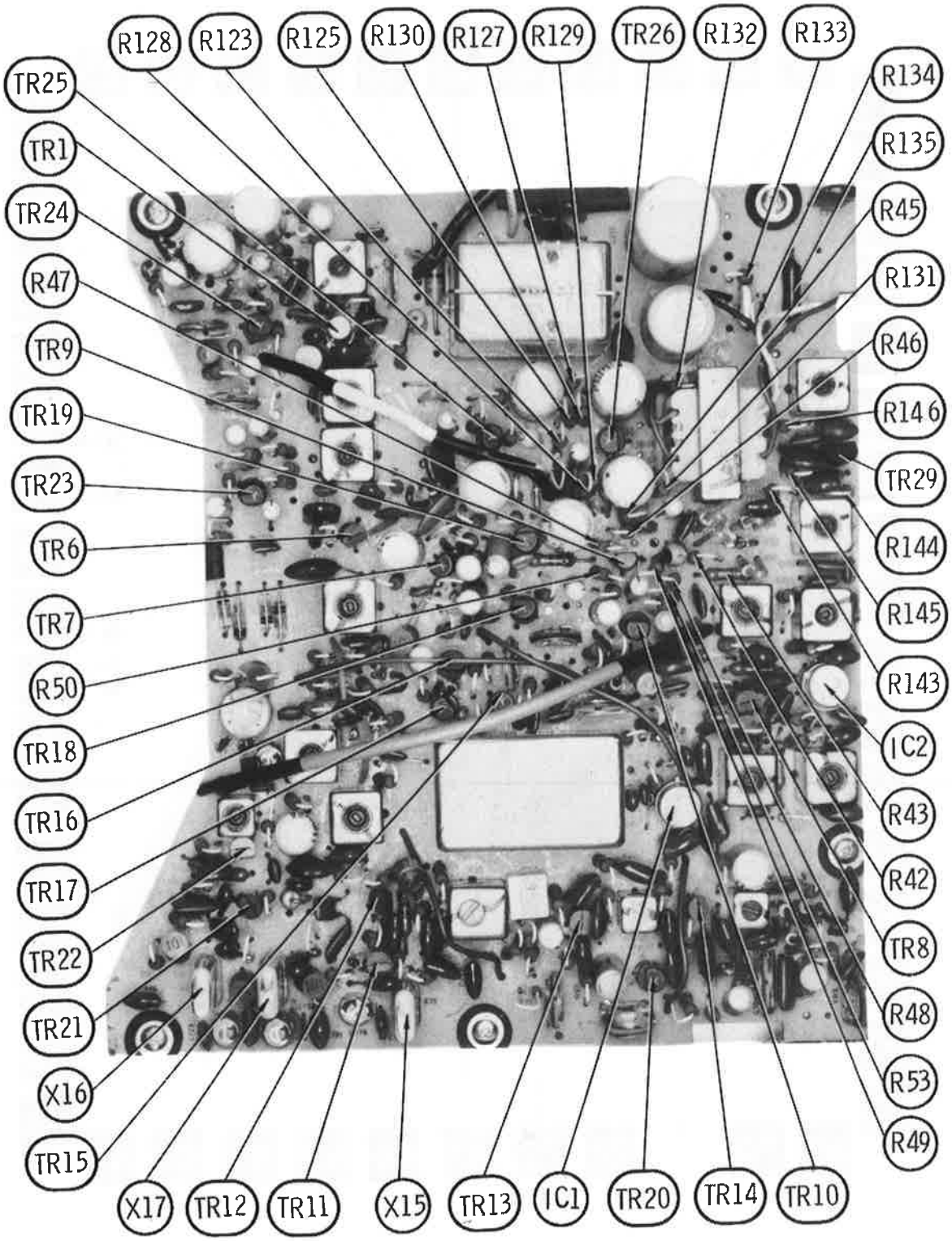
R128
R123
R125
R130
R127
R129
TR26
R132
R133
TR25
TR1
TR24
R47
TR9
TR19
TR23
TR6
TR7
R50
TR18
TR16
TR17
TR22
TR21
X16
TR15
X17
TR12
TR11
X15
TR13
IC1
TR20
TR14
TR10
R134
R135
R45
R131
R46
R146
TR29
R144
R145
R143
IC2
R43
R42
TR8
R48
R53
R49

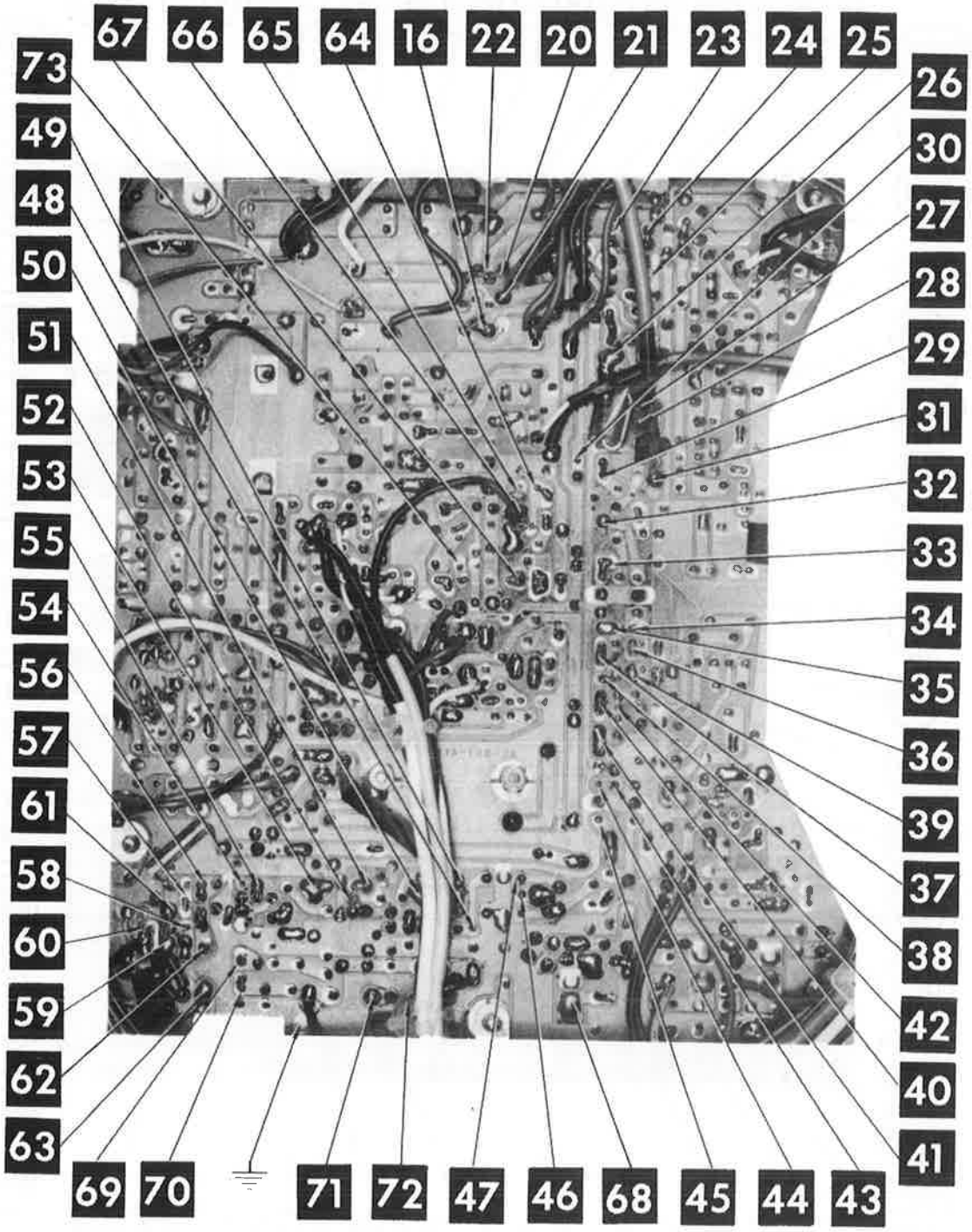

A Howard W. Sams CIRCUITRACE™ Photo

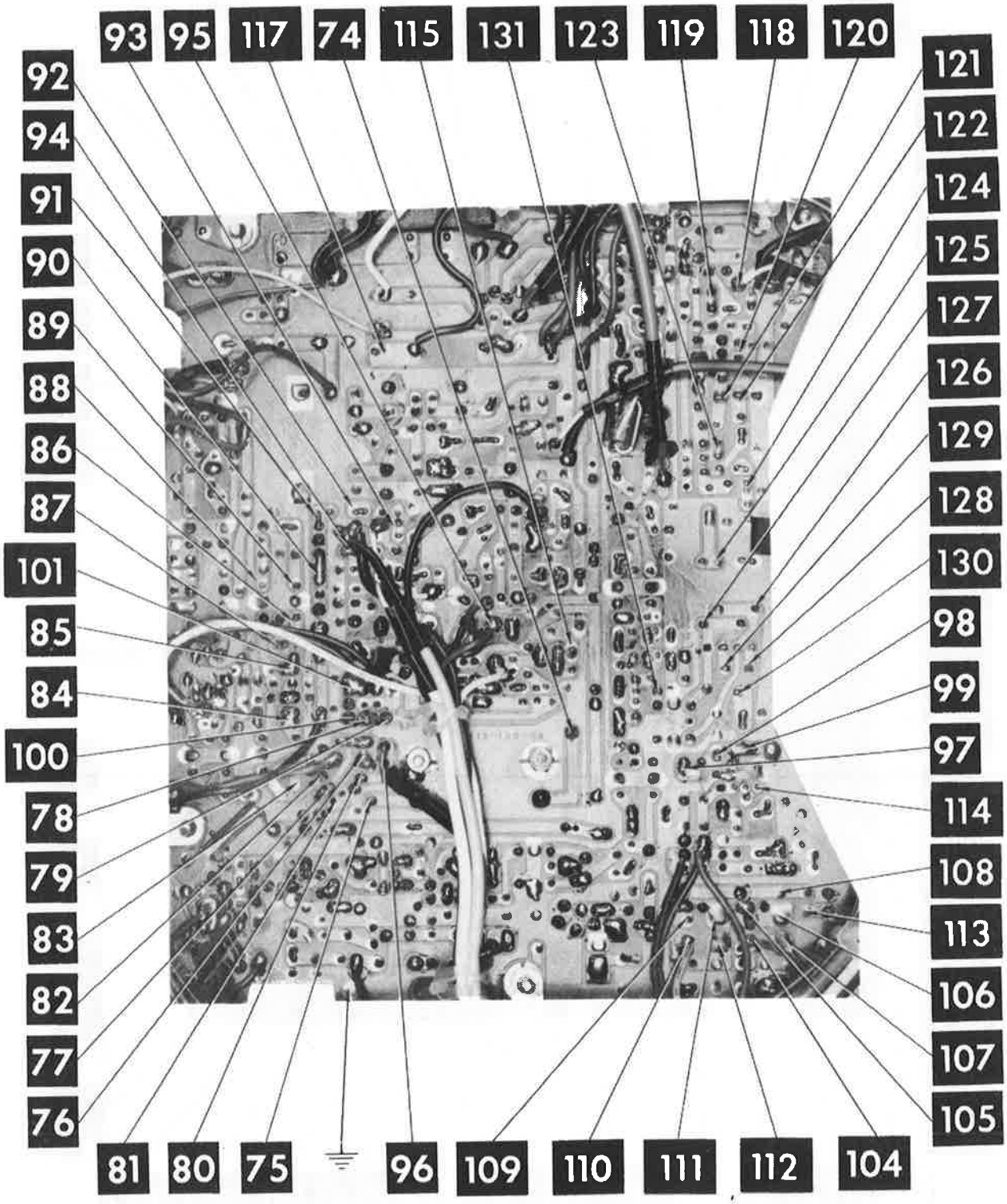

A Howard W. Sams CIRCUITRACE® Photo

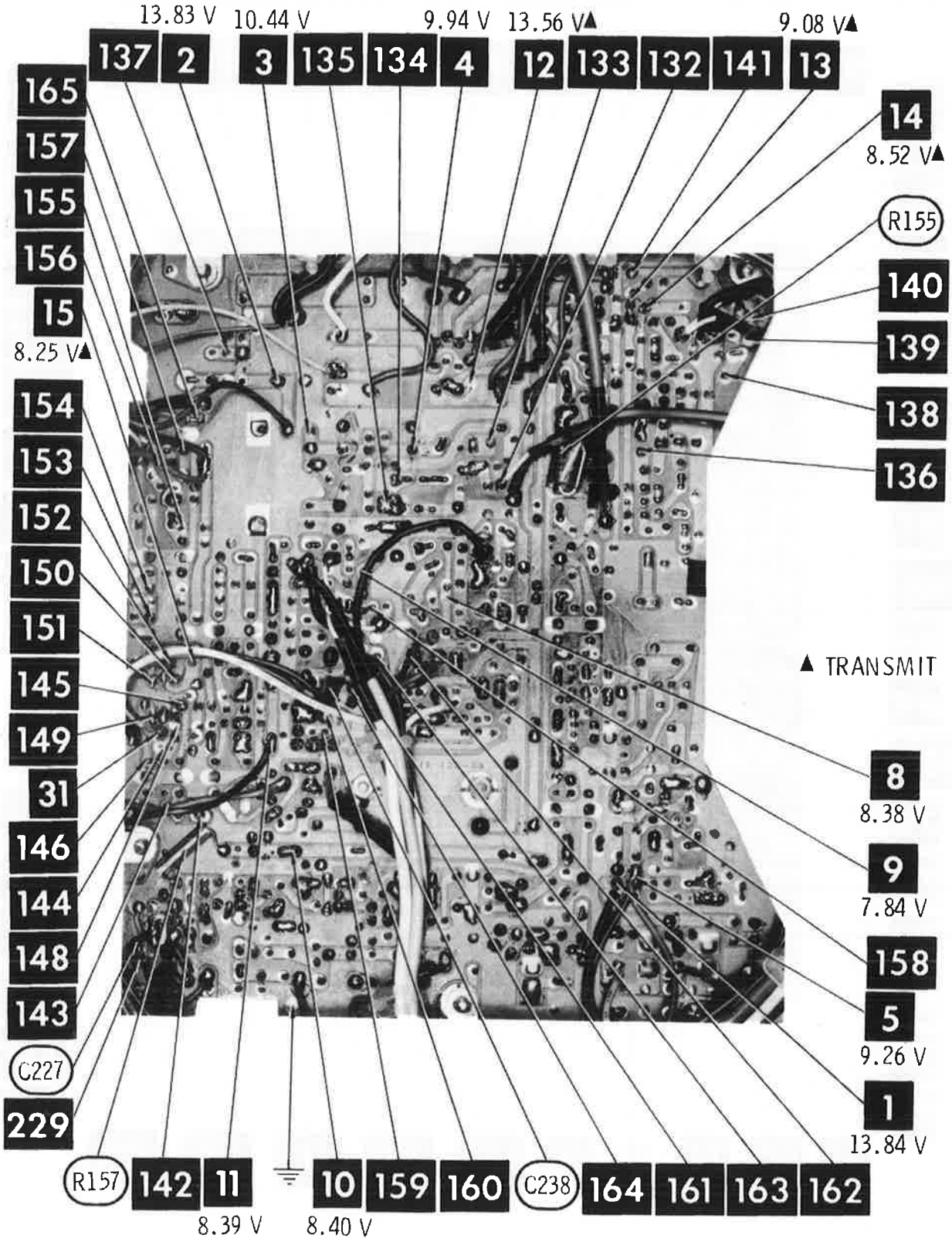

A Howard W. Sams CIRCUITRACE® Photo

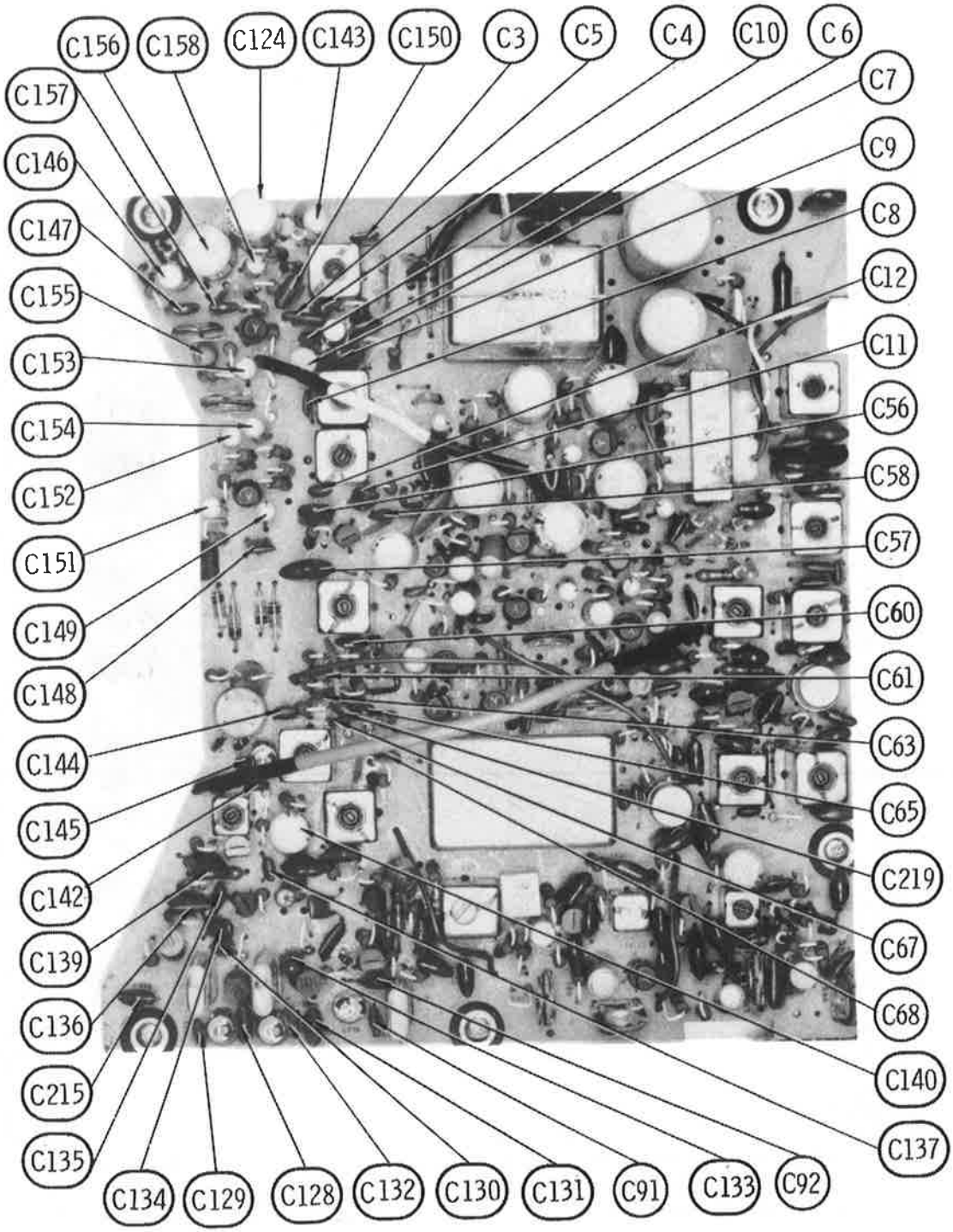
C156
C158
C124
C143
C150
C3
C5
C4
C10
C6
C7
C9
C8
C12
C11
C56
C58
C57
C60
C61
C63
C65
C219
C67
C68
C140
C137
C92
C133
C91
C131
C130
C132
C128
C129
C134
C135
C215
C136
C139
C142
C145
C144
C148
C149
C151
C152
C154
C153
C155
C147
C146
C157

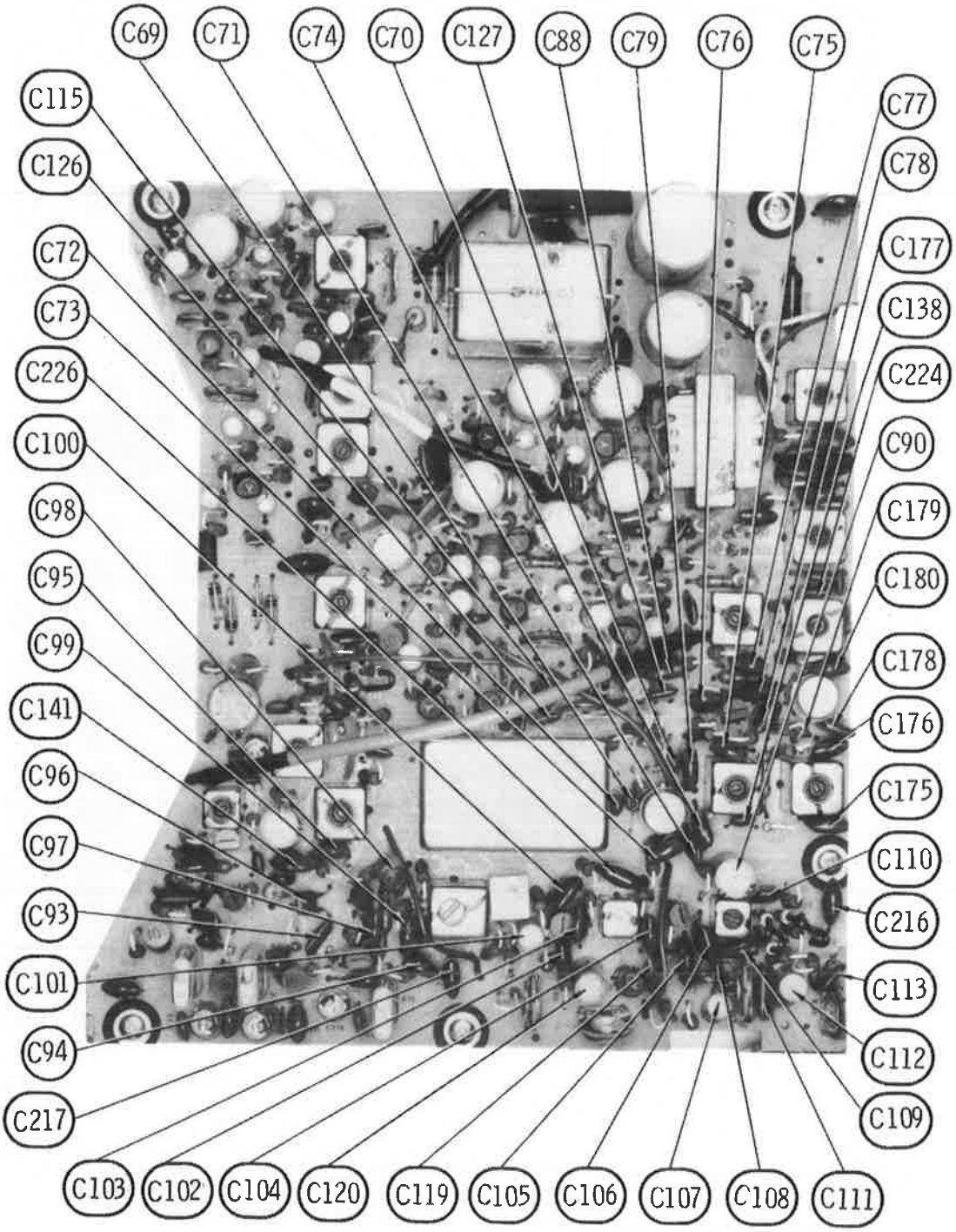
C69
C71
C74
C70
C127
C88
C79
C76
C75
C115
C126
C72
C73
C226
C100
C98
C95
C99
C141
C96
C97
C93
C101
C94
C217
C103
C102
C104
C120
C119
C105
C106
C107
C108
C111
C109
C112
C113
C216
C110
C175
C176
C178
C180
C179
C90
C224
C138
C177
C78
C77

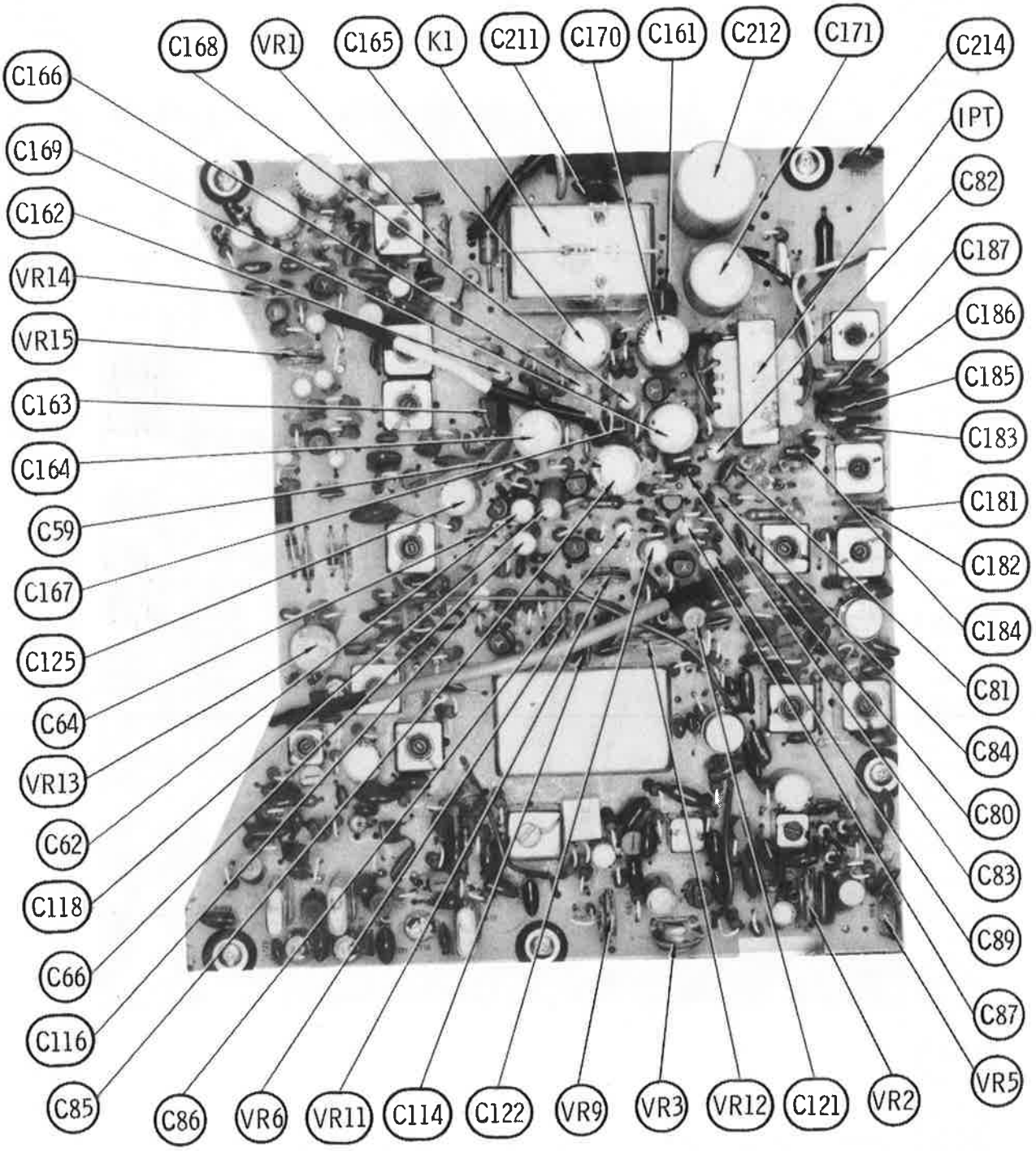
C168
VR1
C165
K1
C211
C170
C161
C212
C171
C214
C166
IPT
C169
C82
C162
C187
VR14
C186
VR15
C185
C163
C183
C164
C181
C59
C182
C167
C184
C125
C81
C64
C84
VR13
C80
C62
C83
C118
C89
C66
C87
C116
VR5
C85
C86
VR6
VR11
C114
C122
VR9
VR3
VR12
C121
VR2

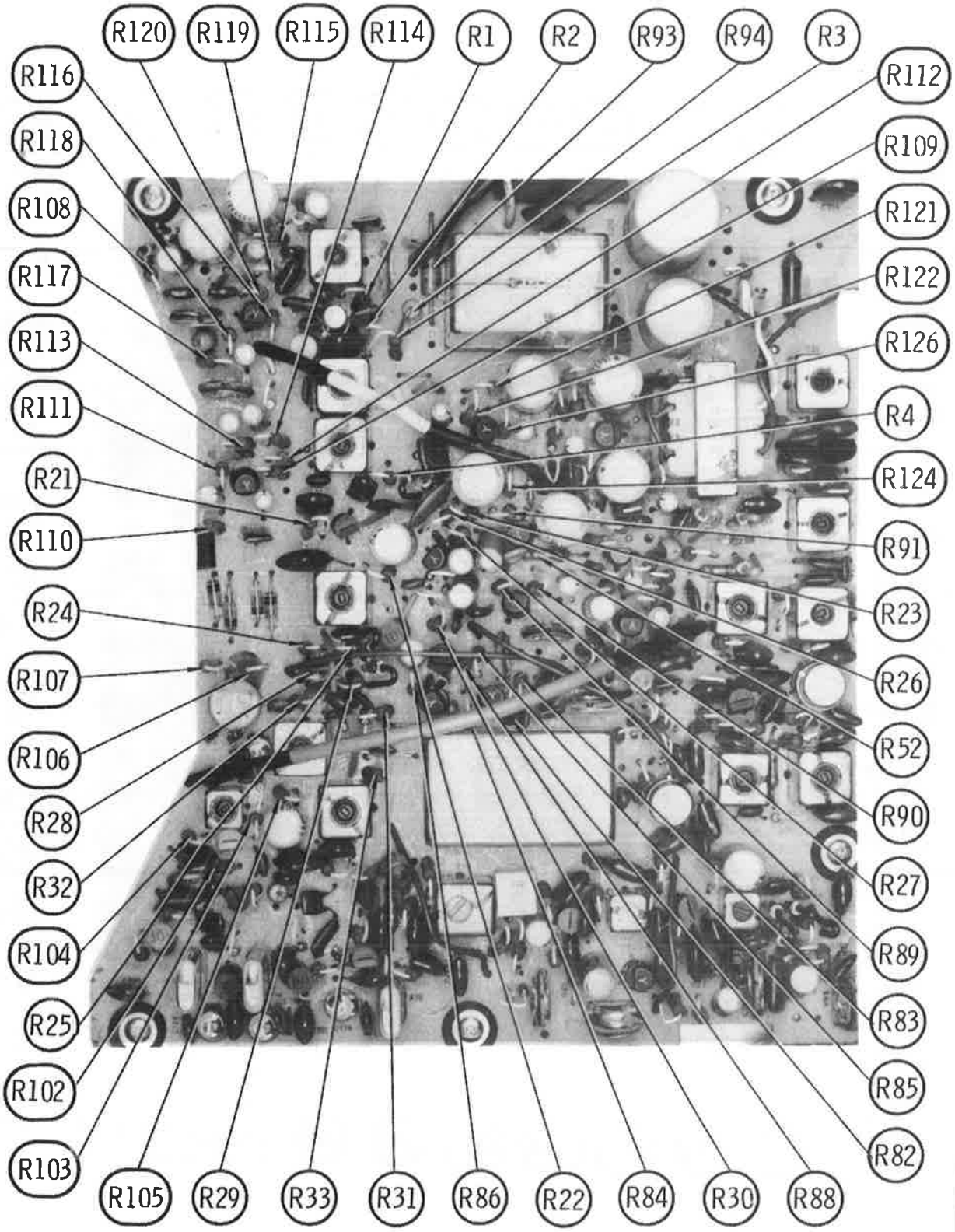
R120
R119
R115
R114
R1
R2
R93
R94
R3
R116
R118
R108
R117
R113
R111
R21
R110
R24
R107
R106
R28
R32
R104
R25
R102
R103
R105
R29
R33
R31
R86
R22
R84
R30
R88
R112
R109
R121
R122
R126
R4
R124
R91
R23
R26
R52
R90
R27
R89
R83
R85
R82

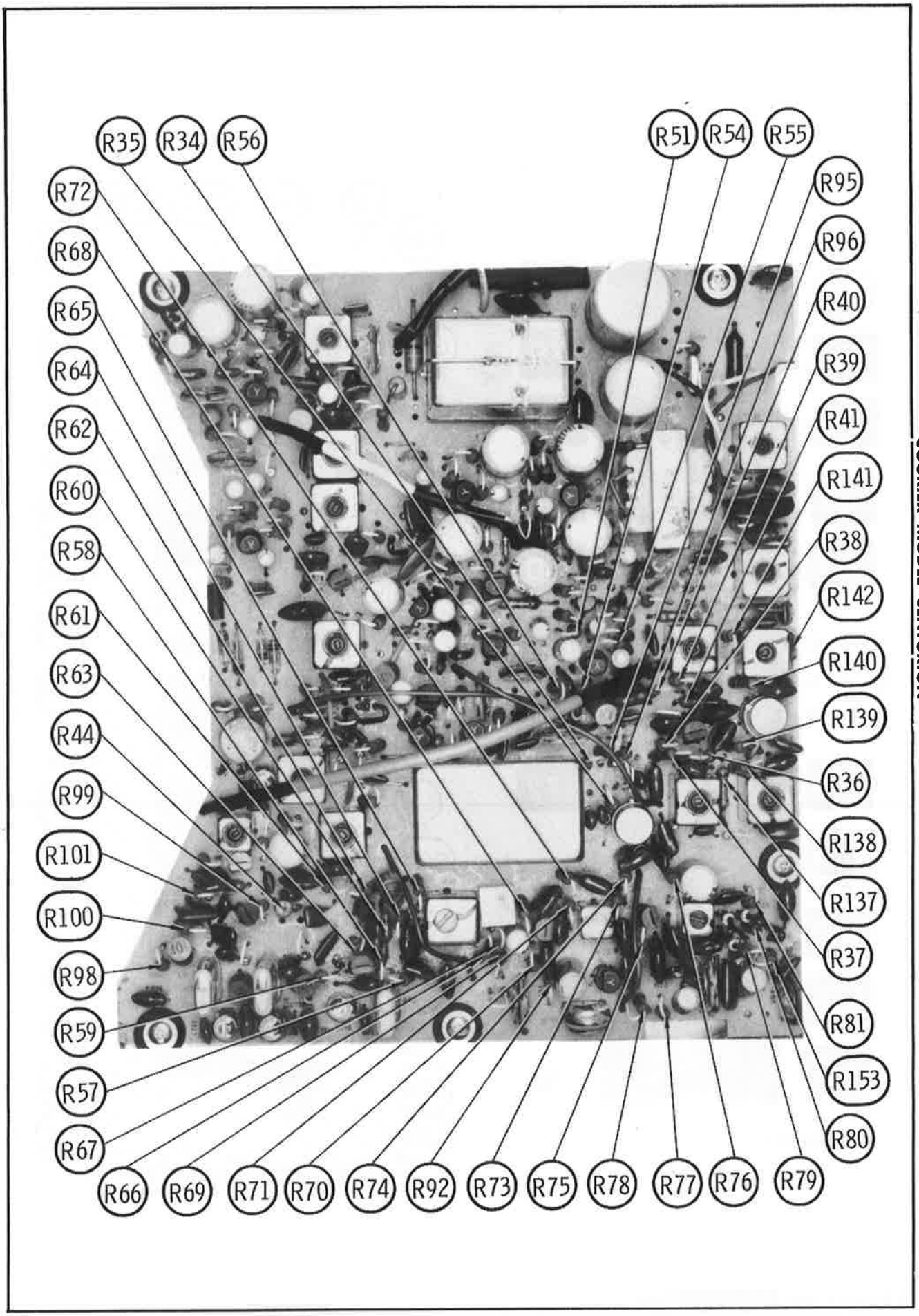
R35
R34
R56
R51
R54
R55
R72
R95
R68
R96
R65
R40
R64
R39
R62
R41
R60
R141
R58
R38
R61
R142
R63
R140
R44
R139
R99
R36
R101
R138
R100
R137
R98
R37
R59
R81
R57
R153
R67
R80
R66
R69
R71
R70
R74
R92
R73
R75
R78
R77
R76
R79

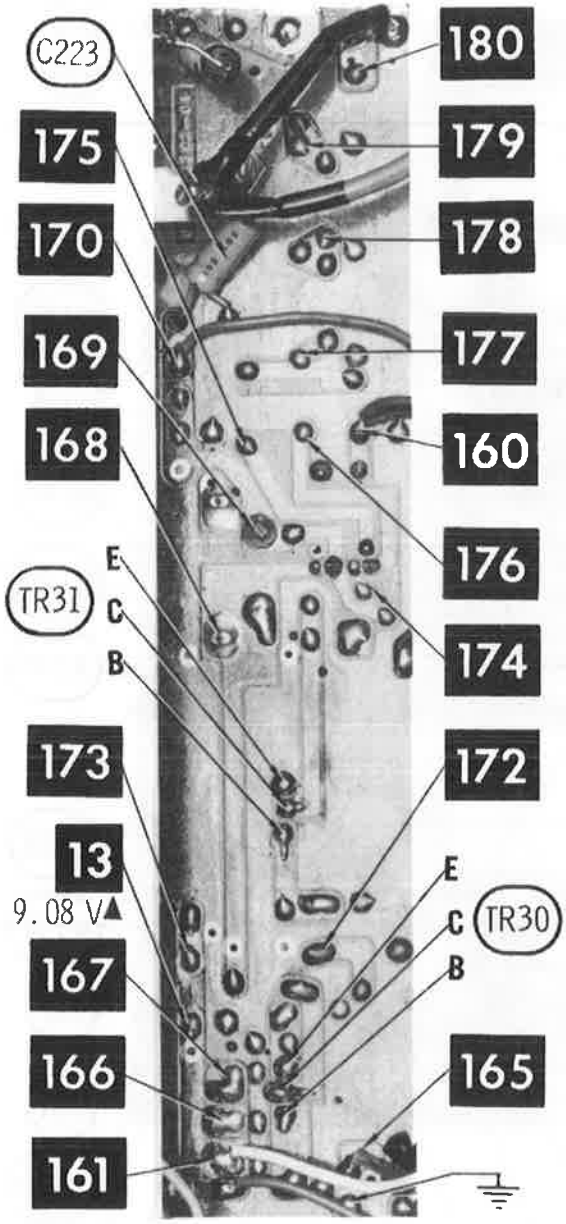

▲ TRANSMIT

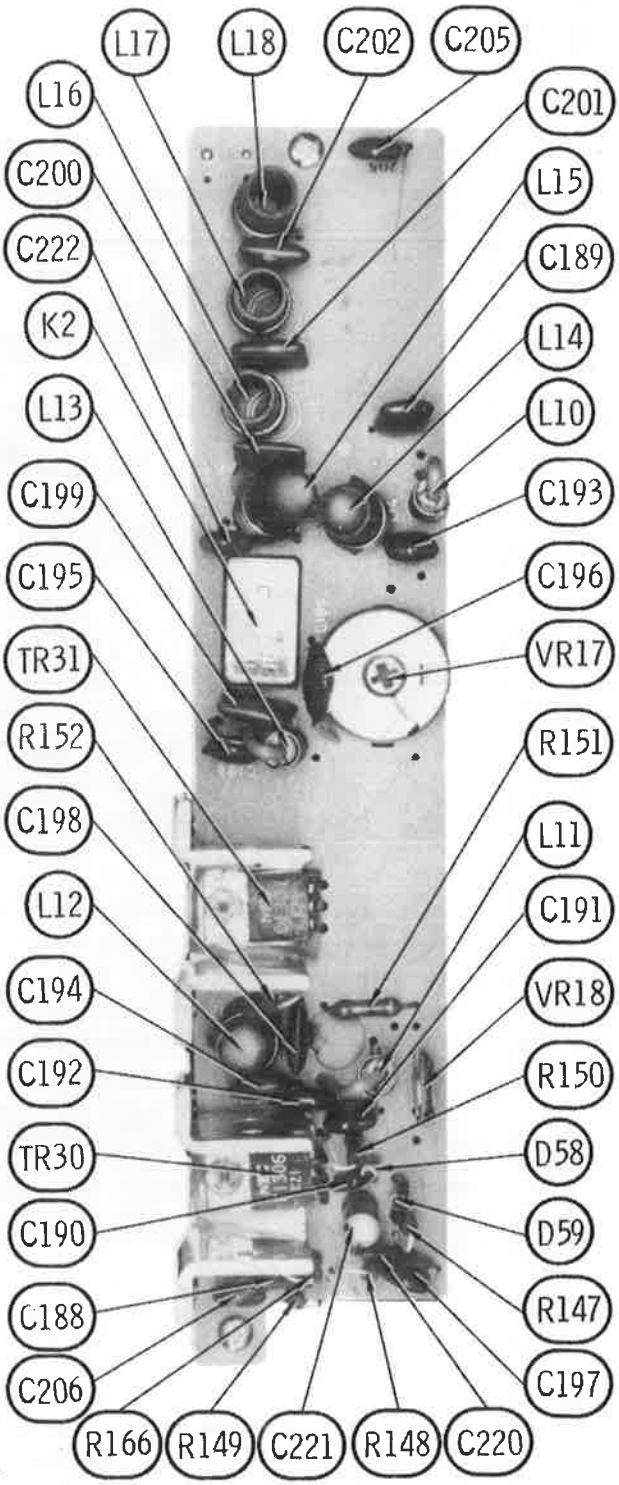

A Howard W. Sams CIRCUITRACE® Photo

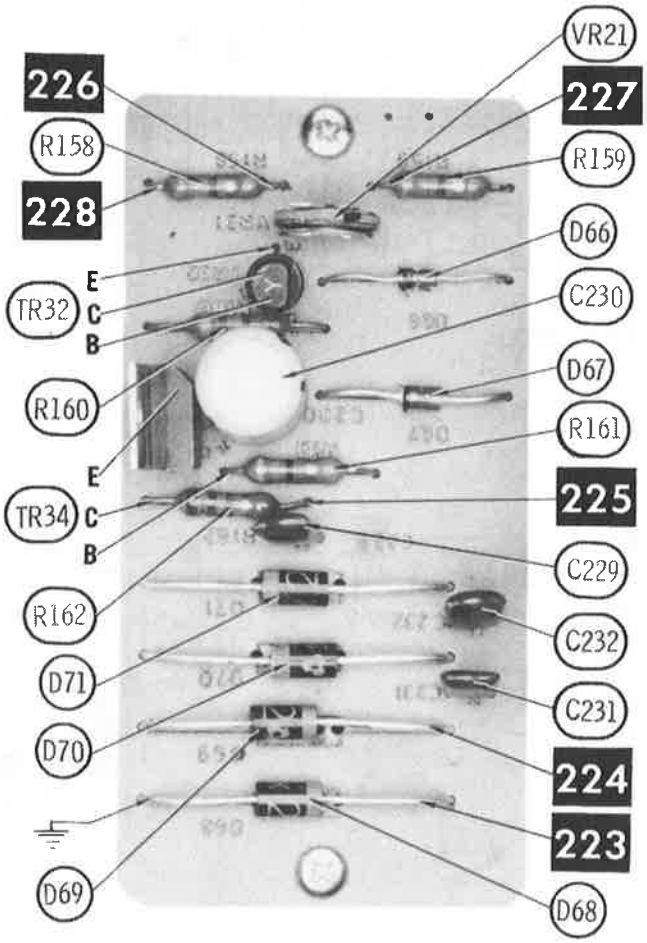

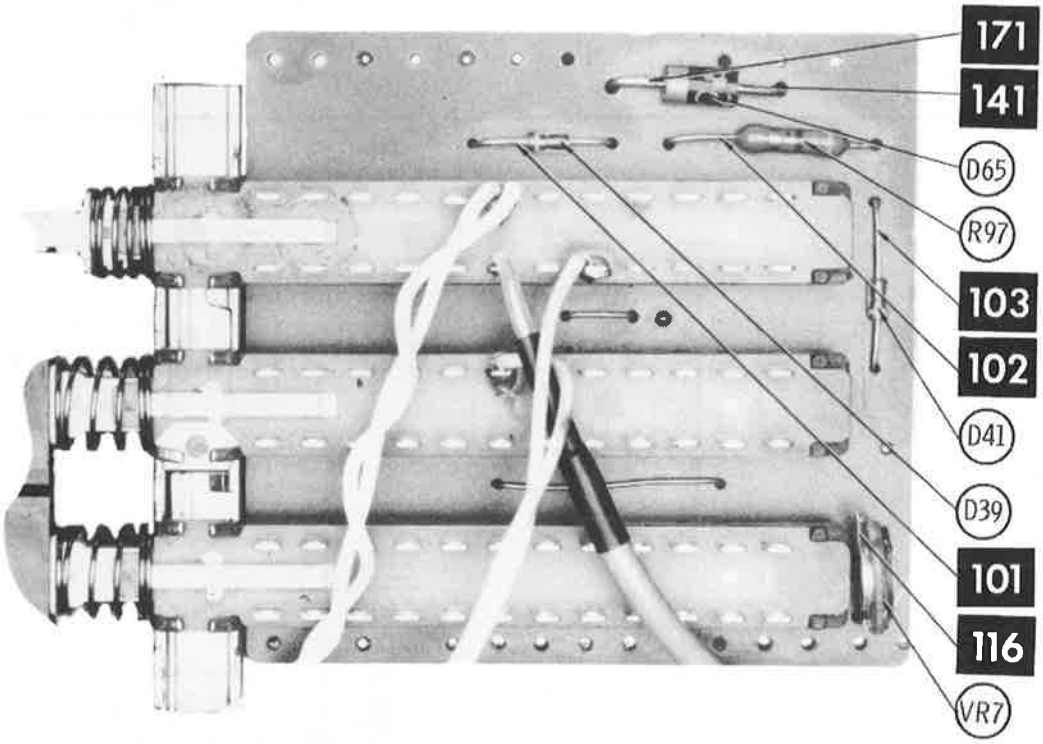

A Howard W. Sams CIRCUITRACE Photo

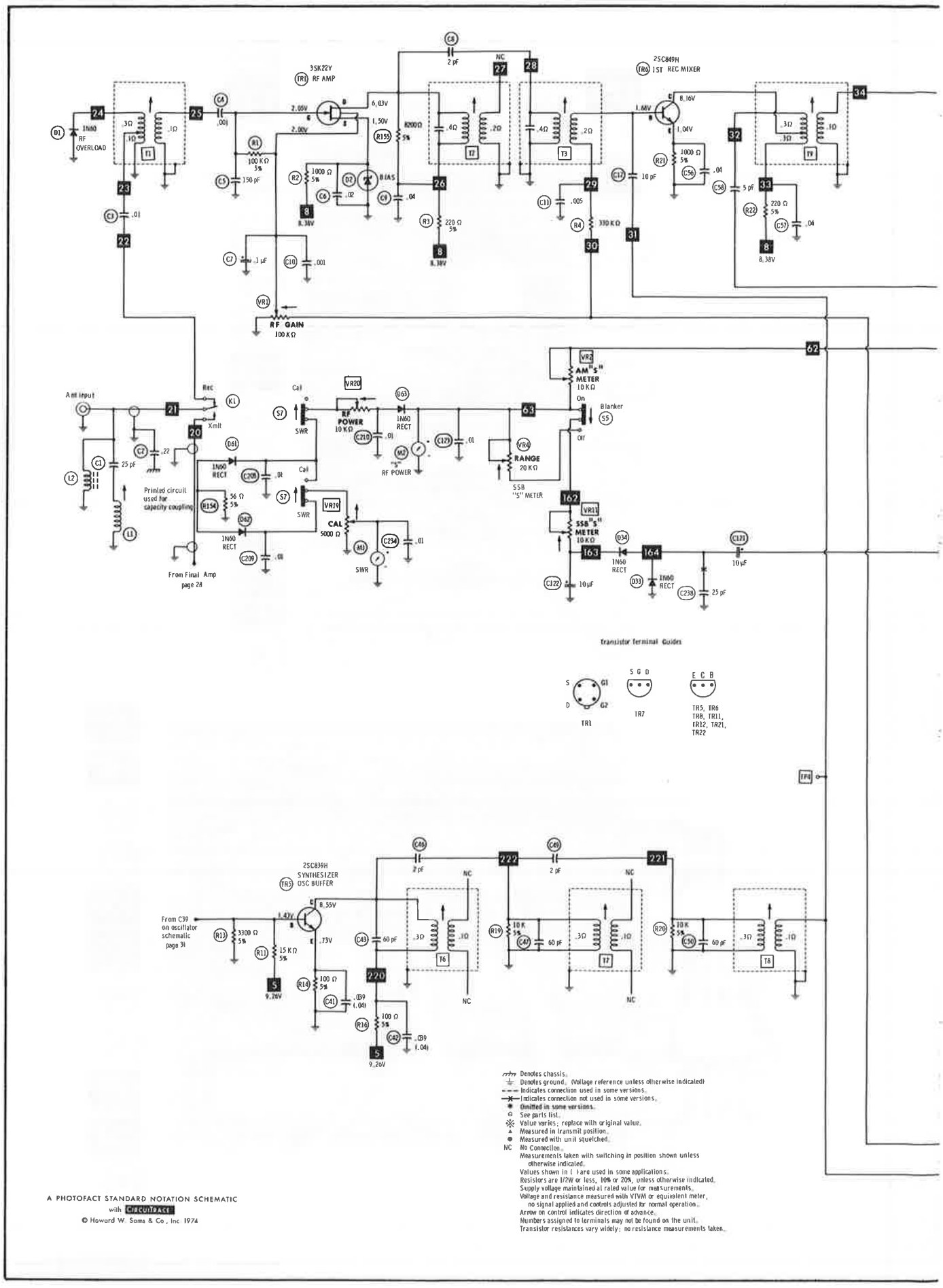

A PHOTOFACT STANDARD NOTATION SCHEMATIC
with CIRCUITRACE

© Howard W. Sams & Co., Inc. 1974

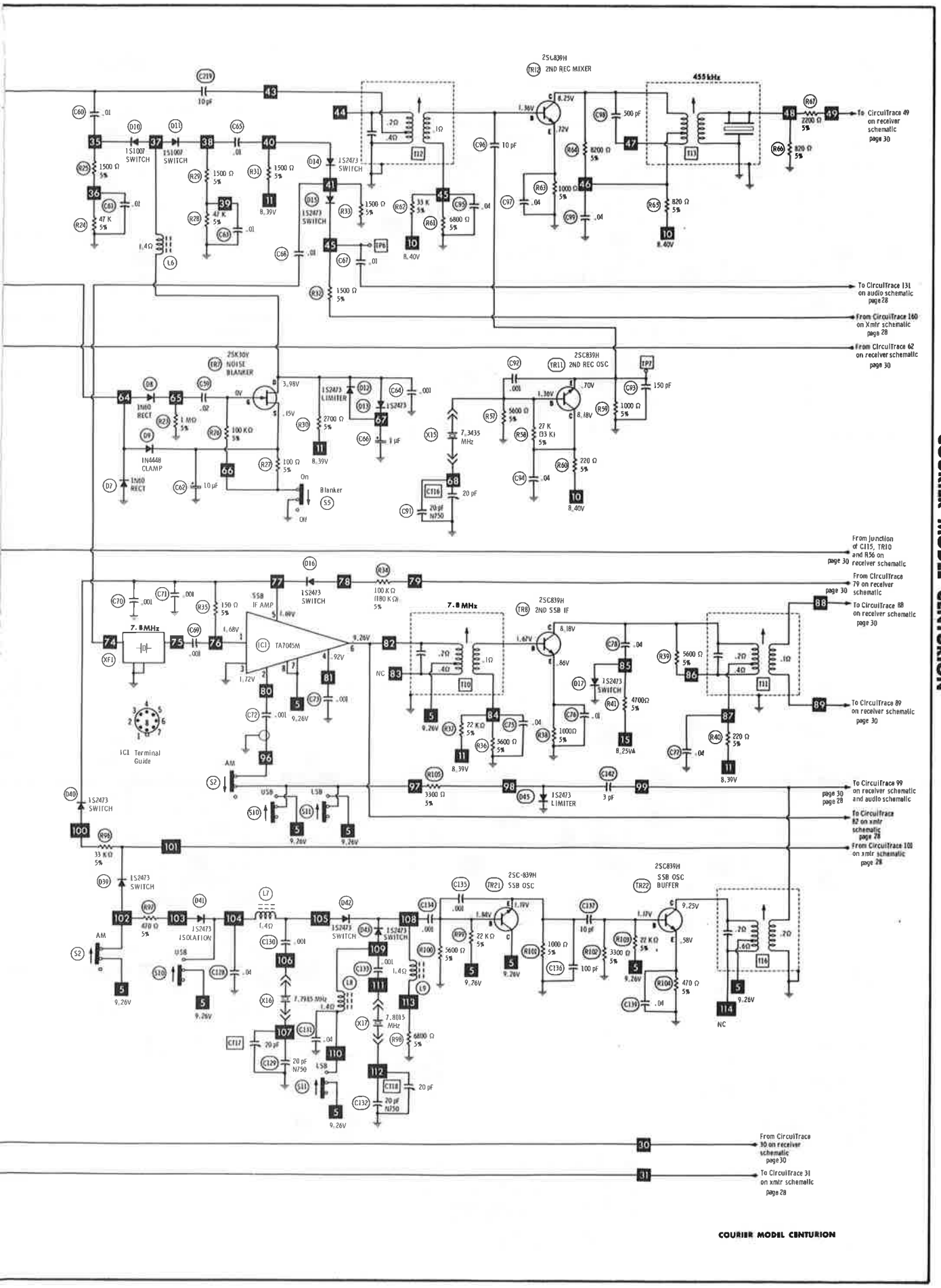

COURIER MODEL CENTURION

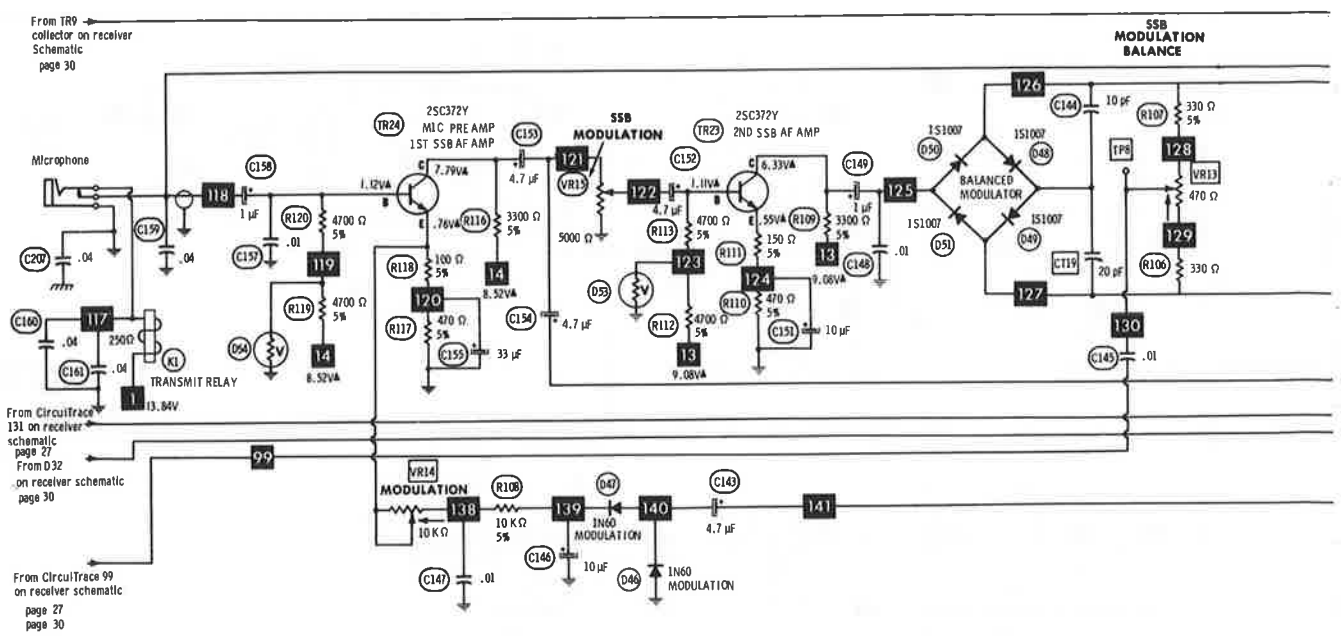

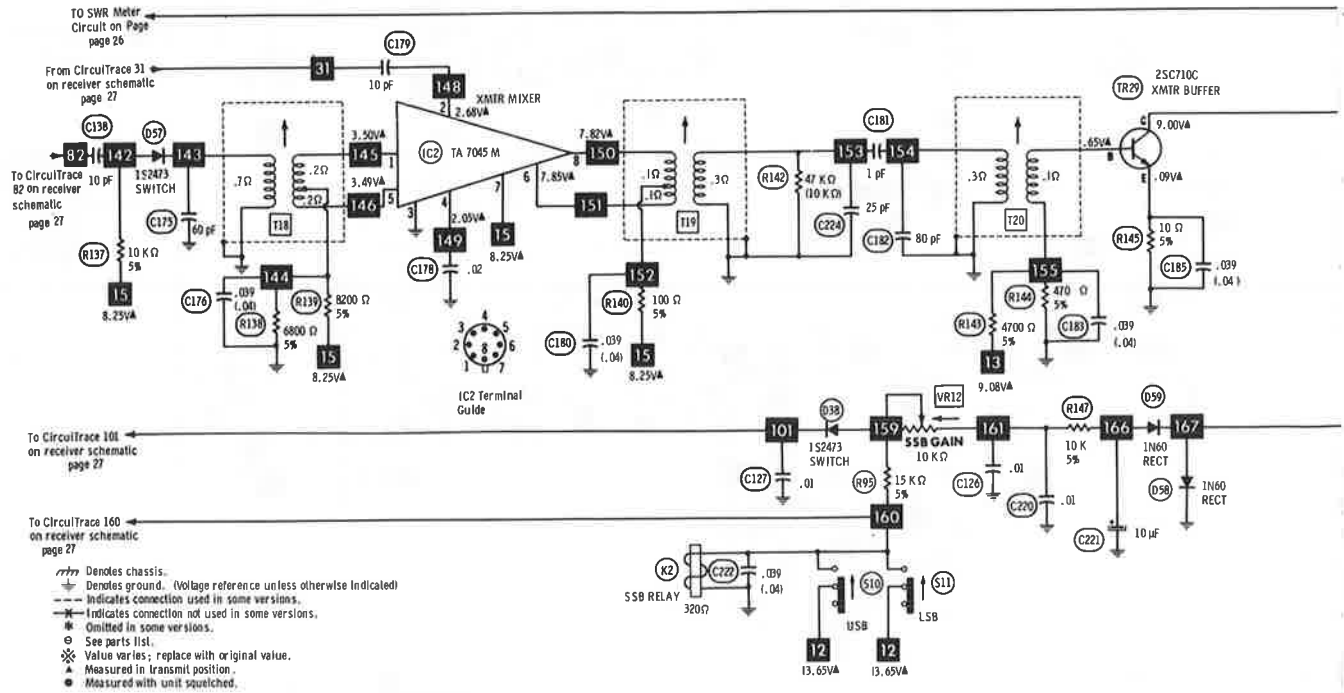

Denotes chassis.
Denotes ground. (Voltage reference unless otherwise indicated)
Indicates connection used in some versions.
Indicates connection not used in some versions.
Omitted in some versions.
See parts list.
Value varies; replace with original value.
Measured in transmit position.
Measured with unit squelched.

NC No Connection.
Measurements taken with switching in position shown unless otherwise indicated.
Values shown in ( ) are used in some applications.
Resistors are 1/2W or less, 10% or 20%, unless otherwise indicated.
Supply voltage maintained at rated value for measurements.
Voltage and resistance measured with VTVM or equivalent meter, no signal applied and controls adjusted for normal operation.
Arrow on control indicates direction of advance.
Numbers assigned to terminals may not be found on the unit.
Transistor resistances vary widely; no resistance measurements taken.

A PHOTOFACT STANDARD NOTATION SCHEMATIC with CIRCUITRACE

© Howard W. Sams & Co., Inc. 1974

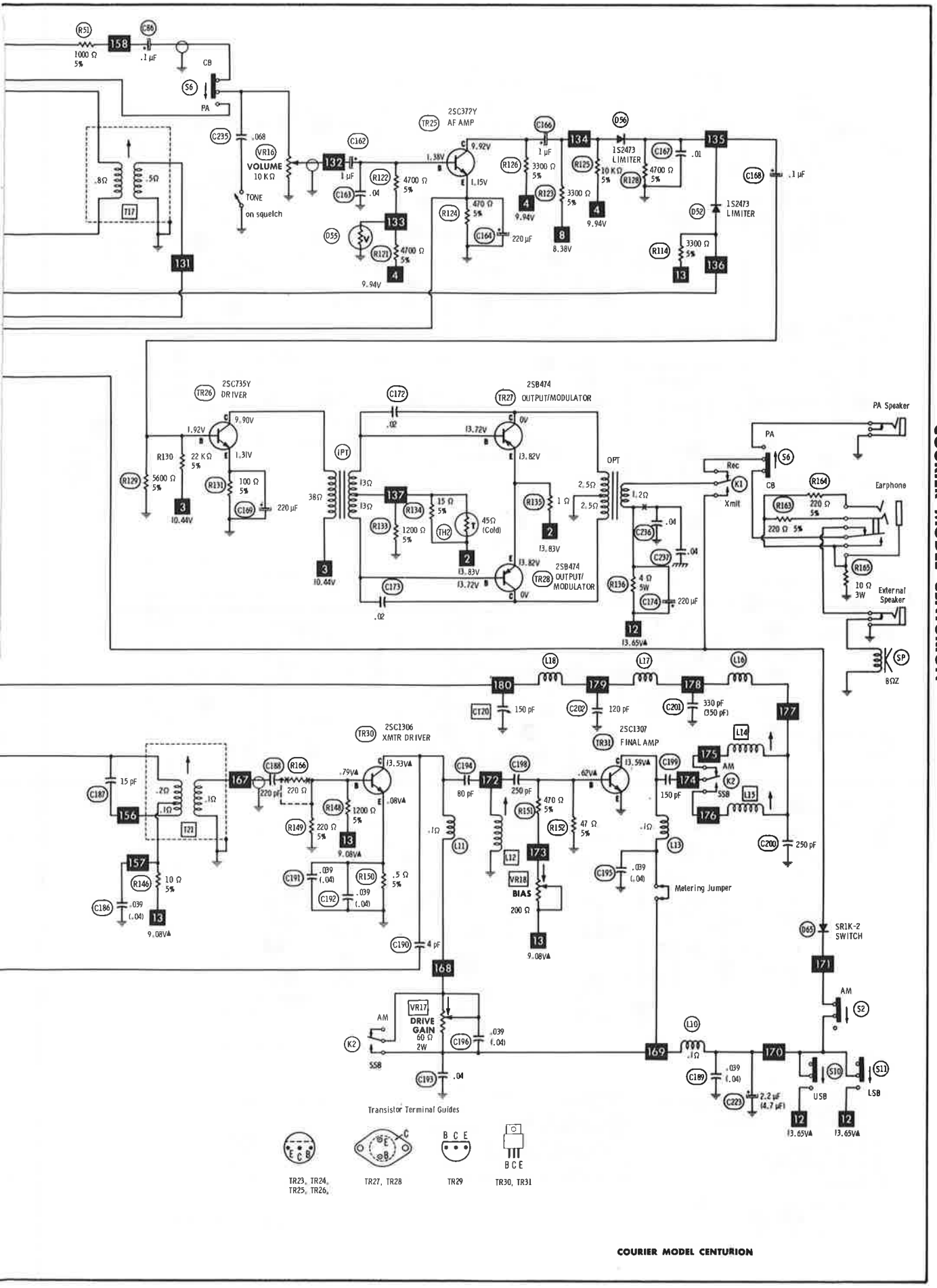

COURIER MODEL CENTURION

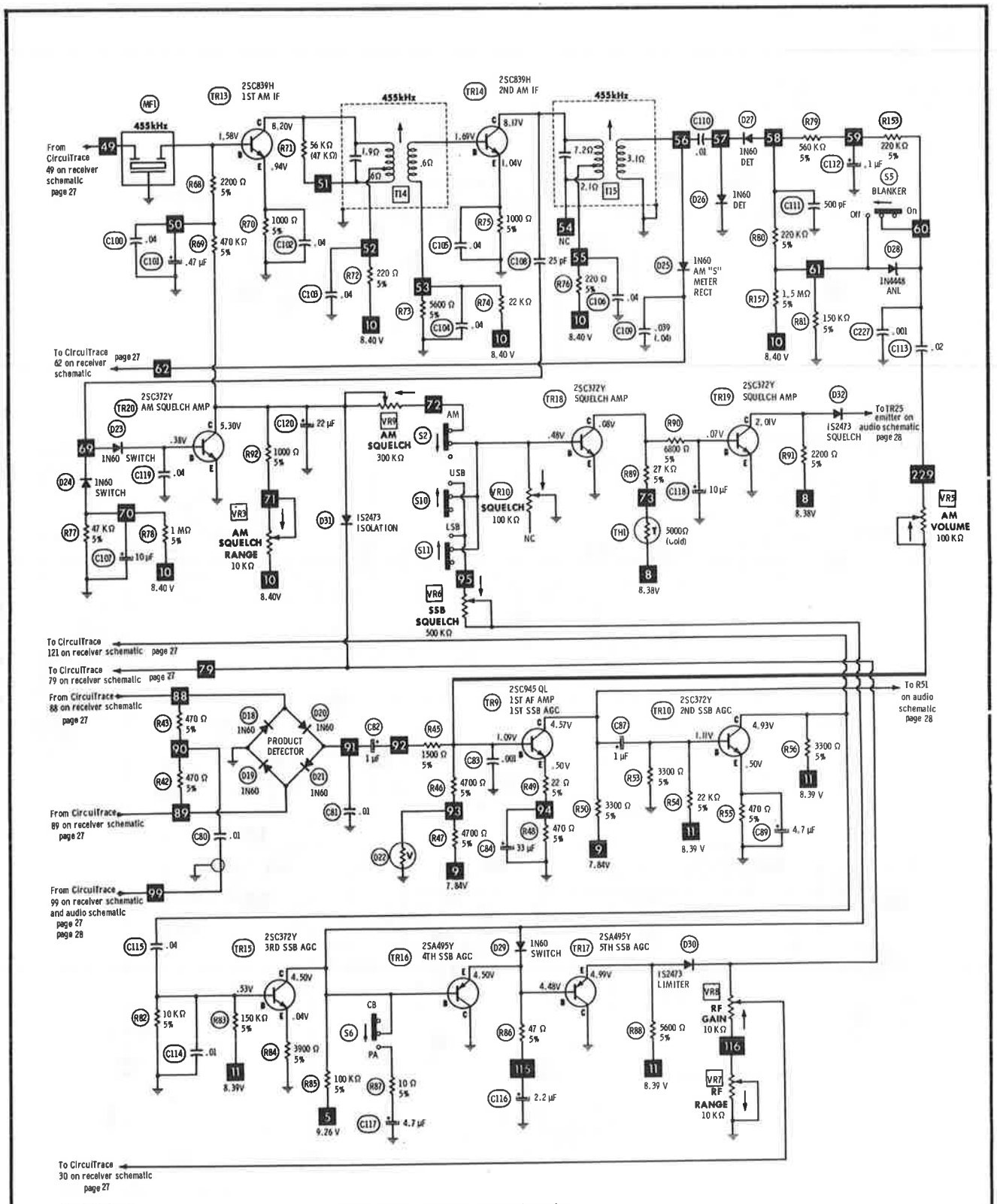

Denotes chassis.
Denotes ground. (Voltage reference unless otherwise indicated)
Indicates connection used in some versions.
Indicates connection not used in some versions.
Omitted in some versions.
See parts list.
Value varies; replace with original value.
Measured in transmit position.
Measured with unit squelched.
NC No Connection.

Measurements taken with switching in position shown unless otherwise indicated.
Values shown in Ω are used in some applications.
Resistors are 1/2W or less, 10% or 20%, unless otherwise indicated.
Supply voltage maintained at rated value for measurements.
Voltage and resistance measured with VTVM or equivalent meter, no signal applied and controls adjusted for normal operation.
Arrow on control indicates direction of advance.
Numbers assigned to terminals may not be found on the unit.
Transistor resistances vary widely; no resistance measurements taken.

Transistor Terminal Guides

TR10, TR15, TR16, TR17, TR18, TR19,

TR9, TR13, TR14

A PHOTOFACT STANDARD NOTATION SCHEMATIC with CIRCUITRACE

© Howard W. Sams & Co., Inc. 1974

COURIER MODEL CENTURION

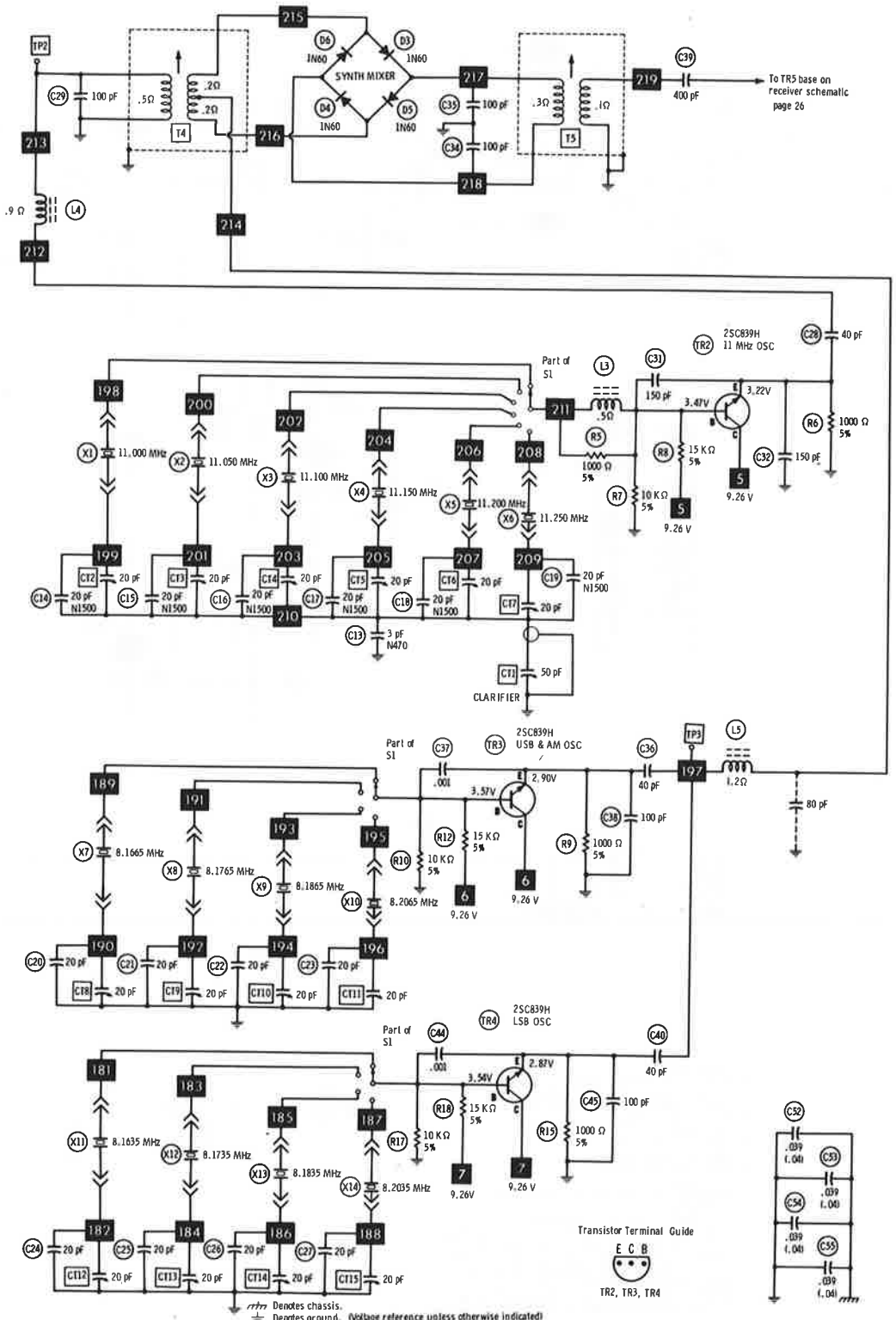

Denotes chassis.
Denotes ground. (Voltage reference unless otherwise indicated)
Indicates connection used in some versions.
Indicates connection not used in some versions.
Omitted in some versions.
See parts list.
Value varies; replace with original value.
Measured in transmit position.
Measured with unit squelched.
NC No Connection.

Measurements taken with switching in position shown unless otherwise indicated.
Values shown in ( ) are used in some applications.
Resistors are 1/2W or less, 10% or 20%, unless otherwise indicated.
Supply voltage maintained at rated value for measurements.
Voltage and resistance measured with VTVM or equivalent meter, no signal applied and controls adjusted for normal operation.
Arrow on control indicates direction of advance.
Numbers assigned to terminals may not be found on the unit.
Transistor resistances vary widely; no resistance measurements taken.

A PHOTOFACT STANDARD NOTATION SCHEMATIC
with CIRCUITRACE

© Howard W. Sams & Co., Inc. 1974

COURIER MODEL CENTURION

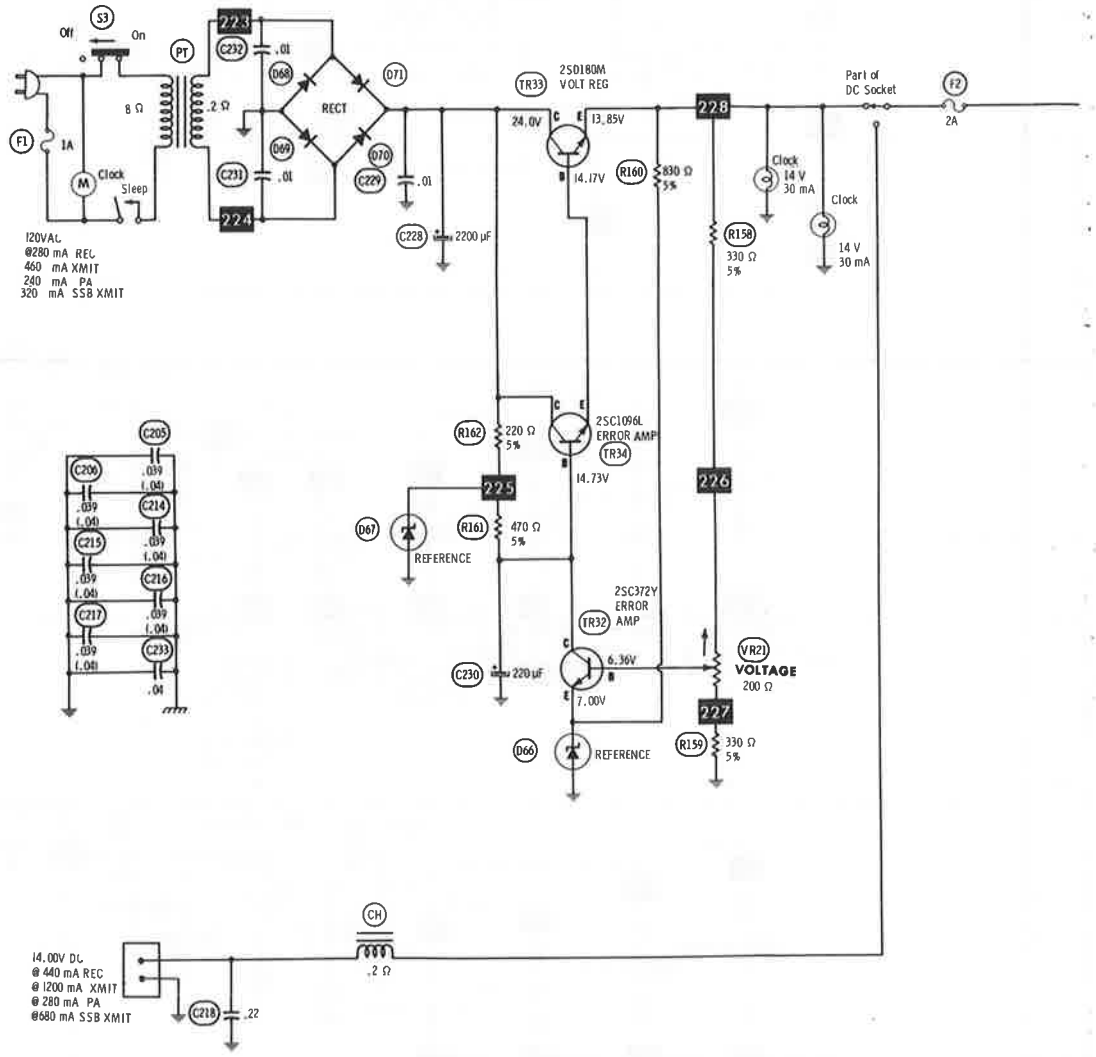

Denotes chassis.
Denotes ground. (Voltage reference unless otherwise indicated)
Indicates connection used in some versiuns.
Indicates connection not used in some versions.
* Omitted in some versions.
⊖ See parts list.
※ Value varies; replace with original value.
▲ Measured in transmit position.
● Measured with unit squelched.
NC No Connection.
Measurements taken with switching in position shown unless otherwise indicated.
Values shown in ( ) are used in some applications.
Resistors are 1/2W or less, 10% or 20%, unless otherwise indicated.
Supply voltage maintained at rated value for measurements.
Voltage and resistance measured with VTVM or equivalent meter, no signal applied and controls adjusted for normal operation.
Arrow on control indicates direction of advance.
Numbers assigned to terminals may not be found on the unit.
Transistor resistances vary widely; no resistance measurements taken.

Transistor Terminal Guides

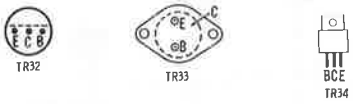

A PHOTOFACT STANDARD NOTATION SCHEMATIC
with CIRCUITRACE

© Howard W. Sams & Co., Inc. 1974

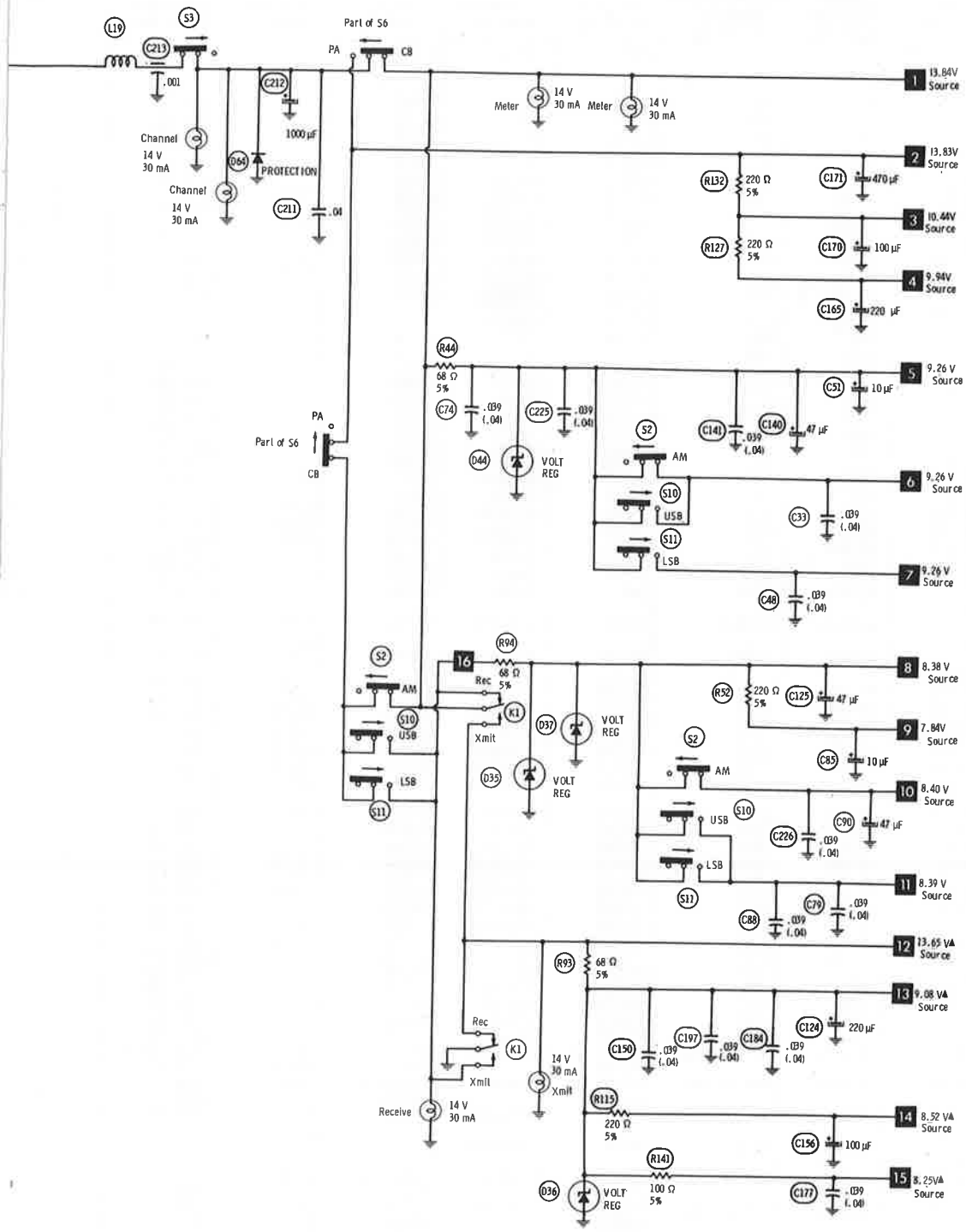

COURIER MODEL CENTURION

PARTS LIST AND DESCRIPTION

(When ordering parts, state Model, Part Number, and Description.)

SEMICONDUCTORS

ITEM No.	TYPE / MFGR. No./PART No.	REPLACEMENT DATA						
		GENERAL ELECTRIC PART No.	INTERNATIONAL RECTIFIER PART No.	MALLORY PART No.	MOTOROLA PART No.	RCA PART No.	SPRAGUE PART No.	SYLVANIA PART No.
D1	1N60P/1042-13	1N60	1N60	PTC206	HEP135	SK3088		ECG 109
D2	/1074-124 (1.5 Zener)							
D3	1N60/294-42-9	1N60	1N60	PTC206	HEP135	SK3088		ECG 109
D4	1N60/294-42-9	1N60	1N60	PTC206	HEP135	SK3088		ECG 109
D5	1N60/294-42-9	1N60	1N60	PTC206	HEP135	SK3088		ECG 109
D6	1N60/294-42-9	1N60	1N60	PTC206	HEP135	SK3088		ECG 109
D7	1N60/294-42-9	1N60	1N60	PTC206	HEP135	SK3088		ECG 109
D8	1N60/294-42-9	1N60	1N60	PTC206	HEP135	SK3088		ECG 109
D9	1N4448/1042-16	GE-300	D200	PTC214	HEPR0602	SK3100	RT218	ECG 177
D10	IS1007/1042-14	GE-300	D200	PTC214	HEPR0602	SK3100	RT218	ECG 177
D11	IS1007/1042-14	GE-300	D200	PTC214	HEPR0602	SK3100	RT218	ECG 177
D12	IS2473/1074-118	GE-300	D200	PTC214	HEPR0602	SK3100	RT218	ECG 177
D13	IS2473/1074-118	GE-300	D200	PTC214	HEPR0602	SK3100	RT218	ECG 177
D14	IS2473/1074-118	GE-300	D200	PTC214	HEPR0602	SK3100	RT218	ECG 177
D15	IS2473/1074-118	GE-300	D200	PTC214	HEPR0602	SK3100	RT218	ECG 177
D16	IS2473/1074-118	GE-300	D200	PTC214	HEPR0602	SK3100	RT218	ECG 177
D17	IS2473/1074-118	GE-300	D200	PTC214	HEPR0602	SK3100	RT218	ECG 177
D18	1N60P/1042-13	1N60	1N60	PTC206	HEP135	SK3088		ECG 109
D19	1N60P/1042-13	1N60	1N60	PTC206	HEP135	SK3088		ECG 109
D20	1N60P/1042-13	1N60	1N60	PTC206	HEP135	SK3088		ECG 109
D21	1N60P/1042-13	1N60	1N60	PTC206	HEP135	SK3088		ECG 109
D23	1N60/294-42-9	1N60	1N60	PTC206	HEP135	SK3088		ECG 109
D24	1N60/294-42-9	1N60	1N60	PTC206	HEP135	SK3088		ECG 109
D25	1N60/294-42-9	1N60	1N60	PTC206	HEP135	SK3088		ECG 109
D26	1N60/294-42-9	1N60	1N60	PTC206	HEP135	SK3088		ECG 109
D27	1N60/294-42-9	1N60	1N60	PTC206	HEP135	SK3088		ECG 109
D28	1N4448/1042-16	GE-300	D200	PTC214	HEPR0602	SK3100	RT218	ECG 177
D29	1N60/294-42-9	1N60	1N60	PTC206	HEP135	SK3088		ECG 109
D30	IS2473/1074-118	GE-300	D200	PTC214	HEPR0602	SK3100	RT218	ECG 177
D31	IS2473/1074-118	GE-300	D200	PTC214	HEPR0602	SK3100	RT218	ECG 177
D32	IS2473/1074-118	GE-300	D200	PTC214	HEPR0602	SK3100	RT218	ECG 177
D33	1N60/294-42-9	1N60	1N60	PTC206	HEP135	SK3088		ECG 109
D34	1N60/294-42-9	1N60	1N60	PTC206	HEP135	SK3088		ECG 109
D35	/1074-122 (8.4 V Zener)	GE-X11	Z1208	ZB8.2	HEPZ0411	SK3059	RT239	ECG 138
D36	/1074-120 (9.0 V Zener)	GEZD-9.1	Z1208	PTC505	HEPZ0412	SK3060	RT240	ECG 139
D37	/1074-120 (9.0 V Zener)	GEZD-9.1	Z1208	PTC505	HEPZ0412	SK3060	RT240	ECG 139
D38	IS2473/1074-118	GE-300	D200	PTC214	HEPR0602	SK3100	RT218	ECG 177
D39	IS2473/1074-118	GE-300	D200	PTC214	HEPR0602	SK3100	RT218	ECG 177
D40	IS2473/1074-118	GE-300	D200	PTC214	HEPR0602	SK3100	RT218	ECG 177
D41	IS2473/1074-118	GE-300	D200	PTC214	HEPR0602	SK3100	RT218	ECG 177
D42	IS2473/1074-118	GE-300	D200	PTC214	HEPR0602	SK3100	RT218	ECG 177
D43	IS2473/1074-118	GE-300	D200	PTC214	HEPR0602	SK3100	RT218	ECG 177
D44	/1074-120 (9.0 V Zener)	GEZD-9.1	Z1208	PTC505	HEPZ0412	SK3060	RT240	ECG 139
D45	IS2473/1074-118	GE-300	D200	PTC214	HEPR0602	SK3100	RT218	ECG 177
D46	1N60/294-42-9	1N60	1N60	PTC206	HEP135	SK3088		ECG 109
D47	1N60/294-42-9	1N60	1N60	PTC206	HEP135	SK3088		ECG 109
D48	IS1007/1042-14	GE-300	D200	PTC214	HEPR0602	SK3100	RT218	ECG 177
D49	IS1007/1042-14	GE-300	D200	PTC214	HEPR0602	SK3100	RT218	ECG 177
D50	IS1007/1042-14	GE-300	D200	PTC214	HEPR0602	SK3100	RT218	ECG 177
D51	IS1007/1042-14	GE-300	D200	PTC214	HEPR0602	SK3100	RT218	ECG 177
D52	IS2473/1074-118	GE-300	D200	PTC214	HEPR0602	SK3100	RT218	ECG 177
D56	IS2473/1074-118	GE-300	D200	PTC214	HEPR0602	SK3100	RT218	ECG 177
D57	IS2473/1074-118	GE-300	D200	PTC214	HEPR0602	SK3100	RT218	ECG 177
D58	1N60/294-42-9	1N60	1N60	PTC206	HEP135	SK3088		ECG 109
D59	1N60/294-42-9	1N60	1N60	PTC206	HEP135	SK3088		ECG 109
D61	1N60P/1042-13	1N60	1N60	PTC206	HEP135	SK3088		ECG 109
D62	1N60P/1042-13	1N60	1N60	PTC206	HEP135	SK3088		ECG 109
D63	1N60/294-42-9	1N60	1N60	PTC206	HEP135	SK3088		ECG 109
D64	SR1-K2/1074-119	GE-504A	8D4 or 5A4D	PTC201 or PTC202	HEPR0052	SK3030 or SK3031	RT213 or RT214	ECG 116 or ECG 117
D65	SR1-K2/1074-119	GE-504A	8D4 or 5A4D	PTC201 or PTC202	HEPR0052	SK3030 or SK3031	RT213 or RT214	ECG 116 or ECG 117
D66	/1074-123 (6.3 V Zener)	GEZD-6.2	Z-1204	PTC503	HEPZ0408	SK3058	RT237	ECG 137
D67	/1074-121 (16.9 V Zener)	GEZD-18	Z-1216	PTC510	HEPZ0420			ECG 5076
D68	SR1-K2/1074-119	GE-504A	8D4 or 5A4D	PTC201 or PTC202	HEPR0052	SK3030 or SK3031	RT213 or RT214	ECG 116 or ECG 117
D69	SR1-K2/1074-119	GE-504A	8D4 or 5A4D	PTC201 or PTC202	HEPR0052	SK3030 or SK3031	RT213 or RT214	ECG 116 or ECG 117
D70	SR1-K2/1074-119	GE-504A	8D4 or 5A4D	PTC201 or PTC202	HEPR0052	SK3030 or SK3031	RT213 or RT214	ECG 116 or ECG 117
D71	SR1-K2/1074-119	GE-504A	8D4 or 5A4D	PTC201 or PTC202	HEPR0052	SK3030 or SK3031	RT213 or RT214	ECG 116 or ECG 117
IC1	TA-7045M/1042-11							ECG 724
IC2	TA-7045M/1042-11							ECG 724
TR1	3SK22Y/1042-01				HEPF2005	SK3116		ECG 220
TR2	2SC839H/1042-04	GE-20	TR-24	PTC123	HEP54	SK3122	RT100	ECG 108
TR3	2SC839H/1042-04	GE-20	TR-24	PTC123	HEP54	SK3122	RT100	ECG 108
TR4	2SC839H/1042-04	GE-20	TR-24	PTC123	HEP54	SK3122	RT100	ECG 108
TR5	2SC839H/1042-04	GE-20	TR-24	PTC123	HEP54	SK3122	RT100	ECG 108
TR6	2SC839H/1042-04	GE-20	TR-24	PTC123	HEP54	SK3122	RT100	ECG 108
TR7	2SK304/1042-02	GE-FET-2	FF-100	PTC152	HEPF0021	SK3116	RT175	ECG 132
TR8	2SC839H/1042-04	GE-20	TR-24	PTC123	HEP54	SK3122	RT100	ECG 108
TR9	2SC945QL/1074-115	GE-20	TR-21	PTC139	HEP724	SK3038	RT102	ECG 123A

PARTS LIST AND DESCRIPTION (CONTINUED)

(When ordering parts, state Model, Part Number, and Description.)

SEMICONDUCTORS (cont)

ITEM No.	TYPE / MFGR. No./PART No.	REPLACEMENT DATA						
		GENERAL ELECTRIC PART No.	INTERNATIONAL RECTIFIER PART No.	MALLORY PART No.	MOTOROLA PART No.	RCA PART No.	SPRAGUE PART No.	SYLVANIA PART No.
TR10	2SC1372Y	GE-20	TR-24	PTC139	HEP55	SK3018	RT102	ECG 123
	2SC945R(1)	GE-20	TR-21	PTC136	HEP728	SK3124	RT102	ECG 123A
TR11	2SC839H/1042-04	GE-20	TR-24	PTC123	HEP54	SK3122	RT100	ECG 108
TR12	2SC839H/1042-04	GE-20	TR-24	PTC123	HEP54	SK3122	RT100	ECG 108
TR13	2SC839H/1042-04	GE-20	TR-24	PTC123	HEP54	SK3122	RT100	ECG 108
TR14	2SC839H/1042-04	GE-20	TR-24	PTC123	HEP54	SK3122	RT100	ECG 108
TR15	2SC372Y	GE-20	TR-24	PTC139	HEP55	SK3018	RT102	ECG 123A
	2SC945R(1)	GE-20	TR-21	PTC136	HEP728	SK3124	RT102	ECG 123A
TR16	2SA495Y/1042-06	GE-21	TR-30	PTC103	HEP52	SK3114	RT115	ECG 159
TR17	2SA495Y/1042-05	GE-21	TR-30	PTC103	HEP52	SK3114	RT115	ECG 159
TR18	2SC372Y	GE-20	TR-24	PTC139	HEP55	SK3018	RT102	ECG 123A
	2SC945R(1)	GE-20	TR-21	PTC136	HEP728	SK3124	RT102	ECG 123A
TR19	2SC372Y	GE-20	TR-24	PTC139	HEP55	SK3018	RT102	ECG 123A
	2SC945R(1)	GE-20	TR-21	PTC136	HEP728	SK3124	RT102	ECG 123A
TR20	2SC372Y	GE-20	TR-24	PTC139	HEP55	SK3018	RT102	ECG 123A
	2SC945R(1)	GE-20	TR-21	PTC136	HEP728	SK3124	RT102	ECG 123A
TR21	2SC839H/1042-04	GE-20	TR-24	PTC123	HEP54	SK3122	RT100	ECG 108
TR22	2SC839H/1042-04	GE-20	TR-24	PTC123	HEP54	SK3122	RT100	ECG 108
TR23	2SC372Y	GE-20	TR-24	PTC139	HEP55	SK3018	RT102	ECG 123A
	2SC945R(1)	GE-20	TR-21	PTC136	HEP728	SK3124	RT102	ECG 123A
TR24	2SC372Y	GE-20	TR-24	PTC139	HEP55	SK3018	RT102	ECG 123A
	2SC945R(1)	GE-20	TR-21	PTC136	HEP728	SK3124	RT102	ECG 123A
TR25	2SC372Y/1042-03	GE-20	TR-24	PTC139	HEP55	SK3018	RT102	ECG 123A
	2SC945R/1042-03	GE-20	TR-21	PTC136	HEP728	SK3124	RT102	ECG 123A
TR26	2SC735Y/1042-05	GE-63	TR-21	PTC123	HEP53	SK3018	RT102	ECG 123A
TR27	2SB474V10/1042-10	GE-31MP(6)	IRTR-94MP(6)	PTC120(7)	HEP643(7)	SK3068(7)		ECG 226MP(6)
TR28	2SB474V10/1042-10							
TR29	2SC710C/1042-07	GE-17	TR-24	PTC121	HEP56	SK3018	RT108	ECG 107
TR30	2SC1306/1042-08	GE-28	IRTR-55	PTC110	HEPS3023	SK3054	RT154	ECG 186
TR31	2SC1307/1042-09	GE-66		PTC110				
TR32	2SC372Y/1042-03	GE-20	TR-24	PTC139	HEP55	SK3018	RT102	ECG 123A
	2SC945R/1042-03	GE-20	TR-21	PTC136	HEP728	SK3124	RT102	ECG 123A
TR33	2SD180M/1074-117	GE-35	TR-26	PTC116	HEP247	SK3027	RT131	ECG 130
TR34	2SC1096L/1074-116	GE-28	IRTR-55	PTC110	HEP245	SK3041	RT133	ECG 186

(1) Used in some versions.
(6) Matched pair.
(7) Two required - select matched pair.

ELECTROLYTIC CAPACITORS

ITEM No.	RATING		REPLACEMENT DATA					
			MFGR. PART No.	ARCO PART No.	CENTRALAB PART No.	CORNELL-DUBILIER PART No.	MALLORY PART No.	SPRAGUE PART No.
C7	.1	25V	10-42-122				TDC104M050EL	SD35-R109
C51	10	16V	1042-129	RME-B-E-010	EP15-10	PC10-25	VTT10A25	EV-1222
C62	10	16V	1042-129	RME-B-E-010	EP15-10	PC10-25	VTT10A25	EV-1222
C66	1	50V		RME-A-J-001	EP50-2	PC1-50	MTV1CB50	EV-1615
	(1	25V)	(1042-132)	RME-A-G-001	EP30-2	PC1-50	MTV1CB50	EV-1315
C82	1	10V	1042-120	ME-1-D-001	EP15-2	PC1-50	MTV1CB50	EV-1315
C84	33	6.3V	1042-117				TDC336M010FL	SD6-339
C85	330	16V		ME-8-E-250	EA15-250	WBR300-35	MTA300G50	EV-1245
	(47	16V)	(1042-128)	RME-E-E-050	EP15-50	PC50-16	MTV50CB15	EV-1226
C86	.1	16V	1042-121				TDC104M050EL	SD35-R109
C87	1	10V	1042-120	ME-1-D-001	EP15-2	PC1-50	MTV1CB50	EV-1315
C89	4.7	10V	1042-119	RME-A-D-005	EP15-5	PC5-50	VTT4R7A50	EV-1319
C90	47	16V	1042-128	RME-E-E-050	EP15-50	PC50-16	MTV50CB15	EV-1226
C101	.47	50V	1042-133				TDC474M050EL	SD35-R479
C107	10	16V	1042-129	RME-B-E-010	EP15-10	PC10-25	VTT10A25	EV-1222
C112	.1	25V	1042-122				TDC104M050EL	SD35-R109
C116	2.2	35V		RME-A-J-002	EP50-2	PC2-100	VTT2R2A50	EV-1517
	(2.2	16V)	(1042-131)	RME-A-E-002	EP15-2	WBR2-50	VTT2R2A50	EV-1317
C117	4.7	25V	1042-130	RME-A-G-005	EP30-5	PC5-50	VTT4R7A50	EV-1319
C118	10	16V	1042-129	RME-B-E-010	EP15-10	PC10-25	VTT10A25	EV-1222
C120	22	16V	1074-138	ME-2-E-020	EP15-25	PC20-50	VTT22A16	EV-1224
C121	10	16V	1042-129	RME-B-E-010	EP15-10	PC10-25	VTT10A25	EV-1222
C122	10	16V	1042-129	RME-B-E-010	EP15-10	PC10-25	VTT10A25	EV-1222
C124	220	16V	1042-125	ME-6-E-200	EA15-250	PC200-16	MTV200DE15	EV-1240
C125	47	16V	1042-128	RME-E-E-050	EP15-50	PC50-16	MTV50CB15	EV-1226
C140	47	16V	1042-128	RME-E-E-050	EP15-50	PC50-16	MTV50CB15	EV-1226
C143	4.7	25V	1042-130	RME-A-G-005	EP30-5	PC5-50	VTT4R7A50	EV-1319
C146	10	16V	1042-129	RME-B-E-010	EP15-10	PC10-25	VTT10A25	EV-1222
C149	1	10V	1042-120	ME-1-D-001	EP15-2	PC1-50	MTV1CB50	EV-1315
C151	10	6.3V	1042-118	RME-A-B-010	EP6-10	PC10-25	VTT10A25	EV-1222
C512	4.7	10V	1042-119	RME-A-D-005	EP15-5	PC5-50	VTT4R7A50	EV-1319
C153	4.7	10V	1042-119	RME-A-D-005	EP15-5	PC5-50	VTT4R7A50	EV-1319
C154	4.7	10V	1042-119	RME-A-D-005	EP15-5	PC5-50	VTT4R7A50	EV-1319
C155	33	6.3V	1042-117				TDC336M010FL	SD6-339
C156	100	16V	1042-127	RME-E-E-100	EP15-100	PC100-16	MTV100CD15	EV-1230
C158	1	10V	1042-120	ME-1-D-001	EP15-2	PC1-50	MTV1CB50	EV-1315
C162	1	10V	1042-120	ME-1-D-001	EP15-2	PC1-50	MTV1CB50	EV-1315
C164	220	6.3V		ME-6-B-200	EA6-250	PC200-10	MTV200DB10	EV-1140
	(220	16V)	(1042-126)	ME-6-E-200	EA15-250	PC200-16	MTV200DE15	EV-1240
C165	220	16V	1042-125	ME-6-E-200	EA15-250	PC200-16	MTV200DE15	EV-1240
C166	1	10V	1042-120	ME-1-D-001	EP15-2	PC1-50	MTV1CB50	EV-1315
C168	.1	16V	1042-121				TDC104M050EL	SD35-R109
C169	220	6.3V		ME-6-B-200	EA6-250	PC200-10	MTV200DB10	EV-1140
	(220	16V)	(1042-126)	ME-6-E-200	EA15-250	PC200-16	MTV200DE15	EV-1240
C170	220	16V	1042-125	ME-6-E-200	EA15-250	PC200-16	MTV200DE15	EV-1240

PARTS LIST AND DESCRIPTION (CONTINUED)

(When ordering parts, state Model, Part Number, and Description.)

ELECTROLYTIC CAPACITORS (cont)

ITEM No.	RATING		REPLACEMENT DATA					
			MFGR. PART No.	ARCO PART No.	CENTRALAB PART No.	CORNELL-DUBILIER PART No.	MALLORY PART No.	SPRAGUE PART No.
C171	470	16V	1042-124	RME-L-E-500	EA15-500	PC500-16	MTV500DN15	EV-1250
C174	220	25V	1042-134	ME-G200	EA30-250	PC200-35	MTV200DE25	EV-1340
C212	1000	25V	1042-123	RME-P-G-1000	EA30-1000	WBR1000-25	MTA1000G25	EV-1360
C221	10	16V	1042-129	RME-B-E-010	EP15-10	PC10-25	VTT10A25	EV-1222
C223	2.2	35V		RME-A-J-002	EP50-2	PC2-100	VTT2R2A50	EV-1517
	(4.7	25V)	(1042-130)	RME-A-G-005	EP30-5	PC5-50	VTT4R7A50	EV-1319
C228	2200	25V	1074-37	ME-G2000		WBR2000-25	TC2520A	TVA-1213.5
C230	220	16V	1042-125	ME-6-E-200	EA15-250	PC200-16	MTV200DE15	EV-1240

( ) Used in some versions.

CAPACITORS

ITEM No.	RATING			MFGR. PART No.	REPLACEMENT DATA				
					ARCO/ELMENCO PART No.	CENTRALAB PART No.	CORNELL-DUBILIER PART No.	MALLORY PART No.	SPRAGUE PART No.
C1	25		10%			DTZ-25		CN0425	10TCC-Q25
C2	.2					UK25-204		MAG24022	HY-770
C3	.01				CCD-103	CK-103	MGP01	TA110	TG-S10
C4	.001				CCD-102	DD-102	GP1000	SM210	2SS-D10
C5	150		10%		CCD-151	DD-151	GP150	GP315	10TS-T15
C6	.02				CCD-203	CK-203	MGP02	TA120	TG-S20
C8	2					DTZ-2R2	NP02P2	CN0522	10TCC-V22
C9	.039					DD-403		GP140	
C10	.001				CCD-102	DD-102	GP1000	SM210	2SS-D10
C11	.005				CCD-502	CK-502	MGP005	TA250	TG-D50
C12	10				CCT0-100	DTZ-10	NP010	CN0410	10TCC-Q10
C13	3	N470			*			*	10TCT-V30
C14	20				CCT0-200	DTZ-20	NP020	CN0420	10TCC-Q20
C15	20				CCT0-200	DTZ-20	NP020	CN0420	10TCC-Q20
C16	20				CCT0-200	DTZ-20	NP020	CN0420	10TCC-Q20
C17	20				CCT0-200	DTZ-20	NP020	CN0420	10TCC-Q20
C18	20				CCT0-200	DTZ-20	NP020	CN0420	10TCC-Q20
C19	20				CCT0-200	DTZ-20	NP020	CN0420	10TCC-Q20
C20	20				CCT0-200	DTZ-20	NP020	CN0420	10TCC-Q20
C21	20				CCT0-200	DTZ-20	NP020	CN0420	10TCC-Q20
C22	20				CCT0-200	DTZ-20	NP020	CN0420	10TCC-Q20
C23	20				CCT0-200	DTZ-20	NP020	CN0420	10TCC-Q20
C24	20				CCT0-200	DTZ-20	NP020	CN0420	10TCC-Q20
C25	20				CCT0-200	DTZ-20	NP020	CN0420	10TCC-Q20
C26	20				CCT0-200	DTZ-20	NP020	CN0420	10TCC-Q20
C27	20				CCT0-200	DTZ-20	NP020	CN0420	10TCC-Q20
C28	40		10%					CN0439	10TCC-Q39
C29	100		10%		CCT0-101	DTZ-100	NP0100	CN0310	10TCC-T10
C30	80				CCT0-820	DTZ-82	NP082	CN0482	10TCC-Q82
C31	150				CCD-151	DD-151	GP150	GP315	10TS-T15
C32	150		10%		CCD-151	DD-151	GP150	GP315	10TS-T15
C33	.039					DD-403		GP140	
C34	100		10%		CCD-101	DD-101	GP100	GP310	10TS-T10
C35	100		10%		CCD-101	DD-101	GP100	GP310	10TS-T10
C36	40		10%					CN0439	10TCC-Q39
C37	.001				CCD-102	DD-102	GP1000	SM210	2SS-D10
C38	100		10%		CCD-101	DD-101	GP100	GP310	10TS-T10
C39	400		10%		CCD-391	DD-391	GP390	GP339	10TS-T39
C40	40		10%					CN0439	10TCC-Q39
C41	.039					DD-403		GP140	
C42	.039					DD-403		GP140	
C43	60		10%					CN0456	10TCC-Q56
C44	.001				CCD-102	DD-102	GP1000	SM210	2SS-D10
C45	100		10%		CCT0-101	DTZ-100	NP0100	CN0310	10TCC-T10
C46	2					DTZ-2R2	NP02P2	CN0522	10TCC-V22
C47	60		10%					CN0456	10TCC-Q56
C48	.039					DD-403		GP140	
C49	2					DTZ-2R2	NP02P2	CN0522	10TCC-V22
C50	60		10%					CN0456	10TCC-Q56
C52	.039					DD-403		GP140	
C53	.039					DD-403		GP140	
C54	.039					DD-403		GP140	
C55	.039					DD-403		GP140	
C56	.039					DD-403		GP140	
C57	.039					DD-403		GP140	
C58	5						NP05		10TCC-V50
C59	.02				CCD-203	CK-203	MGP02	TA120	TG-S20
C60	.01				CCD-103	CK-103	MGP01	TA110	TG-S10
C61	.01				CCD-103	CK-103	MGP01	TA110	TG-S10
C63	.01				CCD-103	CK-103	MGP01	TA110	TG-S10
C64	.001				CCD-102	DD-102	GP1000	SM210	2SS-D10
C65	.01				CCD-103	CK-103	MGP01	TA110	TG-S10
C67	.01				CCD-103	CK-103	MGP01	TA110	TG-S10
C68	.01				CCD-103	CK-103	MGP01	TA110	TG-S10
C69	.001				CCD-102	DD-102	GP1000	SM210	2SS-D10
C70	.001				CCD-102	DD-102	GP1000	SM210	2SS-D10
C71	.001				CCD-102	DD-102	GP1000	SM210	2SS-D10
C72	.001				CCD-102	DD-102	GP1000	SM210	2SS-D10
C73	.04					DD-403		GP140	
C74	.04					DD-403		GP140	
C75	.039					DD-403		GP140	
C76	.039					DD-403		GP140	
C77	.039					DD-403		GP140	
C78	.039					DD-403		GP140	

PARTS LIST AND DESCRIPTION (CONTINUED)

(When ordering parts, state Model, Part Number, and Description.)

CAPACITORS (cont)

ITEM No.	RATING		MFGR. PART No.	REPLACEMENT DATA				
				ARCO/ELMENCO PART No.	CENTRALAB PART No.	CORNELL-DUBILIER PART No.	MALLORY PART No.	SPRAGUE PART No.
C79	.04				DD-403		GP140	
C80	.01			CCD-103	CK-103	MGP01	TA110	TG-S10
C81	.018			CCD-203	CK-203	MGP02	TA120	TG-S20
C83	.001			CCD-102	DD-102	GP1000	SM210	2SS-D10
C88	.04				DD-403		GP140	
C91	20	N750		*	DTN-20	N20	CN7420	10TCU-Q20
C92	.001			CCD-102	DD-102	GP1000	SM210	2SS-D10
C93	150		10%	CCD-151	DD-151	GP150	GP315	10TS-T15
C94	.039				DD-403		GP140	
C95	.039				DD-403		GP140	
C96	10			CCT0-100	DTZ-10	NP010	CN0410	10TCC-Q10
C97	.039				DD-403		GP140	
C98	500		10%	DM-19-501J	CPR-510J	CD15FD511J03	SX351	424ME5100J501
C99	.039				DD-403		GP140	
C100	.039				DD-403		GP140	
C102	.039				DD-403		GP140	
C103	.039				DD-403		GP140	
C104	.039				DD-403		GP140	
C105	.039				DD-403		GP140	
C106	.039				DD-403		GP140	
C108	25		10%		DTZ-25		CN0425	10TCC-Q25
C109	.039				DD-403		GP140	
C110	.01			CCD-103	CK-103	MGP01	TA110	TG-S10
C111	500		10%	CCD-501	DD-501	GP500	GP350	10TS-T50
C113	.02			CCD-203	CK-203	MGP02	TA120	TG-S20
C114	.018			CCD-203	CK-203	MGP02	TA120	TG-S20
C115	.039				DD-403		GP140	
C119	.039				DD-403		GP140	
C123	.01			CCD-103	CK-103	MGP01	TA110	TG-S10
C126	.01			CCD-103	CK-103	MGP01	TA110	TG-S10
C127	.01			CCD-103	CK-103	MGP01	TA110	TG-S10
C128	.039				DD-403		GP140	
C129	20	N750		*	DTN-20	N20	CN7420	10TCU-Q20
C130	.001			CCD-102	DD-102	GP1000	SM210	2SS-D10
C131	.039				DD-403		GP140	
C132	20	N750		*	DTN-20	N20	CN7420	10TCU-Q20
C133	.001			CCD-102	DD-102	GP1000	SM210	2SS-D10
C134	.001			CCD-102	DD-102	GP1000	SM210	2SS-D10
C135	.001			CCD-102	DD-102	GP1000	SM210	2SS-D10
C136	100		10%	CCD-101	DD-101	GP100	GP310	10TS-T10
C137	10			CCT0-100	DTZ-10	NP010	CN0410	10TCC-Q10
C138	10			CCT0-100	DTZ-10	NP010	CN0410	10TCC-Q10
C139	.039				DD-403		GP140	
C141	.039				DD-403		GP140	
C142	6							10TCC-V56
C144	10			CCT0-100	DTZ-10	NP010	CN0410	10TCC-Q10
C145	.01			CCD-103	CK-103	MGP01	TA110	TG-S10
C147	.01			CCD-103	CK-103	MGP01	TA110	TG-S10
C148	.01			CCD-103	CK-103	MGP01	TA110	TG-S10
C150	.039				DD-403		GP140	
C157	.01			CCD-103	CK-103	MGP01	TA110	TG-S10
C159	.04				DD-403		GP140	
C160	.04				DD-403		GP140	
C161	.039				DD-403		GP140	
C163	.039				DD-403		GP140	
C167	.01			CCD-103	CK-103	MGP01	TA110	TG-S10
C172	.02			CCD-203	CK-203	MGP02	TA120	TG-S20
C173	.02			CCD-203	CK-203	MGP02	TA120	TG-S20
C175	50		10%	CCT0-510	DTZ-50	NP050	CN0450	10TCC-Q50
C176	.039				DD-403		GP140	
C177	.039				DD-403		GP140	
C178	.02			CCD-203	CK-203	MGP02	TA120	TG-S20
C179	5					NP05		10TCC-V50
C180	.039				DD-403		GP140	
C181	1					CN0510		10TCC-V10
C182	30		10%	CCT0-300				10TCC-Q30
C183	.039				DD-403		GP140	
C184	.039				DD-403		GP140	
C185	.04				DD-403		GP140	
C186	.039				DD-403		GP140	
C187	30		10%	CCT0-300				10TCC-Q30
C188	220		10%	CCD-221	DD-221	GP220	GP322	10TS-T22
C189	.039				DD-403		GP140	
C190	4					NP03P9		10TCC-V39
C191	.039				DD-403		GP140	
C192	.039				DD-403		GP140	
C193	.039				DD-403		GP140	
C194	80		10%	CCT0-820	DTZ-82	NP082	CN0482	10TCC-Q82
C195	.039				DD-403		GP140	
C196	.039				DD-403		GP140	
C197	.039				DD-403		GP140	
C198	250		10%	CCD-270	DD-271	GP270	GP327	10TS-T27
C199	150		10%	CCD-151	DD-151	GP150	GP315	10TS-T15
C200	250		10%	CCD-270	DD-271	GP270	GP327	10TS-T27
C201	330		10%	CCD-331	DD-331	GP330	GP333	10TS-T33
C202	120			CCT0-101	DTZ-100	NP0100	CN0310	10TCC-T10
C203	.04				DD-403		GP140	
C204	.039				DD-403		GP140	
C205	.039				DD-403		GP140	
C206	.04				DD-403		GP140	
C207	.04				DD-403		GP140	

PARTS LIST AND DESCRIPTION (CONTINUED)

(When ordering parts, state Model, Part Number, and Description.)

CAPACITORS (cont)

ITEM No.	RATING	MFGR. PART No.	REPLACEMENT DATA				
			ARCO/ELMENCO PART No.	CENTRALAB PART No.	CORNELL-DUBILIER PART No.	MALLORY PART No.	SPRAGUE PART No.
C208	.01		CCD-103	CK-103	MGP01	TA110	TG-S10
C209	.01		CCD-103	CK-103	MGP01	TA110	TG-S10
C210	.01		CCD-103	CK-103	MGP01	TA110	TG-S10
C211	.039			DD-403		GP140	
C213	.001		CCD-102	DD-102	GP1000	SM210	2SS-D10
C214	.039			DD-403		GP140	
C215	.039			DD-403		GP140	
C216	.039			DD-403		GP140	
C217	.039			DD-403		GP140	
C218	.2			UK-204		MAG25022	HY-770
C219	10		CCT0-100	DTZ-10	NP010	CN0410	10TCC-Q10
C220	.01		CCD-103	CK-103	MGP01	TA110	TG-S10
C222	.039			DD-403		GP140	
C224	25 10%			DTZ-25		CN0425	10TCC-Q25
C225	.04			DD-403		GP140	
C226	.039			DD-403		GP140	
C227	.001		CCD-102	DD-102	GP1000	SM210	2SS-D10
C229	.01		CCD-103	CK-103	MGP01	TA110	TG-S10
C231	.01		CCD-103	CK-103	MGP01	TA110	TG-S10
C232	.01		CCD-103	CK-103	MGP01	TA110	TG-S10
C233	.04			DD-403		GP140	
C234	.01		CCD-103	CK-103	MGP01	TA110	TG-S10
C235	.068		CCD-503	CK-503	MGP05	TA150	TG-S50
C236	.04			DD-403		GP140	
C237	.04			DD-403		GP140	
C238	25 10%			DTZ-25		CN0425	10TCC-Q25
CT1	50	1042-101					
CT2	20	1042-53					
CT3	20	1042-53					
CT4	20	1042-53					
CT5	20	1042-53					
CT6	20	1042-53					
CT7	20	1042-53					
CT8	20	1042-53					
CT9	20	1042-53					
CT10	20	1042-53					
CT11	20	1042-53					
CT12	20	1042-53					
CT13	20	1042-53					
CT14	20	1042-53					
CT15	20	1042-53					
CT16	20	1042-53					
CT17	20	1042-53					
CT18	20	1042-53					
CT19	20	1042-53					
CT20	150	1042-102					

* Not normally in distributor's stock. Available thru distributor on order to manufacturer.

CONTROLS (All wattages 1/2 watt, or less, unless listed)

ITEM No.	FUNCTION	RESIST-ANCE	REPLACEMENT DATA				
			MFGR. PART No.	CENTRALAB PART No.	CLAROSTAT PART No.	CTS—IRC PART No.	MALLORY PART No.
VR1	RF Gain	100K	1042-95	TSV-100K or T-100K	C-104	X201R104B	MTC15L1
VR2	AM "S" Meter	10K	1042-98	TSV-10K (1) or T-10K (1)	C-103 (1)	X201R103B (1)	MTC14L1 (1)
VR3	AM Squelch Range	10K	1042-98	TSV-10K (1) or T-10K (1)	C-103 (1)	X201R103B (1)	MTC14L1 (1)
VR4	SSB "S" Meter	20K	1042-97	T-20K or TSV-25K	C-253	X201R252B	MTC24L1
VR5	AM Volume	100K	1042-96	TSV-100 K (1) or T-100K (1)	C-104 (1)	X201R104B (1)	MTC15L1 (1)
VR6	SSB Squelch	500K	1042-73	TSV-500K (1) or T-500K (1)	C-504 (1)	X201R504B (1)	MTC55L1 (1)
VR7	RF Range	10K	1042-98	TSV-10K (1) or T-10K (1)	C-103 (1)	X201R103B (1)	MTC14L1 (1)
VR8	RF Gain	10K	1074-20	F1-10K,SNK100	A47-100K-S,RS-2 or [NP-10K-S, UP-A-400]	BU1,CF9,SS5,DC1	UA14L,SN1000 or U20]
VR9	AM Squelch	300K	1042-94	TSV-500K (1) or T-500K (1)	C-504 (1)	X201R504B (1)	MTC3253L1 (1)
VR10	Squelch/Switch	100K	1074-128	F1-100K, SPU304,KR8FR	NP-100K-S, UPP-A-400, PPAP,NWG-18	BU1,CF13,SS10,K	RUP154L,SL38, SL250
VR11	SSB "S" Meter	10K	1042-98	TSV-10K (1) or T-10K (1)	C-103 (1)	X201R103B (1)	MTC14L1 (1)
VR12	SSB Gain	10K	1042-98	TSV-10K (1) or T-10K (1)	C-103 (1)	X201R103B (1)	MTC14L1 (1)
VR13	SSB Gain	470	1042-87	TSV-500 (2) or T-500 (2)	C-501 (2)	X201R501B (2)	MTC52L1 (2)
VR14	SSB Modulation Balance	10K	1042-98	TSV-10K (1) or T-10K (1)	C-103 (1)	X201R103B (1)	MTC14L1 (1)
VR15	SSB Modulation	5000	1042-99	TSV-5K or T-5000	C-502	X201R502B	MTC52L1
VR16	Volume	10K	1074-18	F2-10K, SNK100	A47-10K-Z, RS-2 or [NP-10K-Z, UP-A-400]	BU1,CF61,SS5, DC1	UA14A,SN1000 or [RU14A,SL38, SN1000 or U18]

PARTS LIST AND DESCRIPTION (CONTINUED)

(When ordering parts, state Model, Part Number, and Description.)

CONTROLS (All wattages 1/2 watt, or less, unless listed) (cont)

ITEM No.	FUNCTION	RESIST-ANCE	REPLACEMENT DATA				
			MFGR. PART No.	CENTRALAB PART No.	CLAROSTAT PART No.	CTS—IRC PART No.	MALLORY PART No.
VR17	Driver Gain	50,2W WW	1042-88	WP-100 or V-60		P117R500A or 110-60	MR100P
VR18	Bias	200	1042-100	T-200 (1) or TSV-250 (1)		X201R251B (1)	MTC251L1 (1)
VR19	Cal	5000	1074-21	F1-5000, SSK100	A47-5000-S, KSS-3 or [NP-5000-S, UP-C-400]	BU1,CF8,SS1,DC1	UA53L,SN1000 or [RU53L,SL38, SN1000 or U14]
VR20	RF Power	10K	1042-98	TSV-10K (1) or T-10K (1)	C-103 (1)	X201R103B (1)	MTC13L1 (1)
VR21	Voltage	200	1074-22	T-200 (1) or T-250 (1)		X201R201B (1)	MTc22L1 (1)

(1) Cut off one of the end terminals and bend to fit PC Board.
(2) For horizontal mounting, bend the two outside terminals to fit PC Board. Use jumper to connect center terminal to PC Board.

RESISTORS (Power and Special)

ITEM No.	RATING	REPLACEMENT DATA	
		WORKMAN PART No.	MFGR. PART No.
D22	Varistor		1042-23
D53	Varistor		1042-23
D54	Varistor		1042-23
D55	Varistor		1042-23
R135	4 5W WW	5W-SQ4	1042-169

ITEM No.	RATING	REPLACEMENT DATA	
		WORKMAN PART No.	MFGR. PART No.
R136	1 1/2W Film		1042-170
R150	.5 1/2W Carbon		
R165	10 3W Film		1074-40
TH1	5K (Cold)		1042-21
TH2	45 (Cold)		1042-22

COILS (RF-IF)

ITEM No.	USE	REPLACEMENT DATA			
		PART No.	MEISSNER PART No.	MILLER PART No.	REMARKS
L1	TVI Trap	1042-40			
L2	RF Choke (20uh)	1042-41	19-6022	74F225AI	
L3	RF Choke (3.9uh)	1042-45	19-1003	74F396AP	
L4	RF Choke (8.2uh)	1042-46	19-2015	74F826AP	
L5	RF Choke (10uh)	1042-47	19-2017	74F105AP	
L6	Peaking (100uh)	1042-48	19-2025	74F104AI	
L7	Peaking (100uh)	1042-48	19-2025	74F104AI	
L8	Peaking (100uh)	1042-48	19-2025	74F104AI	
L9	Peaking (100uh)	1042-48	19-2025	74F104AI	
L10	RF Choke (1.2uh)	1074-01	19-2009	74F106AP	
L11	RF Choke (1.2uh)	1074-01	19-2009	74F106AP	
L12	RF Choke (Adjustable)	1042-42			
L13	RF Choke (1.2uh)	1074-01	19-2009	74F106AP	
L14	AM Antenna	1042-42			
L15	SSB Antenna	1042-42			
L16	Pi Filter	1042-43			
L17	Pi Filter	1042-43			
L18	Pi Filter	1042-43			
T1	Rec. Antenna	1042-24			
T2	Red. RF	1042-25			
T3	Rec. RF	1042-25			
T4	Input Mixer	1042-26			
T5	Output Mixer	1042-27			
T6	Harmonic Suppressor	1042-28			
T7	Harmonic Suppressor	1042-28			
T8	Oscillator Buffer	1042-28			
T9	1st Mixer Output	1042-29			
T10	7.8MHz SSB IF	1042-30			
T11	7.8MHz SSB IF	1042-30			
T12	2nd Mixer Input	1042-30			
T14	Interstage IF	1042-34	16-9034	8811	
T15	Output IF	1042-35	16-9035	8812	
T16	Carrier Oscillator	1042-33			
T17	Output Mixer	1042-32			
T18	Xmtr, SSB IF	1042-36			
T19	Xmtr, SSB 1st Mixer	1042-37			
T20	Xmtr, SSB 2nd Mixer	1042-38			
T21	Xmtr, SSB Buffer	1042-39			

FILTER CHOKE

ITEM No.	RATINGS			REPLACEMENT DATA				NOTES
	CURRENT (Measured)	DC RES.	INDUCTANCE (0 CURRENT 1000~)	MFGR. PART No.	STANCOR PART No.	THORDARSON PART No.	TRIAD PART No.	
CH	440 mA Rec 1200 mA AM 680 mA SSB	.2	2.6 mH	1074-04 (7111)		TR159		( ) On Unit.

TRANSFORMER (Power)

ITEM No.	RATING		REPLACEMENT DATA				NOTES
	PRI.	SEC. 1	MFGR. PART No.	STANCOR PART No.	THORDARSON PART No.	TRIAD PART No.	
PT	120VAC @ .46A	19VAC @ 1.2A	1074-05 (PT-103-0)				( ) On Unit.

PARTS LIST AND DESCRIPTION (CONTINUED)

(When ordering parts, state Model, Part Number, and Description.)

TRANSFORMER (Driver)

ITEM No.	TURNS RATIO			REPLACEMENT DATA				NOTES
	PRI.	SEC. 1	SEC. 2	MFGR. PART No.	STANCOR PART No.	THORDARSON PART No.	TRIAD Part No.	
IPT	1.0	1.0		1074-02 (8308)				( ) On Unit.

TRANSFORMER (Audio Output)

ITEM No.	IMPEDANCE		REPLACEMENT DATA				NOTES
	PRI.	SEC.	MFGR. PART No.	STANCOR PART No.	THORDARSON PART No.	TRIAD PART No.	
OPT	32	8	1074-03 (8307)				( ) On Unit.

SPEAKER

ITEM No.	TYPE	REPLACEMENT DATA		NOTES
		MFGR. PART No.	QUAM PART No.	
SP1	3 x 5" PM 8 ohms	1074-10 (121-56)	35A05Z8	( ) On Unit.

FUSE DEVICES

ITEM No.	DESCRIPTION	REPLACEMENT DATA						
		PART No.		BUSS PART No.		LITTELFUSE PART No.		WORKMAN PART No.
		DEVICE	HOLDER	DEVICE	HOLDER	DEVICE	HOLDER	DEVICE
F1	1A 250V	1074-08		AGC1	HKP	312001	342104	FG1-2
F2	2A 3AG 125V Slo-Blo	1042-104		MDL2	HKP	313002	342104	

MISCELLANEOUS

ITEM No.	PART NAME	PART No.	NOTES
M1	Meter	1074-23	SWR
M2	Meter	1074-24	S/RF
M3	Clock	1074-06	
MF1	Ceramic Filter	1042-50	455 KHz
S1	Switch	1042-64	Channel Selector
S2	Switch	1074-14	Mode (Includes S2, S10, S11)
S3	Switch	1074-15	Power
S4	Switch	1042-61	DC Power
S5	Switch	1074-14	Blanker, Noise
S6	Switch	1074-15	PA/CB Selector
S7	Switch	1074-16	SWR Cal.
S8	Relay	1042-59	Xmit. -Rec.
S9	Relay	1074-24	SSB
TT3	Mechanical Filter	1042-49	455 KHz
X1D	Crystal	1042-67	11.000 MHz
X2E	Crystal	1042-68	11.050 MHz
X3F	Crystal	1042-69	11.100 MHz
X4I	Crystal	1042-70	11.150 MHz
X5H	Crystal	1042-71	11.200 MHz
X6G	Crystal	1042-72	11.250 MHz
X7J	Crystal	1042-73	8.1665 MHz
X8K	Crystal	1042-74	8.1765 MHz
X9L	Crystal	1042-75	8.1865 MHz
X10M	Crystal	1042-76	8.2065 MHz
X11N	Crystal	1042-77	8.1635 MHz
X12O	Crystal	1042-78	8.1735 MHz
X13X	Crystal	1042-79	8.1835 MHz
X14Y	Crystal	1042-80	8.2035 MHz
X15C	Crystal	1042-81	7.3435 MHz
X16B	Crystal	1042-8Z	7.7985 MHz
X17A	Crystal	1042-83	7.8015 MHz
XF1	Crystal Filter	1042-84	7.8 MHz

CABINETS & CABINET PARTS (When ordering specify model, chassis & color)

ITEM	PART No.
Knob, Channel	1074-67
Knob, Clock	1074-69
Knob, Clock	1074-70

ITEM	PART No.
Knob, Power Switch	1074-92
Knob, Volume	1074-68
Kial, Channel	1074-109

ACCESSORIES

ITEM	MFGR. PART No.	REMARKS
Microphone	1042-58	W/hanger.
Plug, DC power connector	1042-61	
Cord, DC power	1074-114	W/plug.

WIRING DATA

General-use Hook-up Wire ..... Use BELDEN No. 8530 (Solid) Available in 12 Colors
8524 (Stranded) Available in 12 Colors

Shielded Antenna Lead ..... Use BELDEN No. 8214 Lowest-loss (RG-8/U Type)
8237 Low-loss (RG-8/U)
8240 (Solid) Miniature (RG-58/U)
8259 (Stranded) Miniature (RG-58A/U)

Coiled Microphone Cable ..... Use BELDEN No. 8497 3-Conductor,1 Shielded,for Press-to-Talk (Neoprene)
8496 3-Conductor,1 Shielded,for Press-to-Talk (Vinyl)

Ignition Noise Suppression ..... Use BELDEN No. 7300-Series Spark-Plug Sets

Bonding Strap ..... Use BELDEN No. 8661 (3/8 In.)

NOTE

ONLY THOSE PERSONS PROPERLY LICENSED ARE PERMITTED TO MAKE REPAIRS OR ADJUSTMENTS WHICH MAY RESULT IN ILLEGAL OPERATION. (REFER TO FCC RULES AND REGULATIONS PART 95, SUBPARTS C & D.)

The frequency of the transmitter should be checked periodically with a secondary frequency standard to insure proper and legal operation.

Best results will be obtained when adjusting the final RF output circuit if the antenna normally used is connected and the chassis is as nearly in the cabinet as possible.

Connect either 50-ohm dummy load or the normally used antenna system.

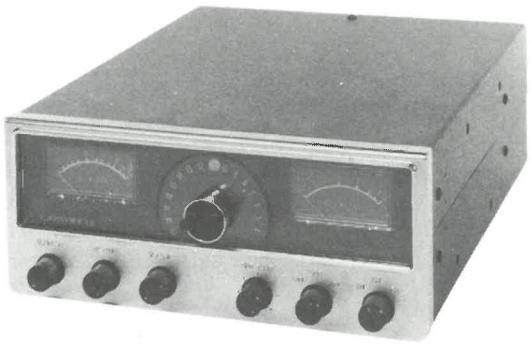

MODEL Telsat SSB-25A (99-32559W)

SYNTHESIZER ALIGNMENT

Trimmer capacitors should not require adjustment unless an oscillator circuit component has been replaced.

23MHz OSCILLATOR
Connect a frequency meter or counter input to TP1 (emitter of Q1). Set FINE TUNE control to center position. Key transmitter and adjust to frequency ±25Hz.

CHANNEL SELECTOR	ADJUST	FREQUENCY
1	TC1	23.330MHz
5	TC2	23.380MHz
9	TC3	23.430MHz
13	TC4	23.480MHz
17	TC5	23.530MHz
21	TC6	23.580MHz

With FINE TUNE control in center position oscillator frequency should not change when transmitter is un-keyed; adjust trimmer on back of FINE TUNE control to equalize transmit and receive frequencies if necessary.

14MHz OSCILLATORS
Connect a frequency meter or counter to TP3 (emitter of Q3). Set mode switch to USB or AM. Adjust to frequency ±5Hz.

CHANNEL SELECTOR	ADJUST	FREQUENCY
1	TC7	14.910MHz
2	TC8	14.920MHz
3	TC9	14.930MHz
4	TC10	14.950MHz

Connect frequency meter or counter to TP4 (emitter of Q4). Set mode switch to LSB. Adjust to frequency ±5kHz.

CHANNEL SELECTOR	ADJUST	FREQUENCY
1	TC11	14.907MHz
2	TC12	14.917MHz
3	TC13	14.927MHz
4	TC14	14.947MHz

11MHz OSCILLATORS
Connect a frequency meter or counter to TP6 (emitter of Q6). Set mode switch to USB. Adjust TC15 to frequency of 11.275MHz.

Connect frequency meter or counter to TP7 (emitter of Q7). Set mode switch to LSB. Adjust TC16 to frequency of 11.272MHz.

HOWARD W. SAMS & CO., INC. Indianapolis, Indiana 46206

© 1974 Howard W Sams & Co., Inc. Printed in U. S. of America 4CY122

RECEIVER ALIGNMENT

Suggested Alignment Tools:	GC ELECTRONICS
L1 thru L16, L21, L24, L26, L30, L32, L33	#9440
L18, L26 thru L29, L31	#9087, 9089
L19, L20	#9440, 9295, 9302

Connect an AC VTVM across speaker voice coil. Set SQUELCH control fully counterclockwise, FINE TUNE to center position, and ANL/NS to ANL. Adjust VOLUME control for suitable reading.

SIGNAL GENERATOR	CHANNEL	ADJUST	REMARKS
AM Connect high side thru .01mfd to cathode of D35 or D36 (2nd Mixer), low side to ground. Set to 455kHz (Mod).	Any	L29, L28, L27, MF	Set mode switch to AM. Adjust for maximum.
Connect high side thru .01mfd to antenna connector, low side to chassis. Set to 27.085MHz. (Channel 11) (Mod.)	11	L33, L26, L24, L23, L22	Adjust for maximum.
AM SQUELCH ADJUSTMENT Connect high side thru .01mfd to antenna connector, low side to chassis. Set to 27.085MHz (Channel 11) (Unmod). Set output level to desired squelch maximum.	11	RV15	Turn SQUELCH control fully clockwise (maximum). Adjust until squelch just opens.
AM S-METER ADJUSTMENT As above. Set output level to 150uv.	11	RV14	Adjust for reading of 9 on S-RF meter.
SSB Connect high side thru .01mfd to antenna connector, low side to chassis. Set output to 27.086MHz. (Unmod).	11	L25, L10, L21, RV11	Set mode switch to USB. Adjust for maximum.
SSB SQUELCH ADJUSTMENT As above. Set output level to desired squelch maximum.	11	RV12	Turn SQUELCH control fully clockwise. Adjust until squelch just opens.
SSB S-METER ADJUSTMENT As above. Set output level to 150uv.	11	RV13	Adjust for reading of 9 on S-RF meter.
NOISE SILENCER ADJUSTMENT Connect high side thru .01mfd to antenna connector, low side to chassis. Set to approximately 24MHz. (Mod). Connect the vertical input of an oscilloscope to observe detected signal, high side to TP25, low side to ground.		L32, L31, L30, TC19	Set ANL/NS switch to NS. Adjust for maximum without causing oscillation. Band width should be at least 500kHz, centered near 24MHz.

(CONTINUED ON PAGE 44)

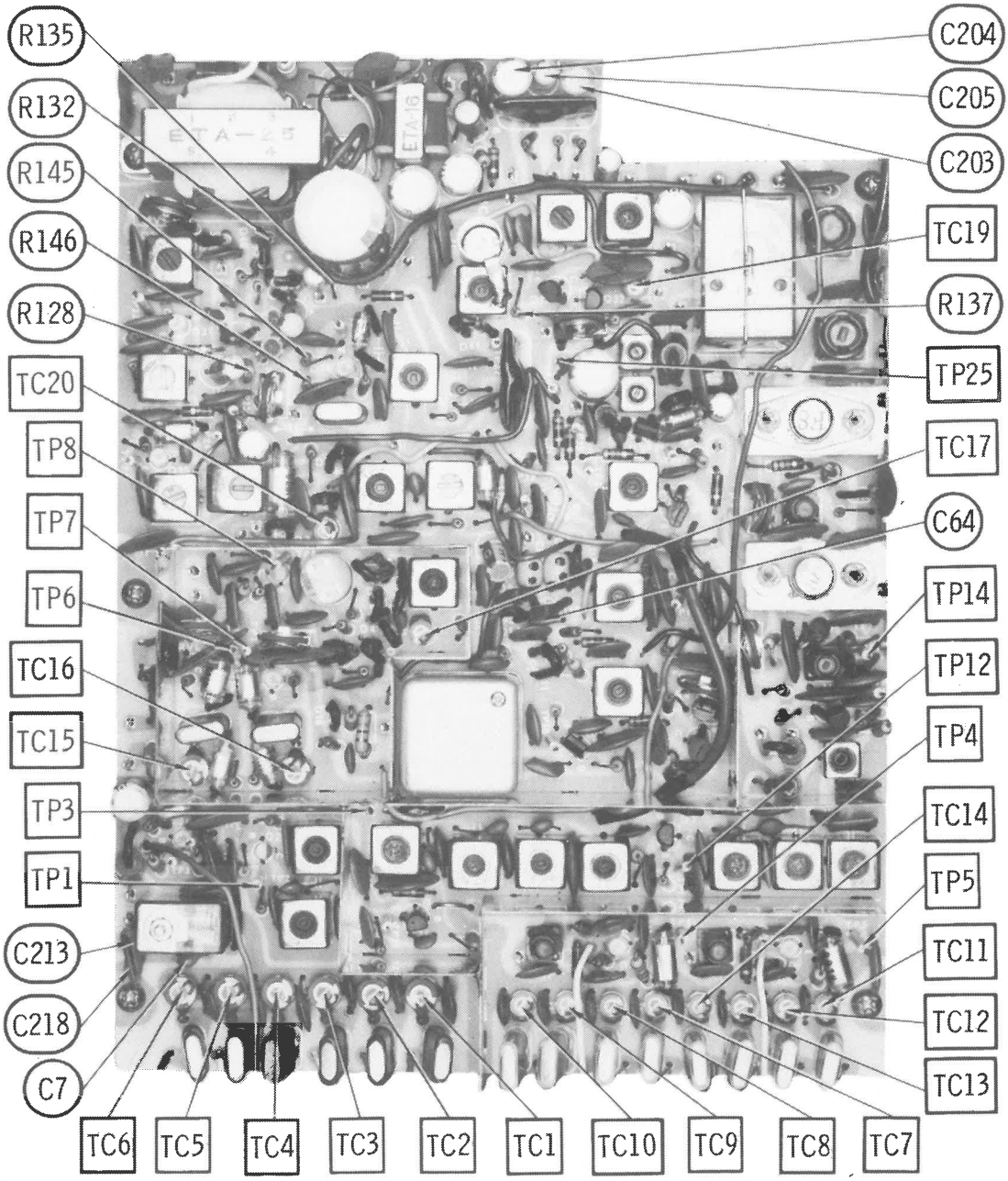
R135
R132
R145
R146
R128
TC20
TP8
TP7
TP6
TC16
TC15
TP3
TP1
C213
C218
C7
TC6
TC5
TC4
TC3
TC2
TC1
TC10
TC9
TC8
TC7
C204
C205
C203
TC19
R137
TP25
TC17
C64
TP14
TP12
TP4
TC14
TP5
TC11
TC12
TC13

TRANSMITTER ALIGNMENT

INDICATOR	ADJUST	REMARKS
AM Measure voltage to ground at TP12 with a DC VTVM.	L1, L2, L5,L6,L7 L8,L11, L12,L13, L14.	Set mode switch to AM. Key transmitter and adjust for MINIMUM voltage, approximately equal on all channels.
Connect an RF wattmeter between antenna connector and dummy load. Insert a 0-500ma DC ammeter in collector circuit of Q13 (RF Amp) at TP14.	L15, L16, L18, L19, TC18.	Adjust for maximum output. Readjust L19 to reduce DC input to 5 watts.
RF-METER ADJUSTMENT RF wattmeter as above.	RV6	Adjust for S-RF meter reading to agree with wattmeter.
AM MODULATION ADJUSTMENT Connect a modulation monitor across dummy load.	RV8	Key transmitter, speak into microphone, adjust to limit modulation to 100%.
SSB BALANCED MODULATOR ADJUSTMENT Measure voltage to ground at TP8 with a DC VTVM.	RV1, RV2.	Adjust for equal readings at TP8 with mode switch in USB (RV1) and LSB (RV2) (approximately 1.7V).
Connect an RF voltmeter across dummy load.	RV3, TC17.	Set mode switch to USB or LSB. Remove microphone plug from socket; key transmitter by shorting point A to ground. Adjust for MINIMUM RF output. Remove short key transmitter.
Connect an audio frequency generator to center connector of microphone socket. Set to 1kHz. Connect an RF wattmeter between antenna connector and dummy load.	L9, L10	Adjust output level of audio generator for RF output of about 1 watt. Adjust L9 and L10 for maximum output.
SSB BIAS ADJUSTMENT Measure voltage to ground at the junction of R48 and RV4 (RF Driver emitter circuit).	RV4	Set mode switch to USB or LSB. Adjust for 7.50V.
Measure voltage at junction of R51 and RV5. (RF Final Amp emitter circuit).	RV5	Adjust for 5.00V.
TVI ADJUSTMENT TV REC. (Ch. 2)	L20	Set mode switch to AM. Key transmitter; adjust for MINIMUM interference.

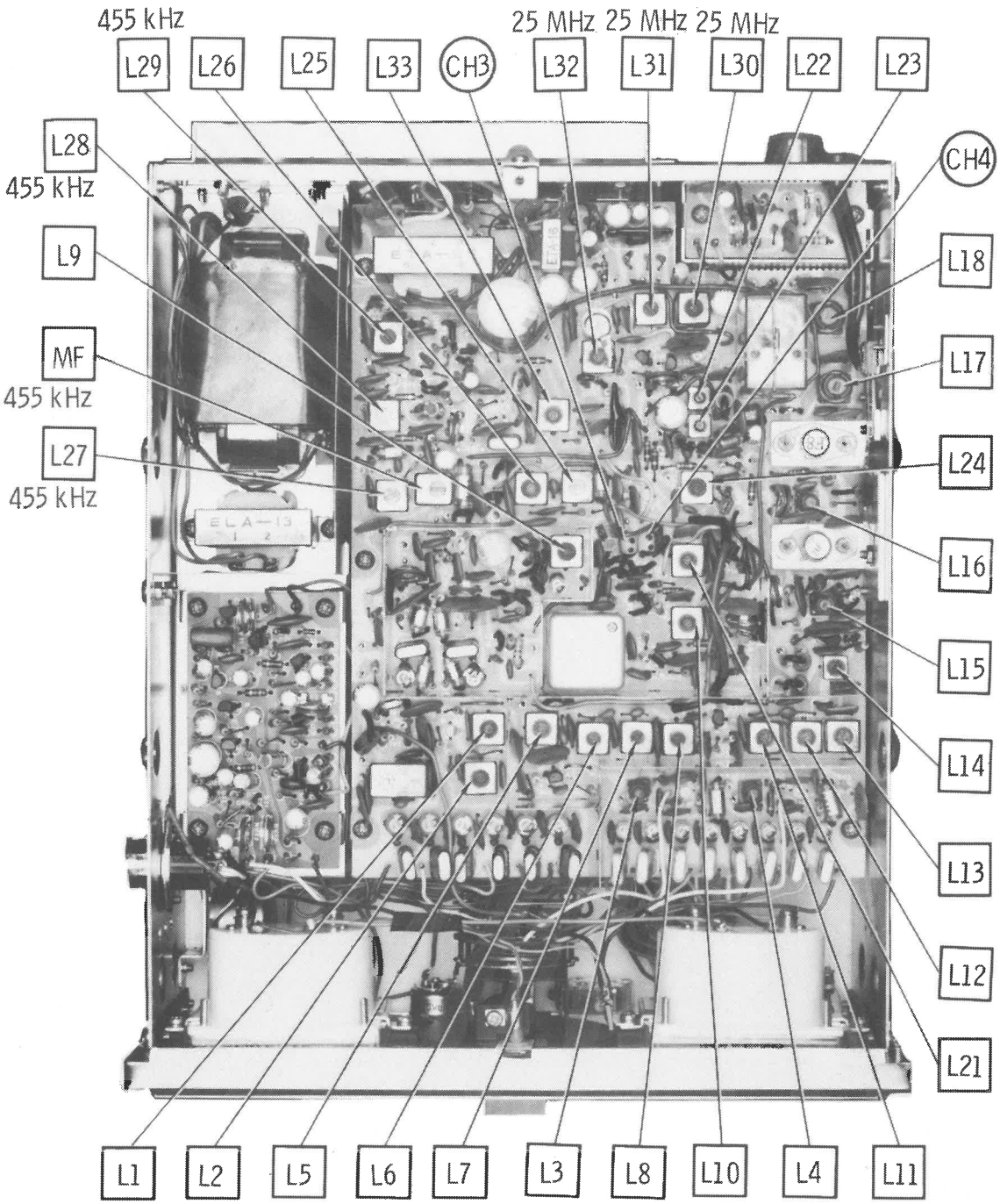
455 kHz
L29
L26
L25
L33
CH3
25 MHz
L32
25 MHz
L31
25 MHz
L30
L22
L23
L28
455 kHz
CH4
L9
L18
MF
455 kHz
L17
L27
455 kHz
L24
L16
L15
L14
L13
L12
L21
L1
L2
L5
L6
L7
L3
L8
L10
L4
L11

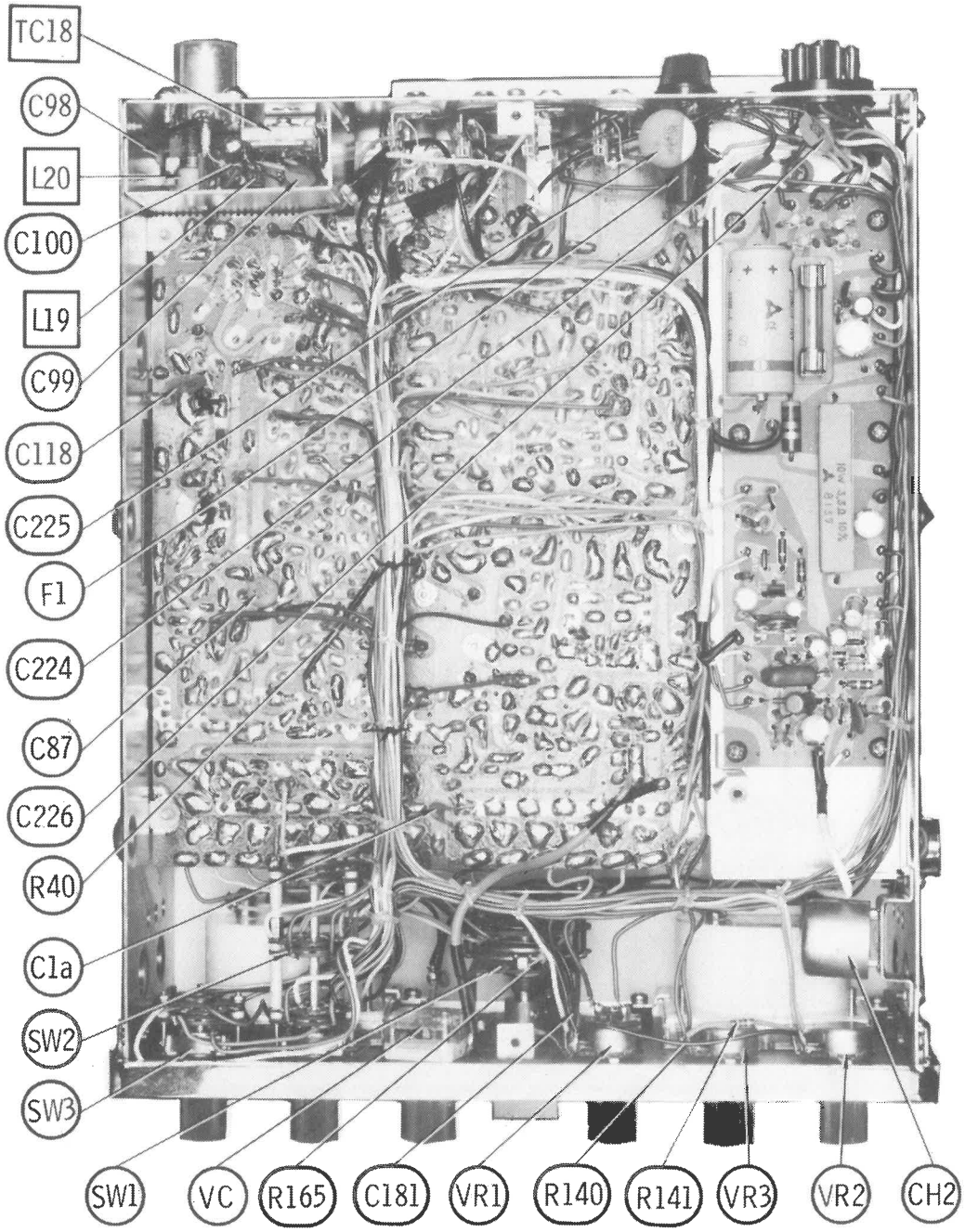
TC18
C98
L20
C100
L19
C99
C118
C225
F1
C224
C87
C226
R40
C1a
SW2
SW3
SW1
VC
R165
C181
VR1
R140
R141
VR3
VR2
CH2

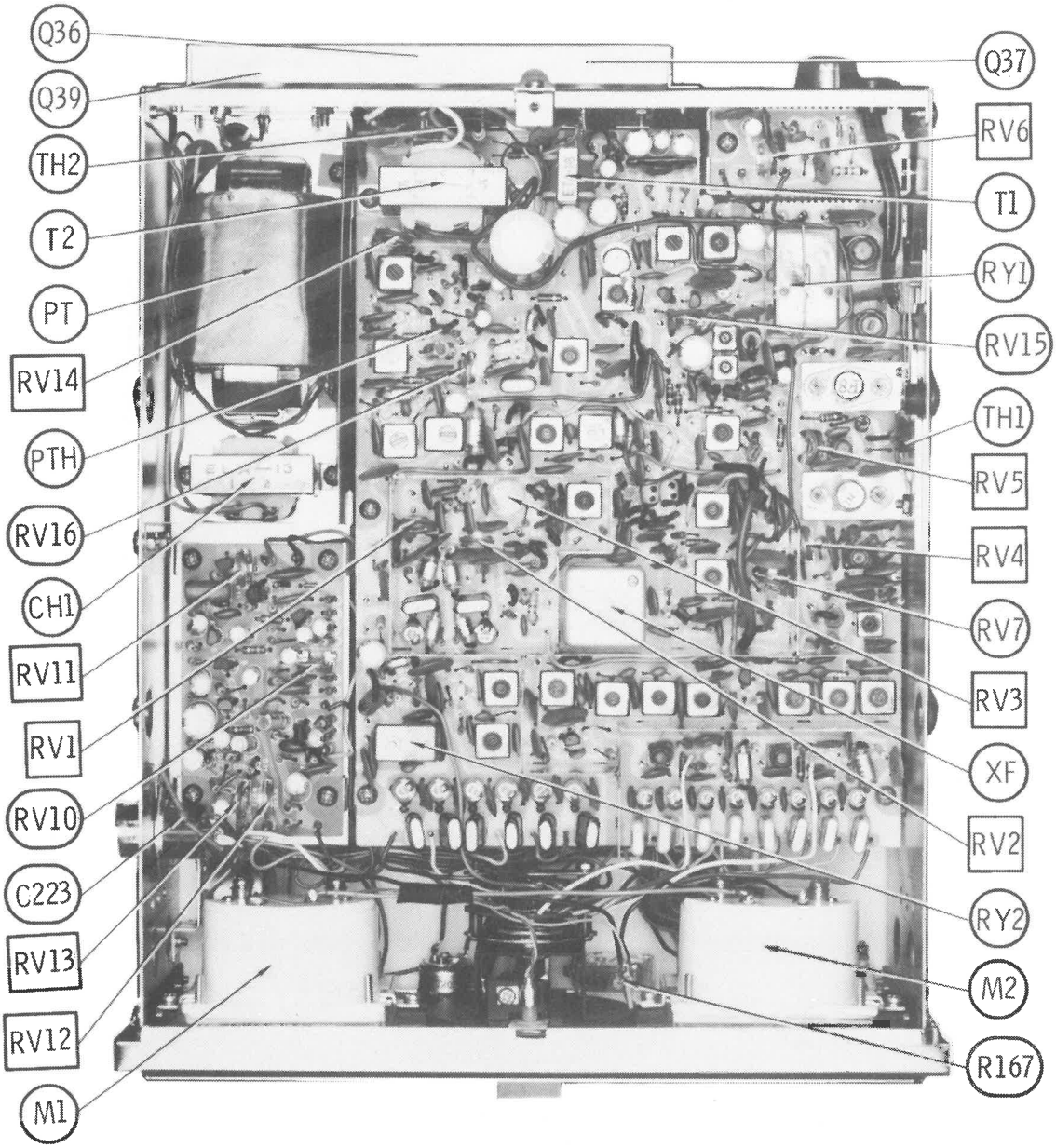
Q36
Q39
TH2
T2
PT
RV14
PTH
RV16
CH1
RV11
RV1
RV10
C223
RV13
RV12
M1
Q37
RV6
T1
RY1
RV15
TH1
RV5
RV4
RV7
RV3
XF
RV2
RY2
M2
R167

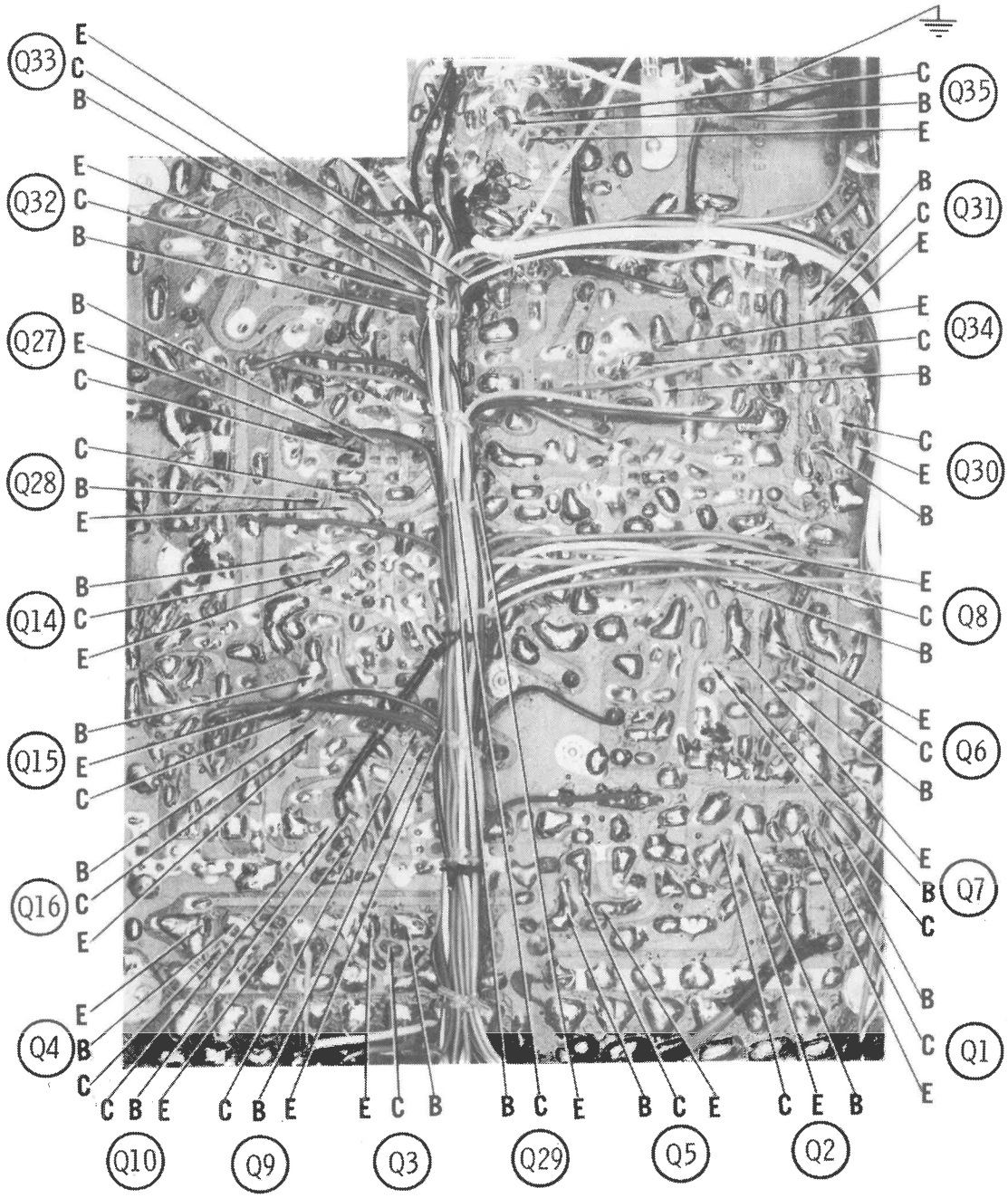
Q33
E
C
B
Q32
E
C
B
Q27
B
E
C
Q28
C
B
E
Q14
B
C
E
Q15
B
E
C
Q16
B
C
E
Q4
E
B
C
Q35
C
B
E
Q31
B
C
E
Q34
E
C
B
Q30
C
E
B
Q8
E
C
B
Q6
E
C
B
Q7
E
B
C
Q1
B
C
E
Q10
C B E
Q9
C B E
Q3
E C B
Q29
B C E
Q5
B C E
Q2
C E B

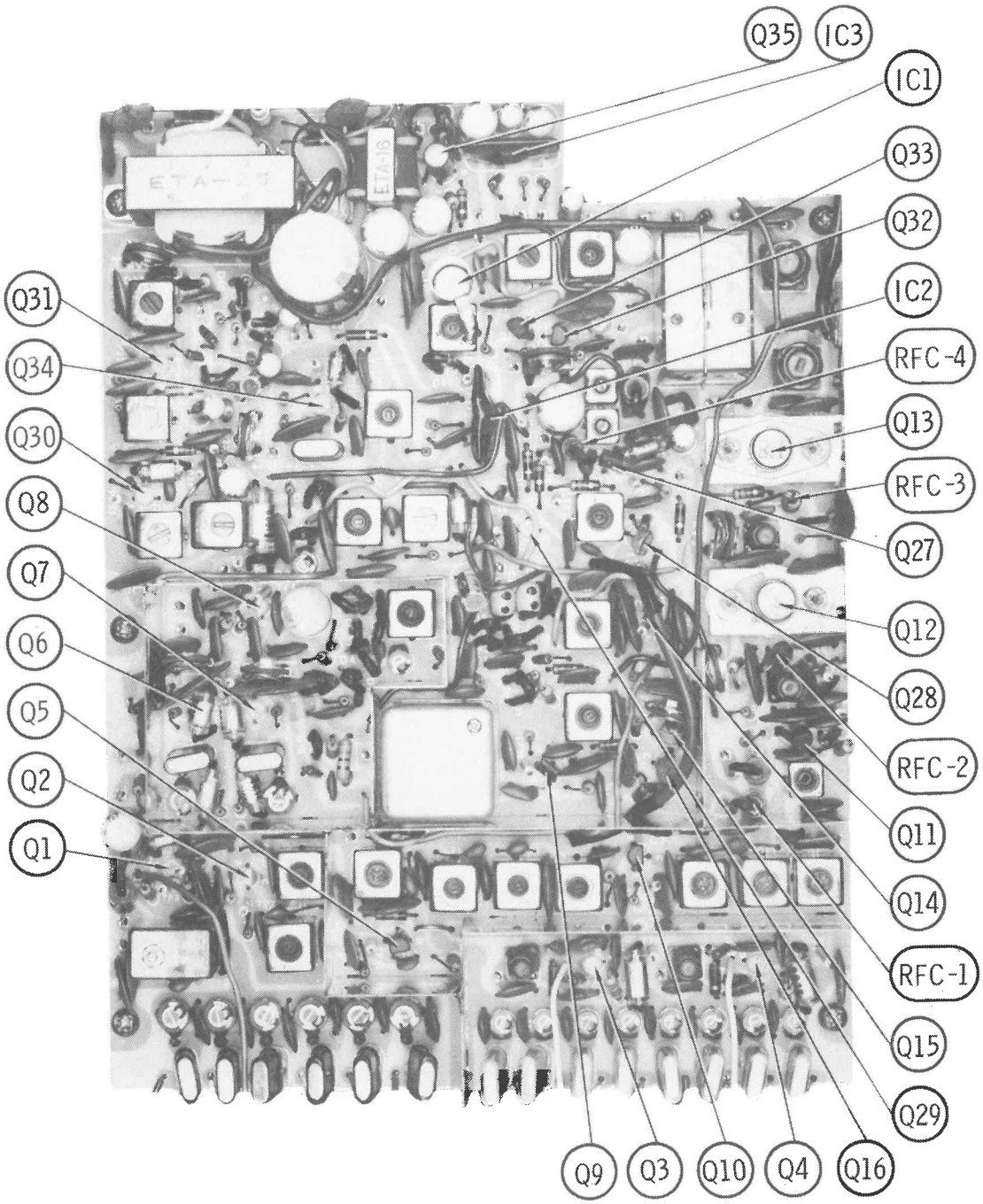
Q35
IC3
IC1
Q33
Q32
IC2
RFC-4
Q13
RFC-3
Q27
Q12
Q28
RFC-2
Q11
Q14
RFC-1
Q15
Q29
Q16
Q4
Q10
Q3
Q9
Q1
Q2
Q5
Q6
Q7
Q8
Q30
Q34
Q31

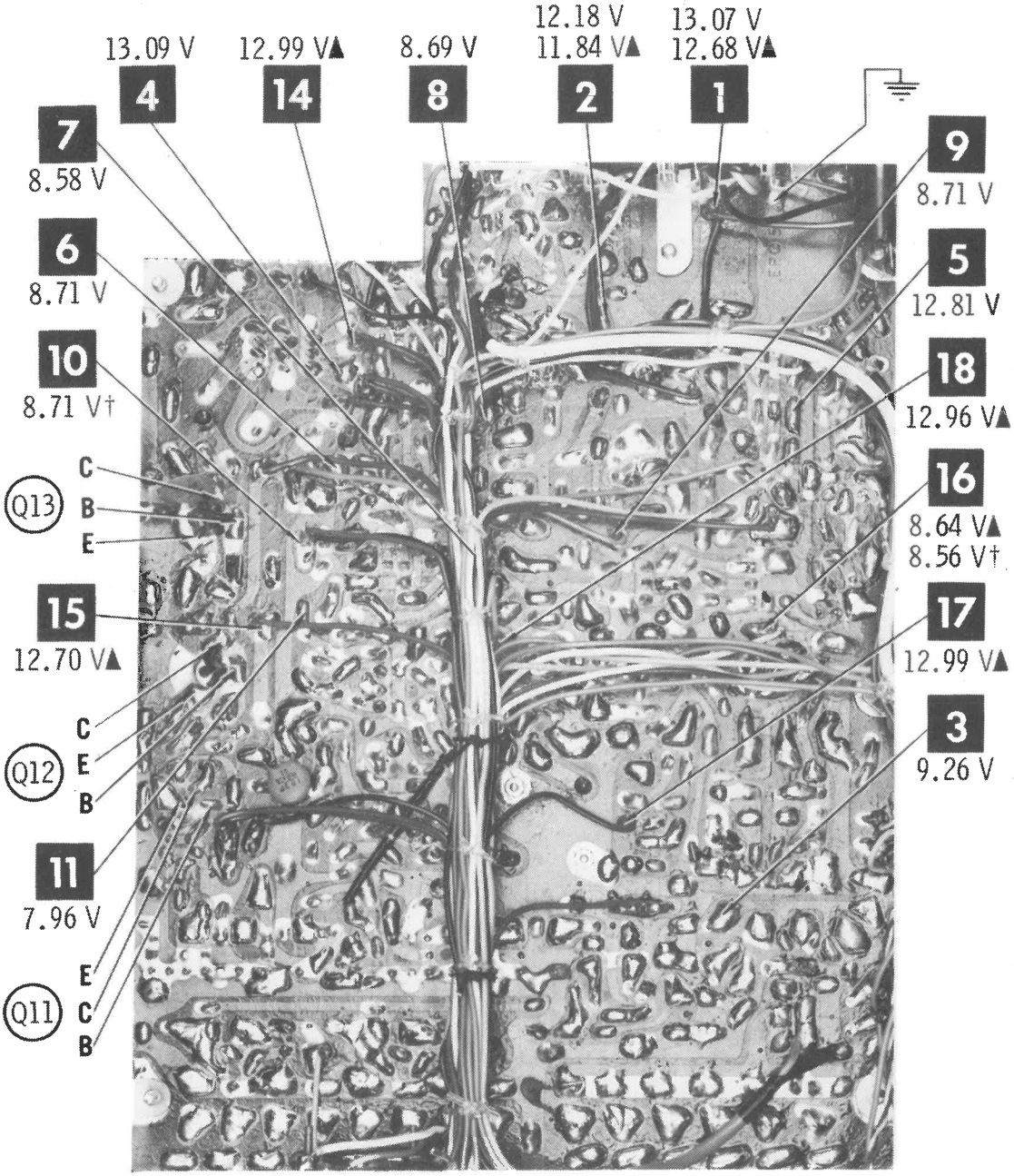

▲TRANSMIT
†SSB

A Howard W. Sams CIRCUITRACE Photo

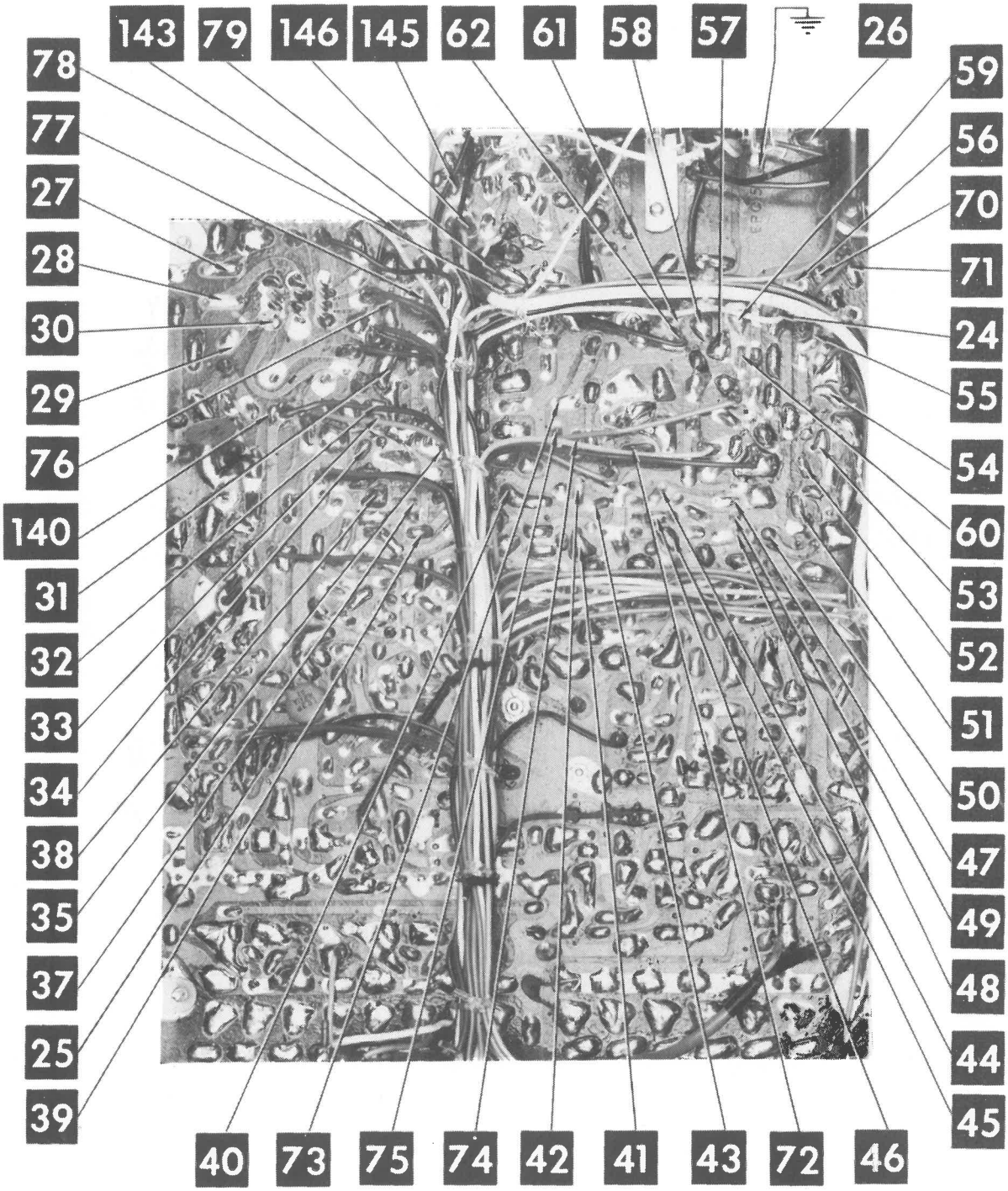

A Howard W. Sams CIRCUITRACE® Photo

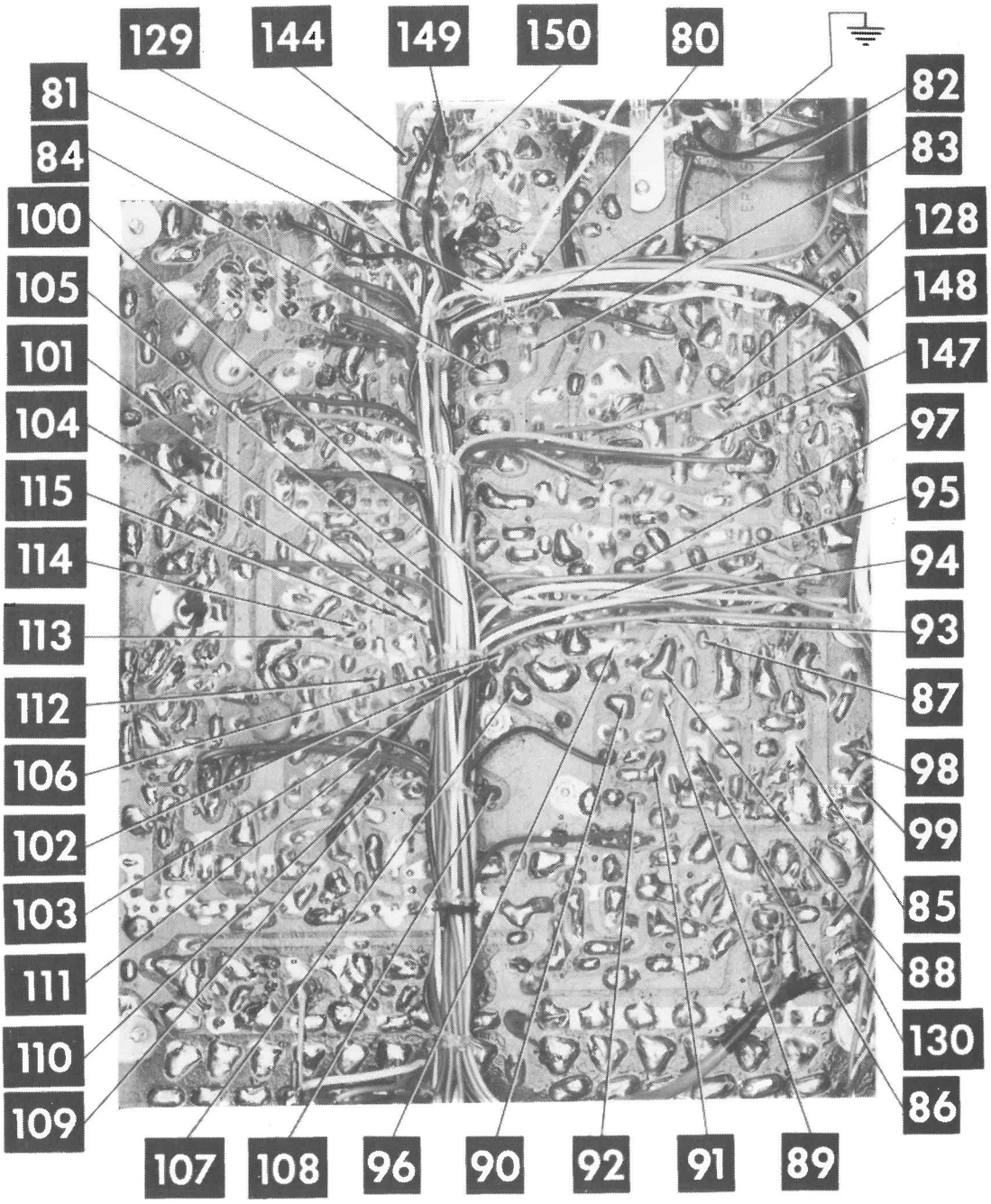

A Howard W. Sams CIRCUITRACE® Photo

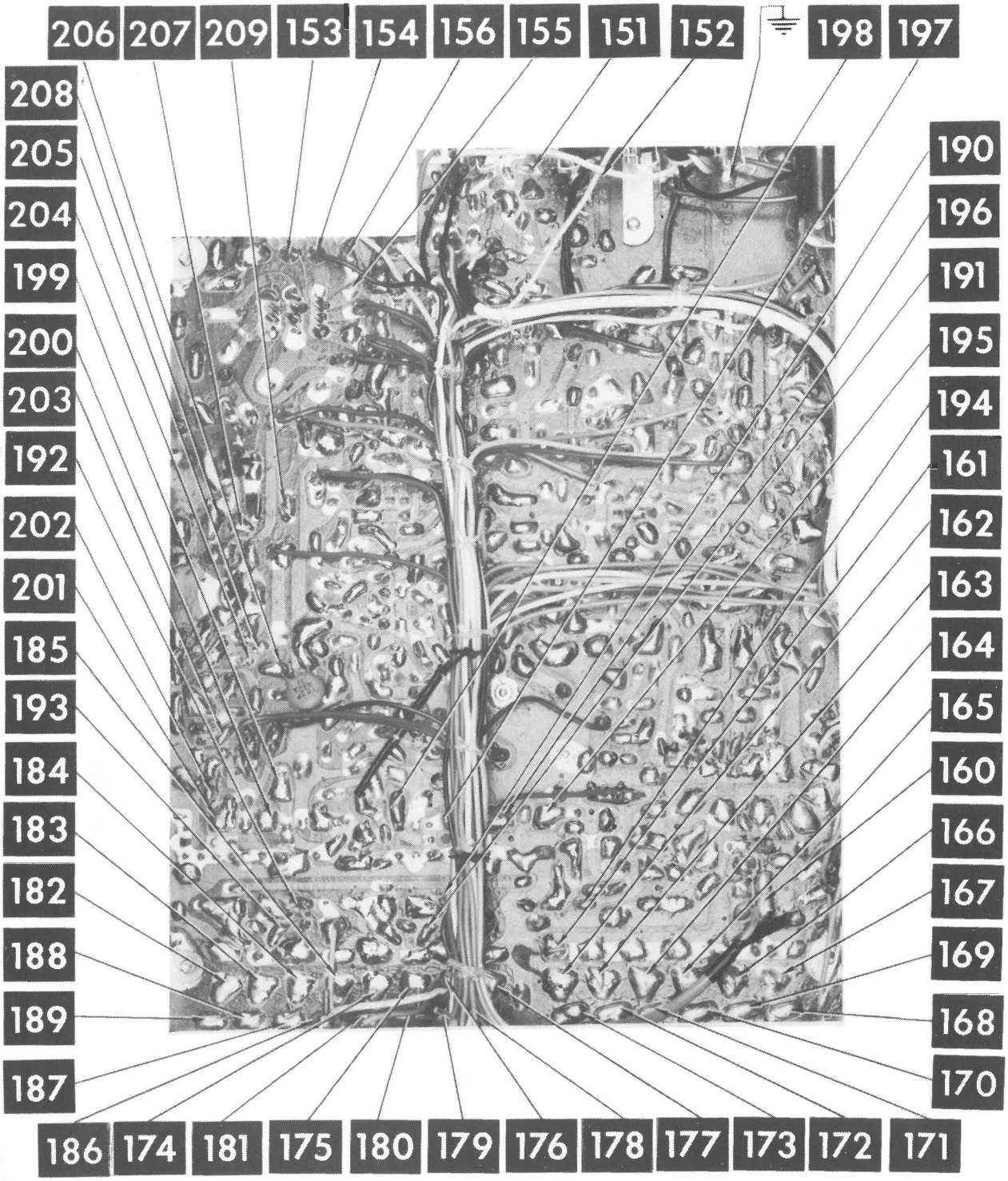

A Howard W. Sams CIRCUITRACE® Photo

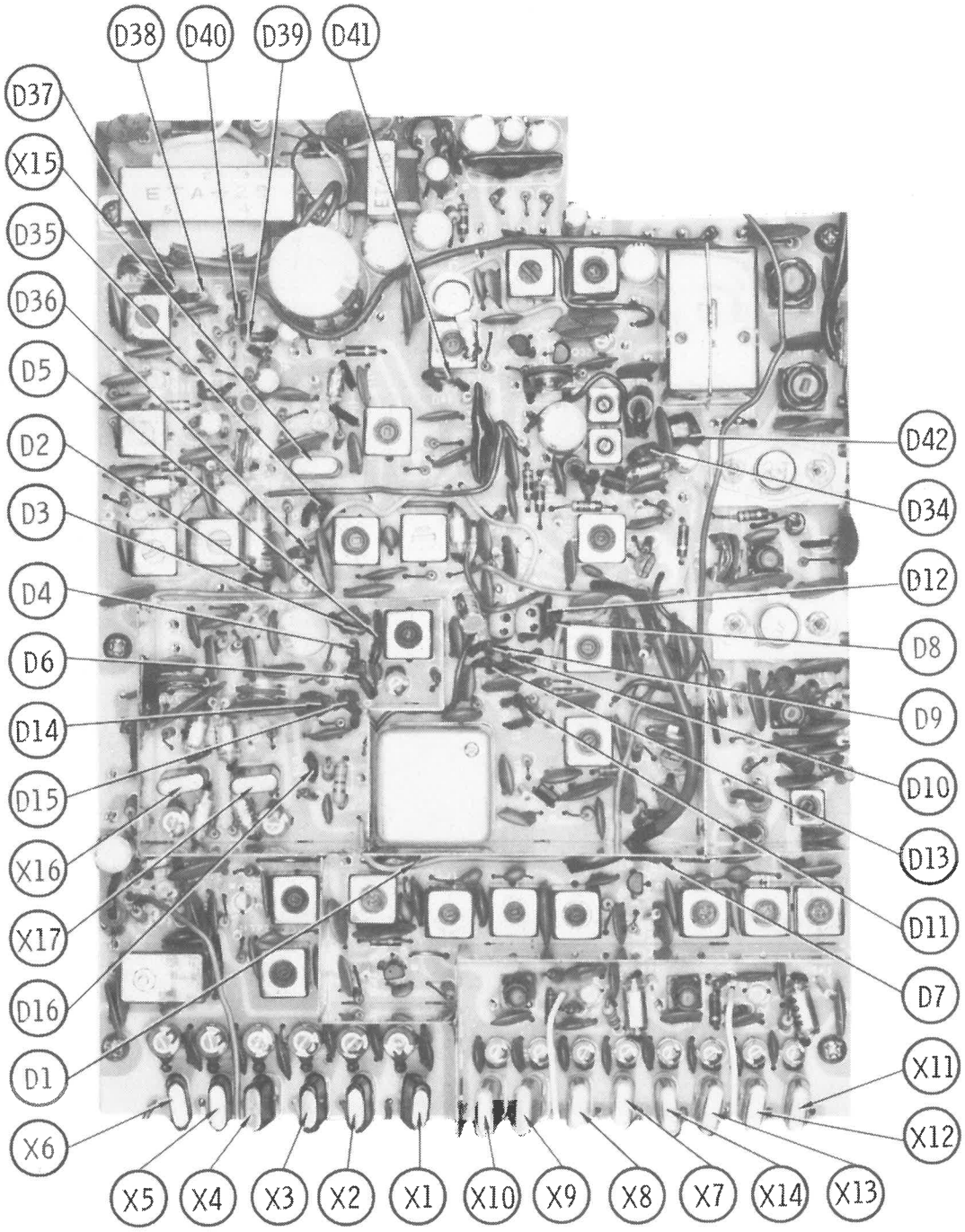
D38
D40
D39
D41
D37
X15
D35
D36
D5
D2
D3
D4
D6
D14
D15
X16
X17
D16
D1
X6
X5
X4
X3
X2
X1
X10
X9
X8
X7
X14
X13
X12
X11
D7
D11
D13
D10
D9
D8
D12
D34
D42

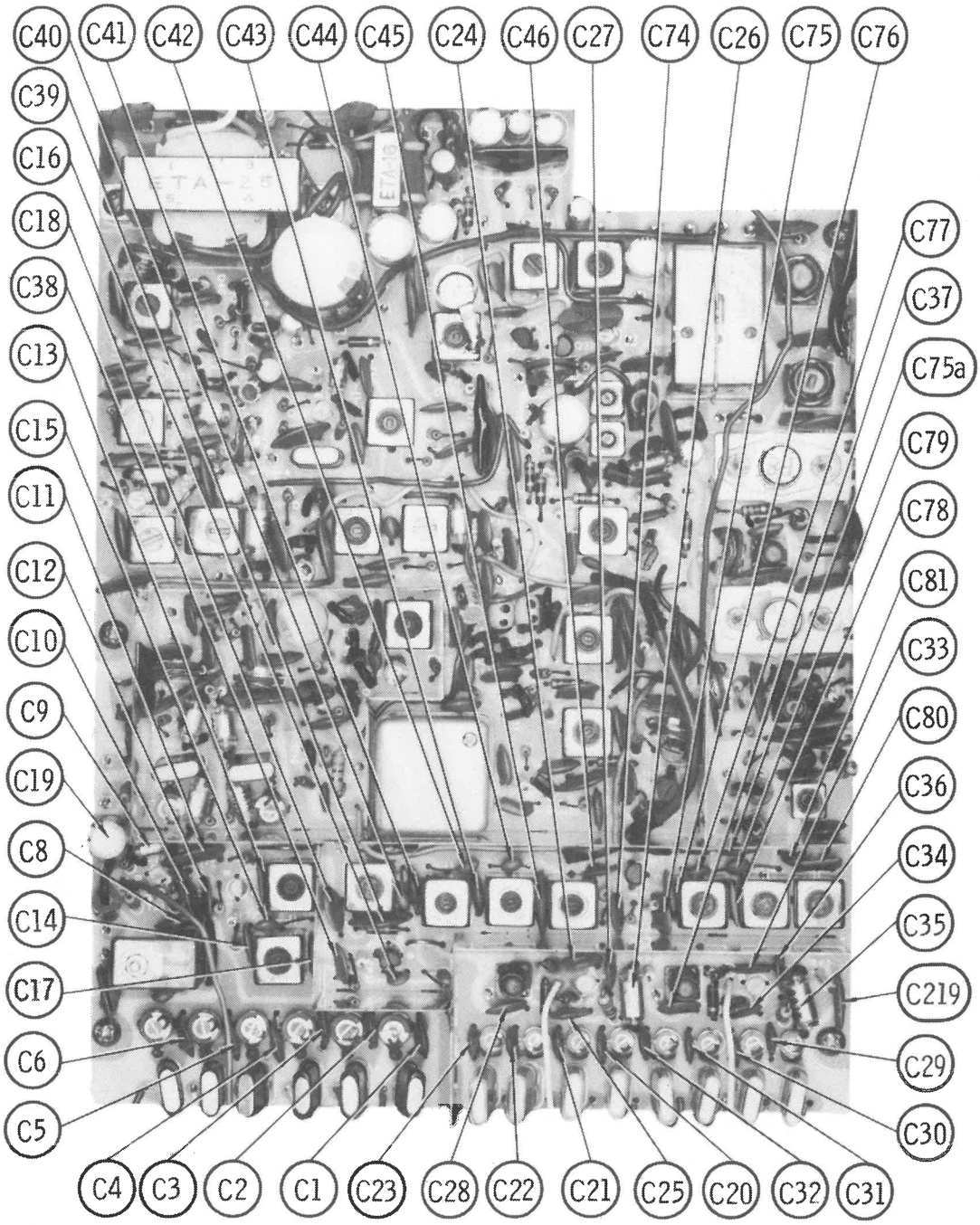
C40
C41
C42
C43
C44
C45
C24
C46
C27
C74
C26
C75
C76
C39
C16
C18
C38
C13
C15
C11
C12
C10
C9
C19
C8
C14
C17
C6
C5
C77
C37
C75a
C79
C78
C81
C33
C80
C36
C34
C35
C219
C29
C30
C4
C3
C2
C1
C23
C28
C22
C21
C25
C20
C32
C31

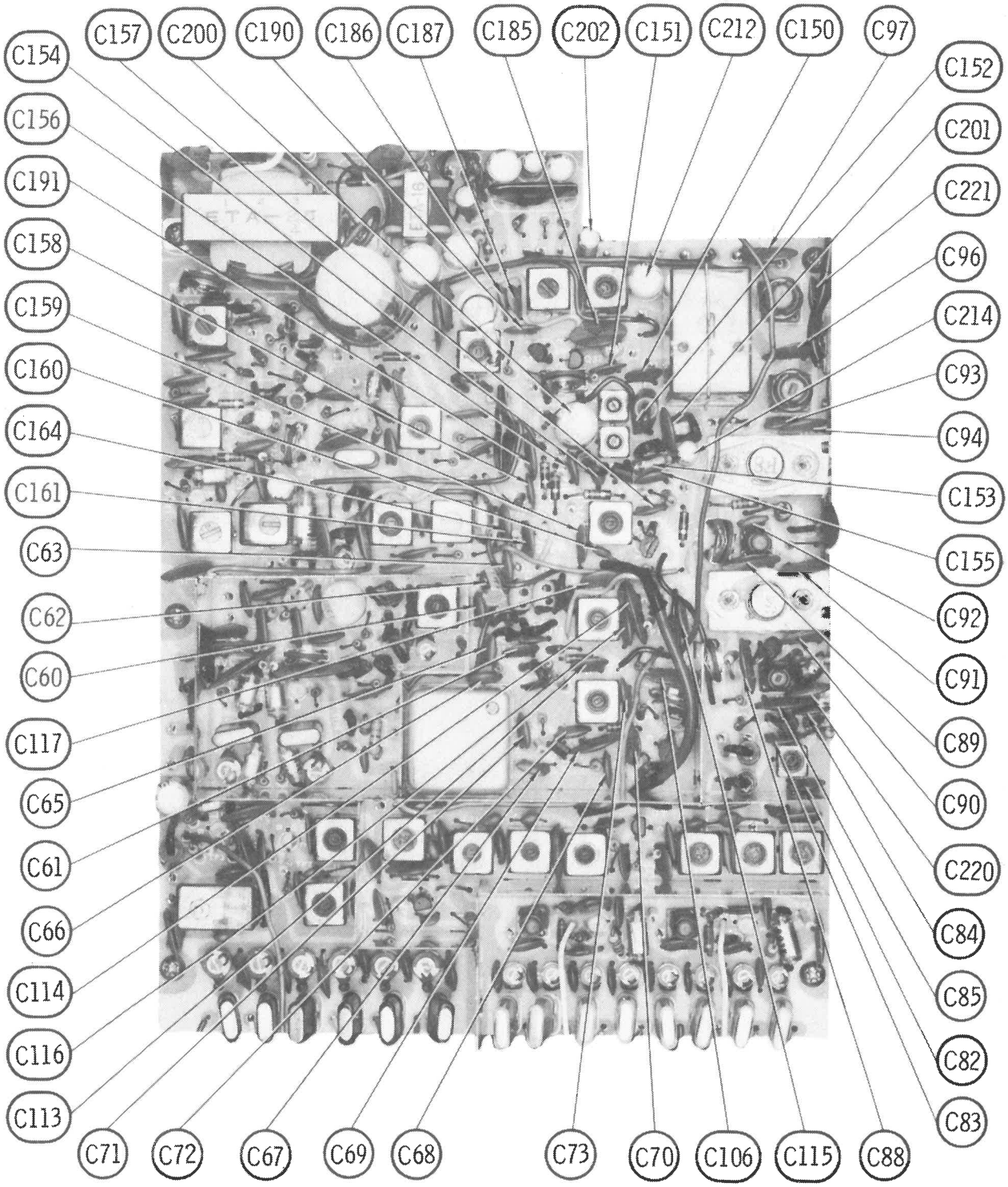
C157
C200
C190
C186
C187
C185
C202
C151
C212
C150
C97
C154
C156
C191
C158
C159
C160
C164
C161
C63
C62
C60
C117
C65
C61
C66
C114
C116
C113
C152
C201
C221
C96
C214
C93
C94
C153
C155
C92
C91
C89
C90
C220
C84
C85
C82
C83
C71
C72
C67
C69
C68
C73
C70
C106
C115
C88

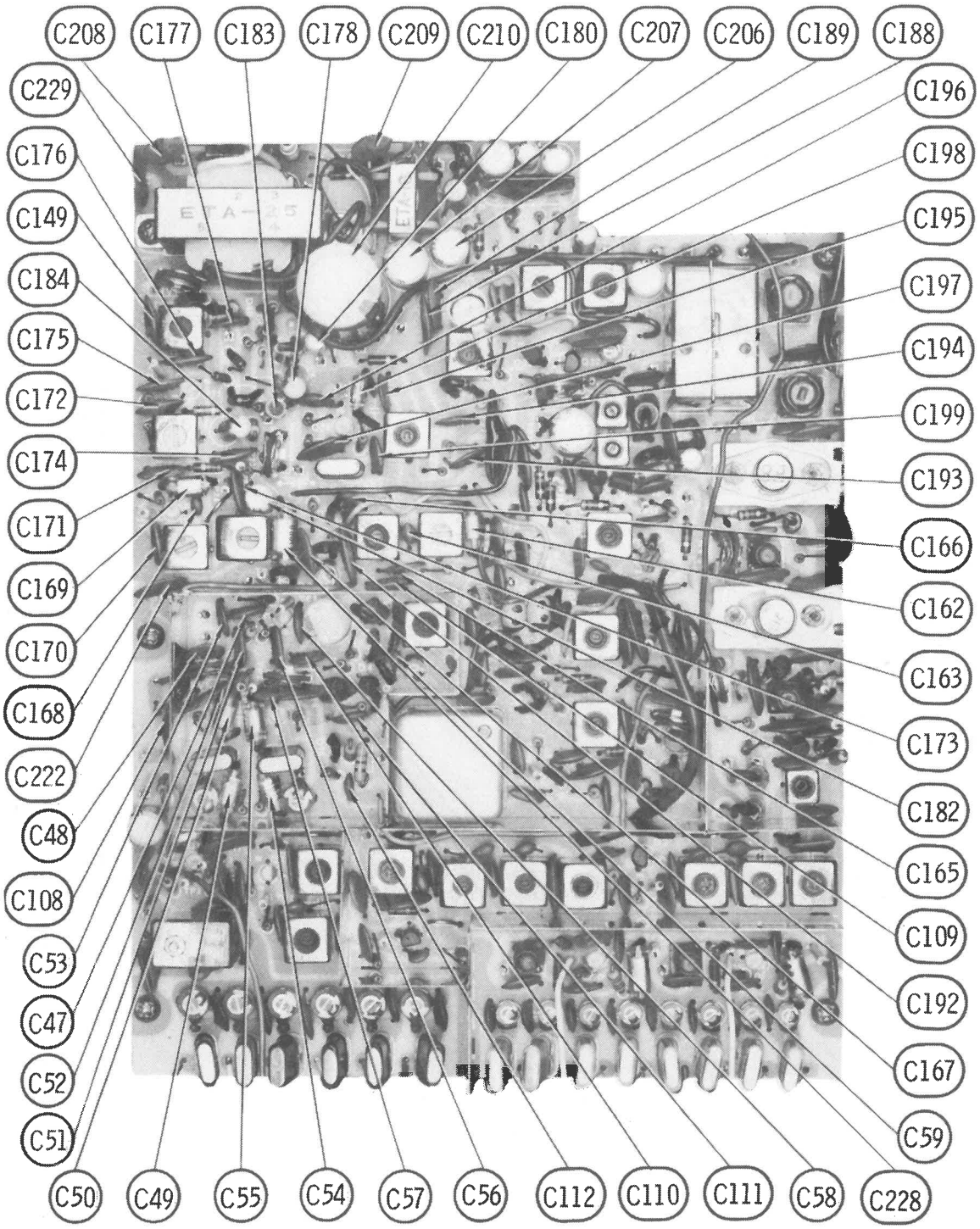
C208
C177
C183
C178
C209
C210
C180
C207
C206
C189
C188
C229
C196
C176
C198
C149
C195
C184
C197
C175
C194
C172
C199
C174
C193
C171
C166
C169
C162
C170
C163
C168
C173
C222
C182
C48
C165
C108
C109
C53
C192
C47
C167
C52
C59
C51
C50
C49
C55
C54
C57
C56
C112
C110
C111
C58
C228

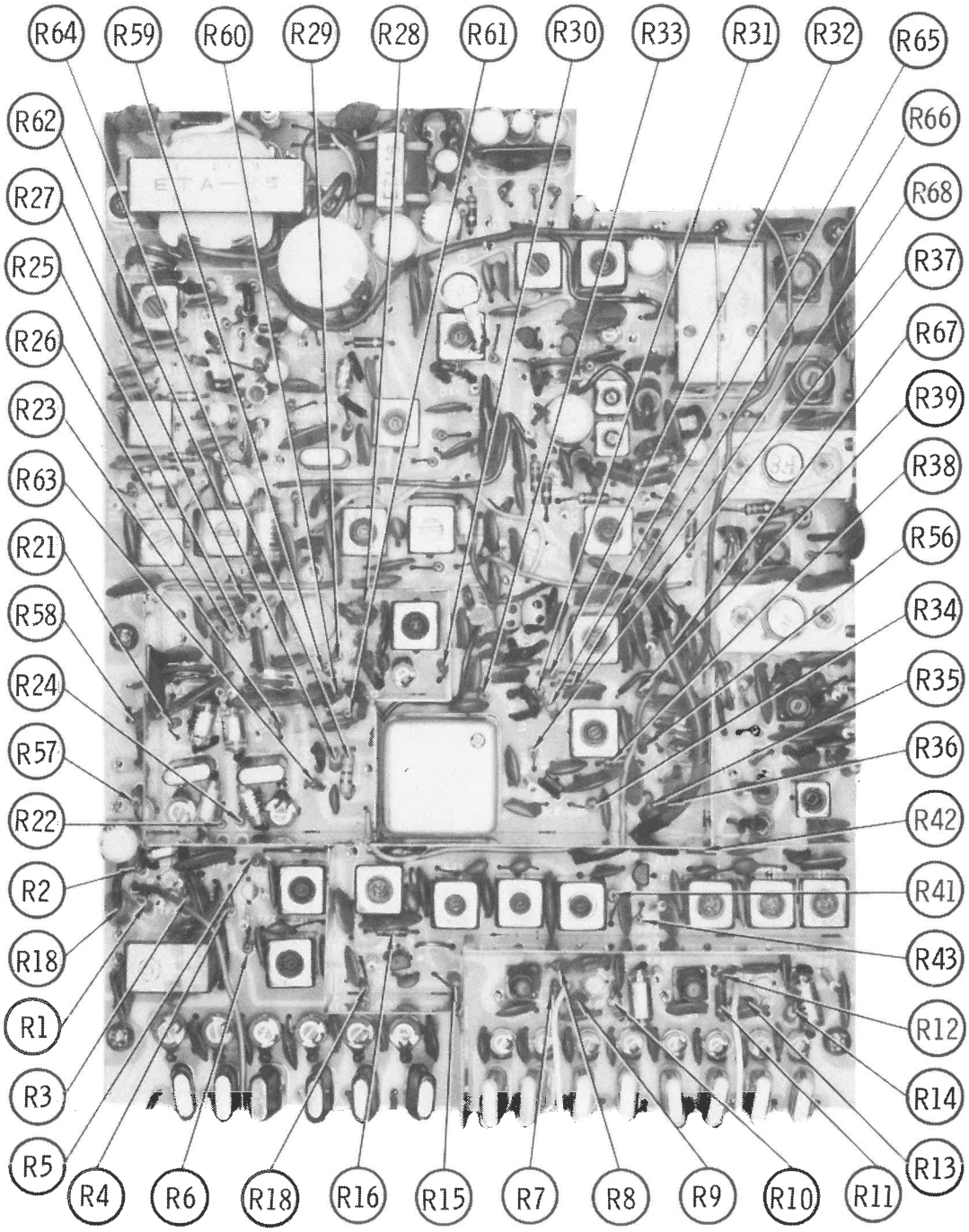
R64
R59
R60
R29
R28
R61
R30
R33
R31
R32
R65
R62
R66
R27
R68
R25
R37
R26
R67
R23
R39
R63
R38
R21
R56
R58
R34
R24
R35
R57
R36
R22
R42
R2
R41
R18
R43
R1
R12
R3
R14
R5
R13
R4
R6
R18
R16
R15
R7
R8
R9
R10
R11

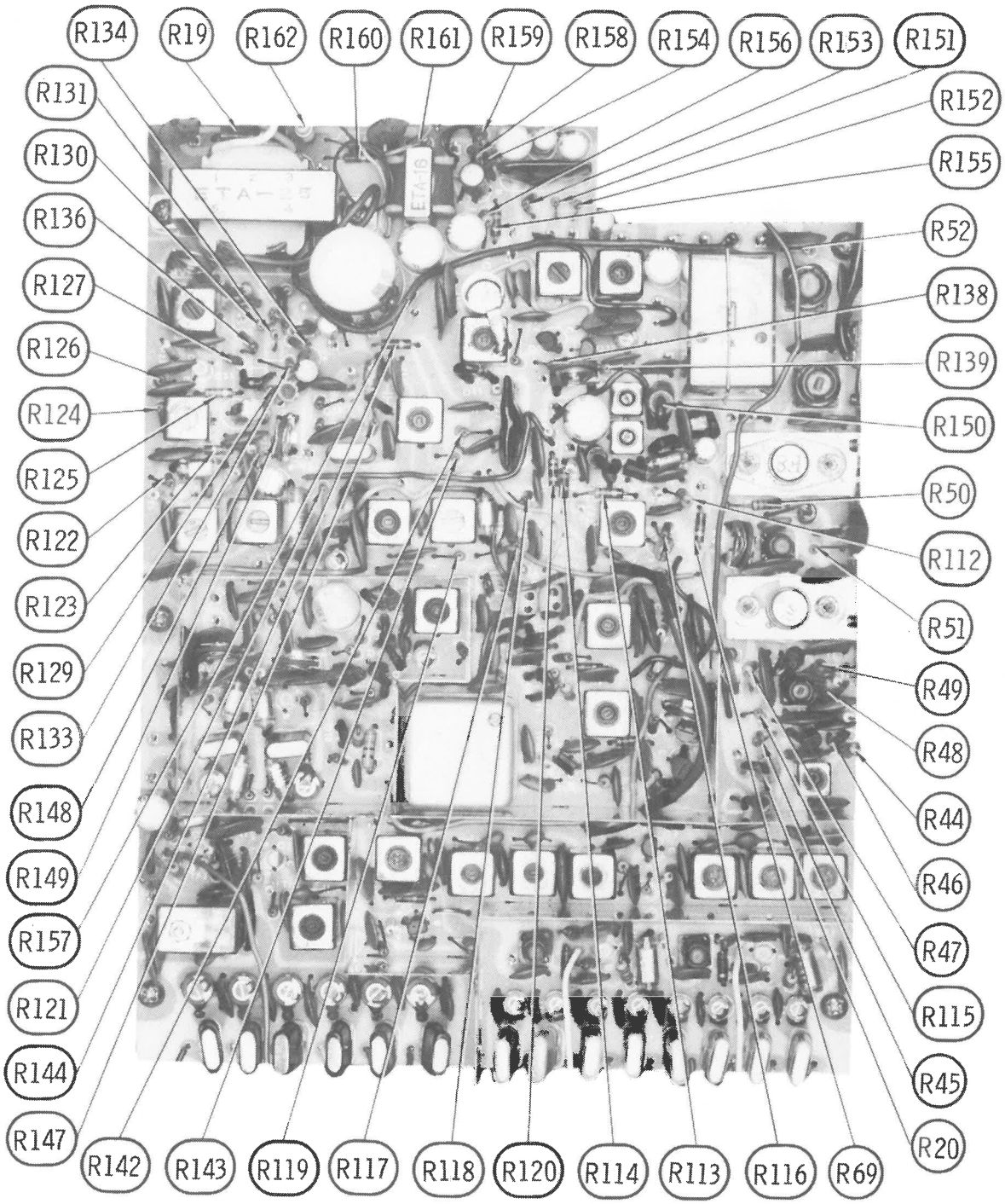
R134
R19
R162
R160
R161
R159
R158
R154
R156
R153
R151
R131
R152
R130
R155
R136
R52
R127
R138
R126
R139
R124
R150
R125
R50
R122
R112
R123
R51
R129
R49
R133
R48
R148
R44
R149
R46
R157
R47
R121
R115
R144
R45
R147
R20
R142
R143
R119
R117
R118
R120
R114
R113
R116
R69

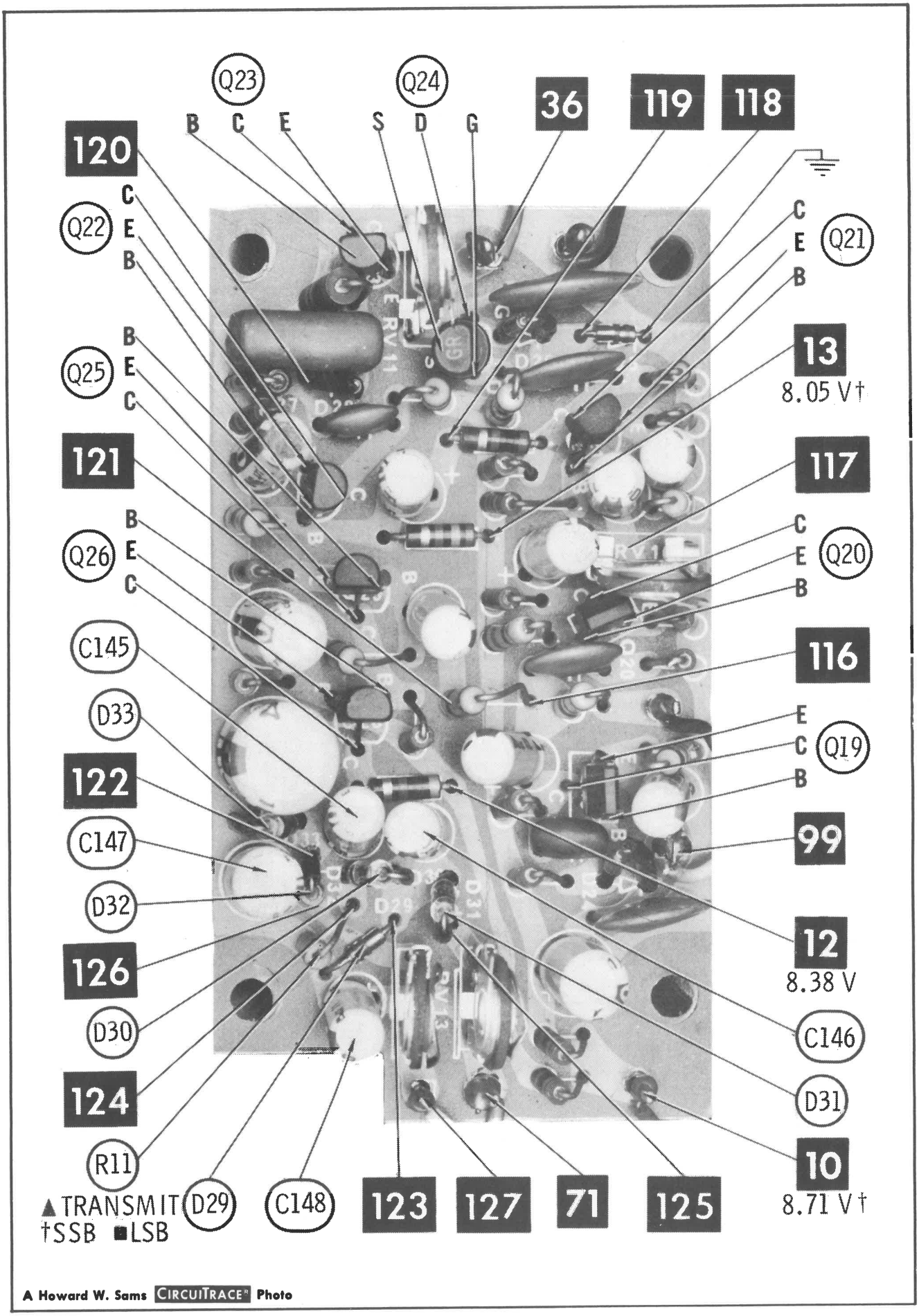

A Howard W. Sams CIRCUITRACE® Photo

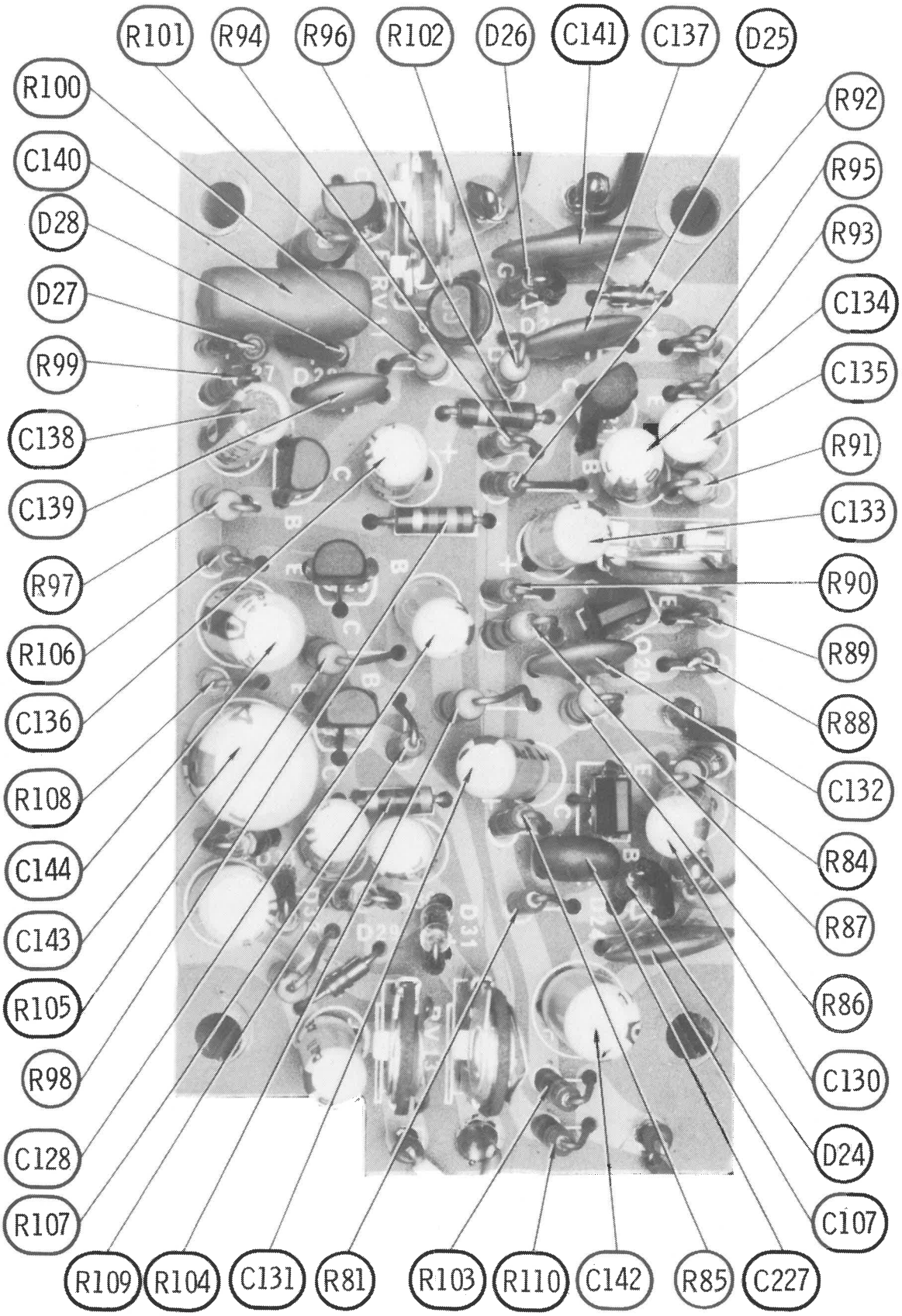
R101
R94
R96
R102
D26
C141
C137
D25
R100
C140
D28
D27
R99
C138
C139
R97
R106
C136
R108
C144
C143
R105
R98
C128
R107
R92
R95
R93
C134
C135
R91
C133
R90
R89
R88
C132
R84
R87
R86
C130
D24
C107
R109
R104
C131
R81
R103
R110
C142
R85
C227

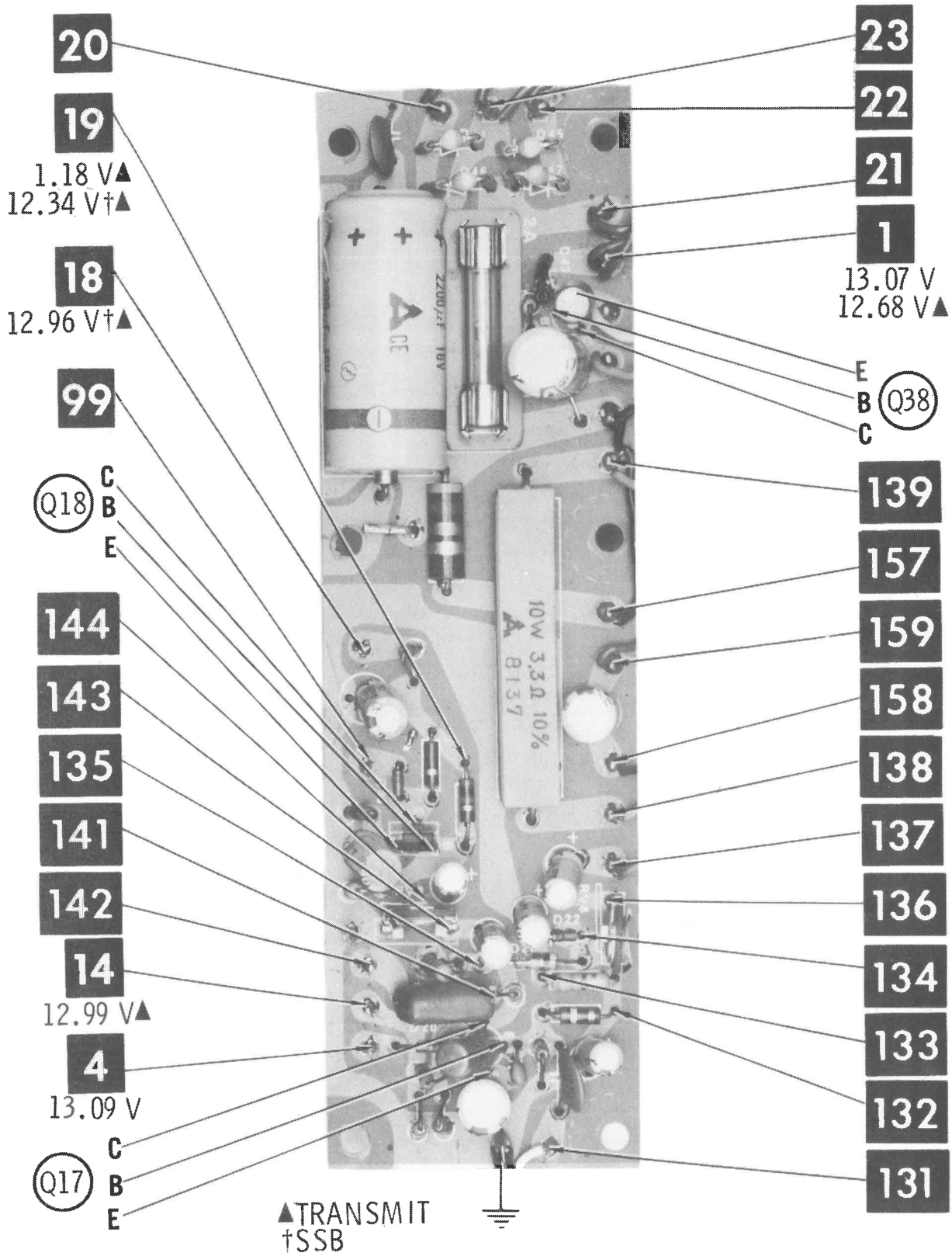

A Howard W. Sams CIRCUITRACE® Photo

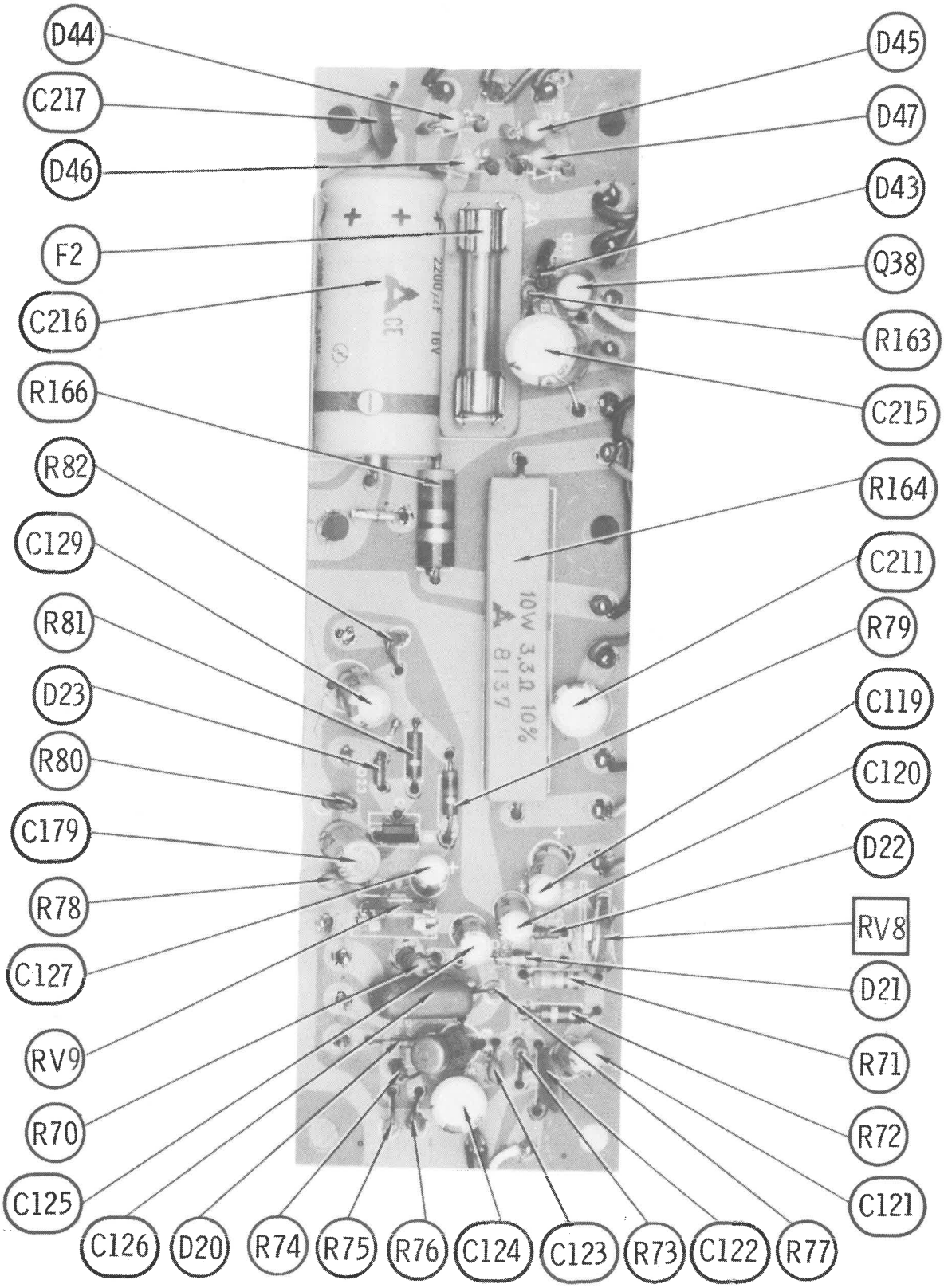
D44
C217
D46
F2
C216
R166
R82
C129
R81
D23
R80
C179
R78
C127
RV9
R70
C125
C126
D20
R74
R75
R76
C124
C123
R73
C122
R77
D45
D47
D43
Q38
R163
C215
R164
C211
R79
C119
C120
D22
RV8
D21
R71
R72
C121
2200µF 16V
10W 3.3Ω 10%
8137

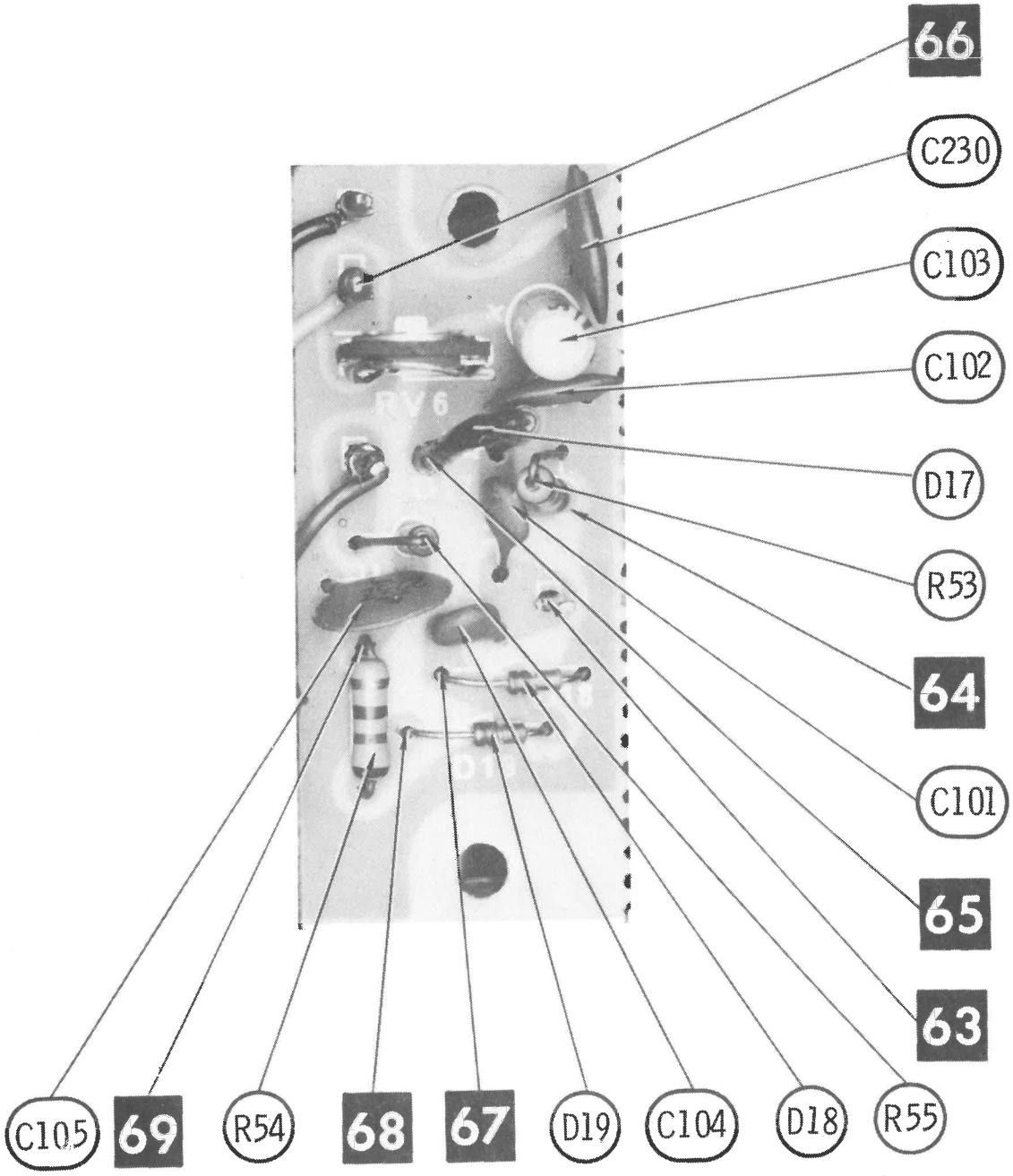

A Howard W. Sams CIRCUITRACE® Photo

PARTS LIST AND DESCRIPTION

(When ordering parts, state Model, Part Number, and Description.)

SEMICONDUCTORS

ITEM No.	TYPE / MFGR. No./PART No.	REPLACEMENT DATA						
		GENERAL ELECTRIC PART No	INTERNATIONAL RECTIFIER PART No.	MALLORY PART No.	MOTOROLA PART No.	RCA PART No.	SPRAGUE PART No.	SYLVANIA PART No.
D1	AW-01-09/2150-17 (9 V Zener)	GEZD-9.1(10)	Z1208 (10)	PTC505 (10)	HEPZ0412(10)	SK3060 (10)	RT240 (10)	ECG 139 (10)
D2	AW-01-08/2064-17 (8 V Zener)	GE-X11 (10)	Z1208 (10)	ZB8.2 (10)	HEPZ0411(10)	SK3059 (10)	RT239 (10)	ECG 5072 (10)
D3	1N60P/2151-17 (12)	1N60	1N60	PTC206	HEP135	SK3088		ECG 109
D4	1N60P/2151-17 (12)	1N60	1N60	PTC206	HEP135	SK3088		ECG 109
D5	1N60P/2151-17 (12)	1N60	1N60	PTC206	HEP135	SK3088		ECG 109
D6	1N60P/2151-17 (12)	1N60	1N60	PTC206	HEP135	SK3088		ECG 109
D7	M1-301/2065-17	GE-300	D200	PTC214	HEPR0602	SK3100	RT218	ECG 177
D8	1S953/2066-17	GE-300	D200	PTC214	HEPR0602	SK3100	RT218	ECG 177
D9	1S953/2066-17	GE-300	D200	PTC214	HEPR0602	SK3100	RT218	ECG 177
D10	1S953/2066-17	GE-300	D200	PTC214	HEPR0602	SK3100	RT218	ECG 177
D11	1S953/2066-17	GE-300	D200	PTC214	HEPR0602	SK3100	RT218	ECG 177
D12	1S953/2066-17	GE-300	D200	PTC214	HEPR0602	SK3100	RT218	ECG 177
D13	1S953 2066-17	GE-300	D200	PTC214	HEPR0602	SK3100	RT218	ECG 177
D14	M1-301/2065-17	GE-300	D200	PTC214	HEPR0602	SK3100	RT218	ECG 177
D15	1S983	GE-300	D200	PTC214	HEPR0602	SK3100	RT218	ECG 177
D16	M1-301/2065-17	GE-300	D200	PTC214	HEPR0602	SK3100	RT218	ECG 177
D17	1N60/1000-17	1N60	1N60	PTC206	HEP135	SK3088		ECG 109
D18	1S953/2066-17	GE-300	D200	PTC214	HEPR0602	SK3100	RT218	ECG 177
D19	1S953/2066-17	GE-300	D200	PTC214	HEPR0602	SK3100	RT218	ECG 177
D20	1S953/2066-17	GE-300	D200	PTC214	HEPR0602	SK3100	RT218	ECG 177
D21	1N60/1000-17	1N60	1N60	PTC206	HEP135	SK3088		ECG 109
D22	1S953/2066-17	GE-300	D200	PTC214	HEPR0602	SK3100	RT218	ECG 177
D23	1S953/2066-17	GE-300	D200	PTC214	HEPR0602	SK3100	RT218	ECG 177
D24	1S953/2066-17	GE-300	D200	PTC214	HEPR0602	SK3100	RT218	ECG 177
D25	1S953/2066-17	GE-300	D200	PTC214	HEPR0602	SK3100	RT218	ECG 177
D26	1S953/2066-17	GE-300	D200	PTC214	HEPR0602	SK3100	RT218	ECG 177
D27	1N60/1000-17	1N60	1N60	PTC206	HEP135	SK3088		ECG 109
D28	1S953/2066-17	GE-300	D200	PTC214	HEPR0602	SK3100	RT218	ECG 177
D29	1S953/2066-17	GE-300	D200	PTC214	HEPR0602	SK3100	RT218	ECG 177
D30	1N60/1000-17	1N60	1N60	PTC206	HEP135	SK3088		ECG 109
D31	1N60/1000-17	1N60	1N60	PTC206	HEP135	SK3088		ECG 109
D32	1N60/1000-17	1N60	1N60	PTC206	HEP135	SK3088		ECG 109
D33	1N60/1000-17	1N60	1N60	PTC206	HEP135	SK3088		ECG 109
D34	1S953/2066-17	GE-300	D200	PTC214	HEPR0602	SK3100	RT218	ECG 177
D35	1S953/2066-17	GE-300	D200	PTC214	HEPR0602	SK3100	RT218	ECG 177
D36	1S953/2066-17	GE-300	D200	PTC214	HEPR0602	SK3100	RT218	ECG 177
D37	1N60/1000-17	1N60	1N60	PTC206	HEP135	SK3088		ECG 109
D38	1N60/1000-17	1N60	1N60	PTC206	HEP135	SK3088		ECG 109
D39	1N60/1000-17	1N60	1N60	PTC206	HEP135	SK3088		ECG 109
D40	1N60/1000-17	1N60	1N60	PTC206	HEP135	SK3088		ECG 109
D41	1N60/1000-17	1N60	1N60	PTC206	HEP135	SK3088		ECG 109
D42	AW-01-08/2064-17 (8 V Zener)	GE-X11 (10)	Z1208 (10)	ZB8.2 (10)	HEPZ0411(10)	SK3059 (10)	RT239 (10)	ECG 5072 (10)
D43	RD-13AN/2021-17 (13 V Zener)		Z1212 (10)	PTC508 (10)	HEPZ0416(10)	SK3093 (10)	RT234 (10)	ECG 5022 (10)
D44	V06BX4/2031-17	GE-504A	8D4 or 5A4D	PTC201 or PTC202	HEPR0053	SK3016 or SK3031	RT214 or RT215	ECG 116 or ECG 117
D45	B06BX4/2031-17	GE-504A	8D4 or 5A4D	PTC201 or PTC202	HEPR0053	SK3016 or SK3031	RT214 or RT215	ECG 116 or ECG 117
D46	B06BX4/2031-17	GE-504A	8D4 or 5A4D	PTC201 or PTC202	HEPR0053	SK3016 or SK3031	RT214 or RT215	ECG 116 or ECG 117
D47	B06BX4/2031-17	GE-504A	8D4 or 5A4D	PTC201 or PTC202	HEPR0053	SK3016 or SK3031	RT214 or RT215	ECG 116 or ECG 117
IC1	CA-3011/1002-25							ECG 726
IC2	1009-25							
IC3	1007-35							
Q1	2SC183/1210-17	GE-20	IRTR-70	PTC132	HEP56	SK3018	RT113	ECG 108
Q2	2SC184/1634-17	GE-20	TR-21	PTC115	HEP56	SK3018	RT107	ECG 108
Q3	2SC183/1210-17	GE-20	IRTR-70	PTC132	HEP56	SK3018	RT113	ECG 108
Q4	2SC183/1210-17	GE-20	IRTR-70	PTC132	HEP56	SK3018	RT113	ECG 108
Q5	2SC815/1879-17	GE-20	TR-24	PTC139	HEP724	SK3038	RT102	ECG 123A
Q6	2SC183/1210-17	GE-20	IRTR-70	PTC132	HEP56	SK3018	RT113	ECG 108
Q7	2SC183/1210-17	GE-20	IRTR-70	PTC132	HEP56	SK3018	RT113	ECG 108
Q8	2SC183/1210-17	GE-20	IRTR-70	PTC132	HEP56	SK3018	RT113	ECG 108
Q9	2SC458(LG,B)/ 1374-17	GE-20	TR-24	PTC136	HEP738	SK3124	RT102	ECG 123A
Q10	2SC815/1879 17	GE-20	TR-24	PTC139	HEP724	SK3038	RT102	ECG 123A
Q11	2SC815/1879-17	GE-20	TR-24	PTC139	HEP724	SK3038	RT102	ECG 123A
Q12	2SC777/2062-17		IRTR-64		HEP75	SK3047		ECG 224
Q13	2SCF8/1068-17		IRTR-65		HEPS3001	SK3048		ECG 224
Q14	2SC458/1374-17	GE-20	IRTR-51	PTC136	HEP738	SK3124	RT102	ECG 123A
Q15	2SC900/2132-17	GE-62	TR-21	PTC139	HEP725	SK3124	RT102	ECG 199
Q16	2SC900/2132-17	GE-62	TR-21	PTC139	HEP725	SK3124	RT102	ECG 199
Q17	2SB77/1060-17	GE-52	IRTR-85	PTC109	HEP633	SK3004	RT121	ECG 102A
Q18	2SC458	GE-20	IRTR-51	PTC136	HEP738	SK3124	RT102	ECG 123A
Q19	2SC458	GE-20	IRTR-51	PTC136	HEP738	SK3124	RT102	ECG 123A
Q20	2SC458	GE-20	IRTR-51	PTC136	HEP738	SK3124	RT102	ECG 123A
Q21	2SC945	GE-20	TR-21	PTC136	HEP728	SK3124	RT102	ECG 199
Q22	2SC945	GE-20	TR-21	PTC136	HEP728	SK3124	RT102	ECG 199
Q23	2SC945	GE-20	TR-21	PTC136	HEP728	SK3124	RT102	ECG 199
Q24	2SK19	GE-FET-2	FE-100	PTC152	HEPF0021	SK3116	RT175	ECG 132
Q25	2SC945	GE-20	TR-21	PTC136	HEP728	SK3124	RT102	ECG 123A
Q26	2SC945	GE-20	TR-21	PTC136	HEP728	SK3124	RT102	ECG 123A
Q27	2SC460G/1373-17	GE-20	IRTR-62	PTC101	HEP720	SK3039	RT107	ECG 108
Q28	2SC900/2132-17	GE-62	TR-21	PTC139	HEP725	SK3124	RT102	ECG 199
Q29	2SC184/1634-17	GE-20	TR-21	PTC115	HEP56	SK3018	RT107	ECG 108
Q30	2SC183	GE-20	IRTR-70	PTC132	HEP56	SK3018	RT113	ECG 108
Q31	2SC183	GE-20	IRTR-70	PTC132	HEP56	SK3018	RT113	ECG 108
Q34	2SC183	GE-20	IRTR-70	PTC132	HEP56	SK3018	RT113	ECG 108
Q35	2SB77	GE-52	IRTR-85	PTC109	HEP633	SK3004	RT121	ECG 102A
Q36	2SB337/1559-17	GE-16	TR-02	PTC105	HEP232	SK3009	RT127	ECG 121
Q37	2SB337/1559-17	GE-16	TR-02	PTC105	HEP232	SK3009	RT127	ECG 121
Q38	2SB77	GE-52	IRTR-85	PTC109	HEP633	SK3004	RT121	ECG 102A
Q39	2SB337	GE-16	TR-02	PTC105	HEP232	SK3009	RT127	ECG 121

(10) Zener
(12) D3, D4, D5, D6 -- matched set.

(CONTINUED ON PAGE 72)

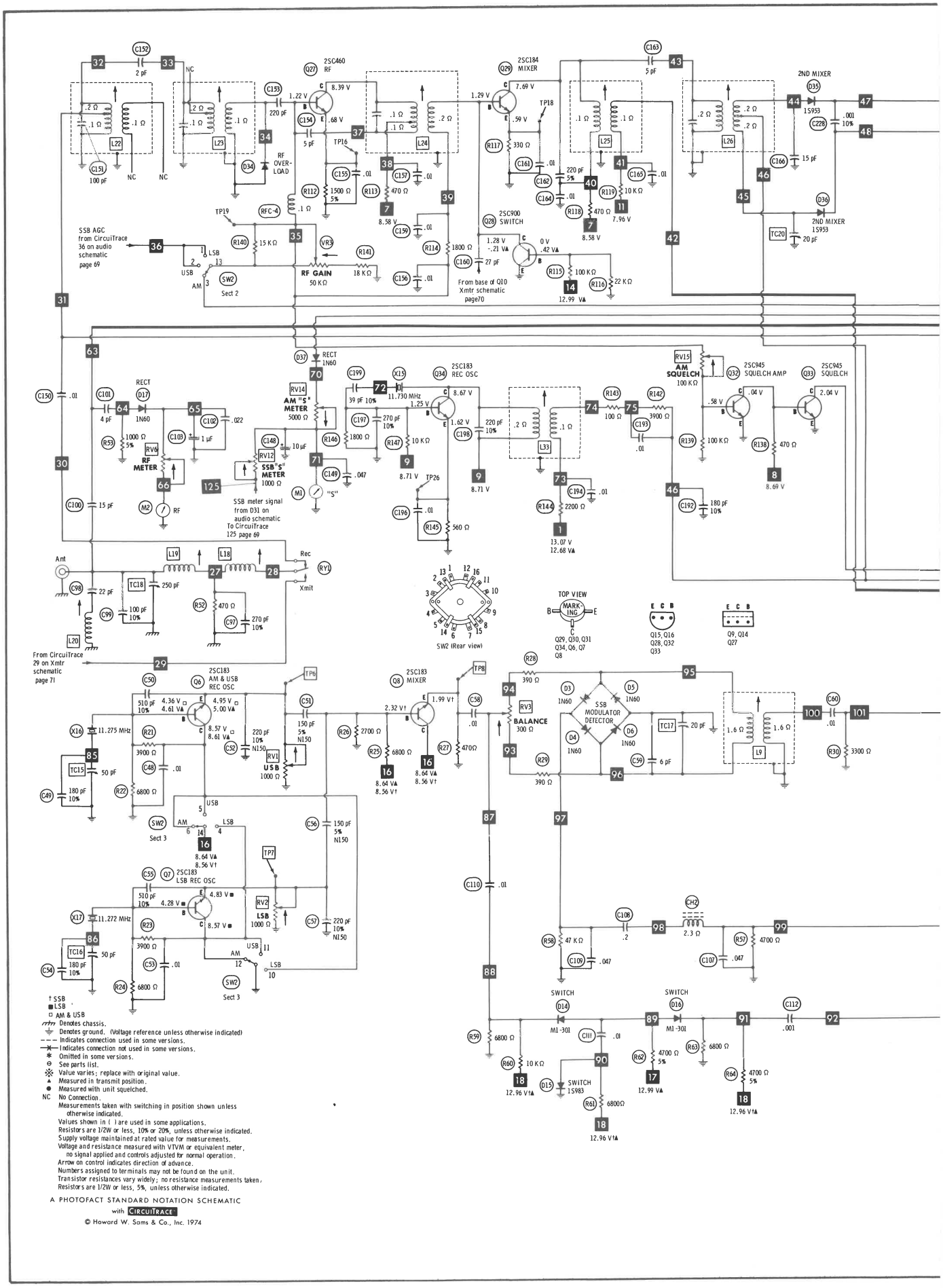

† SSB
■ LSB
□ AM & USB
Denotes chassis.
Denotes ground. (Voltage reference unless otherwise indicated)
Indicates connection used in some versions.
Indicates connection not used in some versions.
* Omitted in some versions.
⊖ See parts list.
※ Value varies; replace with original value.
▲ Measured in transmit position.
● Measured with unit squelched.
NC No Connection.
Measurements taken with switching in position shown unless otherwise indicated.
Values shown in ( ) are used in some applications.
Resistors are 1/2W or less, 10% or 20%, unless otherwise indicated.
Supply voltage maintained at rated value for measurements.
Voltage and resistance measured with VTVM or equivalent meter, no signal applied and controls adjusted for normal operation.
Arrow on control indicates direction of advance.
Numbers assigned to terminals may not be found on the unit.
Transistor resistances vary widely; no resistance measurements taken.
Resistors are 1/2W or less, 5%, unless otherwise indicated.

A PHOTOFACT STANDARD NOTATION SCHEMATIC
with CIRCUITRACE

© Howard W. Sams & Co., Inc. 1974

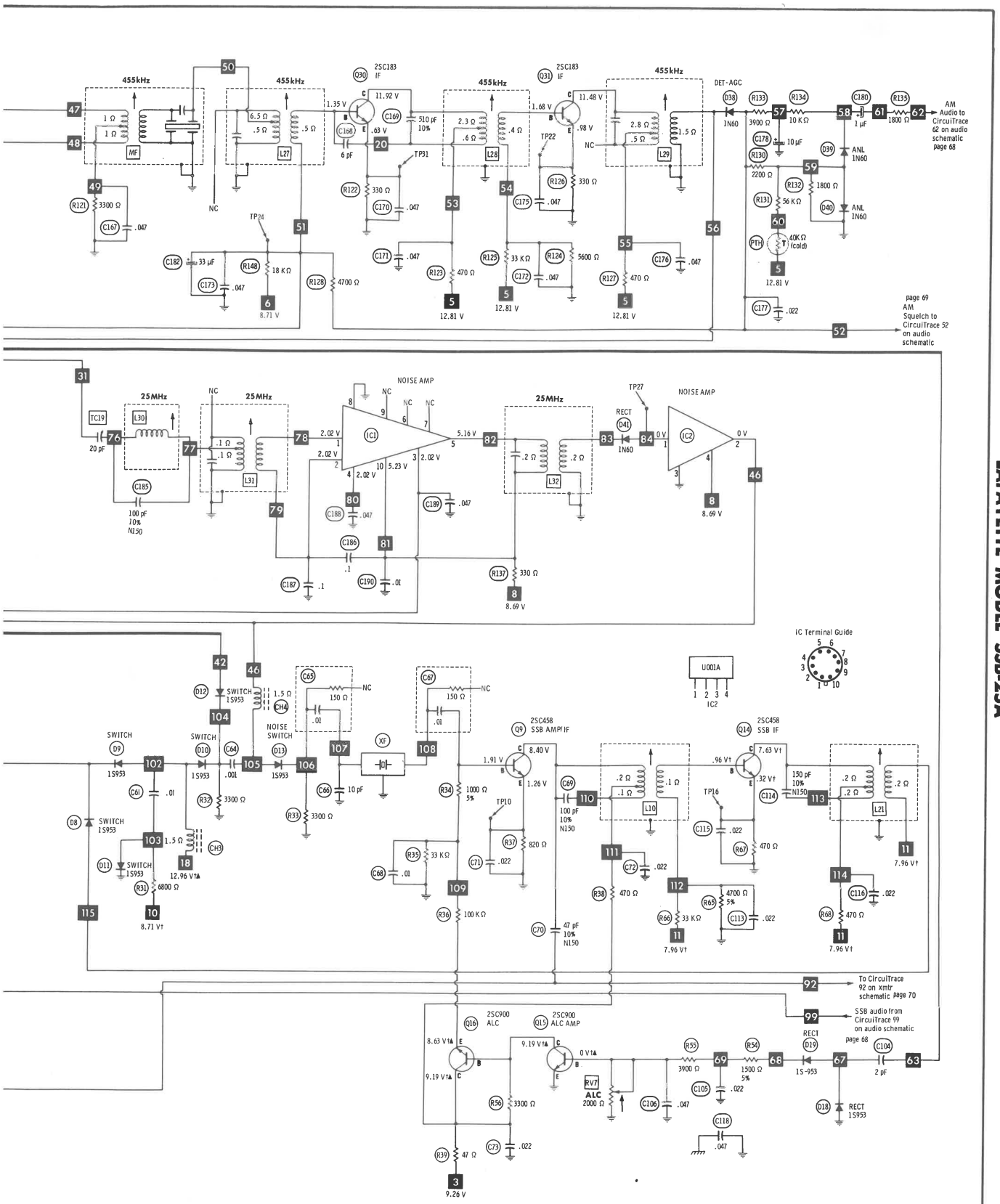
455kHz
455kHz
455kHz
455kHz
2SC183 IF
2SC183 IF
DET-AGC
AM Audio to CircuiTrace 62 on audio schematic page 68
page 69 AM Squelch to CircuiTrace 52 on audio schematic
25MHz
25MHz
25MHz
NOISE AMP
NOISE AMP
RECT
IC Terminal Guide
U001A
IC2
SWITCH
NOISE SWITCH
2SC458 SSB AMP/IF
2SC458 SSB IF
To CircuiTrace 92 on xmtr schematic page 70
SSB audio from CircuiTrace 99 on audio schematic page 68
2SC900 ALC
2SC900 ALC AMP
ALC
RECT
RECT 1S953

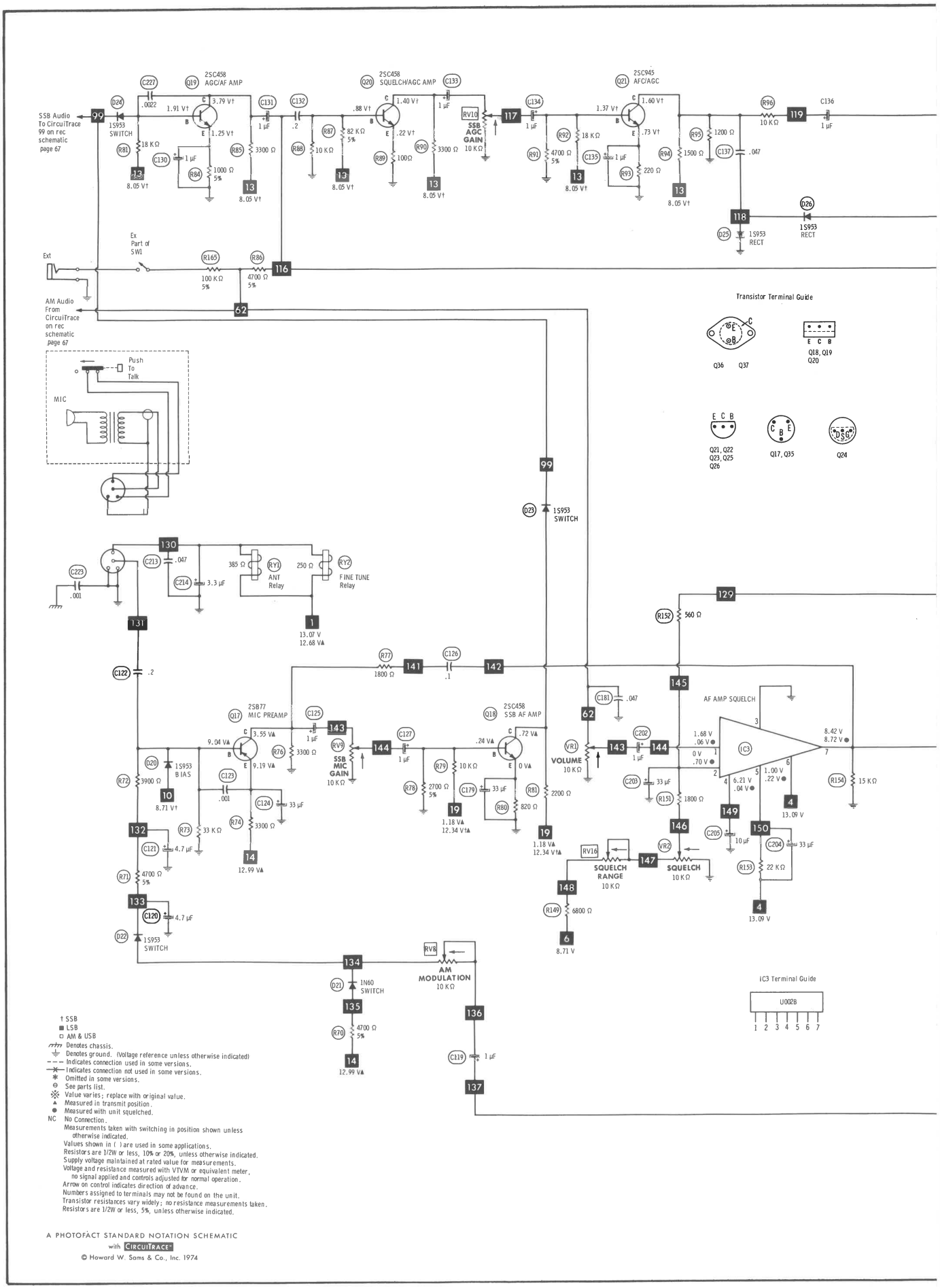

A PHOTOFACT STANDARD NOTATION SCHEMATIC with CIRCUITRACE™

© Howard W. Sams & Co., Inc. 1974

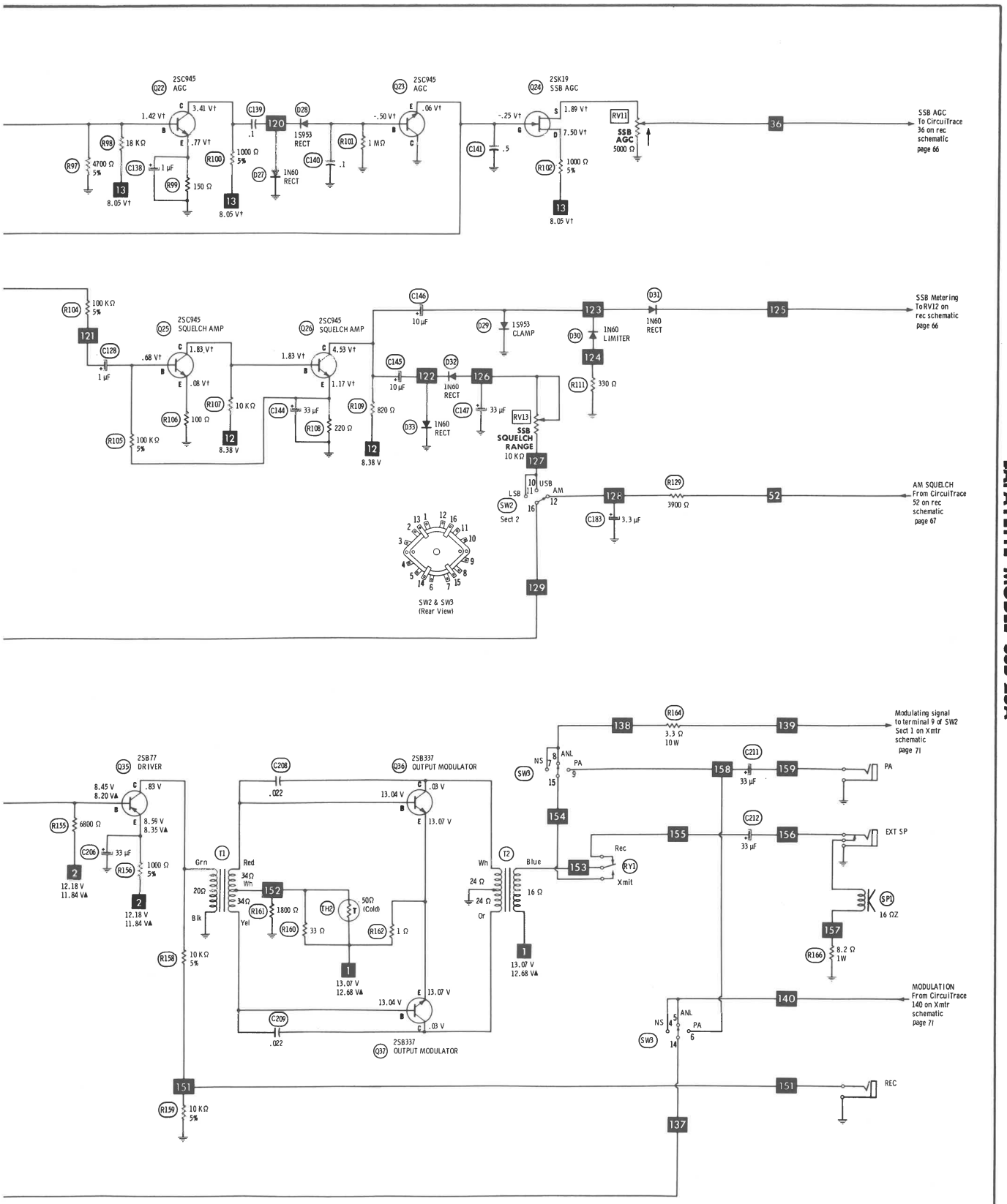
Q22 2SC945 AGC
Q23 2SC945 AGC
Q24 2SK19 SSB AGC
SSB AGC 5000 Ω
SSB AGC To CircuiTrace 36 on rec schematic page 66
Q25 2SC945 SQUELCH AMP
Q26 2SC945 SQUELCH AMP
1S953 CLAMP
1N60 LIMITER
1N60 RECT
SSB SQUELCH RANGE 10 KΩ
SSB Metering To RV12 on rec schematic page 66
AM SQUELCH From CircuiTrace 52 on rec schematic page 67
SW2 & SW3 (Rear View)
Q35 2SB77 DRIVER
Q36 2SB337 OUTPUT MODULATOR
Q37 2SB337 OUTPUT MODULATOR
Modulating signal to terminal 9 of SW2 Sect 1 on Xmtr schematic page 71
MODULATION From CircuiTrace 140 on Xmtr schematic page 71
PA
EXT SP
REC
Rec
Xmit

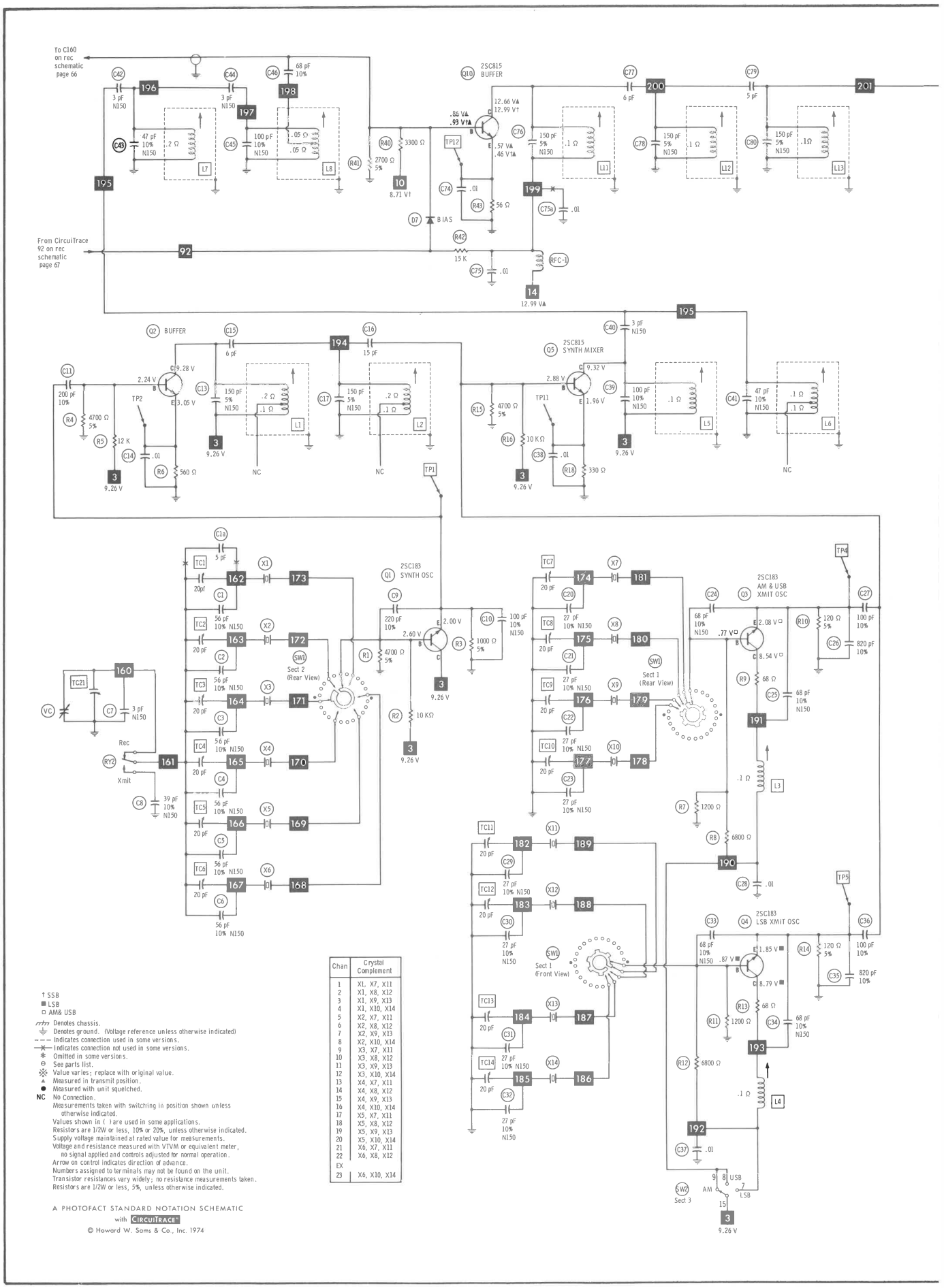

Chan	Crystal Complement
1	X1, X7, X11
2	X1, X8, X12
3	X1, X9, X13
4	X1, X10, X14
5	X2, X7, X11
6	X2, X8, X12
7	X2, X9, X13
8	X2, X10, X14
9	X3, X7, X11
10	X3, X8, X12
11	X3, X9, X13
12	X3, X10, X14
13	X4, X7, X11
14	X4, X8, X12
15	X4, X9, X13
16	X4, X10, X14
17	X5, X7, X11
18	X5, X8, X12
19	X5, X9, X13
20	X5, X10, X14
21	X6, X7, X11
22	X6, X8, X12
EX	
Z3	X6, X10, X14

† SSB
■ LSB
□ AM& USB
Denotes chassis.
Denotes ground. (Voltage reference unless otherwise indicated)
Indicates connection used in some versions.
Indicates connection not used in some versions.
* Omitted in some versions.
⊖ See parts list.
※ Value varies; replace with original value.
▲ Measured in transmit position.
● Measured with unit squelched.
NC No Connection.
Measurements taken with switching in position shown unless otherwise indicated.
Values shown in ( ) are used in some applications.
Resistors are 1/2W or less, 10% or 20%, unless otherwise indicated.
Supply voltage maintained at rated value for measurements.
Voltage and resistance measured with VTVM or equivalent meter, no signal applied and controls adjusted for normal operation.
Arrow on control indicates direction of advance.
Numbers assigned to terminals may not be found on the unit.
Transistor resistances vary widely; no resistance measurements taken.
Resistors are 1/2W or less, 5%, unless otherwise indicated.

A PHOTOFACT STANDARD NOTATION SCHEMATIC with CIRCUITRACE™

© Howard W. Sams & Co., Inc. 1974

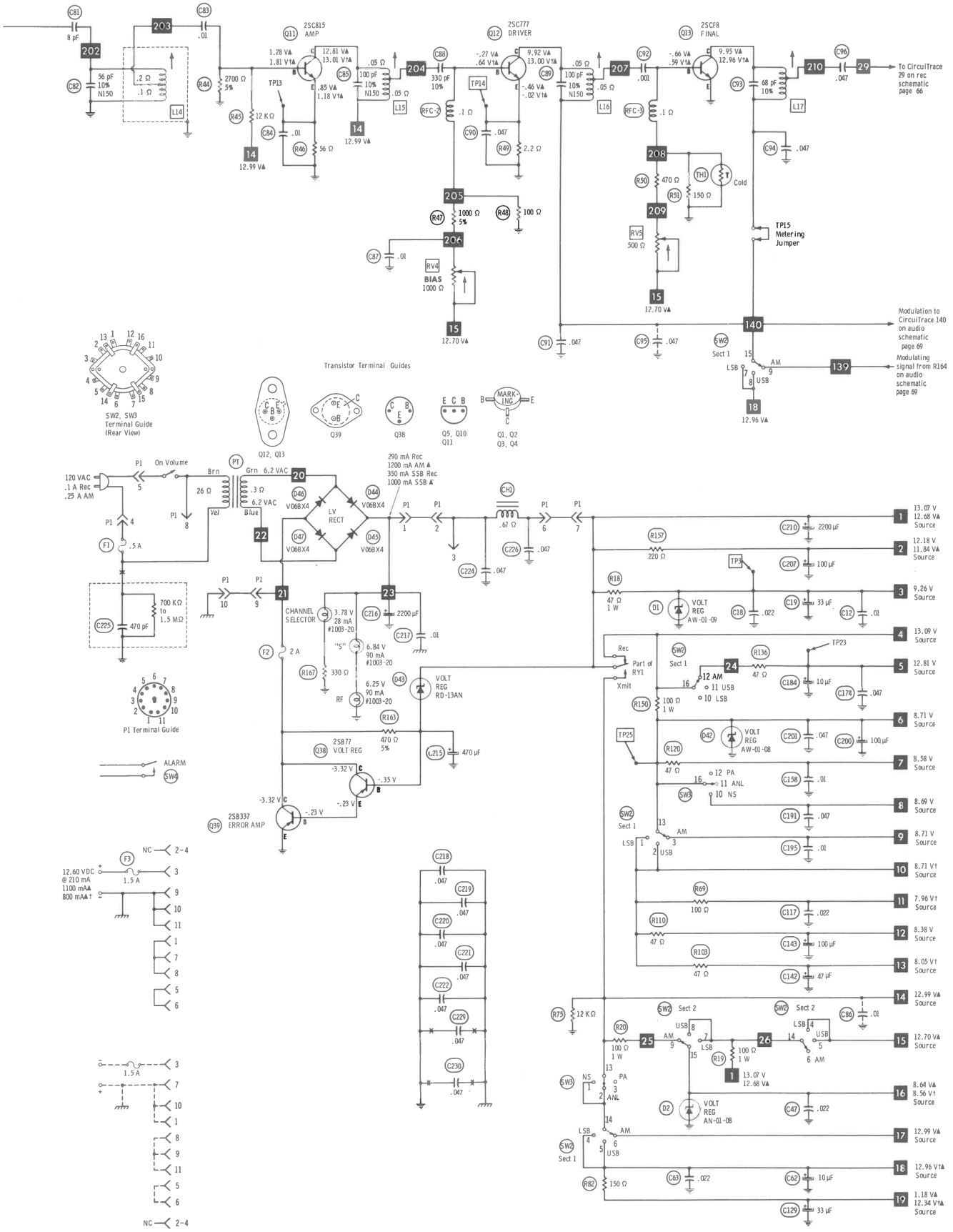

LAFAYETTE MODEL SSB-25A

PARTS LIST AND DESCRIPTION (CONTINUED)

(When ordering parts, state Model, Part Number, and Description.)

ELECTROLYTIC CAPACITORS

ITEM No.	RATING		REPLACEMENT DATA					
			MFGR. PART No.	ARCO PART No.	CENTRALAB PART No.	CORNELL-DUBILIER PART No.	MALLORY PART No.	SPRAGUE PART No.
C19	33	16 V	3104-12	ME-3-E-035	EP15-25	PC30-25	MTV30CB25	EV-1325
C62	10	16 V	2986-12	RME-B-E-010	EP15-10	PC10-25	VTT10A25	EV-1222
C103	1	50 V	2300-12	RME-A-J-001	EP50-2	PC1-50	MTV1CB50	EV-1615
C119	1	50 V	2300-12	RME-A-J-001	EP50-2	PC1-50	MTV1CB50	EV-1615
C120	4.7	25 V	3090-12	RME-A-G-005	EP30-5	PC5-50	VTT4R7A50	EV-1319
C121	4.7	25 V	3090-12	RME-A-G-005	EP30-5	PC5-50	VTT4R7A50	EV-1319
C124	33	16 V	3104-12	ME-3-E-035	EP15-25	PC30-25	MTV30CB25	EV-1325
C125	1	50 V	2300-12	RME-A-J-001	EP50-2	PC1-50	MTV1CB50	EV-1615
C127	1	50 V	2300-12	RME-A-J-001	EP50-2	PC1-50	MTV1CB50	EV-1615
C128	1	50 V	2300-12	RME-A-J-001	EP50-2	PC1-50	MTV1CB50	EV-1615
C129	33	10 V	3089-12	ME-3-D-035	EP15-25	PC30-25	VTT33A10	EV-1125
C130	1	50 V	2300-12	RME-A-J-001	EP50-2	PC1-50	MTV1CB50	EV-1615
C131	1	50 V	2300-12	RME-A-J-001	EP50-2	PC1-50	MTV1CB50	EV-1615
C133	1	50 V	2300-12	RME-A-J-001	EP50-2	PC1-50	MTV1CB50	EV-1615
C134	1	50 V	2300-12	RME-A-J-001	EP50-2	PC1-50	MTV1CB50	EV-1615
C135	1	50 V	2300-12	RME-A-J-001	EP50-2	PC1-50	MTV1CB50	EV-1615
C136	1	50 V	2300-12	RME-A-J-001	EP50-2	PC1-50	MTV1CB50	EV-1615
C138	1	50 V	2300-12	RME-A-J-001	EP50-2	PC1-50	MTV1CB50	EV-1615
C142	47	10 V	3235-12	RME-D-D-050	EP15-50	PC50-10	MTV50CB15	EV-1226
C143	100	16 V	3078-12	RME-E-E-100	EP15-100	PC100-16	MTV100CD15	EV-1230
C144	33	10 V	3089-12	ME-3-D-035	EP15-25	PC30-25	VTT33A10	EV-1125
C145	10	16 V	2986-12	RME-B-E-010	EP15-10	PC10-25	VTT10A25	EV-1222
C146	10	16 V	2986-12	RME-B-E-010	EP15-10	PC10-25	VTT10A25	EV-1222
C147	33	10 V	3089-12	ME-3-D-035	EP15-25	PC30-25	VTT33A10	EV-1125
C148	10	16 V	2986-12	RME-B-E-010	EP15-10	PC10-25	VTT10A25	EV-1222
C178	10	16 V	2986-12	RME-B-E-010	EP15-10	PC10-25	VTT10A25	EV-1222
C179	33	10 V	3089-12	ME-3-D-035	EP15-25	PC30-25	VTT33A10	EV-1125
C180	1	50 V	2300-12	RME-A-J-001	EP50-2	PC1-50	MTV1CB50	EV-1615
C182	33	10 V	3089-12	ME-3-D-035	EP15-25	PC30-25	VTT33A10	EV-1125
C183	3.3	25 V	1811-12				TDC335M035FL	SD35-3R39
C184	10	16 V	2986-12	RME-B-E-010	EP15-10	PC10-25	VTT10A25	EV-1222
C200	100	16 V	3078-12	RME-E-E-100	EP15-100	PC100-16	MTV100CD15	EV-1230
C202	1	50 V	2300-12	RME-A-J-001	EP50-2	PC1-50	MTV1CB50	EV-1615
C203	33	10V	3089-12	ME-3-D-035	EP15-25	PC30-25	VTT33A10	EV-1125
C204	33	16 V	3104-12	ME-3-E-035	EP15-25	PC30-25	MTV30CB25	EV-1325
C205	10	16 V	2986-12	RME-B-E-010	EP15-10	PC10-25	VTT10A25	EV-1222
C206	33	16 V	3104-12	ME-3-E-035	EP15-25	PC30-25	MTV30CB25	EV-1325
C207	100	16 V	3078-12	RME-E-E-100	EP15-100	PC100-16	MTV100CD15	EV-1230
C210	2200	16 V	3433-12	ME-G2000	EA15-2000	WBR2000-16	TC1520B	TVA-1175.3
C211	33	16 V	3104-12	ME-3-E-035	EP15-25	PC30-25	MTV30CB25	EV-1325
C212	33	16 V	3104-12	ME-3-E-035	EP15-25	PC30-25	MTV30CB25	EV-1325
C214	3.3	25 V	1811-12				TDC335M035FL	SD35-3R39
C215	470	6.3 V	3437-12	RME-K-D-500	EA15-500	PC500-16	MTV500DN15	EV-1550
C216	2200	16 V	3433-12	ME-G2000	EA15-2000	WBR2000-16	TC1520B	TVA-1175.3

CAPACITORS

ITEM No.	RATING			MFGR. PART No.	REPLACEMENT DATA				
					ARCO/ELMENCO PART No.	CENTRALAB PART No.	CORNELL-DUBILIER PART No.	MALLORY PART No.	SPRAGUE PART No.
C1	56	N150	10%	3313-12	*			*	10TCP-Q56
C1A	5						NP05		10TCC-V50
C2	56	N150	10%	3313-12	*			*	10TCP-Q56
C3	56	N150	10%	3313-12	*			*	10TCP-Q56
C4	56	N150	10%	3313-12	*			*	10TCP-Q56
C5	56	N150	10%	3313-12	*			*	10TCP-Q56
C6	56	N150	10%	3313-12	*			*	10TCP-Q56
C7	3	N150		3040-12	*			*	10TCP-V30
C8	39	N150	10%		*			*	10TCP-Q39
C9	220		10%		DM-19-221J	CPR-220J	CD15FD221J03	SX322	424ME2200J501
C10	100	N150	10%	3197-12	*			*	10TCP-T10
C11	220		10%	3021-12	DTZ-220				10TCC-T22
C12	.01				CCD-103	DD-103	GP10000	JF110	10TS-S10
C13	150	N150	5%	3071-12	*			*	10TCP-T15
C14	.01				CCD-103	DD-103	GP10000	JF110	10TS-S10
C15	6			2361-12			NP06		
C16	15				CCTO-150	DTZ-15	NP015	CN0415	10TCC-Q15
C17	150	N150	5%	3071-12	*			*	10TCP-T15
C18	.022				CCD-203	CK-203	MGP02	TA120	TG-S20
C20	27	N150	10%	3256-12	*			*	10TCP-Q27
C21	27	N150	10%	3256-12	*			*	10TCP-Q27
C22	27	N150	10%	3256-12	*			*	10TCP-Q27
C23	27	N150	10%	3256-12	*			*	10TCP-Q27
C24	68	N150	10%	2995-12	*			*	10TCP-Q68
C25	68	N150	10%	2995-12	*			*	10TCP-Q68
C26	820		10%		DM-20-821J	CPR-820J	CD19FD821J03	SX382	424ME8200J501
C27	100		10%		CCD-101	DD-101	GP100	GP310	10TS-T10
C28	.01				CCD-103	DD-103	GP10000	JF110	10TS-S10
C29	27	N150	10%	3256-12	*			*	10TCP-Q27
C30	27	N150	10%	3256-12	*			*	10TCP-Q27
C31	27	N150	10%	3256-12	*			*	10TCP-Q27
C32	27	N150	10%	3256-12	*			*	10TCP-Q27
C33	68	N150	10%	2995-12	*			*	10TCP-Q68
C34	68	N150	10%	2995-12	*			*	10TCP-Q68
C35	820		10%		DM-20-821J	CPR-820J	CD19FD821J03	SX382	424ME8200J501
C36	100		10%		CCD-101	DD-101	GP100	GP310	10TS-T10
C37	.01				CCD-103	DD-103	GP10000	JF110	10TS-S10
C38	.01				CCD-103	DD-103	GP10000	JF110	10TS-S10
C39	100	N150	10%	3197-12	*			*	10TCP-T10
C40	3	N150		3040-12	*			*	10TCP-V30
C41	47	N150	10%	3061-12	*			*	10TCP-Q47
C42	3	N150		3040-12	*			*	10TCP-V30
C43	47	N150	10%	3061-12	*			*	10TCP-Q47
C44	3	N150		3040-12	*			*	10TCP-V30
C45	100	N150	10%	3197-12	*			*	10TCP-T10
C46	68		10%			DTZ-68		CN0468	10TCC-Q68
C47	.022	25 V			CCD-203	CK-203	MGP02	TA120	TG-S20
C48	.01				CCD-103	DD-103	GP10000	JF110	10TS-S10
C49	180		10%		DM-19-181J	CPR-180J	CD15FD181J03	SX318	424MC1600J501
C50	510		10%		DM-19-511J	CPR-510J	CD15FD511J03	SX351	424ME5100J501
C51	150	N150	5%	3071-12	*			*	10TCP-T15
C52	220	N150	10%		*			*	10TCP-T22

PARTS LIST AND DESCRIPTION (CONTINUED)

(When ordering parts, state Model, Part Number, and Description.)

CAPACITORS (cont)

ITEM No.	RATING			MFGR. PART No.	REPLACEMENT DATA ARCO/ELMENCO PART No.	CENTRALAB PART No.	CORNELL-DUBILIER PART No.	MALLORY PART No.	SPRAGUE PART No.
C53	.01				CCD-103	DD-103	GP10000	JF110	10TS-S10
C54	180		10%		DM-19-181J	CPR-180J	CD15FD181J03	SX318	424MC1600J501
C55	510		10%		DM-19- 11J	CPR-510J	CD15FD511J03	SX351	424ME5100J501
C56	150	N150	5%	3071-12	*			*	10TCP-T15
C57	220	N150	10%		*			*	10TCP-T22
C58	.01				CCD-103	DD-103	GP10000	JF110	10TS-S10
C59	6			2361-12			NP06		
C60	.01				CCD-103	DD-103	GP10000	JF110	10TS-S10
C61	.01				CCD-103	DD-103	GP10000	JF110	10TS-S10
C63	.022	25 V			CCD-203	CK-203	MGP02	TA120	TG-S20
C64	.001				CCD-102	DD-102	GP1000	GP210	10TS-D10
C65	.01				CCD-103	DD-103	GP10000	JF110	10TS-S10
C66	10				CCT0-100	DTZ-10	NP010	CN0410	10TCC-Q10
C67	.01				CCD-103	DD-103	GP10000	JF110	10TS-S10
C68	.01				CCD-103	DD-103	GP10000	JF110	10TS-S10
C69	100	N150	10%	3197-12	*			*	10TCP-T10
C70	47	N150	10%	3061-12	*			*	10TCP-Q47
C71	.022	25 V			CCD-203	CK-203	MGP02	TA120	TG-S20
C72	.022	25 V			CCD-203	CK-203	MGP02	TA120	TG-S20
C73	.022	25 V			CCD-203	CK-203	MGP02	TA120	TG-S20
C74	.01				CCD-103	DD-103	GP10000	JF110	10TS-S10
C75	.01				CCD-103	DD-103	GP10000	JF110	10TS-S10
C75A	.01				CCD-103	DD-103	GP10000	JF110	10TS-S10
C76	150	N150	5%	3071-12	*			*	10TCP-T15
C77	6			2361-12			NP06		
C78	150	N150	5%	3071-12	*			*	10TCP-T15
C79	5						NP05		10TCC-V50
C80	150	N150	5%	3071-12	*			*	10TCP-T15
C81	8			3361-12			NP08		
C82	56	N150	10%	3313-12	*			*	10TCP-Q56
C83	.01				CCD-103	DD-103	GP10000	JF110	10TS-S10
C84	.01				CCD-103	DD-103	GP10000	JF110	10TS-S10
C85	100	N150	10%	3197-12	*			*	10TCP-T10
C87	.01				CCD-103	DD-103	GP10000	JF110	10TS-S10
C88	330		10%		CCD-331	DD-331	GP330	GP333	10TS-T33
C89	100	N150	10%	3197-12	*			*	10TCP-T10
C90	.047				CCD-503	CK-503	MGP05	TA150	TG-S50
C91	.047				CCD-503	CK-503	MGP05	TA150	TG-S50
C92	.001				CCD-102	DD-102	GP1000	GP210	10TS-D10
C93	68		10%			DTZ-68		CN0468	10TCC-Q68
C94	.047	25 V			CCD-503	CK-503	MGP05	TA150	TG-S50
C96	.047				CCD-503	CK-503	MGP05	TA150	TG-S50
C97	270		10%		CCD-270	DD-271	GP270	GP327	10TS-T27
C98	22				CCT0-220	DTZ-22	NP022	CN0422	10TCC-Q22
C99	100		10%		CCD-101	DD-101	GP100	GP310	10TS-T10
C100	15				CCT0-150	DTZ-15	NP015	CN0415	10TCC-Q15
C101	4						NP03P9		10TCC-V39
C102	.022				CCD-203	DD-203		GP120	10TS-S20
C104	2					DTZ-2R2	NP02P2	CN0522	10TCC-V22
C105	.022				CCD-203	DD-203		GP120	10TS-S20
C106	.047				CCD-503	CK-503	MGP05	TA150	TG-S50
C107	.047	25 V			CCD-503	CK-503	MGP05	TA150	TG-S50
C108	.2	12 V		3333-12					
C109	.047	25 V			CCD-503	CK-503	MGP05	TA150	TG-S50
C110	.01				CCD-103	DD-103	GP10000	JF110	10TS-S10
C111	.01				CCD-103	DD-103	GP10000	JF110	10TS-S10
C112	.001				CCD-102	DD-102	GP1000	GP210	10TS-D10
C113	.022	25 V			CCD-203	CK-203	MGP02	TA120	TG-S20
C114	150	N150	10%	3071-12	*			*	10TCP-T15
C115	.022	25 V			CCD-203	CK-203	MGP02	TA120	TG-S20
C116	.022	25 V			CCD-203	CK-203	MGP02	TA120	TG-S20
C117	.022	25 V			CCD-203	CK-203	MGP02	TA120	TG-S20
C118	.047				CCD-503	CK-503	MGP05	TA150	TG-S50
C122	.2	12 V		3333 12					
C123	.001				CCD-102	DD-102	GP1000	GP210	10TS-D10
C126	.1	50 V			1DP-2-104		DPMS2P1	EWF1A010	225P10491WD3
C132	.2	12 V		3333-12					
C137	.047	25 V			CCD-503	CK-503	MGP05	TA150	TG-S50
C139	.1	12 V				CK-104		TA010	TG-P10
C140	.1	50 V			1DP-2-104		DPMS2P1	EWF1A010	225P10491WD3
C141	.5	12 V		3438-12					
C149	.047	25 V			CCD-503	CK-503	MGP05	TA150	TG-S50
C150	.01				CCD-103	DD-103	GP10000	JF110	10TS-S10
C151	100				CCD-101	DD-101	GP100	GP310	10TS-T10
C152	2					DTZ-2R2	NP02P2	CN0522	10TCC-V22
C153	220				DM-19-221J	CPR-220J	CD15FD221J03	SX322	424ME2200J501
C154	5						NP05		10TCC-V50
C155	.01				CCD-103	DD-103	GP10000	JF110	10TS-S10
C156	.01				CCD-103	DD-103	GP10000	JF110	10TS-S10
C157	.01				CCD-103	DD-103	GP10000	JF110	10TS-S10
C158	.01				CCD-103	DD-103	GP10000	JF110	10TS-S10
C159	.01				CCD-103	DD-103	GP10000	JF110	10TS-S10
C160	27				CCT0-270		NP027	CN0427	10TCC-Q27
C161	.01				CCD-103	DD-103	GP10000	JF110	10TS-S10
C162	220		5%		DM-19-221J	CPR-220J	CD15FD221J03	SX322	424ME2200J501
C163	5						NP05		10TCC-V50
C164	.01				CCD-103	DD-103	GP10000	JF110	10TS-S10
C165	.01				CCD-103	DD-103	GP10000	JF110	10TS-S10
C166	15				CCT0-150	DTZ-15	NP015	CN0415	10TCC-Q15
C167	.047	25 V			CCD-503	CK-503	MGP05	TA150	TG-S50
C168	6			2361-12			NP06		
C169	510		10%	3195-12	DM-19-511J	CPR-510J	CD15FD511J03	SX351	424ME5100J501
C170	.047	25 V			CCD-503	CK-503	MGP05	TA150	TG-S50
C171	.047	25 V			CCD-503	CK-503	MGP05	TA150	TG-S50
C172	.047	25 V			CCD-503	CK-503	MGP05	TA150	TG-S50
C173	.047	25 V			CCD-503	CK-503	MGP05	TA150	TG-S50
C174	.047	25 V			CCD-503	CK-503	MGP05	TA150	TG-S50
C175	.047	25 V			CCD-503	CK-503	MGP05	TA150	TG-S50
C176	.047	25 V			CCD-503	CK-503	MGP05	TA150	TG-S50
C177	.022	25 V			CCD-203	CK-203	MGP02	TA120	TG-S20
C181	.047	25 V			CCD-503	CK-503	MGP05	TA150	TG-S50

PARTS LIST AND DESCRIPTION (CONTINUED)

(When ordering parts, state Model, Part Number, and Description.)

CAPACITORS (cont)

ITEM No.	RATING			MFGR. PART No.	REPLACEMENT DATA ARCO/ELMENCO PART No.	CENTRALAB PART No.	CORNELL-DUBILIER PART No.	MALLORY PART No.	SPRAGUE PART No.
C185	100	N150	10%	3197-12	*			*	10TCP-T10
C186	.1					CK-104		TA010	TG-P10
C187	.1	25 V				CK-104		TA010	TG-P10
C188	.047				CCD-503	CK-503	MGP05	TA150	TG-S50
C189	.047				CCD-503	CK-503	MGP05	TA150	TG-S50
C190	.01				CCD-103	DD-103	GP10000	JF110	10TS-S10
C191	.047	25 V			CCD-503	CK-503	MGP05	TA150	TG-S50
C192	180		10%		CCD-181	DD-181	GP180	GP318	10TS-T18
C193	.01				CCD-103	DD-103	GP10000	JF110	10TS-S10
C194	.01				CCD-103	DD-103	GP10000	JF110	10TS-S10
C195	.01				CCD-103	DD-103	GP10000	JF110	10TS-S10
C196	.01				CCD-103	DD-103	GP10000	JF110	10TS-S10
C197	270		10%		CCD-270	DD-271	GP270	GP327	10TS-T27
C198	220		10%		DM-19-221J	CPR-220J	CD15FD221J03	SX322	424ME2200J501
C199	39		10%					CN0439	10TCC-Q39
C201	.047	25 V			CCD-503	CK-503	MGP05	TA150	TG-S50
C208	.022	25 V			CCD-203	CK-203	MGP02	TA120	TG-S20
C209	.022	25 V			CCD-203	CK-203	MGP02	TA120	TG-S20
C213	.047				CCD-503	CK-503	MGP05	TA150	TG-S50
C217	.01				CCD-103	DD-103	GP10000	JF110	10TS-S10
C218	.047				CCD-503	CK-503	MGP05	TA150	TG-S50
C219	.047				CCD-503	CK-503	MGP05	TA150	TG-S50
C220	.047	25 V			CCD-503	CK-503	MGP05	TA150	TG-S50
C221	.047				CCD-503	CK-503	MGP05	TA150	TG-S50
C222	.047				CCD-503	CK-503	MGP05	TA150	TG-S50
C223	.001				CCD-102	DD-102	GP1000	GP210	10TS-D10
C224	.047				CCD-503	CK-503	MGP05	TA150	TG-S50
C225	470				CCD-471	DD-471	GP470	GP347	10TS-T47
C226	.047				CCD-503	CK-503	MGP05	TA150	TG-S50
C227	.0022				16DP-2-222	CPR-2200J	DPMS20D22	PVC16222	20PS-D22
C228	.001		10%		DM-19-102J	CPR-1000J	CD19F102J500	SX210	424ME1001J501
C229	.017				CCD-503	CK-503	MGP05	TA150	TG-S50
TC1	20			3189-12					
TC2	20			3189-12					
TC3	20			3189-12					
TC4	20			3189-12					
TC5	20			3189-12					
TC6	20			3189-12					
TC7	20			3189-12					
TC8	20			3189-12					
TC9	20			3189-12					
TC10	20			3189-12					
TC11	20			3189-12					
TC12	20			3189-12					
TC13	20			3189-12					
TC14	20			3189-12					
TC15	50			3190-12					
TC16	50			3190-12					
TC17	20			3189-12					
TC18	250			2930-12					
TC19	20			3189-12					
TC20	20			3189-12					
TC21									
VC				3432-12					

* Not normally in distributor's stock. Available thru distributor on order to manufacturer.

CONTROLS (All wattages 1/2 watt, or less, unless listed)

ITEM No.	FUNCTION	RESIST-ANCE	REPLACEMENT DATA MFGR. PART No.	CENTRALAB PART No.	CLAROSTAT PART No.	CTS—IRC PART No.	MALLORY PART No.
RV1	USB	1000	2564-13	TSV-1K (1) or T-1000 (1)	C-102 (1)	X201R102B (1)	MTC13L1 (1)
RV2	LSB	1000	2564-13	TSV-1K (1) or T-1000 (1)	C-102 (1)	X201R122B (1)	MTC13L1 (1)
RV3	Balance	300	2570-13	T-300 (2) or TSV-500 (2)	C-501 (2)	X201R351B (2)	MTC32L1 (2)
RV4	Bias	1000	2564-13	TSV-1K (1) or T-1000 (1)	C-102 (1)	X201R102B (1)	MTC13L1 (1)
RV5	Bias	500	2294-13	TSV-500 (1) or T-500 (1)	C-501 (1)	X201R501B (1)	MTC52L1 (1)
RV6	RF Meter	10 K		TSV-10K (1) or T-10K (1)	C-103 (1)	X201R103B (1)	MTC14L1 (1)
RV7	ALC	2000	2507-13	TSV-2.5K (1)or T-2500 (1)	C-252 (1)	X201R252B (1)	MTC23L1 (1)
RV8	Modulation	10 K		TSV-10K (1) or T-10K (1)	C-103 (1)	X201R103B (1)	MTC14L1
RV9	SSB Mic Gain	10 K	1187-11	TSV-10K or T-10K	C-103	X201R103B	MTC14L1
RV10	SSB AGC Gain	10 K		TSV-10K or T-10K	C-103	X201R103B	MTC14L1
RV11	SSB AGC	5 K	2339-13	TSV-5K or T-5000	C-520	X201R502B	MTC53L1
RV12	SSB Squelch Range	1000		TSV-1K (1) or T-1000 (1)	C-102 (1)	X201R102B (1)	MTC13L1 (1)
RV13	SSB Meter	10 K		TSV-10K (1) or T-10K (1)	C-103 (1)	X201R103B (1)	MTC14L1 (1)
RV14	"S" Meter	5 K	2492-13	TSV-5K (1) or T-5000 (1)	C-502 (1)	X201R502B (1)	MTC53L1 (1)
RV15	AM Squelch Adjust	100 K	2297-13	TSV-100K (1)or T-100 K (1)	C-104 (1)	X201R104B (1)	MTC15L1 (1)
RV16	Squelch Range	10 K	2474-13	TSV-10K (1) or T-10K (1)	C-103 (1)	X201R103 (1)	MTC14L1 (1)
VR1	Volume/Switch	10 K	1580-11				
VR2	Squelch	10 K	1648-11				
VR3	RF Gain	50 K	1581-11				

(1) Cut off one of the end terminals and bend to fit PC board.
(2) Modify terminals to fit PC board.

PARTS LIST AND DESCRIPTION (CONTINUED)

(When ordering parts, state Model, Part Number, and Description.)

RESISTORS (Power and Special)

ITEM No.	RATING	REPLACEMENT DATA	
		WORKMAN PART No.	MFGR. PART No.
PTH	140 K (Cold)		2305-13
R162	1 WW		2473-13
R164	3.3 10W		2571-13

ITEM No.	RATING	REPLACEMENT DATA	
		WORKMAN PART No.	MFGR. PART No.
R166	8.2 1W		2572-13
TH1	93 (Cold)		2038-17 (19D-27)
TH2	42 (Cold)		1638-17 (14D47)

COILS (RF-IF)

ITEM No.	USE	REPLACEMENT DATA			
		PART No.	MEISSNER PART No.	MILLER PART No.	REMARKS
CH3	Peaking (100 uH)	2490-23 (ELR-45)	19-2024	74F104AI	( ) Stamped on unit.
CH4	Peaking (100 uH)	2490-23 (ELR-45)	19-2024	74F104AI	(1) Includes 455 kHz Mechanical Filter (MF)
L1	Synth. Buffer (Pri.)	2491-23 (ETR-136)			
L2	Synth. Buffer (Sec.)	2491-23 (ETR-136)			
L3	AM/USB Oscillator	2219-23 (ETR-20)			
L4	LSB Oscillator	2219-23 (ETR-20)			
L5	Synth. Mixer	2220-23 (ETR-24)			
L6	Synth. Mixer	2221-23 (ETR-25)			
L7	Synth. Mixer	2221-23 (ETR-25)			
L8	Synth. Mixer	2222-23 (ETR-26)			
L9	Balanced Mixer	2492-23 (ETR-137)			
L10	SSB Amp/IF	2493-23 (ETI-65)			
L11	Synth. Buffer	2220-23 (ETR-24)			
L12	Synth. Buffer	2220-23 (ETR-24)			
L13	Synth. Buffer	2220-23 (ETR-24)			
L14	Synth. Buffer	2494-23 (ETR-101)			
L15	Xmtr. Amp	2028-24 (ETR-22)			
L16	Xmtr. Driver	2028-24 (ETR-22)			
L17	RF Filter	2029-24 (ETR-93)			
L18	RF Filter	2030-24 (ETR-94)			
L19	RF Filter	2489-23 (ETR-135)			
L20	TVI Trap	2216-23 (ETR-18)			
L21	SSB IF	2493-23 (ETI-65)			
L22	Ant Matching (Pri.)	2032-24 (ETR-12)			
L23	Ant Matching (Sec.)	2032-24 (ETR-12)			
L24	RF Amp	2033-24 (ETR-27)			
L25	1st Mixer (Pri.)	2085-24 (ETI-66)			
L26	1st Mixer (Sec.)	2017-24 (ETI-32)			
L27	Input IF	2035-24 (ETI-33)	2066	16-9026	
L28	Interstage IF	2008-24 (ETI-41)	2067	16-9027	
L29	Output IF	1949-24 (ETI-23)	2068	16-9028	
L30	Ant Matching	2039-24 (ETR-42)			
L31	Noise Amp Input	2040-24 (ETR-43)			
L32	Noise Amp	2042-24 (ETR-44)			
L33	Rec. Oscillator	2041-24 (ETR-28)			
MF	2nd Mixer (1)	2043-24 (EFC-3)			
RFC1	RF Choke (2 uH)	2240-23 (ELR-4)		74F226AP	
RFC2	RF Choke (2 uH)	2240-23 (ELR-4)		74F226AP	
RFC3	RF Choke (2 uH)	2240-23 (ELR-4)		74F226AP	
RFC4	RF Choke (2.2 uH)			74F226AP	

FILTER CHOKE

ITEM No.	RATINGS			REPLACEMENT DATA				NOTES
	CURRENT (Measured)	DC RES.	INDUCTANCE (0 CURRENT 1000~)	MFGR. PART No.	STANCOR PART No.	THORDARSON PART No.	TRIAD PART No.	
CH1	1.2 A	.67	3.5 mH	2488-23				

CHOKE (Audio Output)

ITEM No.	INDUCTANCE	REPLACEMENT DATA				NOTES
		MFGR. PART No.	STANCOR PART No.	THORDARSON PART No.	TRIAD PART No.	
CH2	15 mH	1637-15 (ELA-11)				( ) Stamped on unit.

TRANSFORMER (Power)

ITEM No.	RATING		REPLACEMENT DATA				NOTES
	PRI.	SEC. 1	MFGR. PART No.	STANCOR PART No.	THORDARSON PART No.	TRIAD PART No.	
PT	120 VAC @ .25A	12.4 VAC @ 1.2A	1705-15				

TRANSFORMER (Driver)

ITEM No.	TURNS RATIO			REPLACEMENT DATA				NOTES
	PRI.	SEC. 1	SEC. 2	MFGR. PART No.	STANCOR PART No.	THORDARSON PART No.	TRIAD Part No.	
T1	20	68 CT		1636-15 (ETA-16)				( ) Stamped on unit.

TRANSFORMER (Audio Output)

ITEM No.	IMPEDANCE		REPLACEMENT DATA				NOTES
	PRI.	SEC.	MFGR. PART No.	STANCOR PART No.	THORDARSON PART No.	TRIAD PART No.	
T2	48 CT	16	1706-15 (ETA-25)				( ) Stamped on unit.

PARTS LIST AND DESCRIPTION (CONTINUED)

(When ordering parts, state Model, Part Number, and Description.)

SPEAKER

ITEM No.	TYPE	REPLACEMENT DATA		NOTES
		MFGR. PART No.	QUAM PART No.	
SP1	3" PM 16 ohms	1203-36	30A05RZ16	

FUSE DEVICES

ITEM No.	DESCRIPTION	REPLACEMENT DATA						
		PART No.		BUSS PART No.		LITTELFUSE PART No.		WORKMAN PART No.
		DEVICE	HOLDER	DEVICE	HOLDER	DEVICE	HOLDER	DEVICE
F1	.5 A	3791-20	1417-19	AGC 1/2	HKP	312.500	342058A	FG1/2-2
F2	2 A	3755-20	1859-19	AGC 2		312002		FG2-2
F3	1.5 A			AGC 1 1/2	HDJ	31201.5	150145	FG1 1/2-2

MISCELLANEOUS

ITEM No.	PART NAME	PART No.	NOTES
C65	Component Combination	3435-12	
C67	Component Combination	3435-12	
C225	Component Combination	3188-12	
M1	Meter	1153-27	Signal
M2	Meter	1154-27	RF
MF	Mechanical Filter	2043-24	455 kHz
	Printed Circuit Board	1546-16	(EP0534) Main Board
	Printed Circuit Board	1547-16	(EP0538) Power Supply, Mic Preamp and SSB AF Amp Board.
	Printed Circuit Board	1548-16	(EP0539) AGC, Squelch Board
	Printed Circuit Board	1549-16	(EP0540) ALC
RY1	Relay	1052-37	Antenna
RY2	Relay	1064-37	Fine Tune
SW1	Switch	1730-14	Channel Selector
SW2	Switch	1731-14	AM-USB-LSB
SW3	Switch	1732-14	NS-ANL-PA
SW4	Switch	1733-14	Alarm
X1	Crystal	1264-35	7.7766 MHz
X2	Crystal	1265-35	7.7933 MHz
X3	Crystal	1266-35	7.8100 MHz
X4	Crystal	1267-35	7.8266 MHz
X5	Crystal	1268-35	7.8433 MHz
X6	Crystal	1269-35	7.8600 MHz
X7	Crystal	1270-35	14.907 MHz
X8	Crystal	1271-35	14.917 MHz
X9	Crystal	1272-35	14.927 MHz
X10	Crystal	1273-35	14.947 MHz
X11	Crystal	1274-35	14.904 MHz
X12	Crystal	1275-35	14.914 MHz
X13	Crystal	1276-35	14.924 MHz
X14	Crystal	1277-35	14.944 MHz
X15	Crystal	1096-35	11.275 MHz
X16	Crystal	1278-35	11.272 MHz
X17	Crystal	1097-35	11.730 MHz
XF	Crystal Filter	1263-35	7.80 MHz

CABINETS & CABINET PARTS (When ordering specify model, chassis & color)

ITEM	PART No.
Bracket, Mounting	6620-10
Cabinet, Top	7513-10
Cabinet, Bottom	7514-10
Chassis, Front	7496-10
Chassis, Rear	7497-10
Chassis, Right	7498-10
Chassis, Left	7499-10

ITEM	PART No.
Escutcheon, Front Trim	7512-10
Front Cover Glass	4321-20
Knob, Selector	1735-18
Knob, Fine Tune	1736-18
Knob, Control	1737-18
Panel, Plastic	4315-20
Indicator, Channel	6624-10

ACCESSORIES

ITEM	MFGR. PART No.	REMARKS
Microphone	1010-34	
Mic Clip	2260-10	
Mic Guide	4221-10	
AC Cord	1221-38	
DC Cord	1222-38	

WIRING DATA

General-use Hook-up Wire ..... Use BELDEN No. 8530 (Solid) Available in 12 Colors
8524 (Stranded) Available in 12 Colors
Shielded Antenna Lead ..... Use BELDEN No. 8214 Lowest-loss (RG-8/U Type)
8237 Low-loss (RG-8/U)
8240 (Solid) Miniature (RG-58/U)
8259 (Stranded) Miniature (RG-58A/U)
Coiled Microphone Cable ..... Use BELDEN No. 8497 3-Conductor,1 Shielded,for Press-to-Talk (Neoprene)
8496 3-Conductor,1 Shielded,for Press-to-Talk (Vinyl)
Ignition Noise Suppression ..... Use BELDEN No. 7300-Series Spark-Plug Sets
Bonding Strap ..... Use BELDEN No. 8661 (3/8 In.)