SAMS

PHOTOFACT®

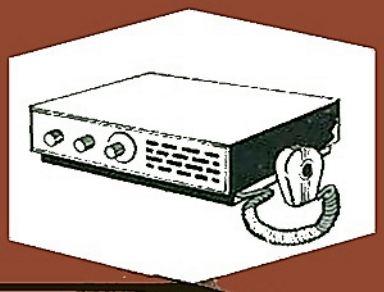

CB RADIO SERIES

CB-49

49

OCTOBER 1973

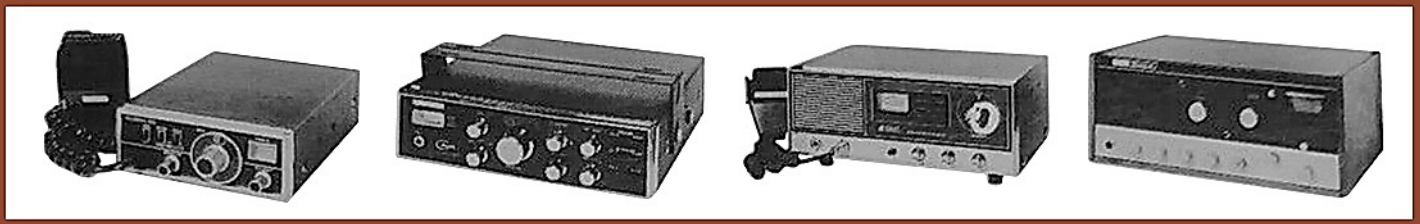

CONTENTS

HOWARD W. SAMS & CO., INC. Indianapolis, Indiana

For Supplier Address See PHOTOFACT Index

NOTE

ONLY THOSE PERSONS PROPERLY LICENSED ARE PERMITTED TO MAKE REPAIRS OR ADJUSTMENTS WHICH MAY RESULT IN ILLEGAL OPERATION. (REFER TO FCC RULES AND REGULATIONS PART 95, SUBPARTS C & D.)

The frequency of the transmitter should be checked periodically with a secondary frequency standard to insure proper and legal operation.

Best results will be obtained when adjusting the final RF output circuit if the antenna normally used is connected and the chassis is as nearly in the cabinet as possible.

Connect either 50-ohm dummy load or the normally used antenna system.

MODEL TITAN IV

ALIGNMENT INSTRUCTIONS

Suggested Alignment Tools:
L103, L602, L700, L701, T100, T600, T702.... GC ELECTRONICS #9302, 8606, 9295, 9440
L200, T101, T200, T201, T700, T701..... GC ELECTRONICS #9302, 9300
L300 ..... GC ELECTRONICS #9440

RECEIVER IF ALIGNMENT

Connect an AC VTVM across speaker voice coil. Set SQUELCH control fully counterclockwise, RF Gain control fully clockwise, LIMITER to Off, FINE TUNE control to center position, MODE Switch to AM. Adjust AUDIO Control for suitable reading.

SIGNAL GENERATOR	CHANNEL	ADJUST	REMARKS
Connect high side thru .01mfd to the gate of Q103 (2nd Mixer), low side to chassis. Set to 455kHz. (Mod.)	Any	L200, T200	Adjust for maximum.

BFO ADJUSTMENT

SIGNAL GENERATOR	CHANNEL	ADJUST	REMARKS
Same as above except (Unmod). Measure AGC voltage (Point A to chassis) with a DC VTVM. Adjust Signal generator output level for -.3V on AGC line. Then, increase output level by 16db and increase generator frequency until AGC voltage is again -.3V.	Any	L300	Set Mode switch to LSB. Difference between signal generator frequency and BFO oscillator frequency will be audio tone from speaker. Adjust L300 for zero beat.
As above, except decrease frequency below 455kHz until AGC voltage is -.3V.	Any	C300	Set Mode switch to USB. Adjust C300 for zero beat.

HOWARD W. SAMS & CO., INC. Indianapolis, Indiana 46206

RECEIVER ALIGNMENT (Continued)

DIAL CALIBRATION

SIGNAL GENERATOR	CHANNEL	ADJUST	REMARKS
Connect high side thru .01mfd to antenna connector, low side to chassis. Set to 26.975MHz (Channel 2) (Mod.).	2	C127	Set Mode switch to AM. Adjust C127 for maximum.

RF ALIGNMENT

SIGNAL GENERATOR	CHANNEL	ADJUST	REMARKS
Connect high side thru .01mfd to antenna connector, low side to chassis. Set to 27.085MHz. (Channel 11) (Mod).	11	T101, T100	Set RF Gain fully clockwise (Maximum). Detune top slug of T101 counterclockwise several turns. Adjust T101 (Bottom slug only) and T100 for maximum.
As above, except set to 27.225MHz. (Channel 22).	22	L103	Adjust for maximum.
As above, except set to 26.975MHz (Channel 2).	2	T101(Top) C117	Adjust T101 (top slug) and C117 for maximum.

S-METER CALIBRATION

SIGNAL GENERATOR	CHANNEL	ADJUST	REMARKS
		R207	Adjust for 0 reading on meter with no signal.
Connect high side thru .01mfd to antenna connector, low side to chassis. Set to 27.085MHz (Channel 11) (Unmod). Set output to 50uv.	11	T201, R209	Adjust top and bottom slugs of T201 for maximum S-Meter reading; adjust R209 for reading of 9.

TRANSMITTER ALIGNMENT

AM

INDICATOR	ADJUST	REMARKS
Measure voltage at emitter of Q603 to ground with a DC VTVM.	T600	Set channel selector to blank channel (between 1 and 23); Key transmitter and adjust T600 for maximum voltage.
Measure voltage at junction of R801 and C802 (Point B) to ground with a DC VTVM.	R711	Set mode switch to AM; Key transmitter and adjust for -12 volts.
	R712	Set Mode switch to USB or LSB; Key transmitter and adjust for -20 volts.
Connect an RF wattmeter between antenna connector and dummy load.	C718, C719	Set mode switch to AM; set channel selector to Channel 11. Key transmitter and tune for maximum output.
Measure voltage at junction of R801 and C802 (Point B) to ground with a DC VTVM.	T701, L700, T702, L701	Key transmitter and adjust top and bottom slugs for maximum negative voltage (at least -25V).

MODULATION ADJUSTMENT

INDICATOR	ADJUST	REMARKS
Connect an audio oscillator high side to pin 1 of microphone connector, low side to chassis. Set at 1kHz, 10mv. Connect a modulation monitor between antenna connector and dummy load.	R520	Set microphone gain control at maximum (fully clockwise); set mode switch to AM. Key transmitter and adjust R520 for 100% modulation.

TRANSMITTER ALIGNMENT (Continued)

SSB BALANCED MODULATOR ADJ.

INDICATOR	ADJUST	REMARKS
Connect an RF wattmeter between antenna connector and dummy load.	R605, C618.	Set mode switch to USB or LSB. Remove microphone element from stand to prevent modulation. Key transmitter and adjust for MINIMUM RF output.

SSB CARRIER OSCILLATOR ADJ.

INDICATOR	ADJUST	REMARKS
Connect an RF voltmeter across dummy load. Connect variable audio signal generator to pin 2 of microphone connector.	C609	Set mode switch to USB. Disable ALC by shorting point C to ground. Key transmitter. Adjust audio frequency for maximum RF voltage. Adjust audio generator output voltage for 10 volts RF. Change audio frequency to 2.65kHz (keeping audio voltage constant). Adjust C609 for 3.3 volts RF.
	C610	Same as abouve except set mode switch to LSB; adjust C610.
Connect an RF wattmeter between antenna connector and dummy load.		Remove short from C. Check balanced modulator adjustment as above in USB and LSB.

ALC ADJUSTMENT

INDICATOR	ADJUST	REMARKS
Connect an RF wattmeter between antenna connector and dummy load. Connect a two-tone audio generator or two audio generators with outputs of 900 and 1900Hz and equal voltage, high side to pin 2 of microphone connector, low side to chassis; set output level to 10mv.	R519	Set mode switch to USB or LSB. Key transmitter; adjust R519 for 4.5 watts RF output.

FREQUENCY ADJUSTMENT

INDICATOR	ADJUST	REMARKS
Couple a frequency meter or counter to RF output.	C604	Short point D to ground to unbalance balanced modulator. Set mode switch to USB. Key transmitter and check several channel frequencies; if consistently high or low, adjust C604 for best compromise.
	C601	Set mode switch to LSB. Check frequencies as above; adjust C601 for best compromise.
	C602	Set mode switch to AM. Check frequencies as above; adjust C602 for best compromise. Remove short.

POWER METER ADJUSTMENT

INDICATOR	ADJUST	REMARKS
Connect an RF wattmeter between antenna connector and dummy load.	R718	Set mode switch to AM. Set meter function switch to PWR. Key transmitter. Adjust R718 for meter reading of RF power output.

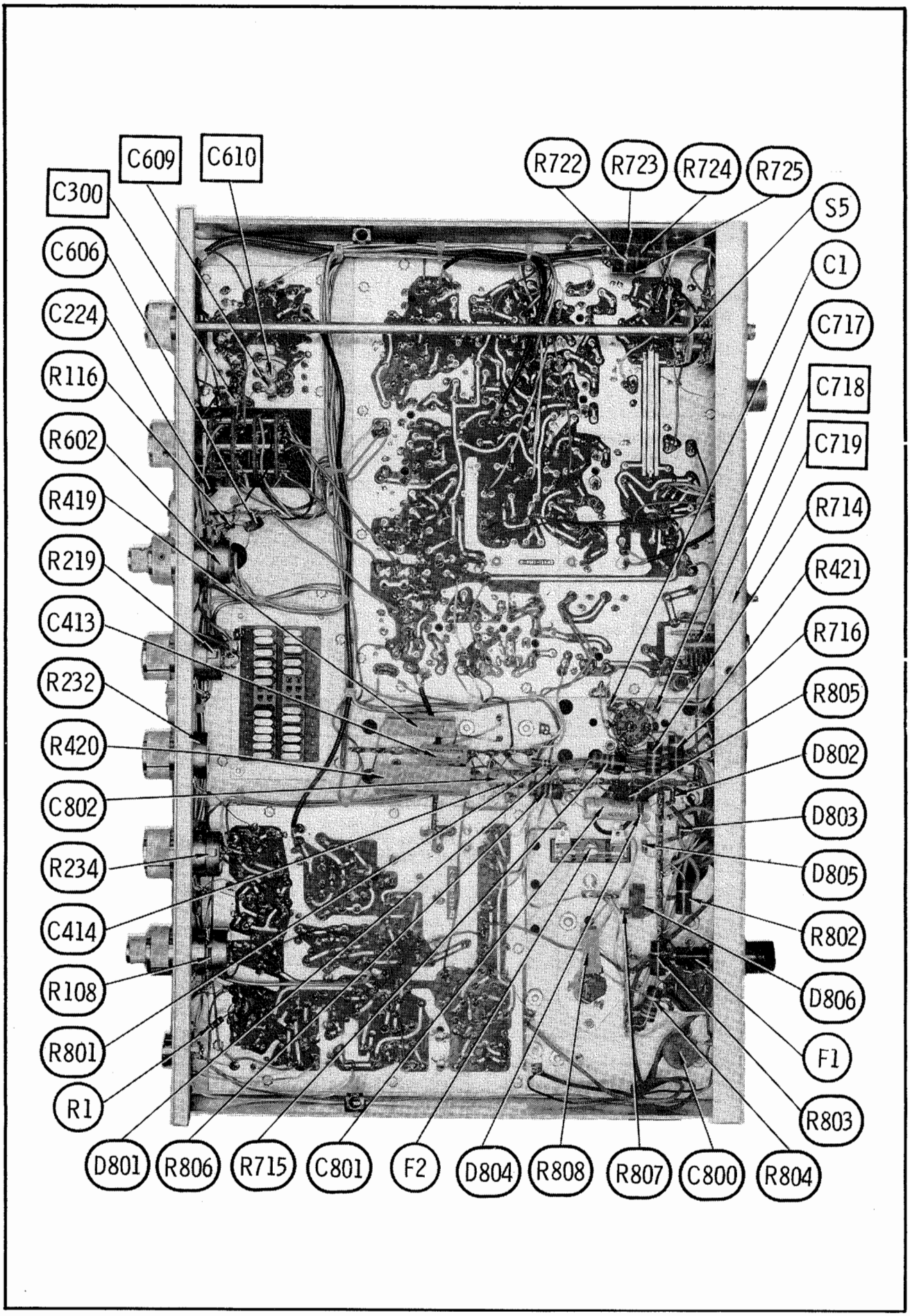
C609
C610
C300
C606
C224
R116
R602
R419
R219
C413
R232
R420
C802
R234
C414
R108
R801
R1
D801
R806
R715
C801
F2
D804
R808
R807
C800
R804
R722
R723
R724
R725
S5
C1
C717
C718
C719
R714
R421
R716
R805
D802
D803
D805
R802
D806
F1
R803

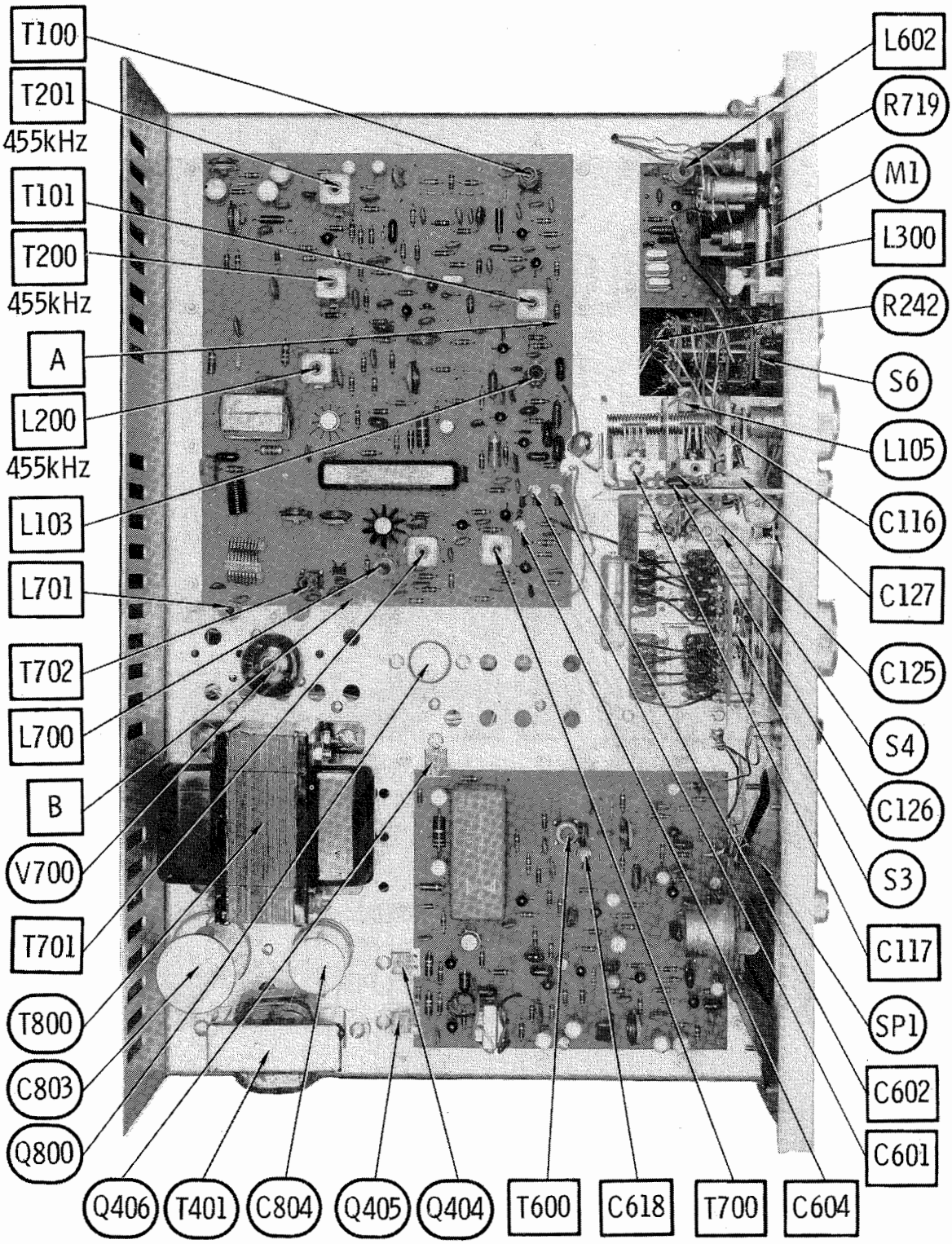
T100
T201
455kHz
T101
T200
455kHz
A
L200
455kHz
L103
L701
T702
L700
B
V700
T701
T800
C803
Q800
Q406
T401
C804
Q405
Q404
T600
C618
T700
C604
L602
R719
M1
L300
R242
S6
L105
C116
C127
C125
S4
C126
S3
C117
SP1
C602
C601

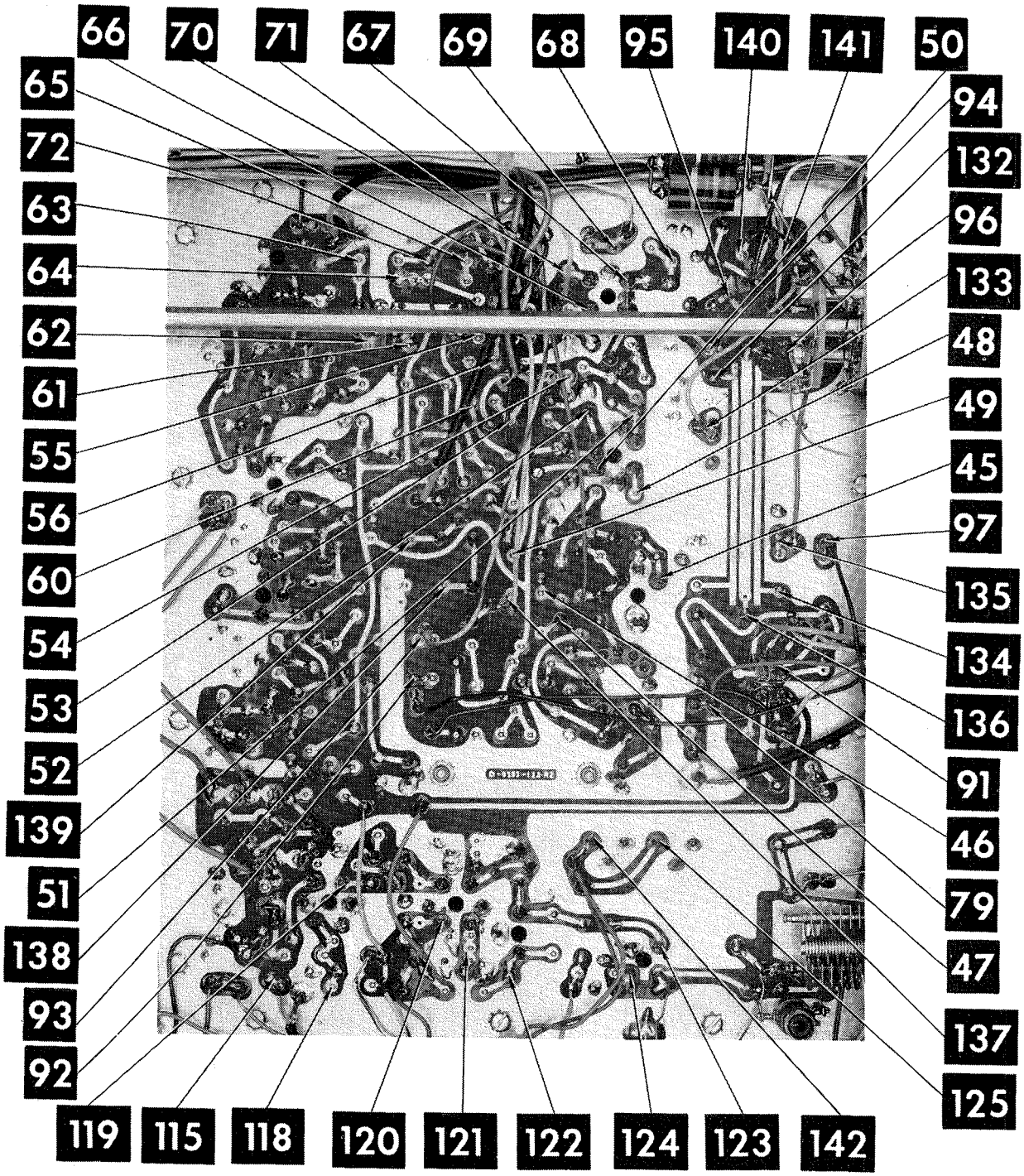

A Howard W. Sams CIRCUITRACE® Photo

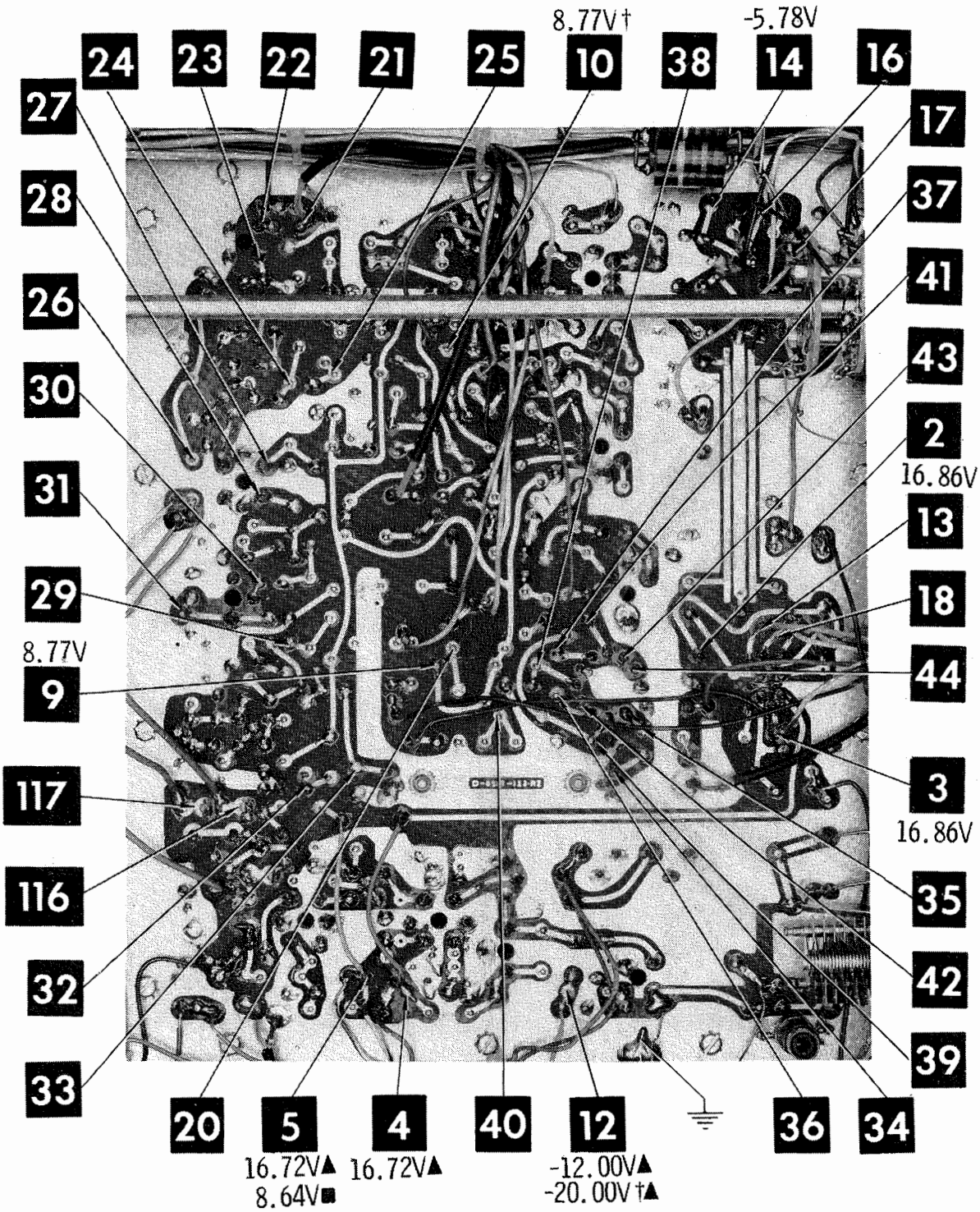

A Howard W. Sams CIRCUITRACE® Photo

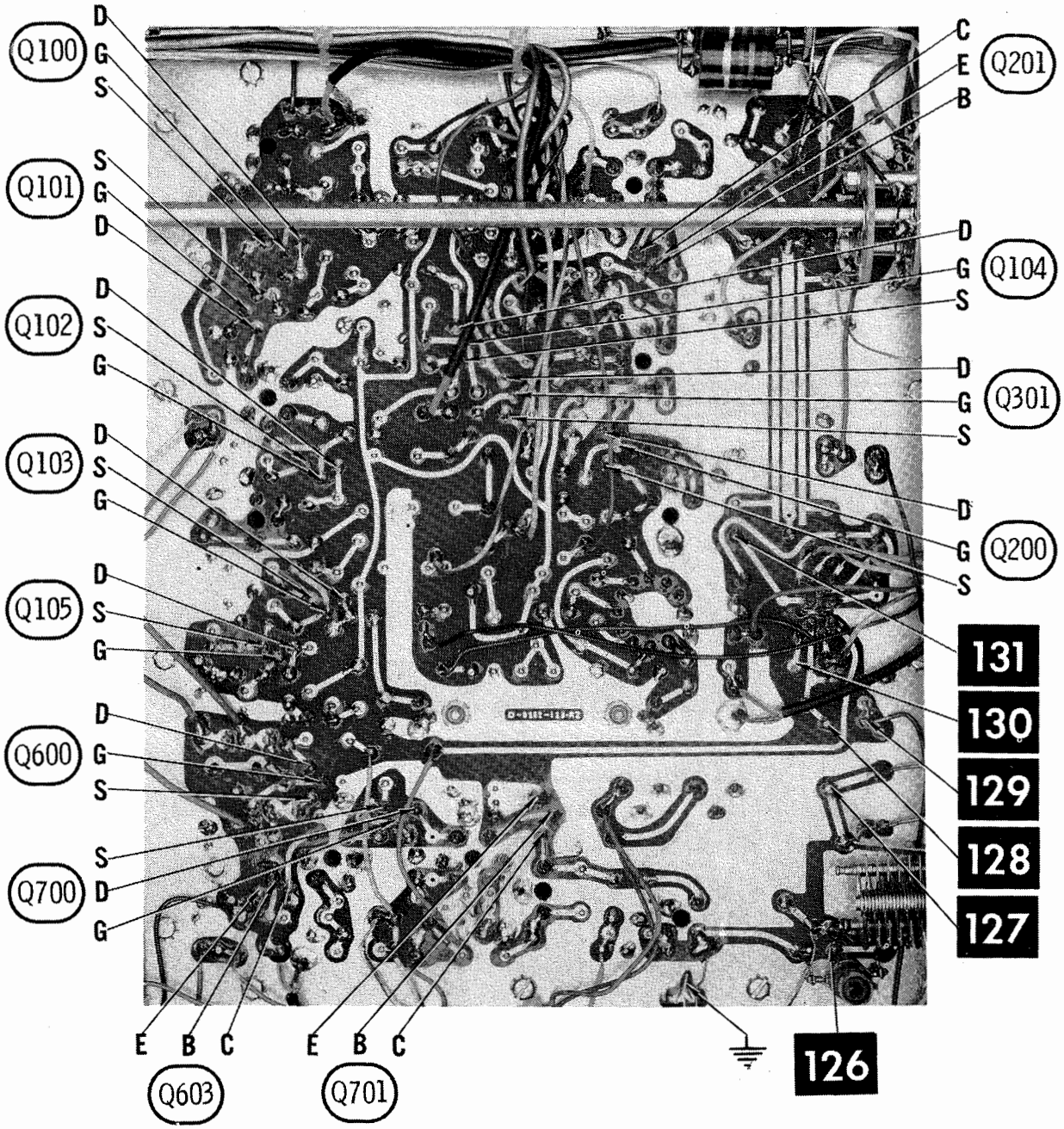

A Howard W. Sams CIRCUITRACE® Photo

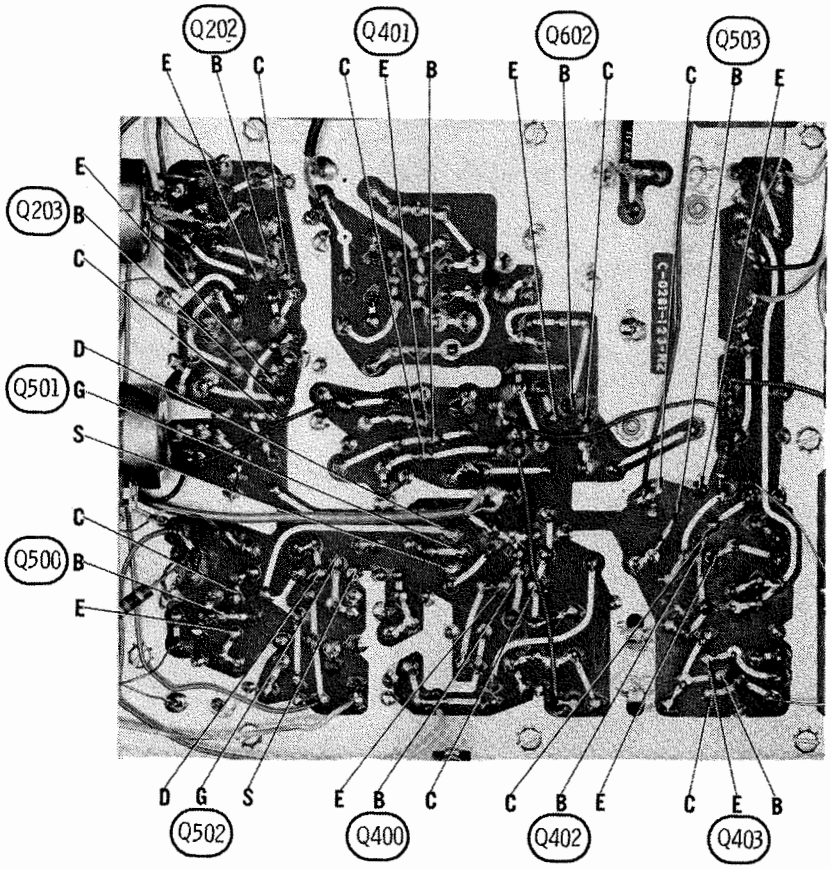

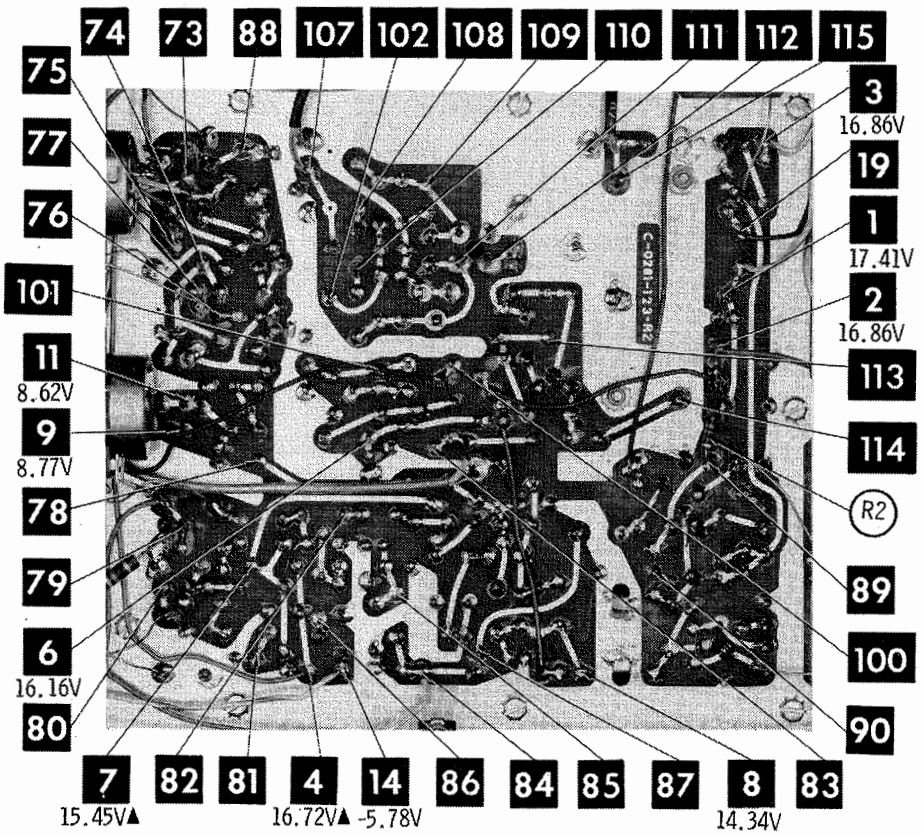

A Howard W. Sams CIRCUITRACE® Photo

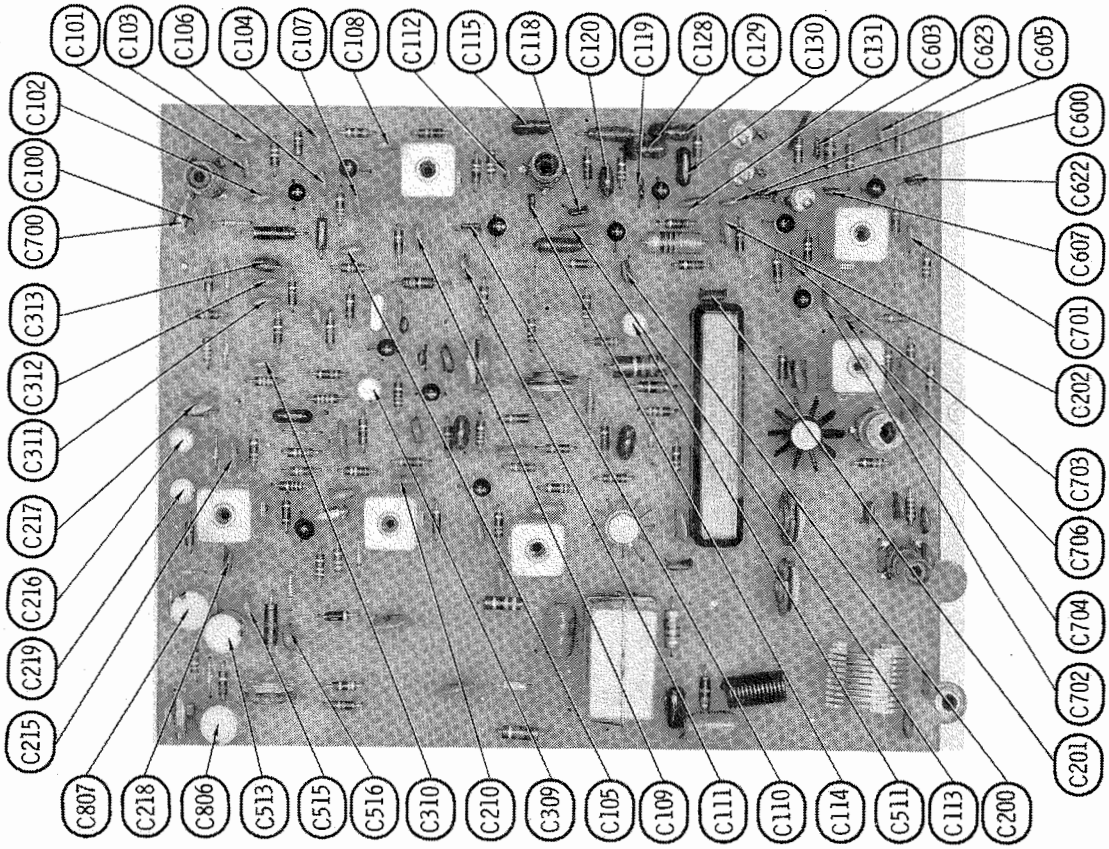
C101
C103
C106
C104
C107
C108
C112
C115
C118
C120
C119
C128
C129
C130
C131
C603
C623
C605
C102
C100
C700
C313
C312
C311
C217
C216
C219
C215
C600
C622
C607
C701
C202
C703
C706
C704
C702
C201
C807
C218
C806
C513
C515
C516
C310
C210
C309
C105
C109
C111
C110
C114
C511
C113
C200

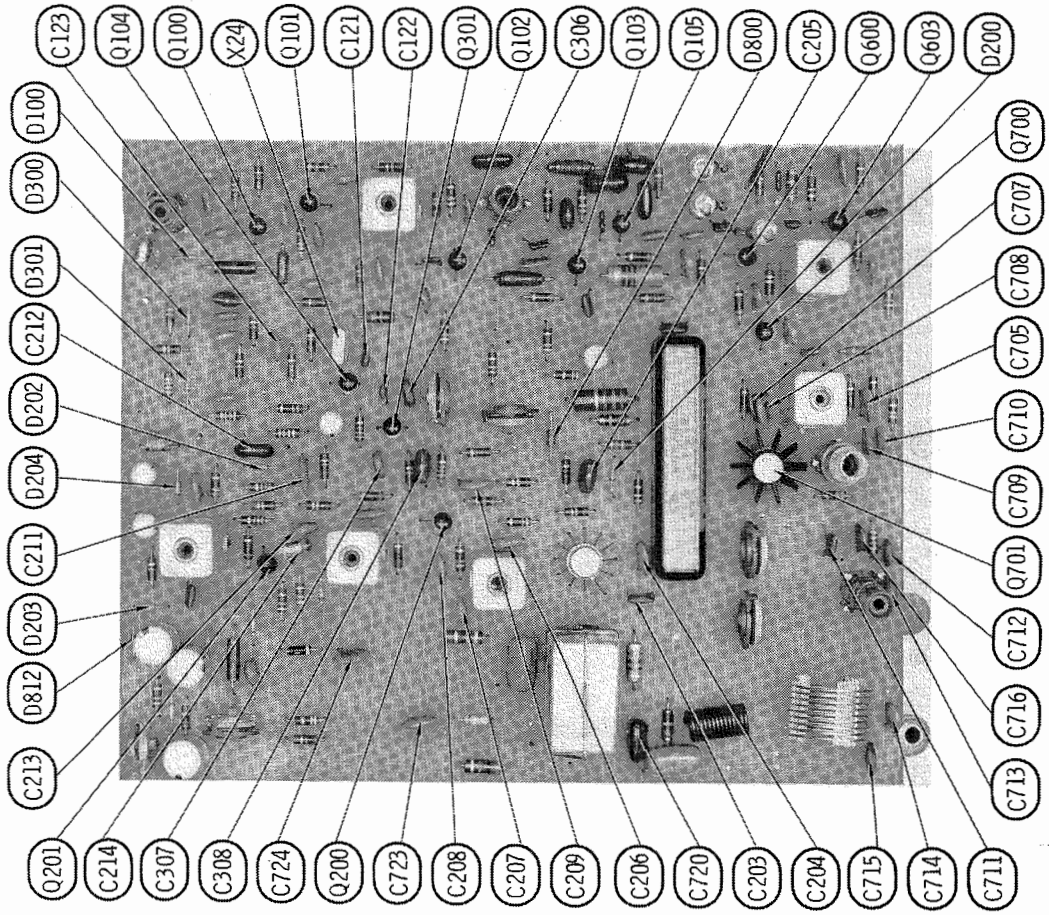
C123
Q104
Q100
X24
Q101
C121
C122
Q301
Q102
C306
Q103
Q105
D800
C205
Q600
Q603
D200
D100
D300
D301
C212
D202
D204
C211
D203
D812
C213
Q700
C707
C708
C705
C710
C709
Q701
C712
C716
C713
Q201
C214
C307
C308
C724
Q200
C723
C208
C207
C209
C206
C720
C203
C204
C715
C714
C711

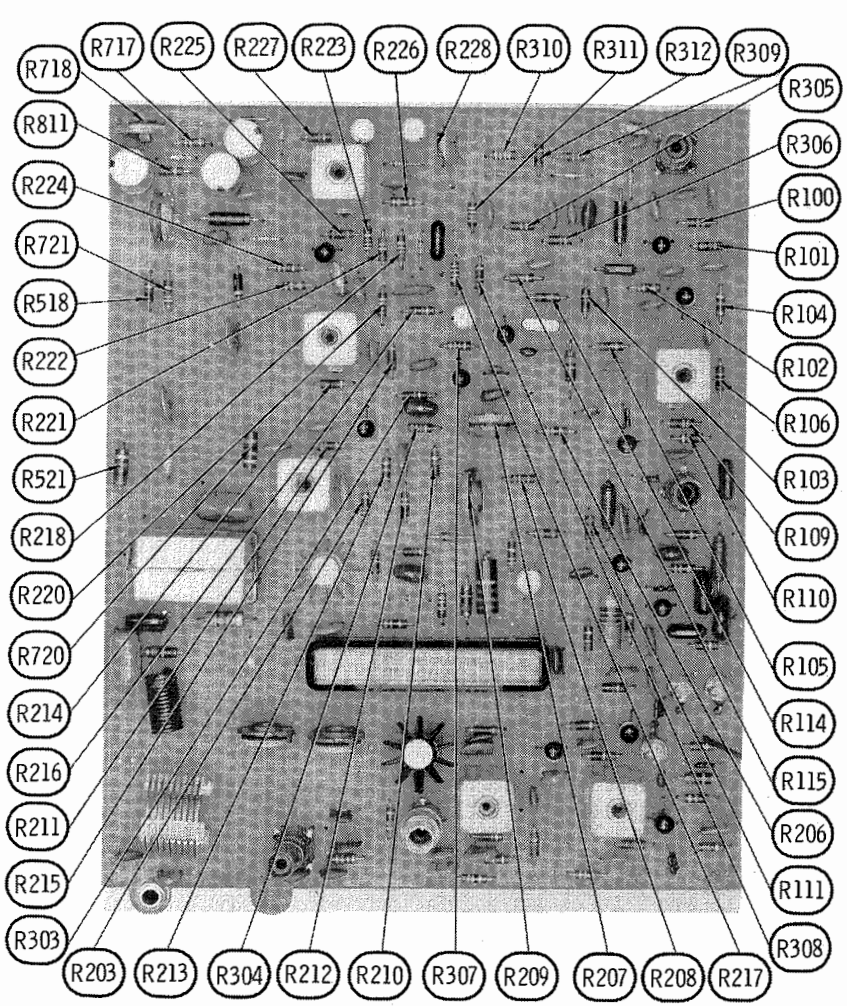

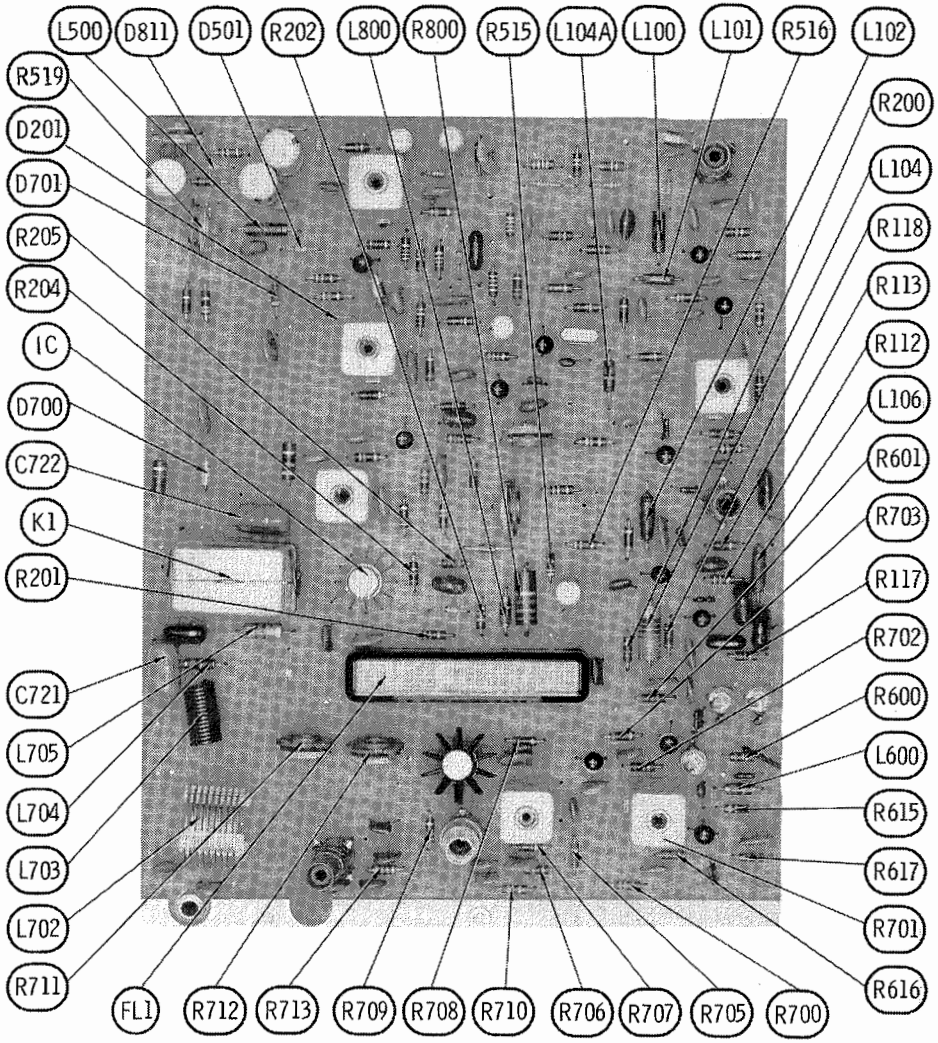

TRAM MODEL TITAN IV

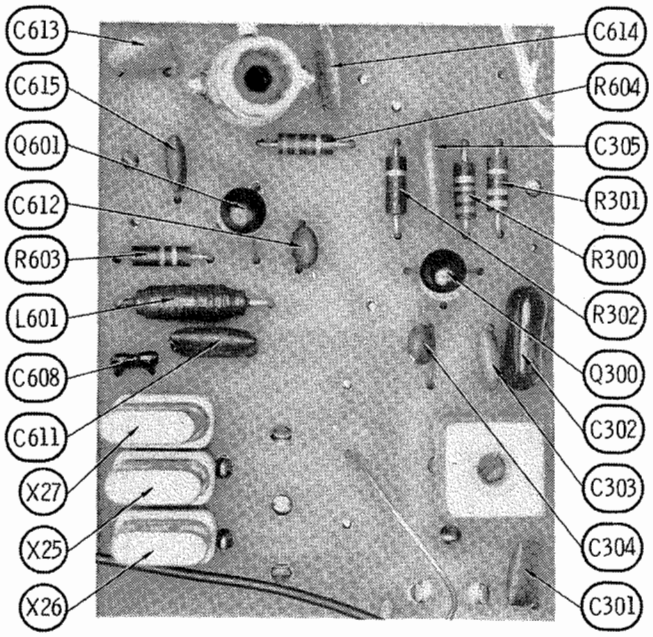
C613
C615
Q601
C612
R603
L601
C608
C611
X27
X25
X26
C614
R604
C305
R301
R300
R302
Q300
C302
C303
C304
C301

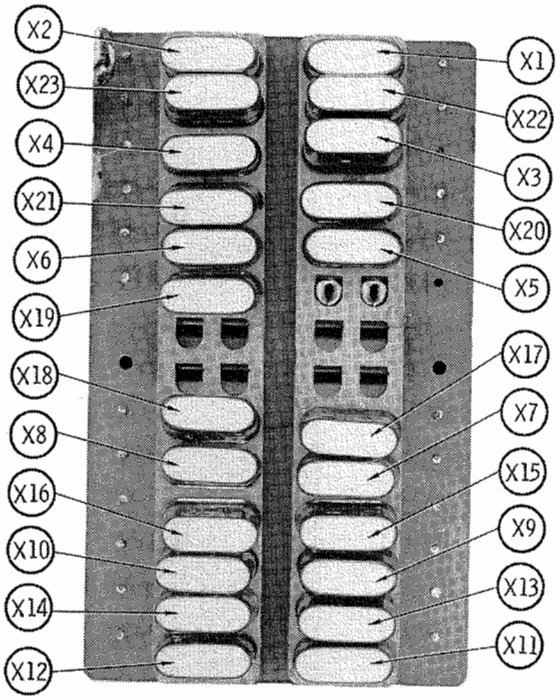
X2
X23
X4
X21
X6
X19
X18
X8
X16
X10
X14
X12
X1
X22
X3
X20
X5
X17
X7
X15
X9
X13
X11

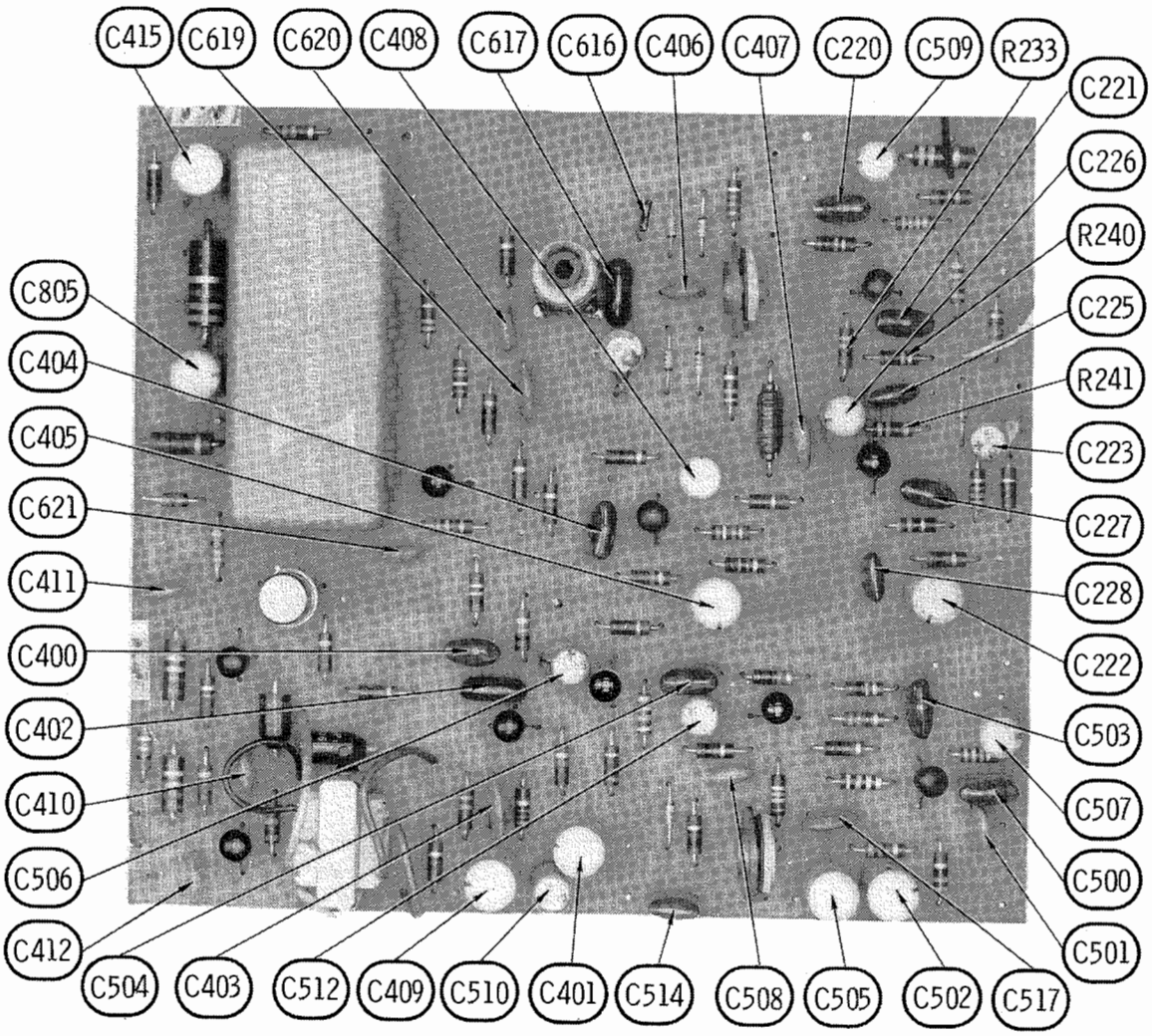
C415
C619
C620
C408
C617
C616
C406
C407
C220
C509
R233
C221
C226
R240
C225
R241
C223
C227
C228
C222
C503
C507
C500
C501
C805
C404
C405
C621
C411
C400
C402
C410
C506
C412
C504
C403
C512
C409
C510
C401
C514
C508
C505
C502
C517

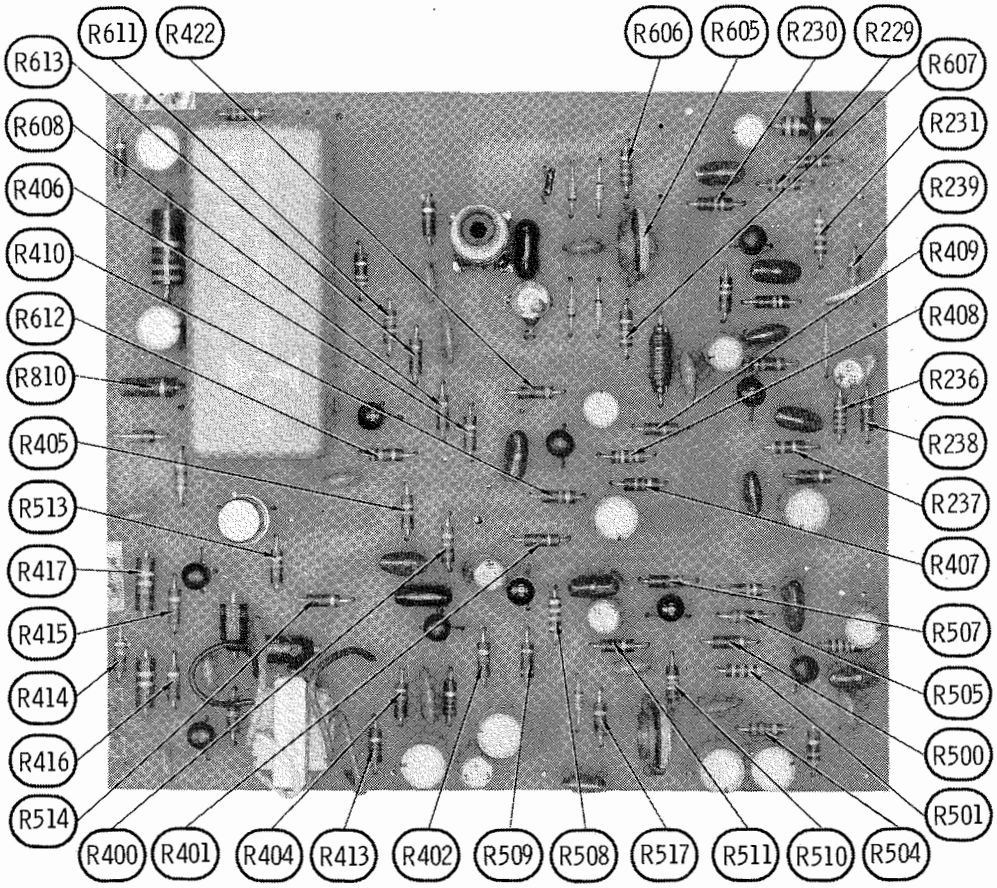
R611
R422
R606
R605
R230
R229
R613
R607
R608
R231
R406
R239
R410
R409
R612
R408
R810
R236
R405
R238
R513
R237
R417
R407
R415
R507
R414
R505
R416
R500
R514
R501
R400
R401
R404
R413
R402
R509
R508
R517
R511
R510
R504

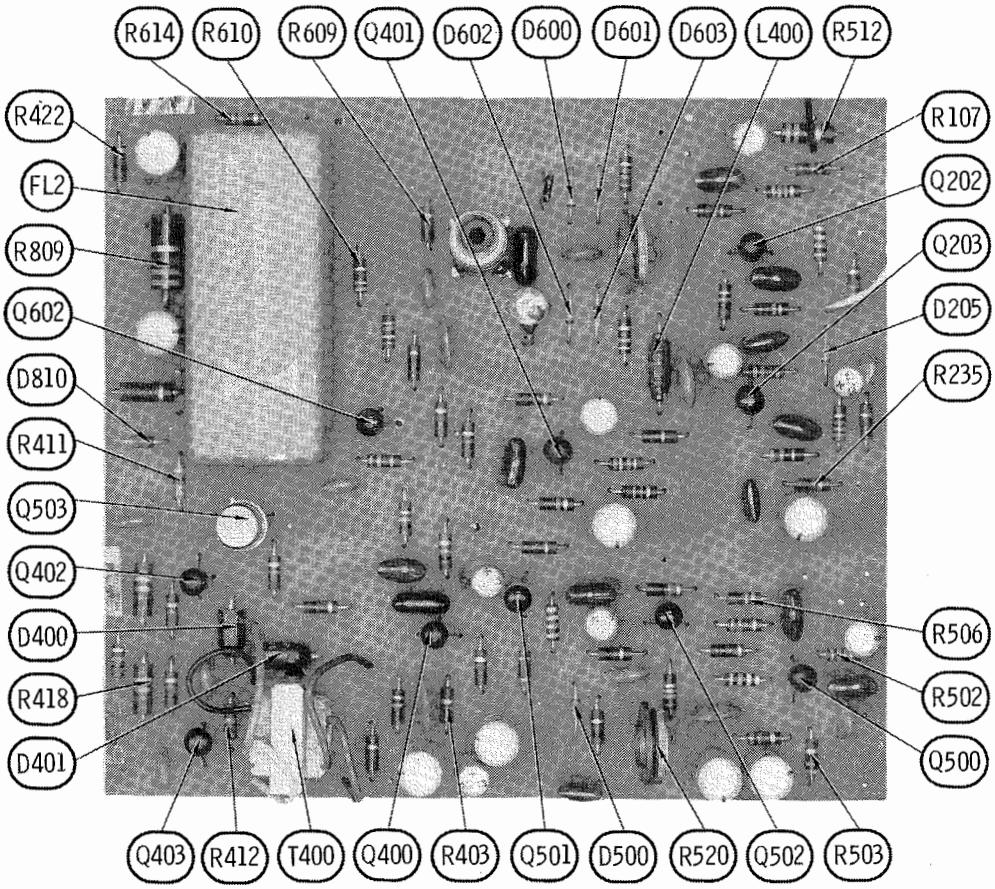
R614
R610
R609
Q401
D602
D600
D601
D603
L400
R512
R422
R107
FL2
Q202
R809
Q203
Q602
D205
D810
R235
R411
Q503
Q402
R506
D400
R502
R418
Q500
D401
Q403
R412
T400
Q400
R403
Q501
D500
R520
Q502
R503

PARTS LIST AND DESCRIPTION

(When ordering parts, state Model, Part Number, and Description.)

WIRING DATA

General-use Hook-up Wire	Use BELDEN No.	8530 (Solid) Available in 12 Colors
		8524 (Stranded) Available in 12 Colors
Shielded Antenna Lead	Use BELDEN No.	8214 Lowest-loss (RG-8/U Type)
		8237 Low-loss (RG-8/U)
		8240 (Solid) Miniature (RG-58/U)
		8259 (Stranded) Miniature (RG-58A/U)
Coiled Microphone Cable	Use BELDEN No.	8497 3-Conductor,1 Shielded,for Press-to-Talk (Neoprene)
		8496 3-Conductor,1 Shielded,for Press-to-Talk (Vinyl)
Ignition Noise Suppression	Use BELDEN No.	7300-Series Spark-Plug Sets
Bonding Strap	Use BELDEN No.	8661 (3/8 In.)

TUBES

AMPEREX		GENERAL ELECTRIC	RCA		SYLVANIA
ITEM No.	USE	TYPE	ITEM No.	USE	TYPE
V700	RF Final Amp	6GM5			

SEMICONDUCTORS

ITEM No.	TYPE / MFGR. No./PART No.	REPLACEMENT DATA						
		GENERAL ELECTRIC PART No.	INTERNATIONAL RECTIFIER PART No.	MALLORY PART No.	MOTOROLA PART No.	RCA PART No.	SPRAGUE PART No.	SYLVANIA PART No.
D100	1N4454	GE-300	D200	PTC214	HEPR0600	SK3100	RT218	ECG 177
D200	1N4454	GE-300	D200	PTC214	HEPR0600	SK3100	RT218	ECG 177
D201	1N4454	GE-300	D200	PTC214	HEPR0600	SK3100	RT218	ECG 177
D202	1N4454	GE-300	D200	PTC214	HEPR0600	SK3100	RT218	ECG 177
D203	1N4454	GE-300	D200	PTC214	HEPR0600	SK3100	RT218	ECG 177
D204	1N4454	GE-300	D200	PTC214	HEPR0600	SK3100	RT218	ECG 177
D205	1N4454	GE-300	D200	PTC214	HEPR0600	SK3100	RT218	ECG 177
D300	1N4454	GE-300	D200	PTC214	HEPR0600	SK3100	RT218	ECG 177
D301	1N4454	GE-300	D200	PTC214	HEPR0600	SK3100	RT218	ECG 177
D400	1N2069	GE-504A	5A40	PTC201	HEPR0053	SK3016	RT214	ECG 116
D401	1N2069	GE-504A	5A40	PTC201	HEPR0053	SK3016	RT214	ECG 116
D500	1N4454	GE-300	D200	PTC214	HEPR0600	SK3100	RT218	ECG 177
D501	1N4454	GE-300	D200	PTC214	HEPR0600	SK3100	RT218	ECG 177
D600	1N4454	GE-300	D200	PTC214	HEPR0600	SK3100	RT218	ECG 177
D601	1N4454	GE-300	D200	PTC214	HEPR0600	SK3100	RT218	ECG 177
D602	1N4454	GE-300	D200	PTC214	HEPR0600	SK3100	RT218	ECG 177
D603	1N4454	GE-300	D200	PTC214	HEPR0600	SK3100	RT218	ECG 177
D700	1N67 (A)	1N34AS	1N34A	PTC207	HEP134	SK3087		ECG 109
D701	1N67 (A)	1N34AS	1N34A	PTC207	HEP134	SK3087		ECG 109
D800	1N4739 9.1V Zener	GEZ0-9.1		PTC505	HEPZ0412	SK3060	RT240	ECG 139
D801	1N4005	GE-504A	806 or 5A60	PTC202	HEPR0054	SK3017A or SK3032	RT210 or RT215	ECG 116 or ECG 117
D802	1N4005	GE-504A or GEBR-600(1)	806 or 18084A (1)	PTC202 or PTC402 (1)	HEPR0054	SK3017A or SK3107 (1)	RT210 or RT215	ECG 116 or ECG 169 (1)
D803	1N4005	GE-504A or GEBR-600(1)	806 or 18084A (1)	PTC202 or PTC402 (1)	HEPR0054	SK3017A or SK3107 (1)	RT210 or RT215	ECG 116 or ECG 169 (1)
D804	1N4005	GE-504A or GEBR-600(1)	806 or 18084A (1)	PTC202 or PTC402 (1)	HEPR0054	SK3017A or SK3107 (1)	RT210 or RT215	ECG 116 or ECG 169 (1)
D805	1N4005	GE-504A or GEBR-600(1)	806 or 18084A (1)	PTC202 or PTC402 (1)	HEPR0054	SK3017A or SK3107 (1)	RT210 or RT215	ECG 116 or ECG 169 (1)
D806	F8200	GEBR-600 or GE-504A (4)	10084P or 18084A	PTC402 or PTC201 (4)	HEP177	SK3106 or SK3031 (4)	RT214(4) or RT215 (4)	ECG 168 or ECG 116 (4)
D810	1N4745 (A) 16V Zener		Z-1214	Z816	HEPZ0419		RT246	ECG 5075
D811	1N4454	GE-300	D200	PTC214	HEPR0600	SK3100	RT218	ECG 177
D812	1N752A 5.6V Zener	GEZ0-5.6	Z-1204	PTC502	HEPZ0407	SK3057	RT-236	ECG 136
IC	CA-3021							
Q100	LS5484	GE-FET-2	FE-100	PTC152	HEPF0021	SK3116	RT175	ECG 132
Q101	LS5484	GE-FET-2	FE-100	PTC152	HEPF0021	SK3116	RT175	ECG 132
Q102	LS5485	GE-FET-2	FE-100	PTC152	HEPF0021	SK3116	RT175	ECG 132
Q103	LS5485	GE-FET-2	FE-100	PTC152	HEPF0021	SK3116	RT175	ECG 132
Q104	LS5485	GE-FET-2	FE-100	PTC152	HEPF0021	SK3116	RT175	ECG 132
Q105	LS5484	GE-FET-2	FE-100	PTC152	HEPF0021	SK3116	RT175	ECG 132
Q200	LS5485	GE-FET-2	FE-100	PTC152	HEPF0021	SK3116	RT175	ECG 132
Q201	2N3904	GE-20	TR-25	PTC136	HEP736	SK3122	RT102	ECG 128
Q202	2N3904	GE-20	TR-25	PTC136	HEP736	SK3122	RT102	ECG 128
Q203	2N3904	GE-20	TR-25	PTC136	HEP736	SK3122	RT102	ECG 128
Q300	LS5485	GE-FET-2	FE-100	PTC152	HEPF0021	SK3116	RT175	ECG 132
Q301	LS5485	GE-FET-2	FE-100	PTC152	HEPF0021	SK3116	RT175	ECG 132
Q400	2N3904	GE-20	TR-25	PTC136	HEP736	SK3122	RT102	ECG 128
Q401	2N3904	GE-20	TR-25	PTC136	HEP736	SK3122	RT102	ECG 128
Q402	2N3904	GE-20	TR-25	PTC136	HEP736	SK3122	RT102	ECG 128
Q403	2N3904	GE-20	TR-25	PTC136	HEP736	SK3122	RT102	ECG 128
Q404	D44C88, 2N5295	GE-28 (7) GE-28 (7)	IRTR-55 (7) IRTR-55 (7)	PTC110 (7) PTC110 (7)	HEPS3023 (7) HEPS3023 (7)	SK3054 (7) SK0354 (7)	RT154 (7) RT154 (7)	ECG 186 (7) ECG 186 (7)
Q405	D44C88, 2N5295							
Q406	D44C88, 2N5295	GE-28 GE-28	IRTR-55 IRTR-55	PTC110 PTC110	HEPS3023 HEPS3023	SK3054 SK3054	RT154 RT154	ECG 186 ECG 186
Q500	2N3904	GE-20	TR-25	PTC136	HEP736	SK3122	RT102	ECG 128
Q501	LS5485	GE-FET-2	FE-100	PTC152	HEPF0021	SK3116	RT175	ECG 132

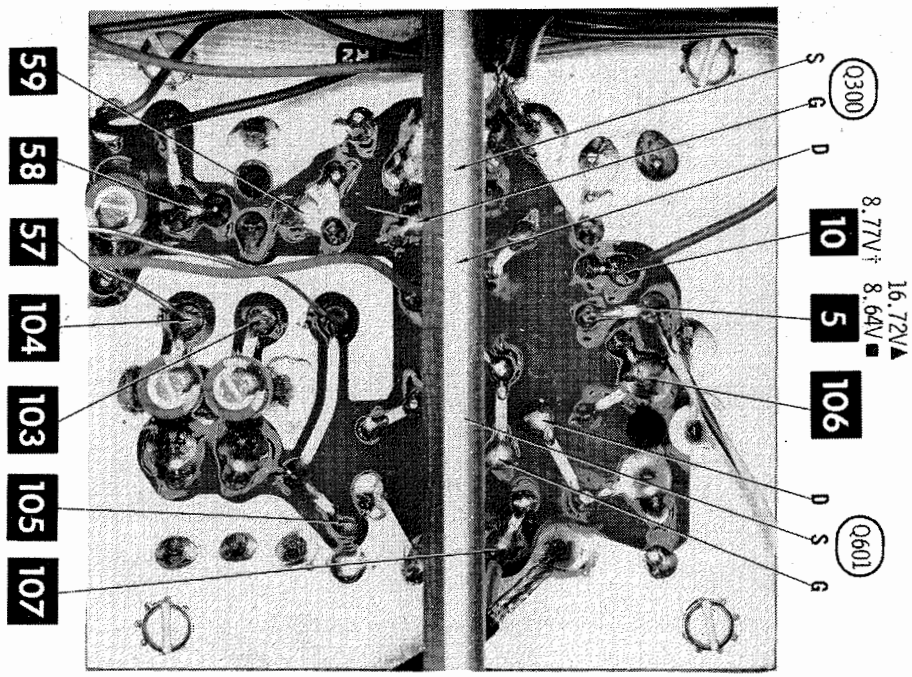

SEMICONDUCTORS

ITEM No.	TYPE / MFGR. No./PART No.	REPLACEMENT DATA						
		GENERAL ELECTRIC PART No.	INTERNATIONAL RECTIFIER PART No.	MALLORY PART No.	MOTOROLA PART No.	RCA PART No.	SPRAGUE PART No.	SYLVANIA PART No.
Q502	LS5485	GE-FET-2	FE-100	PTC152	HEPF0021	SK3116	RT175	ECG 132
Q503	2N1613	GE-18	TR-21	PTC144	HEP713	SK3024		ECG 128
Q600	LS5485	GE-FET-2	FE-100	PTC152	HEPF0021	SK3116	RT175	ECG 132
Q601	LS5485	GE-FET-2	FE-100	PTC152	HEPF0021	SK3116	RT175	ECG 132
Q602	2N3904	GE-20	TR-25	PTC136	HEP736	SK3122	RT102	ECG 128
Q603	2N3904	GE-20	TR-25	PTC136	HEP736	SK3122	RT102	ECG 128
Q700	LS5485	GE-FET-2	FE-100	PTC152	HEPF0021	SK3116	RT175	ECG 132
Q701	40082		IRTR-65		HEPS3001	SK3048		ECG 195
Q800	2N3055	GE-19	TR-26	PTC119	HEP247	SK3027	RT131	ECG 130

(1) A single unit replacement for all four bridge-circuit rectifiers.
(4) Four required.
(7) Two required - select matched pair.

PARTS LIST AND DESCRIPTION (CONTINUED)

(When ordering parts, state Model, Part Number, and Description.)

ELECTROLYTIC CAPACITORS

ITEM No.	RATING		REPLACEMENT DATA					
			MFGR. PART No.	ARCO PART No.	CENTRALAB PART No.	CORNELL-DUBILIER PART No.	MALLORY PART No.	SPRAGUE PART No.
C216	5	15V		RME-A-E-005	EP15-5	PC5-50	VTT4R7A50	EV-1319
C219	1	15V		RME-A-E-001	EP15-2	PC1-50	MTV1CB50	EV-1315
C222	100	15V		RME-E-E-100	EP15-100	PC100-16	MTV100CD15	EV-1230
C223	10	15V		RME-B-E-010	EP15-10	PC10-25	VTT10A25	EV-1222
C226	30	15V		ME-3-E-030	EP15-25	PC30-25	MTV30CB25	EV-1325
C309	30	15V		ME-3-E-030	EP15-25	PC30-25	MTV30CB25	EV-1325
	5							
C401	100	15V		RME-E-E-100	EP15-100	PC100-16	MTV100CD15	EV-1230
C405	100	15V		RME-E-E-100	EP15-100	PC100-16	MTV100CD15	EV-1230
C408	5	15V		RME-A-E-005	EP15-5	PC5-50	VTT4R7A50	EV-1319
C409	100	15V		RME-E-E-100	EP15-100	PC100-16	MTV100CD15	EV-1230
C413	4	250V		ME-6-R-005		WBR4-250	TC50XB	TVA-1501
C415	100	15V		RME-E-E-100	EP15-100	PC100-16	MTV100CD15	EV-1230
C502	100	15V		RME-E-E-100	EP15-100	PC100-16	MTV100CD15	EV-1230
C505	100	15V		RME-E-E-100	EP15-100	PC100-16	MTV100CD15	EV-1230
C506	10	15V		RME-B-E-010	EP15-10	PC10-25	VTT10A25	EV-1222
C507	30	15V		ME-3-E-030	EP15-25	PC30-25	MTV30CB25	EV-1325
	100	15V						
C509	30	15V		ME-3-E-030	EP15-25	PC30-25	MTV30CB25	EV-1325
C510	10	15V		RME-B-E-010	EP15-10	PC10-25	VTT10A25	EV-1222
C511	5	15V		RME-A-E-005	EP15-5	PC5-50	VTT4R7A50	EV-1319
C512	10	15V		RME-B-E-010	EP15-10	PC10-25	VTT10A25	EV-1222
	30							
C513	100	15V		RME-E-E-100	EP15-100	PC100-16	MTV100CD15	EV-1230
C802	4	150V		ME-3-N-004		WBR4-150	TT150X4	TVA-1402
C803a	40	450V		CTM-3772		CC0350A	FP337.1A	TVL-3787
b	40	450V						
c	40	450V						
C804a	100	50V		CTM-2114		BB0085A	WP202.5A	TVL-2326
b	100	50V						
C805	100	15V		RME-E-E-100	EP15-100	PC100-16	MTV100CD15	EV-1230
C806	100	15V		RME-E-E-100	EP15-100	PC100-16	MTV100CD15	EV-1230
C807	100	15V		RME-E-E-100	EP15-100	PC100-16	MTV100CD15	EV-1230

CAPACITORS

ITEM No.	RATING			MFGR. PART No.	REPLACEMENT DATA				
					ARCO/ELMENCO PART No.	CENTRALAB PART No.	CORNELL-DUBILIER PART No.	MALLORY PART No.	SPRAGUE PART No.
C1	.002	1KV			CCD-202	DD-202	GP2000	GP220	10TS-020
C100	.002	1KV			CCD-222	DD-222	GP2200	GP222	10TS-022
C101	33	25V	10%		CCTO-330	DTZ-33	NP033	CN0433	10TCC-Q33
C102	50	25V	10%		CCTO-510	DTZ-50	NP050	CN0450	10TCC-Q50
C103	.001	25V			CCD-102	DD-102	GP1000	SM210	2SS-010
C104	.001	25V			CCD-102	DD-102	GP1000	SM210	2SS-010
C105	.001	25V			CCD-102	DD-102	GP1000	SM210	2SS-010
C106	.001	25V			CCD-102	DD-102	GP1000	SM210	2SS-010
C107	.001	25V			CCD-102	DD-102	GP1000	SM210	2SS-010
C108	.001	25V			CCD-102	DD-102	GP1000	SM210	2SS-010
C109	.001	25V			CCD-102	DD-102	GP1000	SM210	2SS-010
C110	12	50V	5%		DM-15-120J			SX412	
C111	1 25V	NPO	±.25pf					CN0510	10TCC-V10
C112	.002	1KV			CCD-202	DD-202	GP2000	GP220	10TS-020
C113	.005	25V			CCD-502	CK-502	MGP005	TA250	TG-050
C114	12	50V	5%		DM-15-120J			SX412	
C115	68	500V	5%		DM-15-680J	CPR-68J	CD15ED680J03	SX468	424MC68R0J501
C116a									
C116b									
C117	(1)								
C118	12	50V	5%		DM-15-120J			SX412	
C119	5	50V	5%		DM-15-050D		CD15CD050D03	SX550	
C120	.047	100V	10%		10P-2-473		DPMS6S47	EWF1A147	225P47391W03
C121	22	50V	5%		DM-15-220J	CPR-22J	CD15ED220J03	SX422	
C122	22	50V	5%		DM-15-220J	CPR-22J	CD15ED220J03	SX422	
C123	680	25V			CCD-681	DD-681	GP680	GP368	10TS-T68
C125	15	N750 25V			CCTN-150	DTN-15	N15	CN7415	10TCU-Q15
C126	51	500V	5%		DM-15-510J		CD15ED510J03		424MC51R0J501
C127	3-12			A-0085					
C128	430		5%		DM-19-431J	CPR-430J	CD15FD431J03	SX343	MS-343
C129	430		5%		DM-19-431J	CPR-430J	CD15FD431J03	SX343	MS-343
C130	51	500V	5%		DM-15-510J		CD15ED510J03		424MC51R0J501
C131	.005	25V			10P-1-502	CPR-500DJ	DPMS605	EWF1A250	6PS-050
C200	115	50V	5%						
C201	160	50V	5%		DM-19-161J	CPR-160J		SX316	MS-316
C202	.01	25V			CCD-103	CK-103	MGP01	TA110	TG-S10
C203	130	50V	5%		DM-15-131J	CPR-130J		SX313	MS-313
C204	.01	25V			CCD-103	CK-103	MGP01	TA110	TG-S10
C205	.1	100V	10%		10P-2-104		DPMS2P1	EWF1A010	225P10491W03
C206	.01	25V			CCD-103	CK-103	MGP01	TA110	TG-S10
C207	33	25V	10%		CCTO-330	DTZ-33	NP033	CN0433	10TCC-Q33
C208	33	25V	10%		CCTO-330	DTZ-33	NP033	CN0433	10TCC-Q33
C209	.01	25V			CCD-103	CK-103	MGP01	TA110	TG-S10
C210	.01	25V			CCD-103	CK-103	MGP01	TA110	TG-S10
C211	.02	25V			CCD-203	CK-203	MGP02	TA120	TG-S20

CAPACITORS (cont)

ITEM No.	RATING			MFGR. PART No.	REPLACEMENT DATA				
					ARCO/ELMENCO PART No.	CENTRALAB PART No.	CORNELL-DUBILIER PART No.	MALLORY PART No.	SPRAGUE PART No.
C212	270	50V	5%		DM-190271J	CPR-270J	CD15FD271J03	SX327	424MF2700J501
C213	330	50V			CCD-331	DD-331	GP330	GP333	10TS-T33
C214	16	125V	5%		DM-15-150J			SX415	
C215	.01	25V			CCD-103	CK-103	MGP01	TA110	TG-S10
C217	.01	25V			CCD-103	CK-103	MGP01	TA110	TG-S10
C218	115	50V	5%						
C220	.1	100V	10%		10P-2-104		DPMS2P1	EWF1A010	225P10491W03
C221	.1	100V	10%		10P-2-104		DPMS2P1	EWF1A010	225P10491W03
C224	.047	100V	10%		10P-2-473		DPMS6S47	EWF1A147	225P47391W03
C225	.047	100V	10%		10P-2-473		DPMS6S47	EWF1A147	225P47391W03
C227	.082	100V	10%		60P-4-823		DPMS6S82		6PS-S82
C228	.047	100V	10%		10P-2-473		DPMS6S47	EWF1A147	225P47391W03
C300	2.7-20								
C301	130	50V	5%		DM-15-131J	CPR-130J		SX313	MS-313
C302	430	500V	5%		DM-19-431J	CPR-430J	CD15FD431J03	SX343	MS-343
C303	.001	25V			CCD-102	DD-102	GP1000	SM210	2SS-010
C304	43	50V	5%		DM-15-430J	CPR-43J	CD15ED430J03	SX444	
C305	.01	25V			CCD-103	CK-103	MGP01	TA110	TG-S10
C306	2 25V	NPO	±.25			DTZ-2R2	NP02P2	CN0522	10TCC-V22
C307	2 25V	NPO	±.25			DTZ-2R2	NP02P2	CN0522	10TCC-V22
C308	.1	100V	10%		10P-2-104		DPMS2P1	EWF1A010	225P10491W03
C310	.001	25V			CCD-102	DD-102	GP1000	SM210	2SS-010
C311	.001	25V			CCD-102	DD-102	GP1000	SM210	2SS-010
C312	.001	25V			CCD-102	DD-102	GP1000	SM210	2SS-010
C313	.047	100V	10%		10P-2-473		DPMS6S47	EWF1A147	225P47391W03
C400	.068	50V	10%		40P-3-683		DPMS6S68	EWF4168	4PS-S68
C402	100	100V	5%		DM-15-101J	CPR-100J	CD15FD101J03	SX310	424MC100DJ501
C403	.02	25V			CCD-203	CK-203	MGP02	TA120	TG-S20
C404	.1	100V	10%		10P-2-104		DPMS2P1	EWF1A010	225P10491W03
C406	.001	25V			CCD-102	DD-102	GP1000	SM210	2SS-010
C407	.01	25V			CCD-103	CK-103	MGP01	TA110	TG-S10
C410	.002	25V			CCD-202	DD-202	GP2000	GP220	2SS-020
C411	.001	25V			CCD-102	DD-102	GP1000	SM210	2SS-010
C412	.001	25V			CCD-102	DD-102	GP1000	SM210	2SS-010
C414	.001	500V			CCD-102	DD-102	GP1000	GP210	10TS-010
C500	.1	100V	10%		10P-2-104		DPMS2P1	EWF1A010	225P10491W03
C501	.002	25V			CCD-202	DD-202	GP2000	GP220	2SS-020
C503	.1	100V	10%		10P-2-104		DPMS2P1	EWF1A010	225P10491W03
C504	.1	100V	10%		10P-2-104		DPMS2P1	EWF1A010	225P10491W03
C508	.002	25V			CCD-202	DD-202	GP2000	GP220	2SS-020
C514	.047	100V	10%		10P-2-473		DPMS6S47	EWF1A147	225P47391W03
C515	.001	25V			CCD-102	DD-102	GP1000	SM210	2SS-010
C516	2 25V	N750	10%		CCTN-050	DTN-5	N5	CN7550	10TCU-V50
C517	.01	25V			CCD-103	CK-103	MGP01	TA110	TG-S10
C600	12	50V	5%		DM-15-120J			SX412	
C601	2.7-20								
C602	2.7-20								
C603	43	50V	5%		DM-15-430J	CPR-43J	CD15ED430J03	SX444	
C604	2.7-20								
C605	.002	25V			CCD-202	DD-202	GP2000	GP220	2SS-020
C606	15	50V	5%		DM-15-150J			SX415	
C607	22	50V	5%		DM-15-220J	CPR-22J	CD15ED220J03	SX422	
C608	5	50V	5%		DM-15-050D		CD15CD050D03	SX550	
C609	2.7-20								
C610	2.7-20								
C611	270	50V	5%		DM-19-271J	CPR-270J	CD15FD271J03	SX327	424ME2700J501
C612	12	50V	5%		DM-15-120J			SX412	
C613	330	25V			CCD-331	DD-331	GP330	GP333	10TS-T33
C614	.005	25V			CCD-502	CK-502	MGP005	TA250	TG-050
C615	115	50V	5%						
C616	12	50V	5%		DM-15-120J			SX412	
C617	390	500V	5%		DM-19-391J	CPR-390J	CD15FD391J03	SX339	424ME3900J501
C618	2.7-20								
C619	.005	1KV			CCD-502	DD-502	GP5000	JF250	10TS-050
C620	.002	25V			CCD-202	DD-202	GP2000	GP220	2SS-020
C621	.002	25V			CCD-202	DD-202	GP2000	GP220	2SS-020
C622	43	50V	5%		DM-15-430J	CPR-43J	CD15ED430J03	SX444	
C623	.005	25V			CCD-502	CK-502	MGP005	TA250	TG-050
C700	16	125V			DM-15-150J			SX415	
C701	.002	25V			CCD-202	DD-202	GP2000	GP220	2SS-020
C702	5	25V	10%				NP05		10TCC-V50
C703	.001	25V			CCD-102	DD-102	GP1000	SM210	2SS-010
C704	.002	25V			CCD-202	DD-202	GP2000	GP220	2SS-020
C705	.01	25V			CCD-103	CK-103	MGP01	TA110	TG-S10
C706	.001	25V			CCD-102	DD-102	GP1000	SM210	2SS-010
C707	.002	1KV			CCD-202	DD-202	GP2000	GP220	10TS-020
C708	.01	25V			CCD-103	CK-103	MGP01	TA110	TG-S10
C709	.002	1KV			CCD-202	DD-202	GP2000	GP220	10TS-020
C710	.002	1KV			CCD-202	DD-202	GP2000	GP220	10TS-020
C711	82	50V	5%		DM-15-820J	CPR-82J	CD15ED820J03	SX482	424MC82R0J501
C712	.002	500V			CCD-202	DD-202	GP2000	GP220	10TS-020
C713	33	500V			CCTO-330	DTZ-33	NP033	CN0433	10TCC-Q33
C714	2 NPO	500V				DTZ-2R2	NP02P2	CN0522	10TCC-V22
C715	.002	500V			CCD-202	DD-202	GP2000	GP220	10TS-020
C716	.002	500V			CCD-202	DD-202	GP2000	GP220	10TS-020
C717	.001	500V			CCD-102	DD-102	GP1000	GP210	10TS-010
C718	5-25								
C719	100-500								
C720	130	500V	5%		DM-15-131J	CPR-130J		SX313	MS-313
C721	.001	1KV	10%		160P-2-102		DPMS2001	PVC1621	10PS-010
C722	.001	1KV	10%		160P-2-102		DPMS2001	PVC1621	10PS-010
C723	.005	25V			CCD-502	CK-502	MGP005	TA250	TG-050
C724	.005	25V			CCD-502	CK-502	MGP005	TA250	TG-050
C800a	.0047	500V			CCD-472	DD-472G	GP4700	JF247	10TS-047
C800b	.0047	500V			CCD-472	DD-472G	GP4700	JF247	10TS-047
C801	.22	400V			40P-5-224		DPMS4P22	EWF4022	4PS-P22

(1) Part of C116.

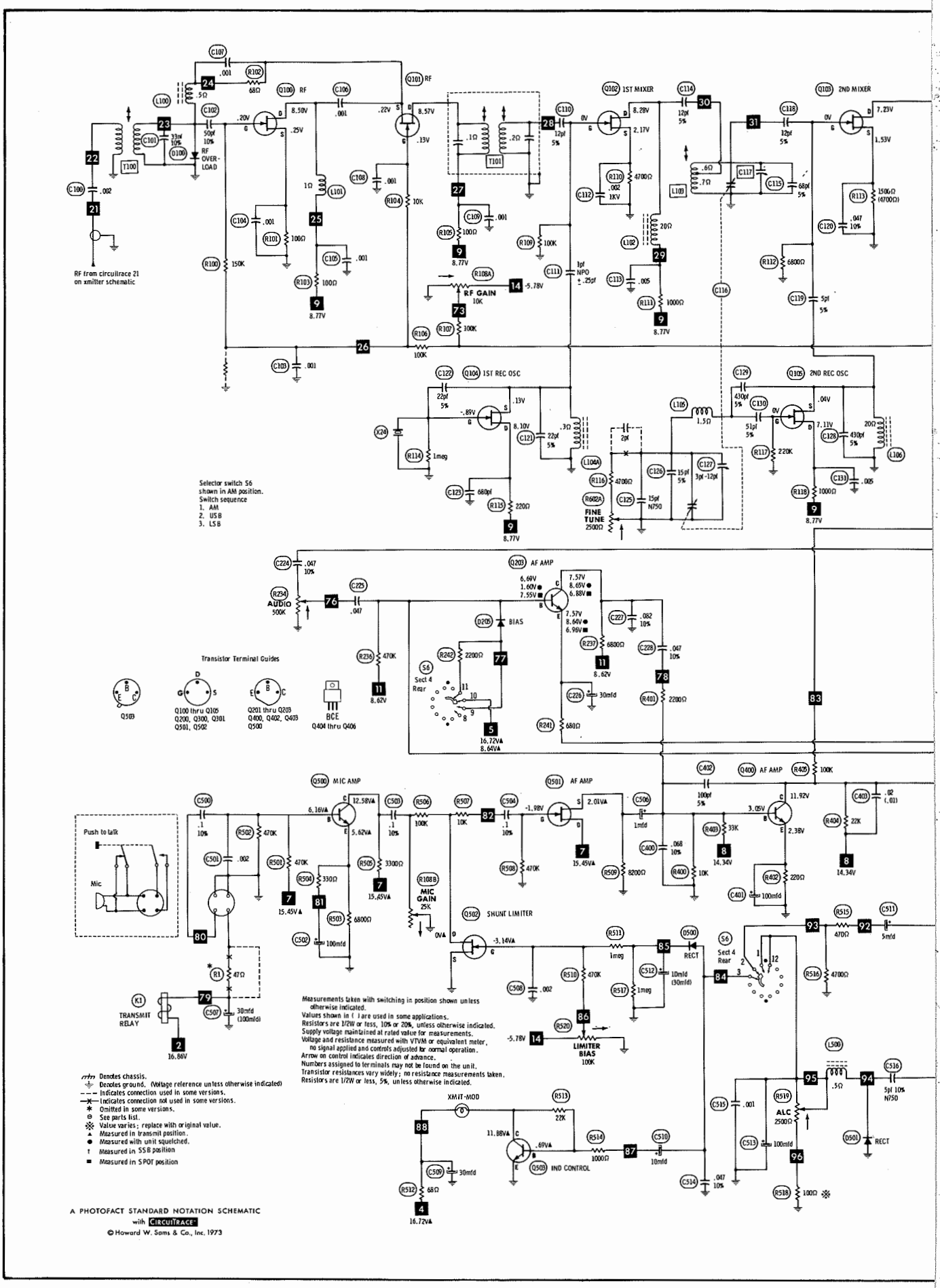
Q100 RF
Q101 RF
Q102 1ST MIXER
Q103 2ND MIXER
Q104 1ST REC OSC
Q105 2ND REC OSC
Q203 AF AMP
Q500 MIC AMP
Q501 AF AMP
Q400 AF AMP
Q502 SHUNT LIMITER
Q503 IND CONTROL
RF OVER-LOAD
RF from circuitrace 21 on xmitter schematic
RF GAIN 10K
FINE TUNE 2500Ω
AUDIO 500K
BIAS
MIC GAIN 25K
LIMITER BIAS 100K
ALC 2500Ω
Selector switch S6 shown in AM position.
Switch sequence
1. AM
2. USB
3. LSB
Transistor Terminal Guides
Q503
Q100 thru Q105
Q200, Q300, Q301
Q501, Q502
Q201 thru Q203
Q400, Q402, Q403
Q500
Q404 thru Q406
Push to talk
Mic
TRANSMIT RELAY
RECT
XMIT-MOD
Measurements taken with switching in position shown unless otherwise indicated.
Values shown in ( ) are used in some applications.
Resistors are 1/2W or less, 10% or 20%, unless otherwise indicated.
Supply voltage maintained at rated value for measurements.
Voltage and resistance measured with VTVM or equivalent meter, no signal applied and controls adjusted for normal operation.
Arrow on control indicates direction of advance.
Numbers assigned to terminals may not be found on the unit.
Transistor resistances vary widely; no resistance measurements taken.
Resistors are 1/2W or less, 5%, unless otherwise indicated.
Denotes chassis.
Denotes ground. (Voltage reference unless otherwise indicated)
Indicates connection used in some versions.
Indicates connection not used in some versions.
Omitted in some versions.
See parts list.
Value varies; replace with original value.
Measured in transmit position.
Measured with unit squelched.
Measured in SSB position
Measured in SPOT position
A PHOTOFACT STANDARD NOTATION SCHEMATIC
with CIRCUITRACE
© Howard W. Sams & Co., Inc. 1973

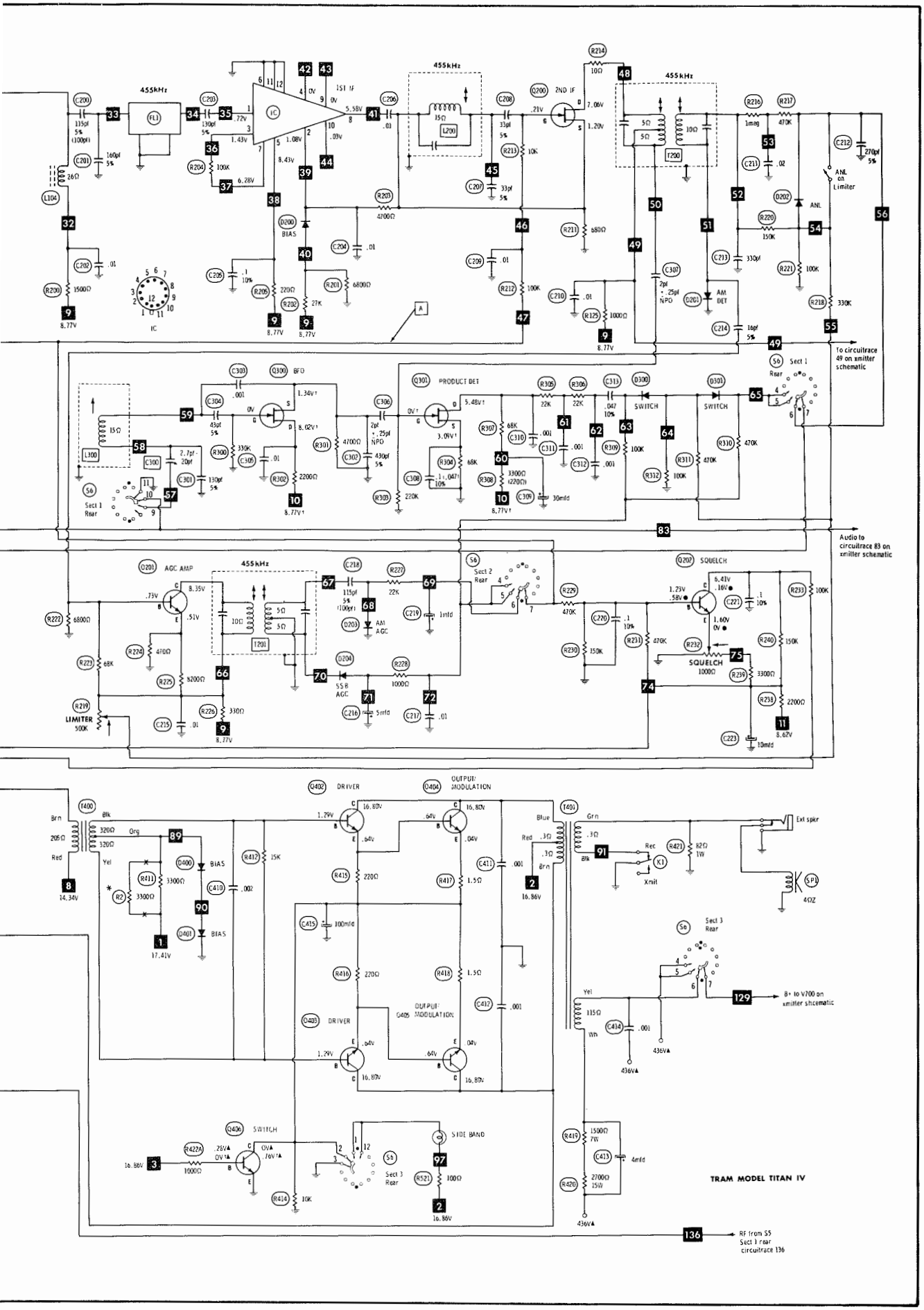
455kHz
FL1
IC
1ST IF
2ND IF
BIAS
ANL
AM DET
ANL on Limiter
To circuitrace 49 on xmitter schematic
BFO
PRODUCT DET
SWITCH
Sect 1 Rear
Audio to circuitrace 83 on xmitter schematic
AGC AMP
AM AGC
SSB AGC
LIMITER 500K
SQUELCH
DRIVER
OUTPUT MODULATION
Ext spkr
Rec
Xmit
Sect 3 Rear
8+ to V700 on xmitter shcematic
SWITCH
SIDE BAND
TRAM MODEL TITAN IV
RF from S5 Sect 3 rear circuitrace 136

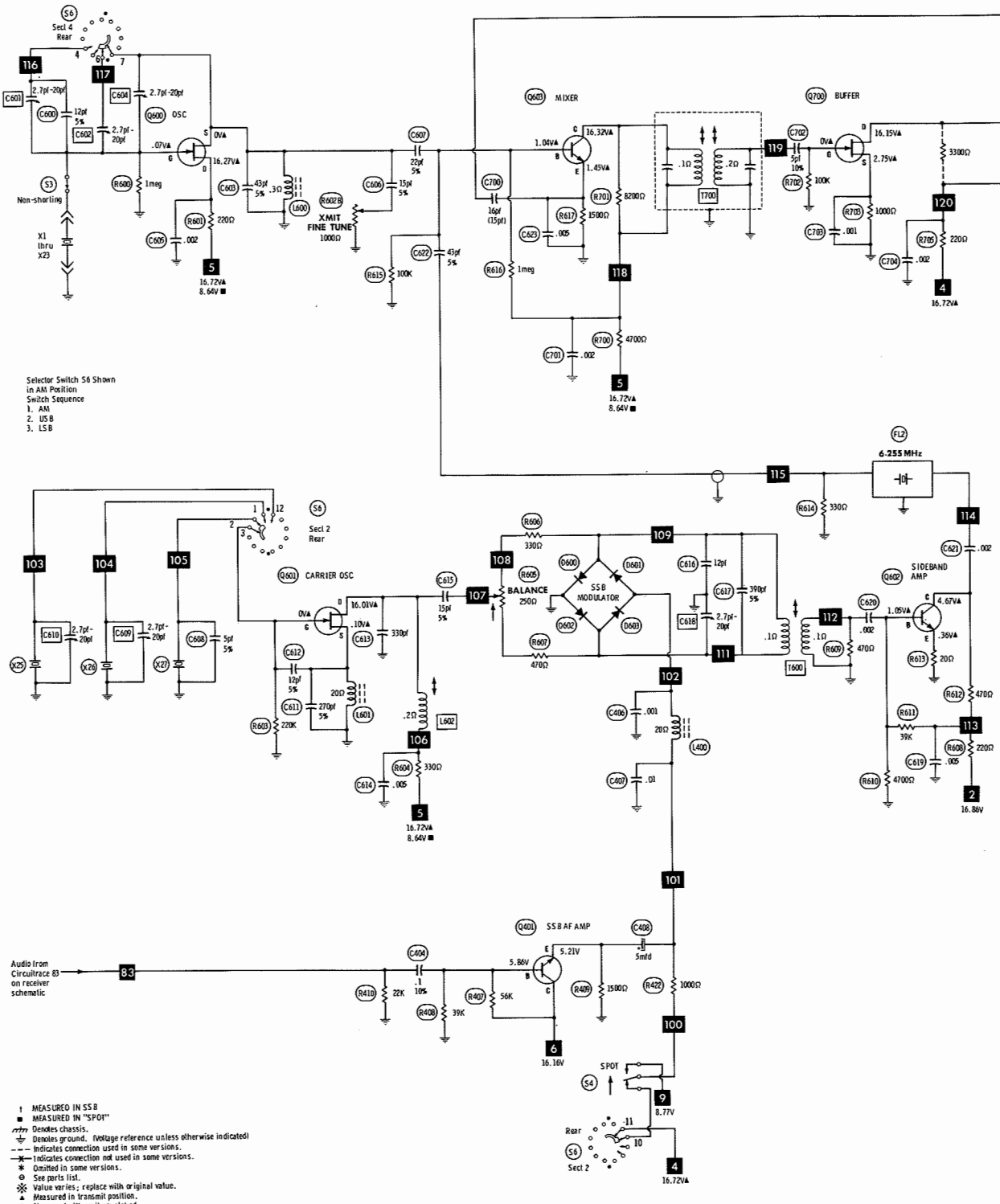

↑ MEASURED IN SSB
■ MEASURED IN "SPOT"
Denotes chassis.
Denotes ground. (Voltage reference unless otherwise indicated)
Indicates connection used in some versions.
Indicates connection not used in some versions.
* Omitted in some versions.
⊖ See parts list.
※ Value varies; replace with original value.
▲ Measured in transmit position.
● Measured with unit squelched.
NC No Connection.
Measurements taken with switching in position shown unless otherwise indicated.
Values shown in ( ) are used in some applications.
Resistors are 1/2W or less, 10% or 20%, unless otherwise indicated.
Supply voltage maintained at rated value for measurements.
Voltage and resistance measured with VTVM or equivalent meter, no signal applied and controls adjusted for normal operation.
Arrow on control indicates direction of advance.
Numbers assigned to terminals may not be found on the unit.
Transistor resistances vary widely; no resistance measurements taken.
Resistors are 1/2W or less, 5%, unless otherwise indicated.

A PHOTOFACT STANDARD NOTATION SCHEMATIC
with CIRCUITRACE

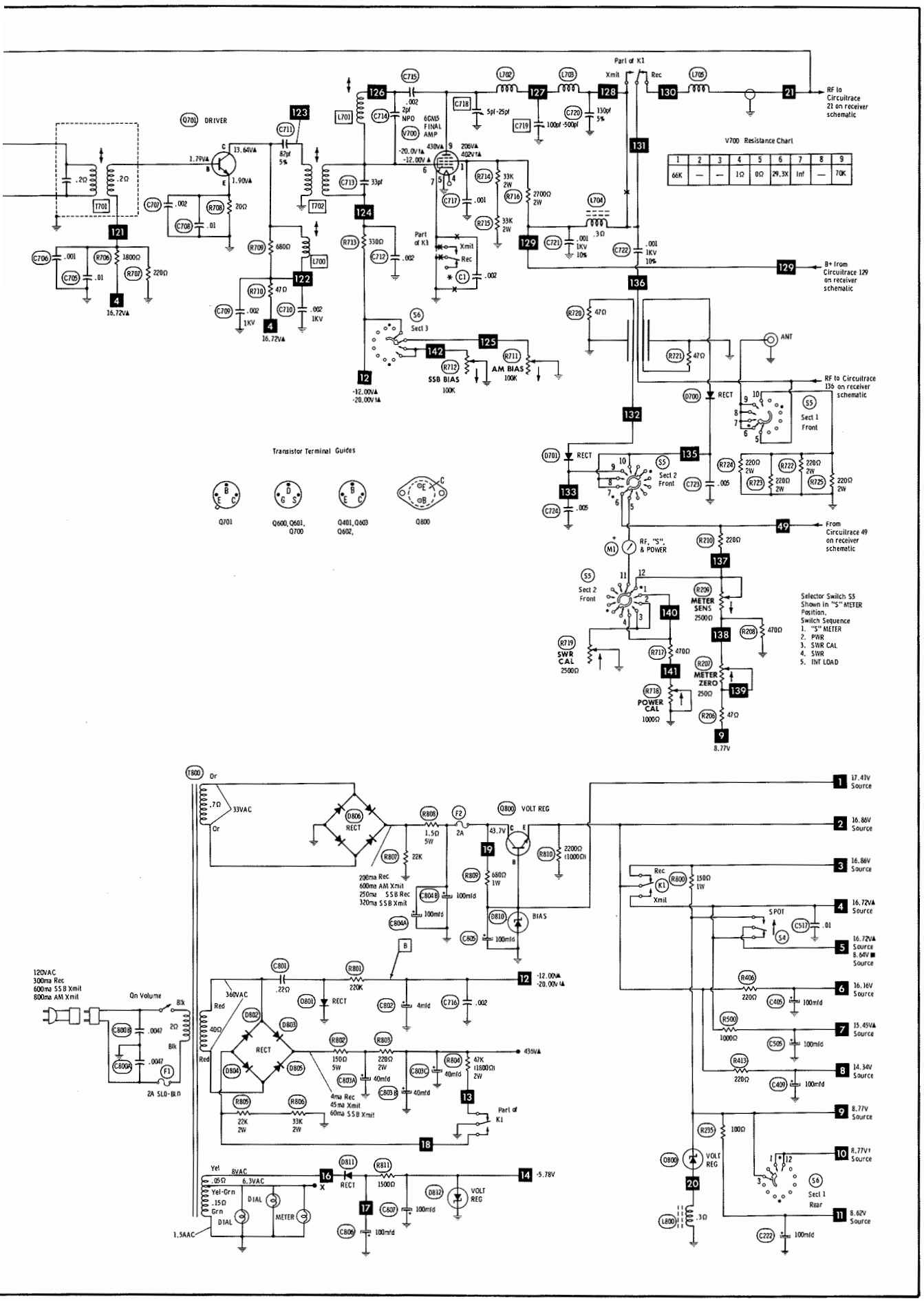
Part of K1
Xmit
Rec
RF to Circuitrace 21 on receiver schematic
Q701 DRIVER
6GN5 FINAL AMP
V700 Resistance Chart
B+ from Circuitrace 129 on receiver schematic
Part of K1
Sect 3
SSB BIAS 100K
AM BIAS 100K
ANT
RF to Circuitrace 136 on receiver schematic
Sect 1 Front
Transistor Terminal Guides
Q701
Q600, Q601, Q700
Q401, Q603 Q602,
Q800
From Circuitrace 49 on receiver schematic
RF, "S", & POWER
Sect 2 Front
METER SENS 2500Ω
SWR CAL 2500Ω
METER ZERO 250Ω
POWER CAL 1000Ω
Selector Switch S5 Shown in "S" METER Position.
Switch Sequence
1. "S" METER
2. PWR
3. SWR CAL
4. SWR
5. INT LOAD
VOLT REG
BIAS
120VAC 300ma Rec 600ma SSB Xmit 800ma AM Xmit
On Volume
2A SLO-BLO
200ma Rec 600ma AM Xmit 250ma SSB Rec 320ma SSB Xmit
4ma Rec 45ma Xmit 60ma SSB Xmit
Sect 1 Rear
17.41V Source
16.86V Source
16.86V Source
16.72VA Source
16.72VA Source
8.66V Source
16.16V Source
15.45VA Source
14.34V Source
8.77V Source
8.77V Source
8.62V Source
-12.00VA -20.00VA
-5.78V

PARTS LIST AND DESCRIPTION (CONTINUED)

(When ordering parts, state Model, Part Number, and Description.)

CONTROLS (All wattages 1/2 watt, or less, unless listed)

ITEM No.	FUNCTION	RESIST-ANCE	REPLACEMENT DATA				
			MFGR. PART No.	CENTRALAB PART No.	CLAROSTAT PART No.	CTS—IRC PART No.	MALLORY PART No.
R108a	RF Gain	10K	A-0335-2	F1-10K, R2-25K, FFS100, RFS010		QJ-2812R (2)	P14L, 3014, RU253A, OX625, IS1000
b	Mic Gain	25K					
R207	"S" Meter Zero	250	A-0221-1 (TL6388)	TSV-250 or T-300		X201R251B	MTC251L1
R209	"S" Meter Sensitivity	2500	A-0221-3 (TL6387)	TSV-2 T-2500	C-252	X201R252B	MTC252L1
R219	Noise Limiter/ Switch	500K	A-0093-2 (LH5378)	F1-500K, SRS010, KR-1	A47-500K-S, RS-2, SWE-12 or [NP-500K-S, UP-A-400, NWE-12]	B11-133, SK3, 76-1 or [BU1, CF16, SS3, GC]*	UA55L, SL2500 US41 or [RU55L, SL38, SL2500, US41] or [U50, US26]
R232	Squelch	1000	A-0133-8 (VA2817)	F1-1000, SRS010	A47-1000-S, RS-2 or [NP-1000-S, UP-A-400]	B11-108, SK3 or [BU1, CF6, SS3, OC1]*	UA13L, SL2500 or [RU13L, SL38, SL2500] or U4
R234	Volume/(Audio) Switch	500K	A-0093-1 (LF4422)	F2-500K, SRS010, KR-1	A47-500K-Z, RS-2, SWE-12 or [NP-500K-Z, UP-A-400, NWE-12]	B13-123, SK3, 76-1 or [BU1, CF25, SS3, GC]*	UA55A, SL2500, SL2500, US41 or [RU55A, SL38, SL2500, US41] or [U48, US26]
R519	ALC	2500	A-0221-3 (TL6387)	TSV-2.5K or T-2500	C-252	X201R252B	MTC252L1
R520	Bias	100K	A-0021-4 (TS8859)	TSV-100K or T-100K	C-104	X201R104B	MTC15L1
R602a	Rec. Fine Tuning	2500	A-0335-1 (WB2039)	F1-2500, R1-1000, FFS010, RFS100	NP-2500-S, NR-1000-S, UPC-A-101(1), UP-D-100	QJ2757R (3)	P252L, 3014, RU13L, OX625, IS1000
b	Transmit Fine Tuning	1000					
R605	Balance	250	A-0221-1 (TL6388)	TSV-250 or T-300		X201R251B	MTC251L1
R711	Bias	100K	A-0221-4 (TS8859)	TSV-100K or T-100K	C-104	X201R104B	MTC15L1
R712	Bias	100K	A-0221-4 (TS8859)	TSV-100K or T-100K	C-104	X201R104B	MTC15L1
R718	Power Calibrate	1000	A-0221-2 (TS8858)	TSV-1K or T-1000	C-102	X201R102B	MTC13L1
R719	"SWR" Calibrate	2500	A-0314 (308440)	JC-252			

(2) "CONCENTRIKIT" Equivalent: K-15 Kit with base elements & shafts: B11-116, P14-019 (Panel) B13-120, R1-028 (Rear)

"SNAPTROL" Equivalent: BU4, CF9, CF60, SF2, SR3, OC1

(3) "CONCENTRIKIT" Equivalent: K-15 Kit with base elements & shafts: B11-111, P14-019 (Panel) B11-108, R1-028 (Rear)

"SNAPTROL" Equivalent: BU4, CF86, CR2, SF2, SR3, OC1

* "SNAPTROL"

(1) Cut shaft to duplicate original.

RESISTORS (Power and Special)

ITEM No.	RATING	REPLACEMENT DATA	
		WORKMAN PART No.	MFGR. PART No.
R417	1.5 ohms 1/2W	WS1.5 ohms	
R418	1.5 ohms 1/2W	WS1.5 ohms	
R419	1.5K, 5%, 7W WW	10W-SQ1.5K	

ITEM No.	RATING	REPLACEMENT DATA	
		WORKMAN PART No.	MFGR. PART No.
R420	2.7K, 5%, 15W, WW	20W-SQ2.75K	
R808	1.5 ohms, 5W, WW		

COILS (RF-IF)

ITEM No.	USE	REPLACEMENT DATA			
		PART No.	MEISSNER PART No.	MILLER PART No.	WORKMAN PART No.
L100	RF Choke (15uh)	A-0095-7	19-2018	4624	T862
L101	RF Choke (2.7uh)	A-0095-6		74F276AP	T814
L102	Peaking (1.5mh)	A-0095-8	19-2034	4664	T875
L103	1st Mixer	A-0239			
L104	Peaking (2.2mh)	A-0095-5		4666	T876
L104A	RF Choke (5.6uh)	A-0095-3	19-1008	74F566AP	T820
L105	Rec. Osc. (17uh)	A-0109			
L106	Peaking (1.5mh)	A-0095-8	19-2034	4664	T875
L200	Gain Mult.	A-0261			
L300	BFO	A-0315			
L400	Peaking (1.5mh)	A-0095-8	19-2034	4664	T875
L500	RF Choke (15uh)	A-0095-7	19-2018	4624	T862
L600	RF Choke (5.6uh)	A-0095-3	19-1008	74F566AP	T820
L601	Peaking (1.5mh)	A-0095-8	19-2034	4664	T875
L602	Carrier Osc.	A-0344-126			
L700	Driver	A-0257			
L701	Neutralization	A-0052			
L702	Final Amp (9 turns)	A-0127-1			
L703	RF Filter (14 turns)	A-0126			
L704	RF Choke (5.6uh)	A-0095-3	19-1008	74F566AP	T820
L705	RF Choke (.22uh)	A-0095-10	19-2003	4584	T957
L800	RF Choke (5.6uh)	A-0095-3	19-1008	74F566AP	T820
T100	Ant. Matching	A-0237			
T101	RF Amp	A-0313-123			
T200	Interstage IF	A-0241			
T201	Output IF	A-0241			
T600	Bal. Mod.	A-0284-123			
T700	Mixer	A-0313-123			
T701	Buffer	A-0259			
T702	Final Grid	A-0237			

TRANSFORMER (Power)

ITEM No.	RATING		REPLACEMENT DATA				NOTES
	PRI.	SEC. 1	MFGR. PART No.	STANCOR PART No.	THORDARSON PART No.	TRIAD PART No.	
T800	120VAC @ 800ma	360VAC @ 60ma	B-0340-126				
	SEC. 2	SEC. 3					
	33VAC @ 600ma	8VAC, Tapped at 6.3VAC, @ 1500ma					

TRANSFORMER (Driver)

ITEM No.	TURNS RATIO			REPLACEMENT DATA				NOTES
	PRI.	SEC. 1	SEC. 2	MFGR. PART No.	STANCOR PART No.	THORDARSON PART No.	TRIAD Part No.	
T400	1	1.1CT		A-0265				

TRANSFORMER (Audio Output)

ITEM No.	IMPEDANCE			REPLACEMENT DATA				NOTES
	PRI.	SEC. 1	SEC. 2	MFGR. PART No.	STANCOR PART No.	THORDARSON PART No.	TRIAD PART No.	
T401	36CT	4	DC Resistance 115	B-0341-126				

SPEAKER

ITEM No.	TYPE	REPLACEMENT DATA		NOTES
		MFGR. PART No.	QUAM PART No.	
SP1	4" x 6" Oval, 3.2 ohms	A-0182	46C3	

FUSE DEVICES

ITEM No.	DESCRIPTION	REPLACEMENT DATA						
		PART No.		BUSS PART No.		LITTELFUSE PART No.		WORKMAN PART No.
		DEVICE	HOLDER	DEVICE	HOLDER	DEVICE	HOLDER	DEVICE
F1	2A, Slo-Blo			MOL2	HKP	313002	342001	
F2	2A, Quick-Acting			AGC2	4406	312002	350218	FG2-2

MISCELLANEOUS

ITEM No.	PART NAME	PART No.	NOTES
FL1	Mechanical Filter	A-0186	455kHz
FL2	Crystal Filter	A-0318	6.255MHz
K1	Relay	A-0285-1	Coil Resistance 185 ohms
M1	Meter	A-0297-123	
S3	Switch	B-0320	Channel Selector
S4	Switch	A-0319	Spot
S5	Switch	A-0292-123	Meter
S6	Switch	A-0247-123	Mode
X1	Crystal	A-0223-122(1)	20.710MHz; Channel 1
X2	Crystal	A-0223-122(1)	20.720MHz; Channel 2
X3	Crystal	A-0223-122(1)	20.730MHz; Channel 3
X4	Crystal	A-0223-122(1)	20.750MHz; Channel 4
X5	Crystal	A-0223-122(1)	20.760MHz; Channel 5
X6	Crystal	A-0223-122(1)	20.770MHz; Channel 6
X7	Crystal	A-0223-122(1)	20.780MHz; Channel 7
X8	Crystal	A-0223-122(1)	20.800MHz; Channel 8
X9	Crystal	A-0223-122(1)	20.810MHz; Channel 9
X10	Crystal	A-0223-122(1)	20.820MHz; Channel 10
X11	Crystal	A-0223-122(1)	20.830MHz; Channel 11
X12	Crystal	A-0223-122(1)	20.850MHz; Channel 12
X13	Crystal	A-0223-122(1)	20.860MHz; Channel 13
X14	Crystal	A-0223-122(1)	20.870MHz; Channel 14
X15	Crystal	A-0223-122(1)	20.880MHz; Channel 15
X16	Crystal	A-0223-122(1)	20.900MHz; Channel 16
X17	Crystal	A-0223-122(1)	20.910MHz; Channel 17
X18	Crystal	A-0223-122(1)	20.920MHz; Channel 18
X19	Crystal	A-0223-122(1)	20.930MHz; Channel 19
X20	Crystal	A-0223-122(1)	20.950MHz; Channel 20
X21	Crystal	A-0223-122(1)	20.960MHz; Channel 21
X22	Crystal	A-0223-122(1)	20.970MHz; Channel 22
X23	Crystal	A-0223-122(1)	21.000MHz; Channel 23
X24	Crystal	A-0312	31.500MHz; Rec. Osc.
X25	Crystal	A-0195-3	6.2565MHz; Carrier Osc, LSB
X26	Crystal	A-0195-2	6.2535MHz; Carrier Osc, USB
X27	Crystal	A-0195-123	6.255MHz; Carrier Osc. AM

(1) Specify Channel Number and Frequency.

ACCESSORIES

ITEM	MFGR. PART No.	REMARKS
Microphone, Element	0-104	
Microphone Stand	Type G	

NOTE

ONLY THOSE PERSONS PROPERLY LICENSED ARE PERMITTED TO MAKE REPAIRS OR ADJUSTMENTS WHICH MAY RESULT IN ILLEGAL OPERATION. (REFER TO FCC RULES AND REGULATIONS PART 95, SUBPARTS C & D.)

The frequency of the transmitter should be checked periodically with a secondary frequency standard to insure proper and legal operation.

Best results will be obtained when adjusting the final RF output circuit if the antenna normally used is connected and the chassis is as nearly in the cabinet as possible.

Connect either 50-ohm dummy load or the normally used antenna system.

MODEL Lynx 23

ALIGNMENT INSTRUCTIONS

Suggested Alignment Tools: GC ELECTRONICS

L1, L4, L11, L12 ..... 9089, 8728
L5 thru L10, T1, T2 9440
T3, T4, T5 ..... 5000, 8290

RECEIVER

Connect an AC VTVM across speaker voice coil. Set Squelch control fully counterclockwise, RECEIV-O-SLIDE to center position. Adjust Volume control for suitable reading.

SIGNAL GENERATOR	CHANNEL	ADJUST	REMARKS
Connect high side thru .01mfd to base of TR4 (2nd Mixer), low side to ground. Set to 455kHz (Mod.).	Any	T5, T4, T3	Adjust for maximum.
Connect high side thru .01mfd to antenna connector, low side to chassis. Set to 27.085MHz (Mod.).	11	T2, T1 L6, L5, L7, VR3	Adjust for maximum.
As above. Set output level to desired maximum squelch limit.	11	VR5	Set Squelch control fully clockwise. Adjust until squelch just opens.
As above. Set output level to 150uV.	11	VR2	Set Meter switch to S/RF position. Adjust for reading of 9.

HOWARD W. SAMS & CO., INC. Indianapolis, Indiana 46206

TRANSMITTER

INDICATOR	ADJUST	REMARKS
Connect an RF wattmeter between antenna connector and dummy load.	L8, L9, L10,L11 L12,L4	Key transmitter, Adjust L8, L9, and L10 for approximately equal output on all channels. Adjust L11, L12, and L4 for maximum.
As above. Remove metering jumper from TP (in collector circuit of final amp, TR18) and connect a 0-500ma DC ammeter between terminals.	L4	Adjust for 5 watts input.
RF wattmeter, as above.	VR1	Set meter switch to S/RF position. Adjust for meter reading in agreement with RF output indication.
Connect a modulation monitor across dummy load. Connect an audio signal generator to microphone connector, high side to pin 1, low side to pin 2 (ground) Set to 1kHz.	VR9	Set meter switch to Mod position. Adjust signal generator output and Mike Gain control for 100% modulation. Adjust for meter reading at 100%.
TV (Ch. 2)	L1	Adjust for MINIMUM interference.

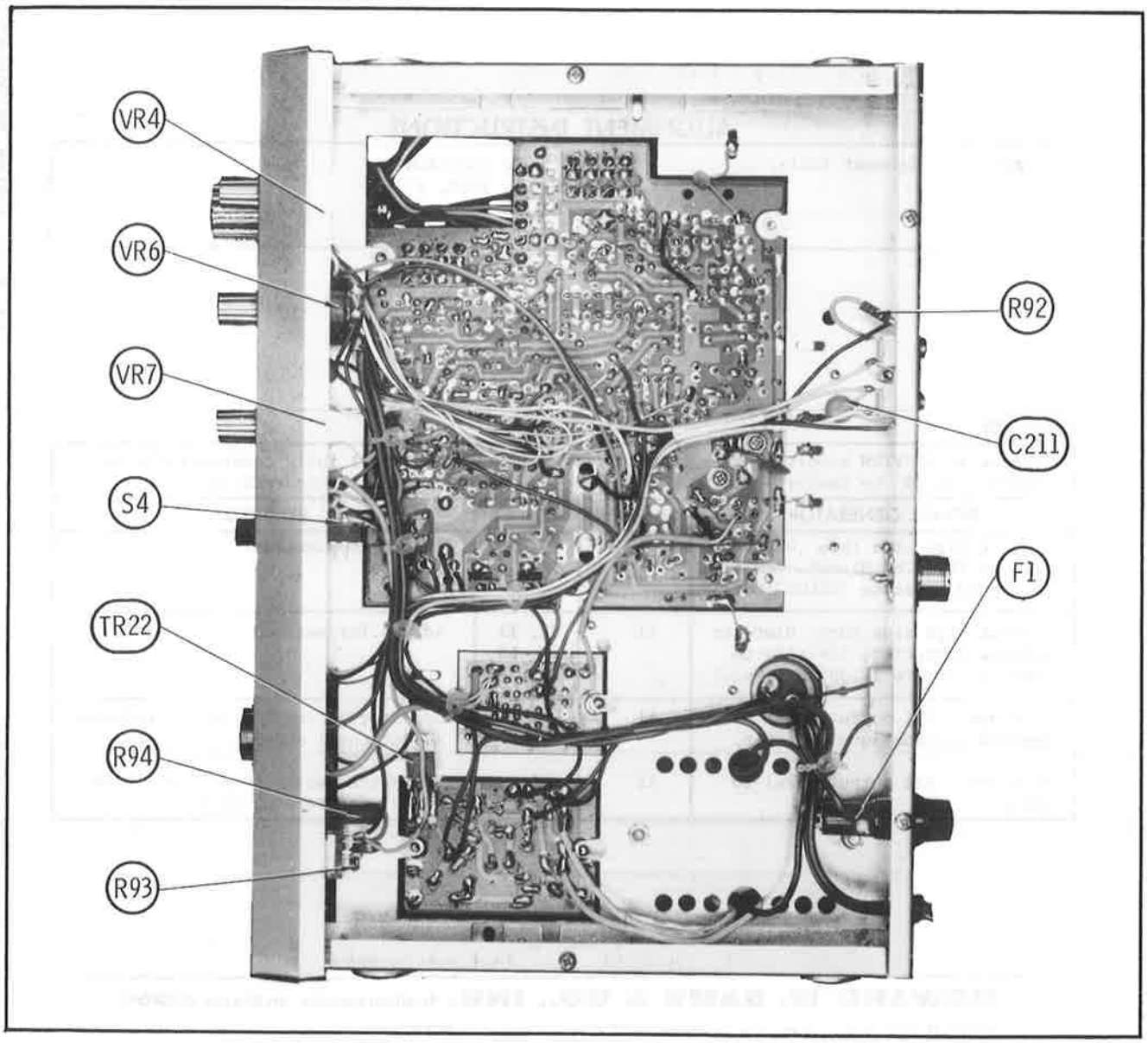

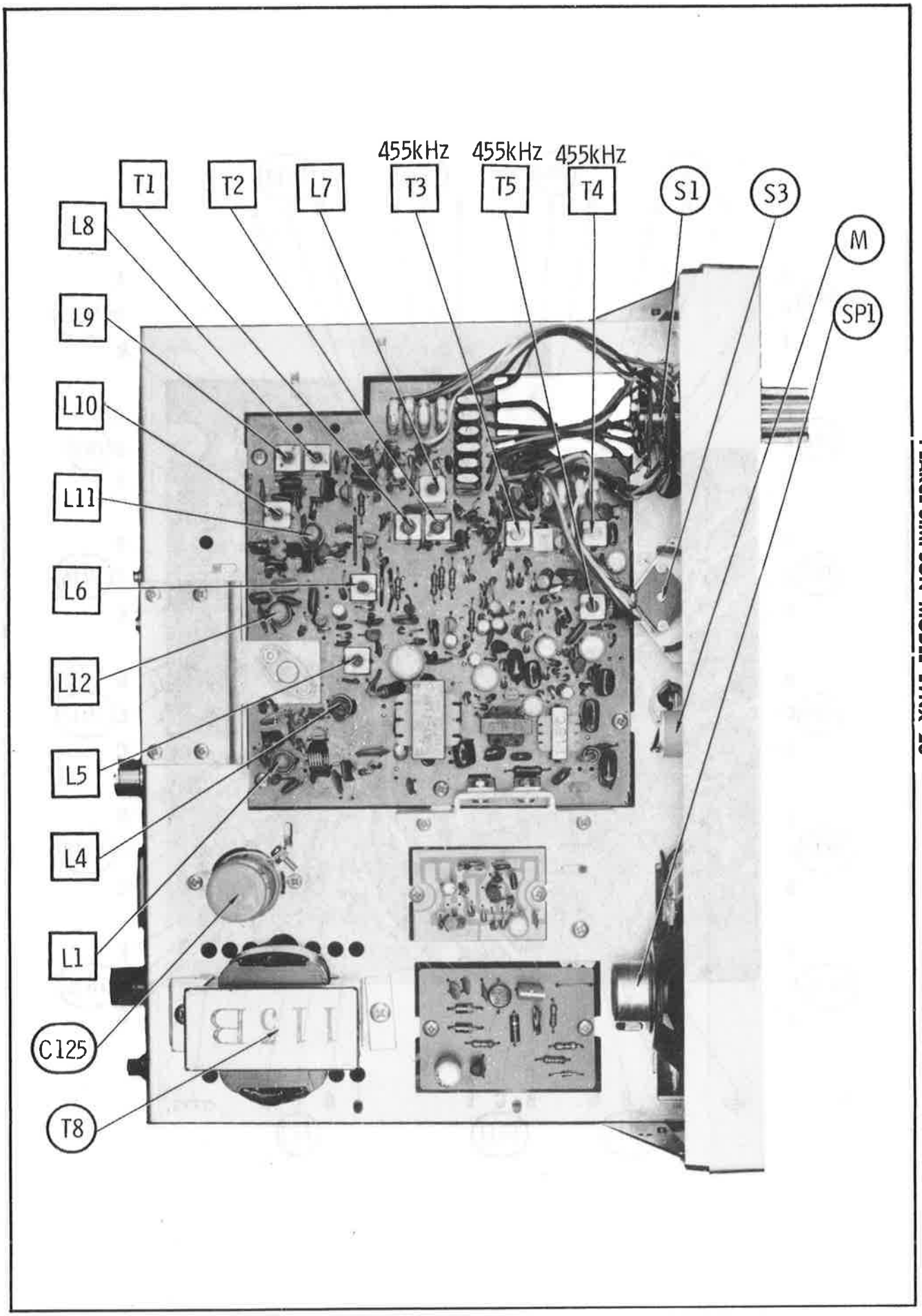
455kHz
455kHz
455kHz
T1
T2
L7
T3
T5
T4
S1
S3
M
SP1
L8
L9
L10
L11
L6
L12
L5
L4
L1
C125
T8

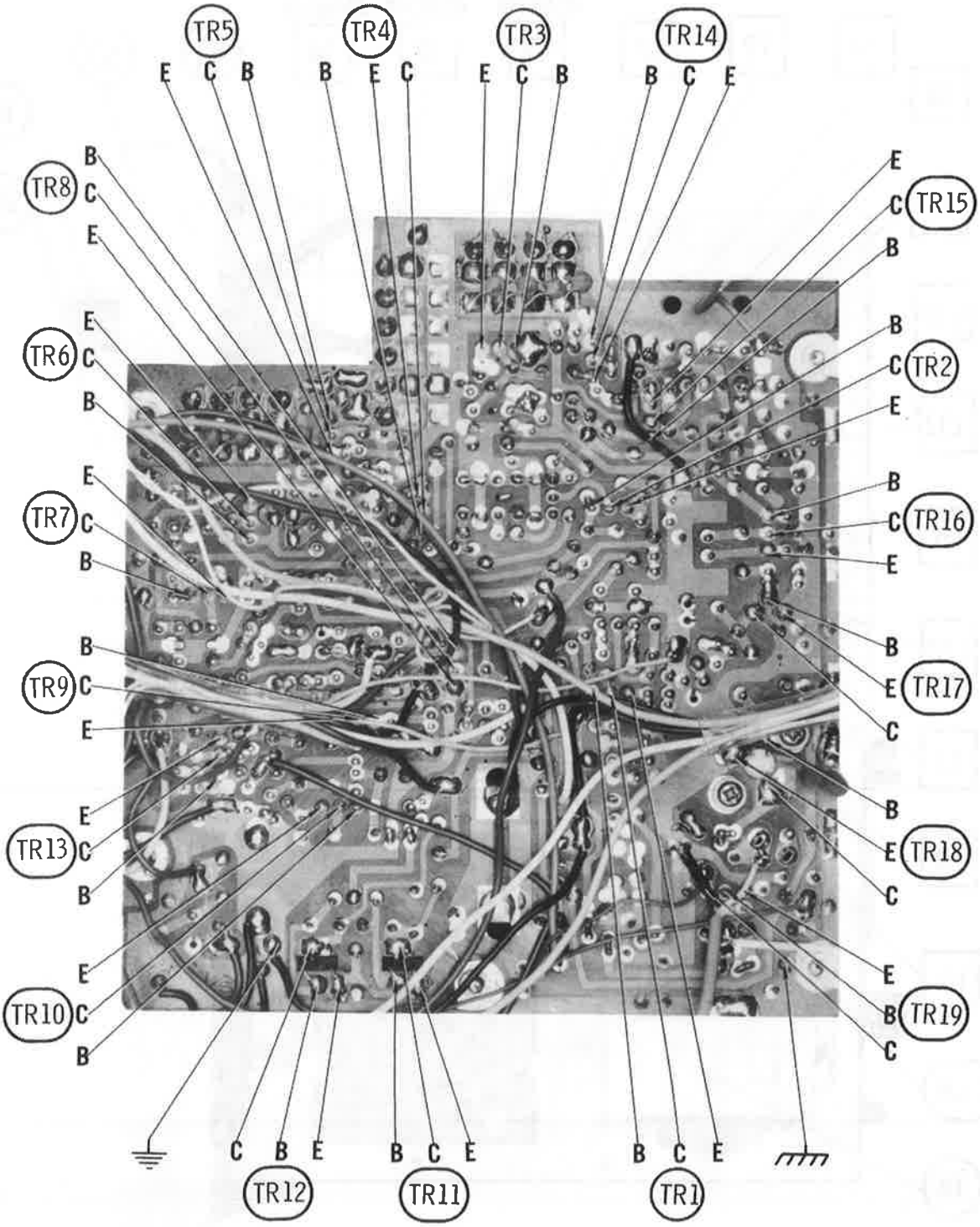
TR5
E C B
TR4
B E C
TR3
E C B
TR14
B C E
TR8
B C E
TR6
E C B
TR7
E C B
TR9
B C E
TR13
E C B
TR10
E C B
TR15
E C B
TR2
B C E
TR16
B C E
TR17
B E C
TR18
B E C
TR19
E B C
TR12
C B E
TR11
B C E
TR1
B C E

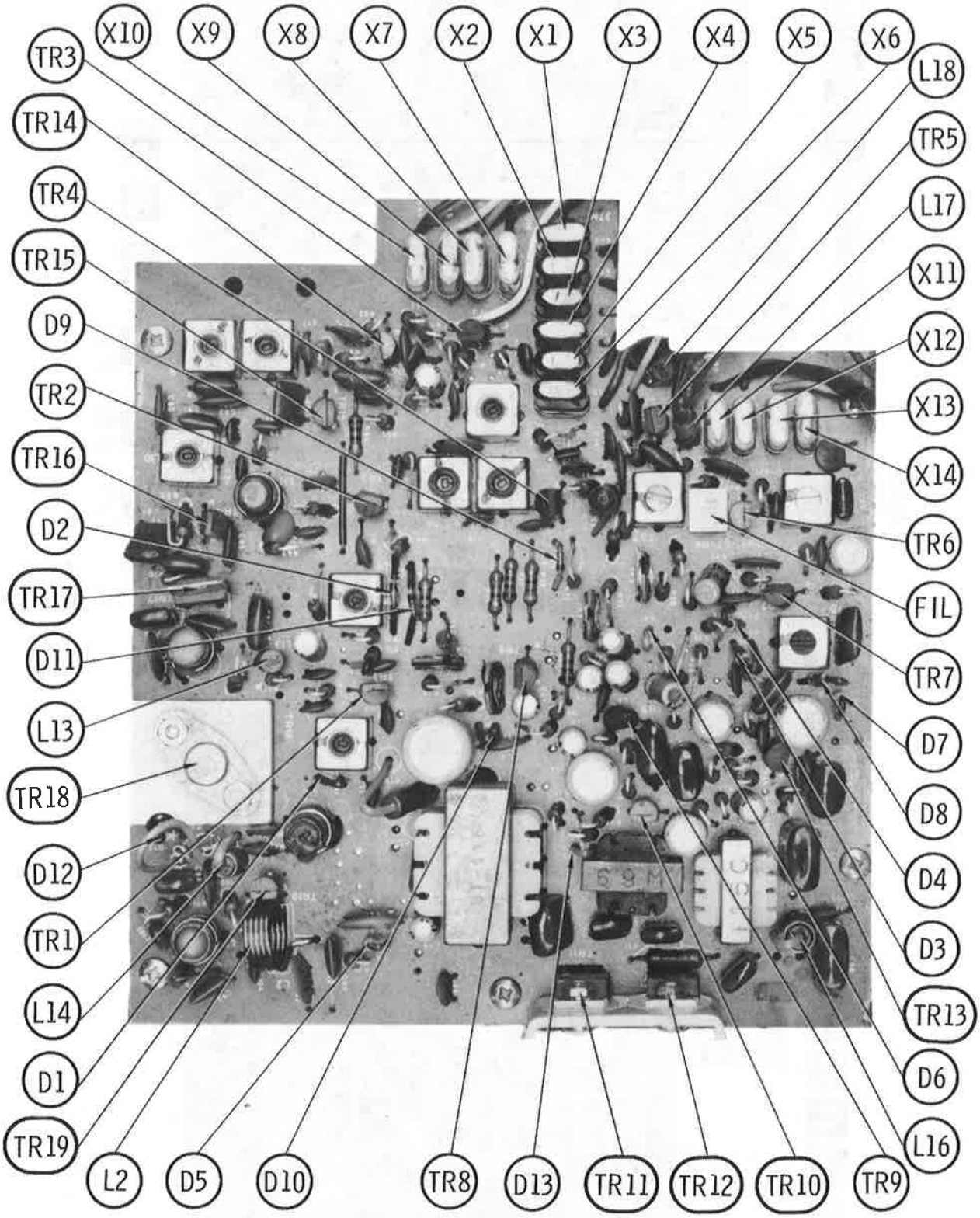
X10
X9
X8
X7
X2
X1
X3
X4
X5
X6
TR3
TR14
TR4
TR15
D9
TR2
TR16
D2
TR17
D11
L13
TR18
D12
TR1
L14
D1
TR19
L2
D5
D10
TR8
D13
TR11
TR12
TR10
TR9
L18
TR5
L17
X11
X12
X13
X14
TR6
FIL
TR7
D7
D8
D4
D3
TR13
D6
L16

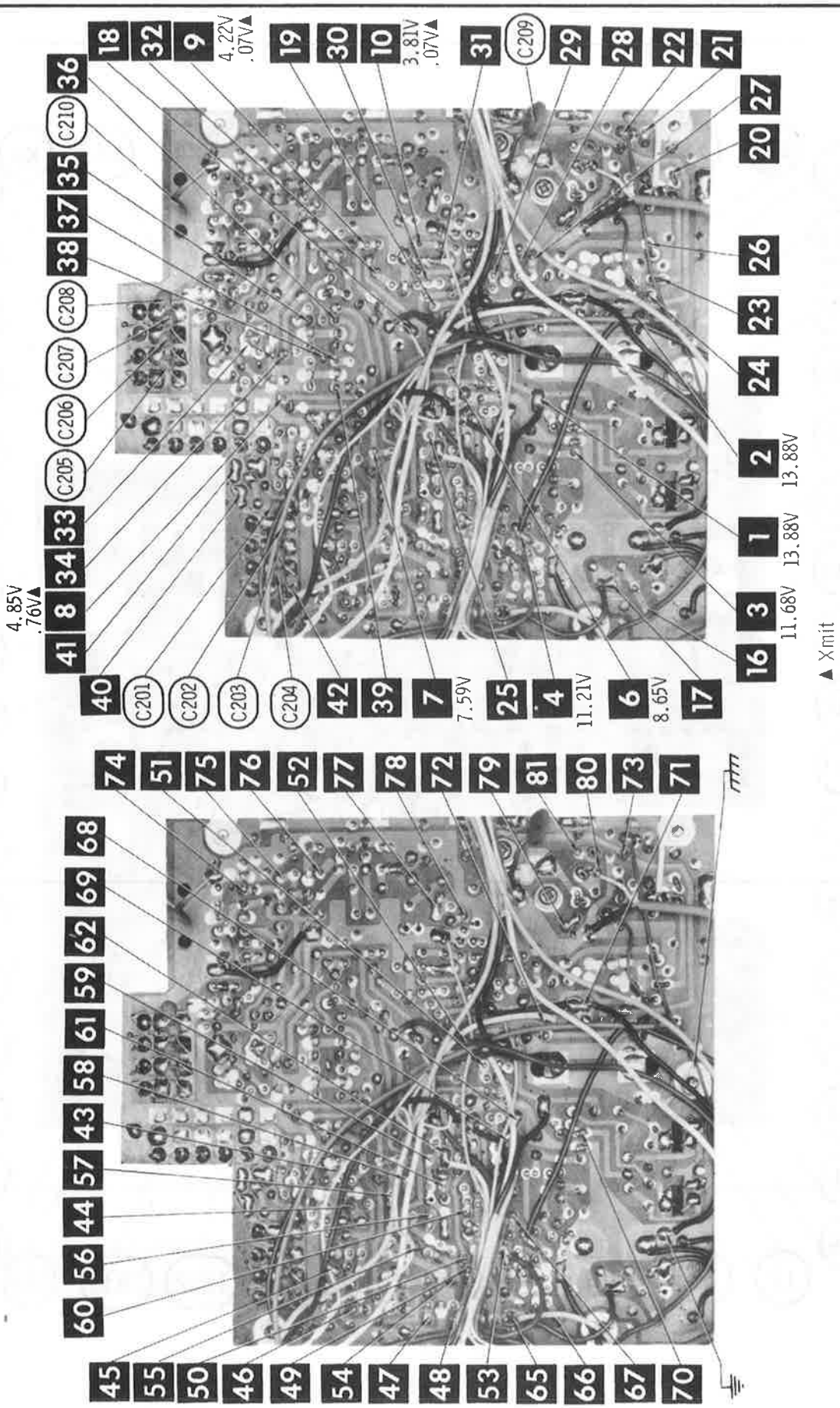

A Howard W. Sams CIRCUITRACE Photo

C25
C26
C23
C28
C30
C29
C34
C31
C33
C27
C32
C60
C36
C35
C107
C24
C12
C15
C16
C75
C72
C74
C73
C71
C77
C10
C79
C22
C44
C52
C20
C19
C18
C11
C17
C9
C2
C78
C83
C81
C80
C82
C84
C87
C85
C88
C90
C91
C89
C106
C94

C50
C49
C54
C41
C51
C38
C40
C105
C61
C92
C63
C67
C55
C68
C48
C43
C112
C46
C47
C45
C70
C4
C3
C76
C64
C69
C53
C57
C56
C58
C100
C99
C102
C8
C7
C5
C1
C59
C37
C97
C109
C103
C96
C95
C101
C93
C104

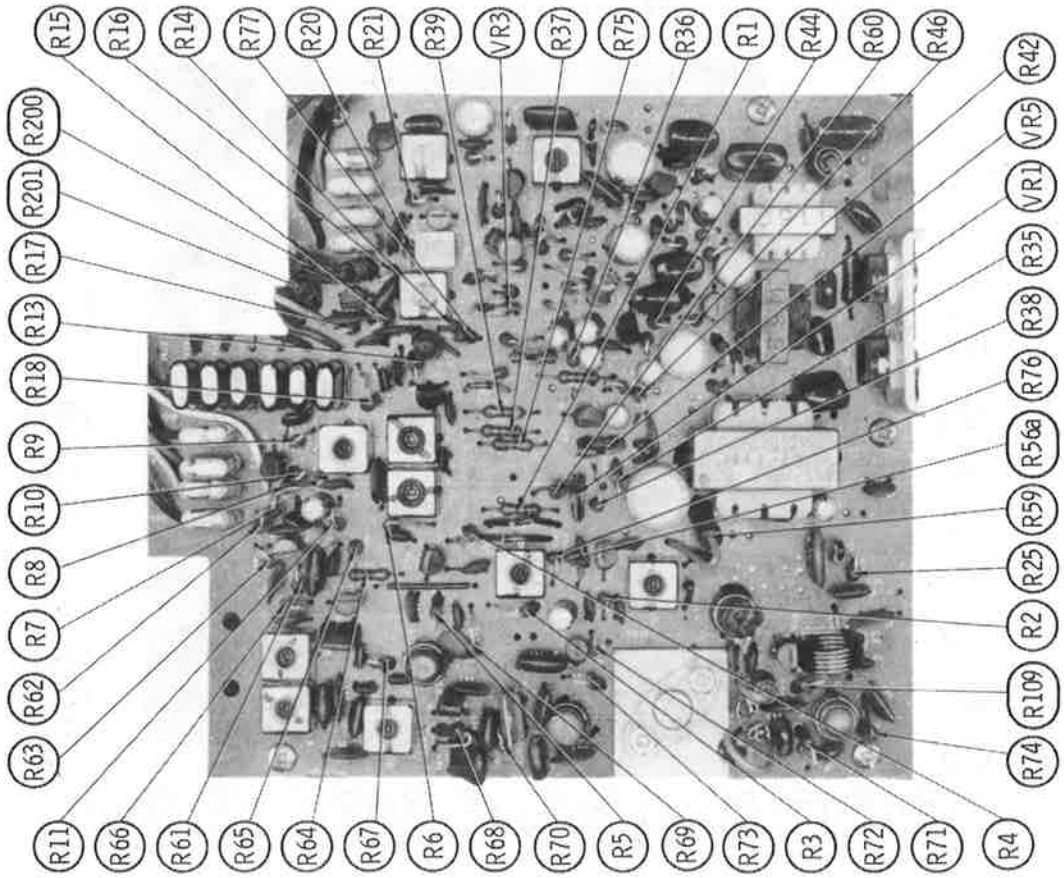
R15
R16
R14
R77
R20
R21
R39
VR3
R37
R75
R36
R1
R44
R60
R46
R42
VR5
VR1
R35
R38
R76
R56a
R59
R25
R2
R109
R74
R200
R201
R17
R13
R18
R9
R10
R8
R7
R62
R63
R11
R66
R61
R65
R64
R67
R6
R68
R70
R5
R69
R73
R3
R72
R71
R4

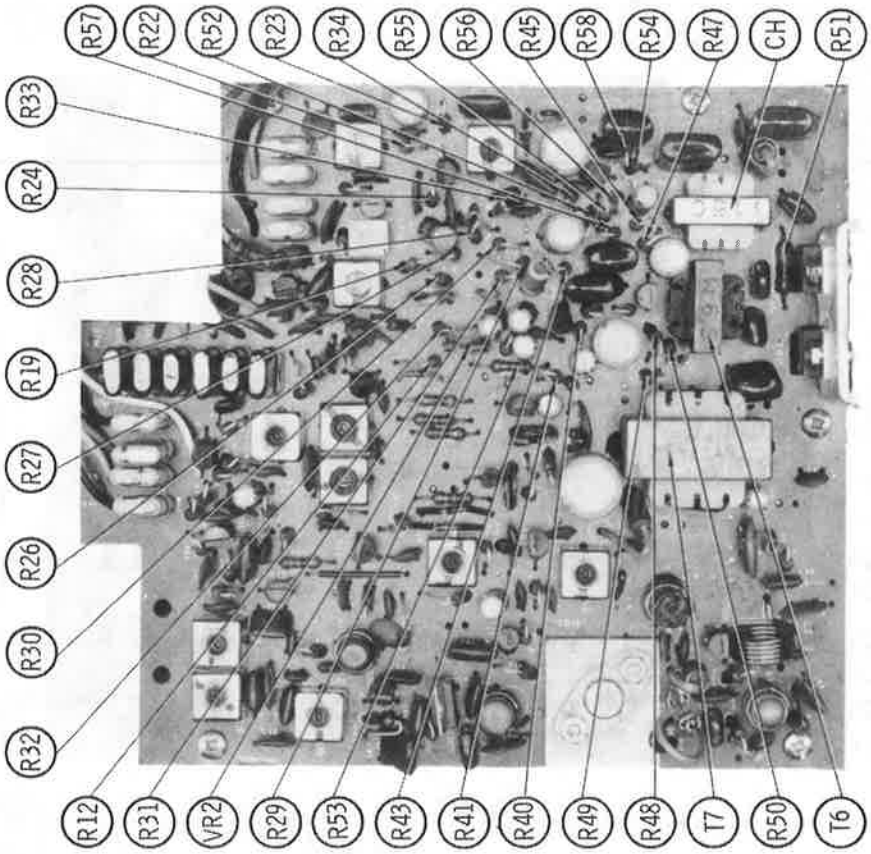
R57
R22
R52
R23
R34
R55
R56
R45
R58
R54
R47
CH
R51
R33
R24
R28
R19
R27
R26
R30
R32
R12
R31
VR2
R29
R53
R43
R41
R40
R49
R48
T7
R50
T6

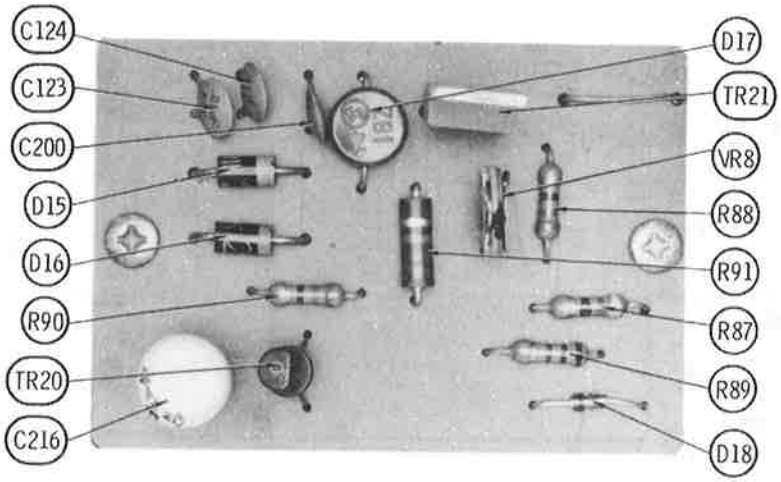

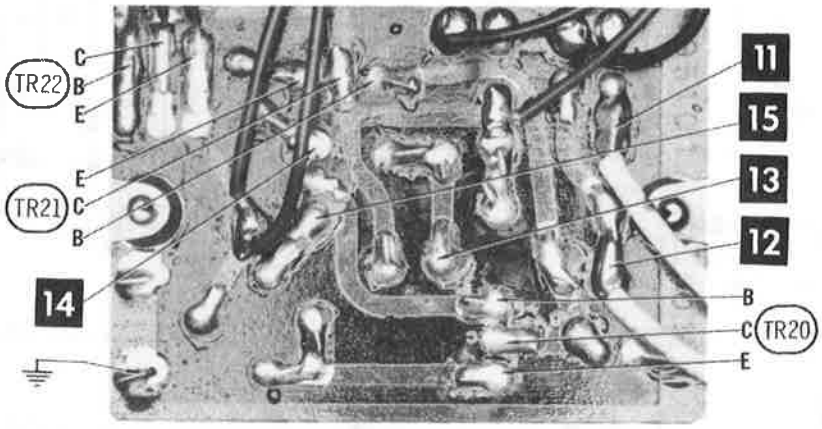

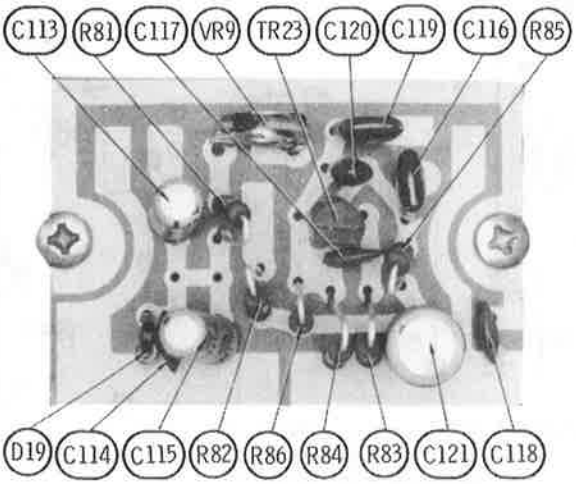

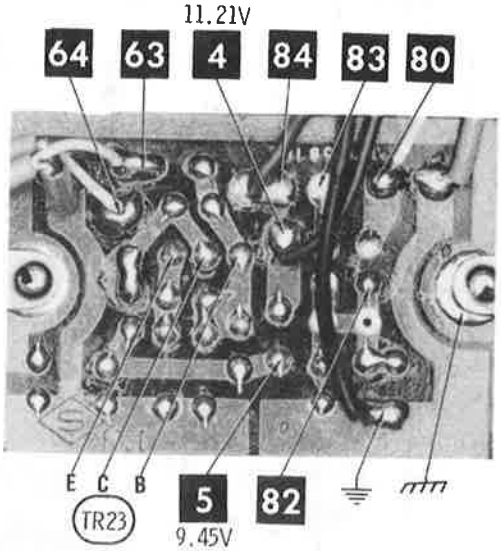

A Howard W. Sams CIRCUITRACE Photo

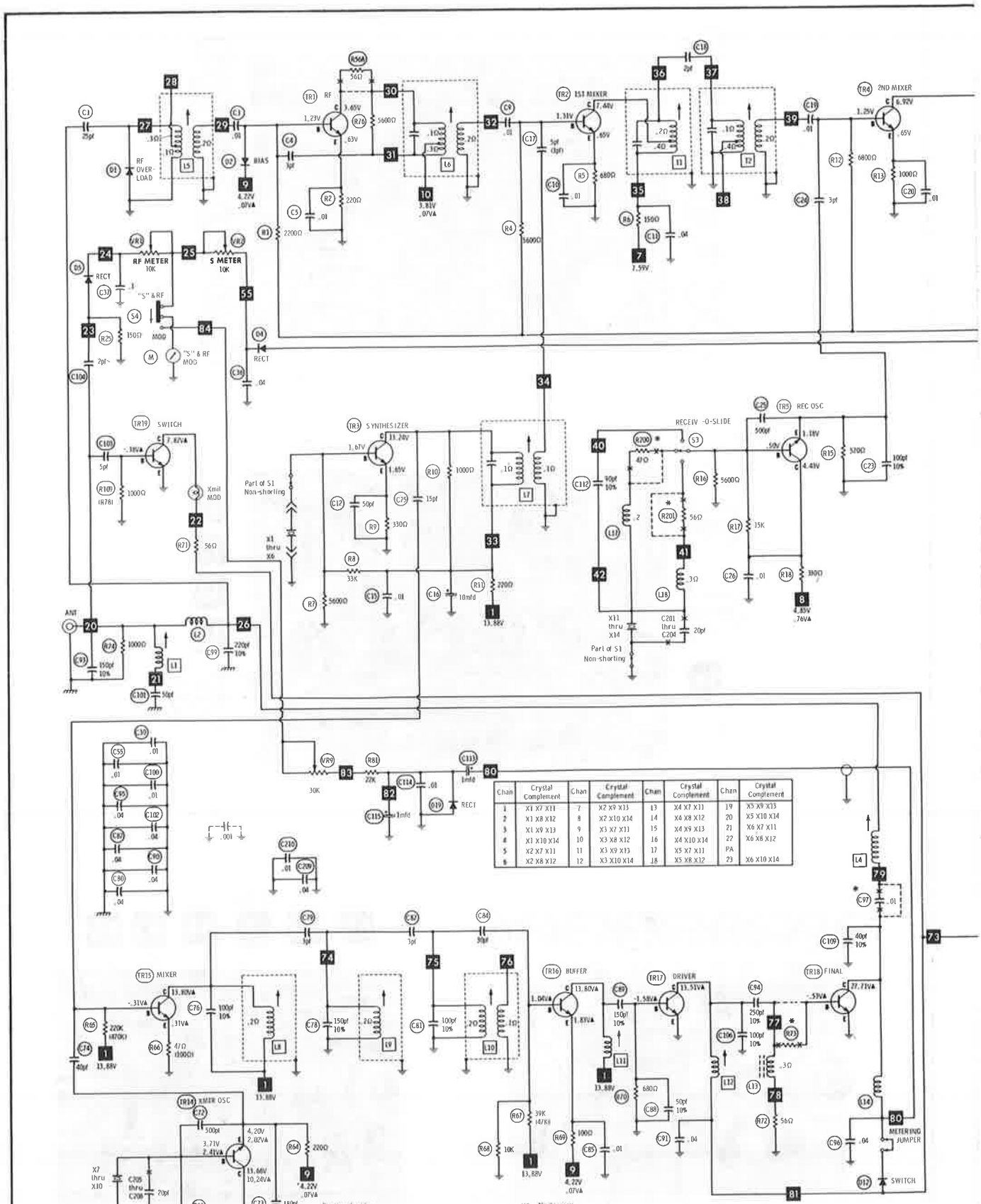

Chan	Crystal Complement	Chan	Crystal Complement	Chan	Crystal Complement	Chan	Crystal Complement
1	X1 X7 X11	7	X2 X9 X13	13	X4 X7 X11	19	X5 X9 X13
2	X1 X8 X12	8	X2 X10 X14	14	X4 X8 X12	20	X5 X10 X14
3	X1 X9 X13	9	X3 X7 X11	15	X4 X9 X13	21	X6 X7 X11
4	X1 X10 X14	10	X3 X8 X12	16	X4 X10 X14	22	X6 X8 X12
5	X2 X7 X11	11	X3 X9 X13	17	X5 X7 X11	PA	
6	X2 X8 X12	12	X3 X10 X14	18	X5 X8 X12	23	X6 X10 X14

Denotes chassis.
Denotes ground. (Voltage reference unless otherwise indicated)
Indicates connection used in some versions.
Indicates connection not used in some versions.
Omitted in some versions.
See parts list.
Value varies; replace with original value.
Measured in transmit position.
Measured with unit squelched.

NC No Connection.
Measurements taken with switching in position shown unless otherwise indicated.
Values shown in ( ) are used in some applications.
Resistors are 1/2W or less, 10% or 20%, unless otherwise indicated.
Supply voltage maintained at rated value for measurements.
Voltage and resistance measured with VTVM or equivalent meter, no signal applied and controls adjusted for normal operation.
Arrow on control indicates direction of advance.
Numbers assigned to terminals may not be found on the unit.
Transistor resistances vary widely; no resistance measurements taken.
Resistors are 1/2W or less, 5%, unless otherwise indicated.

A PHOTOFACT STANDARD NOTATION SCHEMATIC with CIRCUITRACE

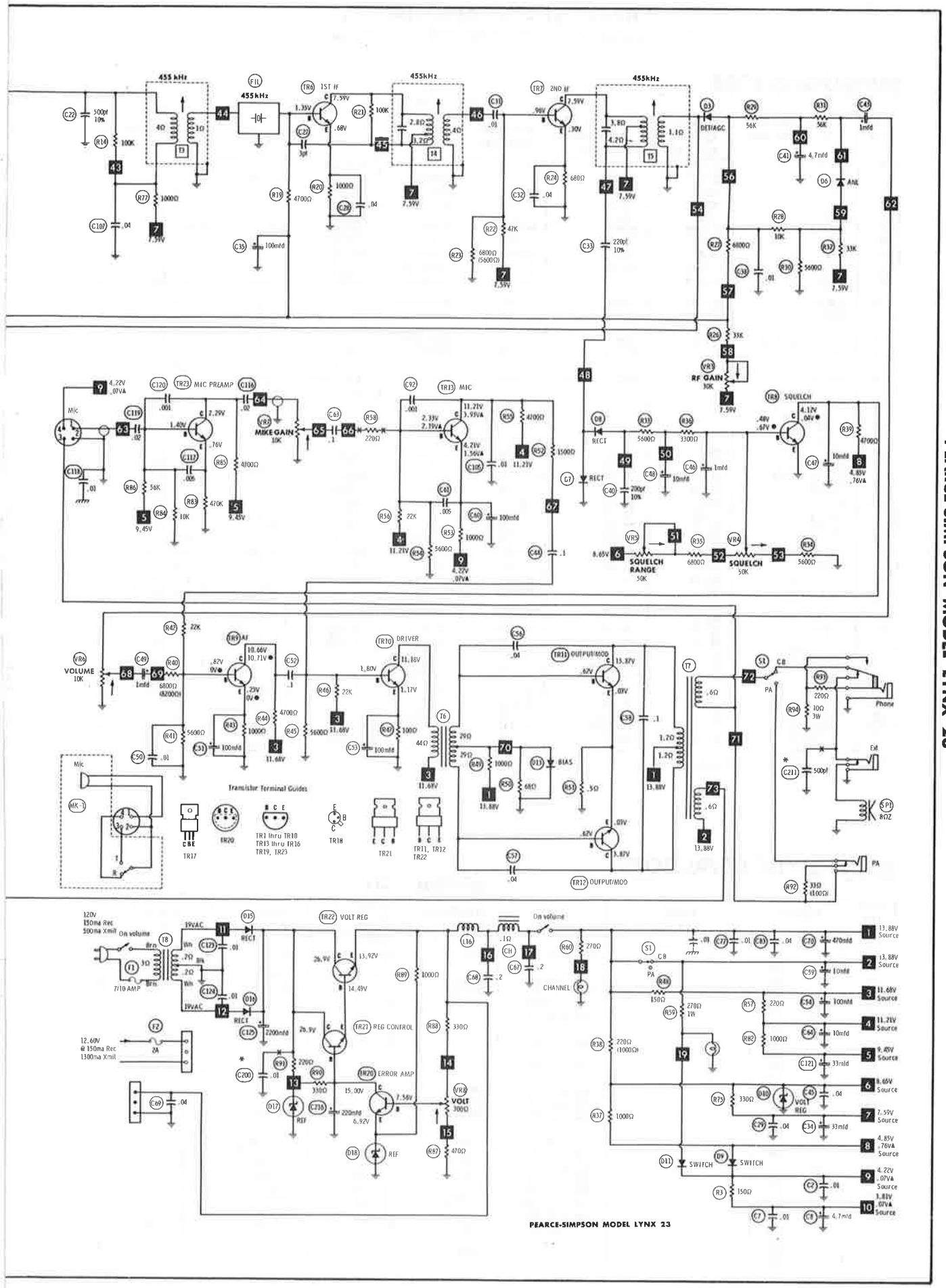

PEARCE-SIMPSON MODEL LYNX 23

PARTS LIST AND DESCRIPTION

(When ordering parts, state Model, Part Number, and Description.)

SEMICONDUCTORS

ITEM No.	TYPE / MFGR. No./PART No.	REPLACEMENT DATA						
		GENERAL ELECTRIC PART No.	INTERNATIONAL RECTIFIER PART No.	MALLORY PART No.	MOTOROLA PART No.	RCA PART No.	SPRAGUE PART No.	SYLVANIA PART No.
D1	WG1012	GE-300	D200	PTC214	HEPR0600	SK3100	RT218	ECG 177
D2	WG1012	GE-300	D200	PTC214	HEPR0600	SK3100	RT218	ECG 177
D3	1N60	1N60	1N60	PTC206	HEP135	SK3088		ECG 109
D4	1N60	1N60	1N60	PTC206	HEP135	SK3088		ECG 109
D5	1N60	1N60	1N60	PTC206	HEP135	SK3088		ECG 109
D6	1S2473	GE-300	D200	PTC214	HEPR0600	SK3100	RT218	ECG 177
D7	1N60	1N60	1N60	PTC206	HEP135	SK3088		ECG 109
D8	1N60	1N60	1N60	PTC206	HEP135	SK3088		ECG 109
D9	WH1012	GE-300	D200	PTC214	HEPR0600	SK3100	RT218	ECG 177
D10	WZ090 (ZW9.1) 8.65V Zener	GEZD-9.1		PTC505	HEPZ0412	SK3060	RT240	ECG 139
D11	WG1012	GE-300	D200	PTC214	HEPR0600	SK3100	RT218	ECG 177
D12	SR1K-1	GE-504A	8D4 or 5A4D	PTC201 or PTC202	HEPR0052	SK3030 or SK3031	RT213 or RT214	ECG 116 or ECG 117
D13	KB102 (KB162)	GE-300	D200	PTC214	HEPR0600	SK3100	RT218	ECG 177
D15	SR1K-2	GE-504A	8D6 or 5A6D	PTC202	HEPR0054	SK3017A or SK3032	RT210 or RT215	ECG 116 or ECG 117
D16	SR1K-2	GE-504A	8D6 or 5A6D	PTC202	HEPR0054	SK3017A or SK3032	RT210 or RT215	ECG 116 or ECG 117
D17	ZB1-15 15.20V Zener	GEZD-15	Z-1214	PTC509	HEPZ0418	SK3063	RT245	ECG 145
D18	WZ071 6.92V Zener		Z-1206	ZB6.8	HEPZ0409		RT238	ECG 5071
D19	1N60	1N60	1N60	PTC206	HEP135	SK3088		ECG 109
TR1	2SC710(C)	GE-10	TR-24	PTC126	HEP723	SK3018	RT107	ECG 107
TR2	2SC710(C)(D)	GE-10	TR-24	PTC126	HEP723	SK3018	RT107	ECG 107
TR3	2SC710(C)	GE-10	TR-24	PTC126	HEP723	SK3018	RT107	ECG 107
TR4	2SC710(C)(D)	GE-10	TR-24	PTC126	HEP723	SK3018	RT107	ECG 107
TR5	2SC710(C)	GE-10	TR-24	PTC126	HEP723	SK3018	RT107	ECG 107
TR6	2SC710(C)	GE-10	TR-24	PTC126	HEP723	SK3018	RT107	ECG 107
TR7	2SC710(C)	GE-10	TR-24	PTC126	HEP723	SK3018	RT107	ECG 107
TR8	2SC711(E)	GE-62	TR-21	PTC123	HEP721	SK3122	RT105	ECG 123A
TR9	2SC711(D)	GE-62	TR-21	PTC123	HEP721	SK3122	RT105	ECG 123A
TR10	2SC619(C)	GE-20	TR-24	PTC125	HEP736	SK3020	RT102	ECG 123
TR11	2SC1173(Y)	GE-28 (7)		PTC110 (7)	HEPS3023(7)	SK3054 (7)	RT154 (7)	ECG 152 (7)
TR12	2SC1173(Y)							
TR13	2SC711(D)	GE-62	TR-21	PTC123	HEP721	SK3122	RT105	ECG 123A
TR14	2SC710(C)	GE-10	TR-24	PTC126	HEP723	SK3018	RT107	ECG 107
TR15	2SC710(C)	GE-10	TR-24	PTC126	HEP723	SK3018	RT107	ECG 107
TR16	2SC620(C)	GE-20	TR-24	PTC125	HEP736	SK3020	RT102	ECG 123
TR17	2SC1018	GE-28	IRTR-65	PTC110	HEPS3020	SK3047		ECG 188
TR18	2SC756		IRTR-65		HEPS3001	SK3048		ECG 195
TR19	2SC711(E)	GE-62	TR-21	PTC123	HEP721	SK3122	RT105	ECG 123A
TR20	2SC372(O)	GE-20	TR-24	PTC139	HEP724	SK3038	RT102	ECG 123A
TR21	2SC1173(O)	GE-28	IRTR-55	PTC110	HEPS3023	SK3054	RT154	ECG 152
TR22	2SD235(O)	GE-28	IRTR-92	PTC110	HEPS3023	SK3054	RT154	ECG 152
TR23	2SC711(D)	GE-62	TR-21	PTC123	HEP721	SK3122	RT105	ECG 123A

(7) Two required -- select matched pair.

ELECTROLYTIC CAPACITORS

ITEM No.	RATING		REPLACEMENT DATA					
			MFGR. PART No.	ARCO PART No.	CENTRALAB PART No.	CORNELL-DUBILIER PART No.	MALLORY PART No.	SPRAGUE PART No.
C8	4.7	25V		RME-A-G-005	EP30-5	PC5-50	VTT4R7A50	EV-1319
	4.7	16V						
C16	10	16V		RME-B-E-010	EP15-10	PC10-25	VTT10A25	EV-1222
C34	33	16V		ME-3-E-035	EP15-25	PC30-25	MTV30CB25	EV-1325
C35	10	16V		RME-B-E-010	EP15-10	PC10-25	VTT10A25	EV-1222
C41	4.7	25V		RME-A-G-005	EP30-5	PC5-50	VTT4R7A50	EV-1319
	4.7	16V						
C43	1	50V		RME-A-J-001	EP50-2	PC1-50	MTV1CB50	EV-1615
	1	16V						
C46	1	50V		RME-A-J-001	EP50-2	PC1-50	MTV1CB50	EV-1615
	1	16V						
C47	10	16V		RME-B-E-010	EP15-10	PC10-25	VTT10A25	EV-1222
C48	10	16V		RME-B-E-010	EP15-10	PC10-25	VTT10A25	EV-1222
C49	1	50V		RME-A-J-001	EP50-2	PC1-50	MTV1CB50	EV-1615
	1	16V						
C51	100	10V		RME-E-D-100	EP15-100	PC100-10	MTV100CB10	EV-1130
C53	100	10V		RME-E-D-100	EP15-100	PC100-10	MTV100CB10	EV-1130
C54	100	16V		RME-E-E-100	EP15-100	PC100-16	MTV100CD15	EV-1230
C59	10	16V		RME-B-E-010	EP15-10	PC10-25	VTT10A25	EV-1222
C60	100	16V		RME-E-E-100	EP15-100	PC100-16	MTV100CD15	EV-1230
C64	10	16V		RME-B-E-010	EP15-10	PC10-25	VTT10A25	EV-1222
C70	470	16V		RME-L-E-500	EA15-500	PC500-16	MTV500DN15	EV-1250
C113	1	50V		RME-A-J-001	EP50-2	PC1-50	MTV1CB50	EV-1615
	1	25V						
C115	1	50V		RME-A-J-001	EP50-2	PC1-50	MTV1CB50	EV-1615
	1	25V						

PARTS LIST AND DESCRIPTION (CONTINUED)

(When ordering parts, state Model, Part Number, and Description.)

ELECTROLYTIC CAPACITORS (cont)

ITEM No.	RATING		REPLACEMENT DATA					
			MFGR. PART No.	ARCO PART No.	CENTRALAB PART No.	CORNELL-DUBILIER PART No.	MALLORY PART No.	SPRAGUE PART No.
C121	33	16V		ME-3-E-035	EP15-25	PC30-25	MTV30CB25	EV-1325
C125	2200	25V		ME-G2000		WBR2000-25	TC2520A	TVA-1213.5
C216	220	16V		RME-J-E-250	EA15-250	PC250-25	MTV250DE15	EV-1245

CAPACITORS

ITEM No.	RATING			MFGR. PART No.	REPLACEMENT DATA				
					ARCO/ELMENCO PART No.	CENTRALAB PART No.	CORNELL-DUBILIER PART No.	MALLORY PART No.	SPRAGUE PART No.
C1	25	50V			DM-15-240J	CPR-24J		SX424	MS425
C2	.01				CCD-103	CK-103	MGP01	TA110	TG-S10
C3	.01				CCD-103	CK-103	MGP01	TA110	TG-S10
C4	3	50V							
C5	.01				CCD-103	CK-103	MGP01	TA110	TG-S10
C7	.01				CCD-103	CK-103	MGP01	TA110	TG-S10
C9	.01				CCD-103	CK-103	MGP01	TA110	TG-S10
C10	.01				CCD-103	CK-103	MGP01	TA110	TG-S10
C11	.04					DD-403		GP140	
C12	50				DM-15-500J		CD15ED510J03		424MC51R0J501
C15	.01				CCD-103	CK-103	MGP01	TA110	TG-S10
C17	5	50V			DM-15-050D		CD15CD050D03	SX550	
C18	2	50V							
C19	.01				CCD-103	CK-103	MGP01	TA110	TG-S10
C20	.01				CCD-103	CK-103	MGP01	TA110	TG-S10
C22	500	50V	10%		DM-19-501J	CPR-510J	CD15FD511J03	SX351	424ME5100J501
C23	100	50V	10%		DM-15-101J	CPR-100J	CD15FD101J03	SX310	424MC1000J501
C24	3	50V							
C25	500				CCD-501	DD-501	GP500	GP350	10TS-T50
C26	.01				CCD-103	CK-103	MGP01	TA110	TG-S10
C27	3								
C28	.04					DD-403		GP140	
C29	.04				1PD-1-403			EWF1A139	1PB-S39
C30	.01				CCD-103	CK-103	MGP01	TA110	TG-S10
C31	.01				CCD-103	CK-103	MGP01	TA110	TG-S10
C32	.04					DD-403		GP140	
C33	220	50V	10%		DM-19-221J	CPR-220J	CD15FD221J03	SX322	424ME2200J501
C36	.04					DD-403		GP140	
C37	.1					CK-104		TA010	TG-P10
C38	.01				CCD-103	CK-103	MGP01	TA110	TG-S10
C40	200	50V	10%		DM-19-201J	CPR-200J	CD15FD201J03	SX320	424ME2000J501
C44	.1	16V			1DP-2-104		DPMS2P1	EWF05010	431P1049R5
C45	.04				CCD-103	CK-103	MGP01	TA110	TG-S10
C50	.01				CCD-103	CK-103	MGP01	TA110	TG-S10
C52	.1	16V			1DP-2-104		DPMS2P1	EWF05010	431P1049R5
C55	.01				CCD-103	CK-103	MGP01	TA110	TG-S10
C56	.04	50V			1DP-1-403			EWF1A139	1PB-S39
C57	.04	50V			1DP-1-403			EWF1A139	1PB-S39
C58	.1	16V			1DP-2-104		DPMS2P1	EWF05010	431P1049R5
C61	.005				CCD-502	CK-502	MGP005	TA250	TG-D50
C63	.1	16V			1DP-2-104		DPMS2P1	EWF05010	431P1049R5
C67	.2	50V			1DP-3-204		DPMS2P2	EWF05022	431P2249R5
C68	.2	50V			1DP-3-204		DPMS2P2	EWF05022	431P2249R5
C69	.04	50V			1DP-1-403			EWF1A139	1PB-S39
C71	.01				CCD-103	CK-103	MGP01	TA110	TG-S10
C72	500				CCD-501	DD-501	GP500	GP350	10TS-T50
C73	180	50V	10%		DM-19-181J	CPR-180J	CD15FD181J03	SX318	424ME1800J501
C74	40	50V			DM-15-390J	CPR-39J	CD15ED390J03	SX439	MS-44
C75	15	50V			DM-15-150J			SX415	
C76	100	50V	10%		DM-15-101J	CPR-100J	CD15FD101J03	SX310	424MC1000J501
C77	.01				CCD-103	CK-103	MGP01	TA110	TG-S10
C78	150	50V	10%		DM-15-151J	CPR-150J	CD15FD151J03	SX315	424MC1500J501
C79	3	50V							
C80	.04					DD-403		GP140	
C81	100	50V	10%		DM-15-101J	CPR-100J	CD15FD101J03	SX310	424MC1000J501
C82	3	50V							
C83	.04					DD-403		GP140	
C84	30	50V			DM-15-300J	CPR-30J	CD15ED330J03	SX430	MS-427
C85	.01				CCD-103	CK-103	MGP01	TA110	TG-S10
C87	.04	50V			1DP-1-403			EWF1A139	1PB-S39
C88	50	50V	10%		DM-15-500J		CD15ED510J03		424MC51R0J501
C89	150	50V	10%		DM-15-151J	CPR-150J	CD15FD151J03	SX315	424MC1500J501
C90	.04	50V			1DP-1-403			EWF1A139	1PB-S39
C91	.04					DD-403		GP140	
C92	.001	50V				CPR-1000J		EWF1A210	1PB-D10
C93	150	50V	10%		DM-15-151J	CPR-150J	CD15FD151J03	SX314	424MC1500J501
C94	250	50V	10%		DM-19-251J	CPR-240J	CD15FD241J03	SX324	MS-324
C95	.04	50V			1DP-1-403			EWF1A139	1PB-S39
C96	.04					DD-403		GP140	
C97	.01				CCD-103	CK-103	MGP01	TA110	TG-S10

PARTS LIST AND DESCRIPTION (CONTINUED)

(When ordering parts, state Model, Part Number, and Description.)

CAPACITORS (cont)

ITEM No.	RATING			MFGR. PART No.	REPLACEMENT DATA				
					ARCO/ELMENCO PART No.	CENTRALAB PART No.	CORNELL-DUBILIER PART No.	MALLORY PART No.	SPRAGUE PART No.
C99	220	50V			DM-19-221J	CPR-220J	CD15FD221J03	SX322	424ME2200J501
C100	.01				CCD-103	CK-103	MGP01	TA110	TG-S10
C101	50	50V			DM-15-500J	CPR-47J	CD15ED510J03	SX447	424MC51R0J501
C102	.04					DD-403		GP140	
C103	5				DM-15-050D		CD15CD050D03	SX550	
C104	2	50V							
C105	.01				CCD-103	CK-103	MGP01	TA110	TG-S10
C106	100	50V	10%		DM-15-101J	CPR-100J	CD15FD101J03	SX310	424MC1000J501
C107	.04					DD-403		GP140	
C109	40		10%		DM-15-390J	CPR-39J	CD15ED390J03	SX439	MS-44
C112	90	50V	10%		DM-15-910J	CPR-91J		SX491	MS-491
C114	.01				CCD-103	CK-103	MGP01	TA110	TG-S10
C116	.02	50V			1DP-1-203			EWF1A122	1PB-S22
C117	.005				CCD-502	CK-502	MGP005	TA250	TG-D50
C118	.01				CCD-103	CK-103	MGP01	TA110	TG-S10
C119	.02	50V			1DP-1-203			EWF1A122	1PB-S22
C120	.001	50V				CPR-1000J		EWF1A210	1PB-D10
C123	.01				CCD-103	CK-103	MGP01	TA110	TG-S10
C124	.01				CCD-103	CK-103	MGP01	TA110	TG-S10
C200	.01				CCD-103	CK-103	MGP01	TA110	TG-S10
C201	20				CCT0-200	DTZ-20	NP020	CN0420	10TCC-Q20
C202	20				CCT0-200	DTZ-20	NP020	CN0420	10TCC-Q20
C203	20				CCT0-200	DTZ-20	NP020	CN0420	10TCC-Q20
C204	20				CCT0-200	DTZ-20	NP020	CN0420	10TCC-Q20
C205	20				CCT0-200	DTZ-20	NP020	CN0420	10TCC-Q20
C206	20				CCT0-200	DTZ-20	NP020	CN0420	10TCC-Q20
C207	20				CCT0-200	DTZ-20	NP020	CN0420	10TCC-Q20
C208	20				CCT0-200	DTZ-20	NP020	CN0420	10TCC-Q20
C209	.04					DD-403		GP140	
C210	.01				CCD-103	CK-103	MGP01	TA110	TG-S10
C211	500				CCD-501	DD-501	GP500	GP350	10TS-T50

CONTROLS (All wattages 1/2 watt, or less, unless listed)

ITEM No.	FUNCTION	RESIST-ANCE	REPLACEMENT DATA				
			MFGR. PART No.	CENTRALAB PART No.	CLAROSTAT PART No.	CTS—IRC PART No.	MALLORY PART No.
VR-1	Meter Adjust	10K		TSV-10K (1) or T-10K (1)	C-103 (1)	X201R103B (1)	MTC14L1 (1)
VR-2	Meter Adjust	10K		TSV-10K (1) or T-10K (1)	C-103 (1)	X201R103B (1)	MTC14L1 (1)
VR-3	RF Gain	30K		TSV-50K (1) or T-50K (1)	C-503 (1)	X201R503B (1)	MTC54L1 (1)
VR-4	Squelch	50K	EVC-B0AK20B54	F1-50K (2), SSK014	A47-50K-S (2), KSS-3 or [NP-50K-S (2), UP-C-400]	Q11-123 (2) or [BU1 (2), CF12, SS1, DC1] *	RU54L,SL36,SL1500 or [UA54L (2), SK1000] or U35 (2)
VR-5	Squelch Range	50K		TSV-50K (1) or T-50K (1)	C-503 (1)	X201R503B (1)	MTC54L1 (1)
VR-6	Volume/Switch	10K	EVC-B0LK20A14	F2-10K (2), SSK014,KR-2	A47-10K-Z (2), KSS33,SWE-20 or [NP-10K-Z (2), UP-C-400, NWE-20]	Q13-116 (2),76-2 76-2 or [BU1 (2), CF61, SS1, WF] *	RU14A,SL36,SL1500, US42 or [UA14A (2), SK1000,US42] or [U18 (2), US27]
VR-7	Mic Gain	10K	EVC-B0AK20A14	F2-10K (2), SSK014	A47-10K-A (2), KSS-3 or [NP-10K-Z (2), UP-C-400]	Q13-116 (2) or [BU1 (2), CF61, SS1, DC1] *	RU14A,SL36,SL1500 or [UA14A (2), SK1000] or U18 (2)
VR-8	Voltage Adjust	300		T-300 or TSV-500	C-501	X201R351B	MTC32L1
VR-9	Modulation	30K		TSV-50K (1) or T-50K (1)	C-503 (1)	X201R503B (1)	MTC54L1 (1)

(1) Cut off one of the end terminals and bend to fit PC board.
(2) Enlarge mounting hole.

* SNAPTROL"

RESISTORS (Power and Special)

ITEM No.	RATING	REPLACEMENT DATA	
		WORKMAN PART No.	MFGR. PART No.
R51	.5, 1/4W (Film)		
R59	270,1W,10%(Film)		

ITEM No.	RATING	REPLACEMENT DATA	
		WORKMAN PART No.	MFGR. PART No.
R94	10,3W,10% (Film)		

PARTS LIST AND DESCRIPTION (CONTINUED)

(When ordering parts, state Model, Part Number, and Description.)

COILS (RF-IF)

ITEM No.	USE	REPLACEMENT DATA			
		PART No.	MEISSNER PART No.	MILLER PART No.	WORKMAN PART No.
L1	TVI Trap	TC-71024			
L2	RF Filter	TC-71031			
L4	RF Filter (5 turns)	TC-71025			
L5	Ant Matching	TKXN-22160BU			
L6	RF	TKXN-22534			
L7	Synthesizer	KXN-22535			
L8	Xmtr. Mixer (Pri.)	KXN-13638HM			
L9	Xmtr. Mixer (Sec.)	KXN-13638HM			
L10	Xmtr. Mixer (Ter.)	KXN-13636BM			
L11	Xmtr. Buffer	TC-71026			
L12	Xmtr. Driver	TC-71023			
L13	RF Choke (2.2uh)	2R2	19-1002	74F226AP	T812
L14	RF Choke (.8uh)	TC-71029	19-3001	6175	T804
L16	RF Choke (8uh)	TC-71030	19-2015	74F826AP	T822
L17	RF Choke (.5uh)	NS-1373	19-2005	458B	T958
L18	RF Choke (2.2uh)	2R2	19-1002	74F226AP	T812
T1	1st Mixer (Pri.)	TKAC-225361E			
T2	1st Mixer (Sec.)	TKAC-21165A			
T3	Input IF	YLN-20844BM	16-9026	2066	
T4	Interstage IF	YMC-20845AC	16-9027	2067	
T5	Output IF	YMC-20846AC	16-9028	2068	

FILTER CHOKE

ITEM No.	RATINGS			REPLACEMENT DATA				NOTES
	CURRENT (Measured)	DC RES.	INDUCTANCE (0 CURRENT 1000~)	MFGR. PART No.	STANCOR PART No.	THORDARSON PART No.	TRIAD PART No.	
L14	1300ma Maximum	.1	1.3mh	115C				

TRANSFORMER (Driver)

ITEM No.	TURNS RATIO			REPLACEMENT DATA				NOTES
	PRI.	SEC. 1	SEC. 2	MFGR. PART No.	STANCOR PART No.	THORDARSON PART No.	TRIAD Part No.	
T6	1	1 CT		69M				

TRANSFORMER (Power)

ITEM No.	RATING		REPLACEMENT DATA				NOTES
	PRI.	SEC. 1	MFGR. PART No.	STANCOR PART No.	THORDARSON PART No.	TRIAD PART No.	
T8	120VAC @ .5 Amp	38VAC, CT @ 1.5 Amp	N60-7979PT (115B)				

TRANSFORMER (Audio Output)

ITEM No.	IMPEDANCE			REPLACEMENT DATA				NOTES
	PRI.	SEC. 1	SEC. 2	MFGR. PART No.	STANCOR PART No.	THORDARSON PART No.	TRIAD PART No.	
T7	32	8	.6 DC Resis-tance	N28-751BM (UT-115)				

PARTS LIST AND DESCRIPTION (CONTINUED)

(When ordering parts, state Model, Part Number, and Description.)

SPEAKER

ITEM No.	TYPE	REPLACEMENT DATA		NOTES
		MFGR. PART No.	QUAM PART No.	
SP1	3 1/2" PM, 8 ohms	9P10S	3A05Z8	

FUSE DEVICES

ITEM No.	DESCRIPTION	REPLACEMENT DATA						
		PART No.		BUSS PART No.		LITTELFUSE PART No.		WORKMAN PART No.
		DEVICE	HOLDER	DEVICE	HOLDER	DEVICE	HOLDER	DEVICE
F1	.7A, Quick-Acting		NRF-00301-2	AGC 3/4	HKP	312.750	342001	
F2	2A, Quick-Acting		RF104	AGC 2	HDJ	312002	150145	

MISCELLANEOUS

ITEM No.	PART NAME	PART No.	NOTES
F1L	Ceramic Filter	LF-B6	
M	Meter		
S1	Switch	R71N1008	Channel Selector
S3	Switch	869S1024	Receiv-o-slide
S4	Switch		S/RF/Mod
X1	Crystal		37.600MHz
X2	Crystal		37.650MHz
X3	Crystal		37.700MHz
X4	Crystal		37.750MHz
X5	Crystal		37.800MHz
X6	Crystal		37.850MHz
X7	Crystal		10.635MHz
X8	Crystal		10.625MHz
X9	Crystal		10.615MHz
X10	Crystal		10.595MHz
X11	Crystal		10.180MHz
X12	Crystal		10.170MHz
X13	Crystal		10.160MHz
X14	Crystal		10.150MHz

ACCESSORIES

ITEM	MFGR. PART No.	REMARKS
Microphone	22-115-32	

WIRING DATA

General-use Hook-up Wire ..... Use BELDEN No. 8530 (Solid) Available in 12 Colors
8524 (Stranded) Available in 12 Colors
Shielded Antenna Lead ..... Use BELDEN No. 8214 Lowest-loss (RG-8/U Type)
8237 Low-loss (RG-8/U)
8240 (Solid) Miniature (RG-58/U)
8259 (Stranded) Miniature (RG-58A/U)
Coiled Microphone Cable ..... Use BELDEN No. 8497 3-Conductor,1 Shielded,for Press-to-Talk (Neoprene)
8496 3-Conductor,1 Shielded,for Press-to-Talk (Vinyl)
Ignition Noise Suppression ..... Use BELDEN No. 7300-Series Spark-Plug Sets
Bonding Strap ..... Use BELDEN No. 8661 (3/8 In.)

For Supplier Address See PHOTOFACT Index

NOTE

ONLY THOSE PERSONS PROPERLY LICENSED ARE PERMITTED TO MAKE REPAIRS OR ADJUSTMENTS WHICH MAY RESULT IN ILLEGAL OPERATION. (REFER TO FCC RULES AND REGULATIONS PART 95, SUBPARTS C & D.)

The frequency of the transmitter should be checked periodically with a secondary frequency standard to insure proper and legal operation.

Best results will be obtained when adjusting the final RF output circuit if the antenna normally used is connected and the chassis is as nearly in the cabinet as possible.

Connect either 50-ohm dummy load or the normally used antenna system.

MODEL HB-525F (99-32492W)

ALIGNMENT INSTRUCTIONS

Suggested Alignment Tools:
L1 thru L11, L14, L17, L21.....GC ELECTRONICS #9440
L13,L18,L19,L20,L22,L23,MF ....GC ELECTRONICS #9089, 9087

RECEIVER

Connect an AC VTVM across speaker voice coil. Set Squelch fully counterclockwise, and Delta tuning switch in center position. Adjust Volume Control to obtain a suitable meter reading.

SIGNAL GENERATOR	CHANNEL	ADJUST	REMARKS
Connect high side thru .01mfd to anode of D2 (2nd Mixer), low side to ground. Set to 455kHz. (Mod.).	Any	MF, L20, L22, L23	Adjust for maximum.
Connect high side thru .01mfd to antenna connector, low side to chassis. Set to 27.085MHz. (Mod.).	11	L3,L4, L5,L15, L16,L17	Adjust for maximum.

SQUELCH ADJUSTMENT

SIGNAL GENERATOR	CHANNEL	ADJUST	REMARKS
Connect high side thru .01mfd to antenna connector, low side to chassis. Set to 27.085MHz.(Mod.). Set Output Level at 10mV.	11	VR3	Set Squelch fully clockwise. Adjust until squelch just opens.

S-METER ADJUSTMENT

SIGNAL GENERATOR	CHANNEL	ADJUST	REMARKS
As above. Set Output Level at 150uV.	11	VR5	Adjust for reading of 9 on S-RF meter.

HOWARD W. SAMS & CO., INC. Indianapolis, Indiana 46206

TRANSMITTER

INDICATOR	ADJUST	REMARKS
Connect an RF Wattmeter between antenna connector and dummy load.	L6, L7, L8, L9, L10, L11, L13, VC	Key transmitter. Adjust for maximum.
As above. Insert 0-500ma DC ammeter in collector circuit of TR8 (Final Amp) at TP7.	VR6	Adjust for 5 watts input.

RF METER ADJUSTMENT

INDICATOR	ADJUST	REMARKS
As above	VR6	Adjust for desired RF meter reading.

MODULATION ADJUSTMENT

INDICATOR	ADJUST	REMARKS
Connect a modulation monitor between antenna connector and dummy load. Connect an audio generator to microphone connector, high side to center pin, low side to ground. Set frequency to 1kHz, output level at 10mv.	VR4	Adjust for 80% modulation.
TVI ADJUSTMENT TV Receiver (Ch. 2).	L14	Adjust for MINIMUM interference.

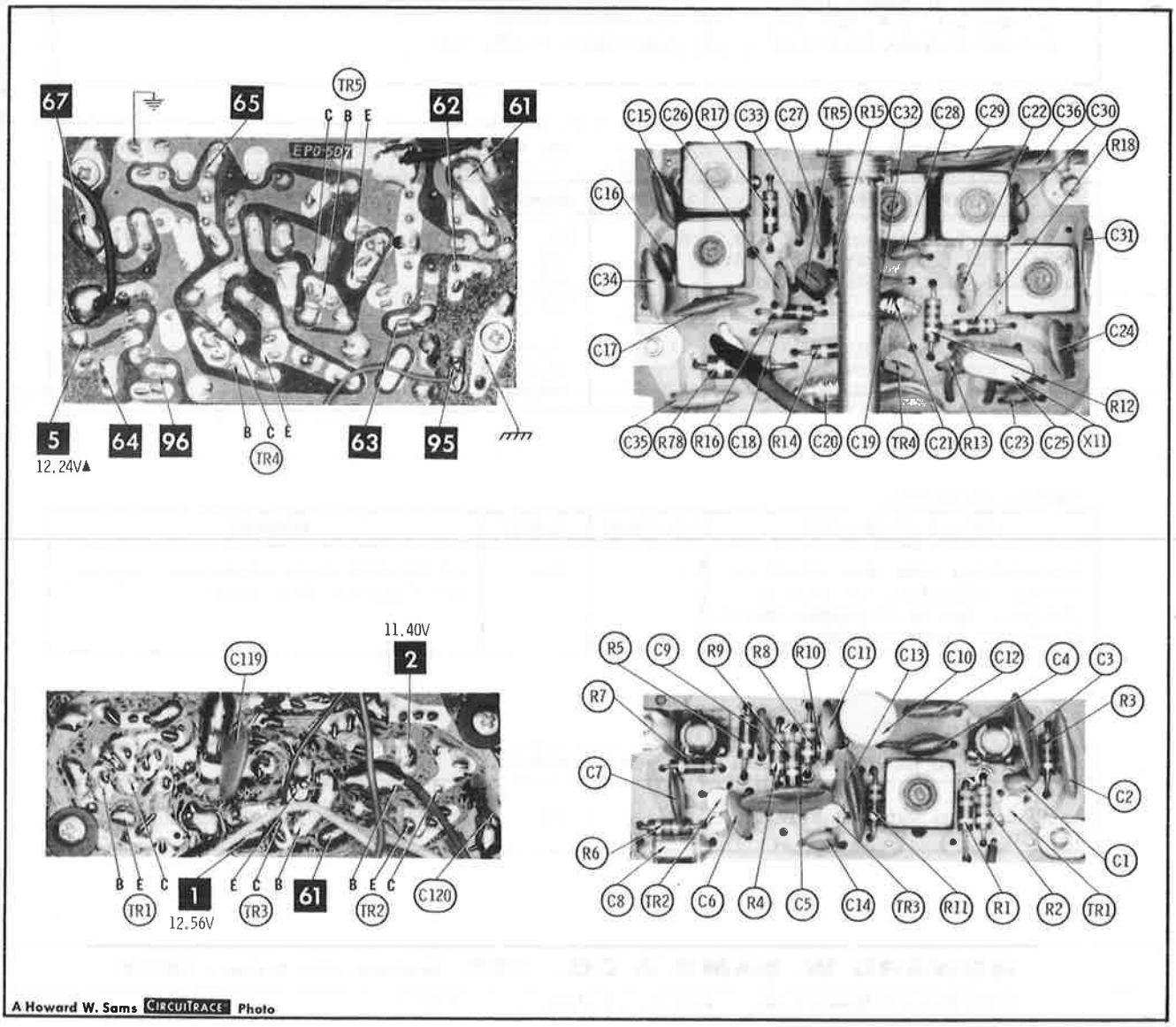

A Howard W. Sams CIRCUITRACE Photo

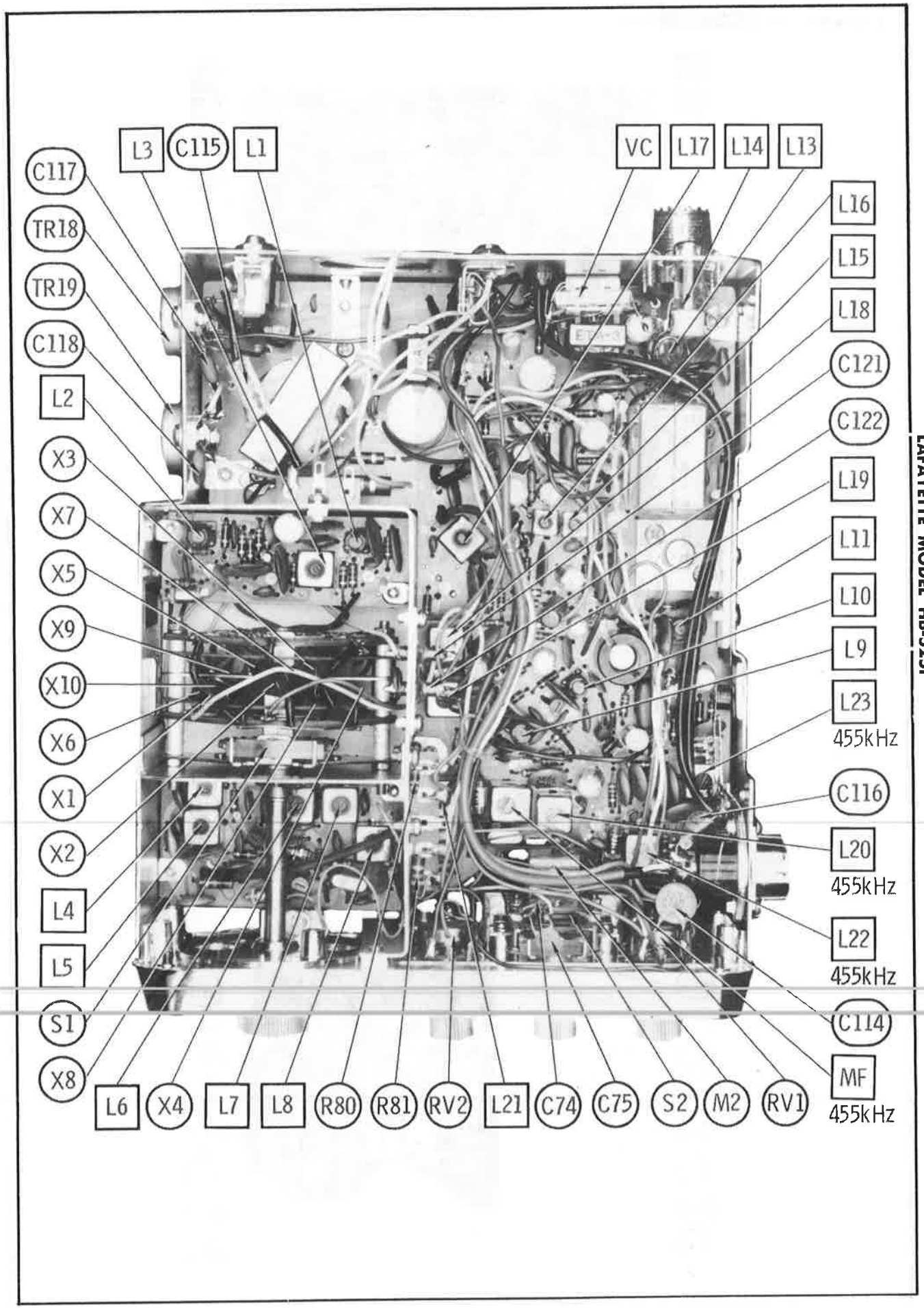
L3
C115
L1
VC
L17
L14
L13
C117
TR18
TR19
C118
L2
X3
X7
X5
X9
X10
X6
X1
X2
L4
L5
S1
X8
L6
X4
L7
L8
R80
R81
RV2
L21
C74
C75
S2
M2
RV1
L16
L15
L18
C121
C122
L19
L11
L10
L9
L23
455kHz
C116
L20
455kHz
L22
455kHz
C114
MF
455kHz

A Howard W. Sams CIRCUITRACE® Photo

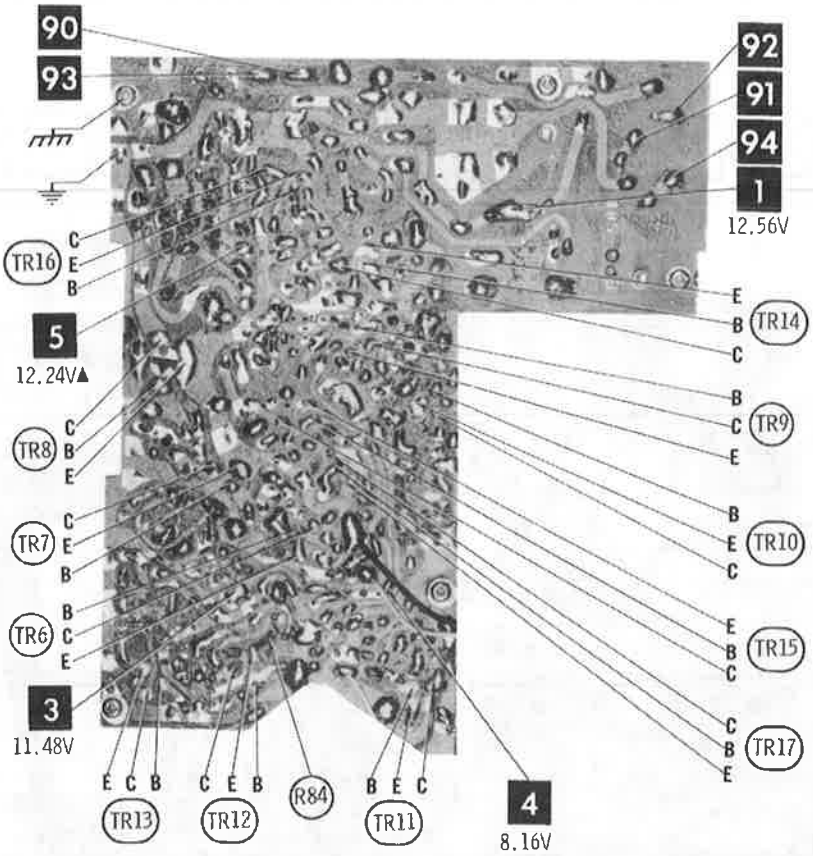

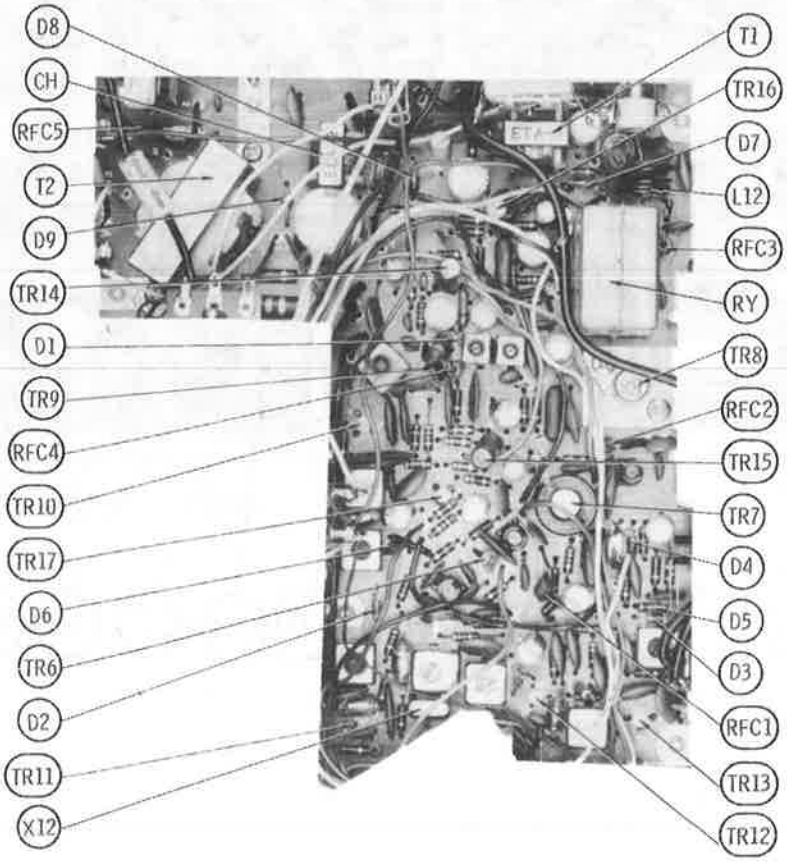

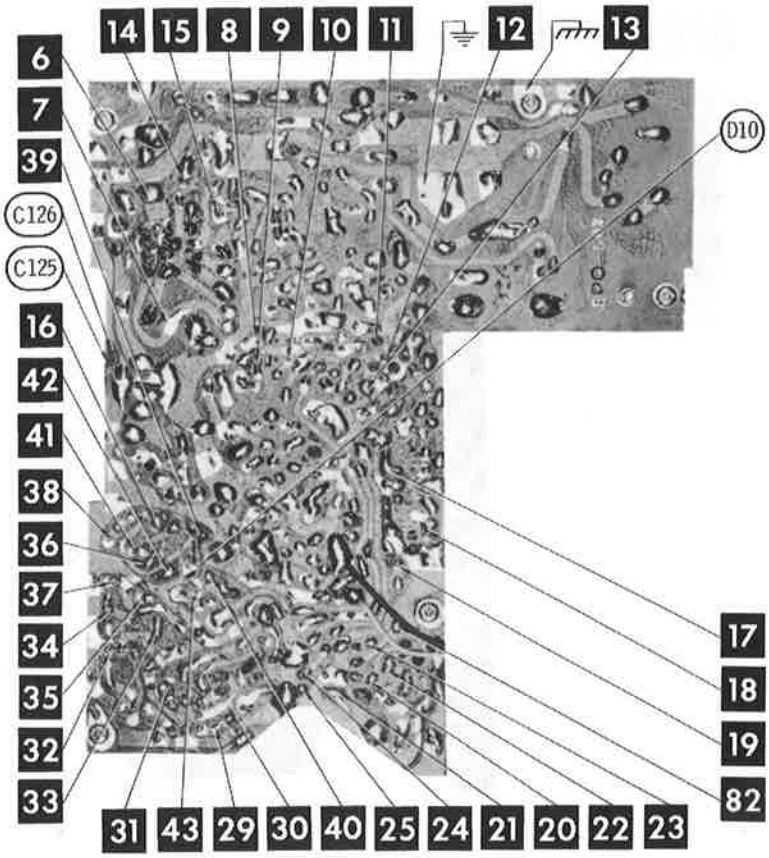
14
15
8
9
10
11
12
13
6
7
39
C126
C125
16
42
41
38
36
37
34
35
32
33
D10
17
18
19
82
31
43
29
30
40
25
24
21
20
22
23

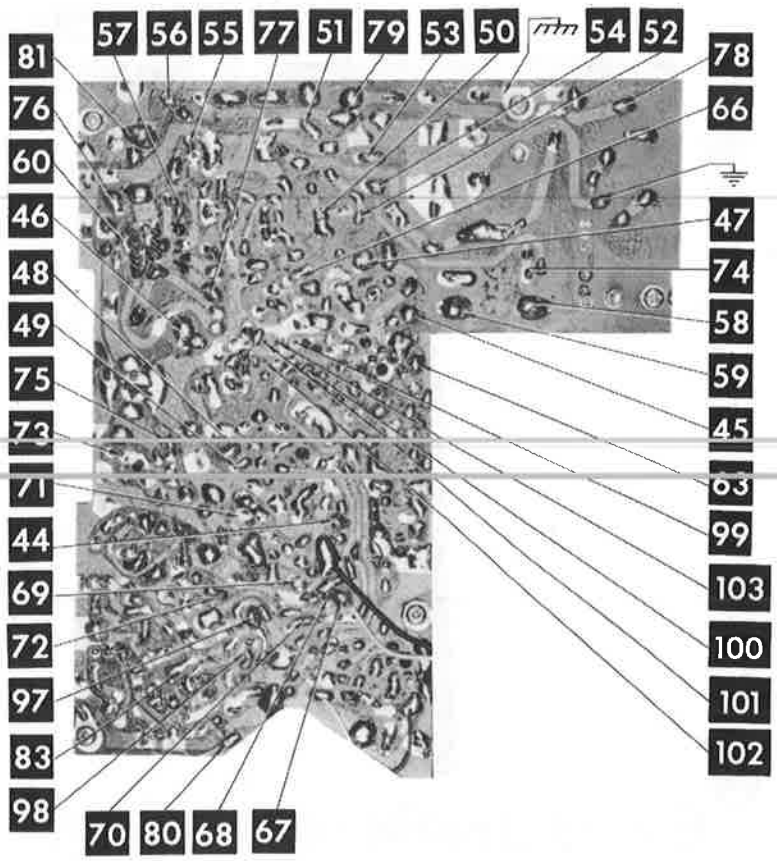
57
56
55
77
51
79
53
50
54
52
81
76
60
46
48
49
75
73
71
44
69
72
97
83
98
78
66
47
74
58
59
45
63
99
103
100
101
102
70
80
68
67

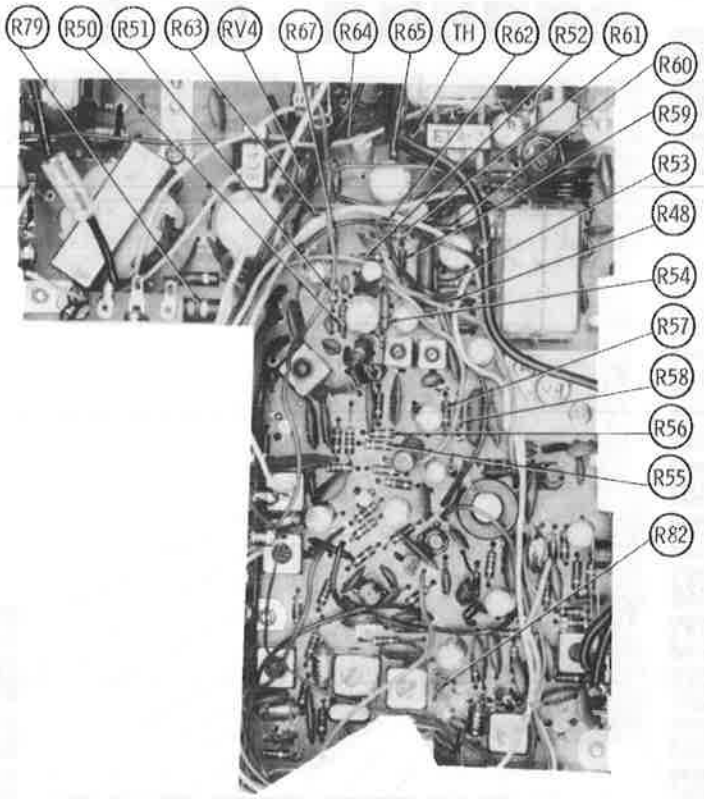
R79
R50
R51
R63
RV4
R67
R64
R65
TH
R62
R52
R61
R60
R59
R53
R48
R54
R57
R58
R56
R55
R82

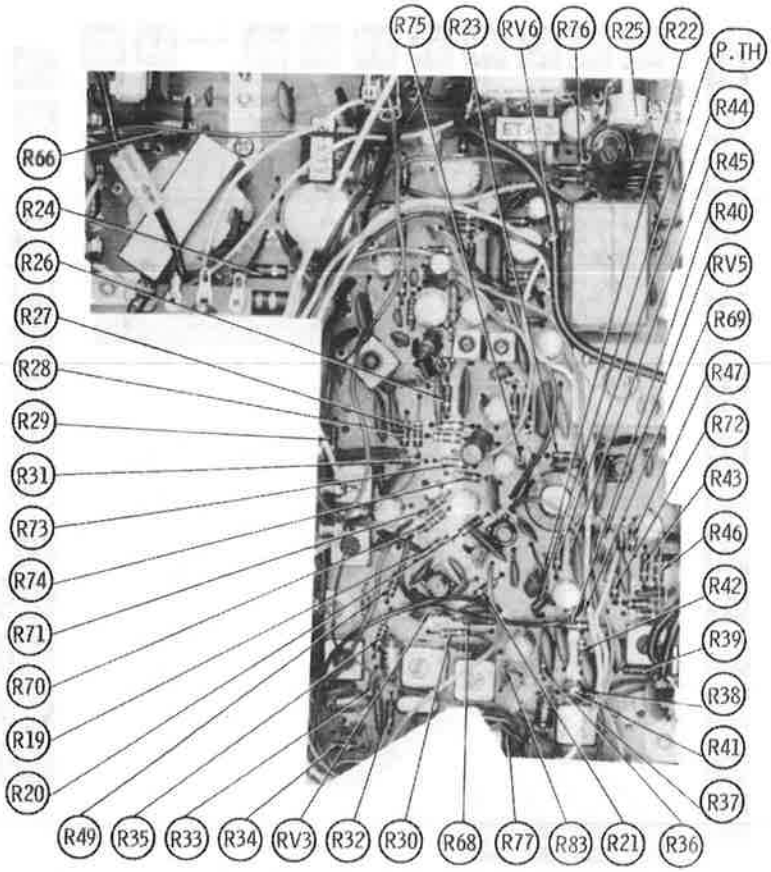
R75
R23
RV6
R76
R25
R22
P.TH
R44
R45
R40
RV5
R69
R47
R72
R43
R46
R42
R39
R38
R41
R37
R66
R24
R26
R27
R28
R29
R31
R73
R74
R71
R70
R19
R20
R49
R35
R33
R34
RV3
R32
R30
R68
R77
R83
R21
R36

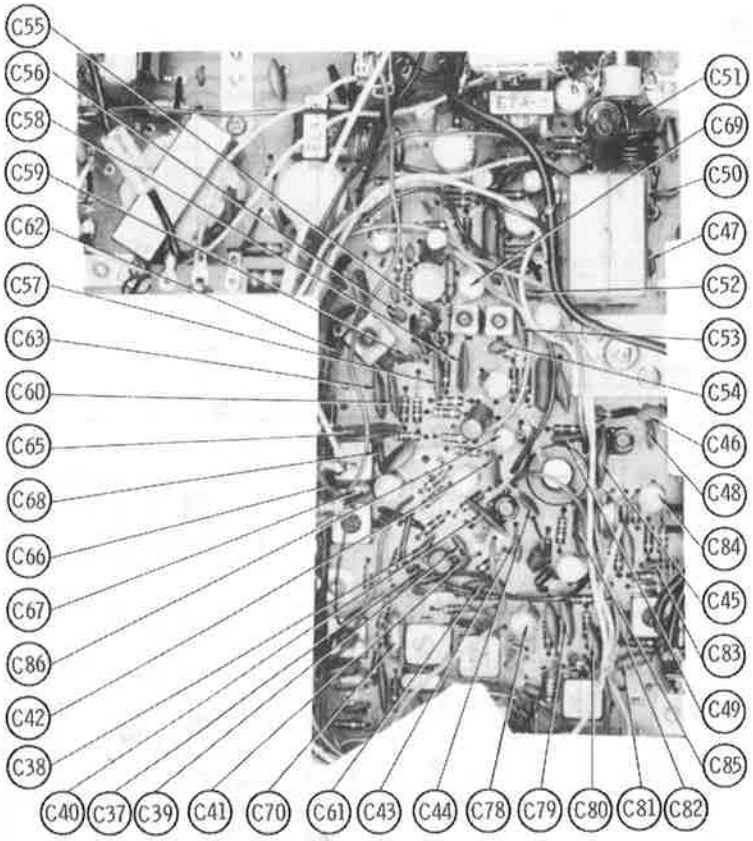
C55
C56
C58
C59
C62
C57
C63
C60
C65
C68
C66
C67
C86
C42
C38
C40
C37
C39
C41
C70
C61
C43
C44
C78
C79
C80
C81
C82
C51
C69
C50
C47
C52
C53
C54
C46
C48
C84
C45
C83
C49
C85

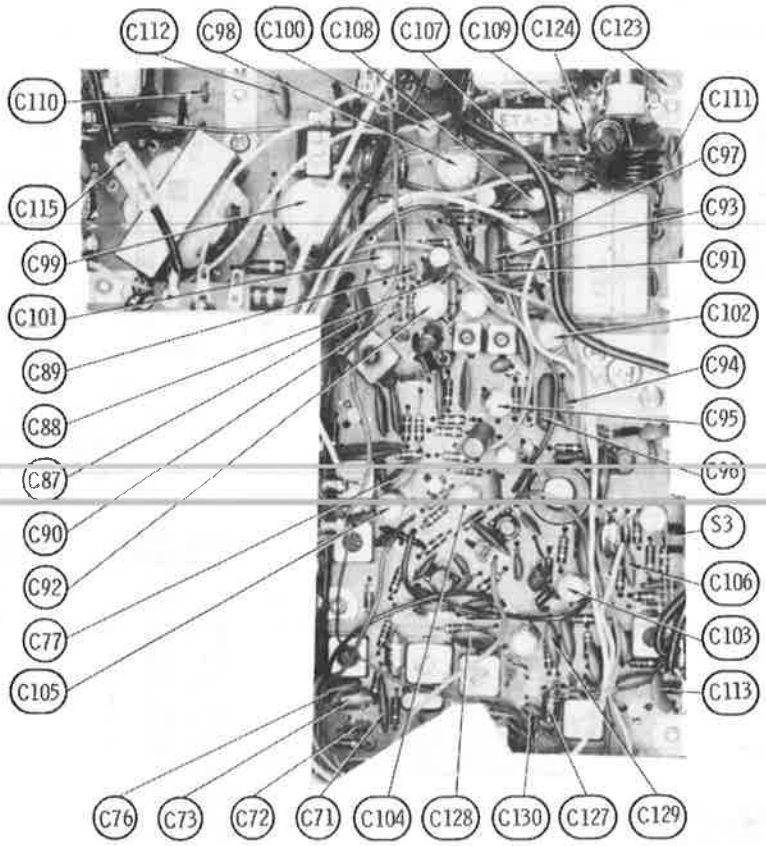
C112
C98
C100
C108
C107
C109
C124
C123
C110
C115
C99
C101
C89
C88
C87
C90
C92
C77
C105
C76
C73
C72
C71
C104
C128
C130
C127
C129
C111
C97
C93
C91
C102
C94
C95
C96
S3
C106
C103
C113

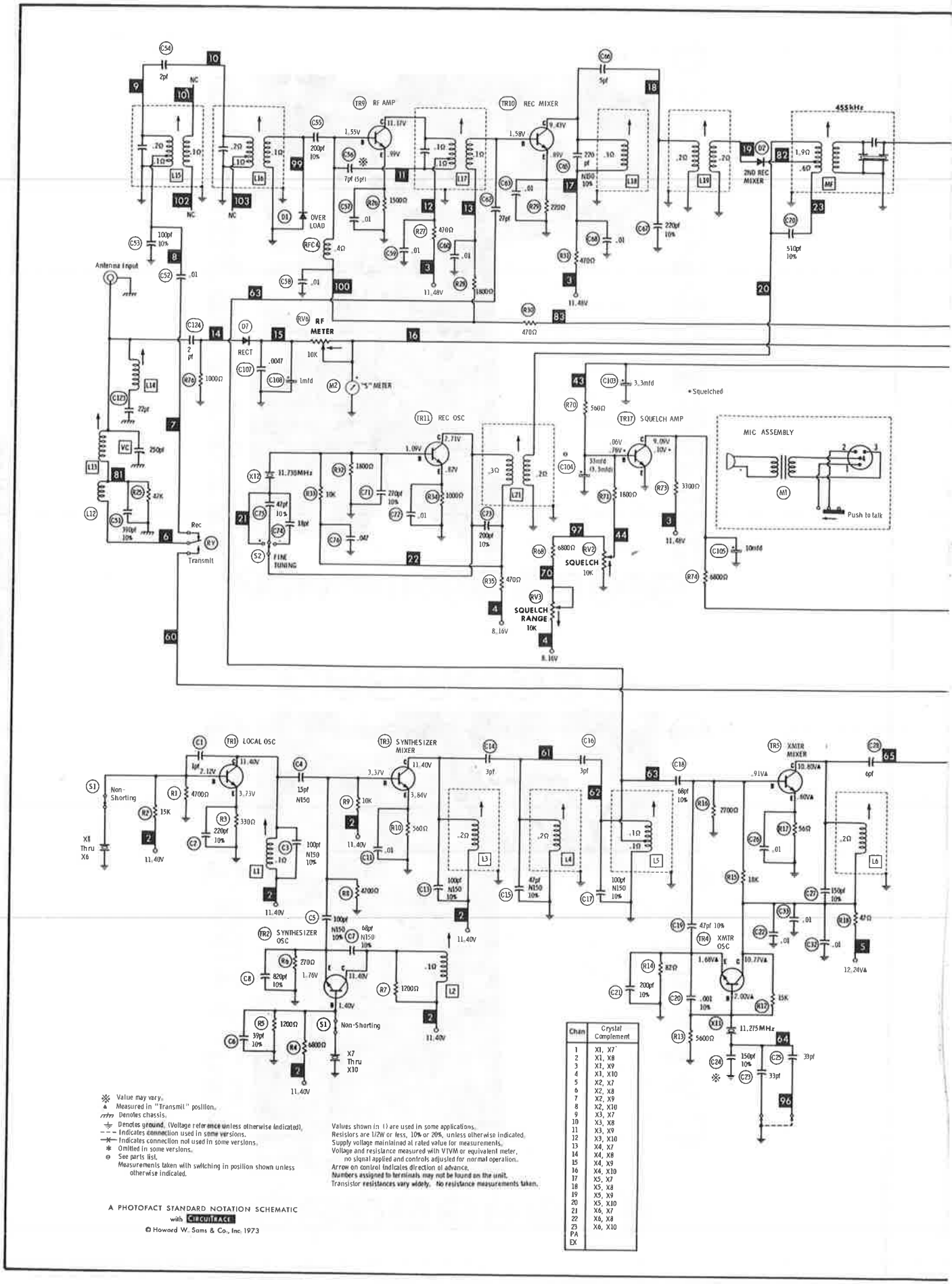

Chan	Crystal Complement
1	X1, X7
2	X1, X8
3	X1, X9
4	X1, X10
5	X2, X7
6	X2, X8
7	X2, X9
8	X2, X10
9	X3, X7
10	X3, X8
11	X3, X9
12	X3, X10
13	X4, X7
14	X4, X8
15	X4, X9
16	X4, X10
17	X5, X7
18	X5, X8
19	X5, X9
20	X5, X10
21	X6, X7
22	X6, X8
23	X6, X10
PA	
EX	

※ Value may vary.
▲ Measured in "Transmit" position.
Denotes chassis.
Denotes ground. (Voltage reference unless otherwise indicated).
Indicates connection used in some versions.
Indicates connection not used in some versions.
* Omitted in some versions.
⊖ See parts list.
Measurements taken with switching in position shown unless otherwise indicated.

Values shown in () are used in some applications.
Resistors are 1/2W or less, 10% or 20%, unless otherwise indicated.
Supply voltage maintained at rated value for measurements.
Voltage and resistance measured with VTVM or equivalent meter, no signal applied and controls adjusted for normal operation.
Arrow on control indicates direction of advance.
Numbers assigned to terminals may not be found on the unit.
Transistor resistances vary widely. No resistance measurements taken.

A PHOTOFACT STANDARD NOTATION SCHEMATIC
with CIRCUITRACE

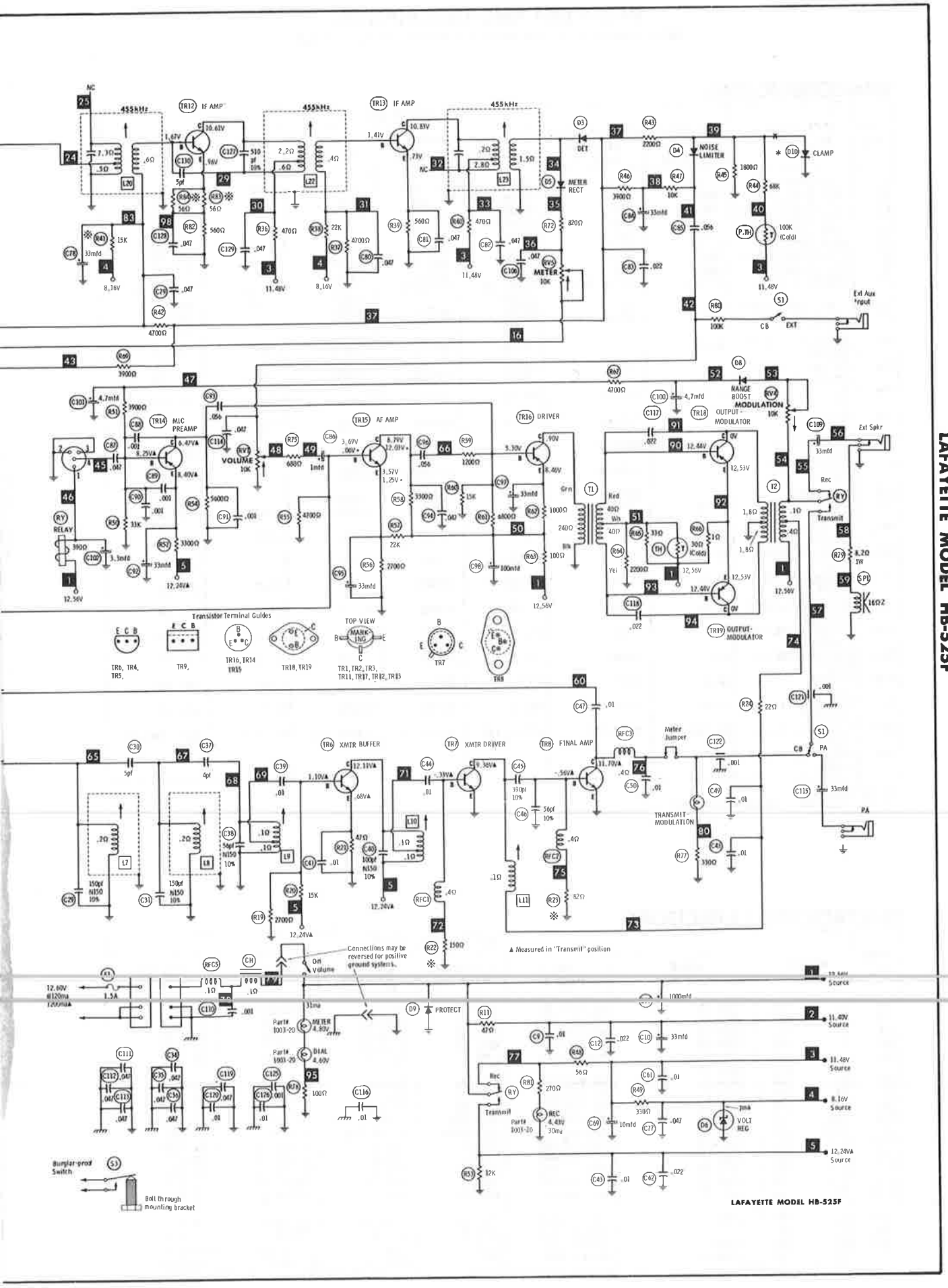
IF AMP
455kHz
DET
METER RECT
NOISE LIMITER
CLAMP
MLC PREAMP
VOLUME 10K
AF AMP
DRIVER
RANGE BOOST
MODULATION 10K
OUTPUT-MODULATOR
Ext Spkr
Ext Aux Input
CB
EXT
RELAY
Transmit
Rec
Transistor Terminal Guides
TOP VIEW
XMTR BUFFER
XMTR DRIVER
FINAL AMP
Meter Jumper
TRANSMIT-MODULATION
PA
Connections may be reversed for positive ground systems.
On Volume
PROTECT
VOLT REG
Bumper-proof Switch
Bolt through mounting bracket
LAFAYETTE MODEL HB-525F

PARTS LIST AND DESCRIPTION

(When ordering parts, state Model, Part Number, and Description.)

SEMICONDUCTORS

ITEM No.	TYPE / MFGR. No./PART No.	REPLACEMENT DATA						
		GENERAL ELECTRIC PART No.	INTERNATIONAL RECTIFIER PART No.	MALLORY PART No.	MOTOROLA PART No.	RCA PART No.	SPRAGUE PART No.	SYLVANIA PART No.
D1	1S1555/1937-17	GE-300	D200	PTC214	HEPR0600	SK3100	RT218	ECG 177
D2	1N60 (1S34)/1206-17	1N60	1N60	PTC206	HEP135	SK3088		ECG 109
D3	1N60 (1S34)/1206-17	1N60	1N60	PTC206	HEP135	SK3088		ECG 109
D4	1N60 (1S34)/1206-17	1N60	1N60	PTC206	HEP135	SK3088		ECG 109
D5	1N60 (1S34)/1206-17	1N60	1N60	PTC206	HEP135	SK3088		ECG 109
D6	RD9AL/1794-17	GE-X11	Z-1208	ZB8.2	HEPZ0411	SK-3060	RT-240	ECG 5072
D7	1N60 (1S34)/1206-17	1N60	1N60	PTC206	HEP135	SK3088		ECG 109
D8	1N60 (1S34)/1206-17	1N60	1N60	PTC206	HEP135	SK3088		ECG 109
D9	V06C/1949-17	GE-504A	8D4 or 5A4D	PTC201 or PTC202	HEPR0052	SK3030 or SK3031	RT213 or RT214	ECG 116 or ECG 117
D10	1N60 (1S34)/1206-17	1N60	1N60	PTC206	HEP135	SK3088		ECG 109
TR1	2SC183(R)/1210-17 (2SCF11)	GE-10	TR-70	PTC126	HEP723	SK3018	RT107	ECG 107
TR2	2SC183(R)/1210-17 (2SCF11)	GE-10	TR-70	PTC126	HEP723	SK3018	RT107	ECG 107
TR3	2SC184(R)/1634-17 (2SCF11)	GE-10	TR-70	PTC126	HEP723	SK3018	RT107	ECG 107
TR4	2SC815/1879-17 (2SCF5)	GE-20	IRTR-87	PTC125	HEP736	SK3020	RT102	ECG 123A
TR5	2SC815/1879-17 (2SCF5)	GE-20	IRTR-87	PTC125	HEP736	SK3020	RT102	ECG 123A
TR6	2SC815/1879-17 (2SCF5)	GE-20	IRTR-87	PTC125	HEP736	SK3020	RT102	ECG 123A
TR7	2SC781/1916-17 (2SCF6)		IRTR-87		HEPS3001	SK3048		ECG 195
TR8	2SCF8/1068-17		IRTR-65		HEPS3001	SK3049		ECG 224
TR9	2SC460(A)/1373-17 (2SCF2)	GE-17	IRTR-62	PTC101	HEP720	SK3039	RT107	ECG 108
TR10	2SC184(R)/1634-17 (2SCF11)	GE-10	TR-24	PTC126	HEP723	SK3018	RT107	ECG 107
TR11	2SC183(R)/1210-17 (2SCF11)	GE-10	TR-70	PTC126	HEP723	SK3018	RT107	ECG 107
TR12	2SC183(R)/1210-17 (2SCF11)	GE-10	TR-70	PTC126	HEP723	SK3018	RT107	ECG 107
TR13	2SC183(R)/1210-17 (2SCF11)	GE-10	TR-70	PTC126	HEP723	SK3018	RT107	ECG 107
TR14	2SB77(B)/1060-17 (2SBF1)	GE-2	TR-85	PTC109	HEP254	SK3004	RT121	ECG 102A
TR15	2SD77(B)/1906-17 (2SDF1)	GE-8	TR-08	PTC108	HEP641	SK3010	RT119	ECG 103
TR16	2SB77(C) (2SBF1A)	GE-52	TR-85	PTC109	HEP254	SK3004	RT121	ECG 102A
TR17	2SC183(P)/2134-17 (2SCF11)	GE-10	TR-70	PTC126	HEP723	SK3018	RT107	ECG 107
TR18	2SB337(A)/1559-17 (2SBF5)	GE-13MP (6)	TR-02 (7)	PTC105 (7)	HEP230 (7)	SK3013 (6)	RT124 (7)	ECG 104MP(6)
TR19	2SB337(A)/1559-17 (2SBF5)							

(6) Matched Pair.
(7) Two required - select matched pair.

ELECTROLYTIC CAPACITORS

ITEM No.	RATING		REPLACEMENT DATA					
			MFGR. PART No.	ARCO PART No.	CENTRALAB PART No.	CORNELL-DUBILIER PART No.	MALLORY PART No.	SPRAGUE PART No.
C10	33	16V	3104-12	ME-3-E-035	EP15-25	PC30-25	MTV30CB25	EV-1325
C69	10	16V	2986-12	RME-B-E-010	EP15-10	PC10-25	VTT10A25	EV-1222
C78	33	10V	3089-12	ME-3-D-035	EP15-25	PC30-25	VTT33A10	EV-1125
C84	33	10V	3089-12	ME-3-D-035	EP15-25	PC30-25	VTT33A10	EV-1125
C86	1	50V		RME-A-J-001	EP50-2	PC1-50	MTV1CB50	EV-1615
	1	25V	3084-12					
C92	33	16V	3104-12	ME-3-E-035	EP15-25	PC30-25	MTV30CB25	EV-1325
C95	33	10V	3089-12	ME-3-D-035	EP15-25	PC30-25	VTT33A10	EV-1125
C97	33	16V	3104-12	ME-3-E-035	EP15-25	PC30-25	MTV30CB25	EV-1325
C98	100	16V	3078-12	RME-E-E-100	EP15-100	PC100-16	MTV100CD15	EV-1233300
C99	1000	16V	3568-12	RME-N-E-1000	EA15-1000	PC1000-116	TC1501B	EV-1260
C100	4.7	25V	3090-12	RME-A-G-005	EP30-5	PC5-50	VTT4R7A50	EV-1319
C101	4.7	25V	3090-12	RME-A-G-005	EP30-5	PC5-50	VTT4R7A50	EV-1319
C102	3.3	50V	3363-12	RME-B-J-005	EP50-5	PC5-50	VTT4R7A50	EV-1519
C103	3.3	50V	3363-12	RME-B-J-005	EP50-5	PC5-50	VTT4R7A50	EV-1519
C104	33	10V	3089-12	ME-3-D-035	EP15-25	PC30-25	VTT33A10	EV-1125
C105	10	16V	2986-12	RME-B-E-010	EP15-10	PC10-25	VTT10A25	EV-1222
C108	1	50V		RME-A-J-001	EP50-2	PC1-50	MTV1CB50	EV-1615
C109	33	16V	3104-12	ME-3-E-035	EP15-25	PC30-25	MTV30CB25	EV-1325
C115	33	16V	3564-12	ME-3-E-035	EA15-25	WBR35-50	MTA30D15	TVA-1149.1

PARTS LIST AND DESCRIPTION (CONTINUED)

(When ordering parts, state Model, Part Number, and Description.)

CAPACITORS (cont)

ITEM No.	RATING	MFGR. PART No.	REPLACEMENT DATA				
			ARCO/ELMENCO PART No.	CENTRALAB PART No.	CORNELL-DUBILIER PART No.	MALLORY PART No.	SPRAGUE PART No.
C1	1					CN0510	10TCC-V10
C2	220 10%		CCD-221	DD-221	GP220	GP322	10TS-T22
C3	100 N150 10%		*			*	10TCP-T10
C4	15 N150		*			*	10TCP-Q15
C5	100 N150 10%		*			*	10TCP-T10
C6	39 10%					CN0439	10TCC-Q39
C7	68 N150 10%		*			*	10TCP-Q68
C8	820 125V 10%		DM-20-821J	CPR-820J	CD19FD821J03	SX382	424ME8200J501
C9	.01		CCD-103	CK-103	MGP01	TA110	TG-S10
C11	.01		CCD-103	CK-103	MGP01	TA110	TG-S10
C12	.022		CCD-203	CK-203	MGP02	TA120	TG-S20
C13	100 N150 10%		*			*	10TCP-T10
C14	3						10TCC-V30
C15	47 N150 10%		*			*	10TCP-Q47
C16	3						10TCC-V30
C17	100 N150 10%		*			*	10TCP-T10
C18	68 10%			DTZ-68		CN0468	10TCC-Q68
C19	47 10%		CCT0-470	DTZ-47	NP047	CN0447	10TCC-Q47
C20	.001 125V 10%		DM-20-102J	CPR-1000J	CD19FD102J03	SX210	424ME1001J501
C21	200 125V 10%		DM-19-201J	CPR-200J	CD15FD201J03	SX320	424ME2000J501
C22	.01		CCD-103	CK-103	MGP01	TA110	TG-S10
C23	33		CCT0-330	DTZ-33	NP033	CN0433	10TCC-Q33
C24	150 10%		CCD-151	DD-151	GP150	GP315	10TS-T15
C25	33		CCT0-330	DTZ-33	NP033	CN0433	10TCC-Q33
C26	.01		CCD-103	CK-103	MGP01	TA110	TG-S10
C27	150 10%		CCD-151	DD-151	GP150	GP315	10TS-T15
C28	6			DTZ-6R8	NP06P8	CN0568	10TCC-V68
C29	150 N150 10%	3071-12	*			*	10TCP-T15
C30	5				NP05		10TCC-V50
C31	150 N150 10%	3071-12	*			*	10TCP-T15
C32	.01		CCD-103	CK-103	MGP01	TA110	TG-S10
C33	.01		CCD-103	CK-103	MGP01	TA110	TG-S10
C34	.047 25V		CCD-503	CK-503	MGP05	TA150	TG-S50
C35	.047 25V		CCD-503	CK-503	MGP05	TA150	TG-S50
C36	.047 25V		CCD-503	CK-503	MGP05	TA150	TG-S50
C37	4				NP03P9		10TCC-V39
C38	56 N150 10%		*			*	10TCP-Q56
C39	.01		CCD-103	CK-103	MGP01	TA110	TG-S10
C40	100 N150 10%		*			*	10TCP-T10
C41	.01		CCD-103	CK-103	MGP01	TA110	TG-S10
C42	.022		CCD-203	CK-203	MGP02	TA120	TG-S20
C43	.01		CCD-103	CK-103	MGP01	TA110	TG-S10
C44	.01		CCD-103	CK-103	MGP01	TA110	TG-S10
C45	390 10%		CCD-391	DD-391	GP390	GP339	10TS-T39
C46	56 10%		CCD-560	DD-560		GP456	10TS-Q56
C47	.01		CCD-103	CK-103	MGP01	TA110	TG-S10
C48	.01		CCD-103	CK-103	MGP01	TA110	TG-S10
C49	.01		CCD-103	CK-103	MGP01	TA110	TG-S10
C50	.01		CCD-103	CK-103	MGP01	TA110	TG-S10
C51	390 10%		CCD-391	DD-391	GP390	GP339	10TS-T39
C52	.01		CCD-103	CK-103	MGP01	TA110	TG-S10
C53	100 10%		CCT0-101	DTZ-100	NP0100	CN0310	10TCC-T10
C54	2			DTZ-2R2	NP02P2	CN0522	10TCC-V22
C55	200 125V 10%		DM-19-201J	CPR-200J	CD15FD201J03	SX320	424ME2000J501
C56	7			DTZ-6R8	NP06P8	CN0568	10TCC-V68
C57	.01		CCD-103	CK-103	MGP01	TA110	TG-S10
C58	.01		CCD-103	CK-103	MGP01	TA110	TG-S10
C59	.01		CCD-103	CK-103	MGP01	TA110	TG-S10
C60	.01		CCD-103	CK-103	MGP01	TA110	TG-S10
C61	.01		CCD-103	CK-103	MGP01	TA110	TG-S10
C62	27		CCT0-270		NP027	CN0427	10TCC-Q27
C63	.01		CCD-103	CK-103	MGP01	TA110	TG-S10
C65	220 N150 10%		*			*	10TCP-T22
C66	5				NP05		10TCC-V50
C67	220 125V 10%		DM-19-221J	CPR-220J	CD15FD221J03	SX322	424ME2200J501
C68	.01		CCD-103	CK-103	MGP01	TA110	TG-S10
C70	510 125V 10%		DM-19-511J	CPR-510J	CD15FD511J03	SX350	424ME5100J501
C71	270 10%		CCD-271	DD-271	GP270	GP327	10TS-T27
C72	.01		CCD-103	CK-103	MGP01	TA110	TG-S10
C73	200 125V 10%		DM-19-201J	CPR-200J	CD15FD201J503	SX320	424ME2000J501
C74	18		CCT0-180		NP018	CN0418	10TCC-Q18
C75	47 10%		CCT0-470	DTZ-47	NP047	CN0447	10TCC-Q47
C76	.047 25V		CCD-503	CK-503	MGP05	TA150	TG-S50
C77	.047 25V		CCD-503	CK-503	MGP05	TA150	TG-S50
C79	.047 25V		CCD-503	CK-503	MGP05	TA150	TG-S50
C80	.047 25V		CCD-503	CK-503	MGP05	TA150	TG-S50
C81	.047 25V		CCD-503	CK-503	MGP05	TA150	TG-S50
C82	.047 25V		CCD-503	CK-503	MGP05	TA150	TG-S50
C83	.022		CCD-203	CK-203	MGP02	TA120	TG-S20
C85	.056 50V		1DP-2-563		DPMS6S56	EWF1A156	1PB-S56
C87	.047 25V		CCD-503	CK-503	MGP05	TA150	TG-S50
C88	.001		CCD-102	DD-102	GP1000	SM210	2SS-D10
C89	.001		CCD-102	DD-102	GP1000	SM210	2SS-D10
C90	.001		CCD-102	DD-102	GP1000	SM210	2SS-D10
C91	.001		CCD-102	DD-102	GP1000	SM210	2SS-D10
C93	.056 50V		1DP-2-563		DPMS6S56	EWF1A156	1PB-S56
C94	.047 25V		CCD-503	CK-503	MGP05	TA150	TG-S50
C96	.056 50V		1DP-2-563		DPMS6S56	EWF1A156	1PB-S56

PARTS LIST AND DESCRIPTION (CONTINUED)

(When ordering parts, state Model, Part Number, and Description.)

CAPACITORS (cont)

ITEM No.	RATING	MFGR. PART No.	REPLACEMENT DATA				
			ARCO/ELMENCO PART No.	CENTRALAB PART No.	CORNELL-DUBILIER PART No.	MALLORY PART No.	SPRAGUE PART No.
C106	.047 25V		CCD-503	CK-503	MGP05	TA150	TG-S50
C107	.0047		CCD-502	CK-502	MGP005	TA250	TG-D50
C110	.001		CCD-102	DD-102	GP1000	GP210	10TS-D10
C111	.047 25V		CCD-503	CK-503	MGP05	TA150	TG-S50
C112	.047 25V		CCD-503	CK-503	MGP05	TA150	TG-S50
C113	.047 25V		CCD-503	CK-503	MGP05	TA150	TG-S50
C114	.047 25V		CCD-503	CK-503	MGP05	TA150	TG-S50
C116	.01		CCD-503	CK-503	MGP05	TA150	TG-S50
C117	.022 50V		CCD-103	CK-103	MGP01	TA110	TG-S10
C118	.022 50V		1DP-1-223		DPMS6S22	EWF1A122	1PB-S22
C119	.047 25V		1DP-1-223		DPMS6S22	EWF1A122	1PB-S22
C120	.01		CCD-503	CK-503	MGP05	TA150	TG-S50
C121	.001	3562-12	CCD-103	CK-103	MGP01	TA110	TG-S10
C122	.001	3562-12					
C123	22		CCTO-220	DTZ-22	NP022	CN0422	10TCC-Q22
C124	2			DTZ-2R2	NP02P2	CN0522	10TCC-V22
C125	.001		CCD-102	DD-102	GP1000	SM210	2SS-D10
C126	.01		CCD-103	CK-103	MGP01	TA110	TG-S10
C127	510 125V 10%		DM-19-511J	CPR-510J	CD15FD511J03	SX351	424ME5100J501
C128	.047 25V		CCD-503	CK-503	MGP05	TA150	TG-S50
C129	.047 25V		CCD-503	CK-503	MGP05	TA150	TG-S50
C130	5				NP05		10TCC-V50
VC	250	2930-12					

* Not normally in distributor's stock. Available thru distributor on order to manufacturer.

CONTROLS (All wattages 1/2 watt, or less, unless listed)

ITEM No.	FUNCTION	RESIST-ANCE	REPLACEMENT DATA				
			MFGR. PART No.	CENTRALAB PART No.	CLAROSTAT PART No.	CTS—IRC PART No.	MALLORY PART No.
RV1	Volume/Switch	10K	1543-11 (ERV-9)				
RV2	Squelch	10K	1542-11 (ERV-10)				
RV3	Squelch Range	10K	2474-13 (ERP-2)	TSV-10K (1) or T-10K (1)	C-103 (1)	X201R103B (1)	MTC14L1 (1)
RV4	Modulation Adjust	10K	2474-13 (ERP-2)	TSV-10K (1) or T-10K (1)	C-103 (1)	X201R103B (1)	MTC14L1 (1)
RV5	Meter Adjust	10K	2474-13 (ERP-2)	TSV-10K (1) or T-10K (1)	C-103 (1)	X201R103B (1)	MTC14L1 (1)
RV6	RF Meter Adjust	10K	2474-13 (ERP-2)	TSV-10K (1) or T-10K (1)	C-103 (1)	X201R103B (1)	MTC14L1 (1)

(1) Cut off one of the end terminals and bend to fit PC board.

RESISTORS (Power and Special)

ITEM No.	RATING	REPLACEMENT DATA	
		WORKMAN PART No.	MFGR. PART No.
PT4	100K (Cold)		2169-17
R66	1 WW		2473-13

ITEM No.	RATING	REPLACEMENT DATA	
		WORKMAN PART No.	MFGR. PART No.
R79	8.2 1W		2604-13
TH	30 (Cold)		2169-17

COILS (RF-IF)

ITEM No.	USE	REPLACEMENT DATA			
		PART No.	MEISSNER PART No.	MILLER PART No.	WORKMAN PART No.
L1	Local Osc	2218-23			
L2	Synthesizer Osc	2219-23			
L3	Synthesizer Mixer (Pri)	2223-23			
L4	Synthesizer Mixer (Sec)	2221-23			
L5	Synthesizer Mixer (Ter)	2222-23			
L6	Xmtr. Mixer (Pri)	2223-23			

PARTS LIST AND DESCRIPTION (CONTINUED)

(When ordering parts, state Model, Part Number, and Description.)

COILS (RF-IF)(cont)

ITEM No.	USE	REPLACEMENT DATA			
		PART No.	MEISSNER PART No.	MILLER PART No.	WORKMAN PART No.
L7	Xmtr. Mixer (Sec)	2223-23			
L8	Xmtr. Mixer (Ter)				
L9	Buffer Input	2224-23			
L10	Buffer	2225-23			
L11	Driver	2226-23			
L12	RF Filter (4 turns)	2227-23			
L13	RF Filter	2215-23			
L14	TVI Trap	2216-23			
L15	Ant. Matching	2228-23			
L16	Ant. Matching	2228-23			
L17	RF Amp	2229-23			
L18	Rec. Mixer (Pri)	1945-24			
L19	Rec. Mixer (Sec)	1946-24			
L20	Interstage IF	2036-24	16-9026	8517	
L21	Rec Osc	2230-23			
L22	Interstage IF	2037-24	16-9027	2067	
L23	Output IF	1949-24	16-9028	2068	
MF	Input IF	1950-24			
REC1	RF Choke (2.2uh)	2240-23	19-1002	74F226AP	T812
RFC2	RF Choke (2.2uh)	2240-23	19-1002	74F226AP	T812
RFC3	RF Choke (2.2uh)	2240-23	19-1002	74F226AP	T812
RFC5	RF Choke (1.1uh)	2217-23	19-2009	74F126AP	T807

FILTER CHOKE

ITEM No.	RATINGS			REPLACEMENT DATA				NOTES
	CURRENT (Measured)	DC RES.	INDUCTANCE (0 CURRENT 1000~)	MFGR. PART No.	STANCOR PART No.	THORDARSON PART No.	TRIAD PART No.	
CH	1200ma	.1	210uh	1090-15 (ELA-2)				

TRANSFORMER (Driver)

ITEM No.	TURNS RATIO			REPLACEMENT DATA				NOTES
	PRI.	SEC. 1	SEC. 2	MFGR. PART No.	STANCOR PART No.	THORDARSON PART No.	TRIAD Part No.	
T1	2	1CT		1071-15 (ETA-3)				

TRANSFORMER (Audio Output)

ITEM No.	IMPEDANCE		REPLACEMENT DATA				NOTES
	PRI. 1	SEC. 1	MFGR. PART No.	STANCOR PART No.	THORDARSON PART No.	TRIAD PART No.	
T2	56 CT	16	1072-15 (ETA-4)				
		SEC.2					
		DC Resistance .5 Tapped @ .1					

SPEAKER

ITEM No.	TYPE	REPLACEMENT DATA		NOTES
		MFGR. PART No.	QUAM PART No.	
SP1	3" x 5" PM 16 ohms	1203-36	35A05Z16	

PARTS LIST AND DESCRIPTION (CONTINUED)

(When ordering parts, state Model, Part Number, and Description.)

FUSE DEVICES

ITEM No.	DESCRIPTION	REPLACEMENT DATA						
		PART No.		BUSS PART No.		LITTELFUSE PART No.		WORKMAN PART No.
		DEVICE	HOLDER	DEVICE	HOLDER	DEVICE	HOLDER	DEVICE
F1	1.5A Quick-acting			AGC 1 1/2	HDJ	31201.5	150145	

MISCELLANEOUS

ITEM No.	PART NAME	PART No.	NOTES
M2	Meter	1175-27	
RY	Relay	1052-37	Coil Resistance 390 ohms
S1	Switch	1248-14	Channel Selector
S2	Switch	1762-14	Fine Tuning
S3	Switch	1733-14	Burglar Alarm
X1	Crystal	1100-35	23.290MHz
X2	Crystal	1099-35	23.340MHz
X3	Crystal	1098-35	23.390MHz
X4	Crystal	1101-35	23.440MHz
X5	Crystal	1102-35	23.490MHz
X6	Crystal	1103-35	23.540MHz
X7	Crystal	1105-35	14.950MHz
X8	Crystal	1106.35	14.960MHz
X9	Crystal	1104.35	14.970MHz
X10	Crystal	1107-35	14.990MHz
X11	Crystal	1096-35	11.275MHz
X12	Crystal	1097-35	11.730MHz
	Printed Circuit Board	1501-16	EPO-506; Oscillator
	Printed Circuit Board	1502-16	EPO-507; Synthesizer
	Printed Circuit Board	1587-16	EPO-508B; Main

CABINETS & CABINET PARTS (When ordering specify model, chassis & color)

ITEM	PART No.
Escutcheon	7852-10
Chassis	7853-10
Cover, Top	2254-10
Cover, Bottom	7854-10
Knob, Volume, Squelch, Fine Tuning	1844-18

ITEM	PART No.
Knob, Channel Selector	1843-18
Dial, Channel Selector	4432-20
Mobile Mounting Bracket	2259-10
Microphone Holder	2260-10

ACCESSORIES

ITEM	MFGR. PART No.	REMARKS
Microphone	1010-34	
DC power Cord	1209-38	

WIRING DATA

General-use Hook-up Wire ..... Use BELDEN No. 8530 (Solid) Available in 12 Colors
8524 (Stranded) Available in 12 Colors
Shielded Antenna Lead ..... Use BELDEN No. 8214 Lowest-loss (RG-8/U Type)
8237 Low-loss (RG-8/U)
8240 (Solid) Miniature (RG-58/U)
8259 (Stranded) Miniature (RG-58A/U)
Coiled Microphone Cable ..... Use BELDEN No. 8497 3-Conductor,1 Shielded,for Press-to-Talk (Neoprene)
8496 3-Conductor,1 Shielded,for Press-to-Talk (Vinyl)
Ignition Noise Suppression ..... Use BELDEN No. 7300-Series Spark-Plug Sets
Bonding Strap ..... Use BELDEN No. 8661 (3/8 In.)

NOTE

ONLY THOSE PERSONS PROPERLY LICENSED ARE PERMITTED TO MAKE REPAIRS OR ADJUSTMENTS WHICH MAY RESULT IN ILLEGAL OPERATION. (REFER TO FCC RULES AND REGULATIONS PART 95, SUBPARTS C & D.)

The frequency of the transmitter should be checked periodically with a secondary frequency standard to insure proper and legal operation.

Best results will be obtained when adjusting the final RF output circuit if the antenna normally used is connected and the chassis is as nearly in the cabinet as possible.

Connect either 50-ohm dummy load or the normally used antenna system.

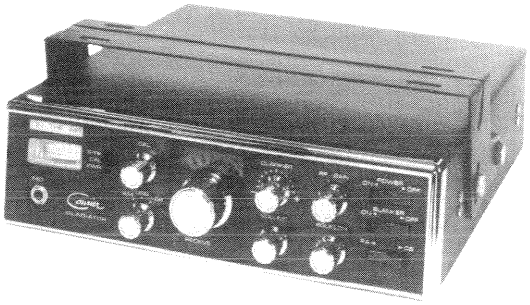

MODEL Gladiator

ALIGNMENT

Suggested Alignment Tools: GC ELECTRONICS
T1 thru T12, T16 thru T21 ..... #9440
T13, T14, T15, L1, L12, L14, L15 ..... #9087, 9089

SYNTHESIZER ALIGNMENT

SYNTHESIZER ALIGNMENT

Note: Trimmer capacitors should not require adjustment unless an oscillator circuit component has been replaced.

INDICATOR	ADJUST	REMARKS
11MHz Oscillator Connect a frequency counter to oscillator output, high side to TP2, low side to TP1 (ground.).		Set Clarifier to center position. Set mode switch to AM.
	CT2	Select Channel 1. Adjust for 11.000MHz (±25Hz)
	CT3	Select Channel 5. Adjust for 11.050MHz (±25Hz)
	CT4	Select Channel 9. Adjust for 11.000MHz (±25Hz)
	CT5	Select Channel 13. Adjust for 11.150MHz (±25Hz)
	CT6	Select Channel 17. Adjust for 11.200MHz (±25Hz)
	CT7	Select Channel 21. Adjust for 11.250MHz (±25Hz)
8MHz Oscillator, USB. Connect a frequency counter to oscillator output, high side to TP3, low side to TP1 (ground.).		Set mode switch to USB.
	CT8	Select Channel 1. Adjust for 8.1665MHz (±5Hz)
	CT9	Select Channel 2. Adjust for 8.1765MHz (±5Hz)
	CT10	Select Channel 3. Adjust for 8.1865MHz (±5Hz)
	CT11	Select Channel 4. Adjust for 8.2065MHz (±5Hz)

HOWARD W. SAMS & CO., INC. Indianapolis, Indiana 46206

SYNTHESIZER ALIGNMENT (CONTINUED)

INDICATOR	ADJUST	REMARKS
8MHz Oscillator, LSB. Connect a frequency counter to oscillator output, high side to TP3, low side to TP1 (ground.).	CT12 CT13 CT14 CT15	Set mode switch to LSB. Select Channel 1. Adjust for 8.1635MHz(±5Hz) Select Channel 2. Adjust for 8.1735MHz(±5Hz) Select Channel 3. Adjust for 8.1835MHz(±5Hz) Select Channel 4. Adjust for 8.2035MHz(±5Hz)
Mixer Connect an RF VTVM to synthesizer output, high side to TP4, low side to TP5 (ground.).	T4, T5, T6, T7, T8	Set mode switch to USB. Adjust for maximum; reading should be approximately 300MV.
SSB Oscillator Connect frequency counter to oscillator output, high side to TP8, low side to TP9 (ground.).	CT17 CT18	Select Mode USB. Adjust for 7.7985MHz(0 to-5Hz) Select Mode LSB. Adjust for 7.8015MHz(0 to-5Hz)
Connect an RF VTVM to oscillator output, high side to TP8, low side to TP9 (ground.).	T16	Adjust for maximum; reading should be approximately 300MV.
AM Oscillator Connect frequency counter to oscillator output, high side to TP7, low side to TP9 (ground).	CT16	Set mode switch to AM. Select for 7.3435MHz(±5Hz)

RECEIVER ALIGNMENT

Connect an AC VTVM across speaker voice coil. Set RF GAIN control fully clockwise, SQUELCH control fully counterclockwise. Adjust VOLUME control for suitable reading.

SIGNAL GENERATOR	CHANNEL	ADJUST	REMARKS
IF-RF Alignment Connect high side thru .01mfd to base of TR12 (AM 2nd Mixer), low side to chassis. Set to 455KHz. (Mod.)	Any	T13, T14, T15	Set mode switch to AM. Adjust for maximum.
Connect high side thru .01mfd to antenna connector, low side to chassis. Set to 27.085MHz. (Mod.)	11	T12, T9, T3, T2, T1	Adjust for maximum.
As above, except set frequency to 27.086MHz. (Unmod).	11	T10, T11	Set mode switch to USB. Adjust for maximum.
Sensitivity Adjustment Connect high side thru .01mfd to antenna connector, low side to chassis. Set to 27.085MHz, 30% modulation, output level .5uv.	11	VR3, VR5	Set mode switch to AM. Set VOLUME control fully clockwise. Adjust for an AC VTVM reading of 2 volts or more.
As above, except Set to 27.086MHz, (unmod.) output level .25uv.	11	VR1	Set mode switch to USB. Adjust for an AC VTVM reading of 2 volts or more.

RECEIVER ALIGNMENT(CONTINUED)

SIGNAL GENERATOR	CHANNEL	ADJUST	REMARKS
S-Meter Calibration Connect high side thru .01mfd to antenna connector, low side to chassis. Set to 27.085MHz. (Unmod). Set output level to 150uv.	11	VR2	Set mode switch to AM. Set meter switch in S-RF position. Adjust for reading of 9 on S-RF meter.
As above, except set frequency to 27.086MHz.	11	VR11	Set mode switch to USB. Adjust for reading of 9 on S-RF meter.
Squelch Adjustment Connect high side thru .01mfd to antenna connector, low side to chassis. Set to 27.085MHz. (Mod.) Set output level to 500uv.	11	VR9	Set mode switch to AM. Set SQUELCH control fully clockwise. Adjust VR9 to point where squelch just opens.
As above, except set to 27.086MHz. (Unmod.)	11	VR6	Set mode switch to USB. Adjust VR6 to point where squelch just opens.

TRANSMITTER ALIGNMENT

INDICATOR	ADJUST	REMARKS
Connect an RF wattmeter between antenna connector and dummy load.	T18, T19, T20, T21, L12, L14, CT20	Set mode switch to AM. Key transmitter and adjust for maximum.
Same as above. Connect a 0-500ma DC ammeter in the collector circuit of TR31 (Final Amp) at point TP.	VR17	Adjust for 5 watts input.
Modulation Adjustment Connect a modulation monitor between antenna connector and dummy load.	VR14	Set mode switch to AM. Key transmitter and adjust to limit modulation to 100% with normal voice level.
SSB Balanced Modulator Adjustment Connect an RF wattmeter between antenna connector and dummy load; or connect vertical input of oscilloscope (usable at 27MHz) across dummy load.	VR13, CT19	Set mode switch to LSB. Remove microphone plug from microphone jack and key transmitter by shorting pin 1 of microphone jack to ground. Adjust for MINIMUM RF output.
SSB Linearity Adjustments Connect vertical input of an oscilloscope (usable at 27MHz) across dummy load. Connect two audio oscillators to microphone input high sides to pin 2, low sides to ground. Set generator frequencies to 900 and 1900Hz. Adjust output levels for 100% modulation indicated on oscilloscope and 5mv. measured at microphone connector pin 2.	VR15,	Set mode switch to LSB. Key transmitter and adjust VR18 and L15 for maximum output with MINIMUM distortion; adjust VR15 for RF output of approximately 64 volts peak-to-peak as measured across 50 ohm dummy load.
RF Meter Adjustment Connect an RF wattmeter between antenna connector and dummy load.	VR20	Set mode switch to AM. Adjust for meter reading indicating correct RF power output.
TVI Adjustment TV (Ch. 2)	L1	Adjust for MINIMUM interference.

A Howard W. Sams CIRCUITRACE® Photo

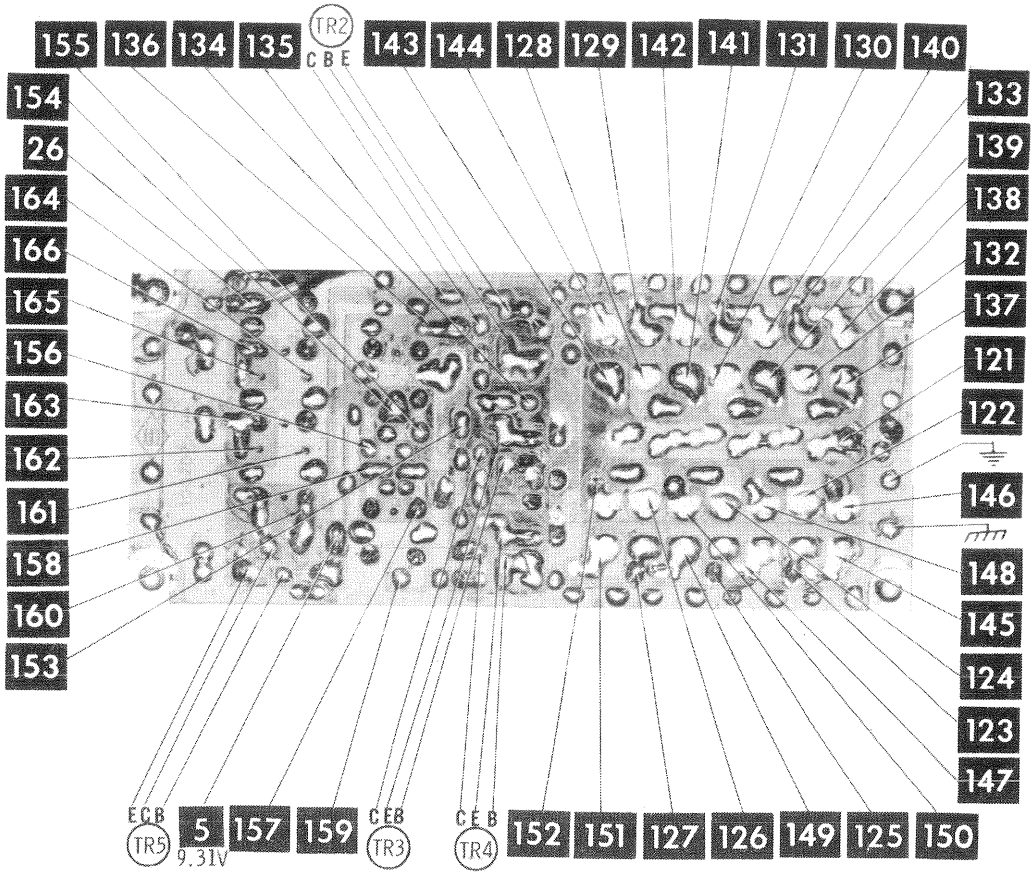

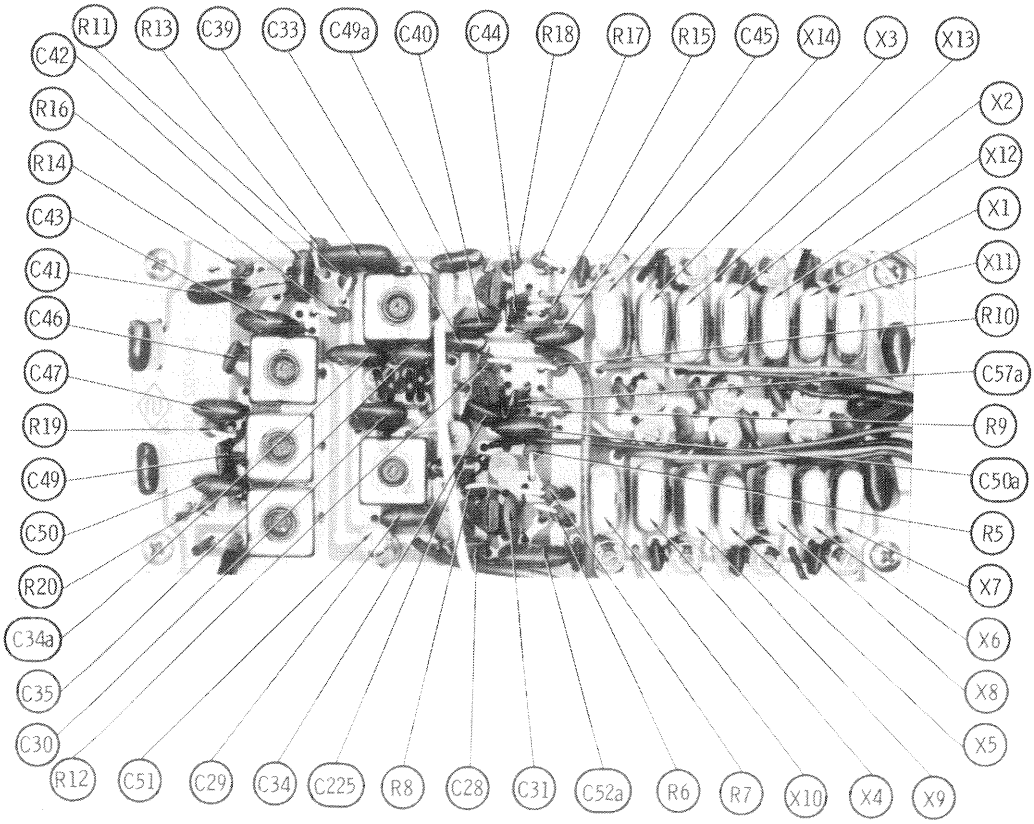

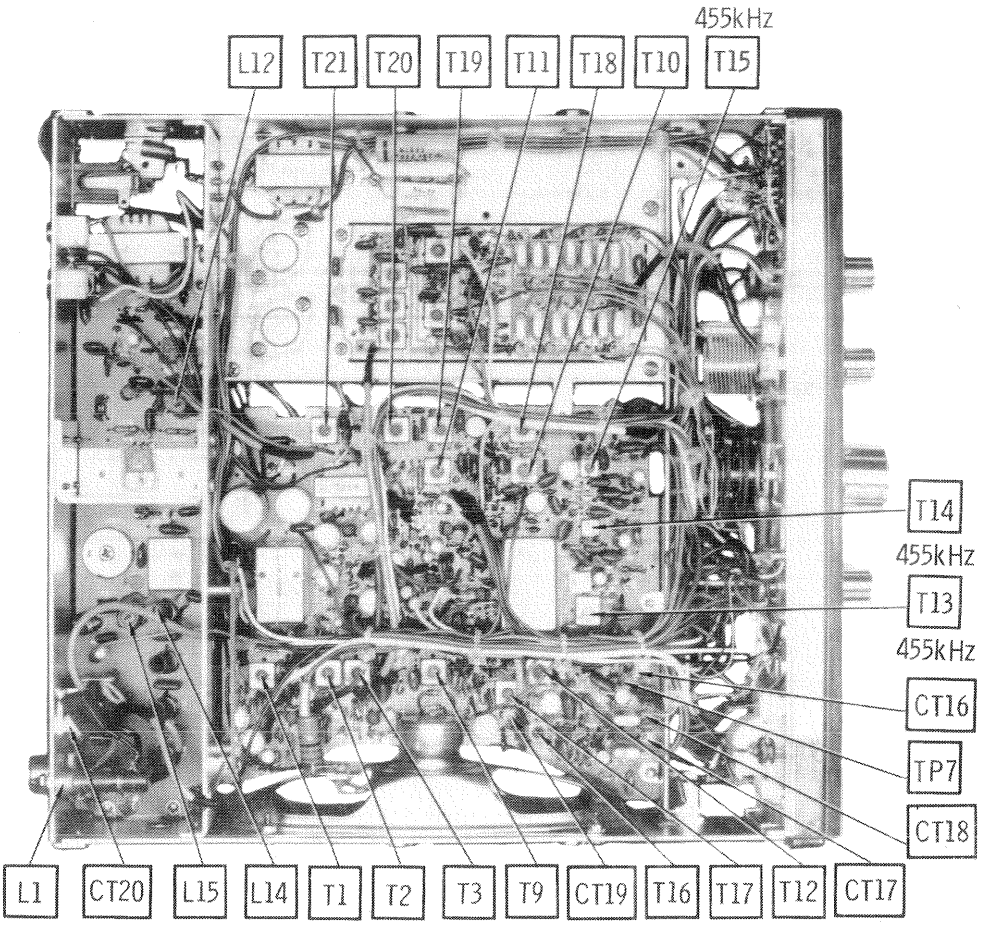
455kHz
L12
T21
T20
T19
T11
T18
T10
T15
T14
455kHz
T13
455kHz
CT16
TP7
CT18
L1
CT20
L15
L14
T1
T2
T3
T9
CT19
T16
T17
T12
CT17

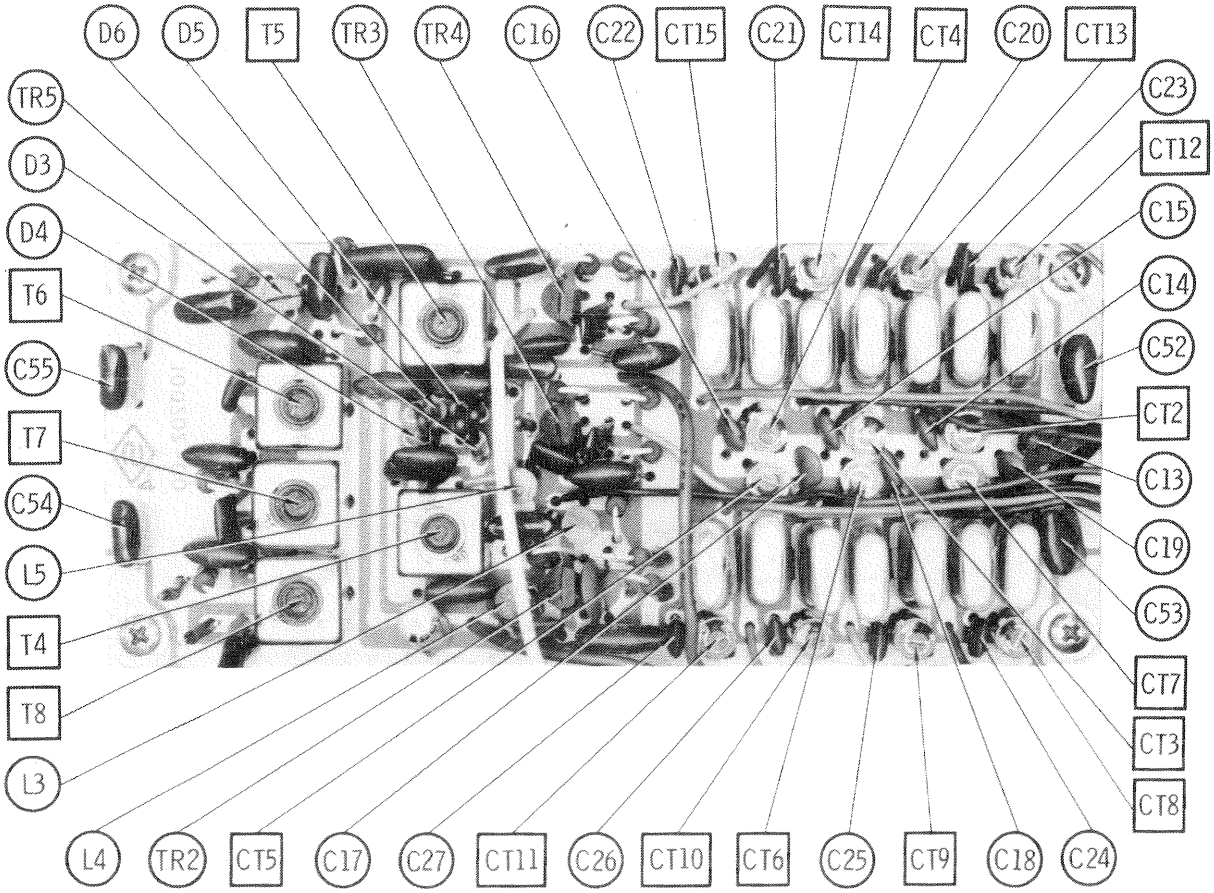
D6
D5
T5
TR3
TR4
C16
C22
CT15
C21
CT14
CT4
C20
CT13
TR5
D3
D4
T6
C55
T7
C54
L5
T4
T8
L3
C23
CT12
C15
C14
C52
CT2
C13
C19
C53
CT7
CT3
CT8
L4
TR2
CT5
C17
C27
CT11
C26
CT10
CT6
C25
CT9
C18
C24

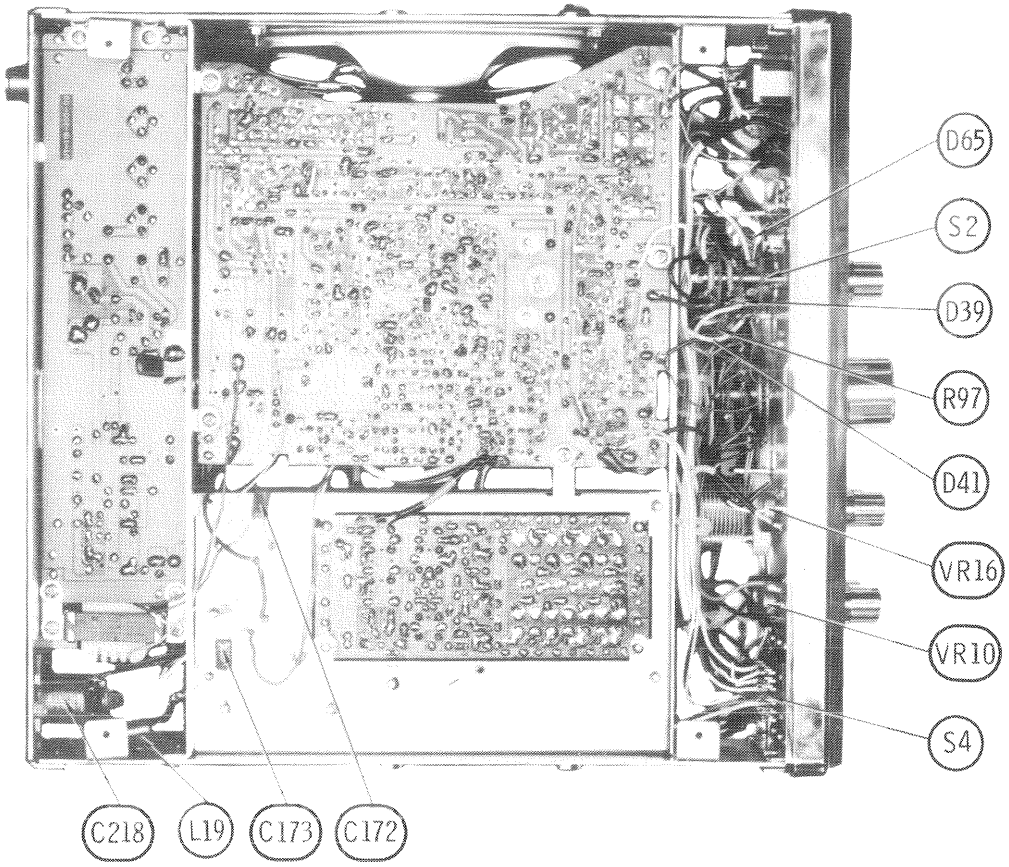
D65
S2
D39
R97
D41
VR16
VR10
S4
C218
L19
C173
C172

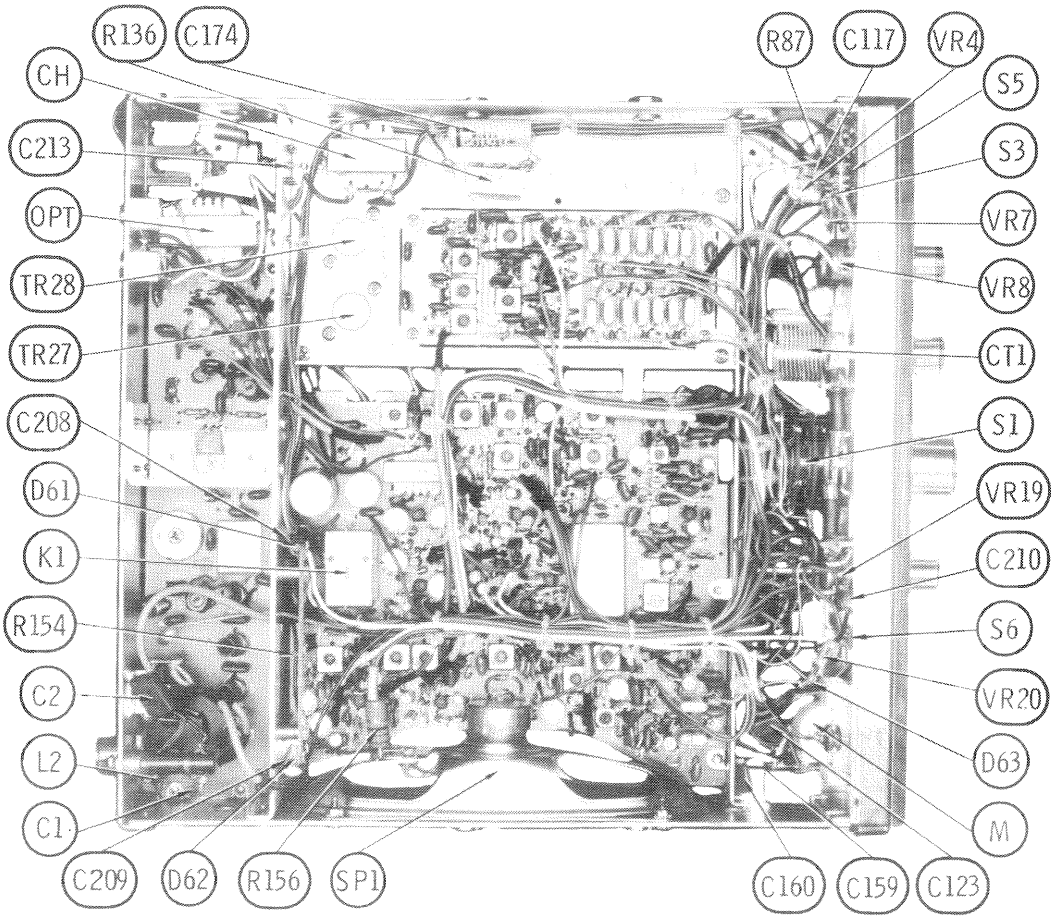
R136
C174
CH
C213
OPT
TR28
TR27
C208
D61
K1
R154
C2
L2
C1
C209
D62
R156
SP1
R87
C117
VR4
S5
S3
VR7
VR8
CT1
S1
VR19
C210
S6
VR20
D63
M
C160
C159
C123

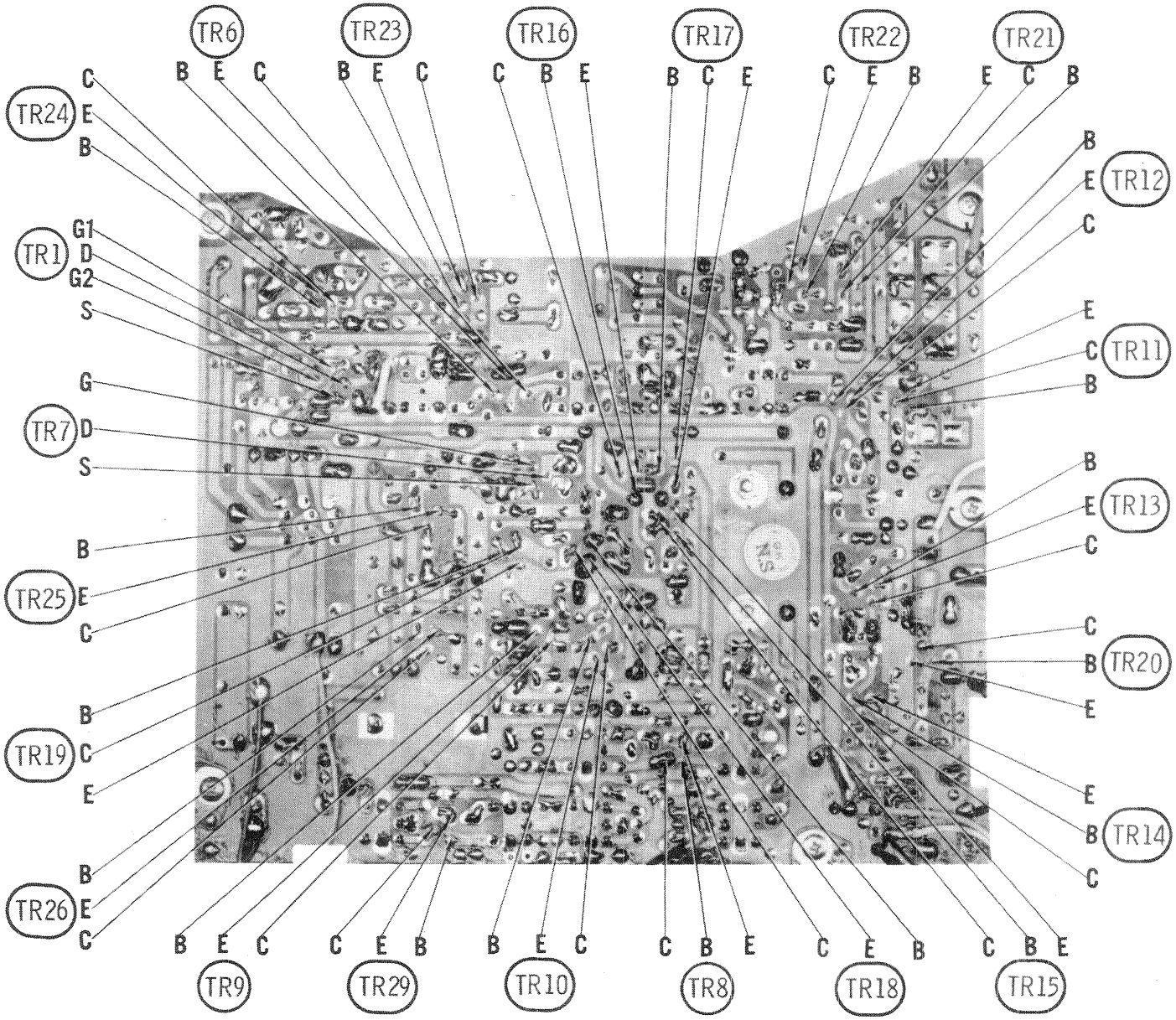

A Howard W. Sams CIRCUITRACE Photo

COURIER MODEL GLADIATOR

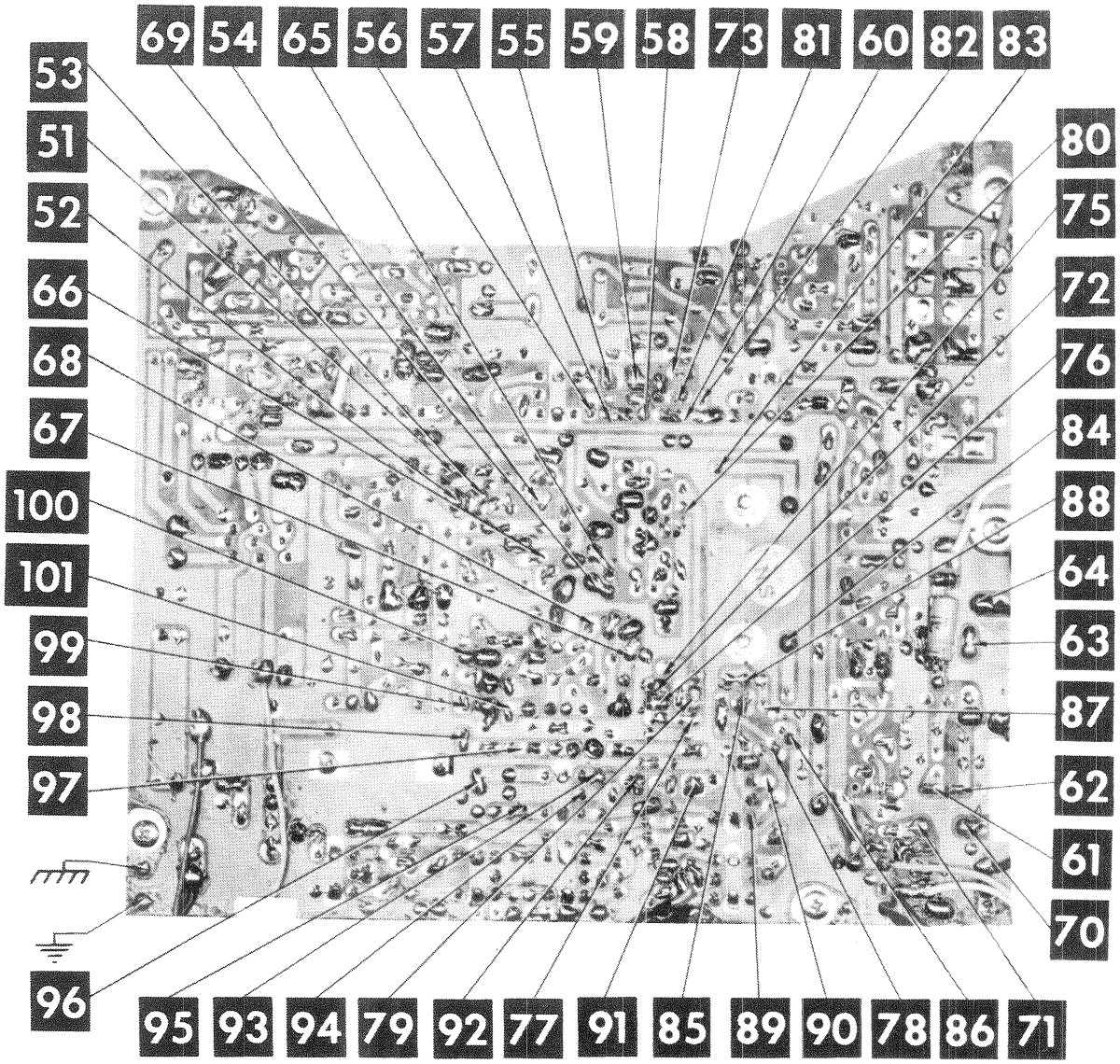

A Howard W. Sams CIRCUITRACE® Photo

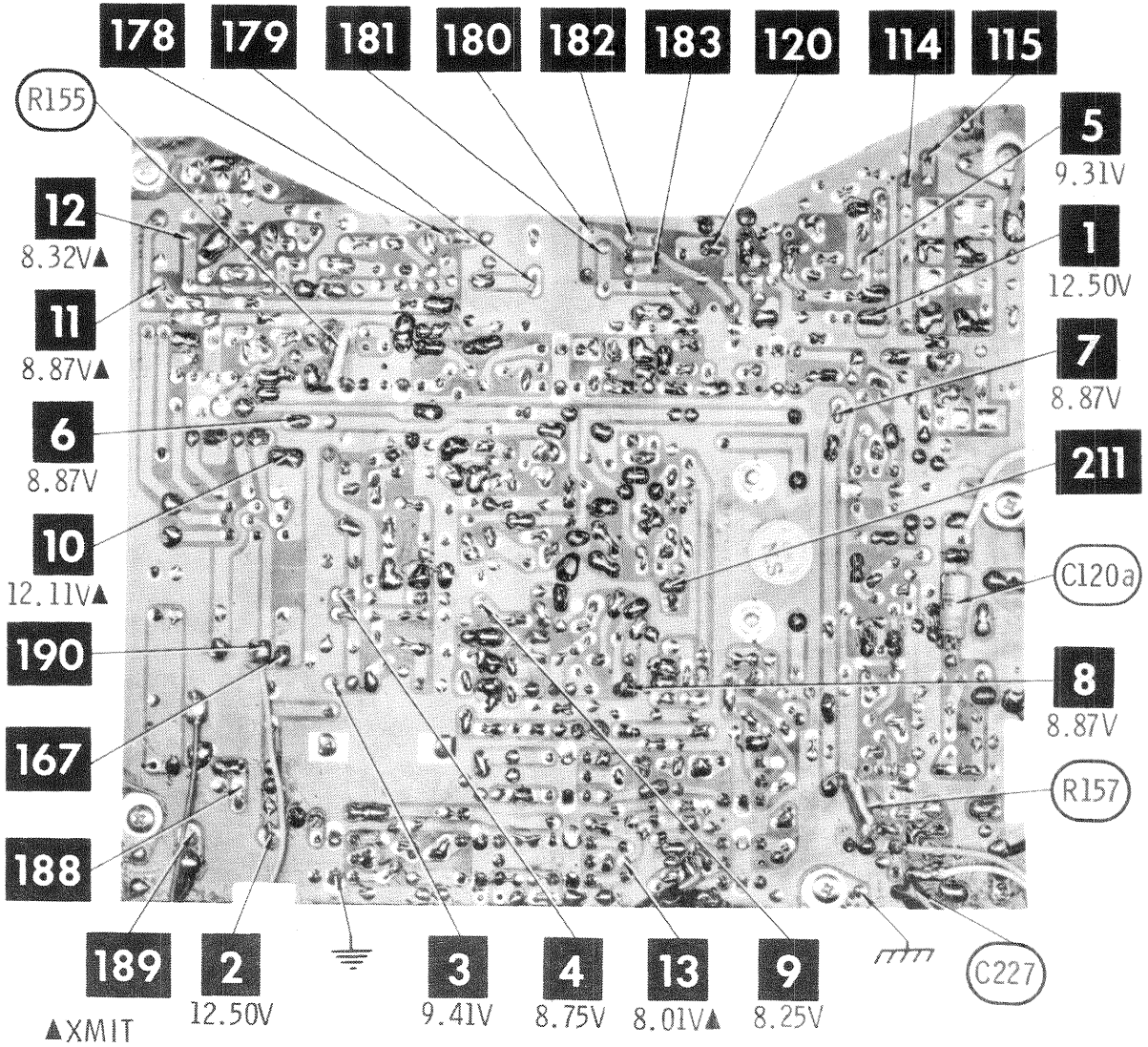

A Howard W. Sams CIRCUITRACE Photo

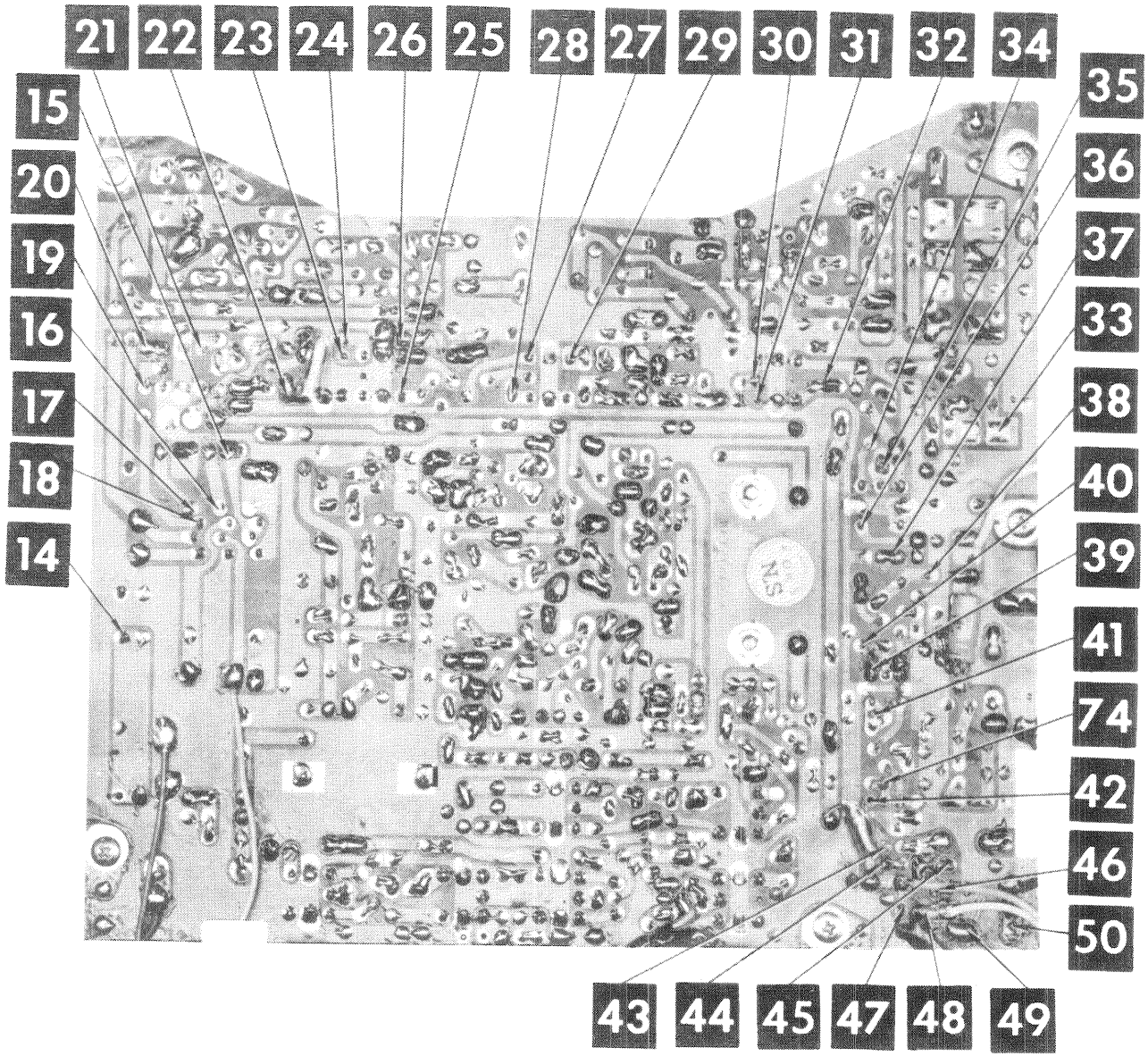

A Howard W. Sams CIRCUITRACE® Photo

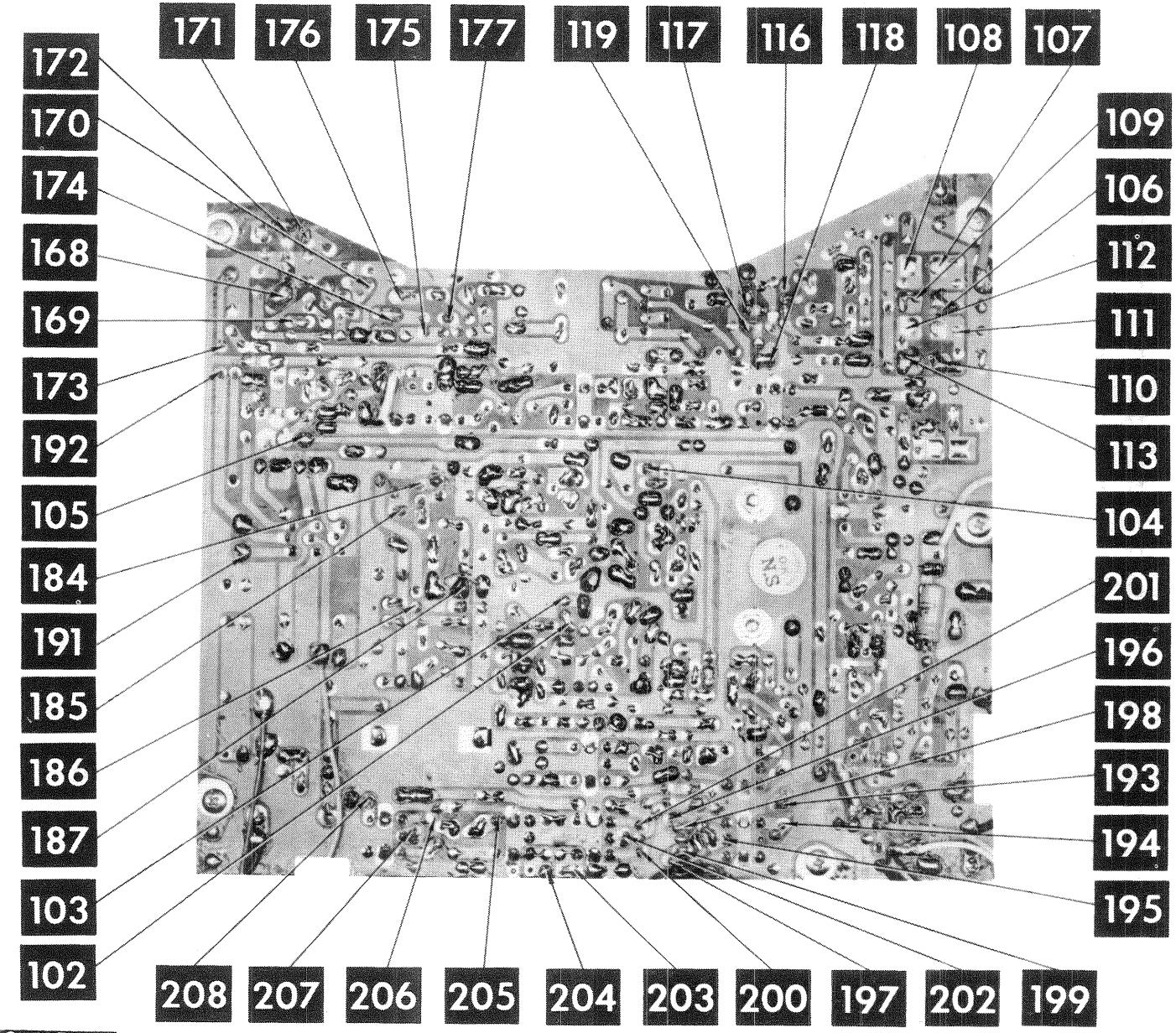

A Howard W. Sams CIRCUITRACE® Photo

COURIER MODEL GLADIATOR

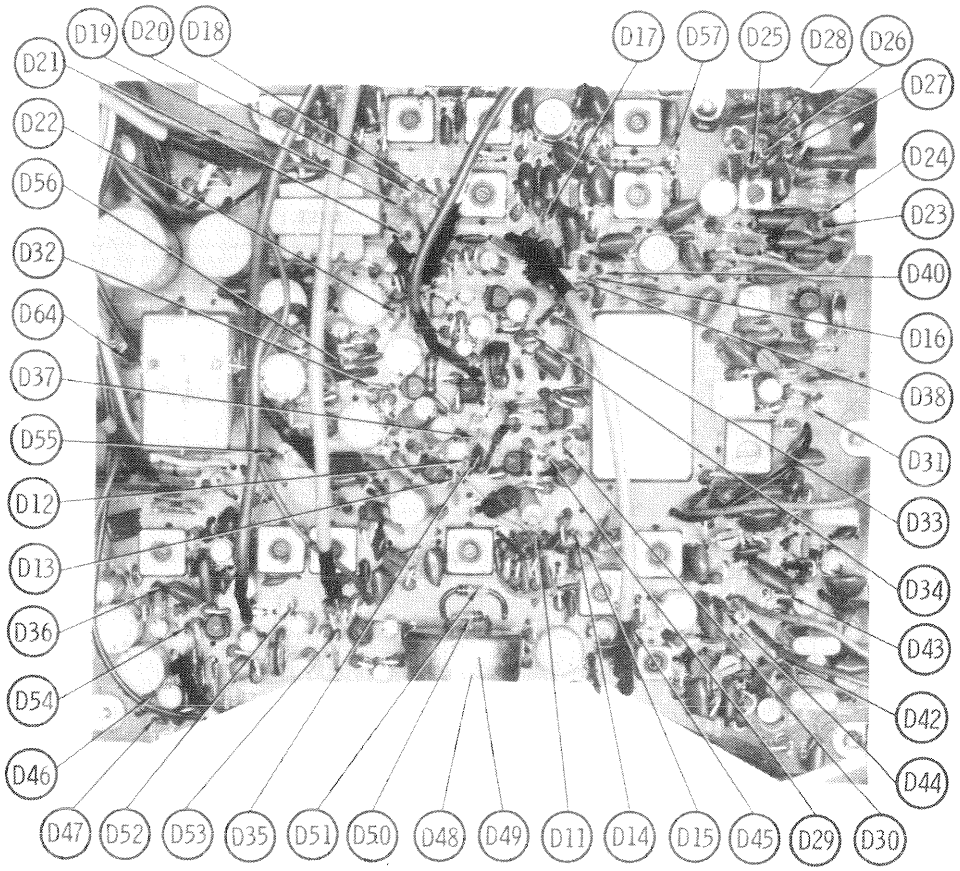
D19
D20
D18
D17
D57
D25
D28
D26
D21
D27
D22
D24
D56
D23
D32
D40
D64
D16
D37
D38
D55
D31
D12
D33
D13
D34
D36
D43
D54
D42
D46
D44
D47
D52
D53
D35
D51
D50
D48
D49
D11
D14
D15
D45
D29
D30

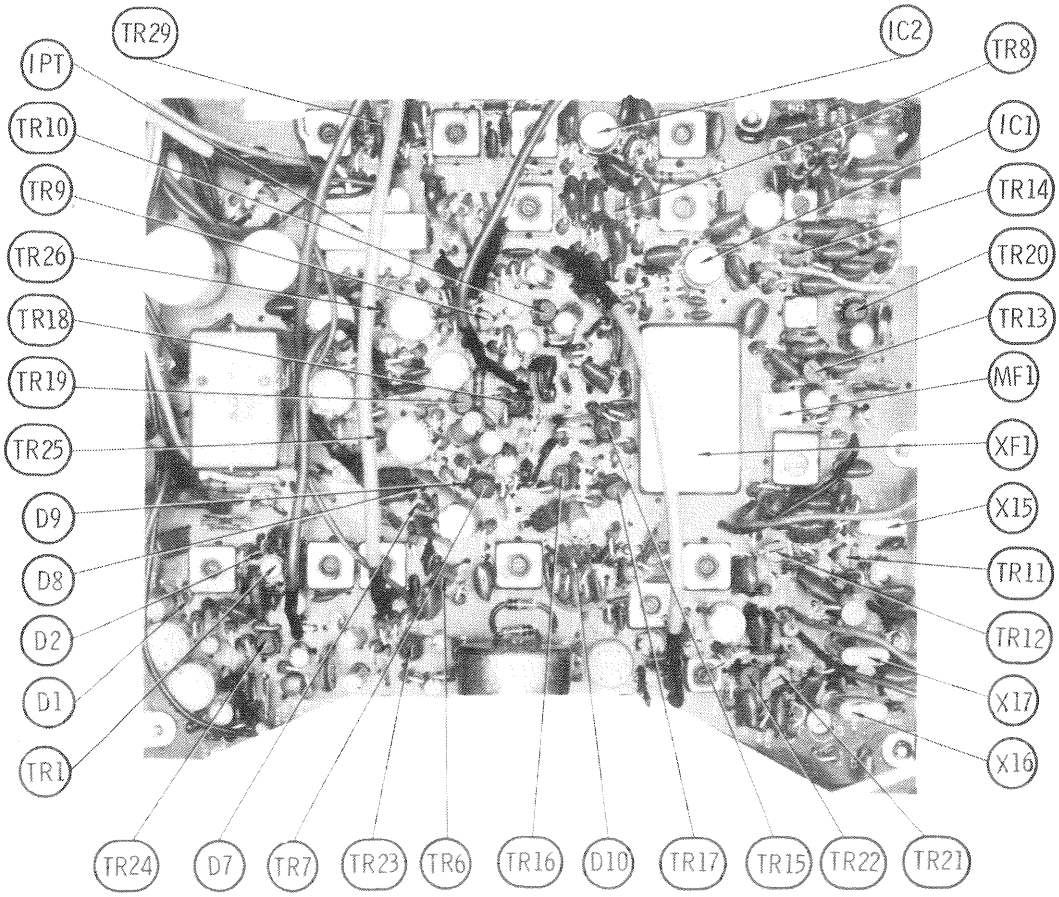
TR29
IC2
TR8
IPT
TR10
IC1
TR9
TR14
TR26
TR20
TR18
TR13
TR19
MF1
TR25
XF1
D9
X15
D8
TR11
D2
TR12
D1
X17
TR1
X16
TR24
D7
TR7
TR23
TR6
TR16
D10
TR17
TR15
TR22
TR21

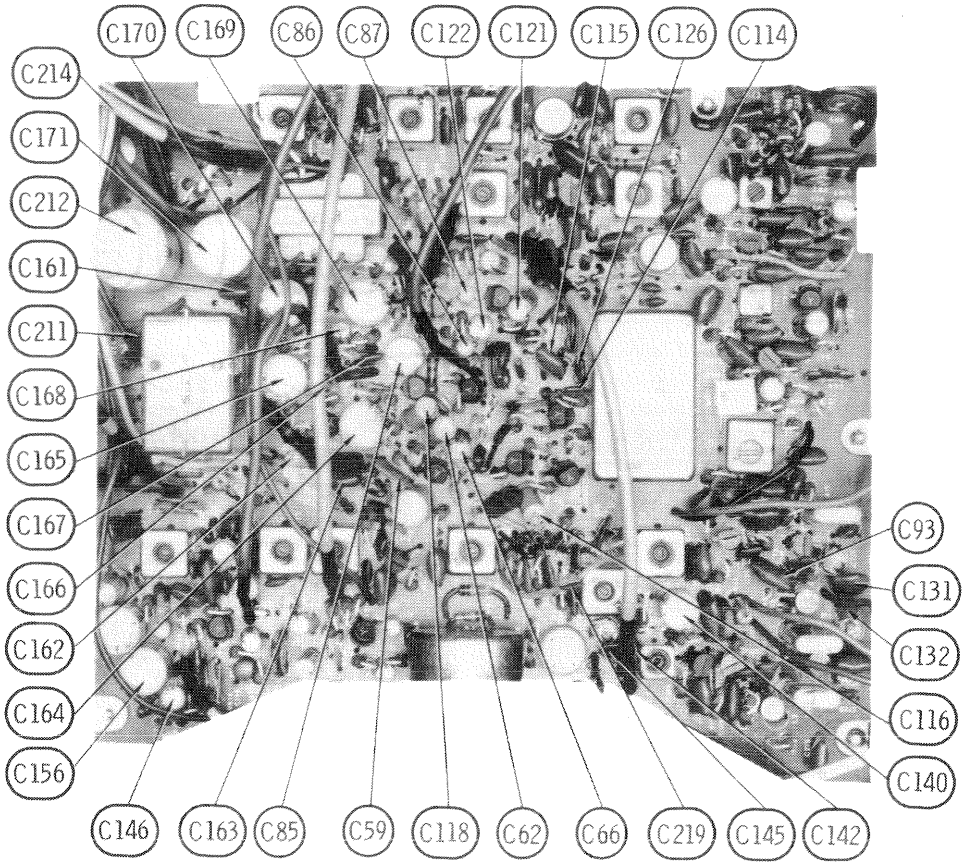
C170
C169
C86
C87
C122
C121
C115
C126
C114
C214
C171
C212
C161
C211
C168
C165
C167
C166
C162
C164
C156
C93
C131
C132
C116
C140
C146
C163
C85
C59
C118
C62
C66
C219
C145
C142

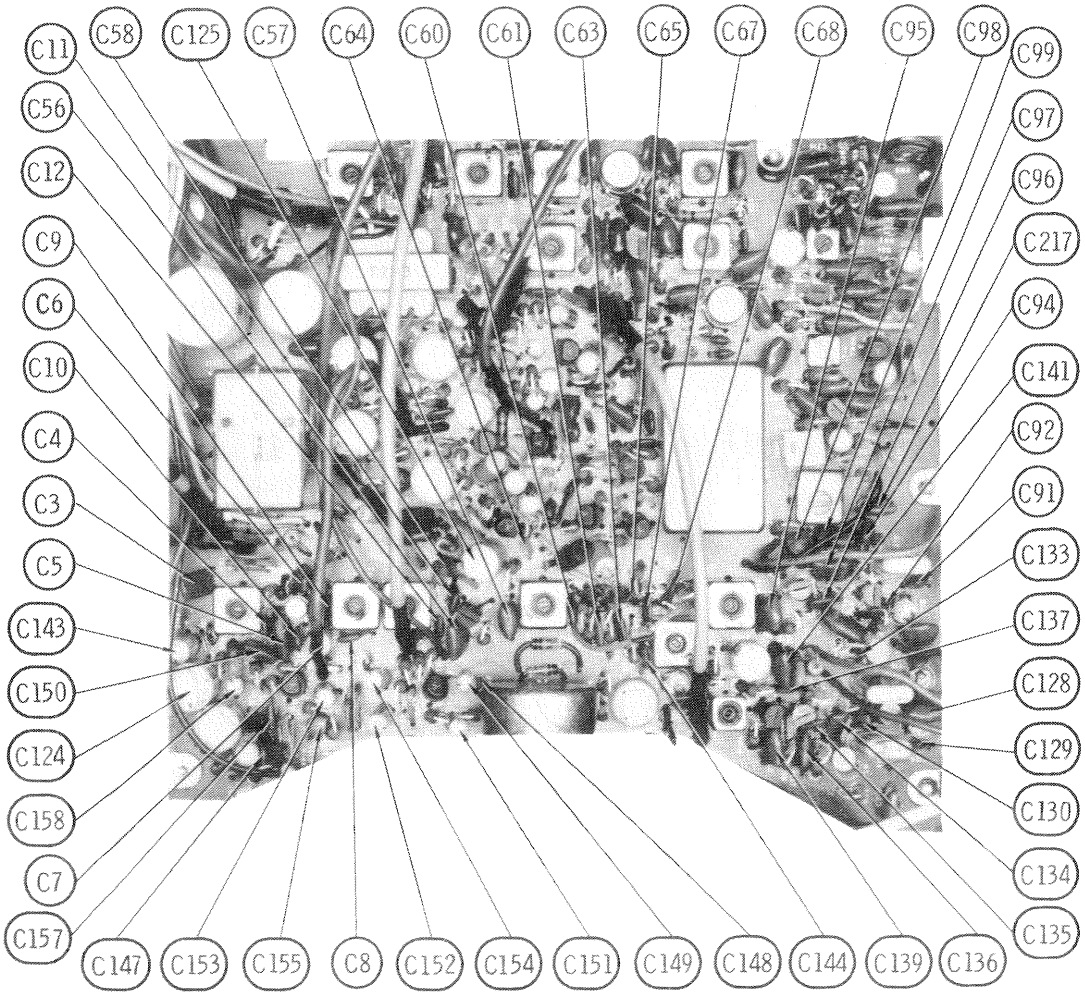
C11
C58
C125
C57
C64
C60
C61
C63
C65
C67
C68
C95
C98
C99
C56
C97
C12
C96
C9
C217
C6
C94
C10
C141
C4
C92
C3
C91
C5
C133
C143
C137
C150
C128
C124
C129
C158
C130
C7
C134
C157
C135
C147
C153
C155
C8
C152
C154
C151
C149
C148
C144
C139
C136

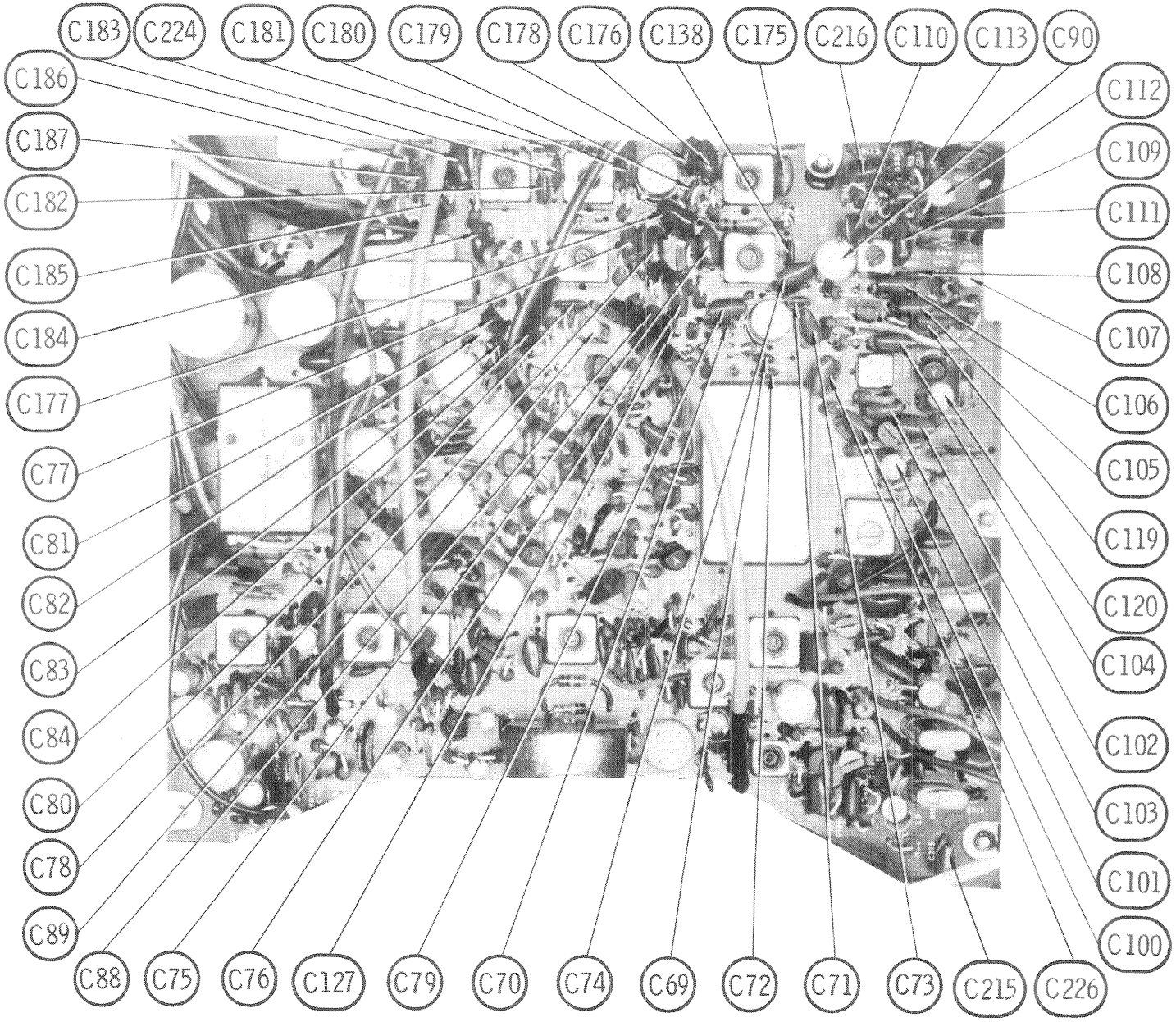
C183
C224
C181
C180
C179
C178
C176
C138
C175
C216
C110
C113
C90
C186
C187
C182
C185
C184
C177
C77
C81
C82
C83
C84
C80
C78
C89
C88
C75
C76
C127
C79
C70
C74
C69
C72
C71
C73
C215
C226
C112
C109
C111
C108
C107
C106
C105
C119
C120
C104
C102
C103
C101
C100

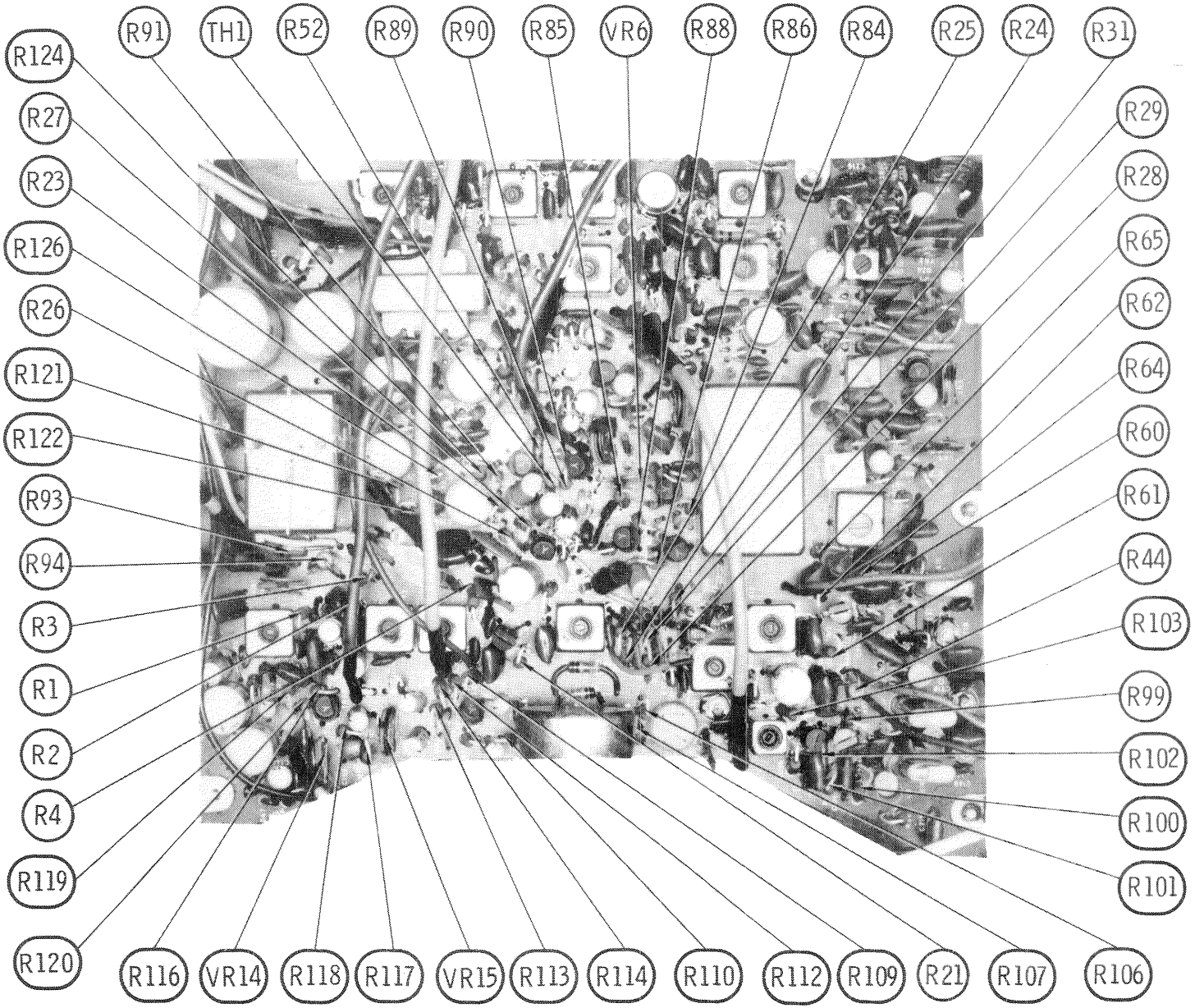

COURIER MODEL GLADIATOR

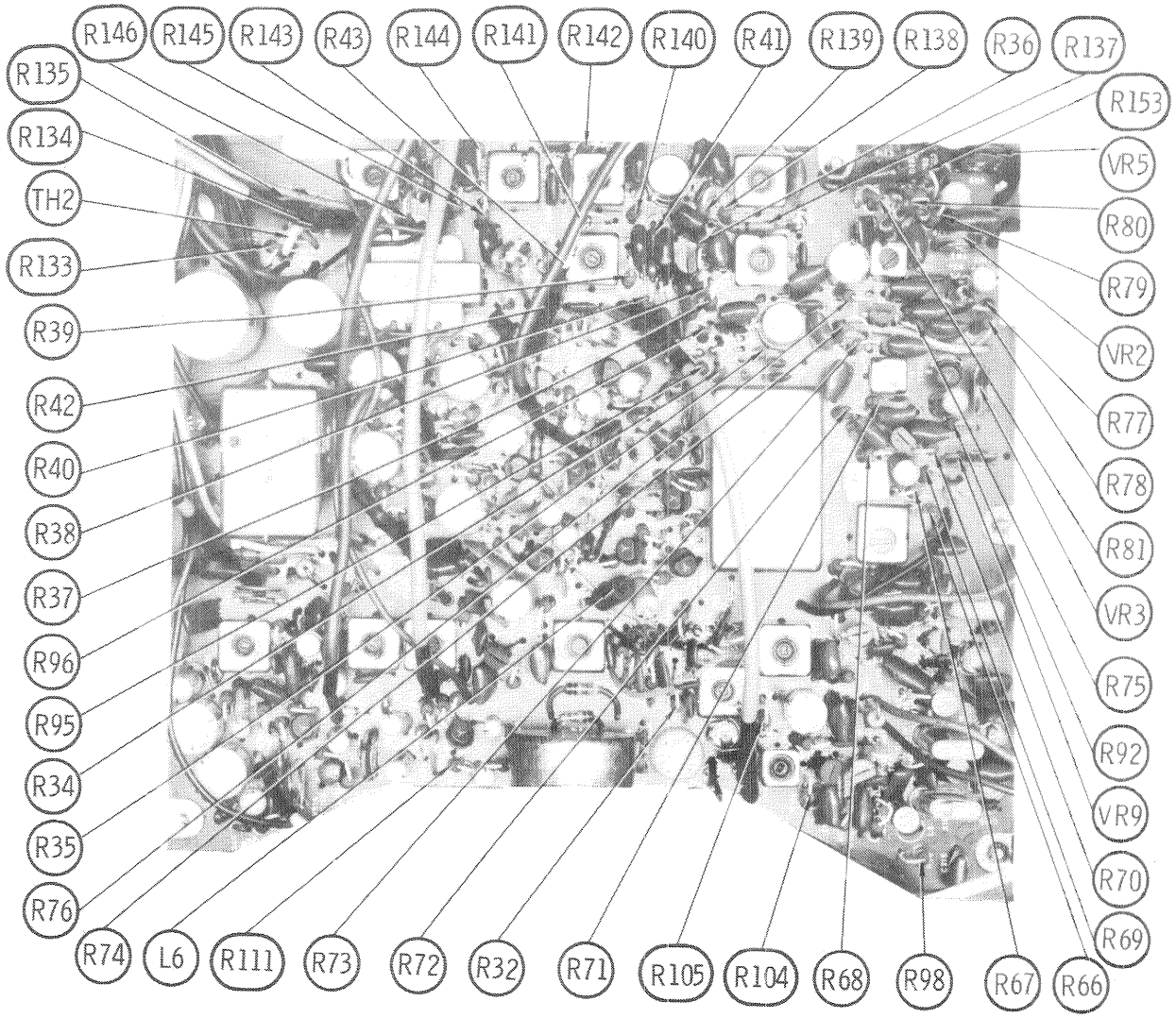
R146
R145
R143
R43
R144
R141
R142
R140
R41
R139
R138
R36
R137
R135
R134
TH2
R133
R39
R42
R40
R38
R37
R96
R95
R34
R35
R76
R74
L6
R111
R73
R72
R32
R71
R105
R104
R68
R98
R67
R66
R153
VR5
R80
R79
VR2
R77
R78
R81
VR3
R75
R92
VR9
R70
R69

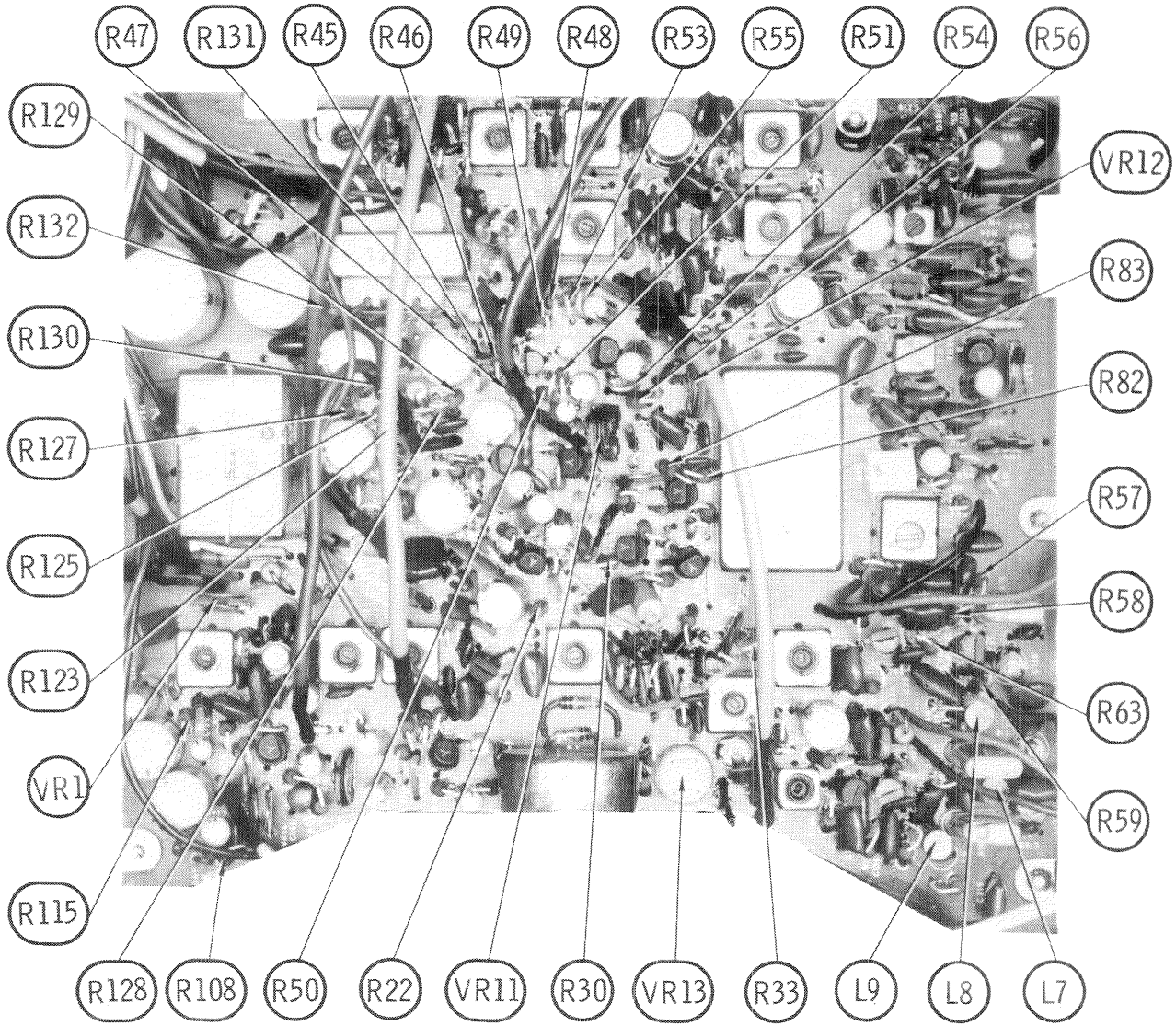
R47
R131
R45
R46
R49
R48
R53
R55
R51
R54
R56
R129
R132
R130
R127
R125
R123
VR1
R115
R128
R108
R50
R22
VR11
R30
VR13
R33
L9
L8
L7
VR12
R83
R82
R57
R58
R63
R59

A Howard W. Sams CIRCUITRACE® Photo

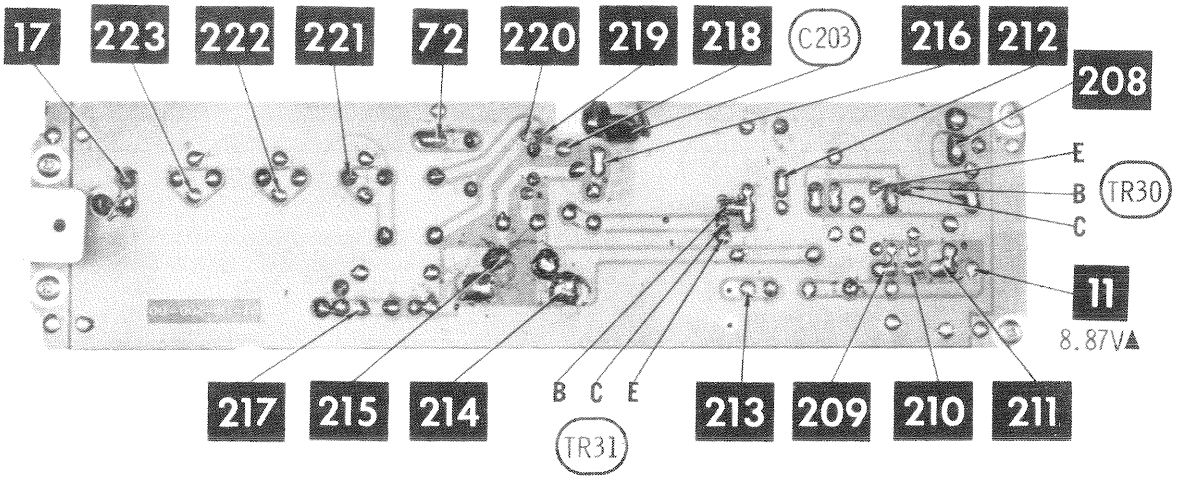

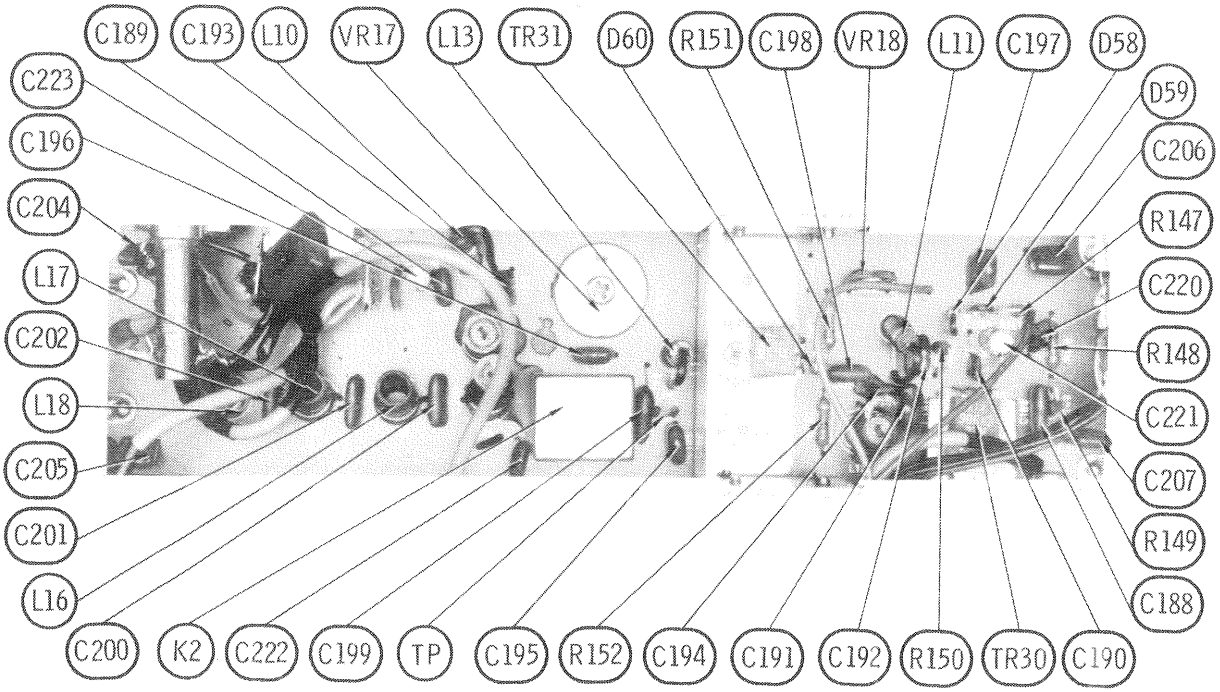

PARTS LIST AND DESCRIPTION

(When ordering parts, state Model, Part Number, and Description.)

SEMICONDUCTORS

ITEM No.	TYPE / MFGR. No./PART No.	REPLACEMENT DATA						
		GENERAL ELECTRIC PART No.	INTERNATIONAL RECTIFIER PART No.	MALLORY PART No.	MOTOROLA PART No.	RCA PART No.	SPRAGUE PART No.	SYLVANIA PART No.
D1	1N4448/1042-16	GE-300	D200	PTC214	HEPR0600	SK3100	RT218	ECG 177
	1N60(P)/1042-13	1N60	1N60	PTC206	HEP135	SK3088		ECG 109
D2	ZE-1.5/1042-20 1.52V Zener							
D3	1N60/1042-12	1N60 (12)	1N60 (12)	PTC206 (12)	HEP135 (12)	SK3088 (12)		ECG 109 (12)
D4	1N60/1042-12							
D5	1N60/1042-12							
D6	1N60/1042-12							
D7	1N60/1042-12	1N60	1N60	PTC206	HEP135	SK3088		ECG 109
D8	1N60/1042-12	1N60	1N60	PTC206	HEP135	SK3088		ECG 109
D9	1N4448/1042-16	GE-300	D200	PTC214	HEPR0600	SK3100	RT218	ECG 177
D10	1S1007/1042-14	GE-300 (7)	D200MP (6)	PTC215 (6)	HEPR0600(7)	SK3100 (7)	RT218 (7)	ECG 178MP(6)
D11	1S1007/1042-14							
D12	1S2473/1042-15	GE-300 (7)	D200MP (6)	PTC215 (6)	HEPR0600(7)	SK3100 (7)	RT218 (7)	ECG 178MP(6)
D13	1S2473/1042-15							
D14	1S2473/1042-15	GE-300	D200	PTC214	HEPR0600	SK3100	RT218	ECG 177
D15	1S2473/1042-15	GE-300	D200	PTC214	HEPR0600	SK3100	RT218	ECG 177
D16	1S2473/1042-15	GE-300	D200	PTC214	HEPR0600	SK3100	RT218	ECG 177
D17	1S2473/1042-15	GE-300	D200	PTC214	HEPR0600	SK3100	RT218	ECG 177
D18	1N60(P)/1042-13	1N60 (12)	1N60 (12)	PTC206 (12)	HEP135 (12)	SK3088 (12)		ECG 109 (12)
D19	1N60(P)/1042-13							
D20	1N60(P)/1042-13							
D21	1N60(P)/1042-13							
D22	KB-262/1042-23							
D23	1N60/1042-12	1N60	1N60	PTC206	HEP135	SK3088		ECG 109
D24	1N60/1042-12	1N60	1N60	PTC206	HEP135	SK3088		ECG 109
D25	1N60/1042-12	1N60	1N60	PTC206	HEP135	SK3088		ECG 109
D26	1N60/1042-12	1N60	1N60	PTC206	HEP135	SK3088		ECG 109
D27	1N60/1042-12	1N60	1N60	PTC206	HEP135	SK3088		ECG 109
D28	1N4448/1042-16	GE-300	D200	PTC214	HEPR0600	SK3100	RT218	ECG 177
D29	1N60/1042-12	1N60	1N60	PTC206	HEP135	SK3088		ECG 109
D30	1S2473/1042-15	GE-300	D200	PTC214	HEPR0600	SK3100	RT218	ECG 177
D31	1S2473/1042-15	GE-300	D200	PTC214	HEPR0600	SK3100	RT218	ECG 177
D32	1S2473/1042-15	GE-300	D200	PTC214	HEPR0600	SK3100	RT218	ECG 177
D33	1N60/1042-12	1N60	1N60	PTC206	HEP135	SK3088		ECG 109
D34	1N60/1042-12	1N60	1N60	PTC206	HEP135	SK3088		ECG 109
D35	ZF-8.2/1042-19 8.2V Zener	GE-X11	Z-1208	ZB8.2	HEPZ0411			ECG 5072
D36	ZW0-9.1/1042-18 9.1V Zener	GEZD-9.1		PTC505	HEPZ0412	SK3060	RT-204	ECG 139
D37	ZW0-9.1/1042-18 9.1V Zener	GEZD-9.1		PTC505	HEPZ0412	SK3060	RT-240	ECG 139
D38	1S2473/1042-15	GE-300	D200	PTC214	HEPR0600	SK3100	RT218	ECG 177
D39	1S2473/1042-15	GE-300	D200	PTC214	HEPR0600	SK3100	RT218	ECG 177
D40	1S2473/1042-15	GE-300	D200	PTC214	HEPR0600	SK3100	RT218	ECG 177
D41	1S2473/1042-15	GE-300	D200	PTC214	HEPR0600	SK3100	RT218	ECG 177
D42	1S2473/1042-15	GE-300	D200	PTC214	HEPR0600	SK3100	RT218	ECG 177
D43	1S2473/1042-15	GE-300	D200	PTC214	HEPR0600	SK3100	RT218	ECG 177
D44	ZW0-9.1/1042-18 9.1V Zener	GEZD-9.1		PTC505	HEPZ0412	SK3060	RT-240	ECG 139
D45	1S2473/1042-15	GE-300	D200	PTC214	HEPR0600	SK3100	RT218	ECG 177
D46	1N60/1042-12	1N60	1N60	PTC206	HEP135	SK3088		ECG 109
D47	1N60/1042-12	1N60	1N60	PTC206	HEP135	SK3088		ECG 109
D48	1S1007/1042-14	GE-300 (12)	D200 (12)	PTC214 (12)	HEPR0600(12)	SK3100 (12)	RT218 (12)	ECG 177 (12)
D49	1S1007/1042-14							
D50	1S1007/1042-14							
D51	1S1007/1042-14							
D52	1S2473/1042-15	GE-300	D200	PTC214	HEPR0600	SK3100	RT218	ECG 177
D53	KB-262/1042-23							
D54	KB-262/1042-23							
D55	KB-262/1042-23							
D56	1S-2473/1042-15	GE-300	D200	PTC214	HEPR0600	SK3100	RT218	ECG 177
D57	1S-2473/1042-15	GE-300	D200	PTC214	HEPR0600	SK3100	RT218	ECG 177
D58	1N60/1042-12	1N60	1N60	PTC206	HEP135	SK3088		ECG 109
D59	1N60/1042-12	1N60	1N60	PTC206	HEP135	SK3088		ECG 109
D60	1N60(P)/1042-13	1N60	1N60	PTC206	HEP135	SK3088		ECG 109
D61	1N60(P)/1042-13	1N60	1N60	PTC206	HEP135	SK3088		ECG 109
D62	1N60(P)/1042-13	1N60	1N60	PTC206	HEP135	SK3088		ECG 109
D63	1N60/1042-12	1N60	1N60	PTC206	HEP135	SK3088		ECG 109
D64	SR1K-2/1042-17	GE-504A	5A4D	PTC201	HEPR0052	SK3031	PTC213	ECG 116
D65	SR1K-2/1042-17	GE-504A	5A4D	PTC201	HEPR0052	SK3031	PTC213	ECG 116
IC1	TA7045M/1042-11							ECG 724
IC2	TA7045M/1042-11							ECG 724
TR1	3SK22Y/1042-01				HEPF2004	SK3050	RT180	ECG 222
TR2	2SC839(H)/1042-04	GE-10	TR-24	PTC126	HEP723	SK3018	RT107	ECG 107
TR3	2SC839(H)/1042-04	GE-10	TR-24	PTC126	HEP723	SK3018	RT107	ECG 107
TR4	2SC839(H)/1042-04	GE-10	TR-24	PTC126	HEP723	SK3018	RT107	ECG 107
TR5	2SC839(H)/1042-04	GE-10	TR-24	PTC126	HEP723	SK3018	RT107	ECG 107
TR6	2SC839(H)/1042-04	GE-10	TR-24	PTC126	HEP723	SK3018	RT107	ECG 107
TR7	2SK30(Y)/1042-02	GE-FET-2	FE-100	PTC152	HEPF0021	SK3116	RT175	ECG 132
TR8	2SC839(H)/1042-04	GE-10	TR-24	PTC126	HEP723	SK3018	RT107	ECG 107
TR9	2SC945(Q)(R), 2SC372(Y)/1042-03	GE-20	TR-24	PTC139	HEP724	SK3038	RT102	ECG 123A
TR10	2SC372(Y) 2SC945(R)/1042-03	GE-20	TR-24	PTC139	HEP724	SK3038	RT102	ECG 123A
TR11	2SC839(H)/1042-04	GE-10	TR-24	PTC126	HEP723	SK3018	RT107	ECG 107
TR12	2SC839(H)/1042-04	GE-10	TR-24	PTC126	HEP723	SK3018	RT107	ECG 107
TR13	2SC839(H)/1042-04	GE-10	TR-24	PTC126	HEP723	SK3018	RT107	ECG 107
TR14	2SC839(H)/1042-04	GE-10	TR-24	PTC126	HEP723	SK3018	RT107	ECG 107
TR15	2SC372(Y), 2SC945(R)/1042-03	GE-20	TR-24	PTC139	HEP724	SK3038	RT102	ECG 123A

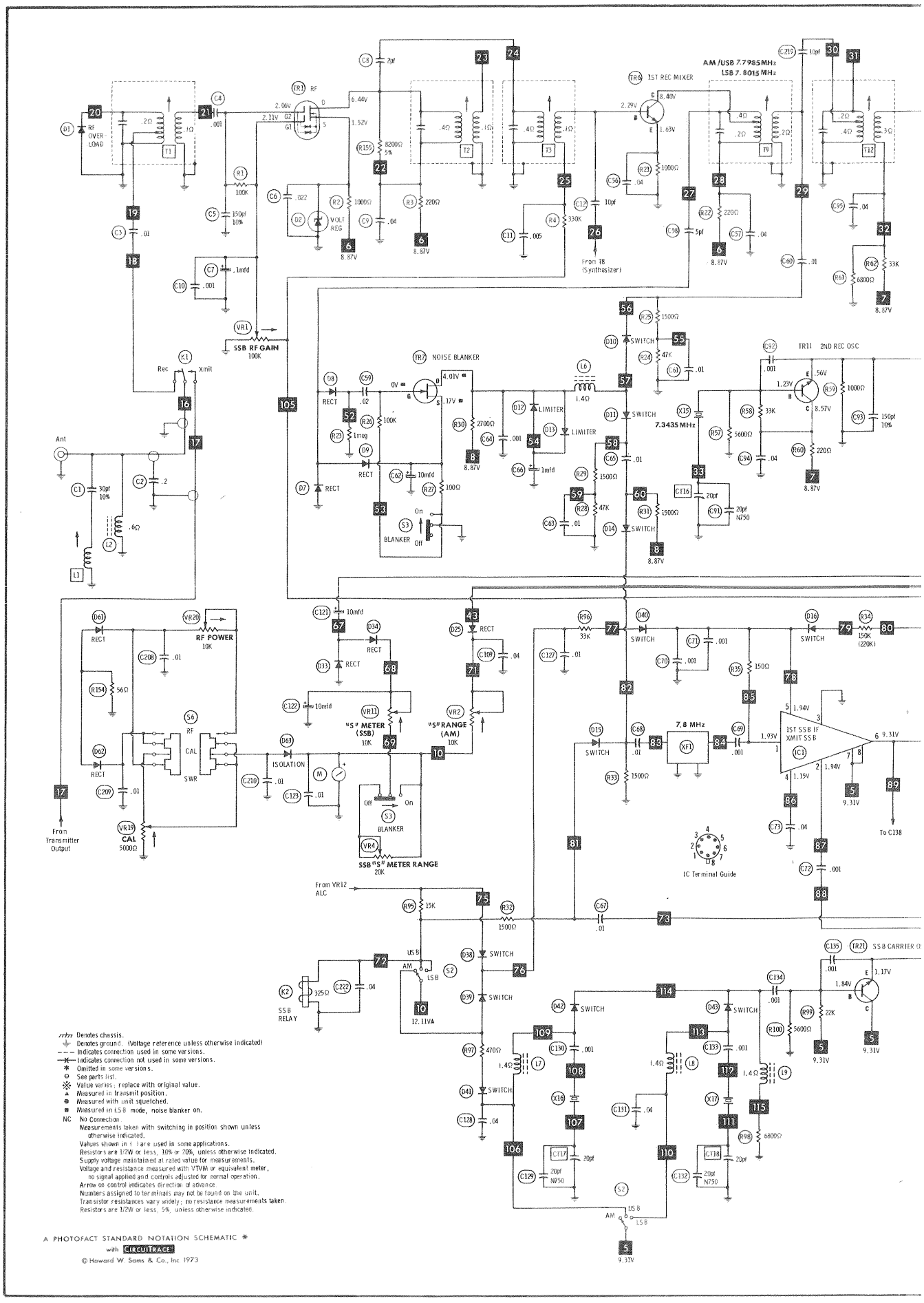
AM/USB 7.7985 MHz
LSB 7.8015 MHz
TR6 1ST REC MIXER
TR1 RF
RF OVER LOAD
VOLT REG
SSB RF GAIN 100K
Rec
Xmit
Ant
TR7 NOISE BLANKER
BLANKER
From T8 (Synthesizer)
TR11 2ND REC OSC
7.3435 MHz
RF POWER 10K
"S" METER (SSB) 10K
"S" RANGE (AM) 10K
ISOLATION
CAL 5000Ω
SSB "S" METER RANGE 20K
From Transmitter Output
From VR12 ALC
SSB RELAY
7.8 MHz
1ST SSB IF XMIT SSB
IC Terminal Guide
To C138
SSB CARRIER O
Denotes chassis.
Denotes ground. (Voltage reference unless otherwise indicated)
Indicates connection used in some versions.
Indicates connection not used in some versions.
Omitted in some versions.
See parts list.
Value varies; replace with original value.
Measured in transmit position.
Measured with unit squelched.
Measured in LSB mode, noise blanker on.
NC No Connection
Measurements taken with switching in position shown unless otherwise indicated.
Values shown in ( ) are used in some applications.
Resistors are 1/2W or less, 10% or 20%, unless otherwise indicated.
Supply voltage maintained at rated value for measurements.
Voltage and resistance measured with VTVM or equivalent meter, no signal applied and controls adjusted for normal operation.
Arrow on control indicates direction of advance.
Numbers assigned to terminals may not be found on the unit.
Transistor resistances vary widely; no resistance measurements taken.
Resistors are 1/2W or less, 5%, unless otherwise indicated.
A PHOTOFACT STANDARD NOTATION SCHEMATIC *
with CIRCUITRACE
© Howard W. Sams & Co., Inc. 1973

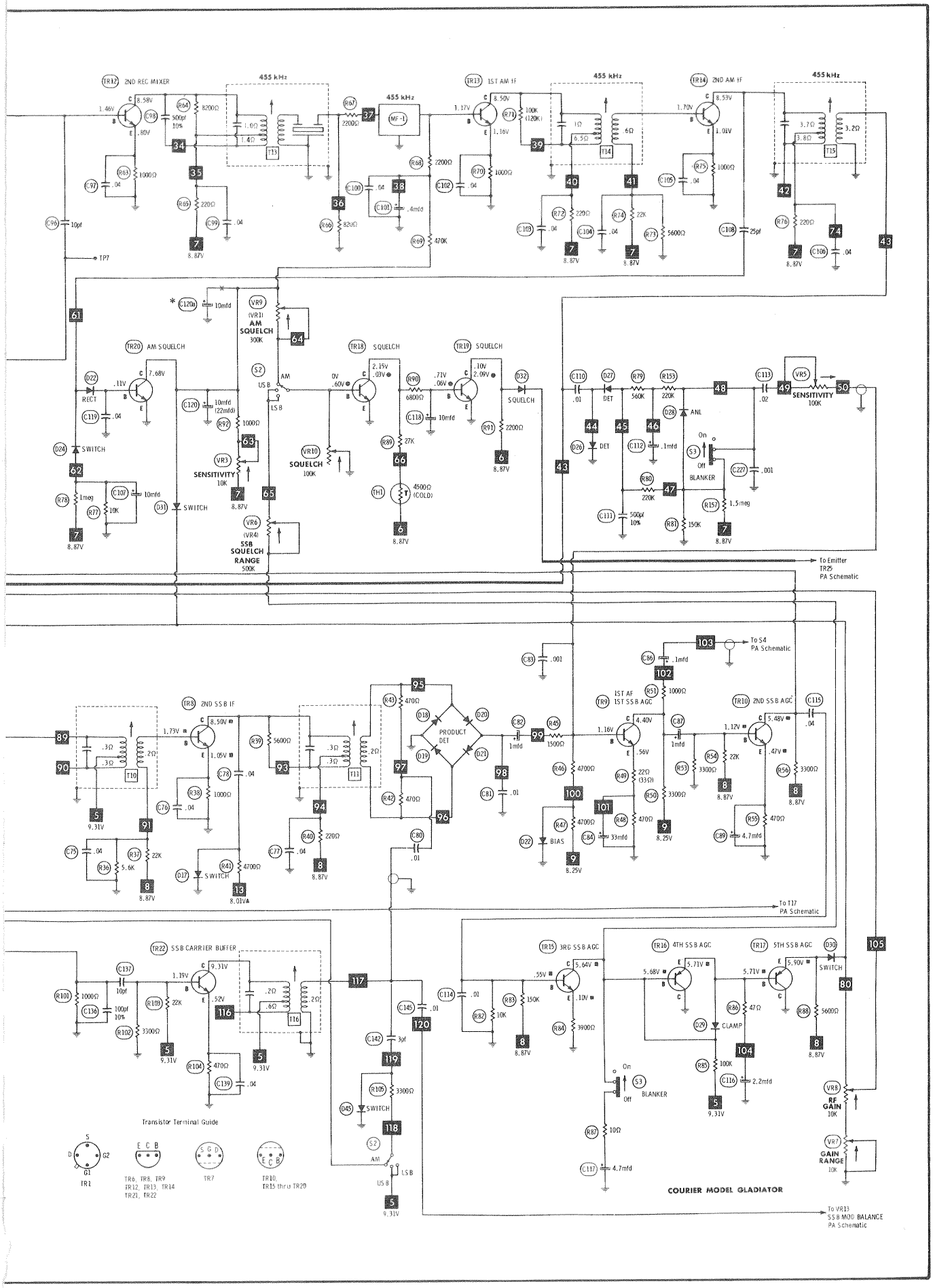
TR12 2ND REC MIXER
455 kHz
TR13 1ST AM IF
TR14 2ND AM IF
MF-1
TP7
TR20 AM SQUELCH
TR18 SQUELCH
TR19 SQUELCH
AM SQUELCH 300K
SENSITIVITY 10K
SQUELCH 100K
SSB SQUELCH RANGE 500K
SENSITIVITY 100K
BLANKER
To Emitter TR25 PA Schematic
To S4 PA Schematic
TR8 2ND SSB IF
PRODUCT DET
TR9 1ST AF 1ST SSB AGC
TR10 2ND SSB AGC
To T17 PA Schematic
TR22 SSB CARRIER BUFFER
TR15 3RD SSB AGC
TR16 4TH SSB AGC
TR17 5TH SSB AGC
RF GAIN 10K
GAIN RANGE 10K
Transistor Terminal Guide
TR1
TR6, TR8, TR9 TR12, TR13, TR14 TR21, TR22
TR7
TR10, TR15 thru TR20
COURIER MODEL GLADIATOR
To VR13 SSB MOD BALANCE PA Schematic

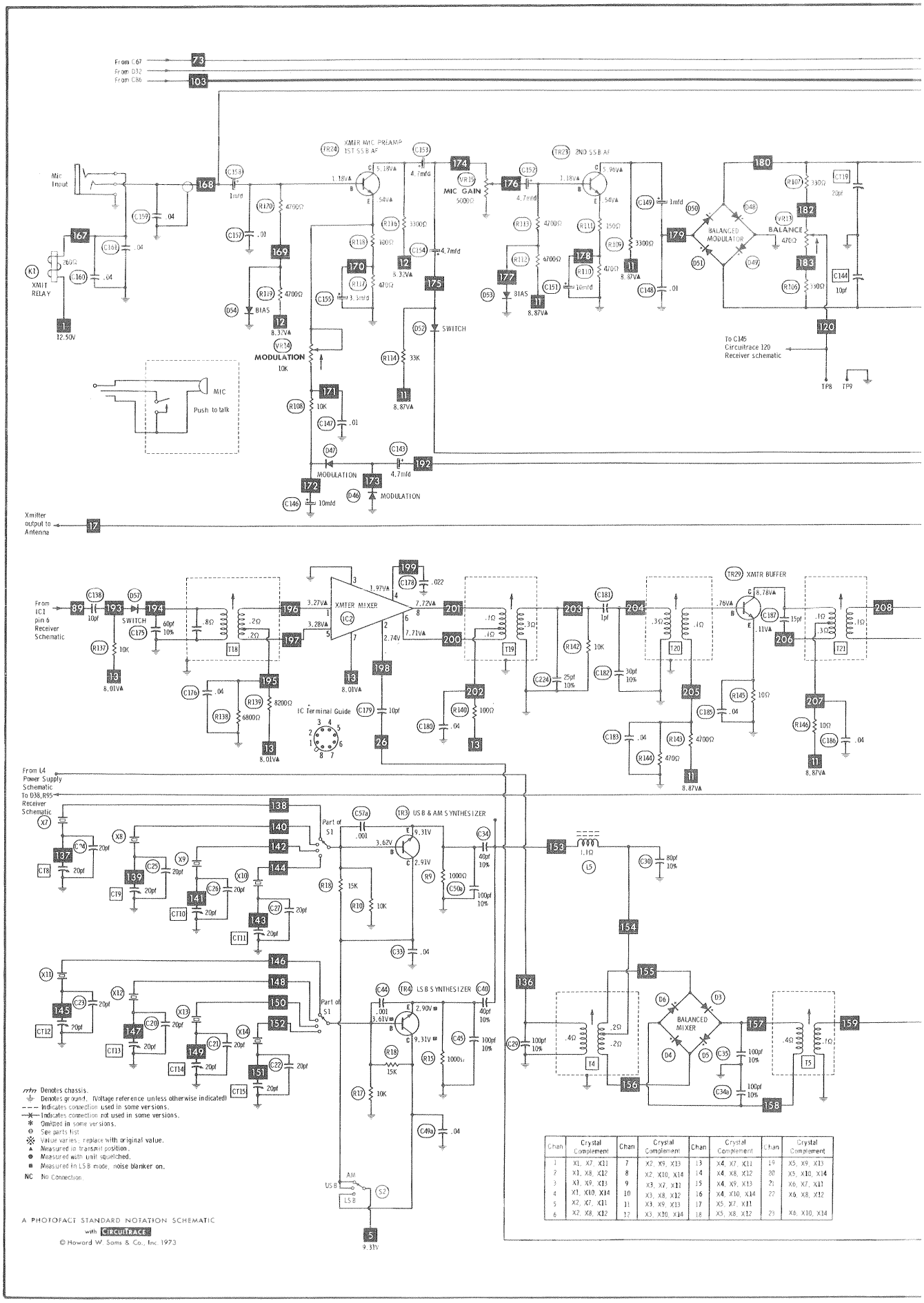

Denotes chassis.
Denotes ground. (Voltage reference unless otherwise indicated)
Indicates connection used in some versions.
Indicates connection not used in some versions.
* Omitted in some versions.
⊖ See parts list.
※ Value varies; replace with original value.
▲ Measured in transmit position.
● Measured with unit squelched.
■ Measured in LSB mode, noise blanker on.
NC No Connection.

Chan	Crystal Complement	Chan	Crystal Complement	Chan	Crystal Complement	Chan	Crystal Complement
1	X1, X7, X11	7	X2, X9, X13	13	X4, X7, X11	19	X5, X9, X13
2	X1, X8, X12	8	X2, X10, X14	14	X4, X8, X12	20	X5, X10, X14
3	X1, X9, X13	9	X3, X7, X11	15	X4, X9, X13	21	X6, X7, X11
4	X1, X10, X14	10	X3, X8, X12	16	X4, X10, X14	22	X6, X8, X12
5	X2, X7, X11	11	X3, X9, X13	17	X5, X7, X11		
6	X2, X8, X12	12	X3, X10, X14	18	X5, X8, X12	23	X6, X10, X14

A PHOTOFACT STANDARD NOTATION SCHEMATIC
with CIRCUITRACE

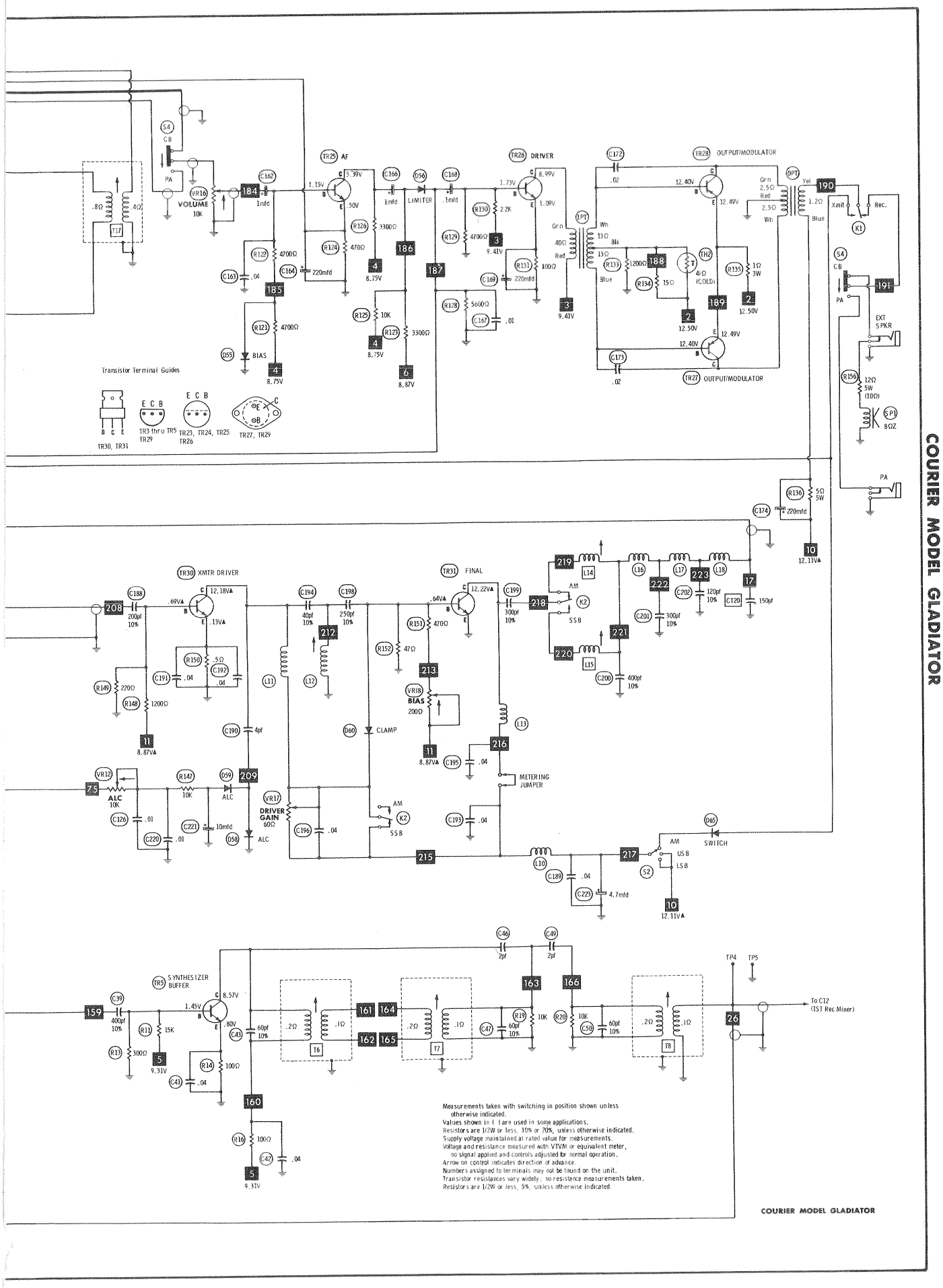
TR25 AF
TR26 DRIVER
TR28 OUTPUT/MODULATOR
TR27 OUTPUT/MODULATOR
VOLUME 10K
LIMITER
BIAS
Transistor Terminal Guides
TR30, TR31
TR3 thru TR5 TR29
TR23, TR24, TR25 TR26
TR27, TR29
TR30 XMTR DRIVER
TR31 FINAL
ALC 10K
DRIVER GAIN 60Ω
BIAS 200Ω
CLAMP
METERING JUMPER
SWITCH
TR5 SYNTHESIZER BUFFER
To C12 (1ST Rec Mixer)
Measurements taken with switching in position shown unless otherwise indicated.
Values shown in ( ) are used in some applications.
Resistors are 1/2W or less, 10% or 20%, unless otherwise indicated.
Supply voltage maintained at rated value for measurements.
Voltage and resistance measured with VTVM or equivalent meter, no signal applied and controls adjusted for normal operation.
Arrow on control indicates direction of advance.
Numbers assigned to terminals may not be found on the unit.
Transistor resistances vary widely; no resistance measurements taken.
Resistors are 1/2W or less, 5%, unless otherwise indicated.
COURIER MODEL GLADIATOR

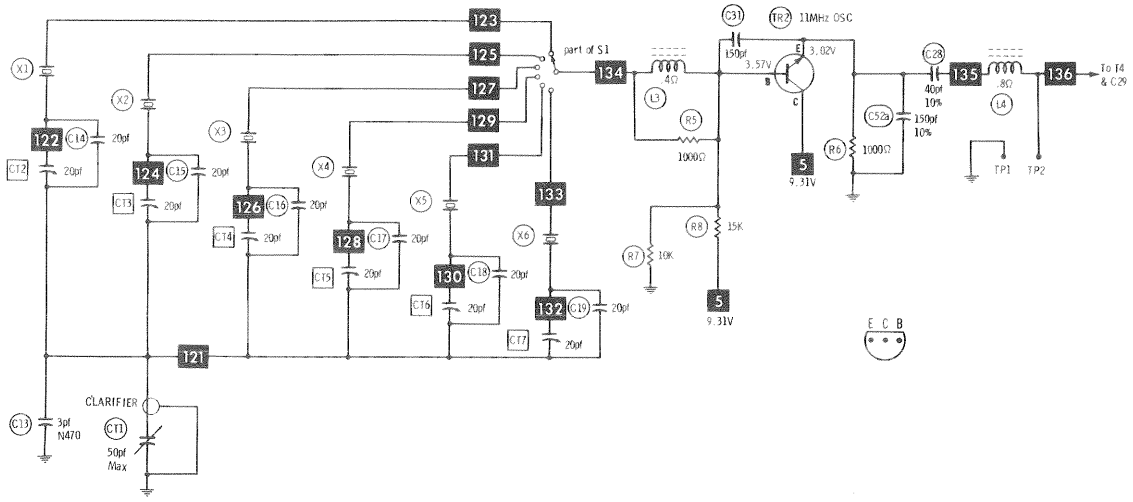

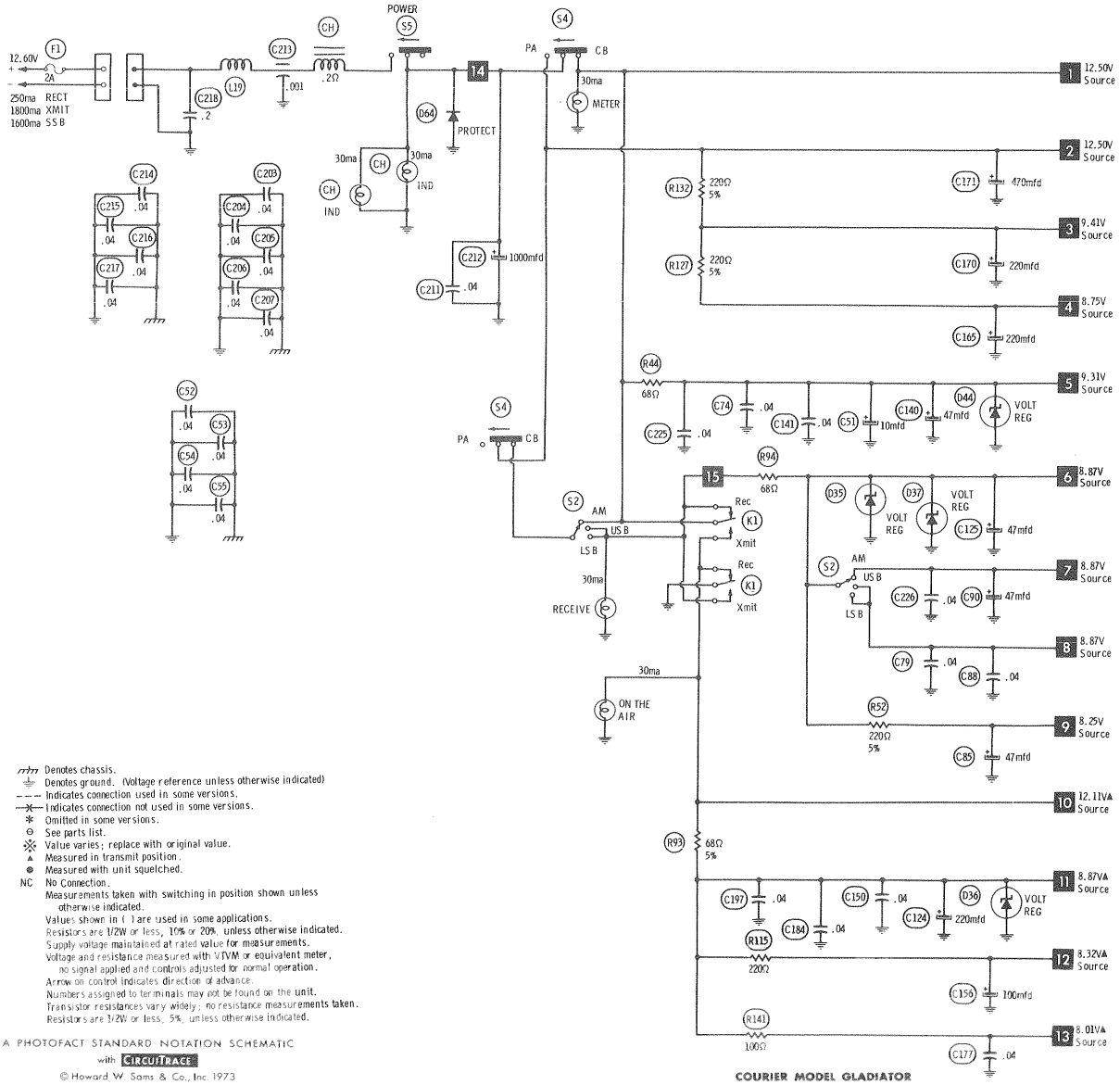

Denotes chassis.
Denotes ground. (Voltage reference unless otherwise indicated)
Indicates connection used in some versions.
Indicates connection not used in some versions.
* Omitted in some versions.
⊖ See parts list.
※ Value varies; replace with original value.
▲ Measured in transmit position.
● Measured with unit squelched.
NC No Connection.
Measurements taken with switching in position shown unless otherwise indicated.
Values shown in ( ) are used in some applications.
Resistors are 1/2W or less, 10% or 20%, unless otherwise indicated.
Supply voltage maintained at rated value for measurements.
Voltage and resistance measured with VTVM or equivalent meter, no signal applied and controls adjusted for normal operation.
Arrow on control indicates direction of advance.
Numbers assigned to terminals may not be found on the unit.
Transistor resistances vary widely; no resistance measurements taken.
Resistors are 1/2W or less, 5%, unless otherwise indicated.

A PHOTOFACT STANDARD NOTATION SCHEMATIC
with CIRCUITRACE

COURIER MODEL GLADIATOR

PARTS LIST AND DESCRIPTION (CONTINUED)

(When ordering parts, state Model, Part Number, and Description.)

SEMICONDUCTORS (cont)

ITEM No.	TYPE / MFGR. No./PART No.	REPLACEMENT DATA						
		GENERAL ELECTRIC PART No.	INTERNATIONAL RECTIFIER PART No.	MALLORY PART No.	MOTOROLA PART No.	RCA PART No.	SPRAGUE PART No.	SYLVANIA PART No.
TR16	2SA495(Y)/1042-06	GE-22	TR-19	PTC103	HEP52	SK3118	RT126	ECG 159
TR17	2SA495(Y)/1042-06	GE-22	TR-19	PTC103	HEP52	SK3118	RT126	ECG 159
TR18	2SC372(Y), 2SC945(R)/1042-03	GE-20	TR-24	PTC139	HEP724	SK3038	RT102	ECG 123A
TR19	2SC372(Y), 2SC945(R)/1042-03	GE-20	TR-24	PTC139	HEP724	SK3038	RT102	ECG 123A
TR20	2SC372(Y), 2SC945(R)/1042-03	GE-20	TR-24	PTC139	HEP724	SK3038	RT102	ECG 123A
TR21	2SC839(H)/1042-04	GE-10	TR-24	PTC126	HEP723	SK3018	RT107	ECG 107
TR22	2SC839(H)/1042-04	GE-10	TR-24	PTC126	HEP723	SK3018	RT107	ECG 107
TR23	2SC372(Y), 2SC945(R)/1042-03	GE-20	TR-24	PTC139	HEP724	SK3038	RT102	ECG 123A
TR24	2SC372(Y), 2SC945(R)/1042-03	GE-20	TR-24	PTC139	HEP724	SK3038	RT102	ECG 123A
TR25	2SC372(Y), 2SC945(R)/1042-03	GE-20	TR-24	PTC139	HEP724	SK3038	RT102	ECG 123A
TR26	2SC735(Y)/1042-05	GE-10	TR-21	PTC123	HEP53	SK3124	RT102	ECG 123A
TR27	2SB474(Yel)/1042-10		TR-94			SK3082 (7)		ECG 226 (7)
TR28	2SB474(Yel)/1042-10							
TR29	2SC710(C)/1042-07	GE-10	TR-24	PTC126	HEP723	SK3018	RT107	ECG 107
TR30	2SC1306/1042-08							
TR31	2SC1307/1042-09							

(6) Matched pair.
(7) Two required - select matched pair.
(12) Four required - select a matched set.

ELECTROLYTIC CAPACITORS

ITEM No.	RATING		REPLACEMENT DATA					
			MFGR. PART No.	ARCO PART No.	CENTRALAB PART No.	CORNELL-DUBILIER PART No.	MALLORY PART No.	SPRAGUE PART No.
C7	.1	25V	1042-122			TYR13BF104K	T1M104K035P0X	SD35-R109
C51	10	16V	1042-129	RME-B-E-010	EP15-10	PC10-25	VTT10A25	EV-1222
C62	10	16V	1042-129	RME-B-E-010	EP15-10	PC10-25	VTT10A25	EV-1222
C66	1	50V		RME-A-J-001	EP50-2	PC1-50	MTV1CB50	EV-1615
	1	25V	1042-132					
C82	1	10V	1042-120			TYR13BC105K	T1M105K010P0X	SD35-19
C84	33	6.3V	1042-117			TYR13BC336K	T1M336K006P0V	SD6-339
C85	47	16V	1042-128	RME-E-E-050	EP15-50	PC50-16	MTV50CB15	EV-1226
C86	.1	16V	1042-121			TYR13BE104K	T1M104K035P0X	SD35-R109
C87	1	10V	1042-120			TYR13BC105K	T1M105K010P0X	SD35-19
C89	4.7	1-V	1042-119			TYR13BC474K	T1M475K010P0X	SD10-4R79
C90	47	16V	1042-128	RME-E-E-050	EP15-50	PC50-16	MTV50CB15	EV-1226
C101	.47	50V	1042-133			TYR13BG474K	TCD474M050EL	EV-1610
C107	10	16V	1042-129	RME-B-E-010	EP15-10	PC10-25	VTT10A25	EV-1222
C112	.1	25V	1042-122			TYR13BF104K	T1M104K035P0X	SD35-R109
C116	2.2	16V	1042-131	RME-A-E-003	EP15-5	WBR5-50	VTT3R3A50	EV-1318
C117	4.7	25V	1042-130	RME-A-G-005	EP30-5	PC5-50	VTT4R7A50	EV-1319
C118	10	16V	1042-129	RME-B-E-010	EP15-10	PC10-25	VTT10A25	EV-1222
C120	10	16V	1042-129	RME-B-E-010	EP15-10	PC10-25	VTT10A25	EV-1222
	22							
C120a	10	16V	1042-129	RME-B-E-010	EP15-10	PC10-25	VTT10A25	EV-1222
C121	10	16V	1042-129	RME-B-E-010	EP15-10	PC10-25	VTT10A25	EV-1222
C122	10	16V	1042-129	RME-B-E-010	EP15-10	PC10-25	VTT10A25	EV-1222
C124	220	16V	1042-125	RME-J-E-250	EA15-250	PC250-25	MTV250DE15	EV-1245
C125	47	16V	1042-128	RME-E-E-050	EP15-50	PC50-16	MTV50CB15	EV-1226
C140	47	16V	1042-128	RME-E-E-050	EP15-50	PC50-16	MTV50CB15	EV-1226
C143	4.7	25V	1042-130	RME-A-G-005	EP30-5	PC5-50	VTT4R7A50	EV-1319
C146	10	16V	1042-129	RME-B-E-010	EP15-10	PC10-25	VTT10A25	EV-1222
C149	1	10V	1042-120			TYR13BC105K	T1M105K010P0X	SD35-19
C151	10	6.3V	1042-118			TYR13BC106K	T1M106K006P0W	SD20-109
C152	4.7	10V	1042-119			TYR13BC475K	T1M475K010P0X	SD10-4R79
C153	4.7	10V	1042-119			TYR13BC475K	T1M475K010P0X	SD10-4R79
C154	4.7	10V	1042-119			TYR13BC475K	T1M475K010P0X	SD10-4R79
C155	33	6.3V	1042-117			TYR13BC336K	T1M336K006P0V	SD6-339
C156	100	16V	1042-127	RME-E-E-100	EP15-100	PC100-16	MTV100CD15	EV-1230
C158	1	10V	1042-120			TYR13BC105K	T1M105K010P0X	SD35-19
C162	1	10V	1042-120			TYR13BC105K	T1M105K010P0X	SD35-19
C164	220	6.3V	1042-126	RME-G-D-250	EA15-250	PC250-10	MTV250DB10	EV-1145
C165	220	16V	1042-125	RME-J-E-250	EA15-250	PC250-25	MTV250DE15	EV-1245
C166	1	10V	1042-120			TYR13BC105K	T1M105K010P0X	SD35-19
C168	.1	16V	1042-121			TYR13BE104K	T1M104K035P0X	SD35-R109
C169	220	6.3V	1042-126	RME-G-D-250	EA15-250	PC250-10	MTV250DB10	EV-1145
C170	220	16V	1042-125	RME-J-E-250	EA15-250	PC250-25	MTV250DE15	EV-1245
C171	16V	16V	1042-124	ME-G500	EA15-500	WBR500-16	TC1505B	TVA-1162
C174	220	25V	1042-134	ME-G250	EA30-250	WBR250-25	TC25025B	TVA-1208
C212	1000	25V	1042-123	RME-P-G-1000	EA30-1000	WBR1000-25	MTA1000G25	EV-1360
C221	10	16V	1042-129	RME-B-E-010	EP15-10	PC10-25	VTT10A25	EV-1222
C223	4.7	25V	1042-130	RME-A-G-005	EP30-5	PC5-50	VTT4R7A50	EV-1319

PARTS LIST AND DESCRIPTION (CONTINUED)

(When ordering parts, state Model, Part Number, and Description.)

CAPACITORS

ITEM No.	RATING			MFGR. PART No.	REPLACEMENT DATA				
					ARCO/ELMENCO PART No.	CENTRALAB PART No.	CORNELL-DUBILIER PART No.	MALLORY PART No.	SPRAGUE PART No.
CT1	50			1042-101					
CT2	20			1042-53					
CT3	20			1042-53					
CT4	20			1042-53					
CT5	20			1042-53					
CT6	20			1042-53					
CT7	20			1042-53					
CT8	20			1042-53					
CT9	20			1042-53					
CT10	20			1042-53					
CT11	20			1042-53					
CT12	20			1042-53					
CT13	20			1042-53					
CT14	20			1042-53					
CT15	20			1042-53					
CT16	20			1042-53					
CT17	20			1042-53					
CT18	20			1042-53					
CT19	20			1042-53					
CT20	150			1042-102					
C1	30	50V	10%		DM-15-300J	CPR-30J		SX430	
C2	.2	100V			1DP-3-224			EWF1A022	1PB-P22
C3	.01	50V			1DP-1-103			EWF1A110	1PB-S10
C4	.001	50V		1042-289				EWF1A210	1PB-D10
C5	150	50V	10%		DM-15-151J	CPR-150J	CD15FD151J03	SX315	424MC1500J501
C6	.022	50V			1DP-1-223			EWF1A122	1PB-S22
C8	2	50V		1042-154					
C9	.04	50V			1DP-1-403			EWF1A139	1PB-S39
C10	.001	50V		1042-289				EWF1A210	1PB-D10
C11	.005	50V			1DP-1-502			EWF1A250	1PB-D47
C12	10	50V			DM-15-100J		CD15CD100J03	SX410	
C13	3	N470		1042-217	*			*	10TCT-V30
C14	20	N1500		1042-215				CN15-418	10TCW-Q20
C15	20	N1500		1042-215				CN15-418	10TCW-Q20
C16	20	N1500		1042-215				CN15-418	10TCW-Q20
C17	20	N1500		1042-215				CN15-418	10TCW-Q20
C18	20	N1500		1042-215				CN15-418	10TCW-Q20
C19	20	N1500		1042-215				CN51-418	10TCW-Q20
C20	2	50V			DM-15-200J	CPR-20J		SX420	
C21	20	50V			DM-15-200J	CPR-20J		SX420	
C22	20	50V			DM-15-200J	CPR-20J		SX420	
C23	20	50V			DM-15-200J	CPR-20J		SX420	
C24	20	50V			DM-15-200J	CPR-20J		SX420	
C25	20	50V			DM-15-200J	CPR-20J		SX420	
C26	20	50V			DM-15-200J	CPR-20J		SX420	
C27	20	50V			DM-15-200J	CPR-20J		SX420	
C28	40	50V	10%		DM-15-390J	CPR-39J	CD15ED390J03	SX439	MS-44
C29	100	50V	10%		DM-15-101J	CPR-100J	CD15FD101J03	SX310	424MC1000J501
C30	80	50V	10%		DM-15-820J	CPR-82J	CD15ED820J03	SX482	424MC82R0J501
C31	150				CCD-151	DD-151	GP150	GP315	10TS-T15
C33	.04	50V			1DP-1-403			EWF1A139	1PB-S39
C34	40	50V	10%		DM-15-390J	CPR-39J	CD15ED390J03	SX439	MS-44
C34a	100	50V	10%		DM-15-101J	CPR-100J	CD15FD101J03	SX310	424MC1000J501
C35	100	50V	10%		DM-15-101J	CPR-100J	CD15FD101J03	SX310	424MC1000J501
C39	400	50V	10%		DM-19-391J	CPR-390J	CD15FD391J03	SX339	MS-34
C40	40	50V	10%		DM-15-390J	CPR-39J	CD15ED390J03	SX439	MS-44
C41	.04	50V			1DP-1-403			EWF1A139	1PB-S39
C42	.04	50V			1DP-1-403			EWF1A139	1PB-S39
C43	60	50V	10%		DM-15-620J	CPR-62J		SX462	MS-46
C44	.001	50V		1042-289				EWF1A210	1PB-D10
C45	100	50V	10%		DM-15-101J	CPR-100J	CD15FD101J03	SX310	424MC1000J501
C46	2	50V		1042-154					
C47	60	50V	10%		DM-15-620J	CPR-62J		SX462	MS-46
C49	2	50V		1042-154					
C49a	.04	50V			1DP-1-403			EWF1A139	1PB-S39
C50	60	50V	10%		DM-15-620J	CPR-62J		SX462	MS-46
C50a	100	50V	10%		DM-15-101J	CPR-100J	CD15FD101J03	SX310	424MC1000J501
C52	.04	50V			1DP-1-403			EWF1A139	1PB-S39
C52a	150	50V							
C53	.04	50V			1DP-1-403			EWF1A139	1PB-S39
C54	.04	50V			1DP-1-403			EWF1A139	1PB-S39
C55	.04	50V			1DP-1-403			EWF1A139	1PB-S39
C56	.04	50V			1DP-1-403			EWF1A139	1PB-S39
C57	.04	50V			1DP-1-403			EWF1A139	1PB-S39
C57a	.001	50V		1042-289				EWF1A210	1PB-D10
C58	5	50V			DM-15-050D		CD15CD050D03	SX550	
C59	.02				CCD-203	CK-203	MGP02	TA120	TG-S20
C60	.01	50V			1DP-1-103			EWF1A110	1PB-S10
C61	.01				CCD-103	CK-103	MGP01	TA110	TG-S10
C63	.01				CCD-103	CK-103	MGP01	TA110	TG-S10
C64	.001				CCD-102	DD-102	GP1000	SM210	2SS-D10
C65	.01	50V			1DP-1-103			EWF1A110	1PB-S10
C67	.01	50V			1DP-1-103			EWF1A110	1PB-S10
C68	.01	50V			1DP-1-103			EWF1A110	1PB-S10
C69	.001	50V		1042-289				EWF1A210	1PB-D10
C70	.001	50V		1042-289				EWF1A210	1PB-D10
C71	.001	50V		1042-289				EWF1A210	1PB-D10
C72	.001	50V		1042-289				EWF1A210	1PB-D10
C73	.04	50V			1DP-1-403			EWF1A139	1PB-S39
C74	.04	50V			1DP-1-403			EWF1A139	1PB-S39
C75	.04	50V			1DP-1-403			EWF1A139	1PB-S39

PARTS LIST AND DESCRIPTION (CONTINUED)

(When ordering parts, state Model, Part Number, and Description.)

CAPACITORS (cont)

ITEM No.	RATING			MFGR. PART No.	REPLACEMENT DATA				
					ARCO/ELMENCO PART No.	CENTRALAB PART No.	CORNELL-DUBILIER PART No.	MALLORY PART No.	SPRAGUE PART No.
C76	.04	50V			1DP-1-403			EWF1A139	1PB-S39
C77	.04	50V			1DP-1-403			EWF1A139	1PB-S39
C78	.04	50V			1DP-1-403			EWF1A139	1PB-S39
C79	.04	50V			1DP-1-403			EWF1A139	1PB-S39
C80	.01	50V			1DP-1-103			EWF1A110	1PB-S10
C81	.01	50V			1DP-1-103			EWF1A110	1PB-S10
C83	.001	50V		1042-289				EWF1A210	1PB-D10
C88	.04	50V			1DP-1-403			EWF1A139	1PB-S39
C91	20	N750				DTN-20	N20	CN7420	10TCU-Q20
C92	.001	50V		1042-289				EWF1A210	1PB-D10
C93	150	50V	10%		DM-15-151J	CPR-150J	CD15FD151J03	SX315	424MC1500J501
C94	.04	50V			1DP-1-403			EWF1A139	1PB-S39
C95	.04	50V			1DP-1-403			EWF1A139	1PB-S39
C96	10	50V			DM-15-100J		CD15CD100J03	SX410	
C97	.04	50V			1DP-1-403			EWF1A139	1PB-S39
C98	500	50V	10%		DM-19-501J	CPR-510J	CD15FD511J03	SX351	424ME5100J501
C99	.04	50V			1DP-1-403			EWF1A139	1PB-S39
C100	.04	50V			1DP-1-403			EWF1A139	1PB-S39
C102	.04	50V			1DP-1-403			EWF1A139	1PB-S39
C103	.04	50V			1DP-1-403			EWF1A139	1PB-S39
C104	.04	50V			1DP-1-403			EWF1A139	1PB-S39
C105	.04	50V			1DP-1-403			EWF1A139	1PB-S39
C106	.04	50V			1DP-1-403			EWF1A139	1PB-S39
C108	25	50V	10%		DM-15-240J	CPR-24J		SX424	MS-424
C109	.04	50V			1DP-1-403			EWF1A139	1PB-S39
C110	.01	50V			1DP-1-103			EWF1A110	1PB-S10
C111	500	50V	10%		DM-19-501J	CPR-510J	CD15FD511J03	SX351	424ME5100J501
C113	.02	50V			1DP-1-203			EWF1A122	1PB-S22
C114	.01	50V			1DP-1-103			EWF1A110	1PB-S10
C115	.04	50V			1DP-1-403			EWF1A139	1PB-S39
C119	.04	50V			1DP-1-403			EWF1A139	1PB-S39
C123	.01	50V			1DP-1-103			EWF1A110	1PB-S10
C126	.01	50V			1DP-1-103			EWF1A110	1PB-S10
C127	.01	50V			1DP-1-103			EWF1A110	1PB-S10
C128	.04	50V			1DP-1-403			EWF1A139	1PB-S39
C129	20	N750				DTN-20	N20	CN7420	10TCU-Q20
C130	.001	50V		1042-289				EWF1A210	1PB-D10
C131	.04	50V			1DP-1-403			EWF1A139	1PB-S39
C132	20	N750				DTN-20	N20	CN7420	10TCU-Q20
C133	.001	50V		1042-289				EWF1A210	1PB-D10
C134	.001	50V		1042-289				EWF1A210	1PB-D10
C135	.001	50V		1042-289				EWF1A210	1PB-D10
C136	100	50V	10%		DM-15-101J	CPR-100J	CD15FD101J03	SX310	424MC1000J501
C137	10	50V			DM-15-100J		CD15CD100J03	SX410	
C138	10	50V			DM-15-100J		CD15CD100J03	SX410	
C139	.04	50V			1DP-1-403			EWF1A139	1PB-S39
C141	.04	50V			1DP-1-403			EWF1A139	1PB-S39
C142	3	50V							
C144	10	50V			DM-15-100J		CD15CD100J03	SX410	
C145	.01	50V			1DP-1-103			EWF1A110	1PB-S10
C147	.01	50V			1DP-1-103			EWF1A110	1PB-S10
C148	.01	50V			1DP-1-103			EWF1A110	1PB-S10
C150	.04	50V			1DP-1-403			EWF1A139	1PB-S39
C157	.01	50V			1DP-1-103			EWF1A110	1PB-S10
C159	.04	50V			1DP-1-403			EWF1A139	1PB-S39
C160	.04	50V			1DP-1-403				
C161	.04	50V			1DP-1-403			EWF1A139	1PB-S39
C163	.04	50V			1DP-1-403			EWF1A139	1PB-S39
C167	.01	50V			1DP-1-103			EWF1A110	1PB-S10
C172	.02	50V			1DP-1-203			EWF1A122	1PB-S22
C173	.02	50V			1DP-1-203			EWF1A122	1PB-S22
C175	60	50V	10%		DM-15-620J	CPR-62J		SX462	MS-62
C176	.04	50V			1DP-1-403			EWF1A139	1PB-S39
C177	.04	50V			1DP-1-403			EWF1A139	1PB-S39
C178	.02	50V			1DP-1-203			EWF1A122	1PB-S22
C179	10	50V			DM-15-100J		CD15CD100J03	SX410	
C180	.04	50V			1DP-1-403			EWF1A139	1PB-S39
C181	1pf	50V		1042-155					
C182	30	50V	10%		DM-15-300J	CPR-30J		SX430	
C183	.04	50V			1DP-1-403			EWF1A139	1PB-S39
C184	.04	50V			1DP-1-403			EWF1A139	1PB-S39
C185	.04	50V			1DP-1-403			EWF1A139	1PB-S39
C186	.04	50V			1DP-1-403			EWF1A139	1PB-S39
C187	15	50V		1042-149	DM-15-150J			SX415	
C188	200	50V	10%		DM-19-201J	CPR-200J	CD15FD201J03	SX320	424ME2000J501
C189	.04	50V			1DP-1-403			EWF1A139	1PB-S39
C190	4	50V		1042-153					
C191	.04	50V			1DP-1-403			EWF1A139	1PB-S39
C192	.04	50V			1DP-1-403			EWF1A139	1PB-S39
C193	.04	50V			1DP-1-403			EWF1A139	1PB-S39
C194	40	50V	10%		DM-15-390J	CPR-39J	CD15ED390J03	SX439	MS-44
C195	.04	50V			1DP-1-403			EWF1A139	1PB-S39
C196	.04	50V			1DP-1-403			EWF1A139	1PB-S39
C197	.04	50V			1DP-1-403			EWF1A139	1PB-S39
C198	250	50V	10%		DM-19-251J	CPR-240J	CD15FD241J03	SX324	MS-324
C199	300	50V	10%		DM-19-301J	CPR-300J	CD15FD301J03	SX330	424ME3000J501
C200	400	50V	10%		DM-19-391J	CPR-390J	CD15FD391J03	SX339	MS-34
C201	300	50V	10%		DM-19-301J	CPR-300J	CD15FD301J03	SX330	424ME3000J501

PARTS LIST AND DESCRIPTION (CONTINUED)

(When ordering parts, state Model, Part Number, and Description.)

CAPACITORS (cont)

ITEM No.	RATING			MFGR. PART No.	REPLACEMENT DATA				
					ARCO/ELMENCO PART No.	CENTRALAB PART No.	CORNELL-DUBILIER PART No.	MALLORY PART No.	SPRAGUE PART No.
C202	120	50V	10%		DM-15-121J	CPR-120J	CD15FD121J03	SX312	424MC1200J501
C203	.04	50V			1DP-1-403			EWF1A139	1PB-S39
C204	.04	50V			1DP-1-403			EWF1A139	1PB-S39
C205	.04	50V			1DP-1-403			EWF1A139	1PB-S39
C206	.04	50V			1DP-1-403			EWF1A139	1PB-S39
C207	.04	50V			1DP-1-403			EWF1A139	1PB-S39
C208	.01				CCD-103	CK-103	MGP01	TA110	TG-S10
C209	.01				CCD-103	CK-103	MGP01	TA110	TG-S10
C210	.01	50V			1DP-1-103			EWF1A110	1PB-S10
C211	.04	50V			1DP-1-403			EWF1A139	1PB-S39
C213	.001	50V		1042-289					
C214	.04	50V			1DP-1-403			EWF1A139	1PB-S39
C215	.04	50V			1DP-1-403			EWF1A139	1PB-S39
C216	.04	50V			1DP-1-403			EWF1A139	1PB-S39
C217	.04	50V			1DP-1-403			EWF1A139	1PB-S39
C218	.2	100V			1DP-3-224			EWF1A022	1PB-P22
C219	10	50V			DM-15-100J		CD15CD100J03	SX410	
C220	.01	50V			1DP-1-103			EWF1A110	1PB-S10
C222	.04	50V			1DP-1-403			EWF1A139	1PB-S39
C224	25	50V	10%		DM-15-240J	CPR-24J		SX424	MS-424
C225	.04	50V			1DP-1-403			EWF1A139	1PB-S39
C226	.04	50V			1DP-1-403			EWF1A139	1PB-S39
C227	.001	50V		1042-289				EWF1A210	1PB-D10

CONTROLS (All wattages 1/2 watt, or less, unless listed)

ITEM No.	FUNCTION	RESIST-ANCE	REPLACEMENT DATA				
			MFGR. PART No.	CENTRALAB PART No.	CLAROSTAT PART No.	CTS—IRC PART No.	MALLORY PART No.
VR1	SSB RF Gain	100K	1042-95	TSV-100K or [T-100K]	C-104	X201R104B	MTC15L1
VR2	"S" AM Adjust	10K	1042-98	TSV-10K (1) or [T-10K (1)]	C-103 (1)	X201R103B (1)	MTC14L1 (1)
VR3	Sensitivity	10K	1042-98	TSV-10K (1) [T-10K (1)]	C-103 (1)	X201R103B (1)	MTC14L1 (1)
VR4	"SSB" S Meter Range	20K	1042-97	T-20K or [TSV-25K]	C-253	X201R253B	MTC24L1
VR5	Sensitivity	100K	1042-96	TSV-100K(1) or [T-100K (1)]	C-104 (1)	X201R104B (1)	MTC15L1 (1)
VR6	SSB Squelch Range	500K	1042-93	TSV-500K(1) or [T-500K (1)]	C-504 (1)	X201R504B (1)	MTC55L1 (1)
VR7	Gain Range	10K	1042-98	TSV-10K (1) or [T-10K (1)]	C-103 (1)	X201R103B (1)	MTC14L1 (1)
VR8	RF Gain	10K	1042-91	F1-10K (2), SSK102	A47-10K-S (2), KSS-3 or [NP-10K-S (2),	Q11-116 (2) or [BU1(2), CF9, SS1, DC1] *	RU14L, SL36 (2), SL1500 or [UA14L (2), SN1125] or [U20 (2)]
VR9	AM Squelch	300K	1042-94	TSV-500K(1) or [T-500K (1)]	C-504 (1)	X201R504B (1)	MTC3253L1 (1)
VR10	Squelch	100K	1042-90	F1-100K (2), SSK102	A47-100K-S (2), KSS-3 or [NP-100K-S (2), UP-C-400]	Q11-128 (2) or [BU1(2), CF13, SS1, DC1] *	RU15L, SL36 (2), SL1500 or [UA15L (2), SN1125] or [U39 (2)]
VR11	SSB "S" Meter Adjust	10K	1042-98	TSV-10K (1) or [T-10K (1)]	C-103 (1)	X201R103B (1)	MTC14L1 (1)
VR12	ALC	10K	1042-98	TSV-10K (1) or [T-10K (1)]	C-103 (1)	X401R103B (1)	MTC14L1 (1)
VR13	Balance	4700	1042-87	TSV-5K (3) or [T-5000 (3)]	C-502 (3)	X201R502B (3)	MTC53L1 (3)
VR13	Balance	4700	1042-87	TSV-5K (3) or [T-5000 (3)]	C-502 (3)	X201R502B (3)	MTC53L1 (3)
VR14	Modulation Adjust	10K	1042-98	TSV-10K (1) or [T-10K (1)]	C-103 (1)	X201R103B (1)	MTC14L1 (1)
VR15	Mic Gain	5000	1042-99	TSV-5K or [T-5000]	C-502	X201R502B	MTC53L1
VR16	Volume	10K	1042-89	F2-10K (2), SSK102	A47-10K-Z (2), KSS-3 or [NP-10K-Z (2), UP-C-400]	Q13-116(2) or [BU1(2), CF61, SS1, DC1] *	RU14A, SL36 (2), SL3250 or [UA14A (2), SN1125] or [U18 (2)]
VR17	Driver Gain	60 (2 Watt)	1042-88	WP100 or [V-60]		110-60 or [P117R500A]	MR100P
VR18	Bias	200	1042-100	T-200 (1) or [TSV-250 (1)]		X201R251B (1)	MTC251L1 (1)
VR19	Calibration (Cal)	10K	1042-92	F2-10K (2), SSK102	A47-10K-Z (2), KSS-3 or [NP-10K-Z (2), UP-C-400]	Q13-116 (2) or [BU1(2), CF61, SS1, DC1] *	RU14A, SL36 (2), SL1500 or [UA14A (2), SN1125] or [U18 (2)]
VR20	RF Power	10K	1042-98	TSV-10K (1) or [T-10K (1)]	C-103 (1)	X201R103B (1)	MTC14L1 (1)

* "SNPATROL"
(1) Cut off one of the end terminals and bend to fit PC board.
(2) Enlarge mounting hole.
(3) Modify terminals to fit "PC" board.

PARTS LIST AND DESCRIPTION (CONTINUED)

(When ordering parts, state Model, Part Number, and Description.)

RESISTORS (Power and Special)

ITEM No.	RATING	REPLACEMENT DATA	
		WORKMAN PART No.	MFGR. PART No.
R135	1, 1/2W, Film		1042-170
R136	5, 5W, WW		1042-169
R150	.5, 1/4W		

ITEM No.	RATING	REPLACEMENT DATA	
		WORKMAN PART No.	MFGR. PART No.
R156	12, 3W		
TH1	4500 (Cold)		1042-21
TH2	41 (Cold)		1042-22

COILS (RF-IF)

ITEM No.	USE	REPLACEMENT DATA			
		PART No.	MEISSNER PART No.	MILLER PART No.	WORKMAN PART No.
L1	TVI Trap	1042-40			
L2	RF Choke (20uh)	1042-41	19-6022	74F225A1	T300
L3	RF Choke (3.9uh)	1042-45	19-1003	47F396AP	T858
L4	RF Choke (8.2uh)	1042-46	19-2015	74F826AP	T822
L5	RF Choke (10uh)	1042-47	19-2017	74F105AP	T823
L6	Peaking (100uh)	1042-48	19-2025	74F104AI	T866
L7	Peaking (100uh)	1042-48	19-2025	74F104AI	T866
L8	Peaking (100uh)	1042-48	19-2025	74F104AI	T866
L9	Peaking (100uh)	1042-48	19-2025	74F104AI	T866
L10	RF Choke (1.1uh)	1042-42	19-2009	74F106AP	T806
L11	RF Choke (1.1uh)	1042-42	19-2009	74F106AP	T806
L12	Xmtr. Driver				
L13	RF Choke (1.1uh)	1042-42	19-2009	74F106AP	T806
L14	Final Amp (AM)				
L15	Final Amp (SSB)				
L16	RF Filter	1042-43			
L17	RF Filter	1042-43			
L18	RF Filter	1042-43			
L19	RF Choke (15 Turns)	1042-44			
T1	Ant Matching	1042-24			
T2	RF Amp (Pri)	1042-25			
T3	RF Amp (Sec)	1042-25			
T4	11MHz Oscillator	1042-26			
T5	Balanced Mixer	1042-27			
T6	19MHz Filter	1042-28			
T7	19MHz Filter	1042-28			
T8	19MHz Filter	1042-28			
T9	1st Rec. Mixer	1042-29			
T10	1st SSB IF	1042-31			
T11	2nd SSB IF	1042-31			
T12	AM IF	1042-30			
T13	Input IF (Filter)	1042-49			
T14	Interstage IF	1042-34	16-9034	8811	
T15	Output IF	1042-35	16-9035	8812	
T16	Carrier Buffer	1042-33			
T17	Balanced Modulator	1042-32			
T18	Filter Buffer	1042-36			
T19	Xmtr. Mixer (Pri)	1042-37			
T20	Xmtr Mixer (Sec)	1042-38			
T21	Xmtr Buffer	1042-39			

FILTER CHOKE

ITEM No.	RATINGS			REPLACEMENT DATA				NOTES
	CURRENT (Measured)	DC RES.	INDUCTANCE (0 CURRENT 1000~)	MFGR. PART No.	STANCOR PART No.	THORDARSON PART No.	TRIAD PART No.	
CH	1800ma	.2	2.3mh			TR159		

TRANSFORMER (Driver)

ITEM No.	TURNS RATIO			REPLACEMENT DATA				NOTES
	PRI.	SEC. 1	SEC. 2	MFGR. PART No.	STANCOR PART No.	THORDARSON PART No.	TRIAD Part No.	
1PT	1	1CT		1042-51				

TRANSFORMER (Audio Output)

ITEM No.	IMPEDANCE		REPLACEMENT DATA				NOTES
	PRI.	SEC.	MFGR. PART No.	STANCOR PART No.	THORDARSON PART No.	TRIAD PART No.	
OPT	45CT	20	1042-52				

PARTS LIST AND DESCRIPTION (CONTINUED)

(When ordering parts, state Model, Part Number, and Description.)

SPEAKER

ITEM No.	TYPE	REPLACEMENT DATA		NOTES
		MFGR. PART No.	QUAM PART No.	
SP1	2 X 6 PM 8 ohm	1042-57	26A07Z8	

FUSE DEVICES

ITEM No.	DESCRIPTION	REPLACEMENT DATA						
		PART No.		BUSS PART No.		LITTELFUSE PART No.		WORKMAN PART No.
		DEVICE	HOLDER	DEVICE	HOLDER	DEVICE	HOLDER	DEVICE
F1	2A, Quick-Acting	1042-104	1042-103	AGC2	HDJ	312002	150145	

MISCELLANEOUS

ITEM No.	PART NAME	PART No.	NOTES
K1	Relay	1042-59	Transmit-Receive; 260 Ohms Coil Resistance
K2	Relay	1042-105	AM-SSB; 325 Ohms Coil Resistance
MF1	Ceramic Filter	1042-50	455kHz
S1	Switch	1042-64	Channel Selector
S2	Switch	1042-65	AM/USB/LSB
S3	Switch	1042-85	Blanker
S4	Switch	1042-85	PA-CB
S5	Switch	1042-85	Power
S6	Switch	1042-86	S/RF/Cal/Pwr
XF1	Crystal Filter	1042-84	7.8MHz
X1	Crystal	1042-67	11.000MHz
X2	Crystal	1042-68	11.050MHz
X3	Crystal	1042-69	11.100MHz
X4	Crystal	1042-70	11.150MHz
X5	Crystal	1042-71	11.200MHz
X6	Crystal	1042-72	11.250MHz
X7	Crystal	1042-73	8.1665MHz
X8	Crystal	1042-74	8.1765MHz
X9	Crystal	1042-75	8.1865MHz
X10	Crystal	1042-76	8.2065MHz
X11	Crystal	1042-77	8.1635MHz
X12	Crystal	1042-78	8.1735MHz
X13	Crystal	1042-79	8.1835MHz
X14	Crystal	1042-80	8.2035MHz
X15	Crystal	1042-81	7.3435MHz
X16	Crystal	1042-82	7.7985MHz
X17	Crystal	1042-83	7.8015MHz

CABINETS & CABINET PARTS (When ordering specify model, chassis & color)

ITEM	PART No.
Escutcheon	1042-221
Knob, Channel Selector	1042-236

ITEM	PART No.
Knob, Volume, Cal, RF Gain, Clarifier, Squelch, AM/USB/LSB	1042-237
Bracket, Mounting	1042-235

ACCESSORIES

ITEM	MFGR. PART No.	REMARKS
Microphone, with Hanger	1042-58	
DC Power Cord	1042-61	

WIRING DATA

General-use Hook-up Wire ..... Use BELDEN No. 8530 (Solid) Available in 12 Colors
8524 (Stranded) Available in 12 Colors
Shielded Antenna Lead ..... Use BELDEN No. 8214 Lowest-loss (RG-8/U Type)
8237 Low-loss (RG-8/U)
8240 (Solid) Miniature (RG-58/U)
8259 (Stranded) Miniature (RG-58A/U)
Coiled Microphone Cable ..... Use BELDEN No. 8497 3-Conductor,1 Shielded,for Press-to-Talk (Neoprene)
8496 3-Conductor,1 Shielded,for Press-to-Talk (Vinyl)
Ignition Noise Suppression ..... Use BELDEN No. 7300-Series Spark-Plug Sets
Bonding Strap ..... Use BELDEN No. 8661 (3/8 In.)

For Supplier Address See PHOTOFACT Index

NOTE

ONLY THOSE PERSONS PROPERLY LICENSED ARE PERMITTED TO MAKE REPAIRS OR ADJUSTMENTS WHICH MAY RESULT IN ILLEGAL OPERATION. (REFER TO FCC RULES AND REGULATIONS PART 95, SUBPARTS C & D.)

The frequency of the transmitter should be checked periodically with a secondary frequency standard to insure proper and legal operation.

Best results will be obtained when adjusting the final RF output circuit if the antenna normally used is connected and the chassis is as nearly in the cabinet as possible.

Connect either 50-ohm dummy load or the normally used antenna system.

MODEL Cobra 20

ALIGNMENT INSTRUCTIONS

Suggested Alignment Tools: GC ELECTRONICS
T1 thru T10, L3 .....#9087, 9089
T11, T12 .....#9440

RECEIVER

Connect an AC VTVM across speaker voice coil. Set SQUELCH control fully counterclockwise. Adjust VOLUME control for suitable reading. Set ANL off, SCAN off.

SIGNAL GENERATOR	CHANNEL	ADJUST	REMARKS
High side thru .01mfd to C , base of Q4 (2nd mixer), low side to B . Set to 455kHz (Mod.)	Any	T5, T4	Adjust for maximum.
High side thru .01mfd to antenna connector, low side to chassis. Set to 27.085MHz. (Mod.)	Any	T3, T2, T1	Adjust for maximum.
High side thru .01mfd to antenna connector, low side to chassis. Set to 27.085MHz. (Mod.)	Any	R17	Adjust for desired "S" meter reading.
High side thru .01mfd to antenna connector, low side to chassis. Set to 27.085MHz. (Mod.)	Any	R82	Adjust for desired squelch range.

HOWARD W. SAMS & CO., INC. Indianapolis, Indiana 46206

 3CY111

ALIGNMENT INSTRUCTIONS (Continued)

TRANSMITTER

INDICATOR	ADJUST	REMARKS
Connect an RF Wattmeter between antenna connector and dummy load.	L3, T11, T10	Key transmitter; adjust for maximum.
Connect an RF Wattmeter between antenna connector and dummy load.	T8, T7, T6	Reduce power supply voltage until RF output is about 1 watt. Adjust for equal output on all channels. Return power supply voltage to normal.
Connect an RF Wattmeter between antenna connector and dummy load. Unsolder test point H and insert 0-500ma. DC ammeter (base of RF final amp. Q27).	C60	Adjust for 5 watts input.
Connect an RF Wattmeter between antenna connector and dummy load.	R78	Adjust for desired RF meter reading.
Television (Ch. 2)	T12	Adjust for MINIMUM interference.

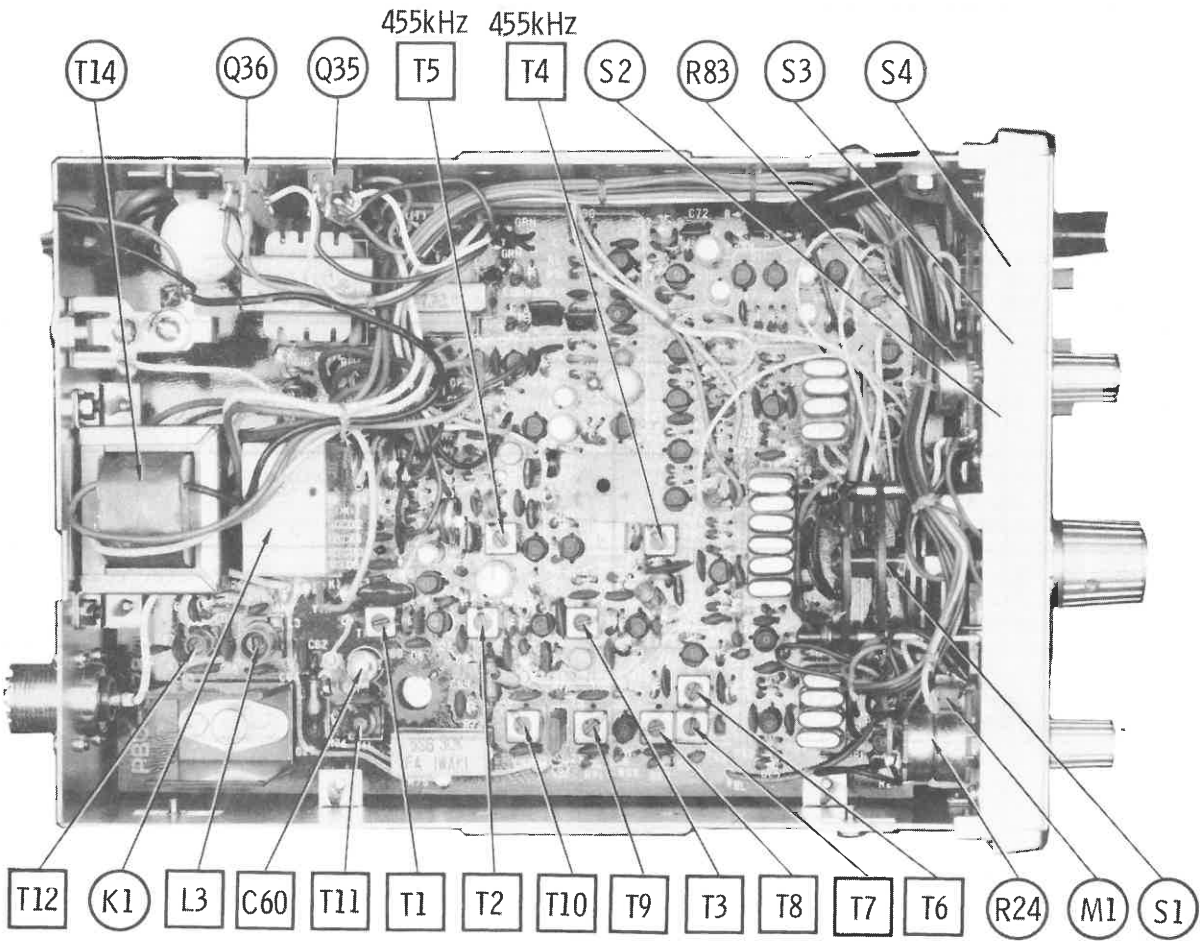

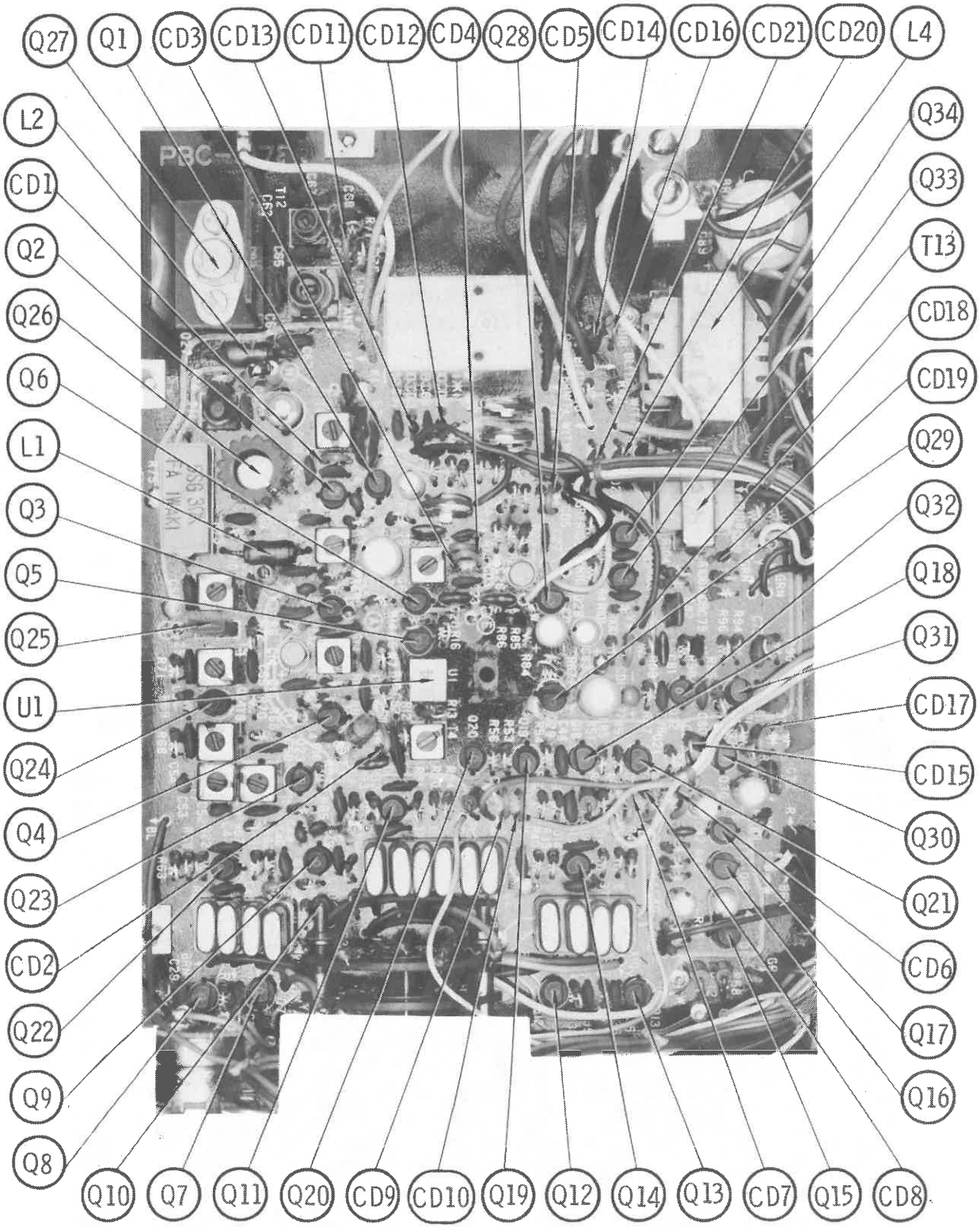
Q27
Q1
CD3
CD13
CD11
CD12
CD4
Q28
CD5
CD14
CD16
CD21
CD20
L4
L2
CD1
Q2
Q26
Q6
L1
Q3
Q5
Q25
U1
Q24
Q4
Q23
CD2
Q22
Q9
Q8
Q34
Q33
T13
CD18
CD19
Q29
Q32
Q18
Q31
CD17
CD15
Q30
Q21
CD6
Q17
Q16
Q10
Q7
Q11
Q20
CD9
CD10
Q19
Q12
Q14
Q13
CD7
Q15
CD8

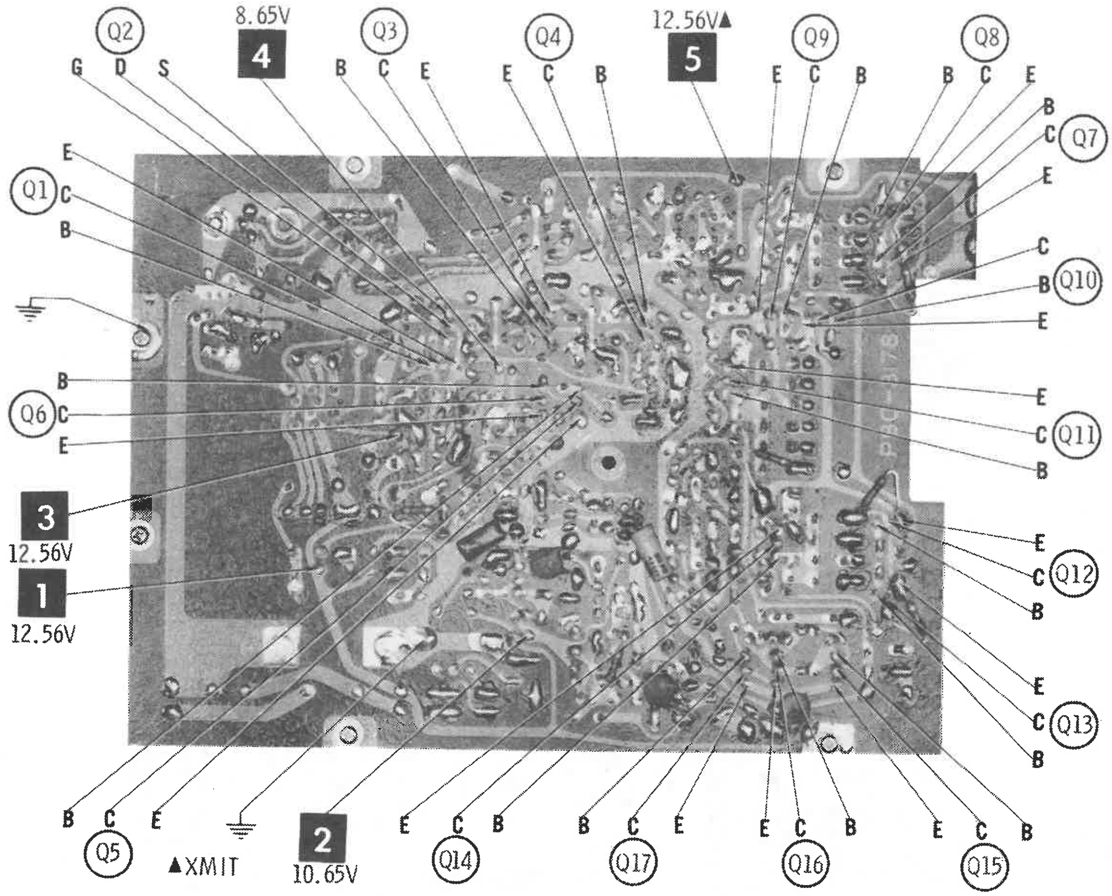

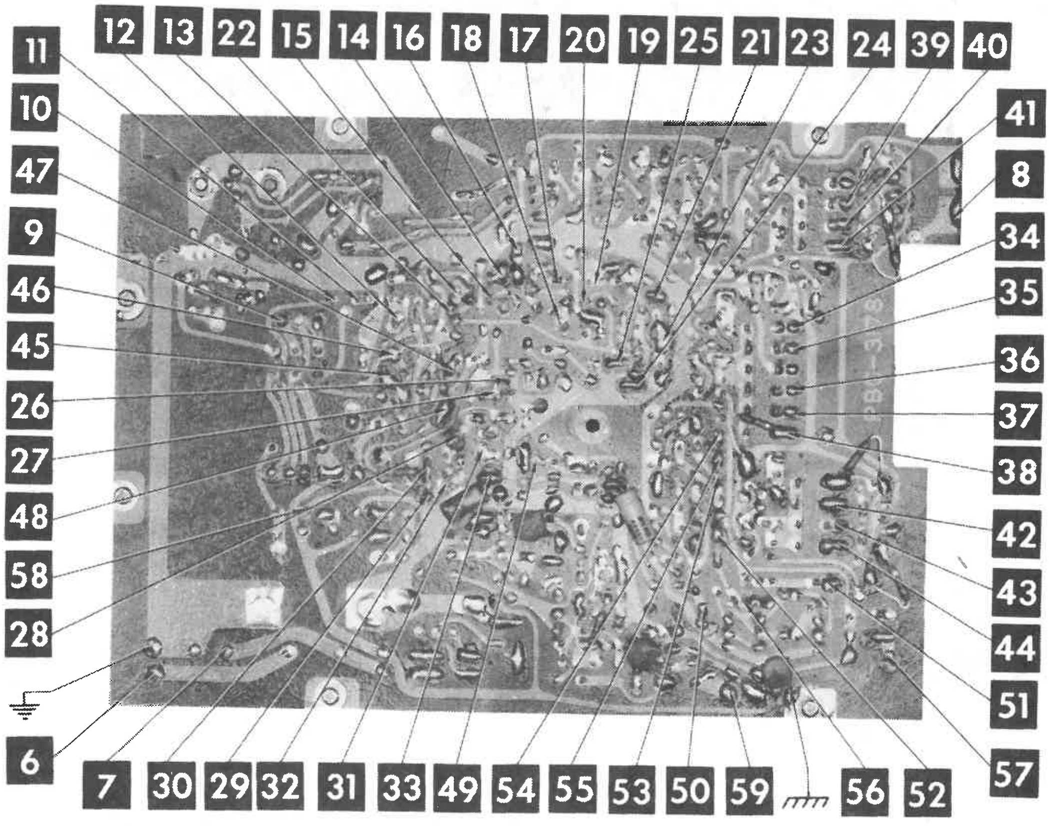

A Howard W. Sams CIRCUITRACE® **Photo**

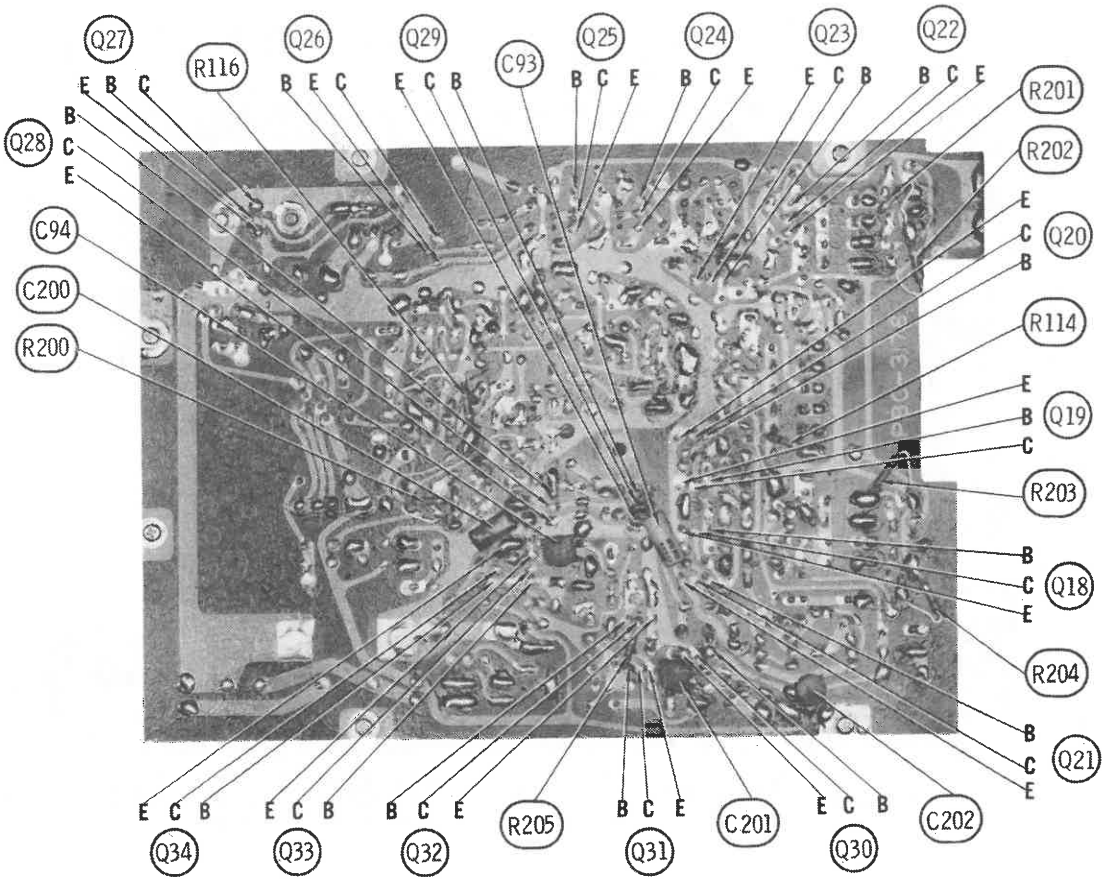

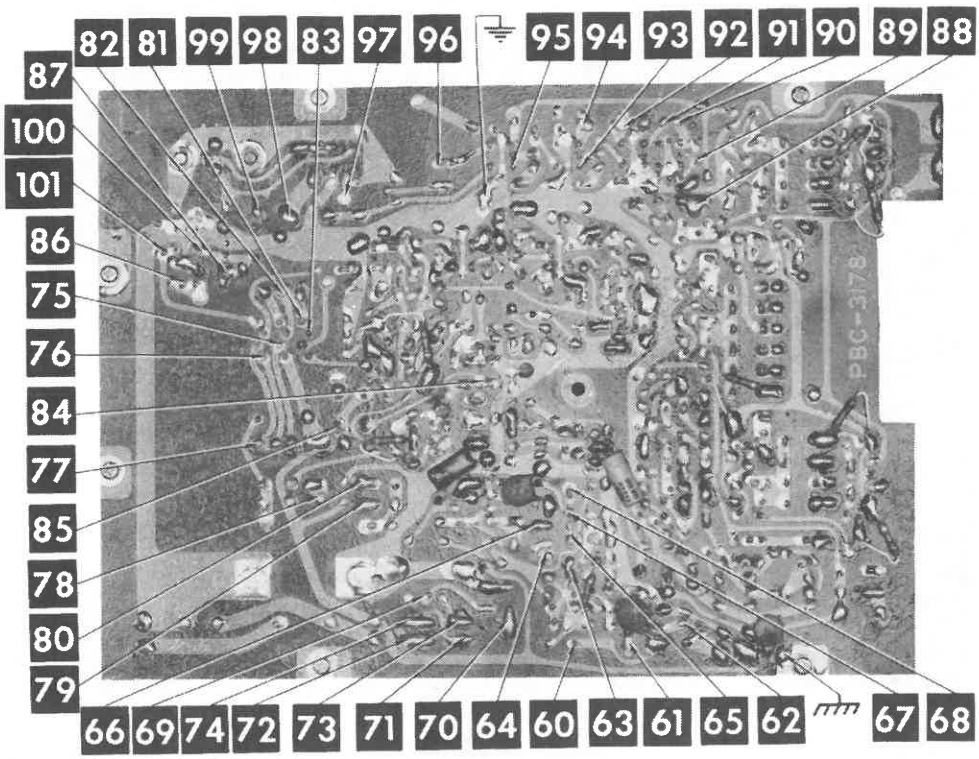

A Howard W. Sams CIRCUITRACE® Photo

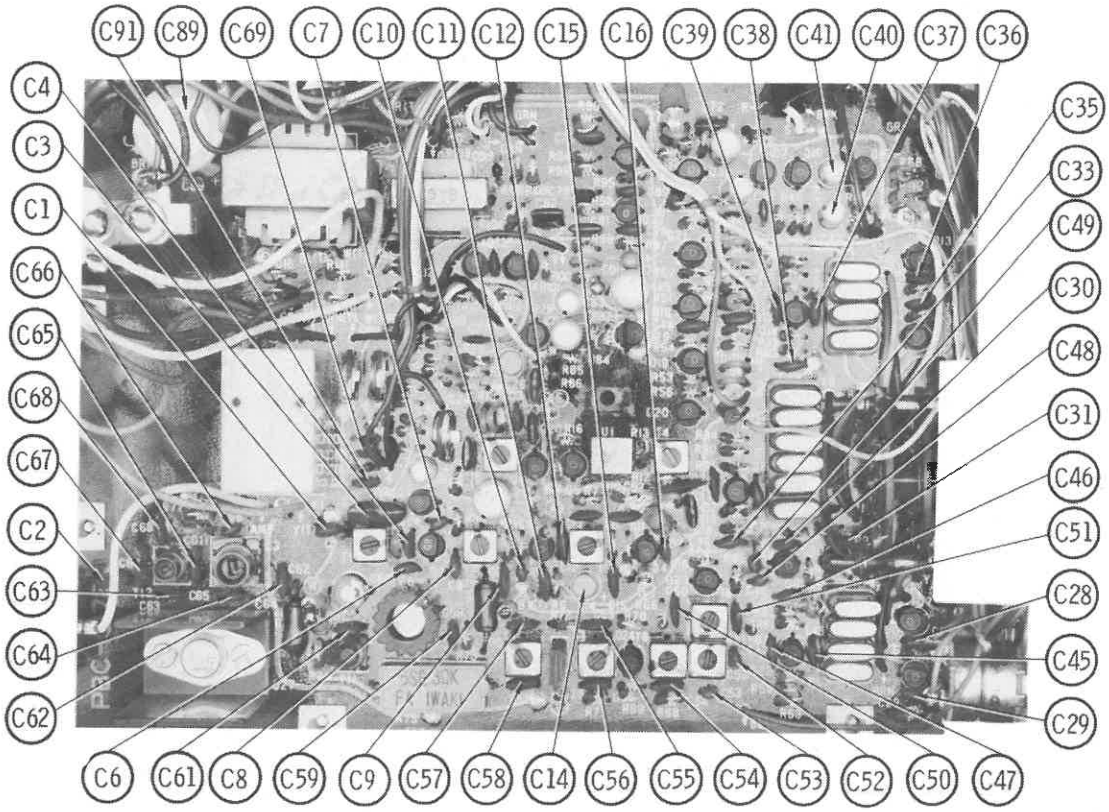
C91
C89
C69
C7
C10
C11
C12
C15
C16
C39
C38
C41
C40
C37
C36
C4
C3
C1
C66
C65
C68
C67
C2
C63
C64
C62
C35
C33
C49
C30
C48
C31
C46
C51
C28
C45
C29
C6
C61
C8
C59
C9
C57
C58
C14
C56
C55
C54
C53
C52
C50
C47

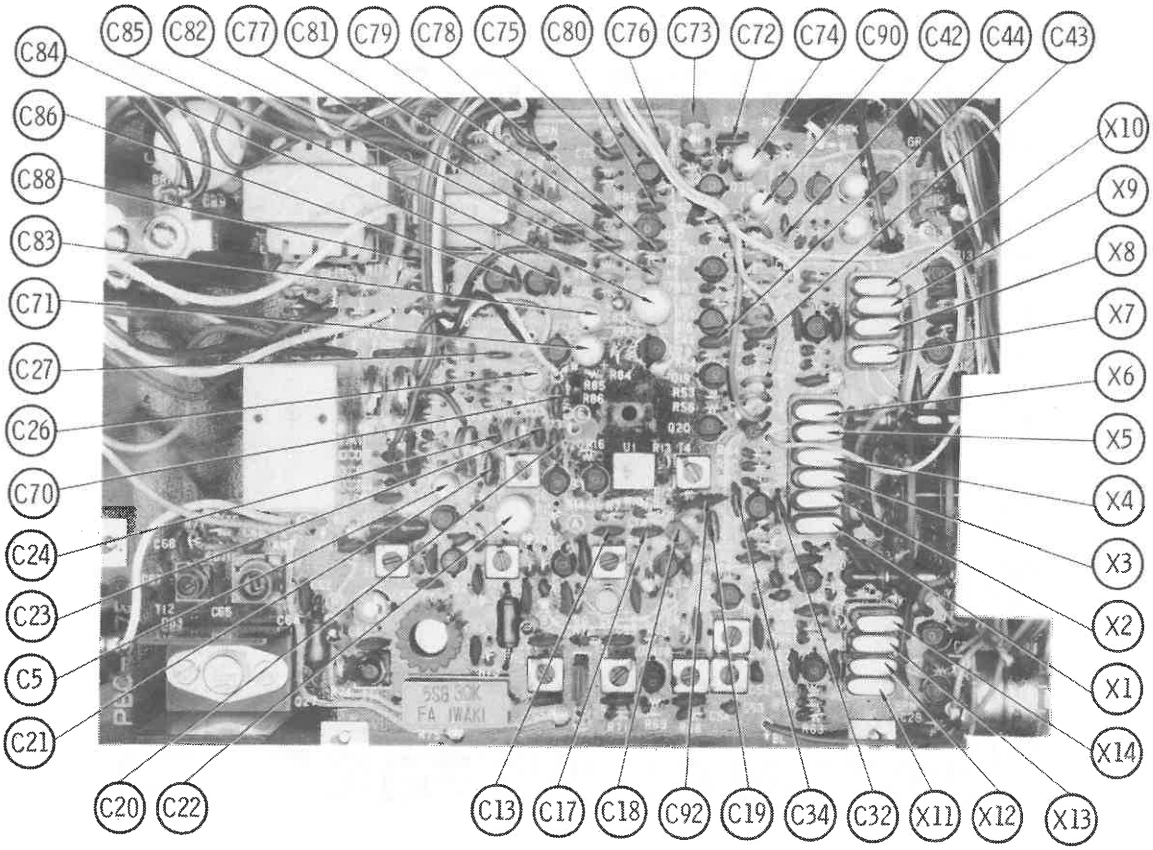
C85
C82
C77
C81
C79
C78
C75
C80
C76
C73
C72
C74
C90
C42
C44
C43
C84
C86
C88
C83
C71
C27
C26
C70
C24
C23
C5
C21
X10
X9
X8
X7
X6
X5
X4
X3
X2
X1
X14
C20
C22
C13
C17
C18
C92
C19
C34
C32
X11
X12
X13

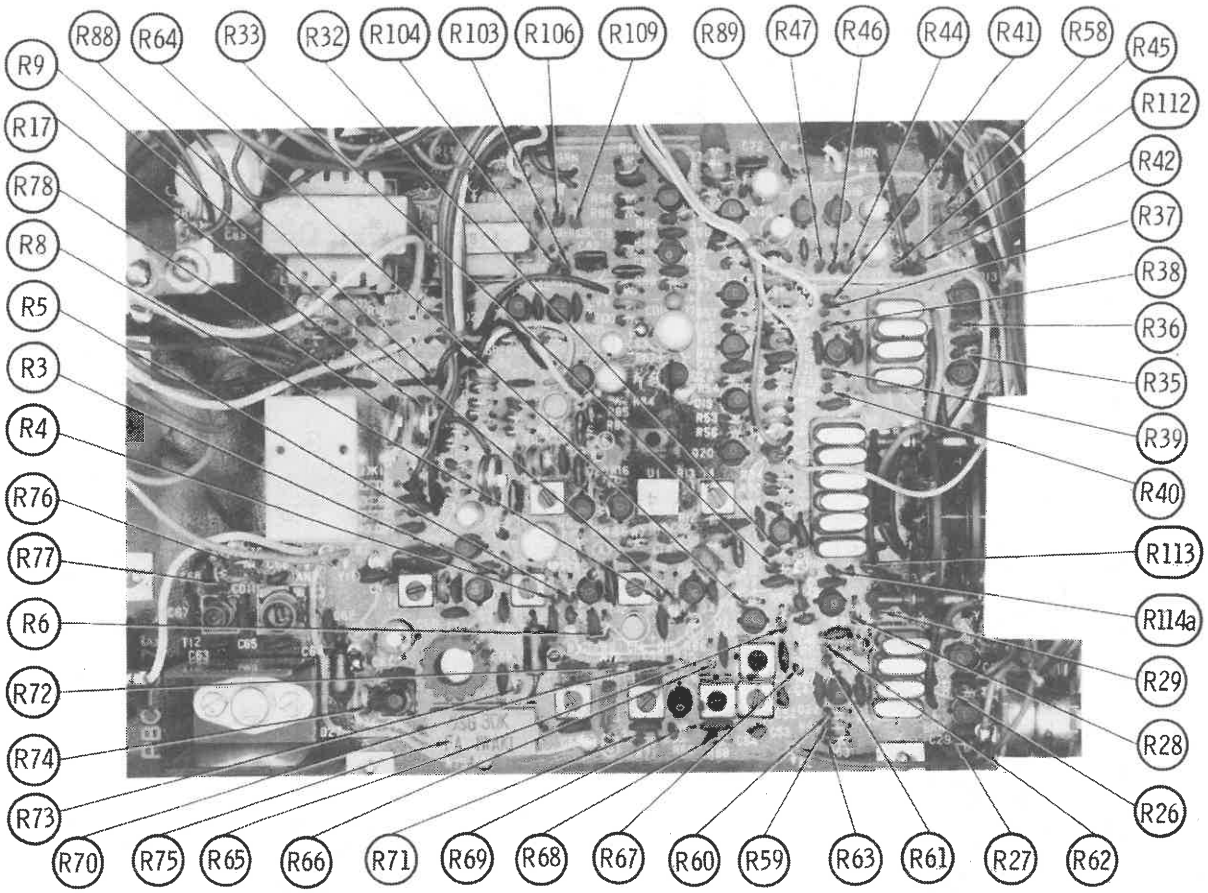
R88
R64
R33
R32
R104
R103
R106
R109
R89
R47
R46
R44
R41
R58
R45
R112
R42
R37
R38
R36
R35
R39
R40
R113
R114a
R29
R28
R26
R62
R27
R61
R63
R59
R60
R67
R68
R69
R71
R66
R65
R75
R70
R73
R74
R72
R6
R77
R76
R4
R3
R5
R8
R78
R17
R9

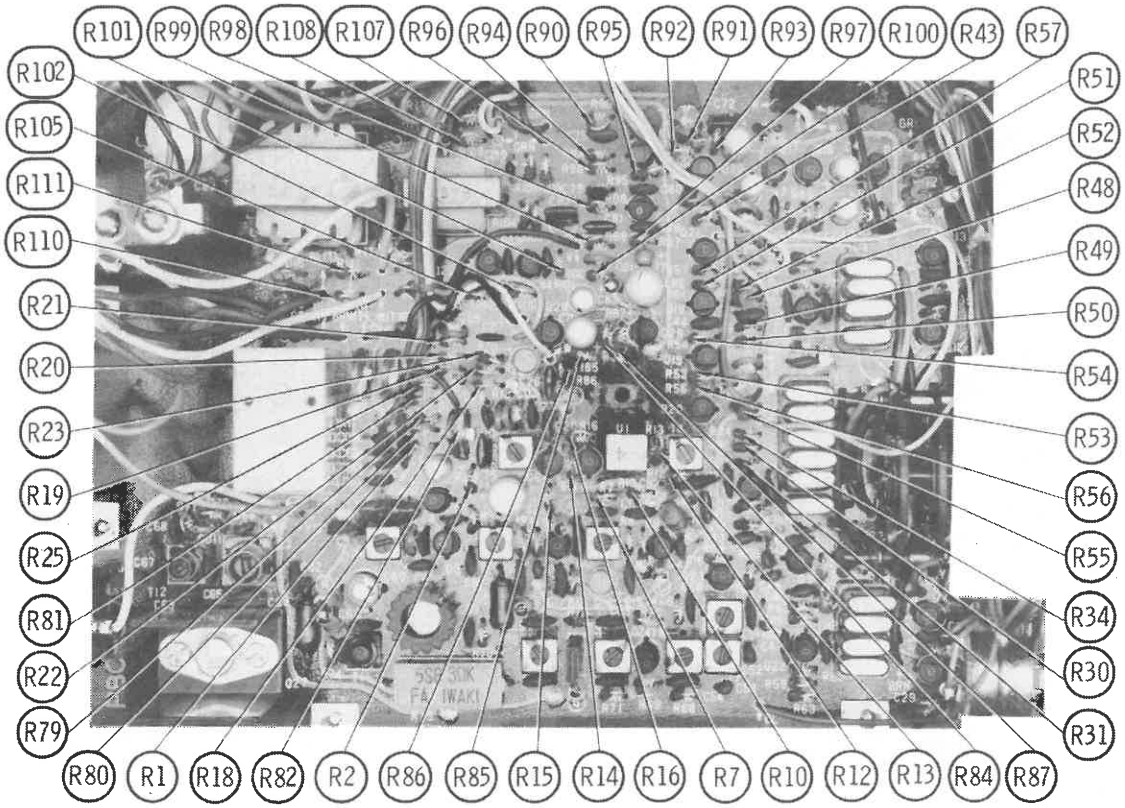
R101
R99
R98
R108
R107
R96
R94
R90
R95
R92
R91
R93
R97
R100
R43
R57
R51
R52
R48
R49
R50
R54
R53
R56
R55
R34
R30
R31
R87
R84
R13
R12
R10
R7
R16
R14
R15
R85
R86
R2
R82
R18
R1
R80
R79
R22
R81
R25
R19
R23
R20
R21
R110
R111
R105
R102

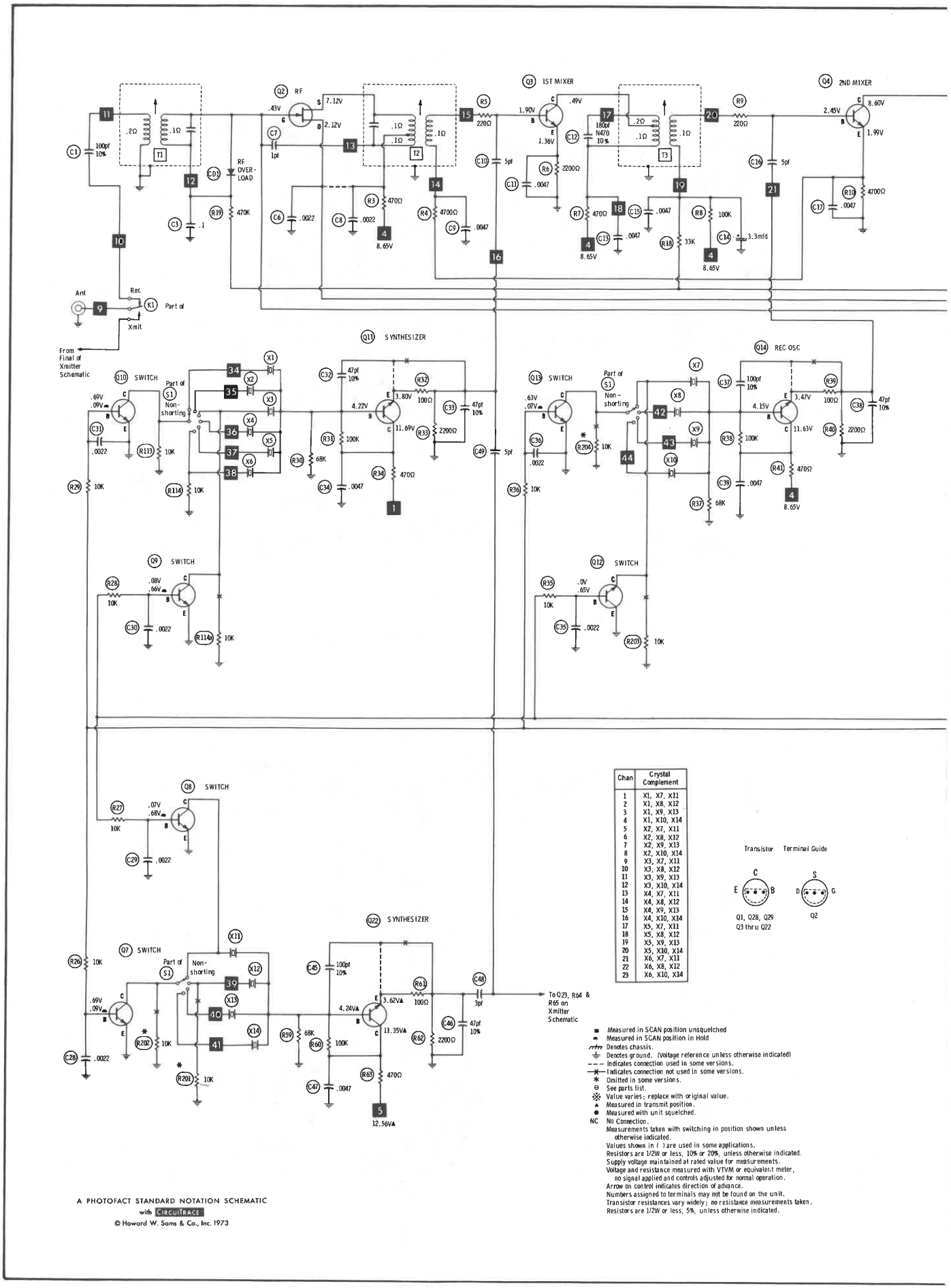

Chan	Crystal Complement
1	X1, X7, X11
2	X1, X8, X12
3	X1, X9, X13
4	X1, X10, X14
5	X2, X7, X11
6	X2, X8, X12
7	X2, X9, X13
8	X2, X10, X14
9	X3, X7, X11
10	X3, X8, X12
11	X3, X9, X13
12	X3, X10, X14
13	X4, X7, X11
14	X4, X8, X12
15	X4, X9, X13
16	X4, X10, X14
17	X5, X7, X11
18	X5, X8, X12
19	X5, X9, X13
20	X5, X10, X14
21	X6, X7, X11
22	X6, X8, X12
23	X6, X10, X14

■ Measured in SCAN position unsquelched
▬ Measured in SCAN position in Hold
Denotes chassis.
Denotes ground. (Voltage reference unless otherwise indicated)
– – – Indicates connection used in some versions.
—✱— Indicates connection not used in some versions.
✱ Omitted in some versions.
⊖ See parts list.
※ Value varies; replace with original value.
▲ Measured in transmit position.
● Measured with unit squelched.
NC No Connection.
Measurements taken with switching in position shown unless otherwise indicated.
Values shown in ( ) are used in some applications.
Resistors are 1/2W or less, 10% or 20%, unless otherwise indicated.
Supply voltage maintained at rated value for measurements.
Voltage and resistance measured with VTVM or equivalent meter, no signal applied and controls adjusted for normal operation.
Arrow on control indicates direction of advance.
Numbers assigned to terminals may not be found on the unit.
Transistor resistances vary widely; no resistance measurements taken.
Resistors are 1/2W or less, 5%, unless otherwise indicated.

A PHOTOFACT STANDARD NOTATION SCHEMATIC
with CIRCUITRACE

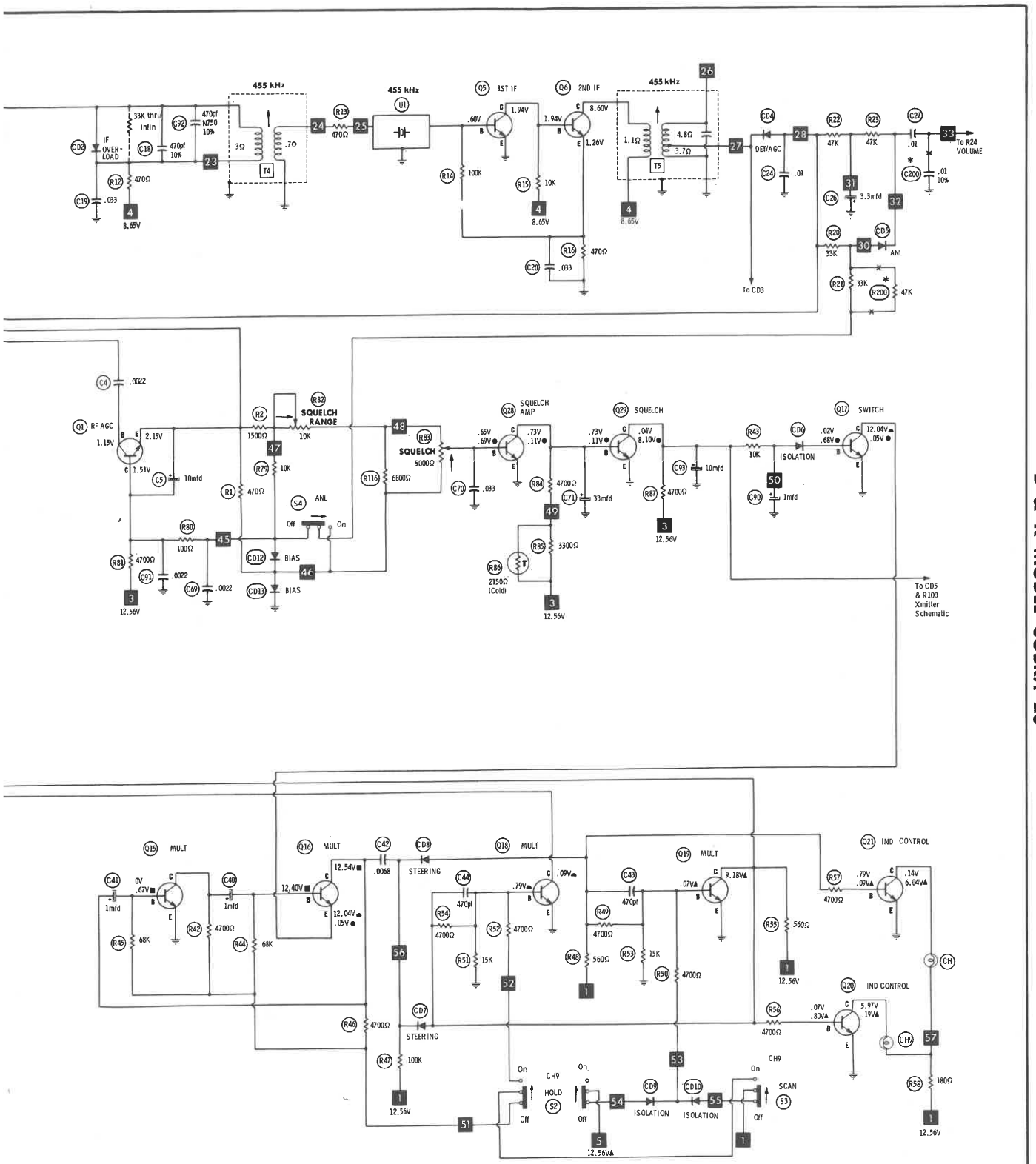
455 kHz
IF OVER-LOAD
33K thru Infin
470pf NJ750 10%
470pf 10%
3Ω
.7Ω
T4
470Ω
.033
8.65V
455 kHz
U1
470Ω
Q5 1ST IF
.60V
1.94V
100K
Q6 2ND IF
1.94V
8.60V
1.26V
10K
470Ω
.033
455 kHz
1.1Ω
4.8Ω
3.7Ω
T5
DET/AGC
To CD3
47K
47K
.01
To R24 VOLUME
.01 10%
3.3mfd
33K
ANL
33K
47K
.0022
Q1 RF AGC
1.15V
2.15V
1.51V
10mfd
1500Ω
10K
SQUELCH RANGE
10K
470Ω
ANL
Off
On
100Ω
4700Ω
.0022
.0022
BIAS
BIAS
12.56V
SQUELCH
5000Ω
6800Ω
.033
SQUELCH AMP
.65V
.69V
.73V
.11V
4700Ω
33mfd
3300Ω
2150Ω (Cold)
12.56V
SQUELCH
.73V
.11V
.04V
8.10V
4700Ω
10mfd
12.56V
10K
ISOLATION
1mfd
SWITCH
.02V
.68V
12.04V
.05V
To CD5 & R100 Xmitter Schematic
MULT
0V
.67V
1mfd
68K
4700Ω
68K
MULT
12.54V
12.40V
12.04V
.05V
.0068
STEERING
MULT
.09V
.79V
470pf
4700Ω
15K
4700Ω
STEERING
100K
12.56V
On
CH9
HOLD
S2
Off
On
Off
5
12.56V
ISOLATION
ISOLATION
On
CH9
SCAN
S3
Off
MULT
9.18V
.07V
470pf
4700Ω
560Ω
15K
4700Ω
560Ω
12.56V
IND CONTROL
.79V
.05V
.14V
6.04V
4700Ω
CH
IND CONTROL
5.97V
.19V
.07V
.80V
4700Ω
CH9
180Ω
12.56V

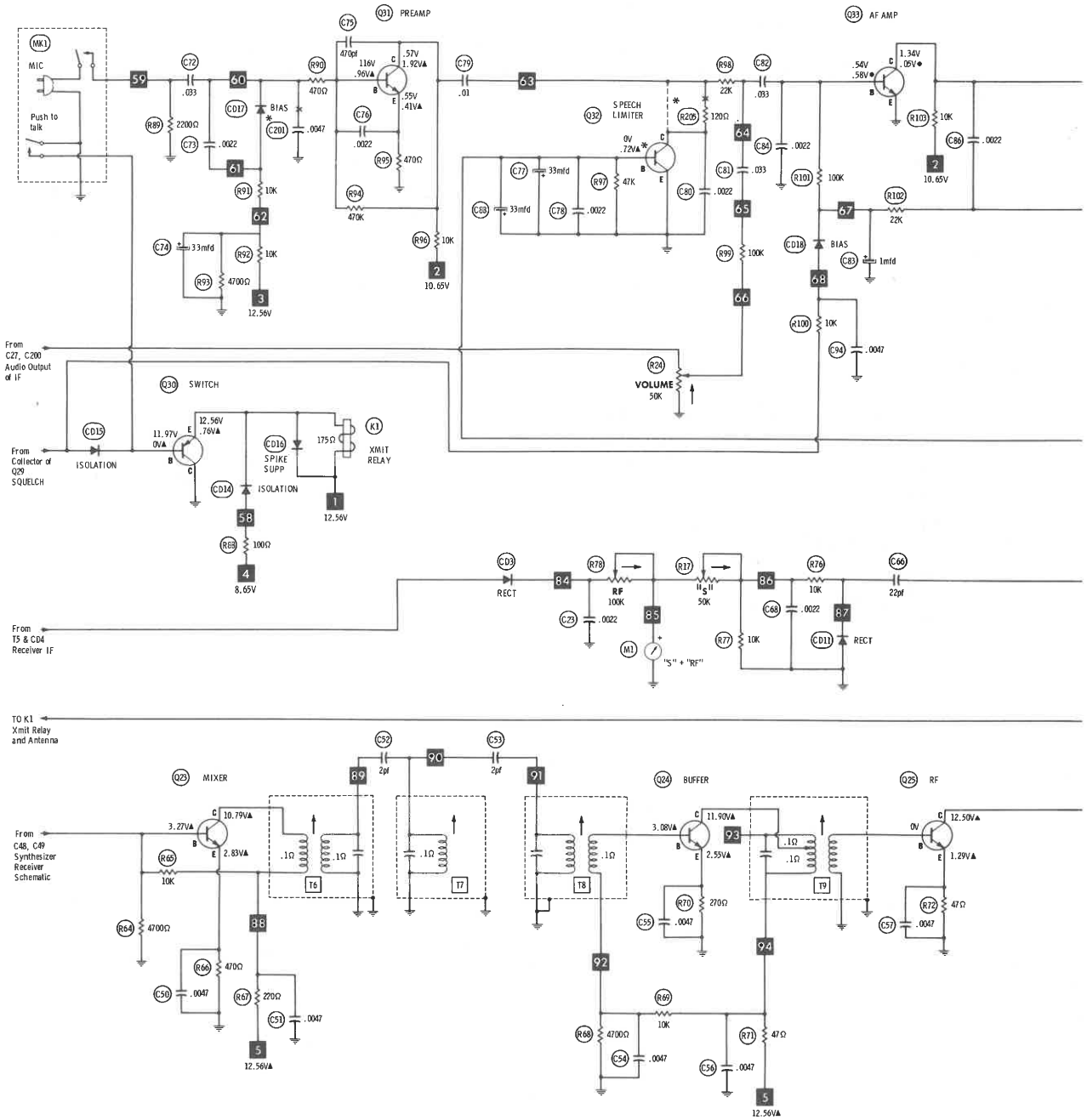

- ■ Measured in SCAN position unsquelched
- ▲ Measured in SCAN position in Hold
- Denotes chassis.
- ⏚ Denotes ground. (Voltage reference unless otherwise indicated)
- - - - Indicates connection used in some versions.
- —✕— Indicates connection not used in some versions.
- * Omitted in some versions.
- ⊖ See parts list.
- ※ Value varies; replace with original value.
- ▲ Measured in transmit position.
- ● Measured with unit squelched.
- NC No Connection.

Measurements taken with switching in position shown unless otherwise indicated.
Values shown in ( ) are used in some applications.
Resistors are 1/2W or less, 10% or 20%, unless otherwise indicated.
Supply voltage maintained at rated value for measurements.
Voltage and resistance measured with VTVM or equivalent meter, no signal applied and controls adjusted for normal operation.
Arrow on control indicates direction of advance.
Numbers assigned to terminals may not be found on the unit.
Transistor resistances vary widely; no resistance measurements taken.
Resistors are 1/2W or less, 5%, unless otherwise indicated.

Transistor Terminal Guides

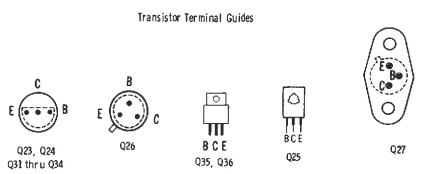

A PHOTOFACT STANDARD NOTATION SCHEMATIC
with CIRCUITRACE

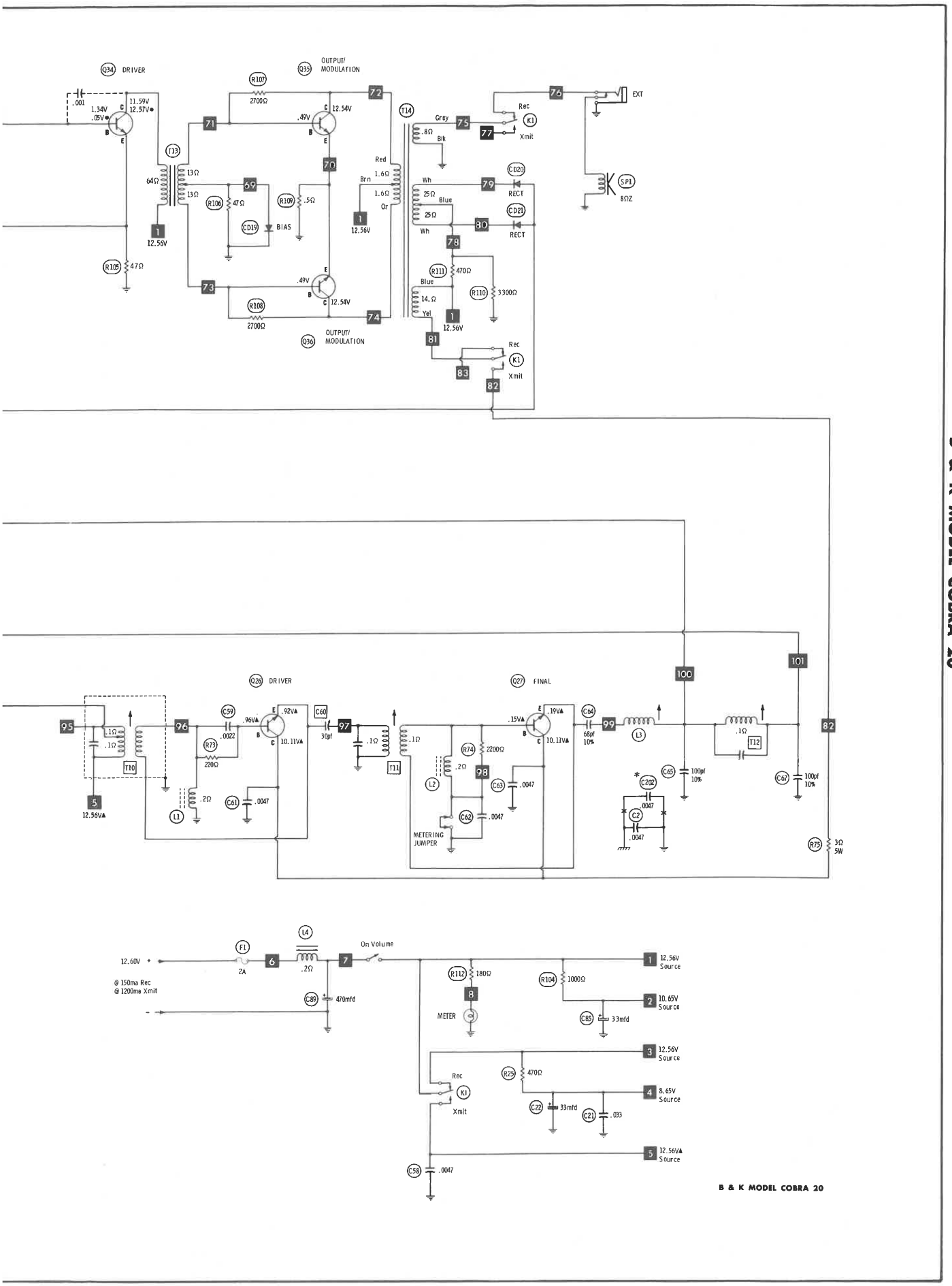

B & K MODEL COBRA 20

PARTS LIST AND DESCRIPTION

SEMICONDUCTORS *(When ordering parts, state Model, Part Number, and Description.)*

ITEM No.	TYPE / MFGR. No./PART No.	REPLACEMENT DATA						
		GENERAL ELECTRIC PART No.	INTERNATIONAL RECTIFIER PART No.	MALLORY PART No.	MOTOROLA PART No.	RCA PART No.	SPRAGUE PART No.	SYLVANIA PART No.
CD1	1S1555/ 151-030-9-001	GE-300	D200	PTC214	HEPR0600	SK3100	RT218	ECG 177
CD2	1S1555/ 151-030-9-001	GE-300	D200	PTC214	HEPR0600	SK3100	RT218	ECG 177
CD3	1S1555/ 151-030-9-001	GE-300	D200	PTC214	HEPR0600	SK3100	RT218	ECG 177
CD4	1S1555/ 151-030-9-001	GE-300	D200	PTC214	HEPR0600	SK3100	RT218	ECG 177
CD5	1S1555/ 151-030-9-001	GE-300	D200	PTC214	HEPR0600	SK3100	RT218	ECG 177
CD6	1S1555/ 151-030-9-001	GE-300	D200	PTC214	HEPR0600	SK3100	RT218	ECG 177
CD7	1S1555/ 151-030-9-001	GE-300	D200	PTC214	HEPR0600	SK3100	RT218	ECG 177
CD8	1S1555/ 151-030-9-001	GE-300	D200	PTC214	HEPR0600	SK3100	RT218	ECG 177
CD9	1S1555/ 151-030-9-001	GE-300	D200	PTC214	HEPR0600	SK3100	RT218	ECG 177
CD10	1S1555/ 151-030-9-001	GE-300	D200	PTC214	HEPR0600	SK3100	RT218	ECG 177
CD11	1S1555/ 151-030-9-001	GE-300	D200	PTC214	HEPR0600	SK3100	RT218	ECG 177
CD12	S3016R/ 151-030-9-006	GE-300	D200	PTC214	HEPR0600	SK3100	RT218	ECG 177
CD13	S3016R/ 151-030-9-006	GE-300	D200	PTC214	HEPR0600	SK3100	RT218	ECG 177
CD14	1S1885/ 151-030-9-005	GE-504A	8D4	PTC201	HEPR0052	SK3030	RT213	ECG 116
CD15	1S1885/ 151-030-9-005	GE-504A	8D4	PTC201	HEPR0052	SK3030	RT213	ECG 116
CD16	1S1885/ 151-030-9-005	GE-504A	8D4	PTC201	HEPR0052	SK3030	RT213	ECG 116
CD17	1S1555/ 151-030-9-001	GE-300	D200	PTC214	HEPR0600	SK3100	RT218	ECG 177
CD18	1S1555/ 151-030-9-001	GE-300	D200	PTC214	HEPR0600	SK3100	RT218	ECG 177
CD19	S3016R/ 151-030-9-006	GE-300	D200	PTC214	HEPR0600	SK3100	RT218	ECG 177
CD20	1S1885/ 151-030-9-005	GE-504A	8D4	PTC201	HEPR0052	SK3030	RT213	ECG 116
CD21	1S1885/ 151-030-9-005	GE-504A	8D4	PTC201	HEPR0052	SK3030	RT213	ECG 116
Q1	2SC372(0)/ 176-029-9-001	GE-20	TR-24	PTC139	HEP724	SK3038	RT102	ECG 123A
Q2	2SK19(GR)/ 182-009-9-001	GE-FET-2	FE-100	PTC152	HEPF0021	SK3116	RT175	ECG 132
Q3	2SC372(0)/ 176-029-9-001	GE-20	TR-24	PTC139	HEP724	SK3038	RT102	ECG 123A
Q4	2SC372(0)/ 176-029-9-001	GE-20	TR-24	PTC139	HEP724	SK3038	RT102	ECG 123A
Q5	2SC372(0)/ 176-029-9-001	GE-20	TR-24	PTC139	HEP724	SK3038	RT102	ECG 123A
Q6	2SC372(0)/ 176-029-9-001	GE-20	TR-24	PTC139	HEP724	SK3038	RT102	ECG 123A
Q7	2SC372(0)/ 176-029-9-001	GE-20	TR-24	PTC139	HEP724	SK3038	RT102	ECG 123A
Q8	2SC372(0)/ 176-029-9-001	GE-20	TR-24	PTC139	HEP724	SK3038	RT102	ECG 123A
Q9	2SC372(0)/ 176-029-9-001	GE-20	TR-24	PTC139	HEP724	SK3038	RT102	ECG 123A
Q10	2SC372(0)/ 176-029-9-001	GE-20	TR-24	PTC139	HEP724	SK3038	RT102	ECG 123A
Q11	2SC372(0)/ 176-029-9-001	GE-20	TR-24	PTC139	HEP724	SK3038	RT102	ECG 123A
Q12	2SC372(0)/ 176-029-9-001	GE-20	TR-24	PTC139	HEP724	SK3038	RT102	ECG 123A
Q13	2SC372(0)/ 176-029-9-001	GE-20	TR-24	PTC139	HEP724	SK3038	RT102	ECG 123A
Q14	2SC372(0)/ 176-029-9-001	GE-20	TR-24	PTC139	HEP724	SK3038	RT102	ECG 123A
Q15	2SC372(0)/ 176-029-9-001	GE-20	TR-24	PTC139	HEP724	SK3038	RT102	ECG 123A
Q16	2SC372(0)/ 176-029-9-001	GE-20	TR-24	PTC139	HEP724	SK3038	RT102	ECG 123A
Q17	2SC372(0)/ 176-029-9-001	GE-20	TR-24	PTC139	HEP724	SK3038	RT102	ECG 123A
Q18	2SC372(0)/ 176-029-9-001	GE-20	TR-24	PTC139	HEP724	SK3038	RT102	ECG 123A
Q19	2SC372(0)/ 176-029-9-001	GE-20	TR-24	PTC139	HEP724	SK3038	RT102	ECG 123A
Q20	2SC372(0)/ 176-029-9-001	GE-20	TR-24	PTC139	HEP724	SK3038	RT102	ECG 123A
Q21	2SC372(0)/ 176-029-9-001	GE-20	TR-24	PTC139	HEP724	SK3038	RT102	ECG 123A
Q22	2SC372(0)/ 176-029-9-001	GE-20	TR-24	PTC139	HEP724	SK3038	RT102	ECG 123A
Q23	2SC372(0)/ 176-029-9-001	GE-20	TR-24	PTC139	HEP724	SK3038	RT102	ECG 123A
Q24	2SC372(0) 176-029-9-001	GE-20	TR-24	PTC139	HEP724	SK3038	RT102	ECG 123A
Q25	2SC495(0)/ 176-029-9-004	GE-20	TR-24	PTC139	HEP724	SK3038	RT102	ECG 123A

PARTS LIST AND DESCRIPTION (CONTINUED)

(When ordering parts, state Model, Part Number, and Description.)

SEMICONDUCTORS (cont)

ITEM No.	TYPE / MFGR. No./PART No.	REPLACEMENT DATA						
		GENERAL ELECTRIC PART No.	INTERNATIONAL RECTIFIER PART No.	MALLORY PART No.	MOTOROLA PART No.	RCA PART No.	SPRAGUE PART No.	SYLVANIA PART No.
Q26	2SC482(Y)/ 176-029-9-002		IRTR-65		HEP75	SK3048		ECG 195
Q27	2SC517/ 172-009-9-001				HEPS3001	SK3049		ECG 224
Q28	2SC372(O)/ 176-029-9-001	GE-20	TR-24	PTC139	HEP724	SK3048	RT102	ECG 123A
Q29	2SC372(O)/ 176-029-9-001	GE-20	TR-24	PTC139	HEP724	SK3048	RT102	ECG 123A
Q30	2SA562(O)/ 177-006-9-002	GE-67	TR-28	PTC127	HEP242	SK3025	RT115	ECG 129
Q31	2SC732(BL)/ 176-031-9-002	GE-62	IRTR-51	PTC123	HEP730			ECG 199
Q32	2SA495(O)/ 177-006-9-001	GE-21	TR-30	PTC103	HEP715	SK3114	RT115	ECG 159
Q33	2SC732(BL)/ 176-031-9-002	GE-62	IRTR-51	PTC123	HEP730			ECG 199
Q34	2SC735(O)/ 176-031-9-001	GE-18	TR-21		HEP243	SK3020	RT156	ECG 128
Q35	2SD235(Y)/ 172-010-9-001	GE-28	IRTR-92	PTC110	HEPS3023	SK3054	RT154	ECG 152
Q36	2SD235(Y)/ 172-010-9-001	GE-28	IRTR-92	PTC110	HEPS3023	SK3054	RT154	ECG 186

ELECTROLYTIC CAPACITORS

ITEM No.	RATING		REPLACEMENT DATA					
			MFGR. PART No.	ARCO PART No.	CENTRALAB PART No.	CORNELL-DUBILIER PART No.	MALLORY PART No.	SPRAGUE PART No.
C5	10	16V	022-076-9-003	RME-B-E-010	EP15-10	PC10-25	VTT10A25	EV-1222
C14	3.3	16V	022-076-9-002	RME-A-H-003	EP30-5	WBR5-50	VTT3R3A50	EV-1618
C22	33	16V	022-076-9-005	ME-3-E-035	EP15-25	PC30-25	MTV30CB25	EV-1325
C40	1	16V	022-076-9-001	RME-A-H-003	EP30-5	WBR5-50	VTT3R3A50	EV-1618
C40	1	16V	022-076-9-001	RME-A-E-001	EP15-2	PC1-50	MTV1CB50	EV-1315
C41	1	16V	022-076-9-001	RME-A-E-001	EP15-2	PC1-50	MTV1CB50	EV-1315
C71	33	6.3V	022-076-9-004	ME-3-D-035	EP15-25	PC30-25	VTT33A10	EV-1125
C74	33	6.3V	022-076-9-004	ME-3-D-035	EP15-25	PC30-25	VTT33A10	EV-1125
C77	33	3V	027-005-9-001			TYR13BB336K	TDC336M010FL	SD6-339
C83	1	16V	022-076-9-001	RME-A-E-001	EP15-2	PC1-50	MTV1CB50	EV-1315
C85	33	16V	022-076-9-005	ME-3-E-035	EP15-25	PC30-25	MTV30CB25	EV-1325
C88	33	3V	027-005-9-001			TYR13BB336K	TDC336M010FL	SD6-339
C89	470	25V	022-076-9-007	RME-N-G-500		WBR500-25	TC2505C	EV-1350
C90	1	16V	022-076-9-001	RME-A-E-001	EP15-2	PC1-50	MTV1CB50	EV-1315
C93	10	16V	022-076-9-003	RME-B-E-010	EP15-10	PC10-25	VTT10A25	EV-1222

* Not normally in distributor's stock. Availble thru distributor on order to manufacturer.

CAPACITORS

ITEM No.	RATING		MFGR. PART No.	REPLACEMENT DATA				
				ARCO/ELMENCO PART No.	CENTRALAB PART No.	CORNELL-DUBILIER PART No.	MALLORY PART No.	SPRAGUE PART No.
C1	100	10%		CCT0-101	DTZ-100	NP0100	CN0310	10TCC-T10
C2	.0047			CCD-502	CK-502	MGP005	TA250	TG-D50
C3	.1	50V		1DP-2-104			EWF05010	431P1049R5
C4	.0022			CCD-202	DD-202	GP2000	GP220	2SS-D20
C6	.0022			CCD-202	DD-202	GP2000	GP220	2SS-D20
C7	1						CN0510	10TCC-V10
C8	.0022			CCD-202,	DD-202	GP2000	GP220	2SS-D20
C9	.0047			CCD-502	CK-502	MGP005	TA250	TG-D50
C10	5					NP05		10TCC-V50
C11	.0047			CCD-502	CK-502	MGP005	TA250	TG-D50
C12	180 N470	10%	020-088-9-005	*			*	10TCT-T18
C13	.0047			CCD-502	CK-502	MGP005	TA250	TG-D50
C15	.0047			CCD-502	CK-502	MGP005	TA250	TG-D50
C16	5					NP05		10TCC-V50

PARTS LIST AND DESCRIPTION (CONTINUED)

(When ordering parts, state Model, Part Number, and Description.)

CAPACITORS (cont)

ITEM No.	RATING			MFGR. PART No.	REPLACEMENT DATA				
					ARCO/ELMENCO PART No.	CENTRALAB PART No.	CORNELL-DUBILIER PART No.	MALLORY PART No.	SPRAGUE PART No.
C17	.0047				CCD-502	CK-502	MGP005	TA250	TG-D50
C18	470	50V	10%		DM-16-471	CPR-470J	CD15F471J500	SX347	MS-347
C19	.033	50V			1DP-1-333			EWF1A133	1PB-S33
C20	.033	50V			1DP-1-333			EWF1A133	1PB-S33
C21	.033	50V			1DP-1-333			EWF1A133	1PB-S33
C23	.0022				CCD-202	DD-202	GP2000	GP220	2SS-D20
C24	.01	50V			1DP-1-103			EWF1A110	1PB-S10
C27	.01	50V			1DP-1-103			EWF1A110	1PB-S10
C28	.0022				CCD-202	DD-202	GP2000	GP220	2SS-D20
C29	.0022				CCD-202	DD-202	GP2000	GP220	2SS-D20
C30	.0022				CCD-202	DD-202	GP2000	GP220	2SS-D20
C31	.0022				CCD-202	DD-202	GP2000	GP220	2SS-D20
C32	47		10%		CCTO-470	DTZ-47	NP047	CN0447	10TCC-Q47
C33	47		10%		CCTO-470	DTZ-47	NP047	CN0447	10TCC-Q47
C34	.0047				CCD-502	CK-502	MGP005	TA250	TG-D50
C35	.0022				CCD-202	DD-202	GP2000	GP220	2SS-D20
C36	.0022				CCD-202	DD-202	GP2000	GP220	2SS-D20
C37	100		10%		CCTO-101	DTZ-100	NP0100	CN0310	10TCC-T10
C38	47		10%		CCTO-470	DTZ-47	NP047	CN0447	10TCC-Q47
C39	.0047				CCD-502	CK-502	MGP005	TA250	TG-D50
C42	.0068	50V			1DP-1-682			EWF1A268	1PB-D68
C43	470				CCD-471	DD-471	GP470	GP347	10TS-T47
C44	470				CCD-471	DD-471	GP470	GP347	10TS-T47
C45	100		10%		CCTO-101	DTZ-100	NP0100	CN0310	10TCC-T10
C46	47		10%		CCTO-470	DTZ-47	NP047	CN0447	10TCC-Q47
C47	.0047				CCD-502	CK-502	MGP005	TA250	TG-D50
C48	3								10TCC-V30
C49	5						NP05		10TCC-V50
C50	.0047				CCD-502	CK-502	MGP005	TA250	TG-D50
C51	.0047				CCD-502	CK-502	MGP005	TA250	TG-D50
C52	2					DTZ-2R2	NP02P2	CN0522	10TCC-V22
C53	2					DTZ-2R2	NP02P2	CN0522	10TCC-V22
C54	.0047				CCD-502	CK-502	MGP005	TA250	TG-D50
C55	.0047				CCD-502	CK-502	MGP005	TA250	TG-D50
C56	.0047				CCD-502	CK-502	MGP005	TA250	TG-D50
C57	.0047				CCD-502	CK-502	MGP005	TA250	TG-D50
C58	.0047				CCD-502	CK-502	MGP005	TA250	TG-D50
C59	.0022				CCD-202	DD-202	GP2000	GP220	2SS-D20
C60	30			020-088-9-010					
C61	.0047				CCD-502	CK-502	MGP005	TA250	TG-D50
C62	.0047				CCD-502	CK-502	MGP005	TA250	TG-D50
C63	.0047				CCD-502	CK-502	MGP005	TA250	TG-D50
C64	68		10%			DTZ-68		CN0468	10TCC-Q68
C65	100		10%		CCTO-101	DTZ-100	NP0100	CN0310	10TCC-T10
C66	22				CCTO-220	DTZ-22	NP022	CN0422	10TCC-Q22
C67	100		10%		CCTO-101	DTZ-100	NP0100	CN0310	10TCC-T10
C68	.0022				CCD-202	DD-202	GP2000	GP220	2SS-D20
C69	.0022				CCD-202	DD-202	GP2000	GP220	2SS-D20
C70	.033	50V			1DP-1-333			EWF1A133	1PB-S33
C72	.033	50V			1DP-1-333			EWF1A133	1PB-S33
C73	.0022				CCD-202	DD-202	GP2000	GP220	2SS-D20
C75	470				CCD-471	DD-471	GP470	GP347	10TS-T47
C76	.0022				CCD-202	DD-202	GP2000	GP220	2SS-D20
C78	.0022				CCD-202	DD-202	GP2000	GP220	2SS-D20
C79	.01	50V			1DP-1-103			EWF1A110	1PB-S10
C80	.0022				CCD-202	DD-202	GP2000	GP220	2SS-D20
C81	.033	50V			1DP-1-333			EWF1A133	1PB-S33
C82	.033	50V			1DP-1-333			EWF1A133	1PB-S33
C84	.0022				CCD-202	DD-202	GP2000	GP220	2SS-D20
C86	.0022				CCD-202	DD-202	GP2000	GP220	2SS-D20
C91	.0022				CCD-202	DD-202	GP2000	GP220	2SS-D20
C92	470	N750	10%		CCTN-471		N470		10TCU-T47
C94	.0047				CCD-502	CK-502	MGP005	TA250	TG-D50
C200	.01	50V	10%		1DP-1-103			EWF1A110	1PB-S10
C201	.0047				CCD-502	CK-502	MGP005	TA250	TG-D50
C202	.0047				CCD-502	CK-502	MGP005	TA250	TG-D50

CONTROLS (All wattages 1/2 watt, or less, unless listed)

ITEM No.	FUNCTION	RESIST-ANCE	REPLACEMENT DATA				
			MFGR. PART No.	CENTRALAB PART No.	CLAROSTAT PART No.	CTS—IRC PART No.	MALLORY PART No.
R17	"S" Meter Adjust	50K	008-158-9-008	TSV-50K(1) or T-50K(1)	C-503(1)	X201R503B(1)	MTC54L1(1)
R24	Volume/Switch	50K	008-158-9-007				
R78	"RF" Meter Adjust	100K	008-158-9-003	TSV-100K(1)or T-100K(1)	C-104(1)	X201R104B(1)	MTC15L1(1)
R82	Squelch Range	10K	008-165-9-001	TSV-10K(1) or T-10K(1)	C-103(1)	X201R103B(1)	MTC14L1(1)
R83	Squelch	5000	008-158-9-005				

(1) Cut off one of the end terminals and bend to fit PC board.

PARTS LIST AND DESCRIPTION (CONTINUED)

(When ordering parts, state Model, Part Number, and Description.)

RESISTORS (Power and Special)

ITEM No.	RATING	REPLACEMENT DATA	
		WORKMAN PART No.	MFGR. PART No.
R75	3, 5W, WW		066-005-5-030
R86	2150 (Cold)		004-099-9-002

ITEM No.	RATING	REPLACEMENT DATA	
		WORKMAN PART No.	MFGR. PART No.
R109	.5, 1/4W		004-100-9-001

COILS (RF-IF)

ITEM No.	USE	REPLACEMENT DATA			
		PART No.	MEISSNER PART No.	MILLER PART No.	WORKMAN PART No.
L1	RF Choke (13uh)	042-009-9-001	19-2018	4624	T862
L2	RF Choke (13uh)	042-009-9-001	19-2018	4624	T862
L3	RF Output	044-025-9-002			
T1	Ant. Matching	066-013-9-001			
T2	RF Amp	066-013-9-002			
T3	1st Mixer	066-013-9-003			
T4	Input IF	060-014-9-005	16-9033	8810	
T5	Output IF	060-014-9-004	16-9034	8811	
T6	Xmtr. Mixer (Pri.)	066-013-9-006			
T7	Xmtr. Mixer (Sec.)	066-013-9-007			
T8	Xmtr. Mixer (Ter.)	066-013-9-008			
T9	Xmtr. Buffer	066-013-9-009			
T10	Xmtr. Buffer	066-013-9-009			
T11	Xmtr. Driver	066-013-9-010			
T12	RF Filter	066-013-9-011			

FILTER CHOKE

ITEM No.	RATINGS			REPLACEMENT DATA				NOTES
	CURRENT (Measured)	DC RES.	INDUCTANCE (0 CURRENT 1000~)	MFGR. PART No.	STANCOR PART No.	THORDARSON PART No.	TRIAD PART No.	
L4	1200ma	.2	2.2mh	042-009-9-002				

TRANSFORMER (Driver)

ITEM No.	TURNS RATIO			REPLACEMENT DATA				NOTES
	PRI.	SEC. 1	SEC. 2	MFGR. PART No.	STANCOR PART No.	THORDARSON PART No.	TRIAD Part No.	
T13	2	1CT		068-005-9-001	TA38	TR5		

TRANSFORMER (Audio Output)

ITEM No.	IMPEDANCE		REPLACEMENT DATA				NOTES
	PRI.	SEC.	MFGR. PART No.	STANCOR PART No.	THORDARSON PART No.	TRIAD PART No.	
T14	32CT	8	061-019-001				
		SEC. 2					
		DC Resistance 1.4 ohms					
		SEC. 3					
		DC Resistance 50CT					

PARTS LIST AND DESCRIPTION (CONTINUED)

(When ordering parts, state Model, Part Number, and Description.)

SPEAKER

ITEM No.	TYPE	REPLACEMENT DATA		NOTES
		MFGR. PART No.	QUAM PART No.	
SP1	2-1/2" PM, 8 ohms	580-009-9-001		

FUSE DEVICES

ITEM No.	DESCRIPTION	REPLACEMENT DATA						
		PART No.		BUSS PART No.		LITTELFUSE PART No.		WORKMAN PART No.
		DEVICE	HOLDER	DEVICE	HOLDER	DEVICE	HOLDER	DEVICE
F1	2A, Quick-Acting	191-251-3-002	742-013-9-001	AGC2	HDJ	312002	150145	

MISCELLANEOUS

ITEM No.	PART NAME	PART No.	NOTES
K1	Relay	441-006-9-001	Coil Resistance 175 ohms
M1	Meter	320-035-9-001	PWR/S
MK1	Microphone	562-005-9-001	
S1	Switch	083-121-9-001	Channel Selector
S2	Switch	084-025-9-001	Hold
S3	Switch	084-025-9-001	Scan
S4	Switch	084-025-9-001	ANL
U1	Ceramic Filter	140-006-9-001	455kHz.
X1	Crystal	133-002-9-001	16.965MHz
X2	Crystal	133-002-9-002	17.015MHz
X3	Crystal	133-002-9-003	17.065MHz
X4	Crystal	133-002-9-004	17.115MHz
X5	Crystal	133-002-9-005	17.165MHz
X6	Crystal	133-002-9-006	17.215MHz
X7	Crystal	133-002-9-015	9.545MHz
X8	Crystal	133-002-9-016	9.555MHz
X9	Crystal	133-002-9-017	9.565MHz
X10	Crystal	133-002-9-018	1.585MHz
X11	Crystal	133-002-9-001	10.000MHz
X12	Crystal	133-002-9-012	10.010MHz
X13	Crystal	133-002-9-013	10.020MHz
X14	Crystal	133-002-9-014	10.040MHz

CABINETS & CABINET PARTS (When ordering specify model, chassis & color)

ITEM	PART No.
Knob, Channel Selector	751-084-9-001

ITEM	PART No.
Knob, Volume, Squelch	751-084-9-002

WIRING DATA

General-use Hook-up Wire ..... Use BELDEN No. 8530 (Solid) Available in 12 Colors
8524 (Stranded) Available in 12 Colors
Shielded Antenna Lead ..... Use BELDEN No. 8214 Lowest-loss (RG-8/U Type)
8237 Low-loss (RG-8/U)
8240 (Solid) Miniature (RG-58/U)
8259 (Stranded) Miniature (RG-58A/U)
Coiled Microphone Cable ..... Use BELDEN No. 8497 3-Conductor,1 Shielded,for Press-to-Talk (Neoprene)
8496 3-Conductor,1 Shielded,for Press-to-Talk (Vinyl)
Ignition Noise Suppression ..... Use BELDEN No. 7300-Series Spark-Plug Sets
Bonding Strap ..... Use BELDEN No. 8661 (3/8 In.)