SAMS

PHOTOFACT®

CB RADIO SERIES

CB-44

44

FEBRUARY 1973

CONTENTS

HOWARD W. SAMS & CO., INC. Indianapolis, Indiana

For Supplier Address See PHOTOFACT Index

NOTE

ONLY THOSE PERSONS PROPERLY LICENSED ARE PERMITTED TO MAKE REPAIRS OR ADJUSTMENTS WHICH MAY RESULT IN ILLEGAL OPERATION. (REFER TO FCC RULES AND REGULATIONS PART 95, SUBPARTS C & D.)

The frequency of the transmitter should be checked periodically with a secondary frequency standard to insure proper and legal operation.

Best results will be obtained when adjusting the final RF output circuit if the antenna normally used is connected and the chassis is as nearly in the cabinet as possible.

Connect either 50-ohm dummy load or the normally used antenna system.

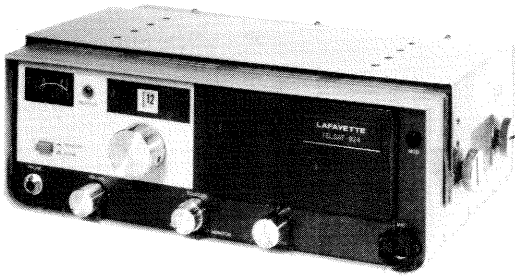

MODEL TELSAT 924 (99-32435)

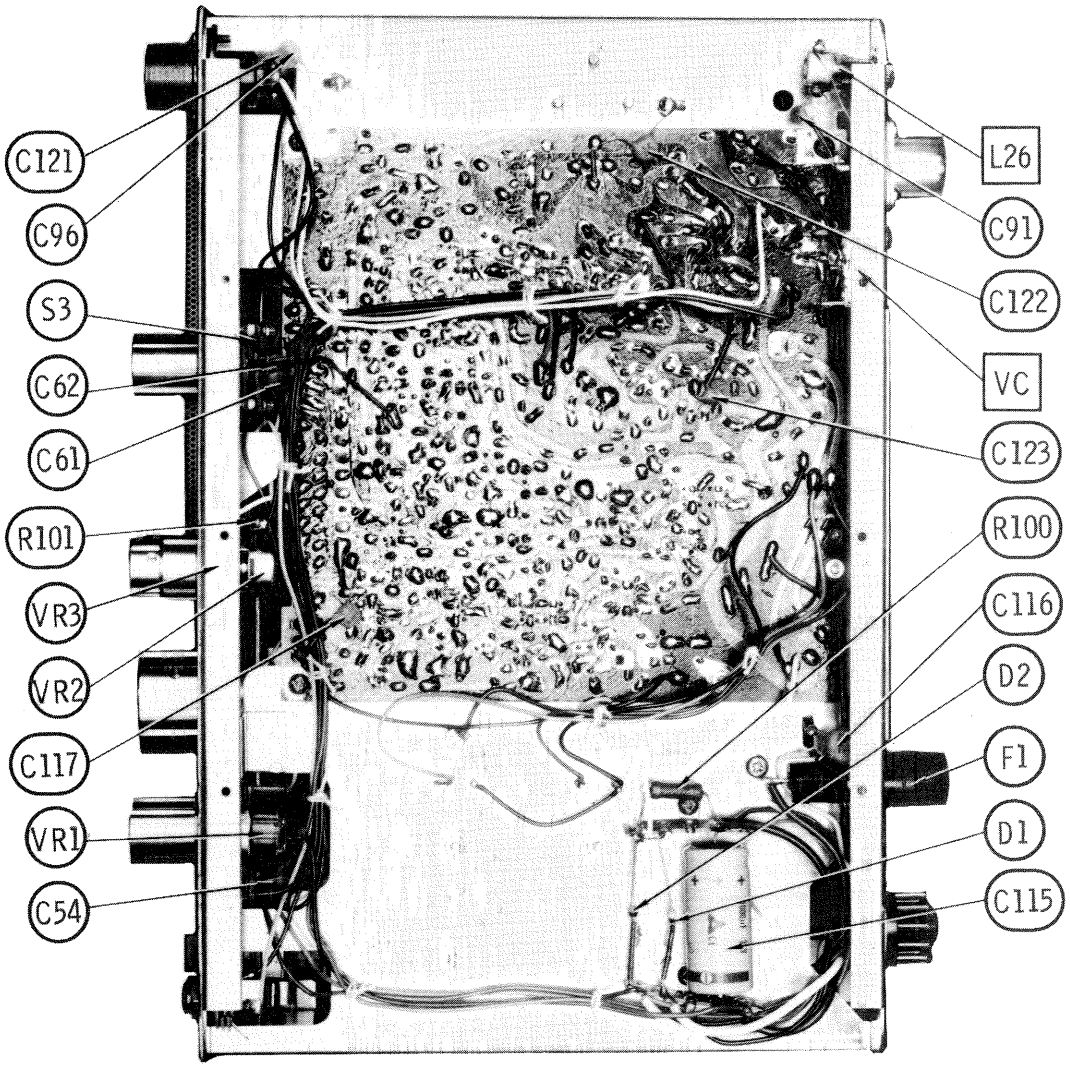

HOWARD W. SAMS & CO., INC. Indianapolis, Indiana 46206

ALIGNMENT INSTRUCTIONS

Suggested Alignment Tools:
L25 .....GC ELECTRONICS #8728
L4 thru L7, L12, L14 thru L16, MF.....GC ELECTRONICS #8728
L2, L3, L10, L11, L13, L17 thru L23, L26.....GC ELECTRONICS #9440

RECEIVER

Connect an AC VTVM across speaker terminals. Set MONITOR-NORM switch to NORM. Set Squelch control fully counterclockwise. Set Volume control to obtain a suitable meter reading.

SIGNAL GENERATOR	CHANNEL	ADJUST	REMARKS
High side thru .01mfd to anode of D9 (2nd Mixer), low side to ground. Set to 455KC (Mod.)	Any	L16, L15, L14, MF	Adjust for MAXIMUM.
High side thru .01mfd to antenna connector, low side to chassis. Set to 27.085MC (Mod.) (Ch. 11)	CH.11	L13,L12, L11,L10, L9, L8	Adjust for MAXIMUM.

RECEIVER (MONITOR)

Set MONITOR-NORM switch to MONITOR. Set Monitor Squelch fully counterclockwise. All other settings remain same as above.

SIGNAL GENERATOR	CHANNEL	ADJUST	REMARKS
High side thru .01mfd to base of TR2 (Monitor Mixer), low side to ground. Set to 435KC (Mod.)	Any	L7,L6,L5 L4,Blue core, L4, Pink core.	Adjust for MAXIMUM.
High side thru .01mfd to antenna connector, low side to chassis. Set to 27.065MC (Mod.) (Ch.9).	Ch.9	L3,L2,L1	Adjust for MAXIMUM.

TRANSMITTER

INDICATOR	ADJUST	REMARKS
RF Wattmeter or Field Strength meter.	L18, L17, L19, L20, L21, L22, L23, L25, VC	Key transmitter and adjust for MAXIMUM.
0-500ma DC Ammeter	L25	Insert meter in collector circuit of TR2 (Final Amp.). Key transmitter and readjust L25 for 5 watts input.
Television (Ch.2)	L26	Adjust for MINIMUM interference.

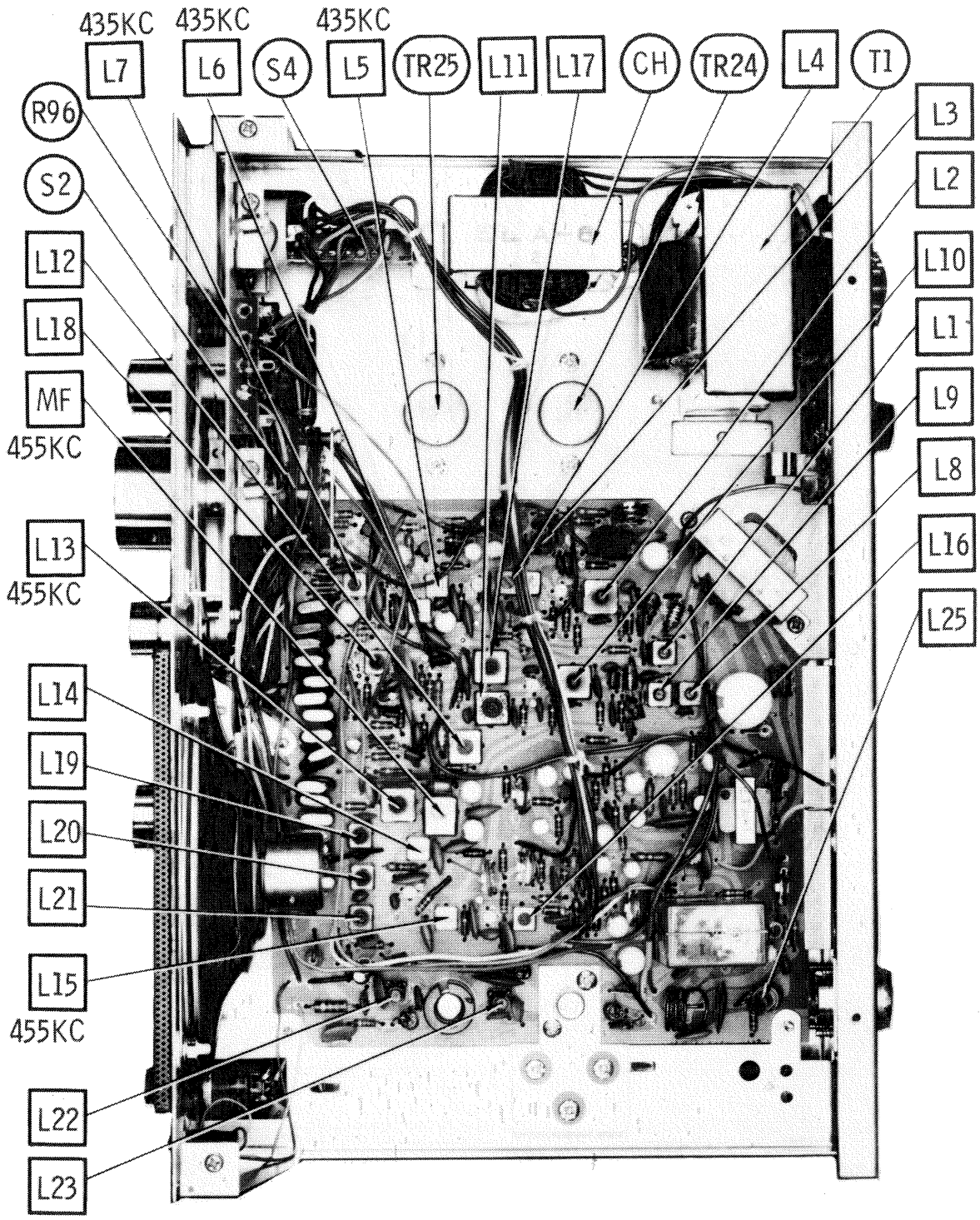
435KC
L7
435KC
L6
S4
435KC
L5
TR25
L11
L17
CH
TR24
L4
T1
R96
S2
L12
L18
MF
455KC
L13
455KC
L14
L19
L20
L21
L15
455KC
L22
L23
L3
L2
L10
L1
L9
L8
L16
L25

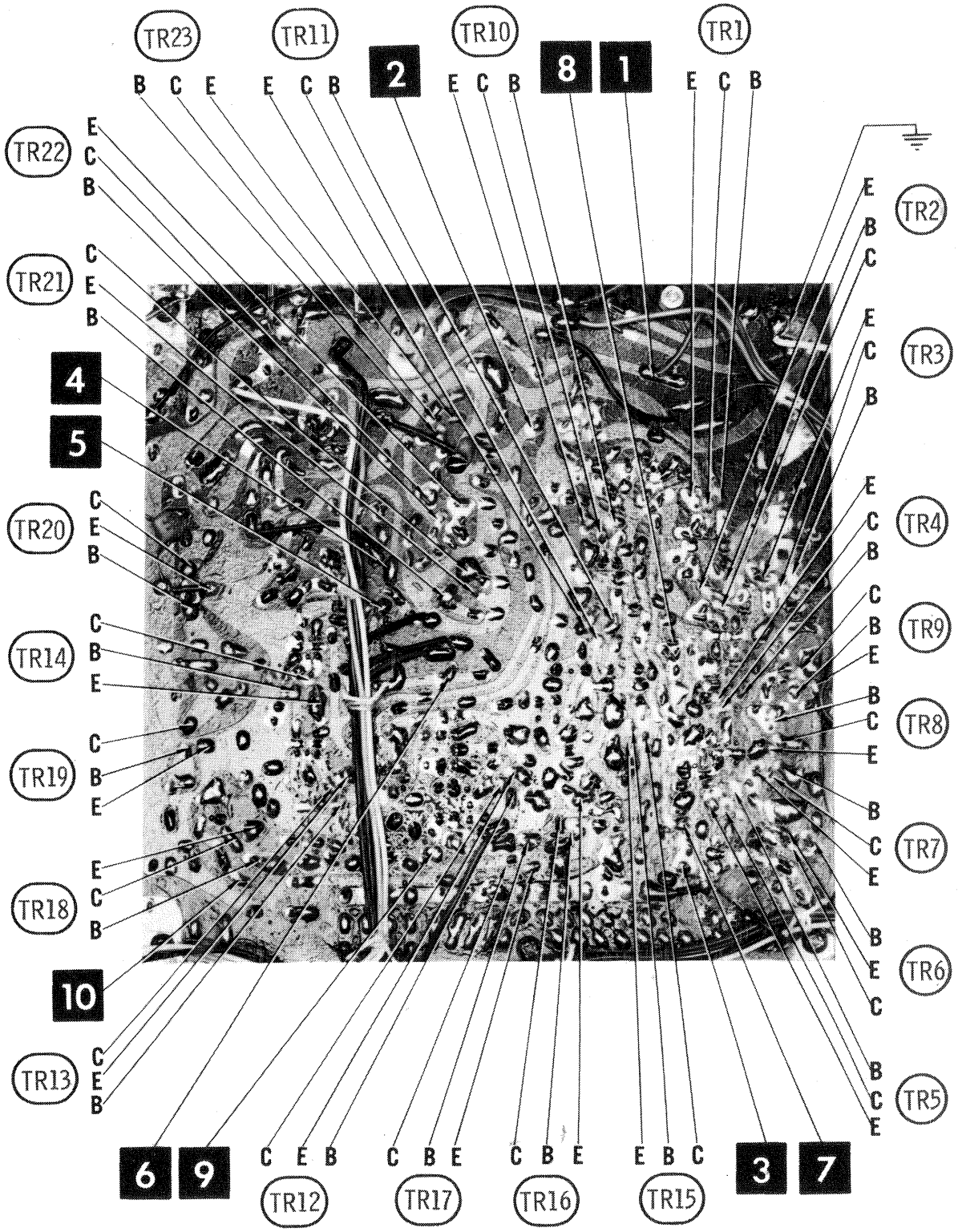

A Howard W. Sams CIRCUITRACE® Photo

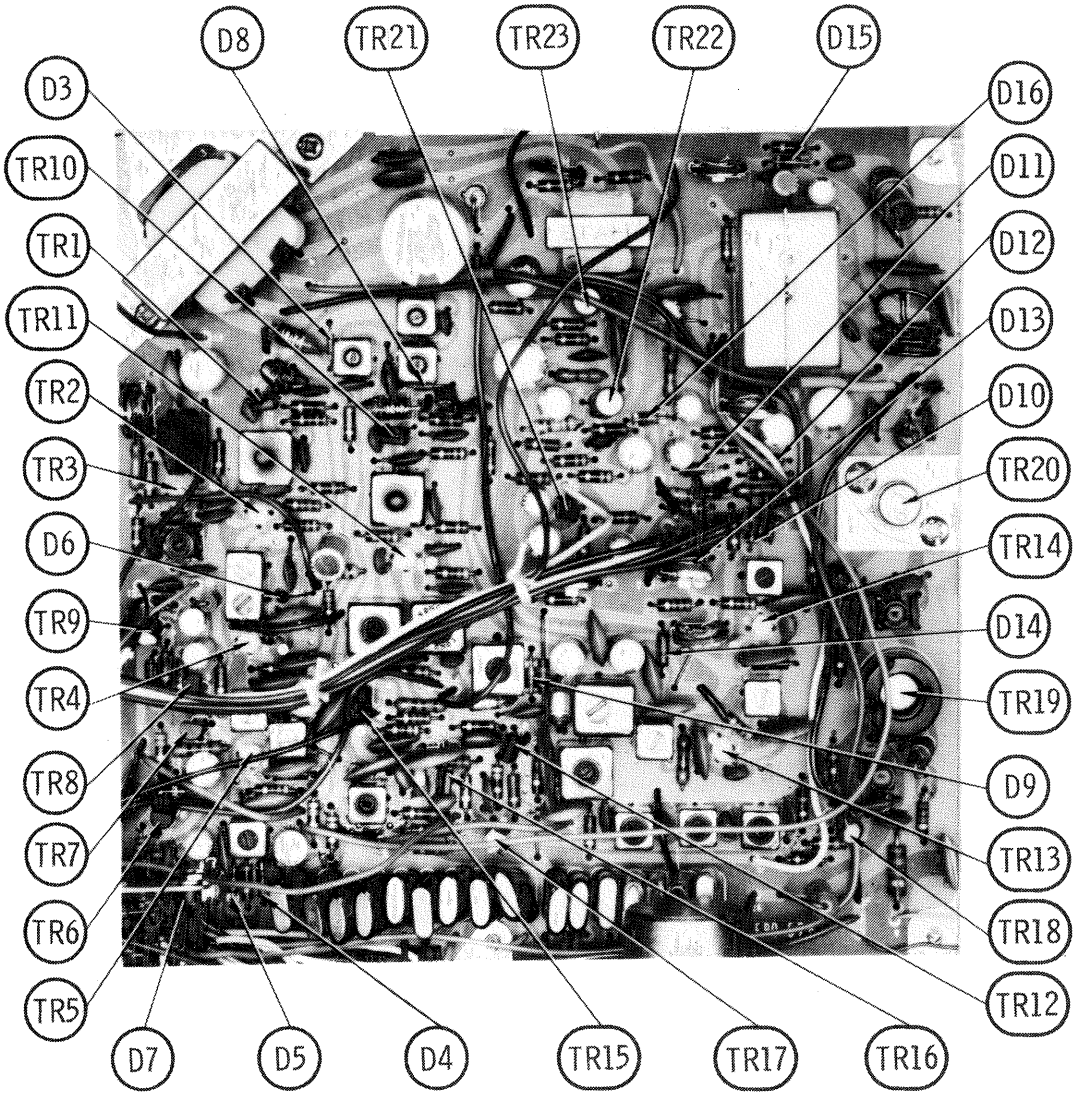
D8
TR21
TR23
TR22
D15
D3
D16
TR10
D11
TR1
D12
TR11
D13
TR2
D10
TR3
TR20
D6
TR14
TR9
D14
TR4
TR19
TR8
D9
TR7
TR13
TR6
TR18
TR5
TR12
D7
D5
D4
TR15
TR17
TR16

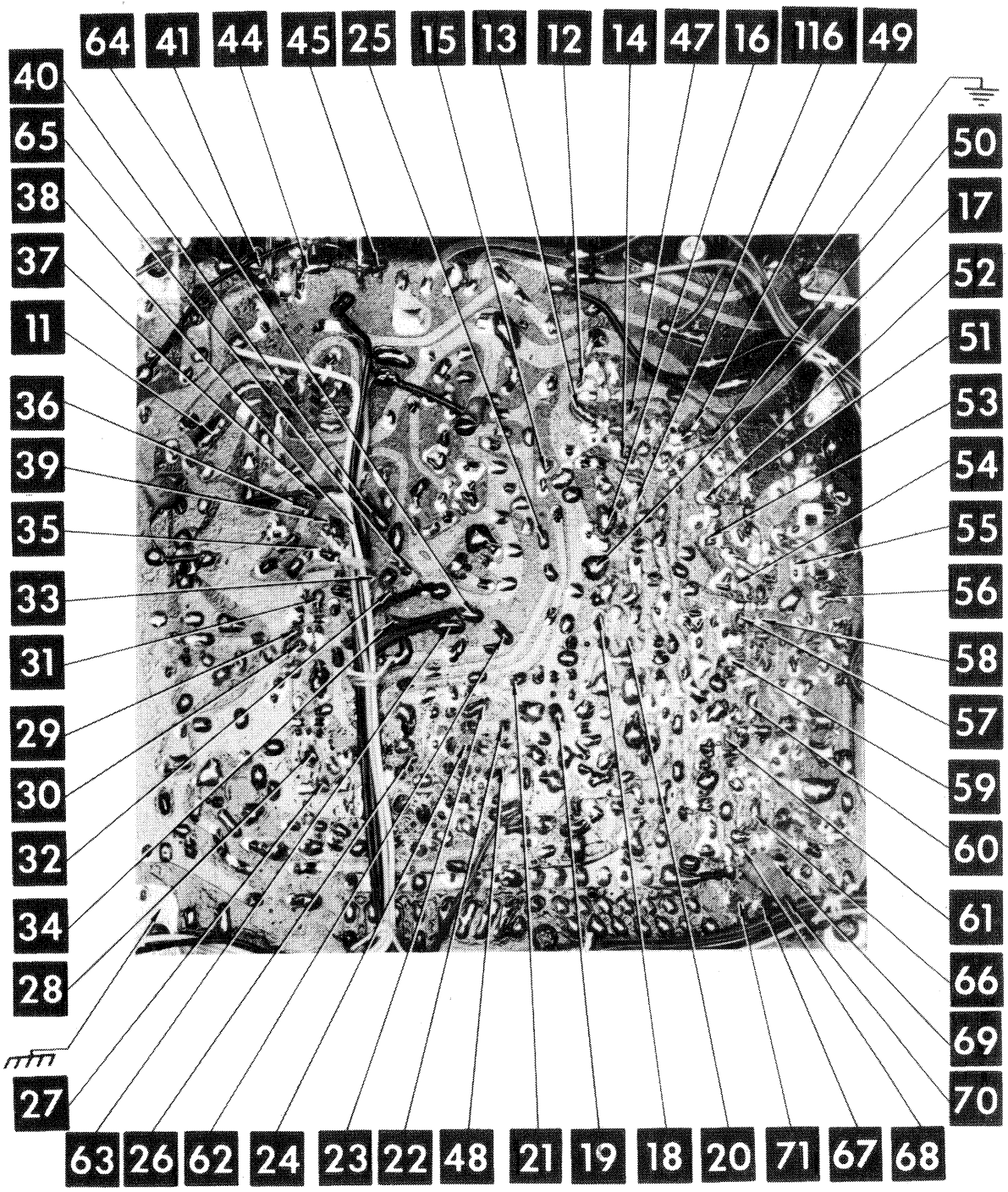

A Howard W. Sams CIRCUITRACE® Photo

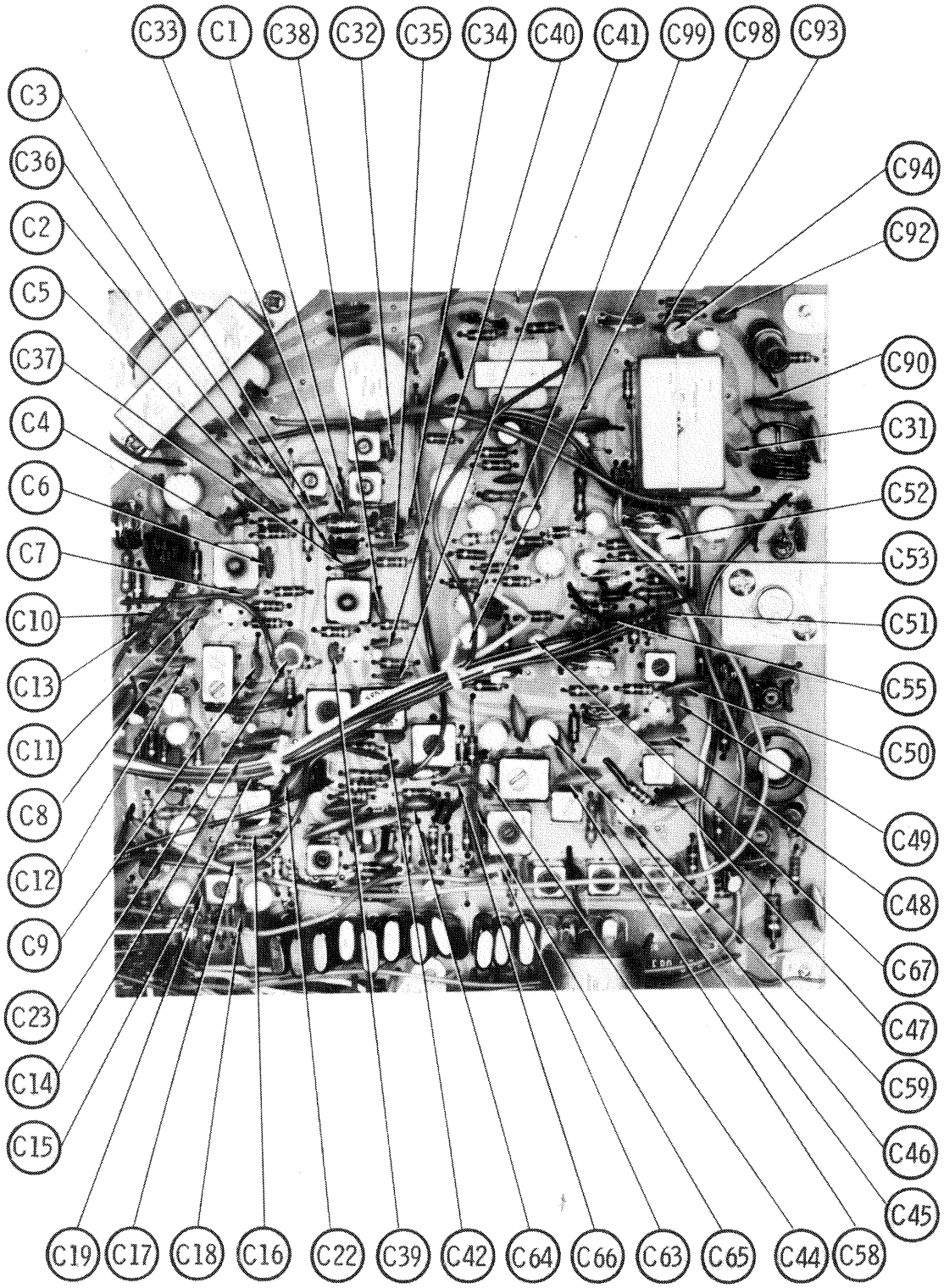
C33
C1
C38
C32
C35
C34
C40
C41
C99
C98
C93
C3
C36
C2
C5
C37
C4
C6
C7
C10
C13
C11
C8
C12
C9
C23
C14
C15
C94
C92
C90
C31
C52
C53
C51
C55
C50
C49
C48
C67
C47
C59
C46
C45
C19
C17
C18
C16
C22
C39
C42
C64
C66
C63
C65
C44
C58

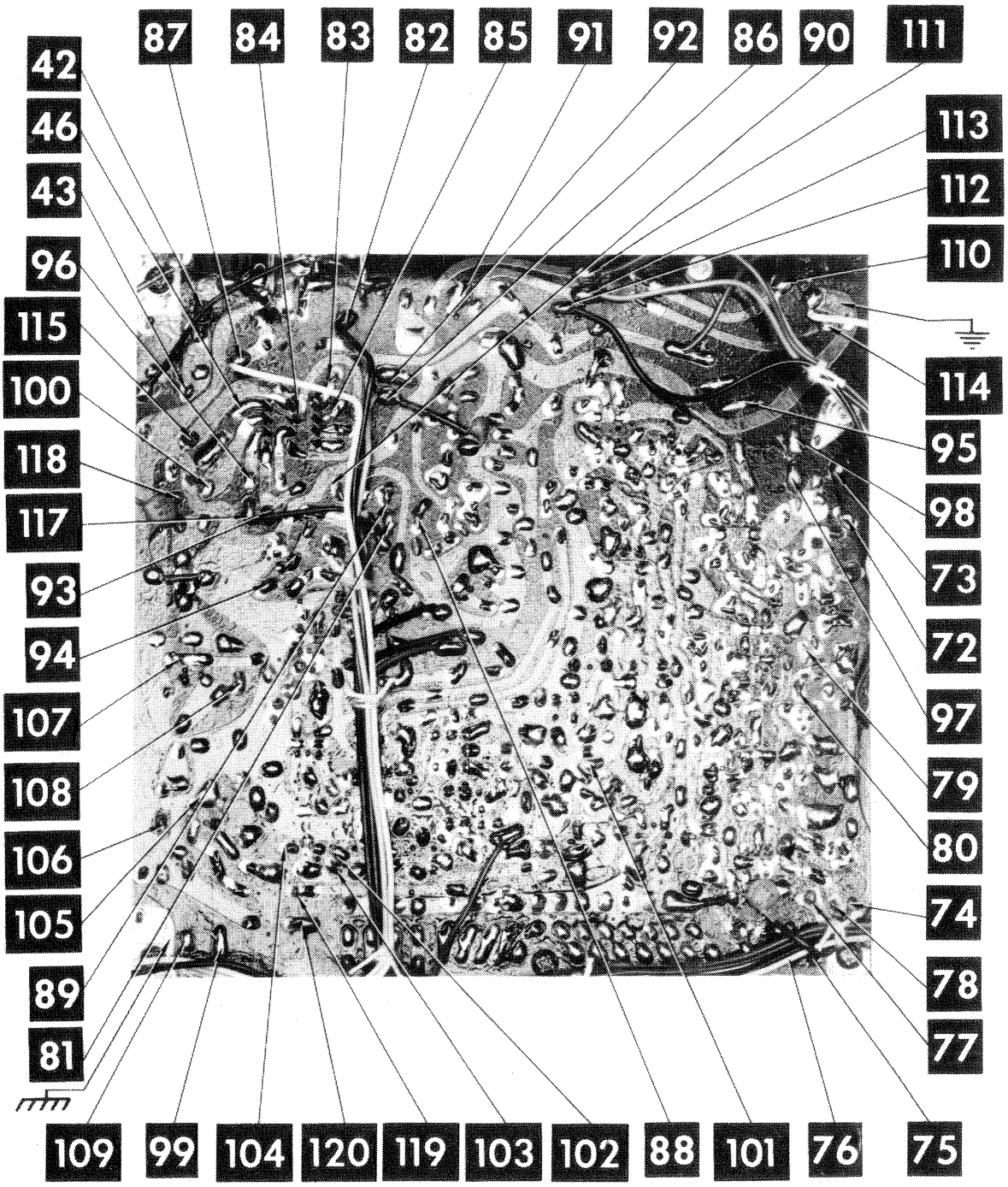

A Howard W. Sams CIRCUITRACE® Photo

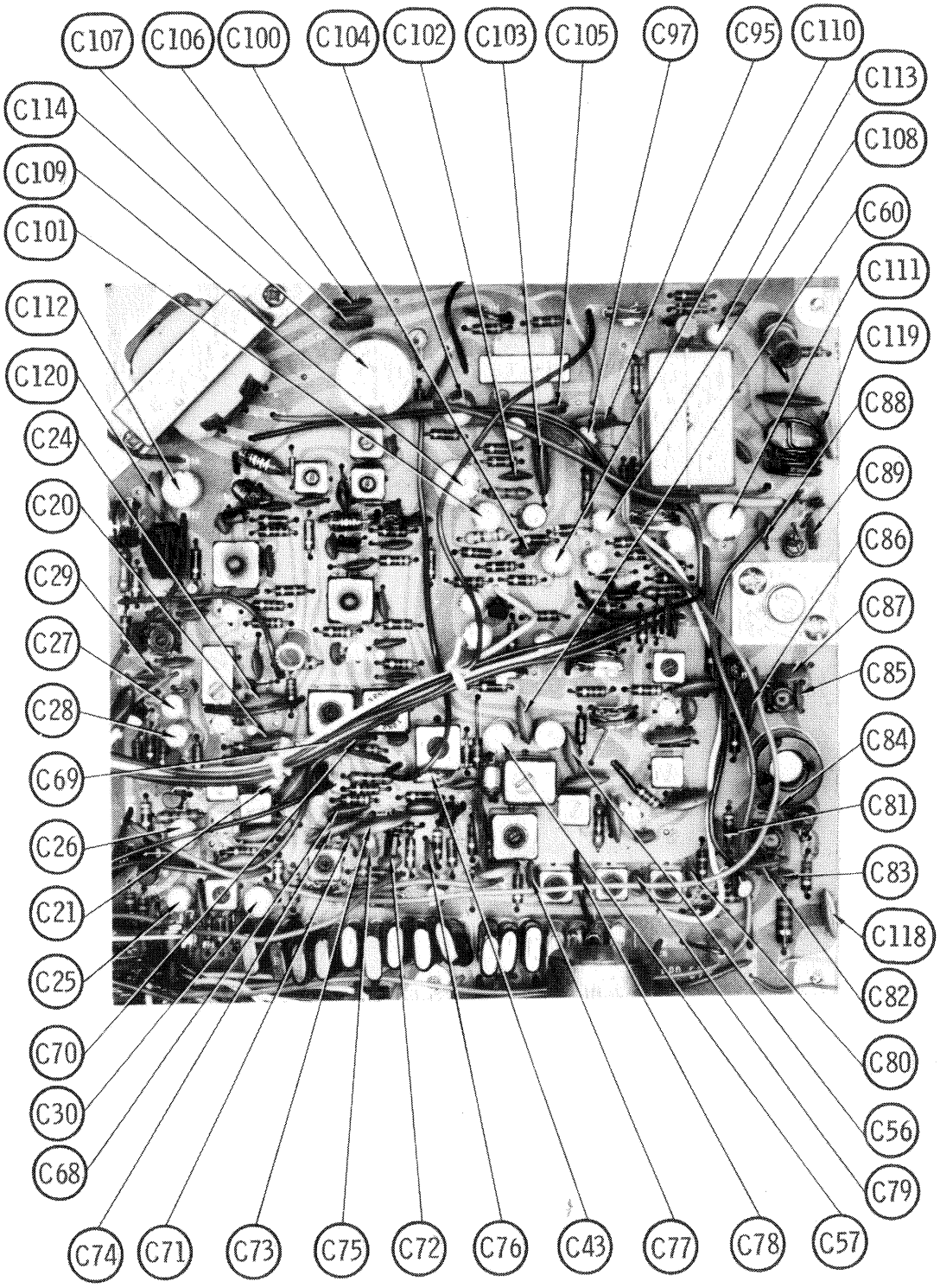
C107
C106
C100
C104
C102
C103
C105
C97
C95
C110
C113
C108
C60
C111
C119
C88
C89
C86
C87
C85
C84
C81
C83
C118
C82
C80
C56
C79
C57
C78
C77
C43
C76
C72
C75
C73
C71
C74
C68
C30
C70
C25
C21
C26
C69
C28
C27
C29
C20
C24
C120
C112
C101
C109
C114

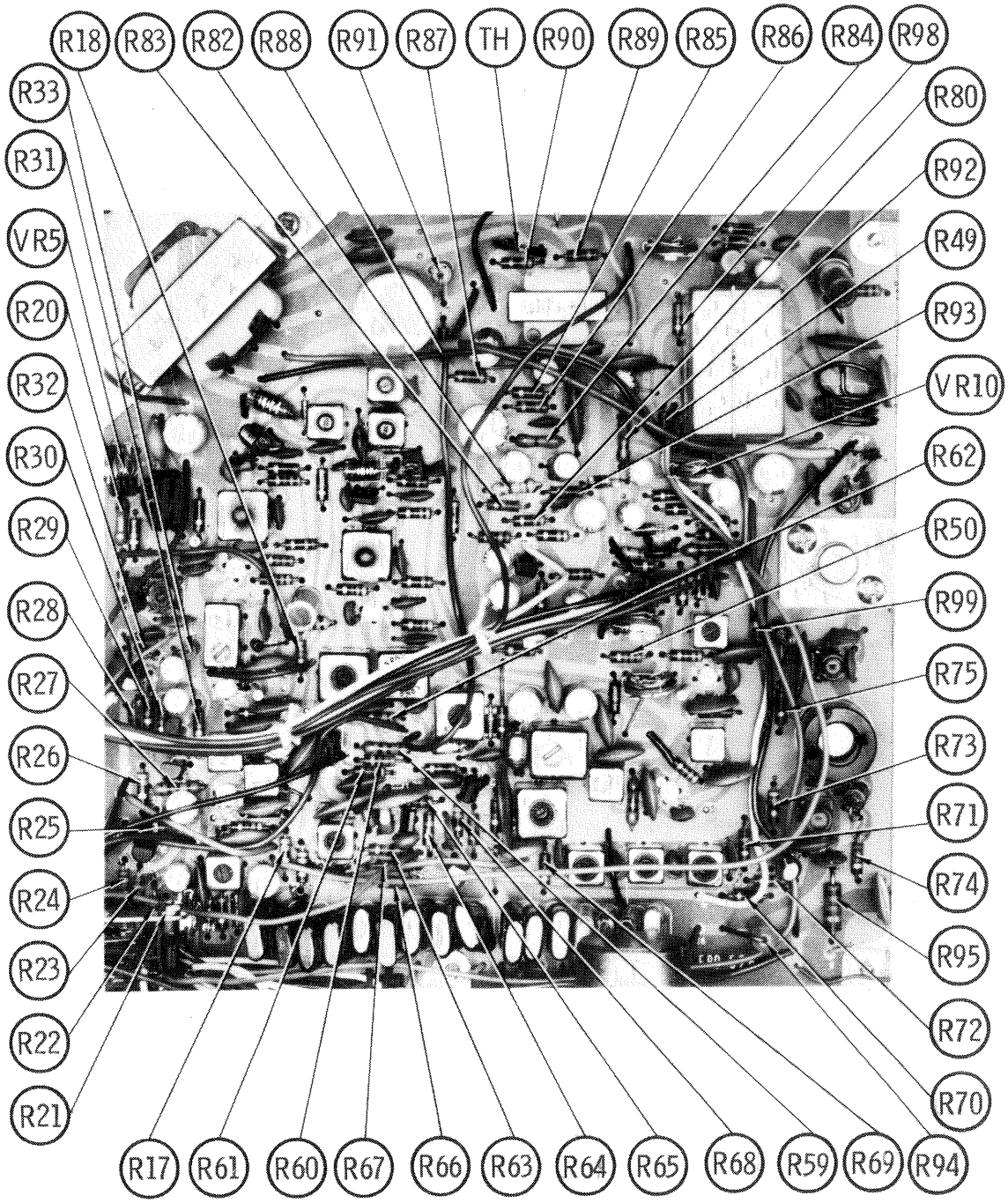
R18
R83
R82
R88
R91
R87
TH
R90
R89
R85
R86
R84
R98
R33
R31
VR5
R20
R32
R30
R29
R28
R27
R26
R25
R24
R23
R22
R21
R80
R92
R49
R93
VR10
R62
R50
R99
R75
R73
R71
R74
R95
R72
R70
R17
R61
R60
R67
R66
R63
R64
R65
R68
R59
R69
R94

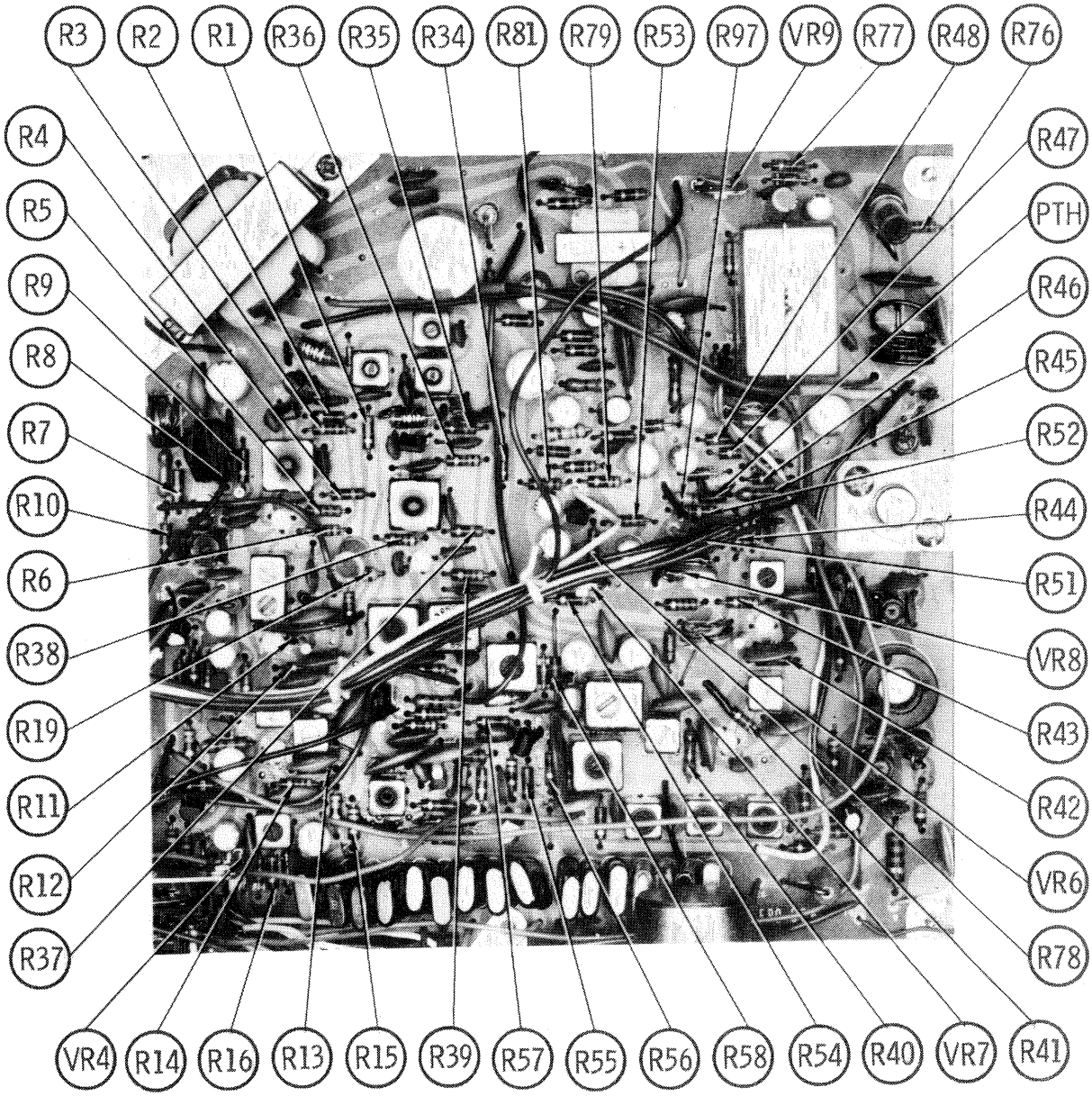
R3
R2
R1
R36
R35
R34
R81
R79
R53
R97
VR9
R77
R48
R76
R4
R5
R9
R8
R7
R10
R6
R38
R19
R11
R12
R37
R47
PTH
R46
R45
R52
R44
R51
VR8
R43
R42
VR6
R78
VR4
R14
R16
R13
R15
R39
R57
R55
R56
R58
R54
R40
VR7
R41

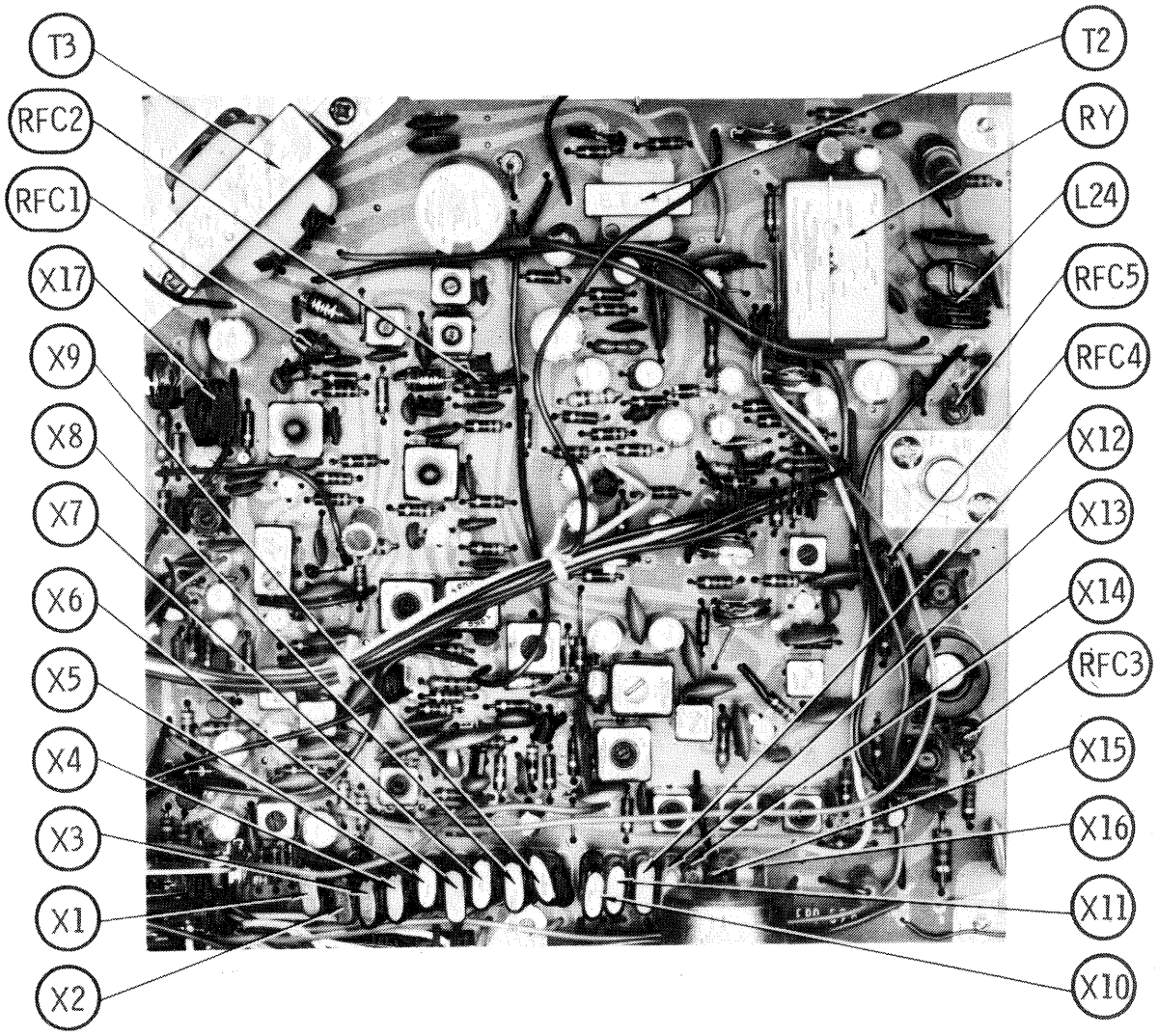
T3
RFC2
RFC1
X17
X9
X8
X7
X6
X5
X4
X3
X1
X2
T2
RY
L24
RFC5
RFC4
X12
X13
X14
RFC3
X15
X16
X11
X10

PARTS LIST AND DESCRIPTION

(When ordering parts, state Model, Part Number, and Description.)

WIRING DATA

General-use Hook-up Wire	Use BELDEN No. 8530 (Solid) Available in 12 Colors 8524 (Stranded) Available in 12 Colors
Shielded Antenna Lead	Use BELDEN No. 8214 Lowest-loss (RG-8/U Type) 8237 Low-loss (RG-8/U) 8240 (Solid) Miniature (RG-58/U) 8259 (Stranded) Miniature (RG-58A/U)
Coiled Microphone Cable	Use BELDEN No. 8497 3-Conductor,1 Shielded,for Press-to-Talk (Neoprene) 8496 3-Conductor,1 Shielded,for Press-to-Talk (Vinyl)
Ignition Noise Suppression	Use BELDEN No. 7300-Series Spark-Plug Sets
Bonding Strap	Use BELDEN No. 8661 (3/8 In.)

SEMICONDUCTORS

ITEM No.	TYPE / MFGR. No./PART No.	REPLACEMENT DATA						
		GENERAL ELECTRIC PART No.	INTERNATIONAL RECTIFIER PART No.	MALLORY PART No.	MOTOROLA PART No.	RCA PART No.	SPRAGUE PART No.	SYLVANIA PART No.
D1	V06C/1949-17	GE-504A (2)	8D4 (2) or 5A4D (2)	PTC201 (2) or PTC202(2)	HEPR0052(2)	SK3030 (2) or SK3031 (2)	RT214 (2) or RT215 (2)	ECG 116 (2)or ECG 117 (2)
D2	V06C/1949-17							
D3	1S953/2066-17	GE-504A	8D4 or 5A4D	PTC201 or PTC202	HEPR0052	SK3100	RT213 or RT214	ECG 116 or ECG 117
D4	1N60/1000-17	1N60	1N60	PTC206	HEP135	SK3088		ECG 109
D5	1N60/1000-17	1N60	1N60	PTC206	HEP135	SK3088		ECG 109
D6	RD9A/1794-17 (10)	GEZD-9.1	Z1208	PTC505	HEPZ2513	SK3060		ECG 139
D7	SD46	1N34AS	1N34A	PTC207	HEP134	SK3087		ECG 109
D8	1S953/2066-17	GE-504A	8D4 or 5A4D	PTC201 or PTC202	HEP156 or HEP157	SK3100	RT213 or RT214	ECG 116 or ECG 117
D9	1N60/1000-17	1N60	1N60	PTC206	HEP135	SK3088		ECG 109
D10	1N60/1000-17	1N60	1N60	PTC206	HEP135	SK3088		ECG 109
D11	1N60/1000-17	1N60	1N60	PTC206	HEP135	SK3088		ECG 109
D12	1N60/1000-17	1N60	1N60	PTC206	HEP135	SK3088		ECG 109
D13	1N60/1000-17	1N60	1N60	PTC206	HEP135	SK3088		ECG 109
D14	RD9A/1794-17 (10)	GEZD-9.1	Z1208	PTC505	HEP2513	SK3060		ECG 139
D15	1N60/1000-17	1N60	1N60	PTC206	HEP135	SK3088		ECG 109
D16	1N60/1000-17	1N60	1N60	PTC206	HEP135	SK3088		ECG 109
TR1	2SC460/1373-17	GE-20	TR-21	PTC121	HEP53	SK3018	RT108	ECG 107
TR2	2SC184/1634-17	GE-20	TR-21	PTC132	HEP56	SK3018	RT113	ECG 108
TR3	2SC183/1210-17	GE-20	TR-21	PTC132	HEP56	SK3018	RT113	ECG 108
TR4	2SC183/1210-17	GE-20	TR-21	PTC132	HEP56	SK3018	RT113	ECG 108
TR5	2SC183/1210-17	GE-20	TR-21	PTC132	HEP56	SK3018	RT113	ECG 108
TR6	2SC945/2063-17	GE-20	TR-21	PTC121	HEP728	SK3018	RT102	ECG 123A
TR7	2SC945/2063-17	GE-20	TR-21	PTC121	HEP728	SK3018	RT102	ECG 123A
TR8	2SC945/2063-17	GE-20	TR-21	PTC121	HEP728	SK3018	RT102	ECG 123A
TR9	2SA564/1935-17	GE-21	TR-19	PTC127	HEP57	SK3114	RT115	ECG 159
TR10	2SC460A/1373-17	GE-20	TR-21	PTC121	HEP53	SK3018	RT108	ECG 107
TR11	2SC184/1634-17	GE-20	TR-21	PTC132	HEP56	SK3018	RT113	ECG 108
TR12	2SC460/1373-17	GE-20	TR-21	PTC121	HEP53	SK3018	RT108	ECG 107
TR13	2SC183/1210-17	GE-20	TR-21	PTC132	HEP56	SK3018	RT113	ECG 108
TR14	2SC183/1210-17	GE-20	TR-21	PTC132	HEP56	SK3018	RT113	ECG 108
TR15	2SC460/1373-17	GE-20	TR-21	PTC121	HEP53	SK3018	RT108	ECG 107
TR16	2SC460/1373-17	GE-20	TR-21	PTC121	HEP53	SK3018	RT108	ECG 107
TR17	GE-20	GE-20	TR-25	PTC123	HEP736	SK3018	RT102	ECG 123A
TR18	2SC815/1879-17	GE-20	TR-25	PTC123	HEP736	SK3018	RT102	ECG 123A
TR19	SK3047 (2SC781)/ 1916-17	GE-18	IRTR-64	PTC125	HEPS3001	SK3047	RT114	ECG 128
TR20	2SCF-8/1068-17					SK3049		
TR21	2SC945/2063-17	GE-20	TR-21	PTC121	HEP728	SK3122	RT102	ECG 123A
TR22	2SD77/1906-17	GE-8	TR-08	PTC108	HEP641	SK3010	RT122	ECG 103A
TR23	2SB77/1060-17	GE-2	TR-05	PTC102	HEP632	SK3004	RT121	ECG 102A
TR24	2SB337/1559-17	GE-17 (7)	TR-01 (7)	PTC105 (7)	HEP232 (7)	SK3009 (7)	RT107 (7)	ECG 121MP (6)
TR25	2SB337/1559-17							

(10) Zener. (6) Matched Pair. (2) Two Required.
(7) Two required - select matched pair.

(CONTINUED ON PAGE 58)

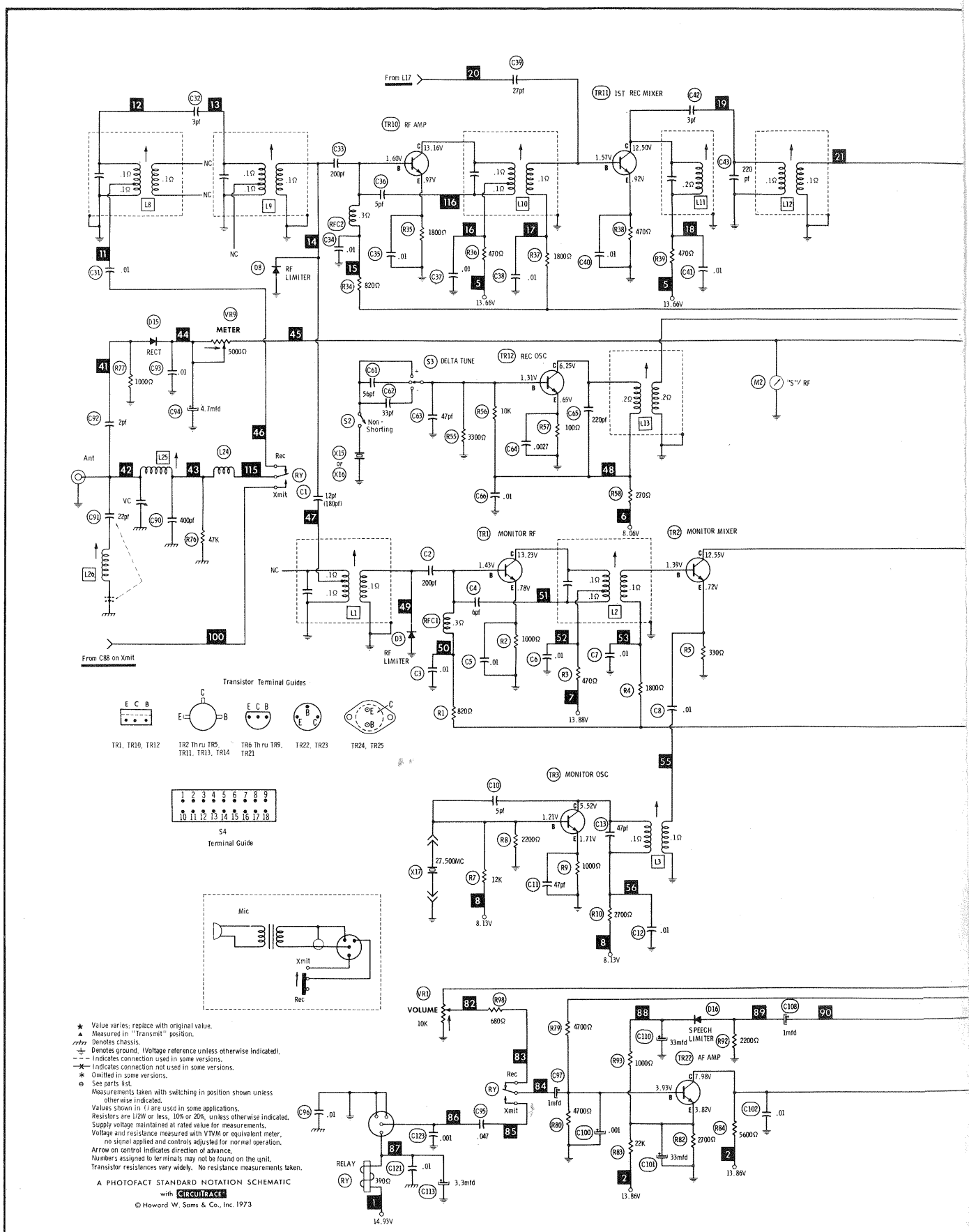
From L17
TR10 RF AMP
TR11 1ST REC MIXER
RF LIMITER
METER
RECT
S3 DELTA TUNE
TR12 REC OSC
Non-Shorting
M2 "S"/ RF
Ant
Rec
Xmit
TR1 MONITOR RF
TR2 MONITOR MIXER
From C88 on Xmit
Transistor Terminal Guides
TR1, TR10, TR12
TR2 Thru TR5, TR11, TR13, TR14
TR6 Thru TR9, TR21
TR22, TR23
TR24, TR25
TR3 MONITOR OSC
27.500MC
S4
Terminal Guide
Mic
VOLUME
10K
SPEECH LIMITER
TR22 AF AMP
RELAY
★ Value varies; replace with original value.
▲ Measured in "Transmit" position.
Denotes chassis.
Denotes ground. (Voltage reference unless otherwise indicated).
Indicates connection used in some versions.
Indicates connection not used in some versions.
* Omitted in some versions.
⊖ See parts list.
Measurements taken with switching in position shown unless otherwise indicated.
Values shown in ( ) are used in some applications.
Resistors are 1/2W or less, 10% or 20%, unless otherwise indicated.
Supply voltage maintained at rated value for measurements.
Voltage and resistance measured with VTVM or equivalent meter, no signal applied and controls adjusted for normal operation.
Arrow on control indicates direction of advance.
Numbers assigned to terminals may not be found on the unit.
Transistor resistances vary widely. No resistance measurements taken.
A PHOTOFACT STANDARD NOTATION SCHEMATIC
with CIRCUITRACE
© Howard W. Sams & Co., Inc. 1973

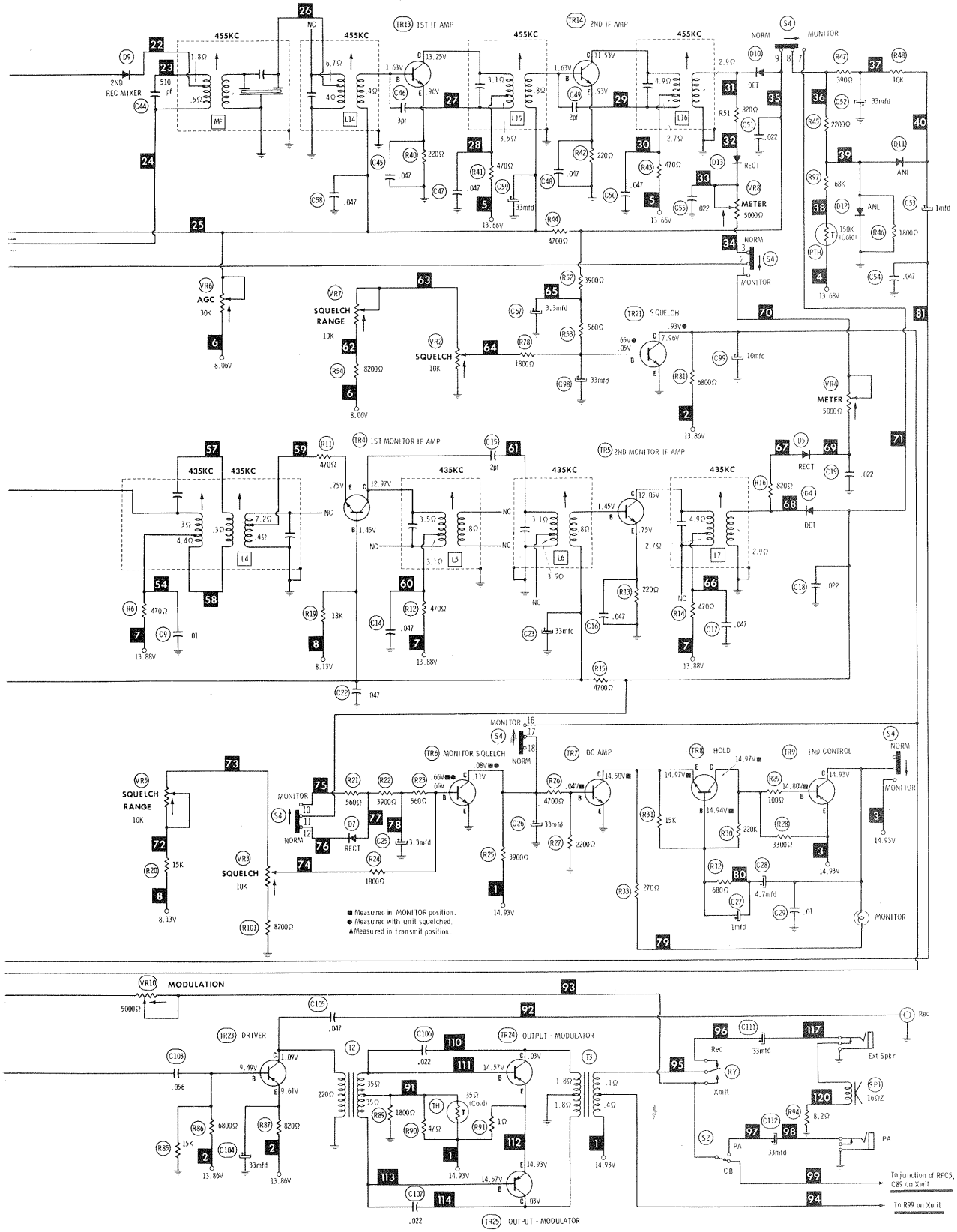

LAFAYETTE MODEL TELSAT 924

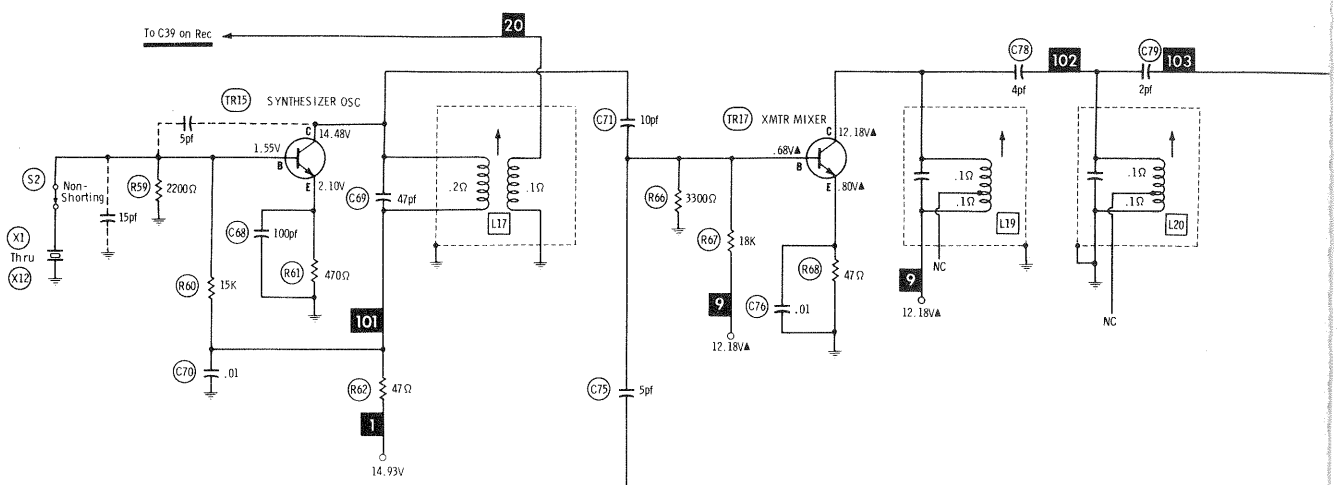

Transistor Terminal Guide

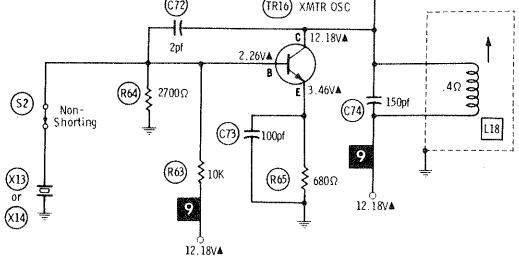

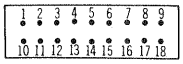

S4
Terminal Guide

Chan	Crystal Complement	Chan	Crystal Complement	Chan	Crystal Complement	Chan	Crystal Complement
1	X14, X16, X1	7	X13, X15, X3	13	X13, X15, X5	19	X14, X16, X11
2	X14, X16, X2	8	X13, X15, X4	14	X13, X15, X6	20	X14, X16, X12
3	X14, X16, X3	9	X14, X16, X5	15	X13, X15, X7	21	X13, X15, X9
4	X14, X16, X4	10	X14, X16, X6	16	X13, X15, X8	22	X13, X15, X10
5	X13, X15, X1	11	X14, X16, X7	17	X14, X16, X9		PA
6	X13, X15, X2	12	X14, X16, X8	18	X14, X16, X10	23	X3, X15, X12

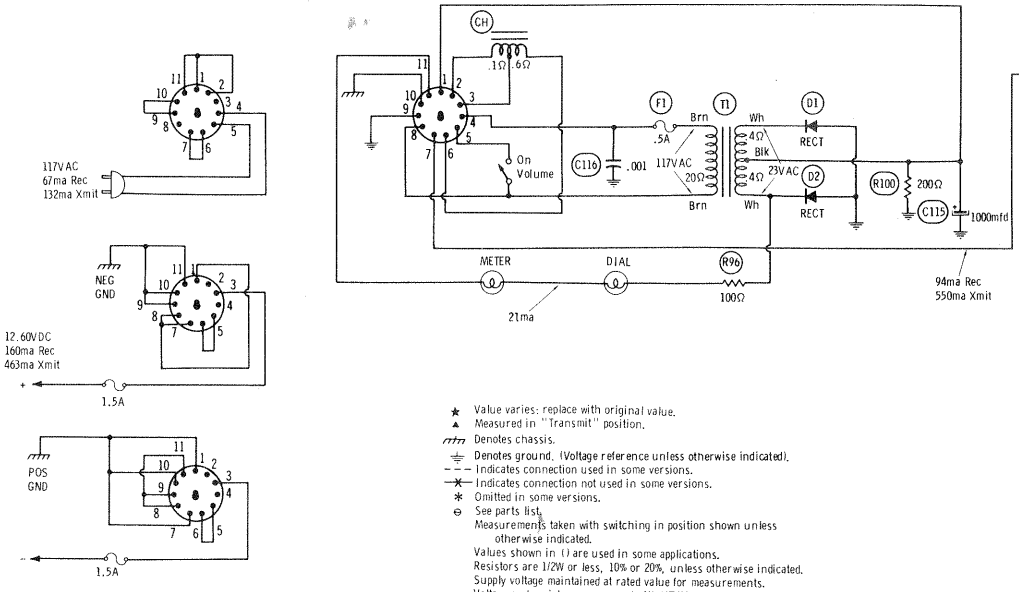

★ Value varies: replace with original value.
▲ Measured in "Transmit" position.
Denotes chassis.
Denotes ground. (Voltage reference unless otherwise indicated).
Indicates connection used in some versions.
Indicates connection not used in some versions.
* Omitted in some versions.
⊖ See parts list.
Measurements taken with switching in position shown unless otherwise indicated.
Values shown in ( ) are used in some applications.
Resistors are 1/2W or less, 10% or 20%, unless otherwise indicated.
Supply voltage maintained at rated value for measurements.
Voltage and resistance measured with VTVM or equivalent meter, no signal applied and controls adjusted for normal operation.
Arrow on control indicates direction of advance.
Numbers assigned to terminals may not be found on the unit.
Transistor resistances vary widely. No resistance measurements taken.

A PHOTOFACT STANDARD NOTATION SCHEMATIC
with CIRCUITRACE®

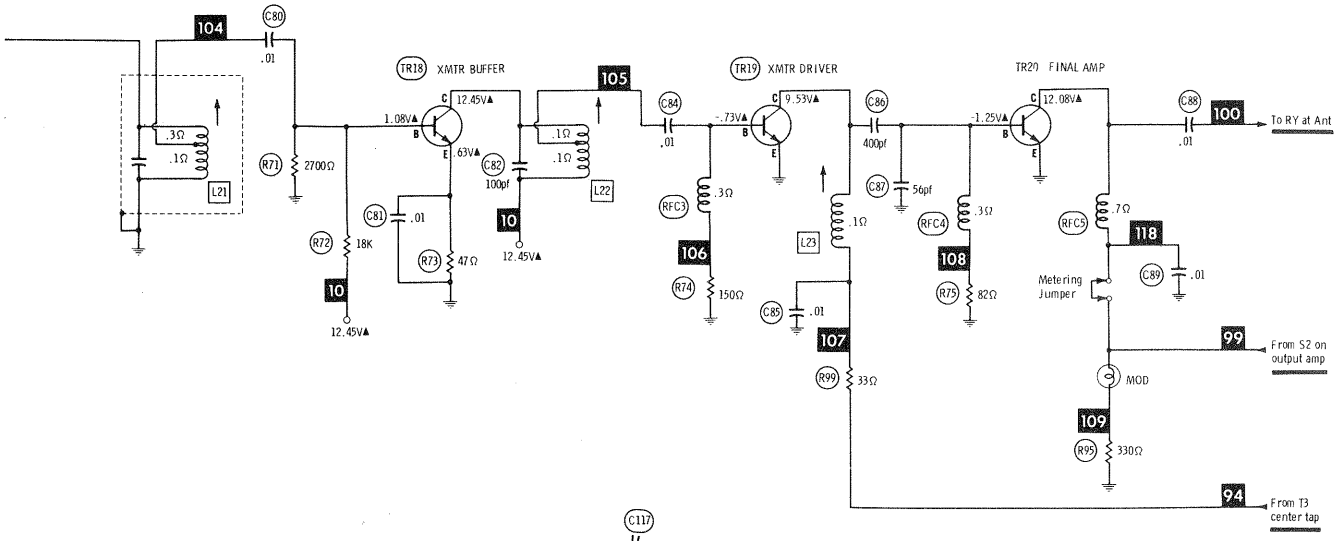

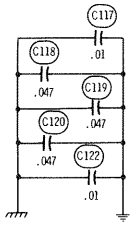

■ Measured in MONITOR position.
● Measured with unit squelched.
▲ Measured in transmit position.

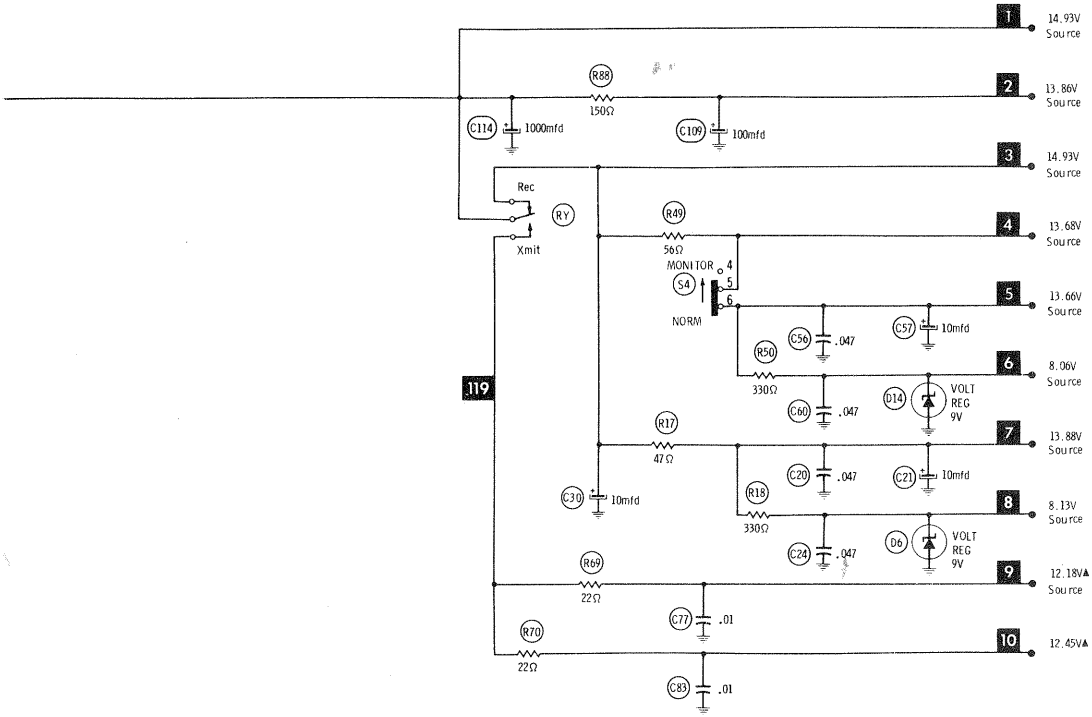

LAFAYETTE MODEL TELSAT 924

PARTS LIST AND DESCRIPTION (CONTINUED)

(When ordering parts, state Model, Part Number, and Description.)

ELECTROLYTIC CAPACITORS

ITEM No.	RATING		REPLACEMENT DATA						
			MFGR. PART No.	ARCO PART No.	CENTRALAB PART No.	CORNELL-DUBILIER PART No.	GENERAL ELECTRIC PART No.	MALLORY PART No.	SPRAGUE PART No.
C21	10	16V		RME-B-E-010	EP15-10	WBR10-25	MT1-5	MTV10CB50	EV-1222
C23	33	10V		ME-3-D-035	EP15-25	WBR35-50	MT1-13.5	MTV30CB25	EV-1125
C25	3.3	25V	3191-12	RME-A-H-003	EP30-5	WBR5-50	MT1-3	MTV3CB50	EV-1618
C26	33	10V		ME-3-D-035	EP15-25	WBR35-50	MT1-13.5	MTV30CB25	EV-1125
C27	1	50V		RME-A-J-001	EP50-2	WBR1-50	MT1-1	MTV1CB50	EV-1615
	1	25V	3084-12	RME-A-G-001	EP30-2	WBR1-50	MT1-1	MTV1CB50	EV-1315
C28	4.7	25V		RME-A-G-005	EP30-5	WBR5-50	MT1-3	MTV5CB50	EV-1319
	4.7	16V	2990-12	RME-A-E-005	EP15-5	WBR5-50	MT1-3	MTV5CB50	EV-1319
C30	10	16V	3102-12	RME-B-E-010	EP15-10	WBR10-25	MT1-5	MTV10CB50	EV-1222
C52	33	10V		ME-3-D-035	EP15-25	WBR35-50	MT1-13.5	MTV30CB25	EV-1125
C53	1	50V		RME-A-J-001	EP50-2	WBR1-50	MT1-1	MTV1CB50	EV-1615
	1	25V	3084-12	RME-A-G-001	EP30-2	WBR1-50	MT1-1	MTV1CB50	EV-1315
C57	10	16V		RME-B-E-010	EP15-10	WBR10-25	MT1-5	MTV10CB50	EV-1222
C59	33	10V		ME-3-D-035	EP15-25	WBR35-50	MT1-13.5	MTV30CB25	EV-1125
C67	3.3	25V	3191-12	RME-A-H-003	EP30-5	WBR5-50	MT1-3	MTV3CB50	EV-1618
C94	4.7	25V		RME-A-G-005	EP30-5	WBR5-50	MT1-3	MTV5CB50	EV-1319
	4.7	16V	2990-12	RME-A-E-005	EP15-5	WBR5-50	MT1-3	MTV5CB50	EV-1319
C97	1	50V		RME-A-J-001	EP50-2	WBR1-50	MT1-1	MTV1CB50	EV-1615
	1	25V	3084-12	RME-A-G-001	EP30-2	WBR1-50	MT1-1	MTV1CB50	EV-1315
C98	33	10V		ME-3-D-035	EP15-25	WBR35-50	MT1-13.5	MTV30CB25	EV-1125
C99	10	10V	3102-12	RME-A-D-010	EP15-10	WBR10-25	MT1-5	MTV10CB50	EV-1222
C101	33	10V		ME-3-D-035	EP15-25	WBR35-50	MT1-13.5	MTV30CB25	EV-1125
C104	33	10V		ME-3-D-035	EP15-25	WBR35-50	MT1-13.5	MTV30CB25	EV-1125
C108	1	50V		RME-A-J-001	EP50-2	WBR1-50	MT1-1	MTV1CB50	EV-1615
	1	25V	3084-12	RME-A-G-001	EP30-2	WBR1-50	MT1-1	MTV1CB50	EV-1315
C109	100	16V		RME-E-E-100	EP15-100	WBR100-16	MT1-19	MTV100CD15	EV-1230
C110	33	10V		ME-3-D-035	EP15-25	WBR35-50	MT1-13.5	MTV30CB25	EV-1125
C111	33	16V		ME-3-E-035	EP15-25	WBR35-50	MT1-13.5	MTV30CB25	EV-1325
C112	33	16V		ME-3-E-035	EP15-25	WBR35-50	MT1-13.5	MTV30CB25	EV-1325
C113	3.3	25	3191-12	RME-A-H-003	EP30-5	WBR5-50	MT1-3	MTV3CB50	EV-1618
C114	1000	16V	3055-12	RME-N-E-1000	EA15-1000	WBR1000-16	QT1-32	TC1501B	EV-1260
C115	1000	25V	1980-12	RME-P-G-1000	EA30-1000	WBR1000-25		MTA1000G25	EV-1360

CAPACITORS

ITEM No.	RATING		MFGR. PART No.	REPLACEMENT DATA				
				ARCO/ELMENCO PART No.	CENTRALAB PART No.	CORNELL-DUBILIER PART No.	MALLORY PART No.	SPRAGUE PART No.
C1	12	10%		CCD-120	DD-120	NP012	GP412	10TS-012
C2	200	10%		DM-19-201J	CPR-200J	CD15FD201J03	SX320	424ME2000J501
C3	.01			CCD-103	CK-103	MGP01	TA110	TG-S10
C4	6				DD-060	NP06		
C5	.01			CCD-103	CK-103	MGP01	TA110	TG-S10
C6	.01			CCD-103	CK-103	MGP01	TA110	TG-S10
C7	.001			CCD-103	CK-103	MGP01	TA110	TG-S10
C8	.01			CCD-103	CK-103	MGP01	TA110	TG-S10
C9	.01			CCD-103	CK-103	MGP01	TA110	TG-S10
C10	5					NP05		10TCC-V50
C11	47	10%		CCT0-470	DTZ-47	NP047	CN0447	10TCC-Q47
C12	.01			CCD-103	CK-103	MGP01	TA110	TG-S10
C13	47	10%		CCT0-470	DTZ-47	NP047	CN0447	10TCC-Q47
C14	.047			CCD-503	CK-503	MGP05	TA150	TG-S50
C15	2				DTZ-2R2	NP02P2	CN0522	10TCC-V22
C16	.047			CCD-503	CK-503	MGP05	TA150	TG-S50
C17	.047			CCD-503	CK-503	MGP05	TA150	TG-S50
C18	.022			CCD-203	CK-203	MGP02	TA120	TG-S20
C19	.022			CCD-203	CK-203	MGP02	TA120	TG-S20
C20	.047			CCD-503	CK-503	MGP05	TA150	TG-S50
C22	.047			CCD-503	CK-503	MGP05	TA150	TG-S50
C24	.047			CCD-503	CK-503	MGP05	TA150	TG-S50
C29	.01			CCD-103	CK-103	MGP01	TA110	TG-S10
C31	.01			CCD-103	CK-103	MGP01	TA110	TG-S10
C32	3							10TCC-V30
C33	200			DM-19-201J	CPR-200J	CD15FD201J03	SX320	424ME2000J501

CAPACITORS (cont)

ITEM No.	RATING			MFGR. PART No.	REPLACEMENT DATA ARCO/ELMENCO PART No.	CENTRALAB PART No.	CORNELL-DUBILIER PART No.	MALLORY PART No.	SPRAGUE PART No.
C34	.01				CCD-103	CK-103	MGP01	TA110	TG-S10
C35	.01				CCD-103	CK-103	MGP01	TA110	TG-S10
C36	5						NP05		10TCC-V50
C37	.01				CCD-103	CK-103	MGP01	TA110	TG-S10
C38	.01				CCD-103	CK-103	MGP01	TA110	TG-S10
C39	27				CCT0-270		NP027	CN0427	10TCC-Q27
C40	.01				CCD-103	CK-103	MGP01	TA110	TG-S10
C41	.01				CCD-103	CK-103	MGP01	TA110	TG-S10
C42	3								10TCC-V30
C43	220				DM-19-221J	CPR-220J	CD15FD221J03	SX322	424ME2200J501
C44	510				DM-19-511J	CPR-510J	CD15FD11J03	SX351	424ME5100J501
C45	.047				CCD-503	CK-503	MGP05	TA150	TG-S50
C46	3								10TCC-V30
C47	.047				CCD-503	CK-503	MGP05	TA150	TG-S50
C48	.047				CCD-503	CK-503	MGP05	TA150	TG-S50
C49						DTZ-2R2	NP02P2	CN0522	10TCC-V22
C50	.047				CCD-503	CK-503	MGP05	TA150	TG-S50
C51	.022				CCD-203	CK-203	MGP02	TA120	TG-S20
C54	.047				CCD-503	CK-503	MGP05	TA150	TG-S50
C55	.022				CCD-203	CK-203	MGP02	TA120	TG-S20
C56	.047				CCD-503	CK-503	MGP05	TA150	TG-S50
C58	.047				CCD-503	CK-503	MGP05	TA150	TG-S50
C60	.047	25V			CCD-503	CK-503	MGP05	TA150	TG-S50
C61	56				CCD-560	DD-560		GP456	10TS-Q56
C62	33				CCT0-330	DTZ-33	NP033	CN0433	10TCC-Q33
C63	47	10%			CCT0-470	DTZ-47	NP047	CN0447	10TCC-Q47
C64	.0027	10%	50V		CCD-272	DD-272			10TS-D27
C65	220	10%			CCD-221	DD-221	GP220	GP322	10TS-T22
C66	.01				CCD-103	CK-103	MGP01	TA110	TG-S10
C68	100	10%			CCT0-101	DTZ-100	NP0100	CN0310	10TCC-T10
C69	47	10%			CCT0-470	DTZ-47	NP047	CN0447	10TCC-Q47
C70	.01				CCD-103	CK-103	MGP01	TA110	TG-S10
C71	10				CCT0-100	DTZ-10	NP010	CN0410	10TCC-Q10
C72	2					DTZ-2R2	NP02P2	CN0522	10TCC-V22
C73	100	10%			CCT0-101	DTZ-100	NP0100	CN0310	10TCC-T10
C74	150	10%			CCD-151	DD-151	GP150	GP315	10TS-T15
C75	5						NP05		10TCC-V50
C76	.01				CCD-103	CK-103	MGP01	TA110	TG-S10
C77	.01				CCD-103	CK-103	MGP01	TA110	TG-S10
C78	4						NP03P9		10TCC-V39
C79	2					DTZ-2R2	NP02P2	CN0522	10TCC-V22
C80	.01				CCD-103	CK-103	MGP01	TA110	TG-S10
C81	.01				CCD-103	CK-103	MGP01	TA110	TG-S10
C82	100	10%			CCT0-101	DTZ-100	NP0100	CN0310	10TCC-T10
C83	.01				CCD-103	CK-103	MGP01	TA110	TG-S10
C84	.01				CCD-103	CK-103	MGP01	TA110	TG-S10
C85	.01				CCD-103	CK-103	MGP01	TA110	TG-S10
C86	400	10%			CCD-401	DD-401		GP340	
C87	56	10%						CN0456	10TCC-Q56
C88	.01				CCD-103	CK-103	MGP01	TA110	TG-S10
C89	.01				CCD-103	CK-103	MGP01	TA110	TG-S10
C90	400	10%			CCD-401	DD-401		GP340	
C91	22				CCD-220	DD-220	NP022	GP422	10TS-Q22
C92	2					DTZ-2R2	NP02P2	CN0522	10TCC-V22
C93	.01				CCD-103	CK-103	MGP01	TA110	TG-S10
C95	.047				CCD-503	CK-503	MGP05	TA150	TG-S50
C96	.01				CCD-103	CK-103	MGP01	TA110	TG-S10
C100	.001				CCD-102	DM-102	GP1000	SM210	2SS-D10
C102	.01				CCD-103	CK-103	MGP01	TA110	TG-S10
C103	.056				1DP-2-563			PVC1156	225P56391WD3
C105	.047				CCD-503	CK-503	MGP05	TA150	TG-S50
C106	.022				CCD-203	CK-203	MGP02	TA120	TG-S20
C107	.022				CCD-203	CK-203	MGP02	TA120	TG-S20
C116	.001	150VAC				CI-102	AC-1000	UAC210	125L-D10
C117	.01				CCD-103	CK-103	MGP01	TA110	TG-S10
C118	.047				CCD-503	CK-503	MGP05	TA150	TG-S50
C119	.047				CCD-503	CK-503	MGP05	TA150	TG-S50
C120	.047				CCD-503	CK-503	MGP05	TA150	TG-S50
C121	.01				CCD-103	CK-103	MGP01	TA110	TG-S10
C122	.01				CCD-103	CK-103	MGP01	TA110	TG-S10
C123	.001				CCD-102	DM-102	GP1000	SM210	2SS-D10
VC				3291-12					

PARTS LIST AND DESCRIPTION (CONTINUED)

(When ordering parts, state Model, Part Number, and Description.)

CONTROLS (All wattages 1/2 watt, or less, unless listed)

ITEM No.	FUNCTION	RESIST-ANCE	REPLACEMENT DATA				
			MFGR. PART No.	CENTRALAB PART No.	CLAROSTAT PART No.	CTS—IRC PART No.	MALLORY PART No.
VR1	Volume/Switch	10K	1601-11 ERV-14)	F2-10K (1), SSK010, KR-1	A47-10K-Z (1), KSS-3, SWE-12 or [NP-10K-Z (1), UP-C-400, NWE-12]	Q13-116 (1), 76-1 or [BU1 (1), CF61, SS1, GC]*	RU14A, SL36, SL1500, US41 or [UA14A (1), SK750, US41] or [U18 (1), US26]
VR3	Squelch - (Monitor)	10K	1602-11 (ERV-38)				
VR2	Squelch - (Normal)	10K					
VR4	Meter Adjust	5000		TSV-5K (2) or [T-5000 (2)]	C-502 (2)	X201R502B (2)	MTC53L1 (2)
VR5	Squelch Range	10K		TSV-10K (2) or [T-10K (2)]	C-103 (2)	X201R103B (2)	MTC14L1 (2)
VR6	AGC	30K		TSV-50K (2) or [T-50K (2)]	C-503 (2)	X201R503B (2)	MTC54L1 (2)
VR7	Squelch Range	10K		TSV-10K (2) or [T-10K (2)]	C-103 (2)	X201R103B (2)	MTC14L1 (2)
VR8	Meter Adjust	5000		TSV-5K (2) or [T-5000 (2)]	C-502 (2)	X201R502B (2)	MTC53L1 (2)
VR9	Meter Adjust	5000		TSV-5K (2) or [T-5000 (2)]	C-502 (2)	X201R502B (2)	MTC53L1 (2)
VR10	Modulation	5000		TSV-5K (2) or [T-5000 (2)]	C-502 (2)	X201R502B (2)	MTC53L1 (2)

(1) Enlarge mounting hole. (2) Cut off one of the end terminals and bend to fit "PC" board.

RESISTORS (Power and Special)

ITEM No.	RATING	REPLACEMENT DATA	
		WORKMAN PART No.	MFGR. PART No.
PTH	150K (Cold)		2305-13 (EDP-1)
R100	200 2 Watt		2491-13

ITEM No.	RATING	REPLACEMENT DATA	
		WORKMAN PART No.	MFGR. PART No.
TH	35 (Cold)		2035-17 (14D47)

COILS (RF-IF)

ITEM No.	USE	REPLACEMENT DATA			
		PART No.	MEISSNER PART No.	MILLER PART No.	WORKMAN PART No.
L1	Monitor RF Input	2032-23			
L2	Monitor Interstage RF	2229-23			
L3	Monitor Oscillator	2234-23			
L4	Monitor Mixer Output/ IF Input	2003-24			
L5	RF Choke	1943-24			
L6	Monitor Interstage IF	1943-24			
L7	Monitor Output IF	1944-24			
L8	Antenna Matching	2032-23			
L9	Input RF	2032-23			
L10	Interstage RF	2229-23			
L11	RF Choke	2002-24			
L12	Input IF	1946-24			
L13	Rec. Oscillator	2230-23			
L14	Interstage IF	1942-24			
L15	Interstage IF	1943-24			
L16	Output IF	1944-24			
L17	Synthesizer Oscillator	2355-23			
L18	XMTR. Oscillator	2356-23			
L20	Bandpass Filter	2354-23			
L21	Bandpass Filter	2353-23			
L22	Buffer Output	2225-23			
L23	Driver Output	2226-23			
L24	RF Choke (4 turns)	2227-23			
L25	Antenna Peaking	2215-23			
L26	TVI Trap				
MF	Input IF	1950-24			
RFC1	RF Choke (2.75uh)			74F276AP	T814
RFC2	RF Choke (2.75uh)			74F276AP	T814
RFC3	RF Choke (2.75uh)			74F276AP	T814
RFC4	RF Choke (2.75uh)			74F276AP	T814
RFC5	RF Choke (.5uh)		19-1043		

(When ordering parts, state Model, Part Number, and Description.)

FILTER CHOKE

ITEM No.	RATINGS			REPLACEMENT DATA				NOTES
	CURRENT (Measured)	DC RES.	INDUCTANCE (0 CURRENT 1000~)	MFGR. PART No.	STANCOR PART No.	THORDARSON PART No.	TRIAD PART No.	
CH	67ma 132ma (1)	.7 ohm	55mh Tapped @ 43mh & 1mh	1662-15				(1) Transmit

TRANSFORMER (Power)

ITEM No.	RATING		REPLACEMENT DATA				NOTES
	PRI.	SEC. 1	MFGR. PART No.	STANCOR PART No.	THORDARSON PART No.	TRIAD PART No.	
T1	117VAC	23VAC CT	1661-15				

TRANSFORMER (Driver)

ITEM No.	TURNS RATIO			REPLACEMENT DATA				NOTES
	PRI.	SEC. 1	SEC. 2	MFGR. PART No.	STANCOR PART No.	THORDARSON PART No.	TRIAD Part No.	
T2	2	1CT		1596-15				

TRANSFORMER (Audio Output)

ITEM No.	IMPEDANCE		REPLACEMENT DATA				NOTES
	PRI.	SEC.	MFGR. PART No.	STANCOR PART No.	THORDARSON PART No.	TRIAD PART No.	
T3	56CT	16 ohm Tapped @ .4 ohm DC Resistance	1072-15				

SPEAKER

ITEM No.	TYPE	REPLACEMENT DATA		NOTES
		MFGR. PART No.	QUAM PART No.	
SP1	3" x 5" PM 16 ohms	1226-36	35A2CZ16	

PARTS LIST AND DESCRIPTION (CONTINUED)

(When ordering parts, state Model, Part Number, and Description.)

FUSE DEVICES

ITEM No.	DESCRIPTION	REPLACEMENT DATA						
		PART No.		BUSS PART No.		LITTELFUSE PART No.		WORKMAN PART No.
		DEVICE	HOLDER	DEVICE	HOLDER	DEVICE	HOLDER	DEVICE
F1	3AG .5 Amp	3827-20	1945-19	AGC 1/2	HKP	312.500	342012A	

MISCELLANEOUS

ITEM No.	PART NAME	PART No.	NOTES
M2	Meter	1160-27	"S"/RF
RY1	Relay	1052-37	Receive-Transmit
S2	Switch		Channel Selector
S3	Switch		Fine Tuning
S4	Switch	1763-14	Normal-Monitor
X1	Crystal	1226-35	38.275MC
X2	Crystal	1227-35	38.285MC
X3	Crystal	1228-35	38.295MC
X4	Crystal	1229-35	38.315MC
X5	Crystal	1230-35	38.375MC
X6	Crystal	1231-35	38.385MC
X7	Crystal	1232-35	38.395MC
X8	Crystal	1233-35	38.415MC
X9	Crystal	1234-35	38.475MC
X10	Crystal	1235-35	38.485MC
X11	Crystal	1236-35	38.495MC
X12	Crystal	1237-35	38.515MC
X13	Crystal	1238-35	11.260MC
X14	Crystal	1239-35	11.310MC
X15	Crystal	1240-35	11.715MC
X16	Crystal	1241-35	11.765MC

CABINETS & CABINET PARTS (When ordering specify model, chassis & color)

ITEM	PART No.
Knob, Tuning (Channel Selector)	1760-18
Knob, Volume	1761-18
Knob, Squelch (Small)	1762-18

ITEM	PART No.
Knob, Squelch (Large)	1763-18
Button, Monitor-Norm	1759-18

ACCESSORIES

ITEM	MFGR. PART No.	REMARKS
AC Cord	1221-38	
DC Cord	1222-38	
Microphone	1077-34	

For Supplier Address See PHOTOFACT Index

NOTE

ONLY THOSE PERSONS PROPERLY LICENSED ARE PERMITTED TO MAKE REPAIRS OR ADJUSTMENTS WHICH MAY RESULT IN ILLEGAL OPERATION. (REFER TO FCC RULES AND REGULATIONS PART 95, SUBPARTS C & D.)

The frequency of the transmitter should be checked periodically with a secondary frequency standard to insure proper and legal operation.

Best results will be obtained when adjusting the final RF output circuit if the antenna normally used is connected and the chassis is as nearly in the cabinet as possible.

Connect either 50-ohm dummy load or the normally used antenna system.

MODEL TRC-23B (21-128)

ALIGNMENT INSTRUCTIONS

Suggested Alignment Tools:	GC ELECTRONICS
T1,T2,T3	#9440
T4,T5,MF1	#9087,9089
T6	#5000
T9 Thru T11, T13 Thru T15, T20	#8728
T19	#9302

RECEIVER

Connect an AC VTVM across speaker voice coil. Adjust Volume control to obtain a suitable reading. Set squelch control fully counterclockwise.

SIGNAL GENERATOR	CHANNEL	ADJUST	REMARKS
High side thru .01mfd to base of Q3 (2nd Rec. Mixer), low side to ground. (Set to 455KC (Mod.)	Any	T6,T5, T4,MF1	Adjust for maximum.
High side thru .01mfd to antenna connector, low side to chassis. Set generator to 27.085MC (Mod) Channel 11).	11	T3,T2, T1, T20	Adjust for maximum.
Set generator output to .25uv. (Channel 11, Mod).	11	R15	Adjust for a reading of 2 volts.

TRANSMITTER

INDICATOR	ADJUST	REMARKS
RF Wattmeter or Field Strength meter.	T9 Thru T15	Key transmitter and adjust for maximum.
0-500ma DC Ammeter	T14	Insert meter in emitter circuit of Q18 (Final Amp.) Key transmitter and readjust T14 for 5 watts input.
Tunable Field Strength meter.	T19	Key transmitter and adjust T19 for MINIMUM 26MC output.

HOWARD W. SAMS & CO., INC. Indianapolis, Indiana 46206

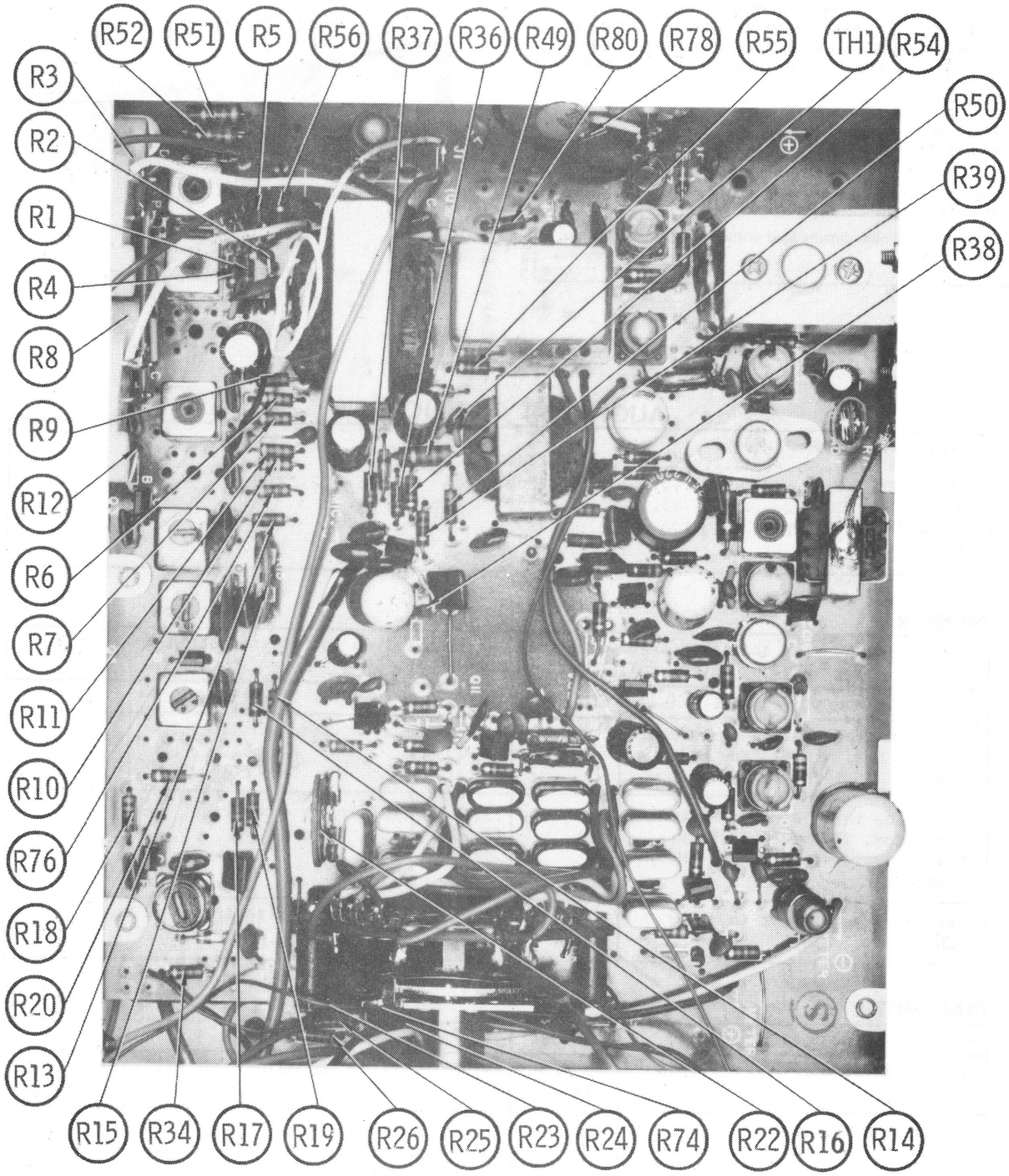
R52
R51
R5
R56
R37
R36
R49
R80
R78
R55
TH1
R54
R50
R39
R38
R3
R2
R1
R4
R8
R9
R12
R6
R7
R11
R10
R76
R18
R20
R13
R15
R34
R17
R19
R26
R25
R23
R24
R74
R22
R16
R14

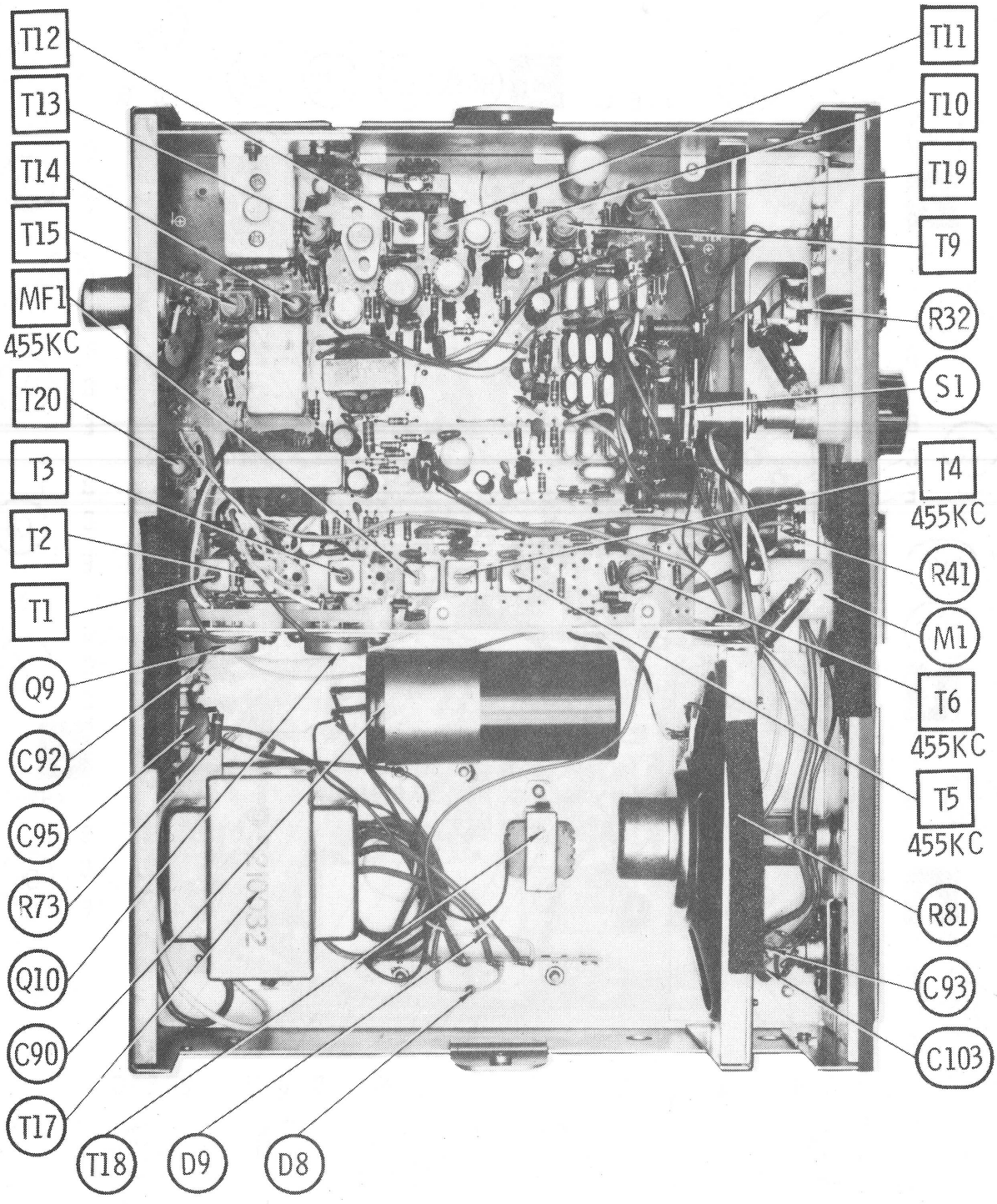
T12
T13
T14
T15
MF1
455KC
T20
T3
T2
T1
Q9
C92
C95
R73
Q10
C90
T17
T18
D9
D8
T11
T10
T19
T9
R32
S1
T4
455KC
R41
M1
T6
455KC
T5
455KC
R81
C93
C103

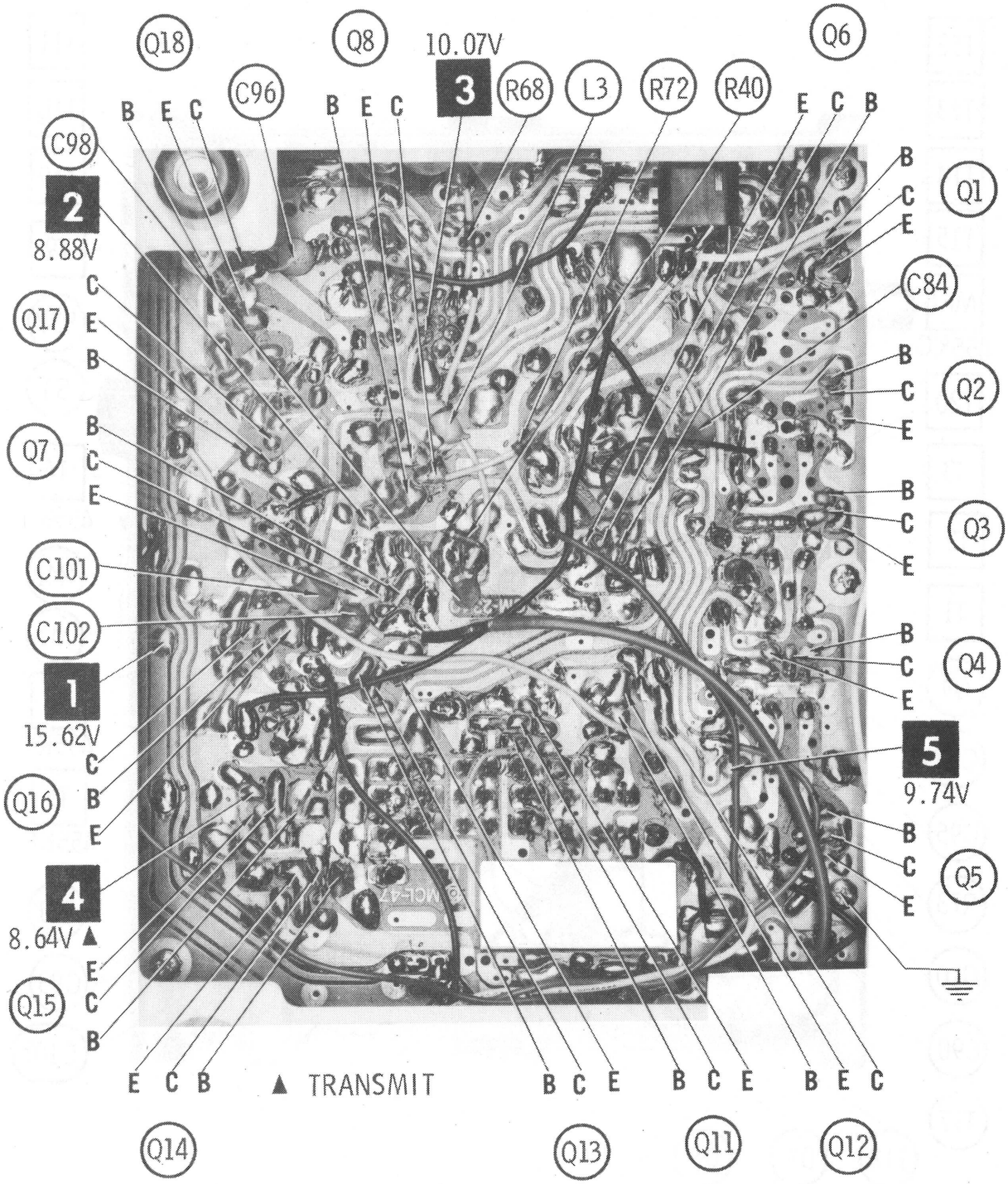

A Howard W. Sams CIRCUITRACE® Photo

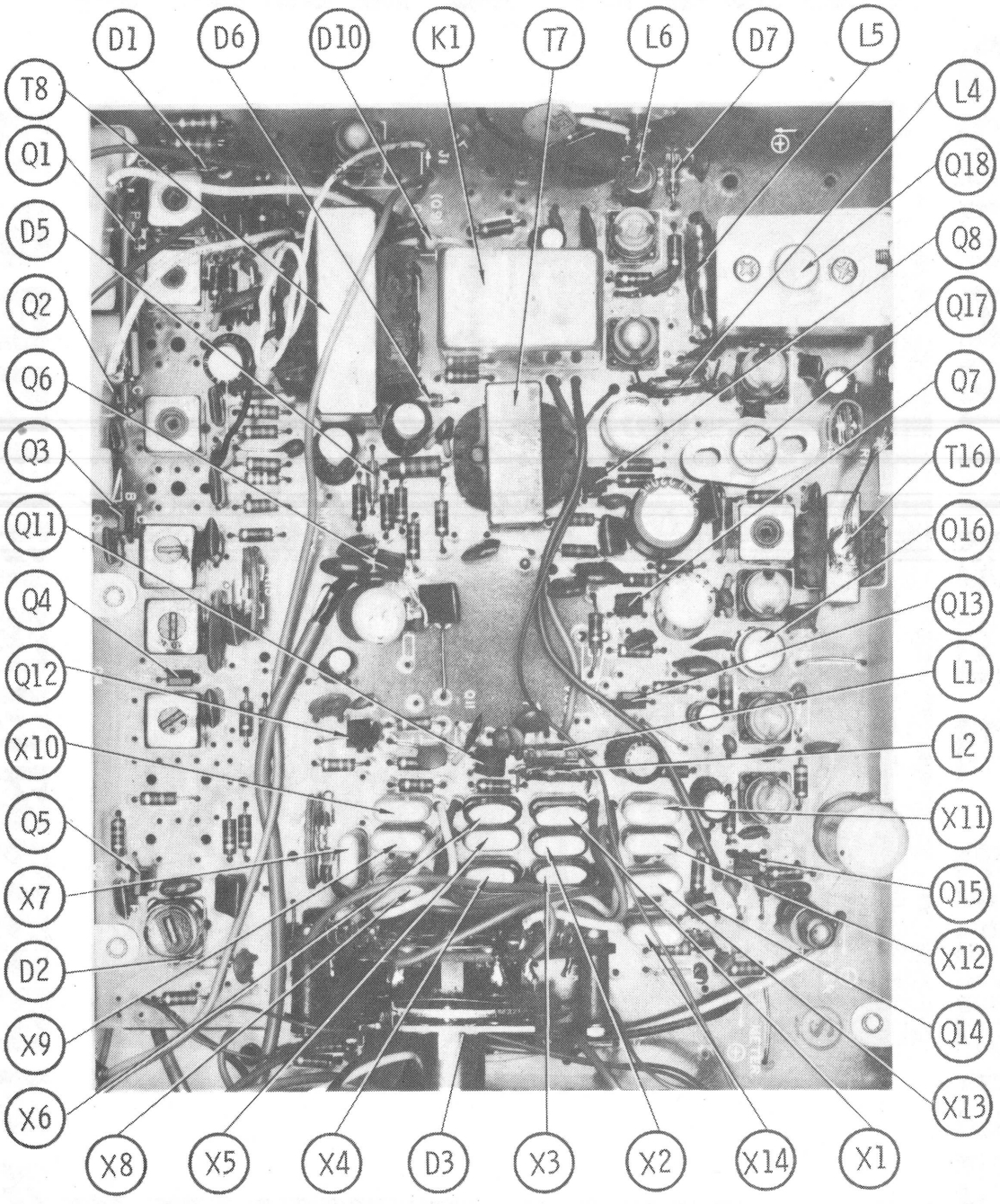
T8
Q1
D5
Q2
Q6
Q3
Q11
Q4
Q12
X10
Q5
X7
D2
X9
X6
X8
X5
X4
D3
X3
X2
X14
X1
X13
Q14
X12
Q15
X11
L2
L1
Q13
Q16
T16
Q7
Q17
Q8
Q18
L4
L5
D7
L6
T7
K1
D10
D6
D1

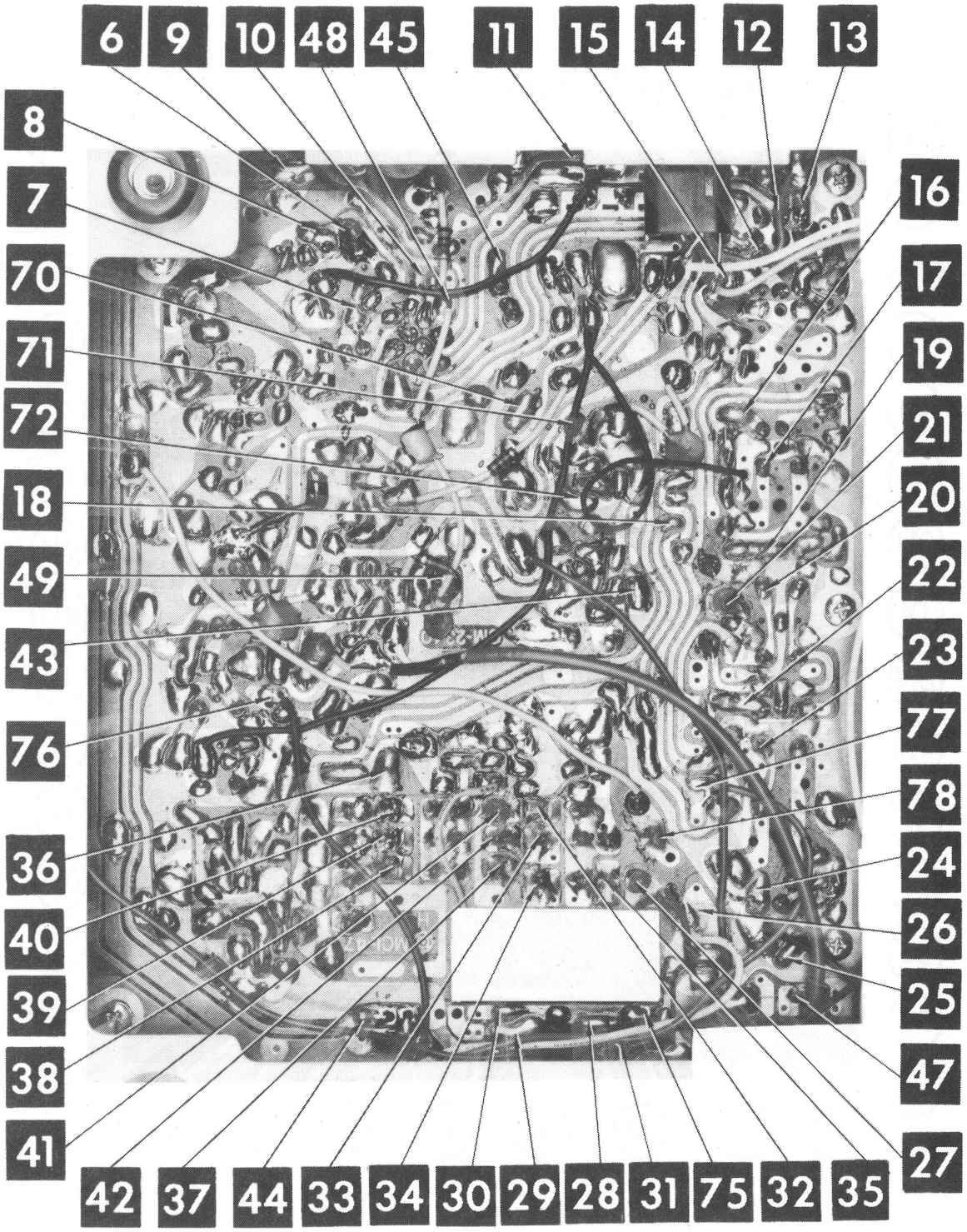

A Howard W. Sams CIRCUITRACE® Photo

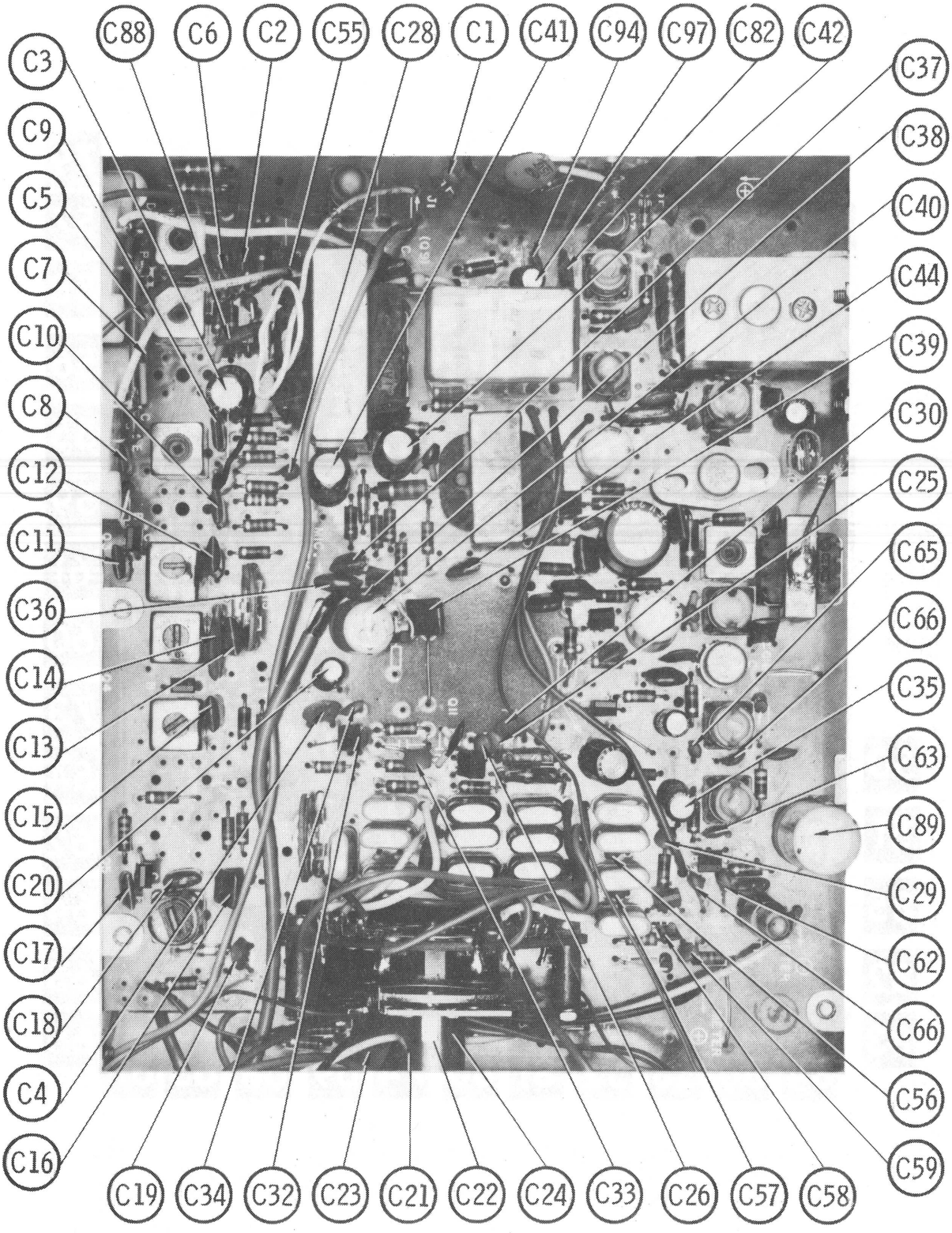
C88
C6
C2
C55
C28
C1
C41
C94
C97
C82
C42
C3
C9
C5
C7
C10
C8
C12
C11
C36
C14
C13
C15
C20
C17
C18
C4
C16
C37
C38
C40
C44
C39
C30
C25
C65
C66
C35
C63
C89
C29
C62
C66
C56
C59
C19
C34
C32
C23
C21
C22
C24
C33
C26
C57
C58

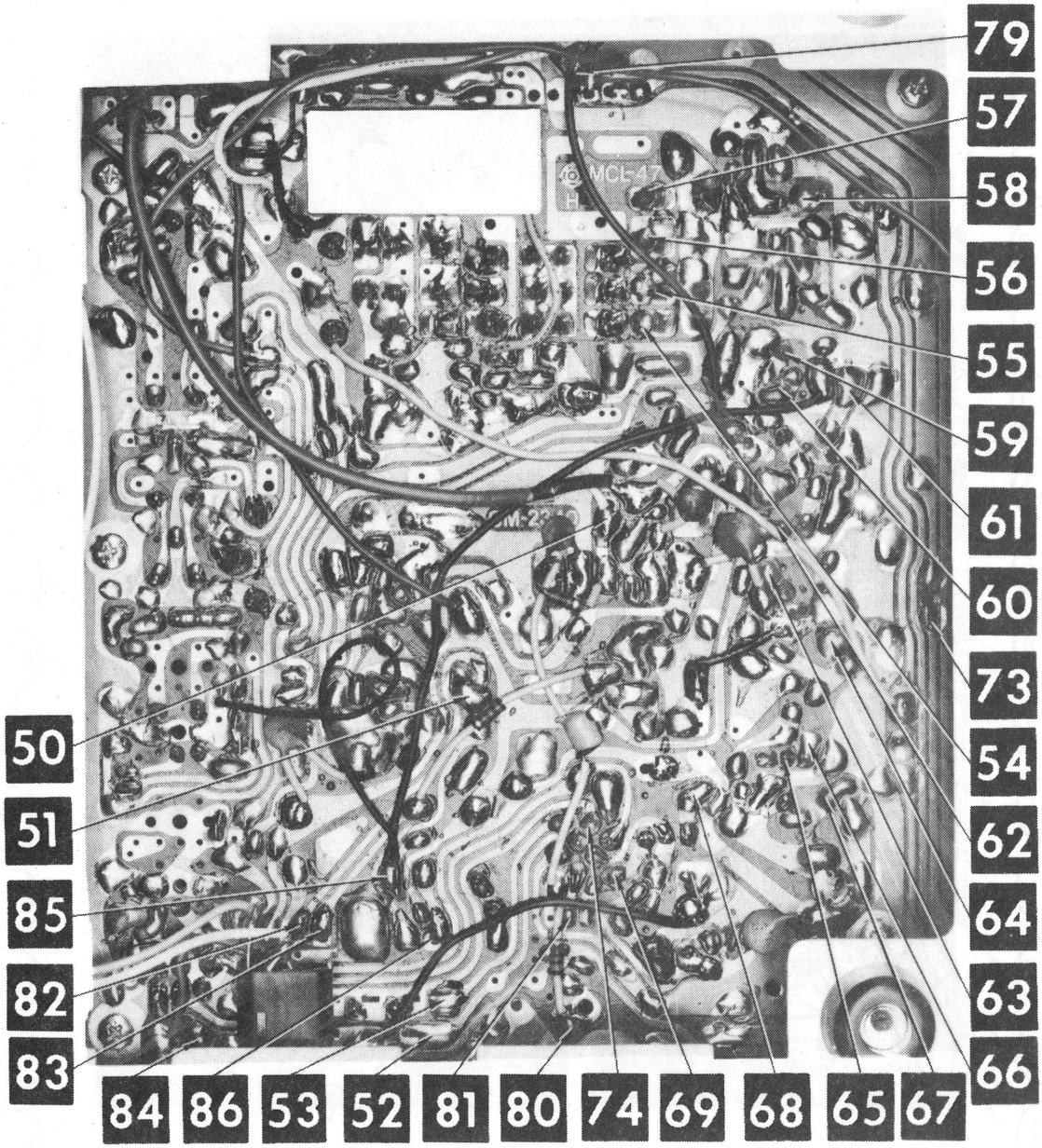

A Howard W. Sams CIRCUITRACE® Photo

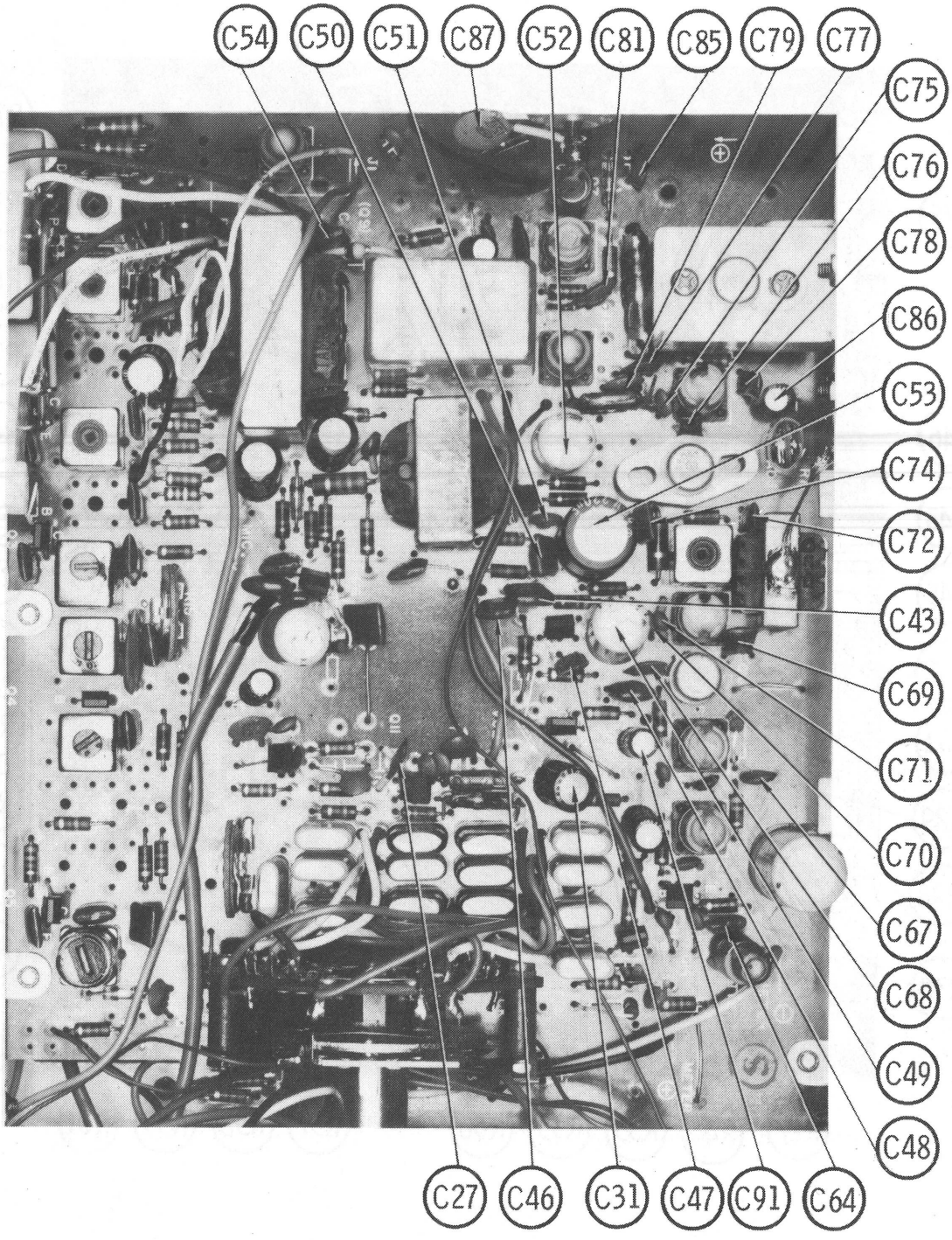
C54
C50
C51
C87
C52
C81
C85
C79
C77
C75
C76
C78
C86
C53
C74
C72
C43
C69
C71
C70
C67
C68
C49
C48
C27
C46
C31
C47
C91
C64

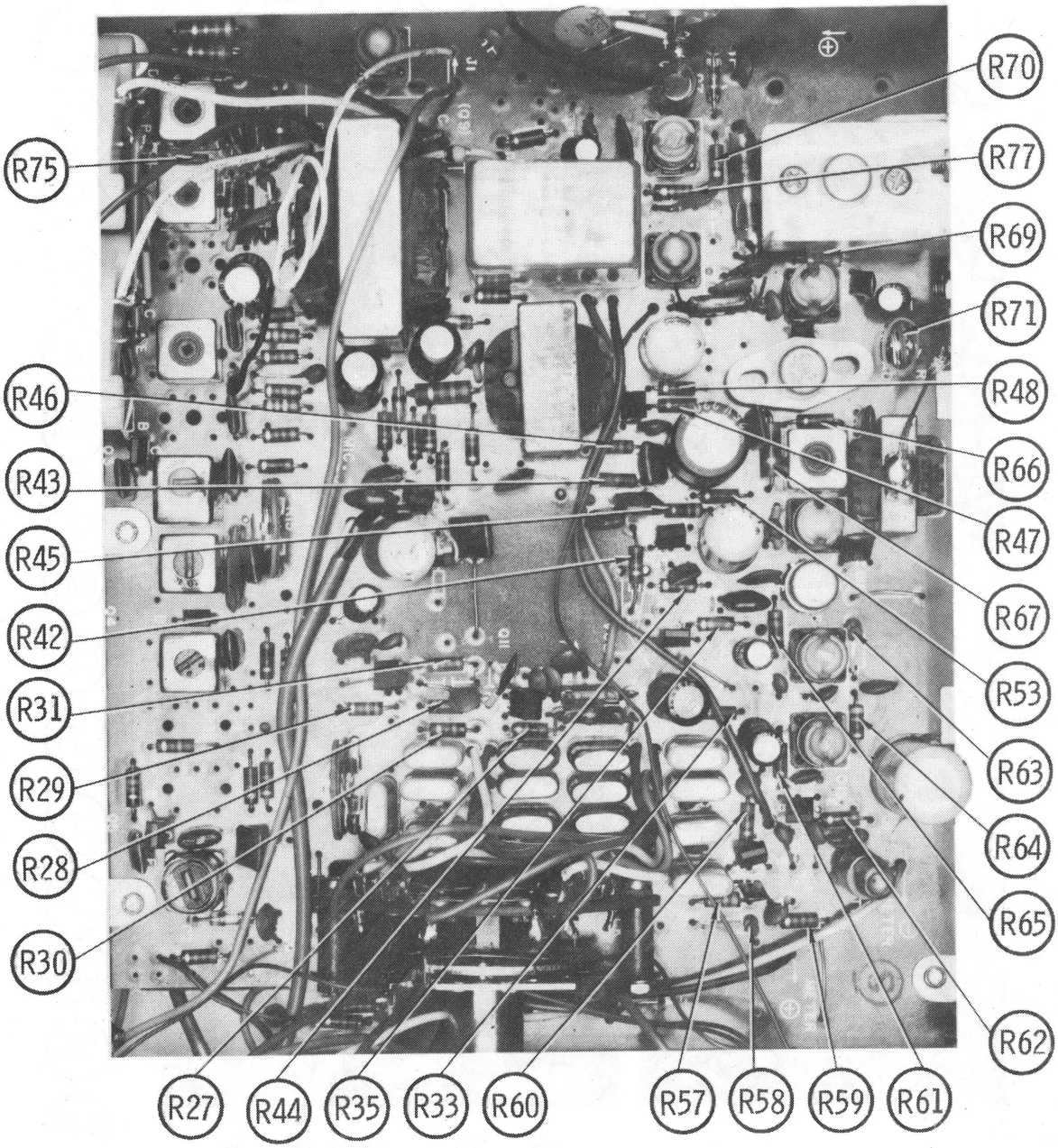
R75
R46
R43
R45
R42
R31
R29
R28
R30
R27
R44
R35
R33
R60
R57
R58
R59
R61
R62
R65
R64
R63
R53
R67
R47
R66
R48
R71
R69
R77
R70

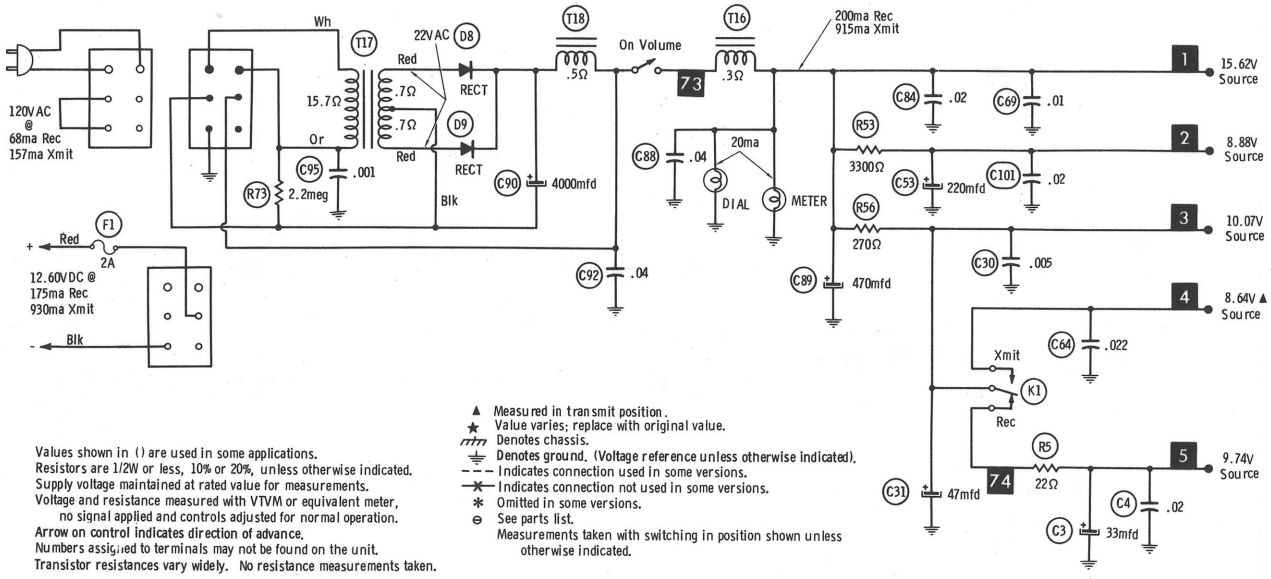

▲ Measured in transmit position.
★ Value varies; replace with original value.
Denotes chassis.
Denotes ground. (Voltage reference unless otherwise indicated).
– – – Indicates connection used in some versions.
—✕— Indicates connection not used in some versions.
✱ Omitted in some versions.
⊖ See parts list.
Measurements taken with switching in position shown unless otherwise indicated.

Values shown in () are used in some applications.
Resistors are 1/2W or less, 10% or 20%, unless otherwise indicated.
Supply voltage maintained at rated value for measurements.
Voltage and resistance measured with VTVM or equivalent meter, no signal applied and controls adjusted for normal operation.
Arrow on control indicates direction of advance.
Numbers assigned to terminals may not be found on the unit.
Transistor resistances vary widely. No resistance measurements taken.

A PHOTOFACT STANDARD NOTATION SCHEMATIC
with CIRCUITRACE

REALISTIC MODEL TRC-23B

PARTS LIST AND DESCRIPTION

(When ordering parts, state Model, Part Number, and Description.)

SEMICONDUCTORS

ITEM No.	TYPE / MFGR. No. / PART No.	REPLACEMENT DATA						
		GENERAL ELECTRIC PART No.	INTERNATIONAL RECTIFIER PART No.	MALLORY PART No.	MOTOROLA PART No.	RCA PART No.	SPRAGUE PART No.	SYLVANIA PART No.
D1	1N60/0575005	1N60	1N60	PTC206	HEP135	SK3088		ECG 109
D2	1N60/0575005	1N60	1N60	PTC206	HEP135	SK3088		ECG 109
D3	1N60/0575005	1N60	1N60	PTC206	HEP135	SK3088		ECG 109
D5	1N34(M)/0575001	1N34AS (7)	1N34A (7)	PTC207 (7)	HEP134 (7)	SK3087 (7)		ECG 110 (6)
D6	1N34(M)/0575001							
D7	1N60/0575005	1N60	1N60	PTC206	HEP135	SK3088		ECG 109
D8	V03C/5330001	GE-504A (2)	8D4 (2) or 5A4D (2)	PTC201 (2) or PTC202(2)	HEPR0052	SK3030 (2) or SK3031 (2)	RT214 (2) or RT215 (2)	ECG 116 (2)or ECG 117 (2)
D9	V03C/5330001				HEPR0052			
D10	HR-5A/5330041	GE-504A	8D4 or 5A4D	PTC201 or PTC202	HEPR0052	SK3030 or SK3031	RT213 or RT214	ECG 116 or ECG 117
Q1	2SC535A/0573486	GE-20	TR-21	PTC132	HEP56	SK3018	RT108	ECG 107
Q2	2SC460B/0573486	GE-20	TR-21	PTC121	HEP53	SK3018	RT108	ECG 107
Q3	2SC460B/0573486	GE-20	TR-21	PTC121	HEP53	SK3018	RT108	ECG 107
Q4	2SC454C(2SC454B)/ 0573491	GE-20	IRTR-51	PTC121	HEP56	SK3018	RT102	ECG 123A
Q5	2SC454C(2SC454B)/ 0573491	GE-20	IRTR-51	PTC121	HEP56	SK3018	RT102	ECG 123A
Q6	2SC458C(LG) (2SC458B(LG)/ 5320022	GE-20	IRTR-51	PTC121	HEP53	SK3124	RT102	ECG 123A
Q7	2SC458C(LG) (2SC458B(LG)/ 5320022	GE-20	IRTR-51	PTC121	HEP53	SK3124	RT102	ECG 123A
Q8	2SC458C/0573481	GE-20	IRTR-51	PTC121	HEP53	SK3124	RT102	ECG 123A
Q9	2SB337/0573040	GE-16 (7)	TR-01 (7)	PTC105 (7)	HEP232 (7)	SK3009 (7)	RT127 (7)	ECG 121MP (6)
Q10	2SB337/0573040							
Q11	2SC460B/0573486	GE-20	TR-21	PTC121	HEP53	SK3018	RT108	ECG 107
Q12	2SC454C(2SC454B)/ 0573491	GE-20	IRTR-51	PTC121	HEP56	SK3018	RT102	ECG 123A
Q13	2SC458D/(2SC458B-D) 5320067	GE-20	IRTR-51	PTC121	HEP53	SK3124	RT102	ECG 123A
Q14	2SC454C/0573491	GE-20	IRTR-51	PTC121	HEP56	SK3018	RT102	ECG 123A
Q15	2SC717/5320051	GE-17	TR-21	PTC115	HEP56	SK3039	RT108	ECG 108
Q16	2SC150T/0573517	GE-20	TR-24	PTC121	HEP75	SK3018	RT102	ECG 128
Q17	2SC608T/5320151	GE-18	TR-25	PTC143	HEPS3001	SK3024	RT114	ECG 128
Q18	2SC609T/(A)0573541					SK3049		

(2) Two Required (6) Matched Pair (7) Two Required - Select Matched Pair

(CONTINUED ON PAGE 100)

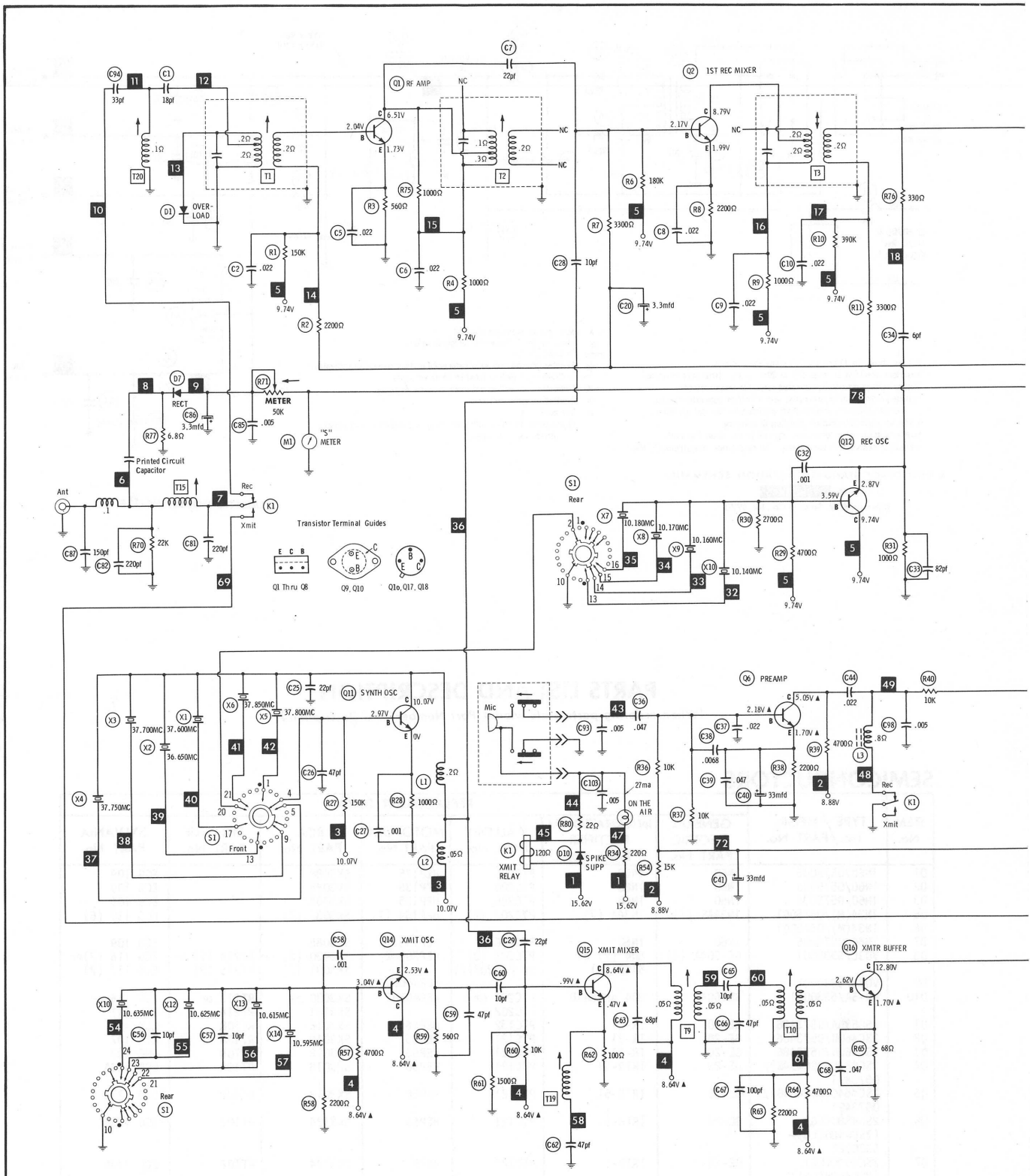

Measurements taken with switching in position shown unless otherwise indicated.
Values shown in ( ) are used in some applications.
Resistors are 1/2W or less, 10% or 20%, unless otherwise indicated.
Supply voltage maintained at rated value for measurements.
Voltage and resistance measured with VTVM or equivalent meter, no signal applied and controls adjusted for normal operation.
Arrow on control indicates direction of advance.
Numbers assigned to terminals may not be found on the unit.
Transistor resistances vary widely. No resistance measurements taken.

● Measured with unit squelched.
▲ Measured in transmit position.
Denotes chassis.
Denotes ground. (Voltage reference unless otherwise indicated).
- - - Indicates connection used in some versions.
—✕— Indicates connection not used in some versions.
✱ Omitted in some versions.
⊖ See parts list.
★ Value varies; replace with original value.

A PHOTOFACT STANDARD NOTATION SCHEMATIC
with CIRCUITRACE®

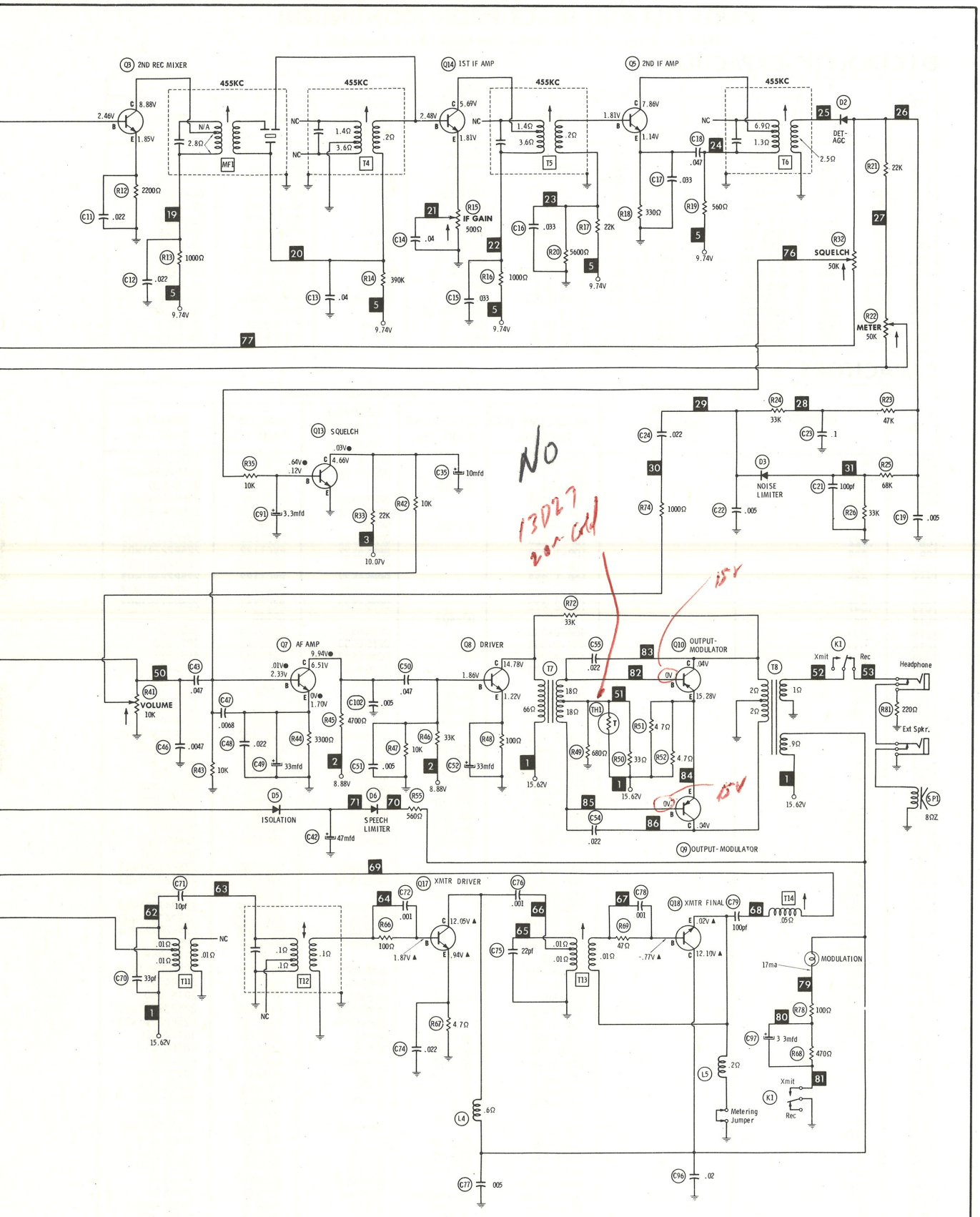

REALISTIC MODEL TRC-23B

PARTS LIST AND DESCRIPTION (CONTINUED)

(When ordering parts, state Model, Part Number, and Description.)

ELECTROLYTIC CAPACITORS

ITEM No.	RATING		REPLACEMENT DATA						
			MFGR. PART No.	ARCO PART No.	CENTRALAB PART No.	CORNELL-DUBILIER PART No.	GENERAL ELECTRIC PART No.	MALLORY PART No.	SPRAGUE PART No.
C3	33	16V	1252523	ME-3-E-035	EP15-25	WBR35-50	MT1-13.5	MTV30CB25	EV-1325
C20	3.3	16V	0252513	RME-A-E-003	EP15-5	WBR5-50	MT1-3	MTV3CB50	EV-1318
C31	47	16V	0252525	RME-E-E-050	EP15-50	WBR50-25	MT1-16	MTV50CB15	EV-1226
C35	10	16V	0252521	RME-B-E-010	EP15-10	WBR10-25	MT1-5	MTV10CB50	EV-1222
C40	33	16V	0251080	RME-B-G-010	EP30-10	WBR10-25	MT1-5	MTV10CB50	EV-1322
C41	33	16V	0251080	RME-B-G-010	EP30-10	WBR10-25	MT1-5	MTV10CB50	EV-1322
C42	47	16V	0252525	RME-E-E-050	EP15-50	WBR50-25	MT1-16	MTV50CB15	EV-1226
C49	33	16V	0251080	RME-B-G-010	EP30-10	WBR10-25	MT1-5	MTV10CB50	EV-1322
C52	33	16V	0251080	RME-B-G-010	EP30-10	WBR10-25	MT1-5	MTV10CB50	EV-1322
C53	220	16V	0252532	ME-6-E-200	EA15-250	WBR250-16	MT1-23	MTV200DE15	EV-1240
C86	3.3	16V	0252513	RME-A-E-003	EP15-5	WBR5-50	MT1-3	MTV3CB50	EV-1318
C89	470	16V	0252535	RME-L-E-500	EA15-500	WBR500-16	QT1-30A	MTV500DN15	EV-1250
C90	4000	25V	0259704			WBR5000-50		FP060.4A	TVL-1246
C91	3.3	16V	0252513	RME-A-E-003	EP15-5	WBR5-50	MT1-3	MTV3CB50	EV-1318
C97	3.3	16V	0252513	RME-A-E-003	EP15-5	WBR5-50	MT1-3	MTV3CB50	EV-1318

CAPACITORS

ITEM No.	RATING	MFGR. PART No.	REPLACEMENT DATA				
			ARCO/ELMENCO PART No.	CENTRALAB PART No.	CORNELL-DUBILIER PART No.	MALLORY PART No.	SPRAGUE PART No.
C1	18		CCT0-180		NP018	CN0418	10TCC-Q18
C2	.022		1DP-1-223		DPMS6S22	PVC1122	225P22391WD3
C4	.02		CCD-203	DD-203		GP120	10TS-S20
C5	.022		1DP-1-223		DPMS6S22	PVC1122	225P22391WD3
C6	.022		1DP-1-223		DPMS6S22	PVC1122	225P22391WD3
C7	22		CCT0-200	DTZ-20	NP020	CN0420	10TCC-Q20
C8	.022		1DP-1-223		DPMS6S22	PVC1122	225P22391WD3
C9	.022		1DP-1-223		DPMS6S22	PVC1122	225P22391WD3
C10	.022		1DP-1-223		DPMS6S22	PVC1122	225P22391WD3
C11	.022		1DP-1-223		DPMS6S22	PVC1122	225P22391WD3
C12	.022		1DP-1-223		DPMS6S22	PVC1122	225P22391WD3
C13	.047		1DP-2-473		DPMS6S47	PVC1147	225P47391WD3
C14	.04			DD-403		GP140	
C15	.033		4DP-2-333		DPMS6S33	PVC6133	4PS-S33
C16	.033		4DP-2-333		DPMS6S33	PVC6133	4PS-S33
C17	.033		4DP-2-333		DPMS6S33	PVC6133	4PS-S33
C18	.047		1DP-2-473		DPMS6S47	PVC1147	225P47391WD3
C19	.005		CCD-502	DD-502	GP5000	JF250	10TS-D50
C21	100		CCD-101	DD-101	GP100	GP310	10TS-T10
C22	.005		CCD-502	DD-502	GP5000	JF250	10TS-D50
C23	.1			CK-104		TA010	TG-P10
C24	.022		1DP-1-223		DPMS6S22	PVC1122	225P22391WD3
C25	22		CCT0-200	DTZ-20	NP020	CN0420	10TCC-Q20
C26	47		CCT0-470	DTZ-47	NP047	CN0447	10TCC-Q47
C27	.001		6DP-1-102	DD-102	DPMS6D1	PVC621	6PS-D10
C28	10		CCT0-100	DTZ-10	NP010	CN0410	10TCC-Q10
C29	22		CCT0-200	DTZ-20	NP020	CN0420	10TCC-Q20
C30	.005		CCD-502	DD-502	GP5000	JF250	10TS-D50
C32	.001		6DP-1-102	DD-102	DPMS6D1	PVC621	6PS-D10
C33	82		CCT0-820	DTZ-82	NP082	CN0482	10TCC-Q82
C34	6						10TCC-V56
C36	.047		1DP-2-473		DPMS6S47	PVC1147	225P47391WD3
C37	.022		1DP-1-223		DPMS6S22	PVC1122	225P22391WD3
C38	.0068		CCD-682	DD-682		JF268	10TS-D68
C39	.047		1DP-2-473		DPMS6S47	PVC1147	225P47391WD3
C43	.047		1DP-2-473		DPMS6S47	PVC1147	225P47391WD3
C44	.022		1DP-1-223		DPMS6S22	PVC1122	225P22391WD3
C46	.0047		6DP-1-472		DMS6D47	PVC6247	6PS-D47
C47	.0068		CCD-682	DD-682		JF268	10TS-D68
C48	.022		1DP-1-223		DPMS6S22	PVC1122	225P22391WD3
C50	.047		1DP-2-473		DPMS6S47	PVC1147	225P47391WD3
C51	.005		CCD-502	DD-502	GP5000	JF250	10TS-D50
C54	.022		1DP-1-223		DPMS6S22	PVC1122	225P22391WD3
C55	.022		1DP-1-223		DPMS6S22	PVC1122	225P22391WD3
C56	10		CCT0-100	DTZ-10	NP010	CN0410	10TCC-Q10
C57	10		CCT0-100	DTZ-10	NP010	CN0410	10TCC-Q10
C58	.001		6DP-1-102	DD-102	DPMS6D1	PVC621	6PS-D10
C59	47		CCT0-470	DTZ-47	NP047	CN0447	10TCC-Q47
C60	10		CCT0-100	DTZ-10	NP010	CN0410	10TCC-Q10
C62	47		CCT0-470	DTZ-47	NP047	CN0447	10TCC-Q47
C63	68			DTZ-68		CN0468	10TCC-Q68
C64	.022		1DP-1-223		DPMS6S22	PVC1122	225P22391WD3
C65	10		CCT0-100	DTZ-10	NP010	CN0410	10TCC-Q10
C66	47		CCT0-470	DTZ-47	NP047	CN0447	10TCC-Q47
C67	100		CCT0-101	DTZ-100	NP0100	CN0310	10TCC-T10
C68	.047		4DP-3-473		DPMS6S47	PVC4147	4PS-S47
C69	.01		4DP-1-103	CPR-10000J	DPMS6S1	PVC211	2TM-S10
C70	33		CCT0-330	DTZ-33	NP033	CN0433	10TCC-Q33
C71	10		CCT0-100	DTZ-10	NP010	CN0410	10TCC-Q10
C72	.001		6DP-1-102	DD-102	DPMS6D1	PVC621	6PS-D10
C74	.022		1DP-1-223		DPMS6S22	PVC1122	225P22391WD3
C75	22		CCT0-200	DTZ-20	NP020	CN0420	10TCC-Q20
C76	.001		6DP-1-102	DD-102	DPMS6D1	PVC621	6PS-D10
C77	.005		CCD-502	DD-502	GP5000	JF250	10TS-D50
C78	.001		6DP-1-102	DD-102	DPMS6D1	PVC621	6PS-D10
C79	100		CCD-101	DD-101	GP100	GP310	10TS-T10
C81	220		CCD-221	DD-221	GP220	GP322	10TS-T22
C82	220		CCD-221	DD-221	GP220	GP322	10TS-T22

PARTS LIST AND DESCRIPTION (CONTINUED)

(When ordering parts, state Model, Part Number, and Description.)

CAPACITORS (cont)

ITEM No.	RATING	MFGR. PART No.	REPLACEMENT DATA				
			ARCO/ELMENCO PART No.	CENTRALAB PART No.	CORNELL-DUBILIER PART No.	MALLORY PART No.	SPRAGUE PART No.
C84	.02		CCD-203	DD-203		GP120	10TS-S20
C85	.005		CCD-502	DD-502	GP5000	JF250	10TS-D50
C87	150		CCD-151	DD-151	GP150	GP315	10TS-T15
C88	.04			DD-403		GP140	
C92	.04			DD-403		GP140	
C93	.005		1DP-1-502	CPR-5000J	DPMS6D5	PVC625	6PS-D50
C94	33		CCTO-330	DTZ-33	NPO33	CNO433	10TCC-Q33
C95	.001		6DP-1-102	DD-102	DPMS6D1	PVC621	6PS-D10
C96	.02		CCD-203	DD-203		GP120	10TS-S20
C98	.005		CCD-502	DD-502	GP5000	JF250	10TS-D50
C101	.02		CCD-203	DD-203		GP120	10TS-S20
C102	.005		CCD-502	DD-502	GP5000	JF250	10TS-D50
C103	.005		CCD-502	DD-502	GP5000	JF250	10TS-D50

CONTROLS (All wattages 1/2 watt, or less, unless listed)

ITEM No.	FUNCTION	RESIST-ANCE	REPLACEMENT DATA				
			MFGR. PART No.	CENTRALAB PART No.	CLAROSTAT PART No.	CTS—IRC PART No.	MALLORY PART No.
R15	Gain	500	0151083	TSV-500 or T-500	C-501	X201R501B	MTC52L1
R22	Meter Adjust	50K	0151087	TSV-50K or T-50K	C-503	X201R503B	MTC54L1
R32	Squelch	50K	0153412	F2-50K(1), SSK014	A47-50K-Z(1), KSS-3 or [NP-50K-Z(1), UP-C-400]	Q13-123(1) or [BU1(1),CF63, SS1,DC1]*	RU54A,SL36,SL1500 or [UA54A(1), SK1000] or U33(1)
R41	Volume/Switch	10K	0153725	F2-10K(1), SSK014,KR-1	A47-10K-Z(1), KSS-3,SWE-12 or [NP-10K-Z(1), UP-C-400, NWE-12]	Q13-116(1),76-1 or [BU1(1),CF61, SS1,GC]*	RU14A,SL36,SL1500, US41 or [UA14A(1), SK1000,US41] or [U18(1),US26]
R71	Meter Adjust	50K	0151041	TSV-50K(2) or T-50K (2)	C-503(2)	X201R503B (2)	MTC54L1 (2)

* "SNAPTROL" (1) Enlarge mounting hole. (2) Cut off one of the end terminals and bend to fit "PC" board.

RESISTORS TNI 20-GR 0576031 (13D27) No

COILS (RF-IF)

ITEM No.	USE	REPLACEMENT DATA			
		PART No.	MEISSNER PART No.	MILLER PART No.	WORKMAN PART No.
L1	RF Choke (1uh)	0318545	19-1000	74F106AP	T806
L2	RF Choke (.22uh)	0318544	19-2003	4584	T957
L3	RF Choke (12uh)	5152015		72F125AP	
L4	RF Choke (3.3uh)	5150123	19-2012	74F336AP	T816
L5	RF Choke (2.2uh)	0318546	19-2011	74F226AP	T812
L6	RF Choke (.33uh)	5150071	19-2004	4586	TA811
MF1	Input IF	5132081		8814	
T1	Antenna Matching	5120098			
T2	RF	5120099			
T3	1st Rec. Mixer	0322341			
T4	Interstage IF	0322146	19-9027	2067	
T5	Interstage IF	0322146	19-9027	2067	
T6	Output IF	5136022		8518	
T9	Xmtr Mixer	0317192			
T10	Xmtr Buffer Input	0317193			
T11	Xmtr Buffer Output	0317194			
T12	Xmtr Driver Input	0317175			
T13	Xmtr Driver Output	0317195			
T14	Final	0317196			
T15	Pi Network	5123007			
T19	Xmtr Mixer Matching	0317180			
T20	Antenna Matching	5123008			

FILTER CHOKE

ITEM No.	RATINGS			REPLACEMENT DATA				NOTES
	CURRENT (Measured)	DC RES.	INDUCTANCE (0 CURRENT 1000~)	MFGR. PART No.	STANCOR PART No.	THORDARSON PART No.	TRIAD PART No.	
T16	200maDC (1) 915maDC (2)	.3	2.8mh	5220001				
T18	205maDC(1) 920maDC(2)	.5	7.4mh	5220028				(1) Rec. (2) Xmit

PARTS LIST AND DESCRIPTION (CONTINUED)

(When ordering parts, state Model, Part Number, and Description.)

TRANSFORMER (Driver)

ITEM No.	TURNS RATIO			REPLACEMENT DATA				NOTES
	PRI.	SEC. 1	SEC. 2	MFGR. PART No.	STANCOR PART No.	THORDARSON PART No.	TRIAD Part No.	
T7	2	1	1	0441115				

TRANSFORMER (Audio Output)

ITEM No.	IMPEDANCE		REPLACEMENT DATA				NOTES
	PRI.	SEC.	MFGR. PART No.	STANCOR PART No.	THORDARSON PART No.	TRIAD PART No.	
T8	32	8	0452047				

TRANSFORMER (Power)

ITEM No.	RATING		REPLACEMENT DATA				NOTES
	PRI.	SEC. 1	MFGR. PART No.	STANCOR PART No.	THORDARSON PART No.	TRIAD PART No.	
T17	120VAC @ 68maAC 157maAC	22VAC/CT @205maDC 920maCD	5210031				

SPEAKER

ITEM No.	TYPE	REPLACEMENT DATA		NOTES
		MFGR. PART No.	QUAM PART No.	
SP1	3" x 4-3/4" PM, 8 ohms	5410691		

FUSE DEVICES

ITEM No.	DESCRIPTION	REPLACEMENT DATA						
		PART No.		BUSS PART No.		LITTELFUSE PART No.		WORKMAN PART No.
		DEVICE	HOLDER	DEVICE	HOLDER	DEVICE	HOLDER	DEVICE
F1	2 Amp 250V	0591138		AGC2	HDJ	312002	150145	

MISCELLANEOUS

ITEM No.	PART NAME	PART No.	NOTES
K1	Relay	5640121	Receive/Transmit
S1	Switch	5610014	Channel Selector
X1	Crystal	0599783	37.600MC
X2	Crystal	0599784	37.650MC
X3	Crystal	0599785	37.700MC
X4	Crystal	0599786	37.750MC
X5	Crystal	0599787	37.800MC
X6	Crystal	0599788	37.850MC
X7	Crystal	0599792	10.180MC
X8	Crystal	0599791	10.170MC
X9	Crystal	0599790	10.160MC
X10	Crystal	0599789	10.140MC
X11	Crystal	0599796	10.635MC
X12	Crystal	0599795	10.625MC
X13	Crystal	0599794	10.615MC
X14	Crystal	0599793	10.595MC
	Microphone	5420184	

WIRING DATA

General-use Hook-up Wire ..... Use BELDEN No. 8530 (Solid) Available in 12 Colors
8524 (Stranded) Available in 12 Colors

Shielded Antenna Lead ..... Use BELDEN No. 8214 Lowest-loss (RG-8/U Type)
8237 Low-loss (RG-8/U)
8240 (Solid) Miniature (RG-58/U)
8259 (Stranded) Miniature (RG-58A/U)

Coiled Microphone Cable ..... Use BELDEN No. 8497 3-Conductor,1 Shielded,for Press-to-Talk (Neoprene)
8496 3-Conductor,1 Shielded,for Press-to-Talk (Vinyl)

Ignition Noise Suppression ..... Use BELDEN No. 7300-Series Spark-Plug Sets

Bonding Strap ..... Use BELDEN No. 8661 (3/8 In.)