SAMS

PHOTOFACT®

CB RADIO SERIES

CB-34

34

JUNE 1971

CONTENTS

TRADE NAME AND MODEL	PAGE
ALLIED	
A-2559 (21B5559U)	5
B & K	
Cobra 6	15
COURIER	
Citation	29
FANON	
SFT-800A	45
LAFAYETTE	
Micro-12	57
MIDLAND	
13-133E	67
ROBYN	
J-123	77
TRAM	
Titan III	91
TRUETONE	
MIC4812B-17 (DC4812B)	117

HOWARD W. SAMS & CO., INC. Indianapolis, Indiana

NOTE

ONLY THOSE PERSONS PROPERLY LICENSED ARE PERMITTED TO MAKE REPAIRS OR ADJUSTMENTS WHICH MAY RESULT IN ILLEGAL OPERATION. (REFER TO FCC RULES AND REGULATIONS PART 95, SUBPARTS C & D.)

The frequency of the transmitter should be checked periodically with a secondary frequency standard to insure proper and legal operation.

Best results will be obtained when adjusting the final RF output circuit if the antenna normally used is connected and the chassis is as nearly in the cabinet as possible.

Connect either 50-ohm dummy load or the normally used antenna system.

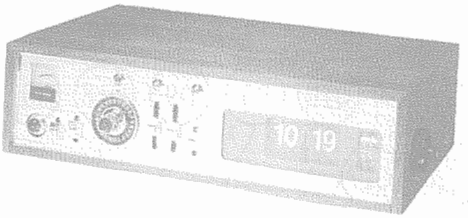

MODEL CITATION

ALIGNMENT INSTRUCTIONS

Suggested Alignment Tools:
A1 thru A5, A7, A11, A12, A13, A15 thru A18.....GENERAL CEMENT #8868, 9089
A6, A8, A9, A10, A14, A19.....GENERAL CEMENT #8606, 9440

RECEIVER

Connect an AC VTVM across speaker voice coil. Set Volume and Squelch control fully clockwise.

SIGNAL GENERATOR	CHANNEL	ADJUST	REMARKS
High side thru .01mfd to base of Q3 (2nd Mixer), low side to chassis. Tune to 455KC (Mod.)	Any	A1, A2, A3	Adjust for maximum.
High side thru .01mfd to antenna connector, low side to chassis. Tune to 27.085MC (Mod.).	11	A4 thru A8	Adjust for maximum.
	Any	A9	Adjust to eliminate interference from any 9MC Source.
High side thru .01mfd to antenna connector, low side to chassis. Tune to 27.0837MC (Mod.).	11	A10	Set Delta Tuner switch to minus (-) side. Adjust A10 for maximum.
High side thru .01mfd to antenna connector, low side to chassis. Tune to 27.0863MC (Mod.).	11	A11	Set Delta Tune switch to plus (+) side. Adjust A11 for maximum.

TRANSMITTER

INDICATOR	ADJUST	REMARKS
RF wattmeter or Field Strength meter	A12 thru A18	Adjust for maximum.
0-500ma DC Ammeter	A17	Remove meter jumper and insert meter. Readjust A17 for 5 watts input.
Television	A19	Key transmitter and adjust for MIMIMUM interference on TV.

HOWARD W. SAMS & CO., INC. Indianapolis, Indiana 46206
 1CY013

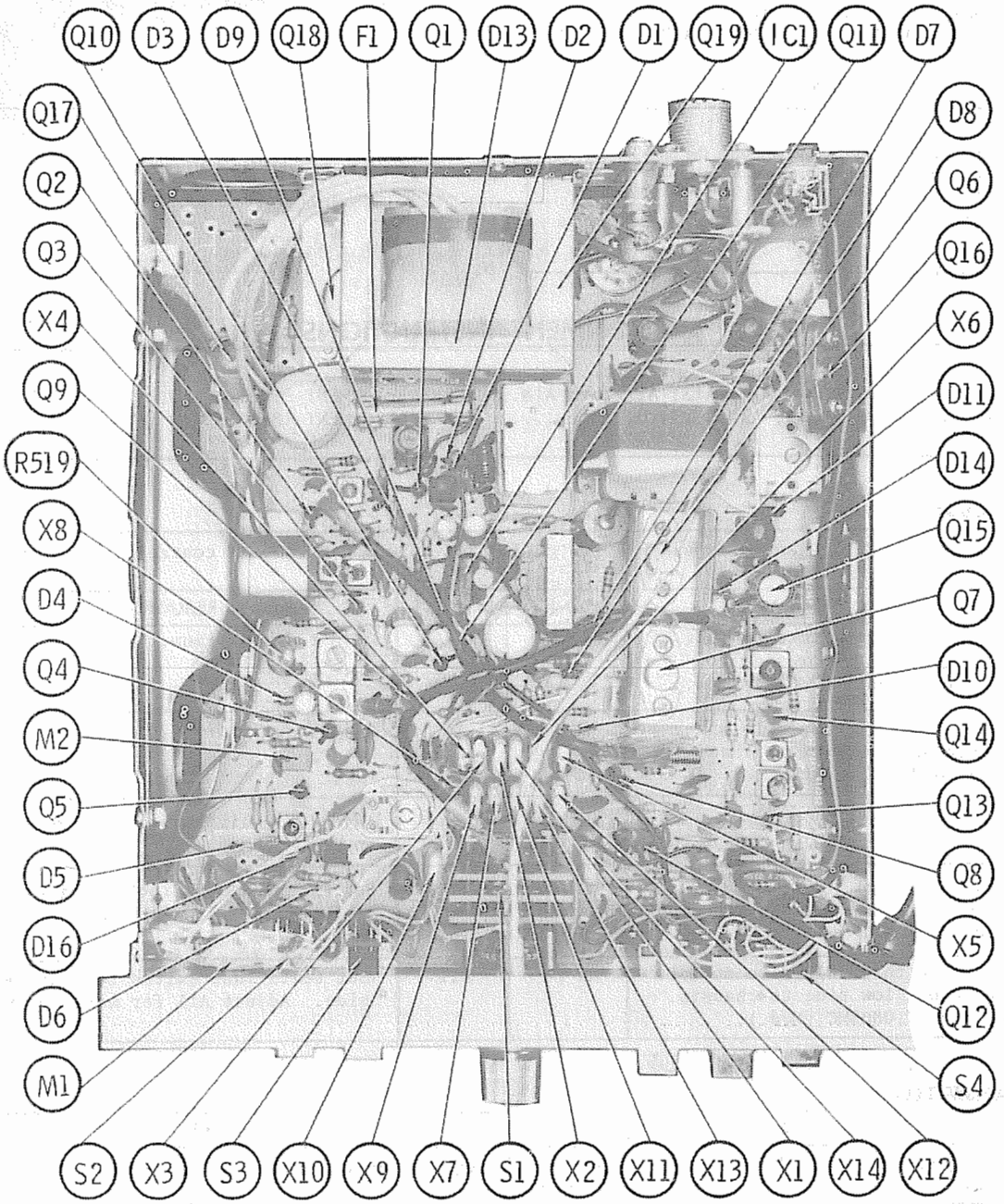
Q10
D3
D9
Q18
F1
Q1
D13
D2
D1
Q19
IC1
Q11
D7
Q17
Q2
Q3
X4
Q9
R519
X8
D4
Q4
M2
Q5
D5
D16
D6
M1
D8
Q6
Q16
X6
D11
D14
Q15
Q7
D10
Q14
Q13
Q8
X5
Q12
S4
S2
X3
S3
X10
X9
X7
S1
X2
X11
X13
X1
X14
X12

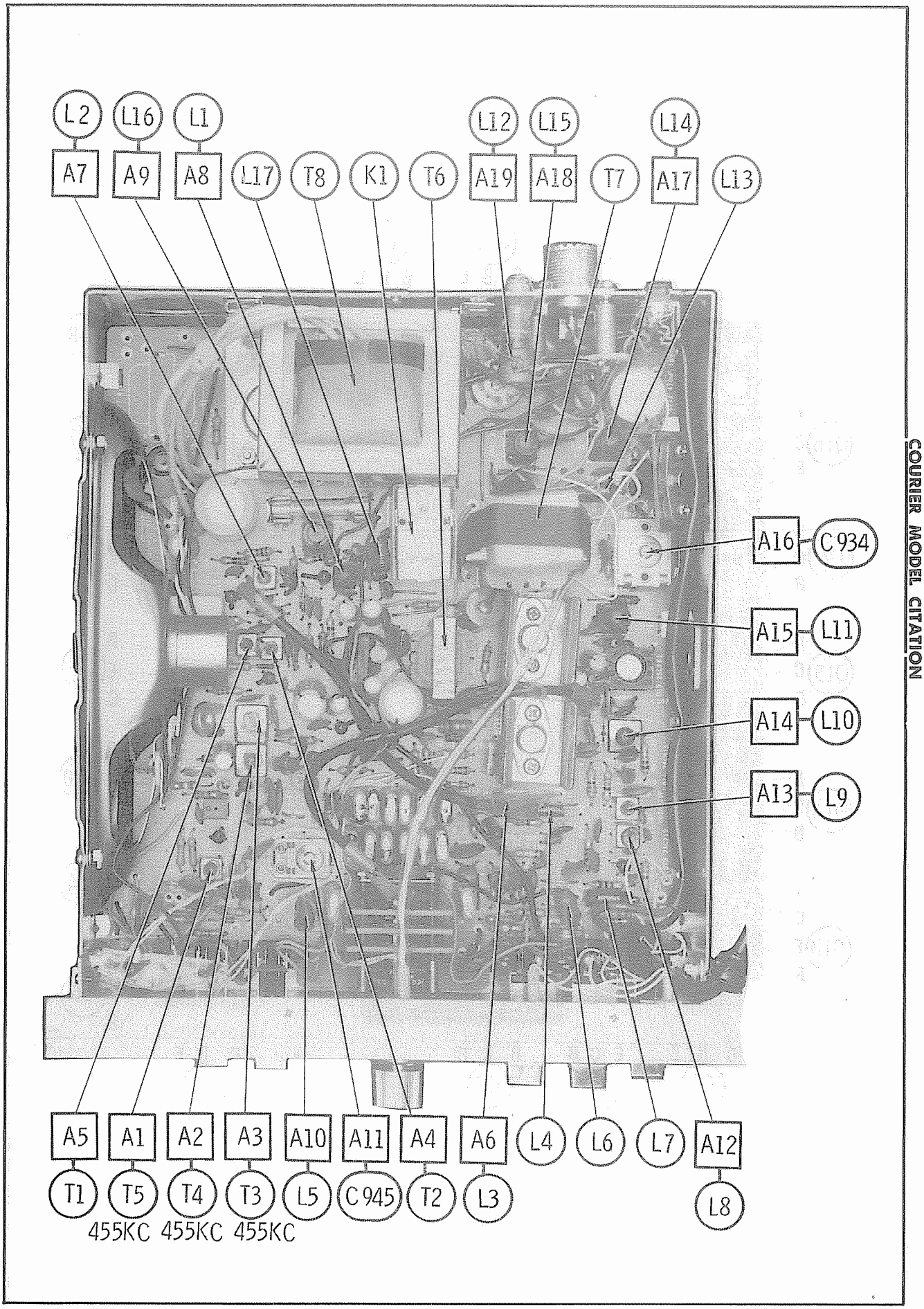
L2
L16
L1
L12
L15
L14
A7
A9
A8
L17
T8
K1
T6
A19
A18
T7
A17
L13
A16
C 934
A15
L11
A14
L10
A13
L9
A5
A1
A2
A3
A10
A11
A4
A6
L4
L6
L7
A12
T1
T5
T4
T3
L5
C 945
T2
L3
L8
455KC
455KC
455KC

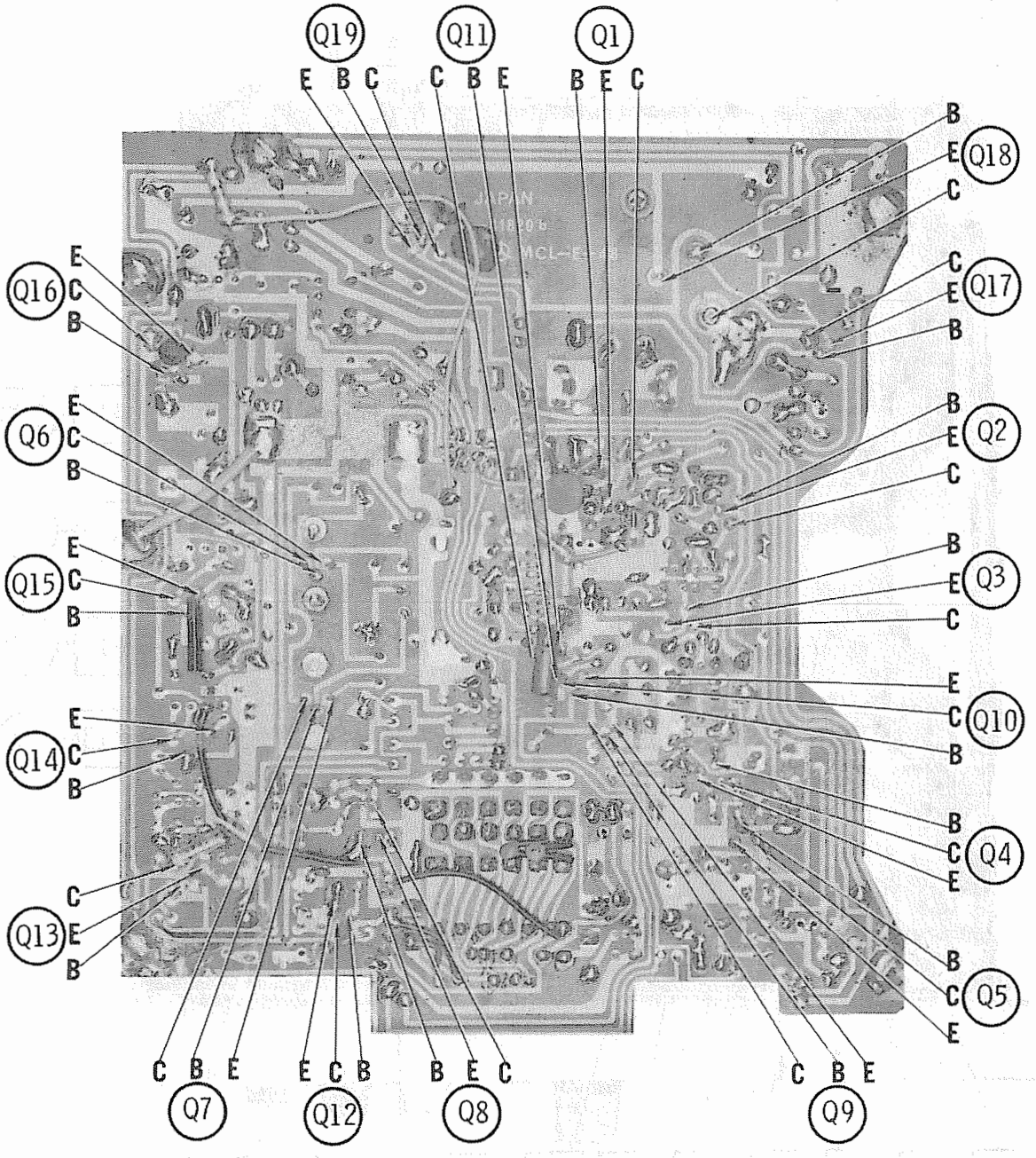
Q19
E B C
Q11
C B E
Q1
B E C
Q18
B E C
Q17
C E B
Q16
E C B
Q6
E C B
Q2
B E C
Q15
E C B
Q3
B E C
Q10
E C B
Q14
E C B
Q4
B C E
Q13
C E B
Q5
B C E
Q7
C B E
Q12
E C B
Q8
B E C
Q9
C B E

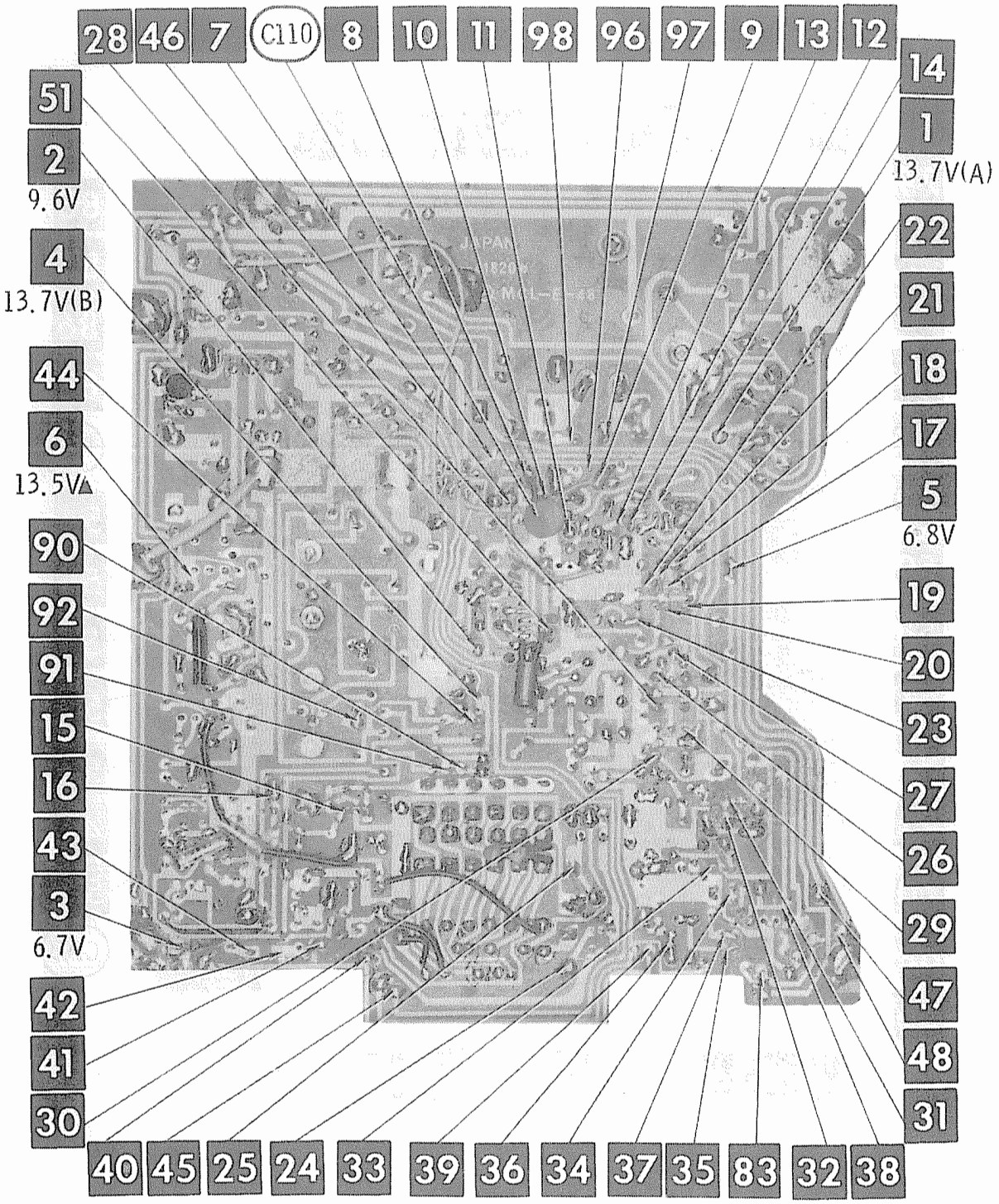

A Howard W. Sams CIRCUITRACE Photo

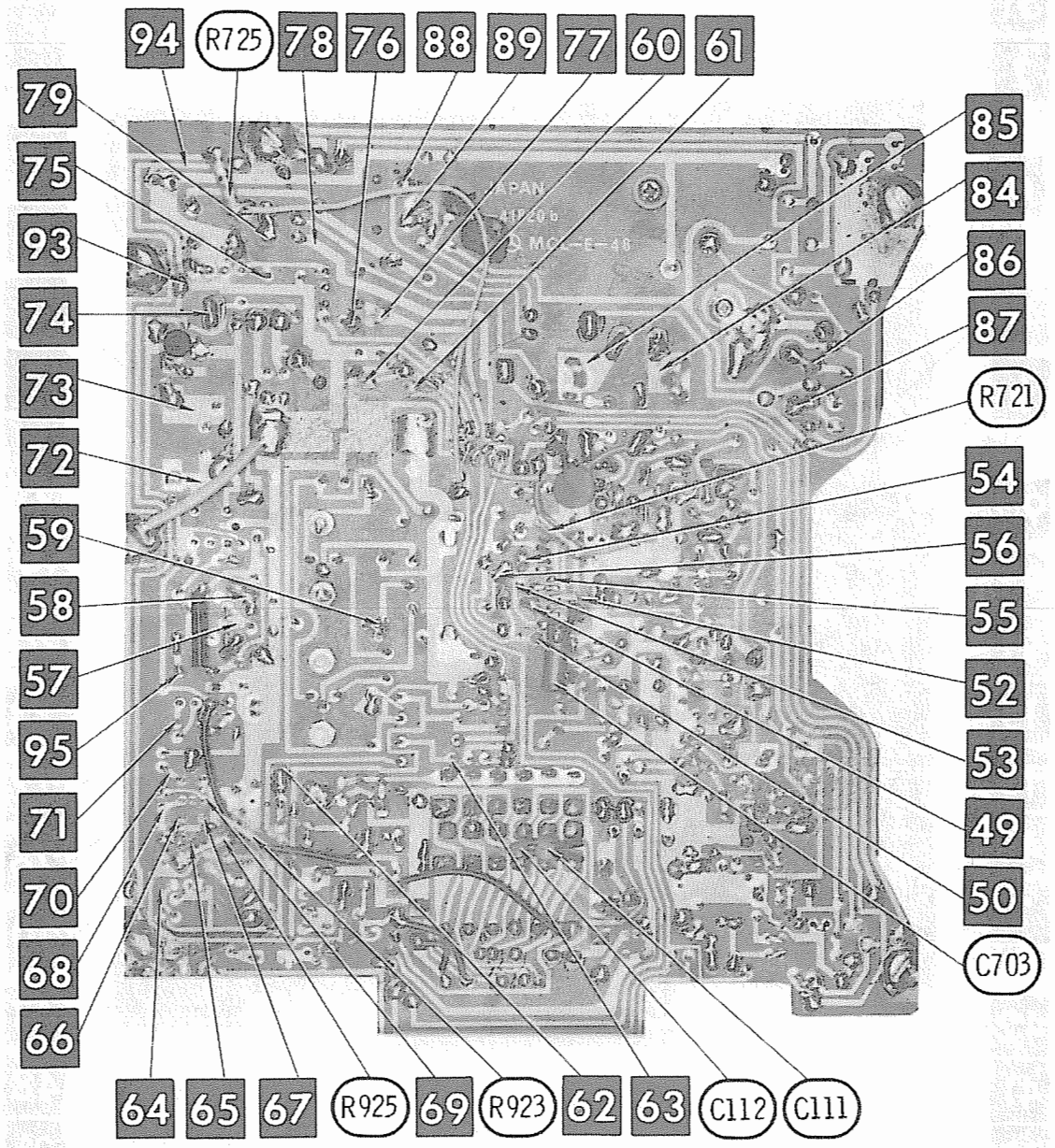

A Howard W. Sams CIRCUITRACE Photo

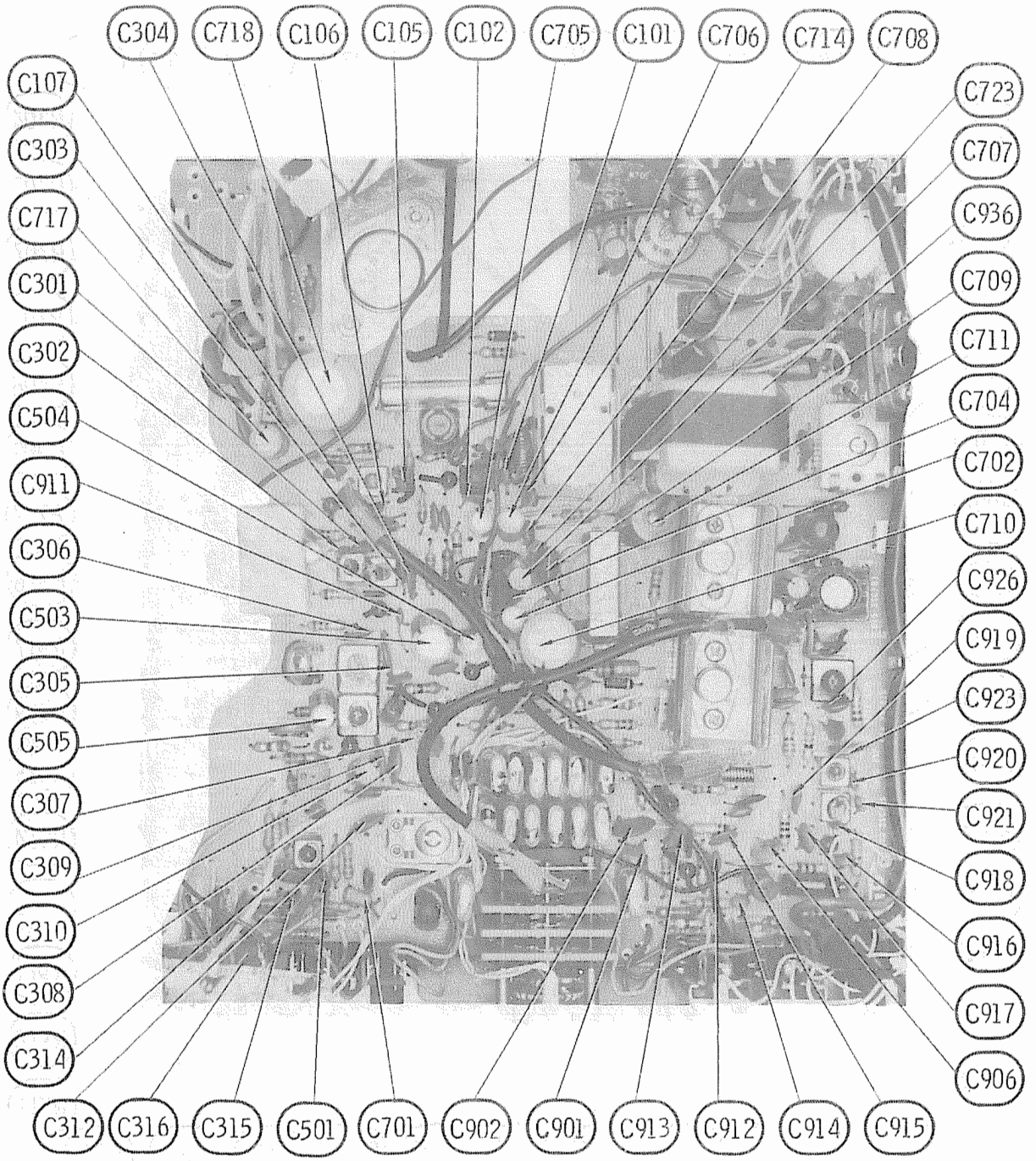
C304
C718
C106
C105
C102
C705
C101
C706
C714
C708
C107
C303
C717
C301
C302
C504
C911
C306
C503
C305
C505
C307
C309
C310
C308
C314
C312
C316
C315
C501
C701
C902
C901
C913
C912
C914
C915
C906
C917
C916
C918
C921
C920
C923
C919
C926
C710
C702
C704
C711
C709
C936
C707
C723

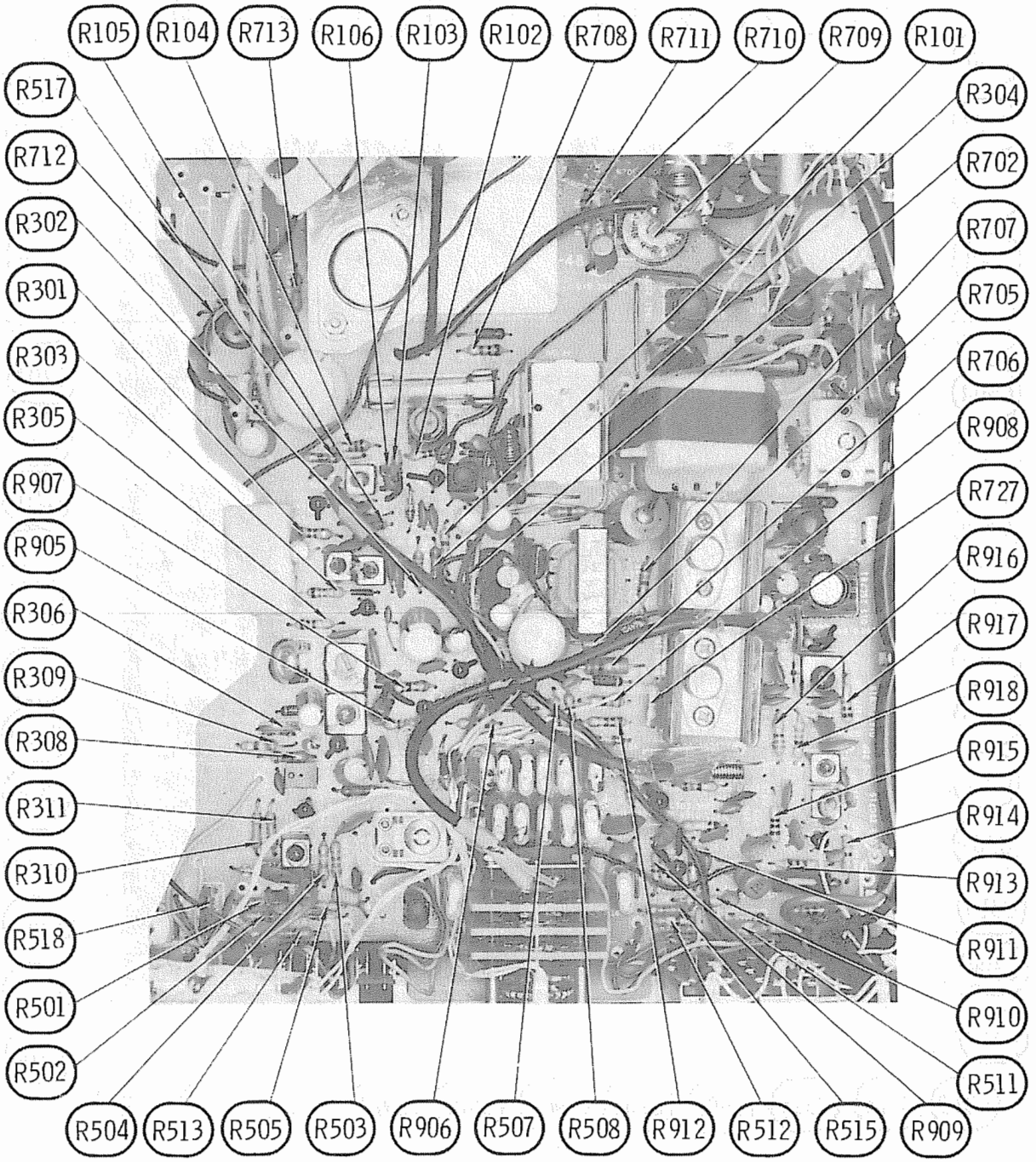
R105
R104
R713
R106
R103
R102
R708
R711
R710
R709
R101
R517
R712
R302
R301
R303
R305
R907
R905
R306
R309
R308
R311
R310
R518
R501
R502
R304
R702
R707
R705
R706
R908
R727
R916
R917
R918
R915
R914
R913
R911
R910
R511
R504
R513
R505
R503
R906
R507
R508
R912
R512
R515
R909

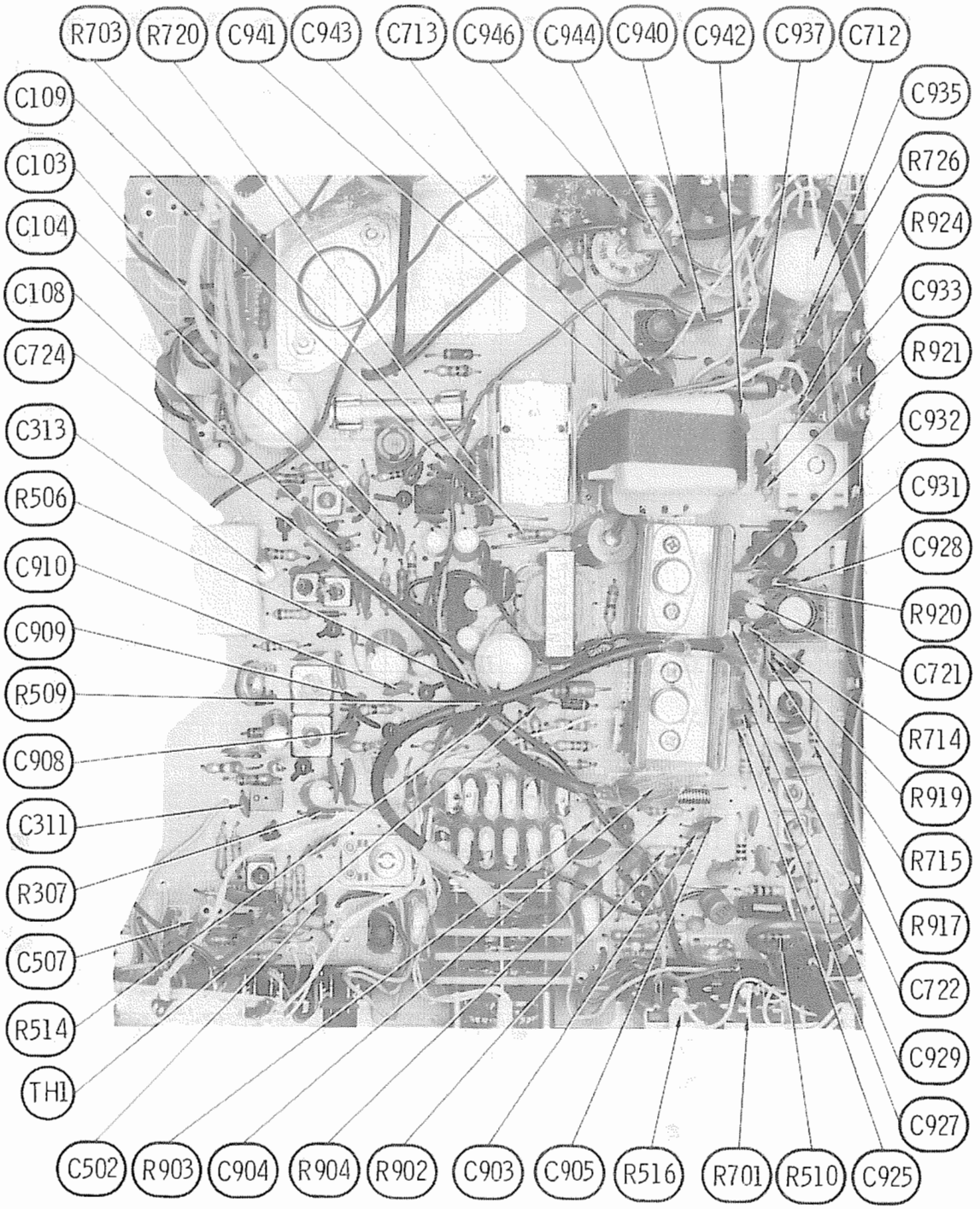
R703
R720
C941
C943
C713
C946
C944
C940
C942
C937
C712
C109
C103
C104
C108
C724
C313
R506
C910
C909
R509
C908
C311
R307
C507
R514
TH1
C502
R903
C904
R904
R902
C903
C905
R516
R701
R510
C925
C927
C929
C722
R917
R715
R919
R714
C721
R920
C928
C931
C932
R921
C933
R924
R726
C935

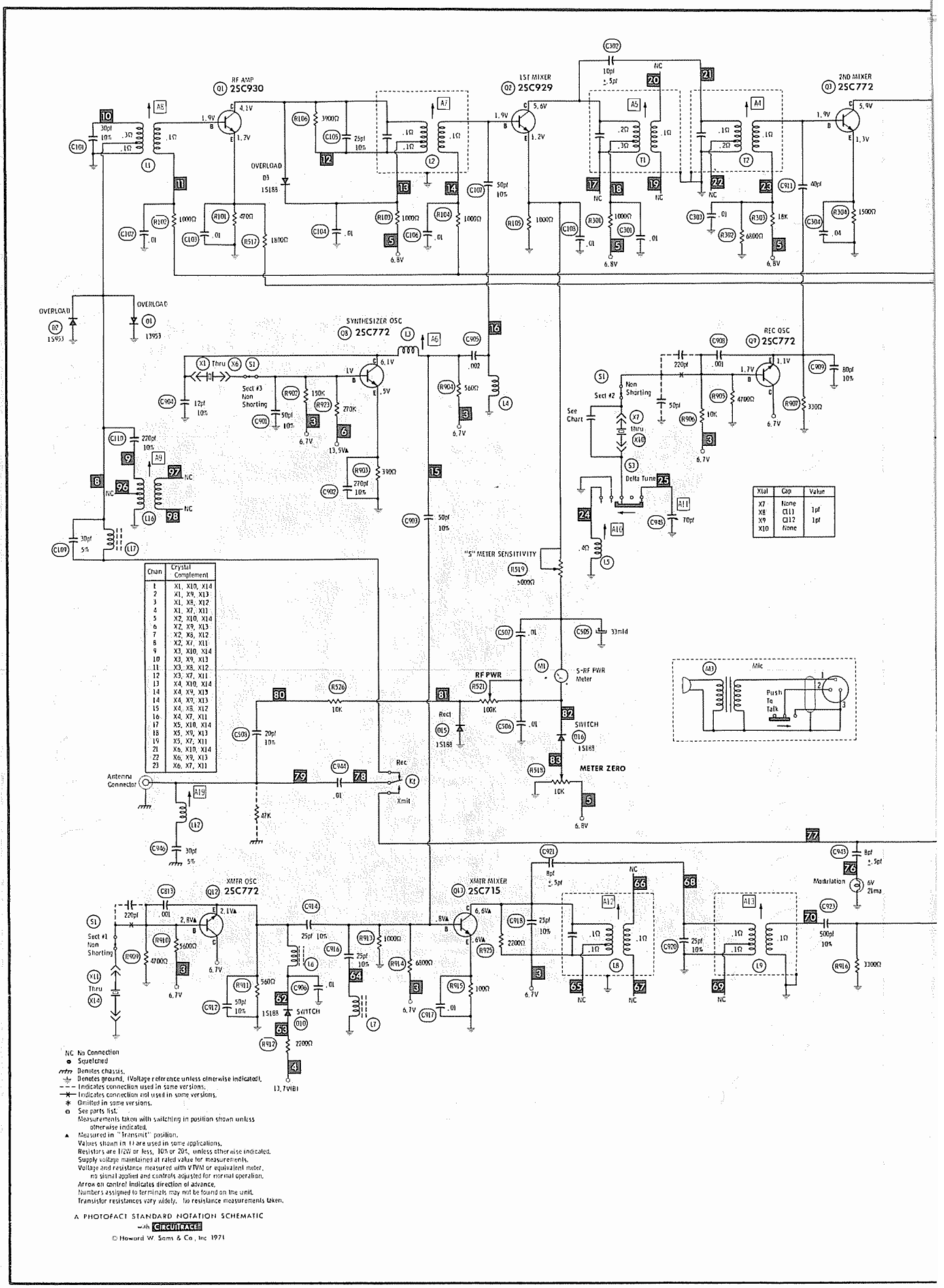

Chan	Crystal Complement
1	X1, X10, X14
2	X1, X9, X13
3	X1, X8, X12
4	X1, X7, X11
5	X2, X10, X14
6	X2, X9, X13
7	X2, X8, X12
8	X2, X7, X11
9	X3, X10, X14
10	X3, X9, X13
11	X3, X8, X12
12	X3, X7, X11
13	X4, X10, X14
14	X4, X9, X13
14	X4, X9, X13
15	X4, X8, X12
16	X4, X7, X11
17	X5, X10, X14
18	X5, X9, X13
19	X5, X7, X11
21	X6, X10, X14
22	X6, X9, X13
23	X6, X7, X11

Xtal	Cap	Value
X7	None	
X8	C11	1pf
X9	C12	1pf
X10	None	

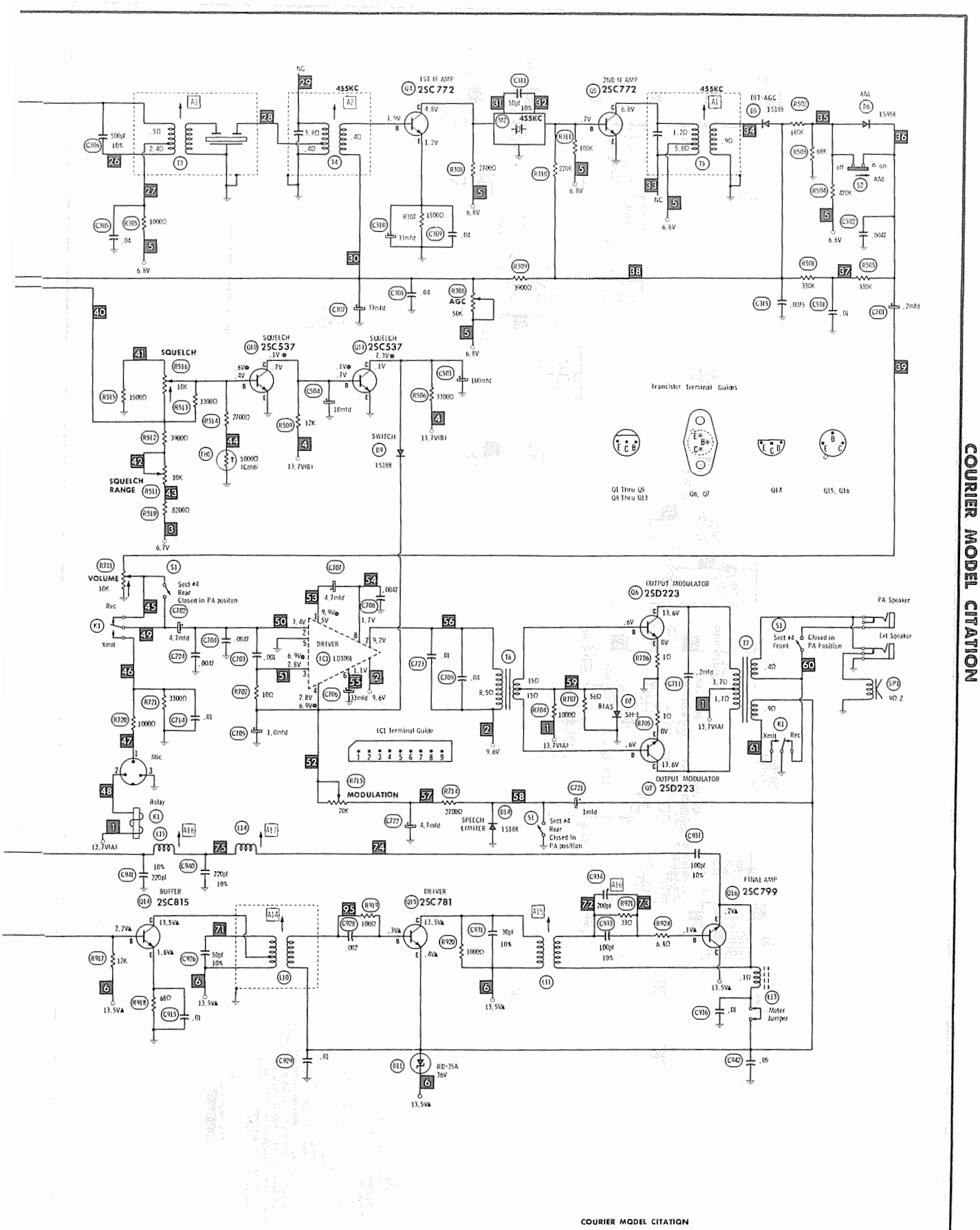

COURIER MODEL CITATION

SEE PAGE 40 FOR POWER SUPPLY

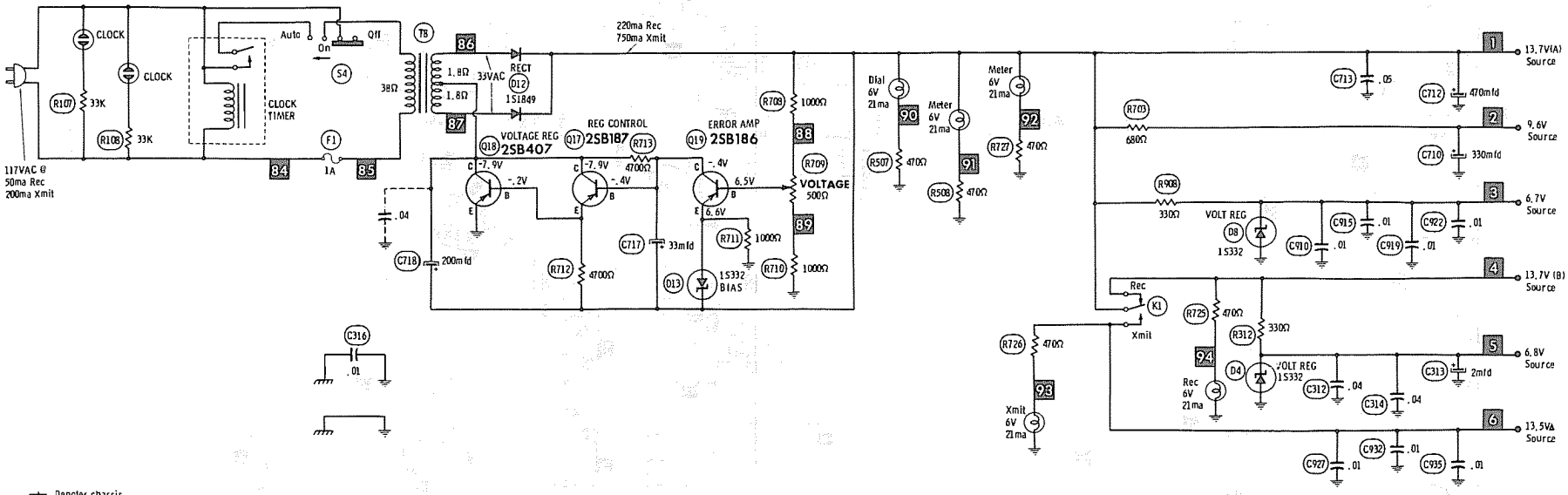

Denotes chassis.
Denotes ground. (Voltage reference unless otherwise indicated).
Indicates connection used in some versions.
Indicates connection not used in some versions.
* Omitted in some versions.
⊖ See parts list.
Measurements taken with switching in position shown unless otherwise indicated.
▲ Measured in "Transmit" position.
Values shown in ( ) are used in some applications.
Resistors are 1/2W or less, 10% or 20%, unless otherwise indicated.
Supply voltage maintained at rated value for measurements.
Voltage and resistance measured with VTVM or equivalent meter, no signal applied and controls adjusted for normal operation.
Arrow on control indicates direction of advance.
Numbers assigned to terminals may not be found on the unit.
Transistor resistances vary widely. No resistance measurements taken.

A PHOTOFACT STANDARD NOTATION SCHEMATIC
with CIRCUITRACE

Transistor Terminal Guides

COURIER MODEL CITATION

A Howard W. Sams CIRCUITRACE Photo

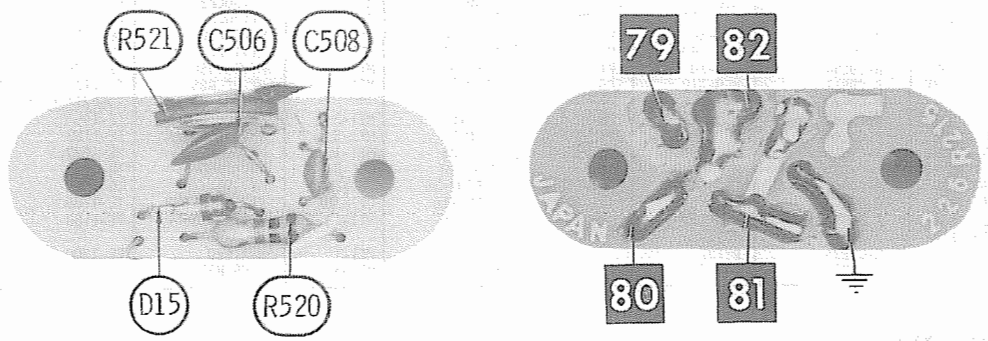

PARTS LIST AND DESCRIPTION

(When ordering parts, state Model, Part Number, and Description.)

TRANSISTORS

ITEM No.	TYPE No.	FUNCTION	REPLACEMENT DATA					
			MFGR. PART No.	GENERAL ELECTRIC PART No.	INTERNATIONAL RECTIFIER PART No.	MOTOROLA PART No.	RCA PART No.	SYLVANIA PART No.
Q1	2SC930EV	RF Amp		GE-11	TR-22	HEP56	SK3019	ECG 108
Q2	2SC929OU	1st Mixer		GE-20	TR-21	HEP50	SK3018	ECG 108
Q3	2SC772CX	2nd Mixer		GE-20	TR-21	HEP50	SK3018	ECG 108
Q4	2SC772CX	1st IF Amp		GE-20	TR-21	HEP50	SK3018	ECG 108
Q5	2SC772CX	2nd IF Amp		GE-20	TR-21	HEP50	SK3018	ECG 108
Q6	2SD223	Output-Modulator				S3001	SK3045	
Q7	2SD223	Output-Modulator				S3001	SK3045	
Q8	2SC772CX	Synthesizer		GE-20	TR-21	HEP50	SK3018	ECG 108
Q9	2SC772CX	Rec. Oscillator		GE-20	TR-21	HEP50	SK3018	ECG 108
Q10	2SC537GI	Squelch		GE-18	TR-21	HEP723	SK3020	ECG 123A
Q11	2SC537GI	Squelch		GE-18	TR-21	HEP723	SK3020	ECG 123A
Q12	2SC772CU	Xmtr. Oscillator		GE-20	TR-21	HEP50	SK3046	ECG 108
Q13	2SC715EV	Xmtr. Mixer		GE-20	TR-24	HEP56	SK3046	ECG 123A
Q14	2SC815	Buffer		GE-20	TR-21	HEP736	SK3047	ECG 108
Q15	2SC781	Driver		GE-18	TR-21	S3001	SK3047	ECG 128
Q16	2SC799	Final Amp					SK3049	
Q17	2SB187	Reg. Control		GE-2	TR-14	HEP632	SK3004	ECG 123A
Q18	2SB407	Voltage Regulator		GE-3	TR-01	HEP230	SK3009	ECG 104
Q19	2SB186	Error Amp		GE-2	TR-14	HEP254	SK3004	ECG 102A

INTEGRATED CIRCUITS

ITEM No.	FUNCTION	MFGR. PART No.	REMARKS
IC1	AF Amp - Driver	LO3001	

POWER RECTIFIERS & SIGNAL DIODES

ITEM No.	MFGR. PART OR TYPE No.	REPLACEMENT DATA				NOTES
		GENERAL ELECTRIC PART No.	INTERNATIONAL RECTIFIER PART No.	RCA PART No.	SYLVANIA PART No.	
D1	1S953	GE-504A	804 or 5A4-0	SK3030 or SK3031	ECG 117	
D2	1S953	GE-504A	804 or 5A4-0	SK3030 or SK3031	ECG 117	
D3	1S188	1N60	1N60	1N60	ECG 109	
D4	1S322 (RD-7A)	GEZD-6.2	1ZM6.2-T10	KO2503	ECG 137	Zener
D5	1S188	1N60	1N60	1N60	ECG 109	
D6	1S953	GE-504A	804 or 5A4-0	SK3030 or SK3031	ECG 117	
D7	SH-1					
D8	1S322 (RD-7A)	GEZD-6.2	1ZM6.2-T10	KO2503	ECG 137	Zener
D9	1S188	1N60	1N60	1N60	ECG 109	
D10	1S188	1N60	1N60	1N60	ECG 109	
D11	RD-35A					
D12	1S1849	GE-504A	804	SK3030 or SK3031	ECG 116 or ECG 117	
D13	1S332 (RD-7A)		Z1122		ECG 147	Zener
D14	1S188	1N60	1N60	1N60	ECG 109	
D15	1S188	1N60	1N60	1N60	ECG 109	
D16	1S188	1N60	1N60	1N60	ECG 109	

PARTS LIST AND DESCRIPTION (CONTINUED)

(When ordering parts, state Model, Part Number, and Description.)

ELECTROLYTIC CAPACITORS

ITEM No.	RATING		REPLACEMENT DATA.						
			PART No.	AEROVOX PART No.	CENTRALAB PART No.	CORNELL-DUBILIER PART No.	GENERAL ELECTRIC PART No.	MALLORY PART No.	SPRAGUE PART No.
C307	33	6.3V	R-C9811	MCD-110	EP6-25	PC30-35	MT1-13	MTV30CB25	TE-1132.1
C310	33	6.3V	R-C9811	MCD-110	EP6-25	PC30-35	MT1-13	MTV30CB25	TE-1132.1
C313	2	10V	R-C9174	MCD-30	EP15-2	PC2-100	MT1-1	MTV2CB50	TE-1121
C503	100	10V	R-C9200	MCD-180	EP15-100	PC100-16	MT1-19	MTV100CD10	TE-1135
C504	10	10V	R-C9244	MCD-70	EP15-10	PC10-50	MT1-5	MTV10CB50	TE-1128
C505	33	6.3V	R-C9811	MCD-110	EP6-25	PC30-35	MT1-13	MTV30CB25	TE-1132.1
C701	.2	10V	R-C9120					TAS224K010P0A	196D224X00350B
C702	4.7	6.3V	R-C9882	MCD-50	EP6-5	PC5-100	MT1-3	MTV5CB50	TL-1084
C705	10	10V	R-C9244	MCO-70	EP15-10	PC10-50	MT1-5	MTV10CB50	TE-1128
C706	33	6.3V	R-C9811	MCO-110	EP6-25	PC30-35	MT1-13	MTV30CB25	TE-1132.1
C707	4.7	6.3V	R-C9882	MCO-50	EP6-5	PC5-100	MT1-3	MTV5CB50	TL-1084
C710	330	16V	R-C9861	PRS1540	EA30-250	WBR300-35	QT1-30A	TC499A	TL-1188
C712	470	16V	R-C9874	BCD15500	EA15-500	PC500-16	QT1-30A	MTV500DN15	TL-1166
C717	33	16V	R-C9584	MCD-110	EP15-25	PC30-35	MT1-13.5	MTV30CB25	TE-1158
C718	2200	20V	R-C9827	PRS1293					
C721	1	50V	R-C9235	PTT87		WBR1-50	MT1-1	MTA1D50	TE-1300
C722	4.7	6.3V	R-C9882	MCD-50	EP6-5	PC5-100	MT1-3	MTV5CB50	TL-1084

CAPACITORS

ITEM No.	RATING		REMARKS	REPLACEMENT DATA					
				AEROVOX PART No.	CENTRALAB PART No.	CORNELL-DUBILIER PART No.	ELMENCO PART No.	MALLORY PART No.	SPRAGUE PART No.
C101	30	10%			TCZ-30		CCTO-300		10TCC-Q30
C102	.01			TTP-01	CK-103	MGP01	CCD-103	TA110	TG-S10
C103	.01			TTP-01	CK-103	MGP01	CCD-103	TA110	TG-S10
C104	.01			TTP-01	CK-103	MGP01	CCO-103	TA110	TG-S10
C105	25	10%		NPO-DI 25	DTZ-25			CN0425	10TCC-Q25
C106	.01			TTP-01	CK-103	MGP01	CCD-103	TA110	TG-S10
C107	50	10%		NPO-DI 50	DTZ-50	NP050	CCTO-510	CN0450	10TCC-Q50
C108	.01			TTP-01	CK-103	MGP01	CCO-103	TA110	TG-S10
C109	30	5%			TCZ-30				10TCC-Q30
C110	220	10%		GPO X5F221K	OD-221	GP220	CCO-221	GP322	10TS-T22
C111	1			NPO-DI 1.0	TCZ-1			CN0510	10TCC-V10
C112	1			NPO-DI 1.0	TCZ-1			CN0510	10TCC-V10
C301	.01			TTP-01	CK-103	MGP01	CCD-103	TA110	TG-S10
C302	10	±.5			DTZ-10	NP010		CN0410	10TCC-Q10
C303	.01			TTP-01	CK-103	MGP01	CCD-103	TA110	TG-S10
C304	.04				DD-403			GP140	
C305	.04				DD-403			GP140	
C306	500	10%		GPO X5F501K	OD-501	GP50D	CCD-501	GP350	10TS-T50
C308	.04				DD-403			GP140	
C309	.04				DD-403			GP140	
C311	50	10%		NPO-DI 5D	DTZ-50	NP050	CCTO-510	CN045D	10TCC-Q50
C312	.04				DO-403			GP140	
C314	.04				DD-403			GP140	
C315	.0075								
C316	.01			TTP-01	CK-103	MGP01	CCD-103	TA110	TG-S10
C501	.01			TTP-01	CK-103	MGP01	CCD-103	TA110	TG-S10
C502	.0047			TTP-005	CK-502	MGP005	CCD-502	TA250	TG-050
C506	.01			TTP-01	CK-103	MGP01	CCD-103	TA110	TG-S10
C507	.01			TTP-01	CK-103	MGP01	CCD-103	TA110	TG-S10
C508	20	10%		NPO-OI 20	OTZ-20	NP020	CCTO-20D	CN0420	10TCC-Q20
C703	.001			GPO X5F102K	DM-102	GP1000	CCD-102	SM210	2SS-D10
C704	.0047			TTP-005	CK-502	MGP005	CCD-502	TA250	TG-D50
C708	.0047			TTP-005	CK-502	MGP005	CCD-502	TA250	TG-05D
C709	.04				DD-403			GP140	
C711	.22	250V		OBE6P22		DPMS4P22	4DP-5-224	PVC4022	4PS-P22
C713	.05			TTP-05	CK-503	MGP05	CCD-503	TA150	TGL-S50
C714	.01			TTP-01	CK-103	MGP01	CCD-103	TA110	TG-S10
C723	.01			TTP-01	CK-103	MGP01	CCD-103	TA110	TG-S10
C724	.0047			TTP-0D5	CK-502	MGP005	CCO-502	TA250	TG-D50
C901	50	10%		NPO-DI 50	DTZ-50	NP050	CCTO-510	CN0450	10TCC-Q50
C902	270	10%		GPO X5F271K	OO-271	GP27D	CCD-271	GP327	10TS-T27
C903	50	10%		NPO-DI 50	OTZ-50	NP050	CCTO-510	CN0450	10TCC-Q50
C904	12	10%			TCZ-12	NP012	CCTO-120	CN0412	10TCC-Q12
C905	.002			GPD X5F202K	DM-202	GP200D	CCO-202	GP220	2SS-D20
C906	.01			TTP-01	CK-103	MGP01	CCD-103	TA110	TG-S10
C908	.001				CPR-10D0J	CD19F102J500	DM-19-102J	SX210	424ME1001J501
C909	80	10%			DTZ-82	NP082	CCTO-820	CN0482	10TCC-Q82
C910	.01			TTP-01	CK-103	MGP01	CCD-103	TA110	TG-S10
C911	40	10%		NPO-DI39	TCZ-39		CCTO-390	CN0439	10TCC-Q39
C912	50	10%		NPO-DI 50	DTZ-50	NP050	CCTO-510	CN0450	10TCC-Q50
C913	.001				CPR-1000J	C019F102J500	DM-19-102J	SX210	424ME1D01J501
C914	25	10%		NPO-DI 25	DTZ-25			CN0425	10TCC-Q25
C915	.01			TTP-01	CK-103	MGP01	CCD-103	TA110	TG-S10
C916	25	10%		NPO-OI 25	OTZ-25			CN0425	10TCC-Q25
C917	.01			TTP-01	CK-103	MGP01	CCD-103	TA110	TG-S10
C918	25	10%		NPO-DI 25	OTZ-25			CN0425	10TCC-Q25
C919	.01			TTP-D1	CK-103	MGP01	CCD-103	TA110	TG-S10
C920	25	10%		NPO-DI 25	DTZ-25			CND425	10TCC-Q25
C921	8	±.5		NPO-DI 8.2		NP08P2			10TCC-V82
C922	.01			TTP-01	CK-103	MGP01	CCD-103	TA110	TG-S10
C923	500	10%		GPD X5F501K	OD-501	GP500	CCD-501	GP350	10TS-T50
C925	.01			TTP-01	CK-103	MGP01	CCD-103	TA110	TG-S10
C926	50	10%		NPO-DI 50	DTZ-50	NP050	CCTO-510	CN0450	10TCC-Q50
C927	.01			TTP-01	CK-103	MGP01	CCD-103	TA110	TG-S10
C928	.002			GPD X5F202K	DM-202	GP2000	CCD-202	GP220	2SS-D20
C929	.01			TTP-01	CK-103	MGP01	CCD-103	TA110	TG-S10
C931	30	10%			TCZ-30		CCTO-300		10TCC-Q30
C932	.01			TTP-01	CK-103	MGP01	CCO-103	TA110	TG-S10
C933	100	10%		NPO-DI 100	DTZ-100	NP0100	CCTO-101	CN0310	10TCC-T10
C934	200		#R-C0506						
C935	.01			TTP-01	CK-103	MGP01	CCD-103	TA11D	TG-S10
C936	.01			TTP-01	CK-103	MGP01	CCD-103	TA110	TG-S1D

PARTS LIST AND DESCRIPTION (CONTINUED)

(When ordering parts, state Model, Part Number, and Description.)

CAPACITORS(cont)

ITEM No.	RATING	REMARKS	REPLACEMENT DATA					
			AEROVOX PART No.	CENTRALAB PART No.	CORNELL-DUBILIER PART No.	ELMENCO PART No.	MALLORY PART No.	SPRAGUE PART No.
C937	100 10%		NPO-DI 100	DTZ-10D	NPO100	CCTO-101	CN0310	10TCC-T10
C940	220 10%		GPD X5F221K	DD-221	GP220	CCD-221	GP322	10TS-T22
C941	220 10%		GPD X5F221K	DD-221	GP220	CCD-221	GP322	10TS-T22
C942	.05		TTP-05	CK-503	MGP05	CCD-503	TA150	TGL-S50
C943	8 ±.5		NPO-DI 8.2		NPO8P2			10TCC-V82
C944	.01		TTP-01	CK-103	MGP01	CCD-1D3	TA110	TG-S10
C945	70	#R-C0068						
C946	30 5%			TCZ-30				10TCC-Q30

Courier Part Number.

CONTROLS (All wattages 1/2 watt, or less, unless listed)

ITEM No.	FUNCTION	RESIST-ANCE	REPLACEMENT DATA				
			MFGR. PART No.	CENTRALAB PART No.	CLAROSTAT PART No.	CTS—IRC PART No.	MALLORY PART No.
R306	AGC	50K	R-R11010	TSV-50K (1) or T-50K (1)		X201R503B (1)	MTC54L1 (1)
R511	Squelch Range	10K	R-R11013	TSV-10K (1) or T-10K (1)		X201R103B (1)	MTC14L1 (1)
R516	Squelch	10K	R-R2003				
R518	"S" Meter Zero	10K	R-R11023	TSV-10K or T-10K		X201R103B	MTC14L1
R519	"S" Meter Sensitivity	5000	R-R11012	TSV-5K (1) or T-5000 (1)		X201R502B (1)	MTC53L1 (1)
R521	"RF" Power	100K	R-R11011	TSV-100K (1) T-100K (1)		X201R104B (1)	MTC15L1 (1)
R701	Volume	10K	R-R2004				
R709	Voltage Adjust	500	R-R116552	B16-107			
R715	Modulation	20K	R-11016	T-20K (1) or TSV-25K (1)		X201R253B (1)	MTC24L1 (1)

(1) Cut off one of the end terminals and bend to fit "PC" board.

RESISTORS (Power and Special)

ITEM No.	RATING	REPLACEMENT DATA	
		WORKMAN PART No.	MFGR. PART No.
R702	10 1/4W 5%		R-R100J
R705	1 1/2W 5%		R-R010J

ITEM No.	RATING	REPLACEMENT DATA	
		WORKMAN PART No.	MFGR. PART No.
R706	1 1/2W 5%		R-R010J
TH1	5000 (Cold)		SDT-500

COILS (RF-IF)

ITEM No.	USE	REPLACEMENT DATA			
		PART No.	MEISSNER PART No.	MILLER PART No.	WORKMAN PART No.
L1	Receiver Antenna	R-W2376-1			
L2	Receiver RF	R-W2403-1			
L3	Xmtr. Oscillator	R-W8311-4			
L4	RF Choke	R-W1080			
L5	Rec. Oscillator	R-W8312-4			
L6	RF Choke (120uh)	R-W1070	19-3125	72F124AP	T307
L7	RF Choke (1.8uh)	R-W1081-4	19-1001	74F186AP	T811
L8	Xmtr. Mixer Input	R-W4055-1			
L9	Buffer Input	R-W4055-1			
L10	Buffer Output	R-W4063-4			
L11	Driver	R-W4056			
L12	TVI Trap	R-W4070-3			
L13	RF Choke (12.3uh)	R-W1569-3		72F125AP	
L14	Final	R-W9078-1			
L15	PI Network	R-W9079-1			
L16	Wave Trap				
L17	Wave Trap	4-253R13230		45B8	
T1	Input IF	R-W5T349			
T2	Interstage IF	R-W5T308			
T3	Interstage IF	R-W5T366 (1)			
T4	Interstage IF	R-W5T367	16-9027	8517	
T5	Output IF	R-W5T352-1	16-9028	8812	

(1) Includes Mechanical Filter

FILTER CHOKE

ITEM No.	RATINGS			REPLACEMENT DATA				NOTES
	CURRENT (Measured)	DC RES.	INDUCTANCE (0 CURRENT 1000~)	MFGR. PART No.	STANCOR PART No.	THORDARSON PART No.	TRIAD PART No.	
T9	.55A DC	.3	4.5mh	R-W6384				

TRANSFORMER (Power)

ITEM No.	RATING		REPLACEMENT DATA				NOTES
	PRI.	SEC. 1	MFGR. PART No.	STANCOR PART No.	THORDARSON PART No.	TRIAD PART No.	
T8	117VAC @ .20A	33VAC, CT @ .75A	R-W7153				

PARTS LIST AND DESCRIPTION (CONTINUED)

(When ordering parts, state Model, Part Number, and Description.)

TRANSFORMER (Driver)

ITEM No.	TURNS RATIO			REPLACEMENT DATA				NOTES
	PRI.	SEC. 1	SEC. 2	MFGR. PART No.	STANCOR PART No.	THORDARSON PART No.	TRIAD Part No.	
T6	2	1 CT		R-W6375				

TRANSFORMER (Audio Output)

ITEM No.	IMPEDANCE		REPLACEMENT DATA				NOTES
	PRI.	SEC. 1	MFGR. PART No.	STANCOR PART No.	THORDARSON PART No.	TRIAD PART No.	
T7	128 CT	8 SEC. 2 .9 DC Resistance	4-254R532				

SPEAKER

ITEM No.	TYPE	REPLACEMENT DATA		NOTES
		MFGR. PART No.	QUAM PART No.	
SP1	2" x 6" PM 8 ohms	R-S6496	26A07Z8	

FUSE DEVICES

ITEM No.	DESCRIPTION	REPLACEMENT DATA						
		PART No.		BUSS PART No.		LITTELFUSE PART No.		WORKMAN PART No.
		DEVICE	HOLDER	DEVICE	HOLDER	DEVICE	HOLDER	DEVICE
F1	.7A 125V	R-S1041a	R-S1038	AGC 3/4	5682-02	312.750	121001	

MISCELLANEOUS

ITEM No.	PART NAME	PART No.	NOTES
K1	Relay	R-S4485	
M1	Meter	4-511R104-A	
M2	Ceramic Filter	R-S1398	
S1	Switch, Selector	R-S4473	
S2	Switch, ANL	R-S4471	
S3	Switch, Delta Tune	R-S4472	
S4	Switch, Power	4-231R134	
X1	Crystal	R-H05401	37.600MC
X2	Crystal	R-H05402	37.650MC
X3	Crystal	R-H05403	37.700MC
X4	Crystal	R-H05404	37.750MC
X5	Crystal	R-H05405	37.800MC
X6	Crystal	R-H05406	37.850MC
X7	Crystal	R-H05407	10.140MC
X8	Crystal	R-H05408	10.160MC
X9	Crystal	R-H05409	10.170MC
X10	Crystal	R-H05410	10.180MC
X11	Crystal	R-H05411	10.595MC
X12	Crystal	R-H05412	10.615MC
X13	Crystal	R-H05413	10.625MC
X14	Crystal	R-H05414	10.635MC
	Clock Assembly	4-952R108	

MICROPHONE

ITEM No.	REPLACEMENT DATA			REMARKS
	MFGR. PART No.	RCA REPLACEMENT	RCA STEP UP REPLACEMENT	
M3	R-S6493a	HK-107	HK-101, HK113	

CABINETS & CABINET PARTS (When ordering specify model, chassis & color)

ITEM	PART No.
Cabinet, Top	123-0-111R116

ITEM	PART No.
Cabinet, Bottom	123-2-126R207

WIRING DATA

General-use Hook-up Wire ..... Use BELDEN No. 8530 (Solid) Available in 12 Colors
8524 (Stranded) Available in 12 Colors
Shielded Antenna Lead ..... Use BELDEN No. 8214 Lowest-loss (RG-8/U Type)
8237 Low-loss (RG-8/U)
8240 (Solid) Miniature (RG-58/U)
8259 (Stranded) Miniature (RG-58A/U)
Coiled Microphone Cable ..... Use BELDEN No. 8497 3-Conductor,1 Shielded,for Press-to-Talk (Neoprene)
8496 3-Conductor,1 Shielded,for Press-to-Talk (Vinyl)
Ignition Noise Suppression ..... Use BELDEN No. 7300-Series Spark-Plug Sets
Bonding Strap ..... Use BELDEN No. 8661 (3/8 In.)

NOTE

ONLY THOSE PERSONS PROPERLY LICENSED ARE PERMITTED TO MAKE REPAIRS OR ADJUSTMENTS WHICH MAY RESULT IN ILLEGAL OPERATION. (REFER TO FCC RULES AND REGULATIONS PART 95, SUBPARTS C & D.)

The frequency of the transmitter should be checked periodically with a secondary frequency standard to insure proper and legal operation.

Best results will be obtained when adjusting the final RF output circuit if the antenna normally used is connected and the chassis is as nearly in the cabinet as possible.

Connect either 50-ohm dummy load or the normally used antenna system.

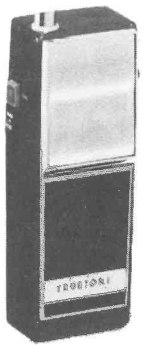

MODEL MIC4812B-17 (DC4812B)

ALIGNMENT INSTRUCTIONS

Suggested Alignment Tools:
A1, A2, A3, A5.....GENERAL CEMENT #8868, 9089
A4, A6 Thru A9.....GENERAL CEMENT #8606L, 9440

RECEIVER

Connect an AC VTVM across speaker voice coil, set volume control fully clockwise and squelch control fully counterclockwise.

SIGNAL GENERATOR	CHANNEL	ADJUST	REMARKS
High side thru .01mfd to base of Q3 (Mixer), low side to chassis. Tune to 455KC (Mod).	Any	A1, A2, A3	Adjust for maximum.
High side thru .01mfd to Antenna, low side to chassis. Tune to 27.085MC (Mod).	11	A4, A5, A6	Adjust for maximum.

TRANSMITTER

INDICATOR	ADJUST	REMARKS
Field Strength meter	A7, A8 A9	Adjust for maximum.

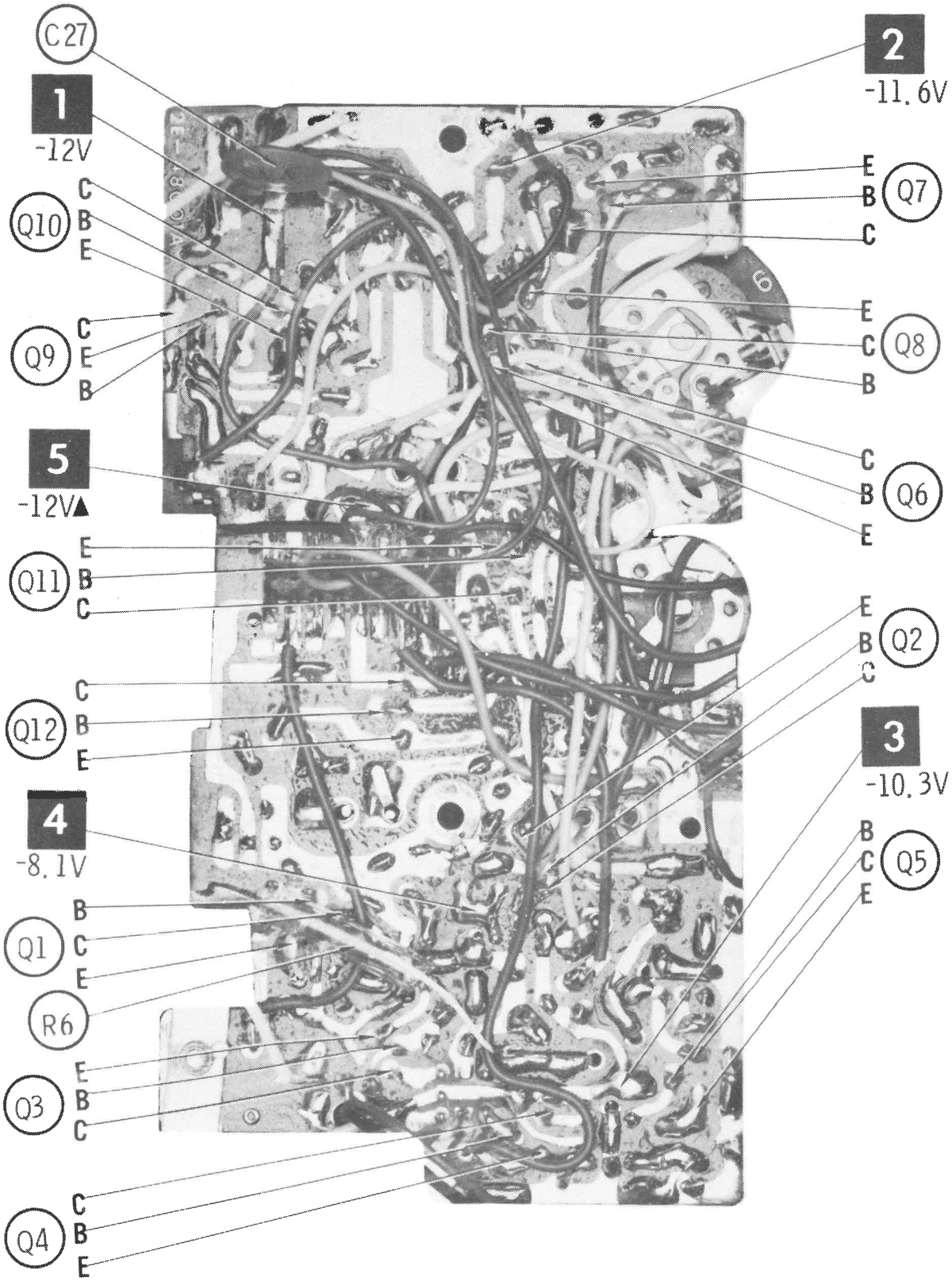

A Howard W. Sams CIRCUITRACE™ Photo

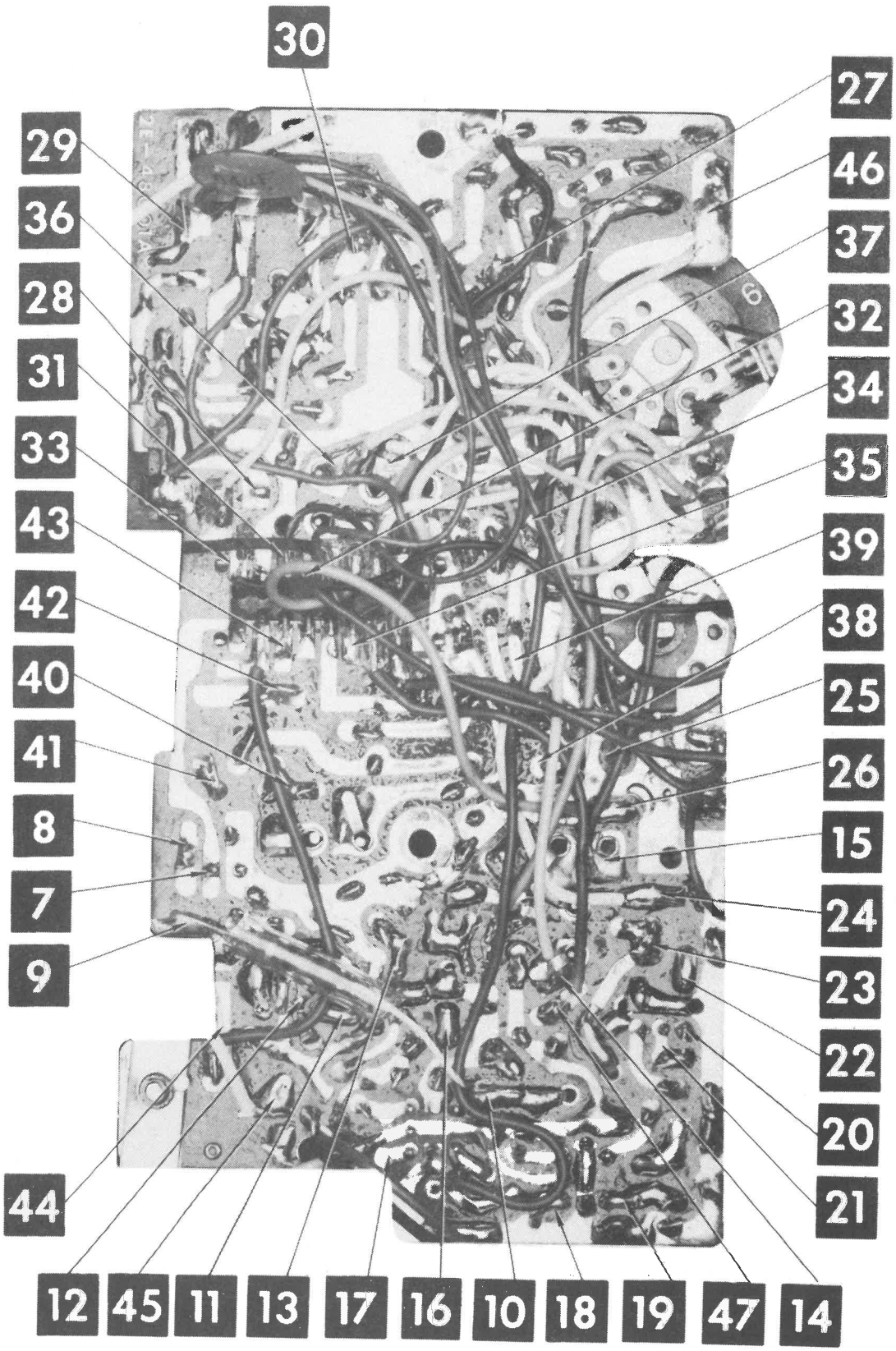

A Howard W. Sams CIRCUITRACE Photo

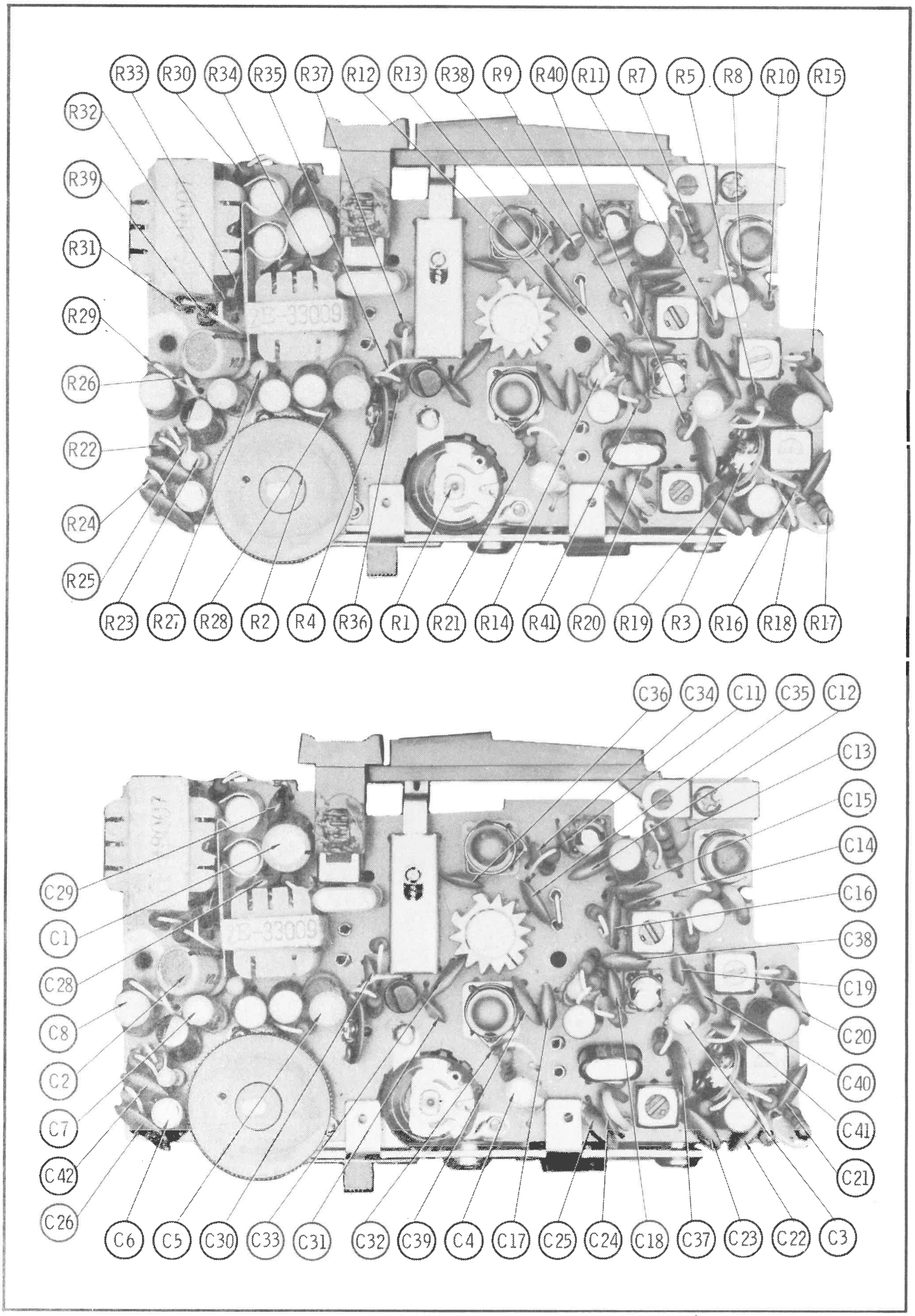
R33
R30
R34
R35
R37
R12
R13
R38
R9
R40
R11
R7
R5
R8
R10
R15
R32
R39
R31
R29
R26
R22
R24
R25
R23
R27
R28
R2
R4
R36
R1
R21
R14
R41
R20
R19
R3
R16
R18
R17
C36
C34
C11
C35
C12
C13
C15
C14
C16
C38
C19
C20
C40
C41
C21
C29
C1
C28
C8
C2
C7
C42
C26
C6
C5
C30
C33
C31
C32
C39
C4
C17
C25
C24
C18
C37
C23
C22
C3

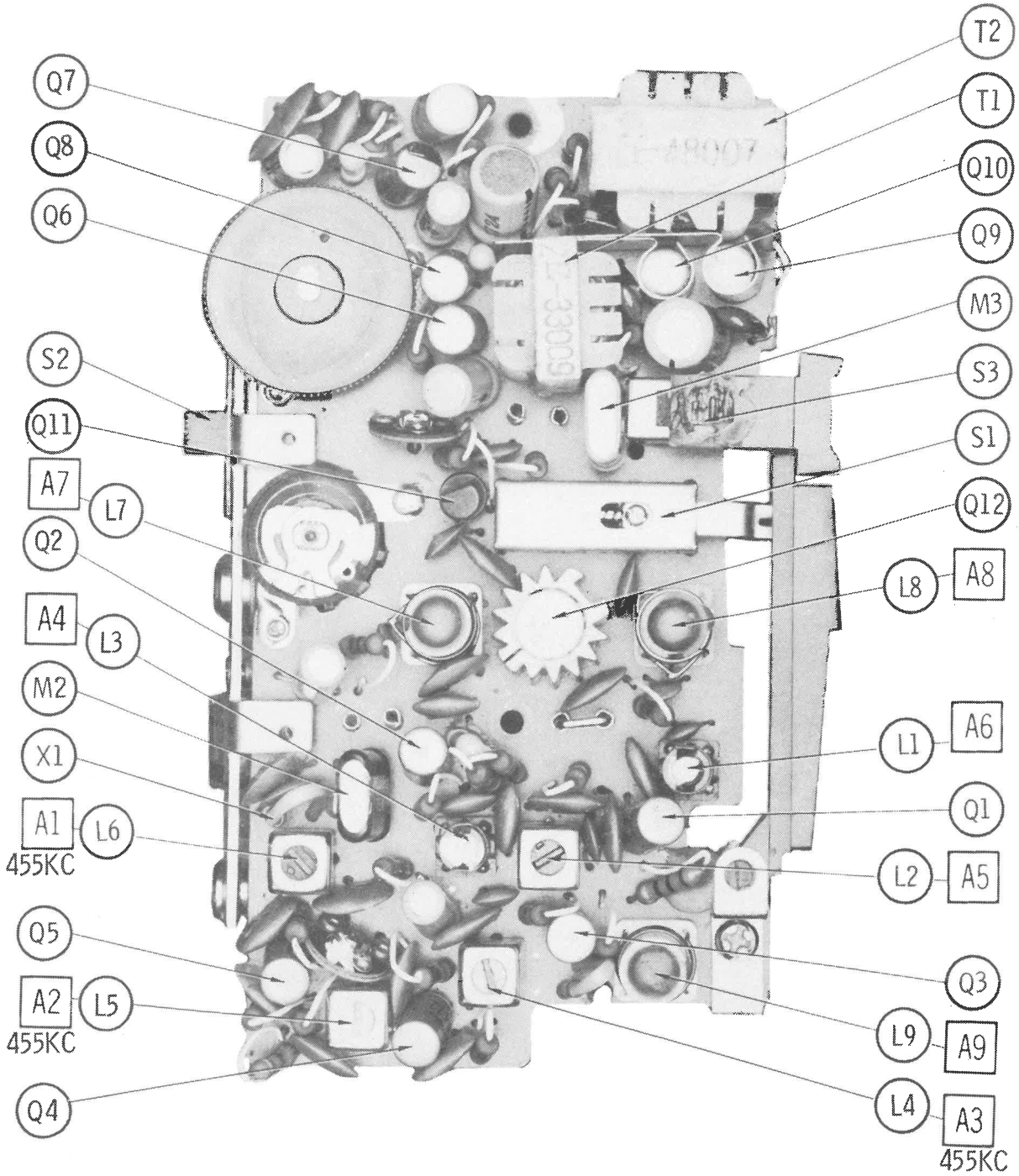
T2
T1
Q10
Q9
M3
S3
S1
Q12
A8
L8
A6
L1
Q1
A5
L2
Q3
A9
L9
A3
455KC
L4
Q7
Q8
Q6
S2
Q11
A7
L7
Q2
A4
L3
M2
X1
A1
455KC
L6
Q5
A2
455KC
L5
Q4

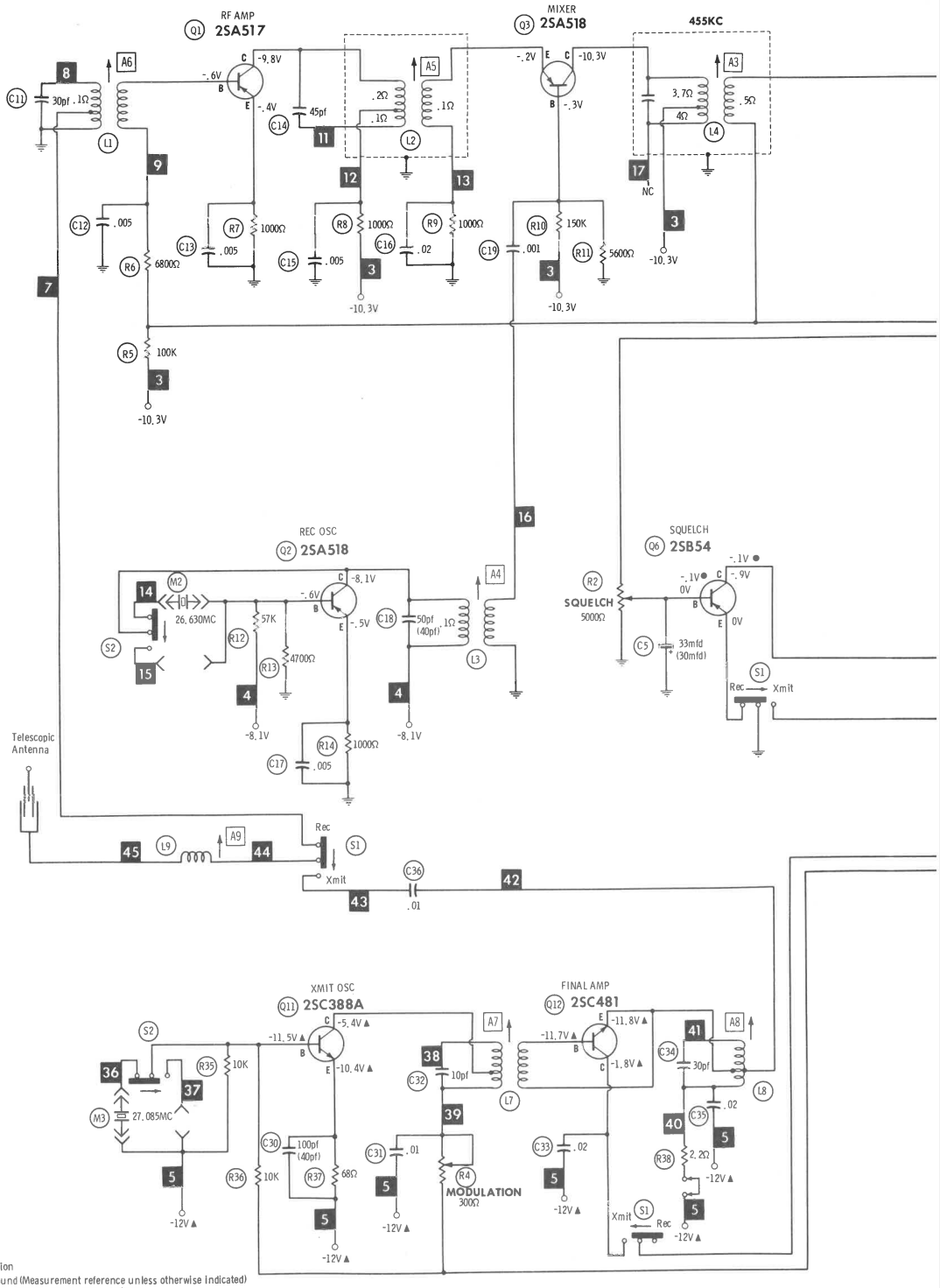

● Squelched
NC No Connection
⏚ Denotes ground (Measurement reference unless otherwise indicated)
– – – Indicates connection used in some versions.
—✕— Indicates connection not used in some versions.
✱ Omitted in some versions.
⊖ See parts list.
Measurements taken with switching in position shown unless otherwise indicated.
▲ Measured in "Transmit" position.
Values shown in ( ) are used in some applications.
Resistors are 1/2W or less, 10% or 20%, unless otherwise indicated.
Supply voltage maintained at rated value for measurements.
Voltage and resistance measured with VTVM or equivalent meter, no signal applied and controls adjusted for normal operation.
Controls viewed from actuator end. Arrow indicates clockwise rotation.
Numbers assigned to terminals may not be found on the unit.
Transistor resistances vary widely. No resistance measurements taken.

A PHOTOFACT STANDARD NOTATION SCHEMATIC
with CIRCUITRACE®

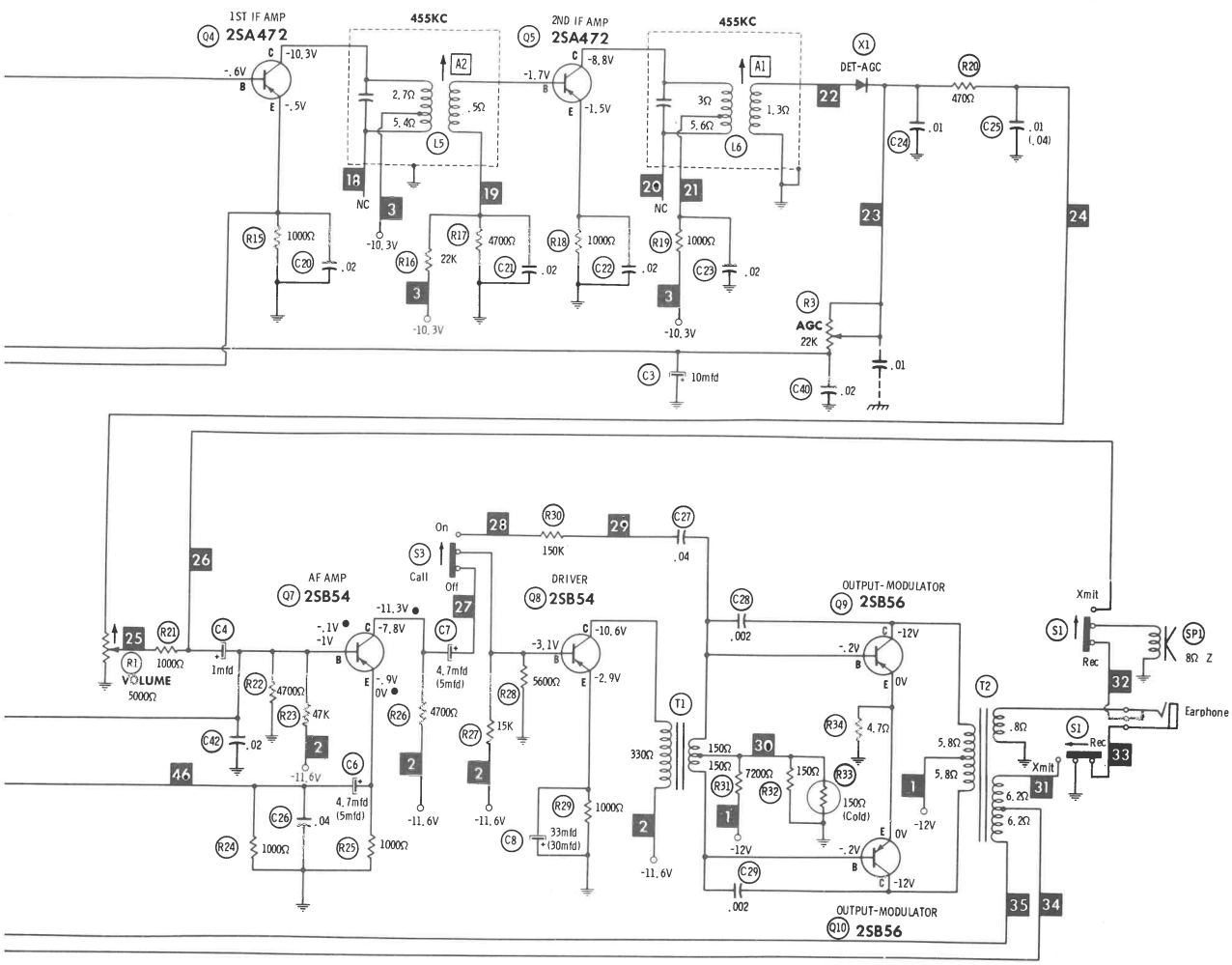

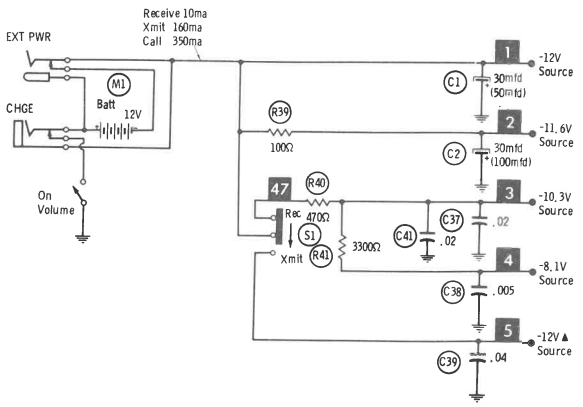

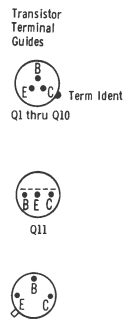

TRUETONE MODEL MIC4812B-17

PARTS LIST AND DESCRIPTION

(When ordering parts, state Model, Part Number, and Description.)

TRANSISTORS

ITEM No.	TYPE No.	FUNCTION	REPLACEMENT DATA					
			MFGR. PART No.	GENERAL ELECTRIC PART No.	INTERNATIONAL RECTIFIER PART No.	MOTOROLA PART No.	RCA PART No.	SYLVANIA PART No.
Q1	2SA517	RF Amp	09-300015	GE-9	TR-17	HEP3	SK3006	ECG 126
Q2	2SA518 (2SA472)	Rec. Oscillator	09-300016 (09-300012)	GE-9	TR-17	HEP3	SK3006	ECG 126
Q3	2SA518	Mixer	09-300016	GE-9	TR-17	HEP3	SK3006	ECG 126
Q4	2SA472	1st IF Amp	09-300012	GE-9	TR-17	HEP3	SK3006	ECG 126
Q5	2SA472	2nd IF Amp	09-300012	GE-9	TR-17	HEP3	SK3006	ECG 126
Q6	2SB54	Squelch	09-301003	GE-2	TR-14	HEP254	SK3004	ECG 102A
Q7	2SB54	AF Amp	09-301003	GE-2	TR-14	HEP254	SK3004	ECG 102A
Q8	2SB54	Driver	09-301003	GE-2	TR-14	HEP254	SK3004	ECG 102A
Q9	2SB56	Output	09-301004	GE-2	TR-14	HEP632	SK3004	ECG 102A
Q10	2SB56	Output	09-301004	GE-2	TR-14	HEP632	SK3004	ECG 102A
Q11	2SC388A	Xmtr. Oscillator	09-302016	GE-17	TR-21	HEP54	SK3018	ECG 108
Q12	2SC481	Final Amp	09-302015	GE-18		HEPS3001	SK3047	ECG 128

POWER RECTIFIERS & SIGNAL DIODES

ITEM No.	MFGR. PART OR TYPE No.	REPLACEMENT DATA				NOTES
		GENERAL ELECTRIC PART No.	INTERNATIONAL RECTIFIER PART No.	RCA PART No.	SYLVANIA PART No.	
X1	1N60	1N60	1N60	1N60	ECG 109	

ELECTROLYTIC CAPACITORS

ITEM No.	RATING		REPLACEMENT DATA						
			PART No.	AEROVOX PART No.	CENTRALAB PART No.	CORNELL-DUBILIER PART No.	GENERAL ELECTRIC PART No.	MALLORY PART No.	SPRAGUE PART No.
C1	30	15V		MCD-110	EP15-25	PC30-35	MT1-13.5	MTV30CB25	TE-1158
	50	15V	77-331506						
C2	30	15V		MCD-110	EP15-25	PC30-35	MT1-13.5	MTV30CB25	TE-1158
	50	15V	77-331506						
	100	15V							
C3	10	6.3V	77-335106	MCD-70	EP6-10	PC10-50	MT1-5	MTV10CB50	TE-1087
C4	1	10V		MCD-10		PC1-100	MT1-1	MTV1CB50	TE-1120
	1	6V	77-335105						
C5	33	6.3V	77-335306	MCD-110	EP6-25	PC30-35	MT1-13	MTV30CB25	TE-1132.1
C6	4.7	6.3V	77-335505	MCD-50	EP6-5	PC5-100	MT1-3	MTV5CB50	TL-1084
C7	4.7	6.3V	77-335505	MCD-50	EP6-5	PC5-100	MT1-3	MTV5CB50	TL-1084
C8	33	6.3V	77-335306	MCD-110	EP6-25	PC30-35	MT1-13	MTV30CB25	TE-1132.1

CAPACITORS

ITEM No.	RATING		REMARKS	REPLACEMENT DATA					
				AEROVOX PART No.	CENTRALAB PART No.	CORNELL-DUBILIER PART No.	ELMENCO PART No.	MALLORY PART No.	SPRAGUE PART No.
C11	300			GPD X5F301K	DM-301	GP300	CCD-301	GP330	10TS-T30
C12	.005			TTP-005	CK-502	MGP005	CCD-502	TA250	TG-D50
C13	.005			TTP-005	CK-502	MGP005	CCD-502	TA250	TG-D50
C14	45			GPD X5F470K	DD-470	NP047	CCD-470	GP447	10TS-Q47
C15	.005			TTP-005	CK-502	MGP005	CCD-502	TA250	TG-D50
C16	.02			TTP-02	CK-203	MGP02	CCD-203	TA120	TG-S20
C17	.005			TTP-005	CK-502	MGP005	CCD-502	TA250	TG-D50
C18	50	10%		NPO-DI 50	DTZ-50	NP050	CCTO-510	CN0450	10TCC-Q50
C19	.001			GPD X5F102K	DM-102	GP1000	CCD-102	SM210	2SS-D10
C20	.02			TTP-02	CK-203	MGP02	CCD-203	TA120	TG-S20
C21	.02			TTP-02	CK-203	MGP02	CCD-203	TA120	TG-S20
C22	.02			TTP-02	CK-203	MGP02	CCD-203	TA120	TG-S20
C23	.02			TTP-02	CK-203	MGP02	CCD-203	TA120	TG-S20
C24	.01			TTP-01	CK-103	MGP01	CCD-103	TA110	TG-S10
C25	.04				DD-403			GP140	
C26	.04				DD-403			GP140	
C27	.04				DD-403			GP140	
C28	.002			DBE6D2	CPR-2000J	DPMS6D2	6DP-1-202	PVC622	6PS-D20
C29	.002			DBE6D2	CPR-2000J	DPMS6D2	6DP-1-202	PVC622	6PS-D20
C30	100			GPD X5F101K	DD-101	GP100	CCD-101	GP310	10TS-T10
C31	.01			TTP-01	CK-103	MGP01	CCD-103	TA110	TG-S10
C32	10			NPO-DI 10	DTZ-10	NP010	CCTO-100	CN0410	10TCC-Q10

PARTS LIST AND DESCRIPTION (CONTINUED)

(When ordering parts, state Model, Part Number, and Description.)

CAPACITORS(cont)

ITEM No.	RATING	REMARKS	REPLACEMENT DATA					
			AEROVOX PART No.	CENTRALAB PART No.	CORNELL-DUBILIER PART No.	ELMENCO PART No.	MALLORY PART No.	SPRAGUE PART No.
C33	.02		TTP-02	CK-203	MGP02	CCD-203	TA120	TG-S20
C34	30							
C35	.02		TTP-02	CK-203	MGP02	CCD-203	TA120	TG-S20
C36	.01		TTP-01	CK-103	MGP01	CCD-103	TA110	TG-S10
C37	.02		TTP-02	CK-203	MGP02	CCD-203	TA120	TG-S20
C38	.005		TTP-005	CK-502	MGP005	CCD-502	TA250	TG-D50
C39	.04			DD-403			GP140	
C40	.02		TTP-02	CK-203	MGP02	CCD-203	TA120	TG-S20
C41	.02		TTP-02	CK-203	MGP02	CCD-203	TA120	TG-S20
C42	.02		TTP-02	CK-203	MGP02	CCD-203	TA120	TG-S20

CONTROLS (All wattages 1/2 watt, or less, unless listed)

ITEM No.	FUNCTION	RESIST-ANCE	REPLACEMENT DATA				
			MFGR. PART No.	CENTRALAB PART No.	CLAROSTAT PART No.	CTS—IRC PART No.	MALLORY PART No.
R1	Volume/Switch	5000	13-160061	B16-214 (1)			
R2	Squelch	5000	13-166022	B16-214 (1) (2)			
R3	AGC Adjust	22K	13-164058				
R4	Modulation Adjust	300	13-164059				

(1) Use original knob,
(2) Disregard Switch.

RESISTORS (Power and Special)

ITEM No.	RATING	REPLACEMENT DATA	
		WORKMAN PART No.	MFGR. PART No.
R23	150 (Cold)		

ITEM No.	RATING	REPLACEMENT DATA	
		WORKMAN PART No.	MFGR. PART No.
R34	4.7 1/4W		

COILS (RF-IF)

ITEM No.	USE	REPLACEMENT DATA			
		PART No.	MEISSNER PART No.	MILLER PART No.	WORKMAN PART No.
L1	Antenna Matching	13-176246			
L2	RF	13-176247			
L3	Receive Oscillator	13-170144			
L4	Input IF	13-090081	16-9033	8810	
L5	Interstage IF	13-090082	16-9034	8811	
L6	Output IF	13-090083	16-9035	8812	
L7	Xmtr. Oscillator	13-176251			
L8	Final	13-176252			
L9	Antenna Tuning	13-176253			

TRANSFORMER (Driver)

ITEM No.	TURNS RATIO			REPLACEMENT DATA				NOTES
	PRI.	SEC. 1	SEC. 2	MFGR. PART No.	STANCOR PART No.	THORDARSON PART No.	TRIAD Part No.	
T1	1.3	1		13-096044				

PARTS LIST AND DESCRIPTION (CONTINUED)

(When ordering parts, state Model, Part Number, and Description.)

TRANSFORMER (Audio Output)

ITEM No.	IMPEDANCE		REPLACEMENT DATA				NOTES
	PRI.	SEC. 1	MFGR. PART No.	STANCOR PART No.	THORDARSON PART No.	TRIAD PART No.	
T2	200	8 Sec 2 12.4 CT DC Resistance	13-096045				

SPEAKER

ITEM No.	TYPE	REPLACEMENT DATA		NOTES
		MFGR. PART No.	QUAM PART No.	
SP1	2-1/4" PM, 8 ohms	13-060058	22A06Z8	

BATTERIES

ITEM No.	VOLTAGE	MFGR. PART No.	REPLACEMENT DATA		NOTES
			EVEREADY	MALLORY	
M1	12V		1015 or E91 or E9	M15R or MN1500 or ZM9	8 Required.

MISCELLANEOUS

ITEM No.	PART NAME	PART No.	NOTES
M2	Crystal, Receive	13-128031	26.630MC
M3	Crystal, Xmit	13-128032	27.085MC
S1	Switch, Xmit-Rec	13-183111	
S2	Switch, Selector	13-183114	
S3	Switch, Call	13-183115	
	Antenna, Telescopic	13-040061	

CABINETS & CABINET PARTS (When ordering specify model, chassis & color)

ITEM	PART No.
Cabinet, Front	13-010122
Cabinet, Rear	13-013078
Knob, Xmit-Receiver	13-118068

ITEM	PART No.
Knob, Call	13-118069
Knob, Volume, Squelch	13-110068

WIRING DATA

General-use Hook-up Wire ..... Use BELDEN No. 8530 (Solid) Available in 12 Colors
8524 (Stranded) Available in 12 Colors

Shielded Antenna Lead ..... Use BELDEN No. 8214 Lowest-loss (RG-8/U Type)
8237 Low-loss (RG-8/U)
8240 (Solid) Miniature (RG-58/U)
8259 (Stranded) Miniature (RG-58A/U)

Coiled Microphone Cable ..... Use BELDEN No. 8499 Single-Conductor Shielded (Neoprene)
8498 Single-Conductor Shielded (Vinyl)

Ignition Noise Suppression ..... Use BELDEN No. 7300-Series Spark-Plug Sets

Bonding Strap ..... Use BELDEN No. 8661 (3/8 In.)

For Supplier Address See PHOTOFACT Index

NOTE

ONLY THOSE PERSONS PROPERLY LICENSED ARE PERMITTED TO MAKE REPAIRS OR ADJUSTMENTS WHICH MAY RESULT IN ILLEGAL OPERATION. (REFER TO FCC RULES AND REGULATIONS PART 95, SUBPARTS C & D.)

The frequency of the transmitter should be checked periodically with a secondary frequency standard to insure proper and legal operation.

Best results will be obtained when adjusting the final RF output circuit if the antenna normally used is connected and the chassis is as nearly in the cabinet as possible.

Connect either 50-ohm dummy load or the normally used antenna system.

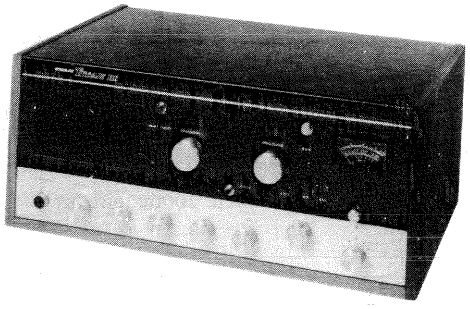

MODEL TITAN III

ALIGNMENT INSTRUCTIONS

Suggested Alignment Tools: GENERAL CEMENT

A1 thru A6, A11, A12, A18, A19, A20, A22 .....#9296, 9297, 9300
A7, A8, A9, A14 thru A17, A24, A25, A26 .....#8276, 8277, 8290
A10, A13, A21, A23, A27 .....#8606L, 9440

RECEIVER ALIGNMENT

Connect an AC VTVM across speaker voice coil. Set Volume and RF gain controls fully clockwise and Squelch control fully counterclockwise. Turn the Noise Limiter off. Set mode switch to AM and center the Fine Tune control.

SIGNAL GENERATOR	CHANNEL	ADJUST	REMARKS
High side thru .01mfd to gate of Q6 (2nd Mixer), low side to chassis. Tune to 455KC (Mod.)	Any	A3, A4, A5	Adjust for maximum.
High side thru .01mfd to gate of Q6 (2nd Mixer), low side to chassis. Tune to 455KC (No Mod.)	Any	A1, A2	Connect a VTVM to point Ⓐ. Adjust generator output for approximately -.3 volts at point Ⓐ. Adjust A1 and A2 for maximum, reducing generator output as necessary.
	2	A8	Set Channel and Rec. Tune dials to channel 2. Push the Spot button and adjust A8 for maximum "S" meter reading.
	22		Set channel dial to channel 22 and push the Spot switch. Set the Rec. Tune dial to channel 22. Bend one of the Osc. plates to put the hair-line on the channel 22 mark. Recheck the channel 2 calibration.
	11	A9 thru A13	Detune A11 (Top) counterclockwise. Adjust A12 (Bottom) and A13 for maximum receiver noise output. Set Rec. Tune dial to 22 and adjust A10 for peak receiver noise. Set Rec. Tune dial to 2 and adjust A11 (Top) and A9 for maximum noise.

HOWARD W. SAMS & CO., INC. Indianapolis, Indiana 46206

ALIGNMENT INSTRUCTIONS (Continued)

BFO ALIGNMENT

SIGNAL GENERATOR	CHANNEL	ADJUST	REMARKS
	Any	A6, A7	Couple a frequency meter to the BFO. Turn mode switch to LSB and adjust A6 for 459KC. Switch to USB and adjust A7 for 451KC.

"S" METER CALIBRATION
Set RF Gain control fully clockwise.

INDICATOR	ADJUST	REMARKS	
High side thru .01mfd to Antenna Connector, low side to chassis. Tune to 27.085MC with 200uv output (No Mod.)	11	R6, R7	Zero the "S" meter using R6 with no signal. Apply signal and adjust R7 for a meter reading of 20db. Drop the signal strength 20db. The meter reading should be approximately S9.

TRANSMITTER ALIGNMENT (AM)

INDICATOR	ADJUST	REMARKS
RF wattmeter or Field Strength meter	A18 thru A24, A27	Adjust A27 for maximum source voltage at Q27 (Xmtr. Mixer). Set channel selector to channel 11. Detune A18 (top) and peak A19 (Bottom). Peak A18 (Top). Detune A21 counterclockwise and peak A20. Adjust A21 for peak. Adjust A22 for MINIMUM emitter voltage on Q30 (Driver). Adjust A23 and A24 for maximum output and efficiency. Output should be between 3.5 watts and 3.75 watts.

SSB TRANSMITTER ALIGNMENT

INDICATOR	ADJUST	REMARKS
RF Wattmeter or Field Strength Meter	R8, A26	Set R9 (SB Bias) fully counterclockwise as from the front panel. Key transmitter and null the carrier using R8 and A26.
RF Monitor Scope and RF Wattmeter	R9	Connect a two tone generator to the microphone jack and adjust the output for an RF output of 1 watt. Increase the SB bias with R9 until the SB lobes come together at the zero crossing. Reduce the audio level to maintain the reference power output level.

6MC OSCILLATOR ALIGNMENT

INDICATOR	ADJUST	REMARKS
RF Wattmeter	A17	Connect a 1KC audio generator to the microphone input and adjust to produce 1 watt on the RF wattmeter. Switch between LSB and VSB while adjusting A17 for equal output in both modes.

20MC OSCILLATOR ALIGNMENT

INDICATOR	ADJUST	REMARKS
Frequency Counter	A14,A15, A16	Short the junction of R131 and R8 to ground. Set mode switch to USB. Adjust A14 only if all crystal frequencies are high or low. Set mode switch to LSB and adjust A16 for "on channel" frequency. Remove the short at the junction of R131 and R8. Set mode switch to AM and adjust A15 for "on channel" frequency.

RF POWER and SWR METER CALIBRATION

INDICATOR	ADJUST	REMARKS
RF Power Meter	R11	Key transmitter and adjust R11 so that receiver meter reads the same as the external standard.
SWR Meter	A25	Key transmitter. Set meter switch to SWR cal and adjust R10 (SWR cal) till the receiver meter reads at the SWR cal mark. Set meter switch to SWR and adjust A25 so that the receiver meter reads the same as the external standard SWR meter.

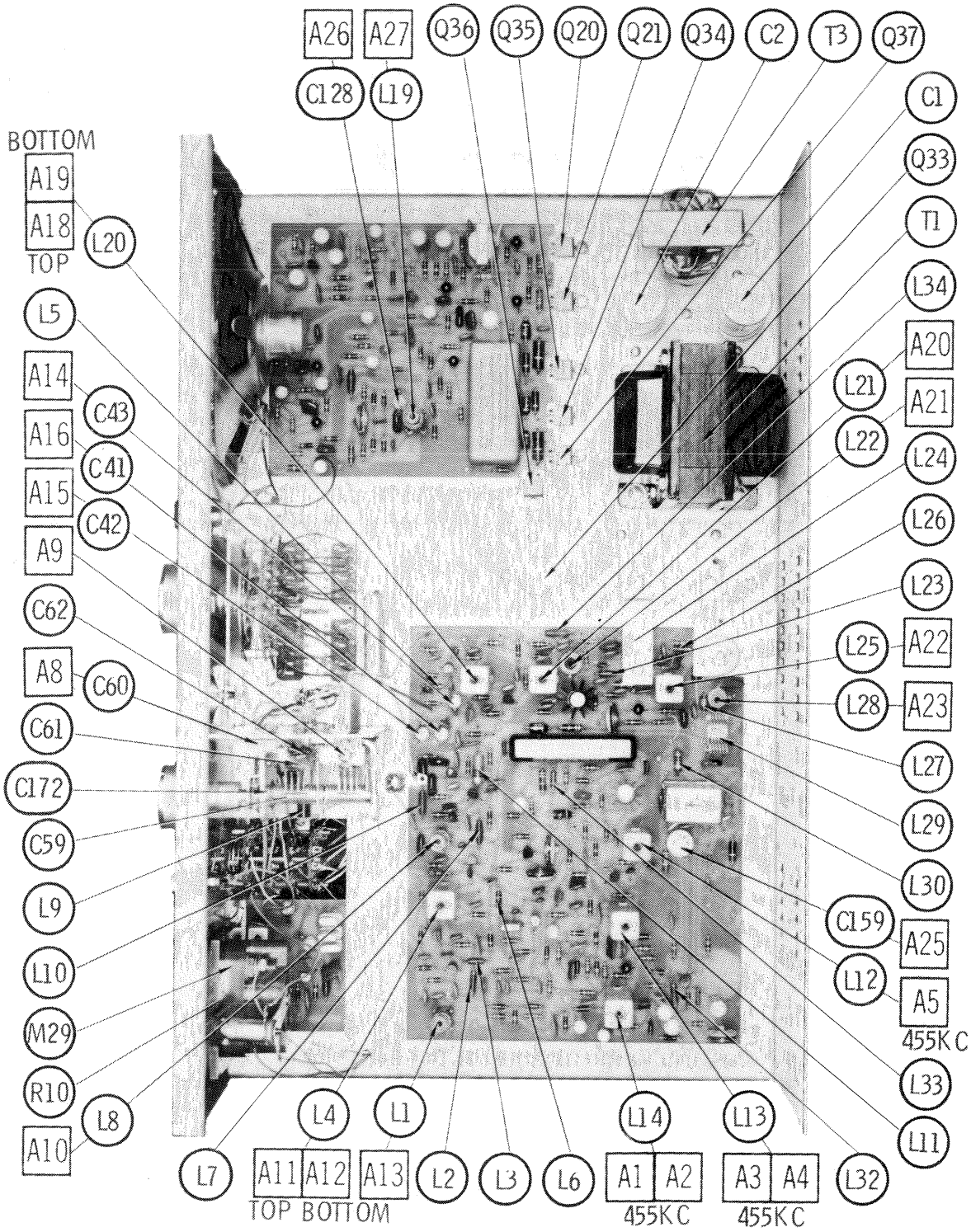
A26
A27
Q36
Q35
Q20
Q21
Q34
C2
T3
Q37
C128
L19
C1
Q33
T1
L34
A20
A21
L21
L22
L24
L26
L23
A22
L25
L28
A23
L27
L29
L30
C159
A25
L12
A5
455KC
L33
L11
L32
A3
A4
455KC
L13
A1
A2
455KC
L14
L2
L3
L6
L1
L4
A11
A12
TOP BOTTOM
A13
L7
L8
A10
R10
M29
L10
L9
C59
C172
C61
A8
C60
C62
A9
C42
A15
C41
A16
C43
A14
L5
L20
A18
TOP
A19
BOTTOM

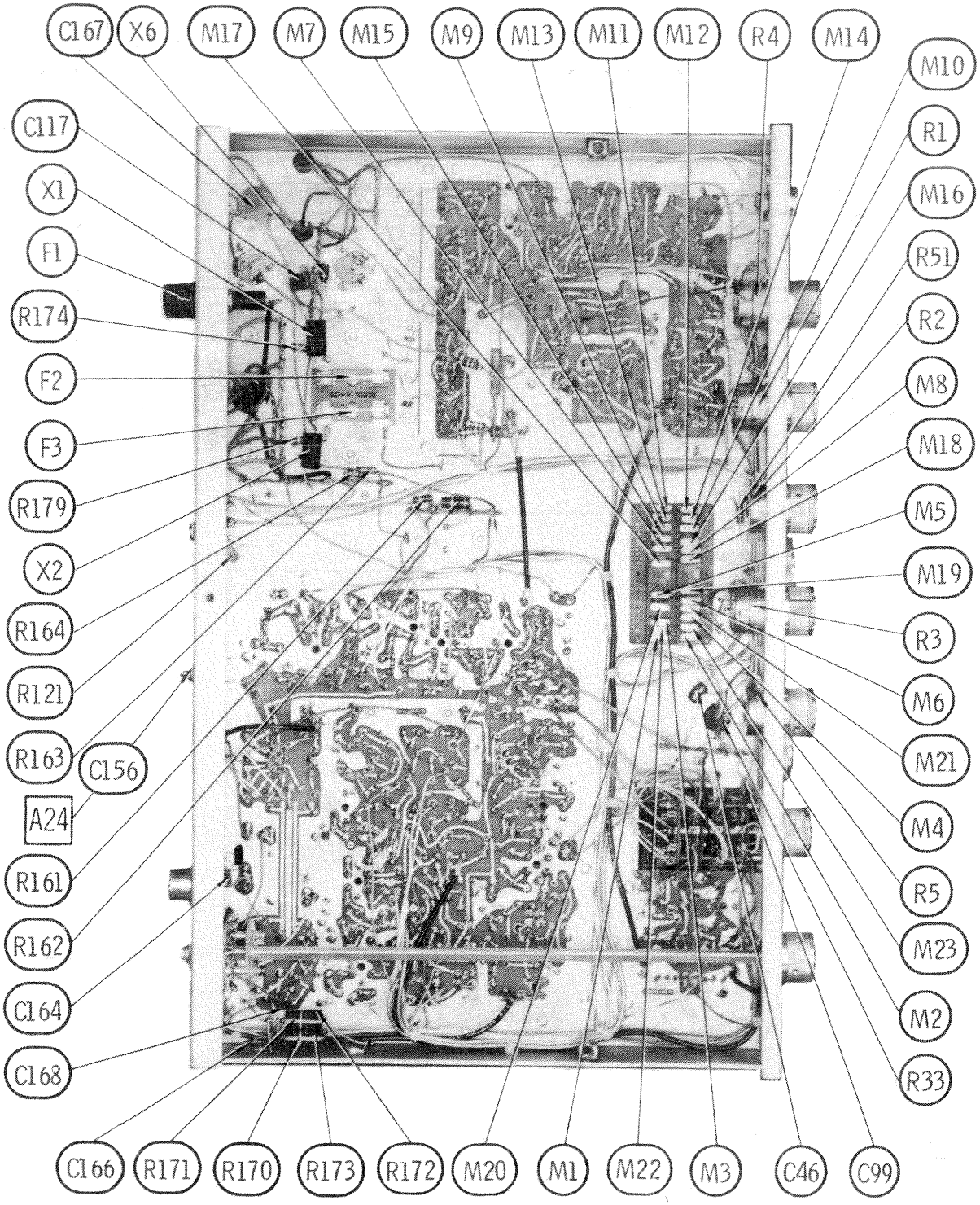
C167
X6
M17
M7
M15
M9
M13
M11
M12
R4
M14
M10
C117
R1
X1
M16
F1
R51
R174
R2
F2
M8
F3
M18
R179
M5
X2
M19
R164
R3
R121
M6
R163
C156
M21
A24
M4
R161
R5
R162
M23
C164
M2
C168
R33
C166
R171
R170
R173
R172
M20
M1
M22
M3
C46
C99

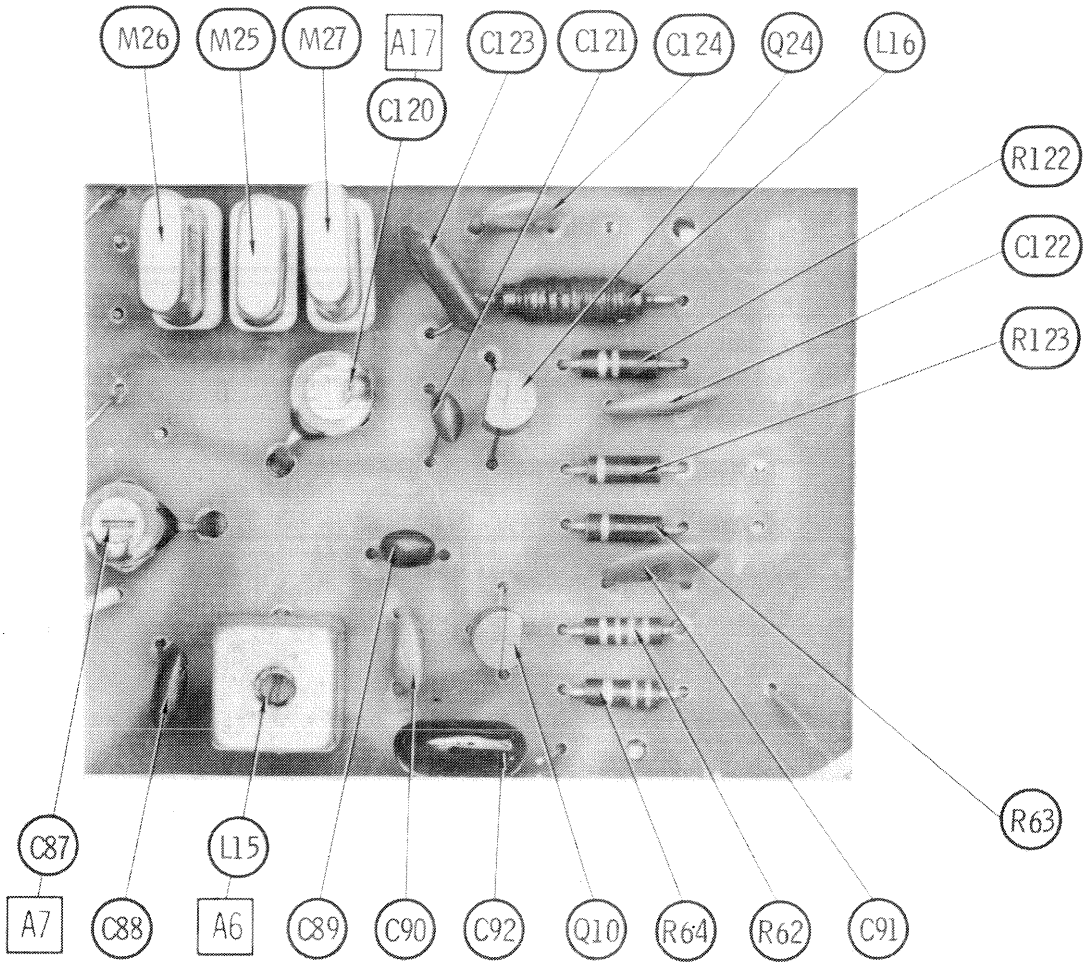

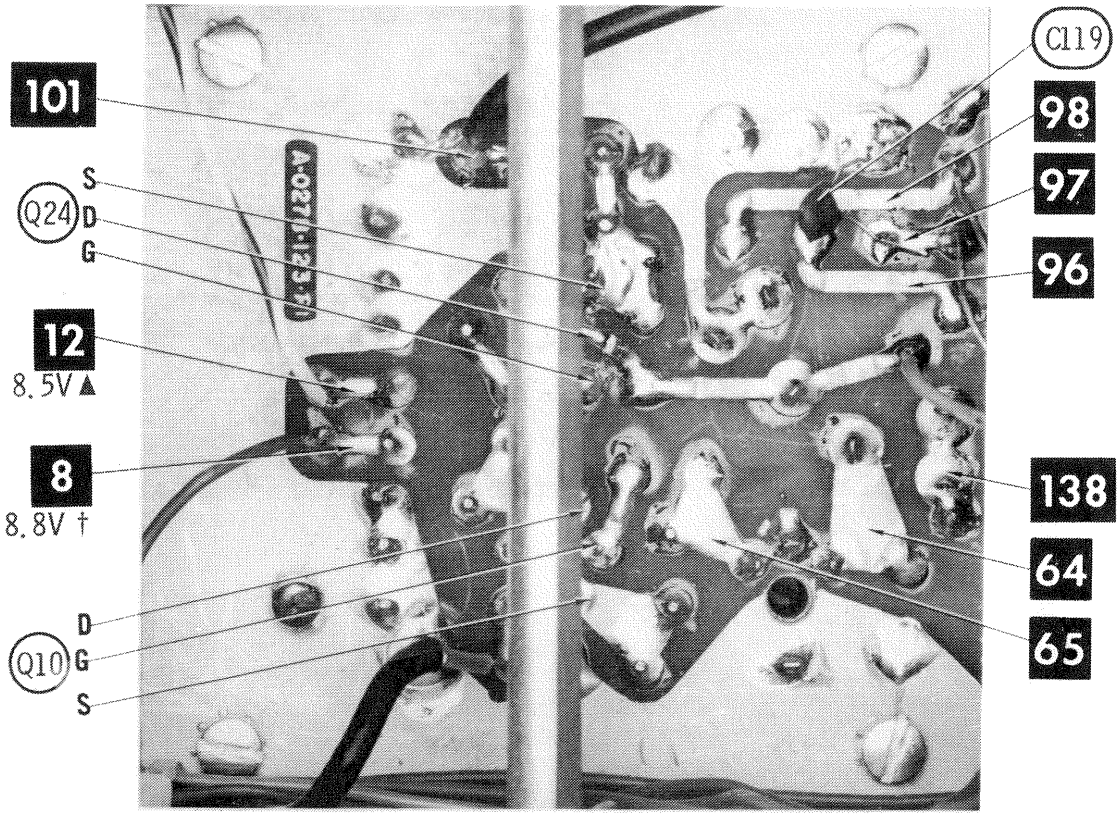

A Howard W. Sams CIRCUITRACE Photo

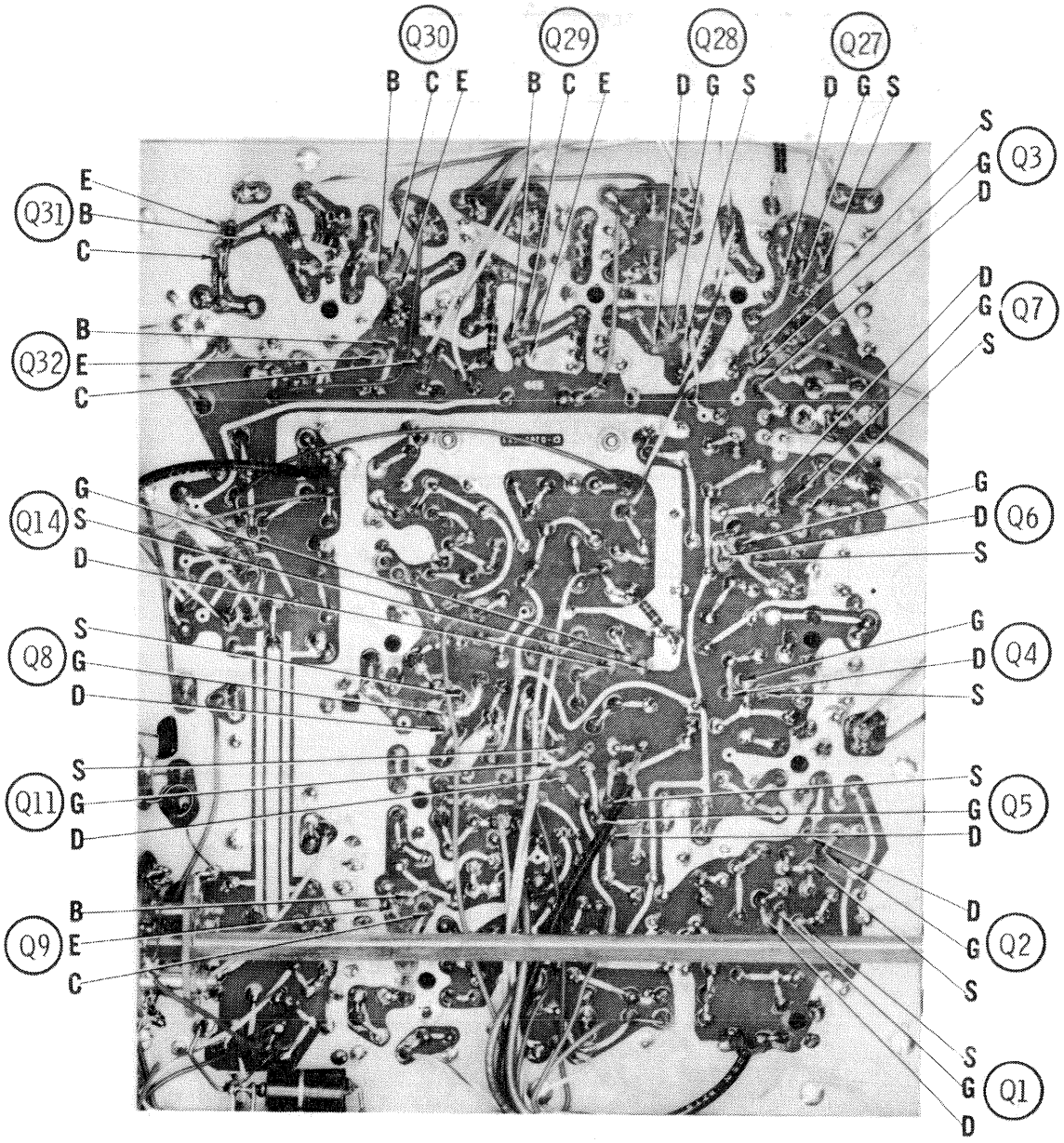
Q30
B C E
Q29
B C E
Q28
D G S
Q27
D G S
Q31
E
B
C
Q32
B
E
C
Q14
G
S
D
Q8
S
G
D
Q11
S
G
D
Q9
B
E
C
Q3
S
G
D
Q7
D
G
S
Q6
G
D
S
Q4
G
D
S
Q5
S
G
D
Q2
D
G
S
Q1
S
G
D

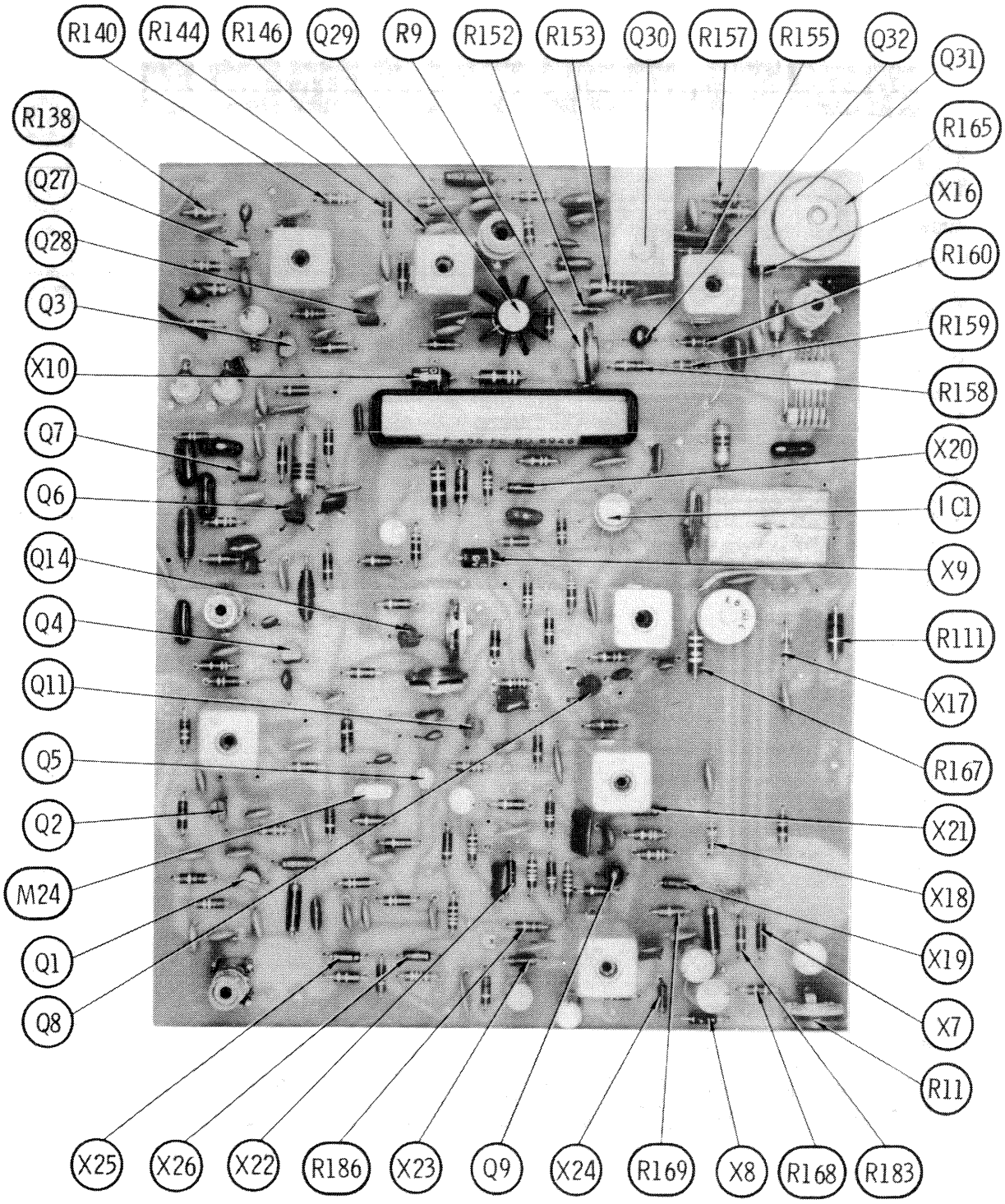
R140
R144
R146
Q29
R9
R152
R153
Q30
R157
R155
Q32
Q31
R138
R165
Q27
X16
Q28
R160
Q3
R159
X10
R158
Q7
X20
Q6
I C1
Q14
X9
Q4
R111
Q11
X17
Q5
R167
Q2
X21
M24
X18
Q1
X19
Q8
X7
R11
X25
X26
X22
R186
X23
Q9
X24
R169
X8
R168
R183

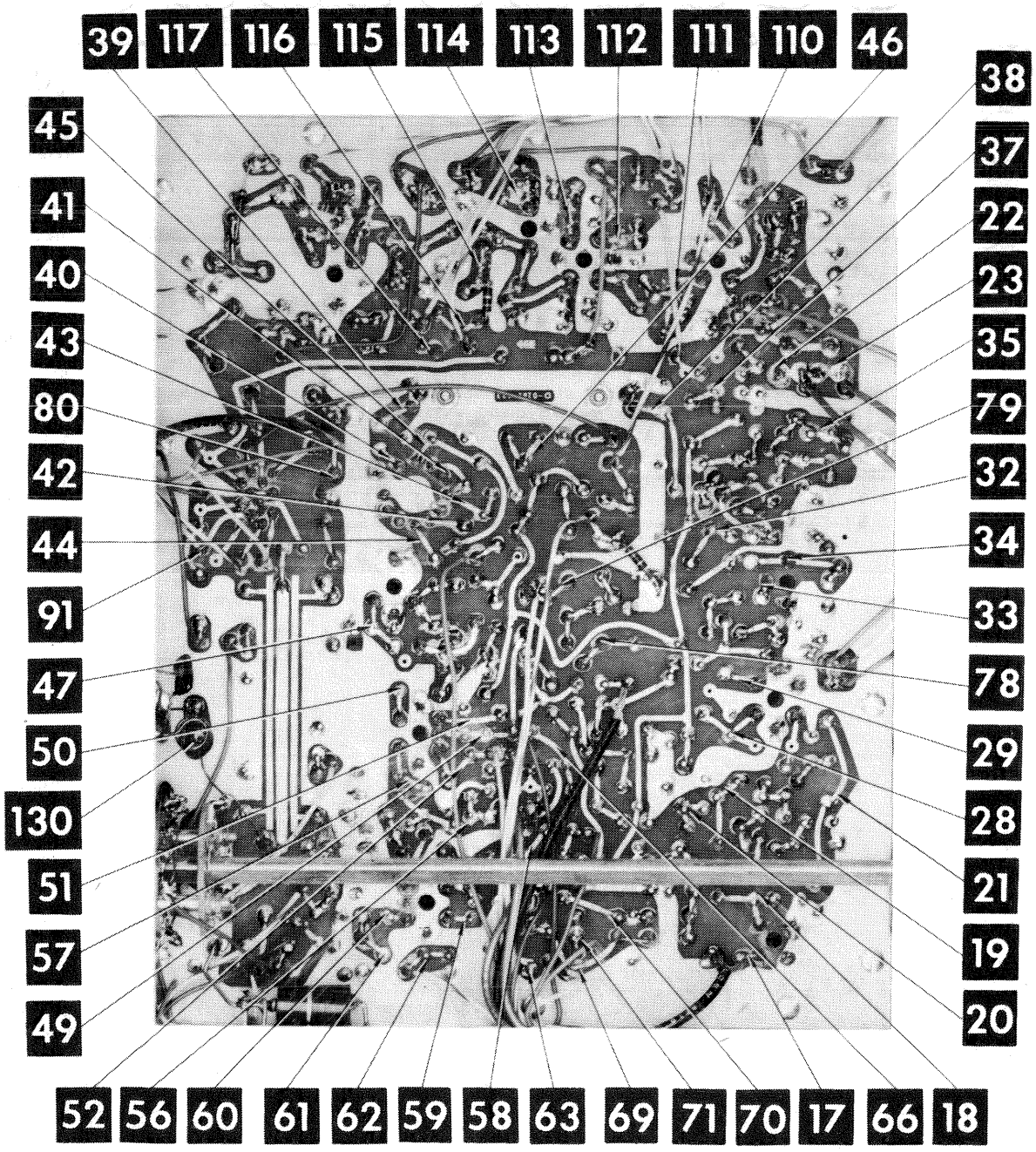

A Howard W. Sams CIRCUITRACE® Photo

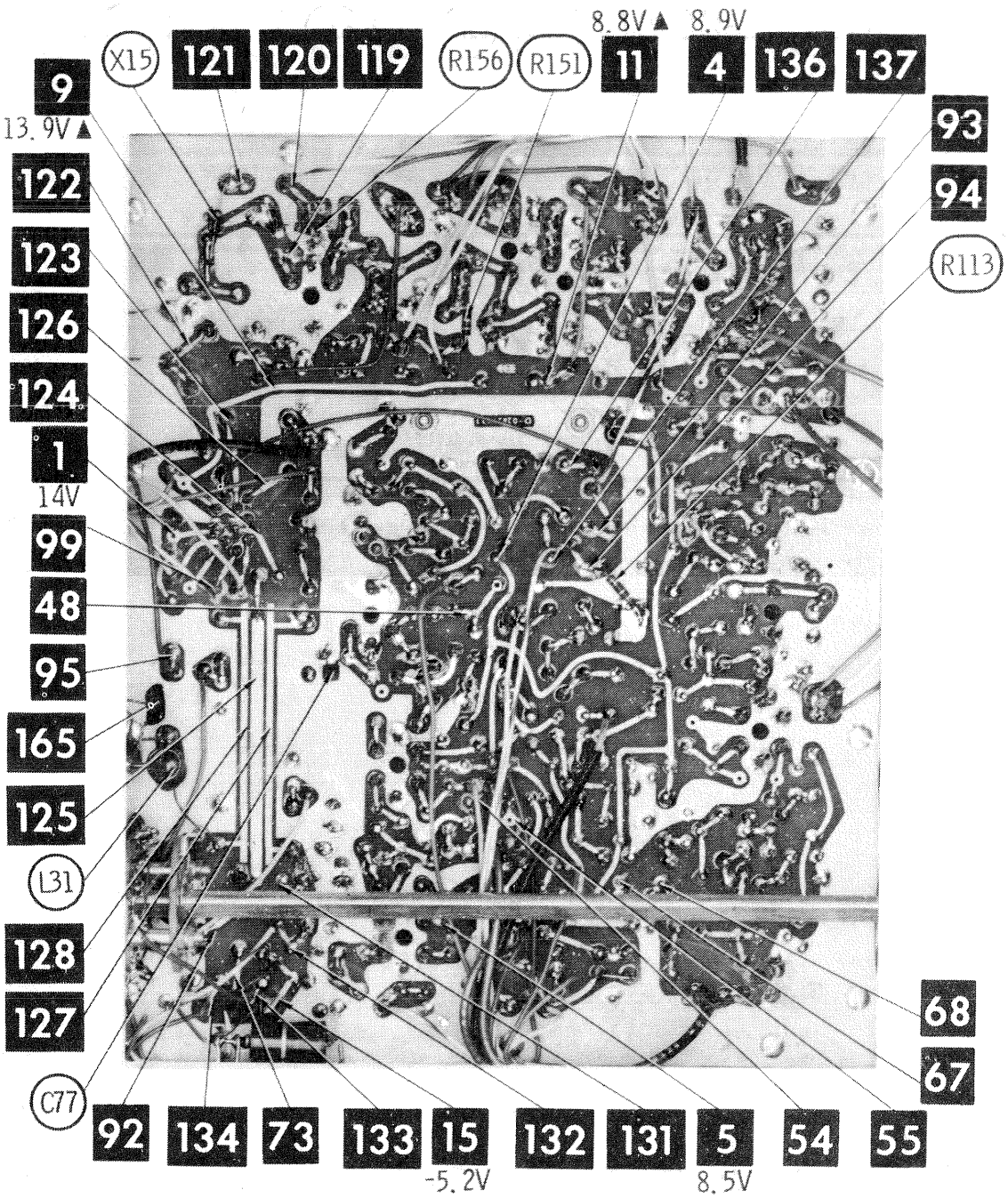

A Howard W. Sams CIRCUITRACE Photo

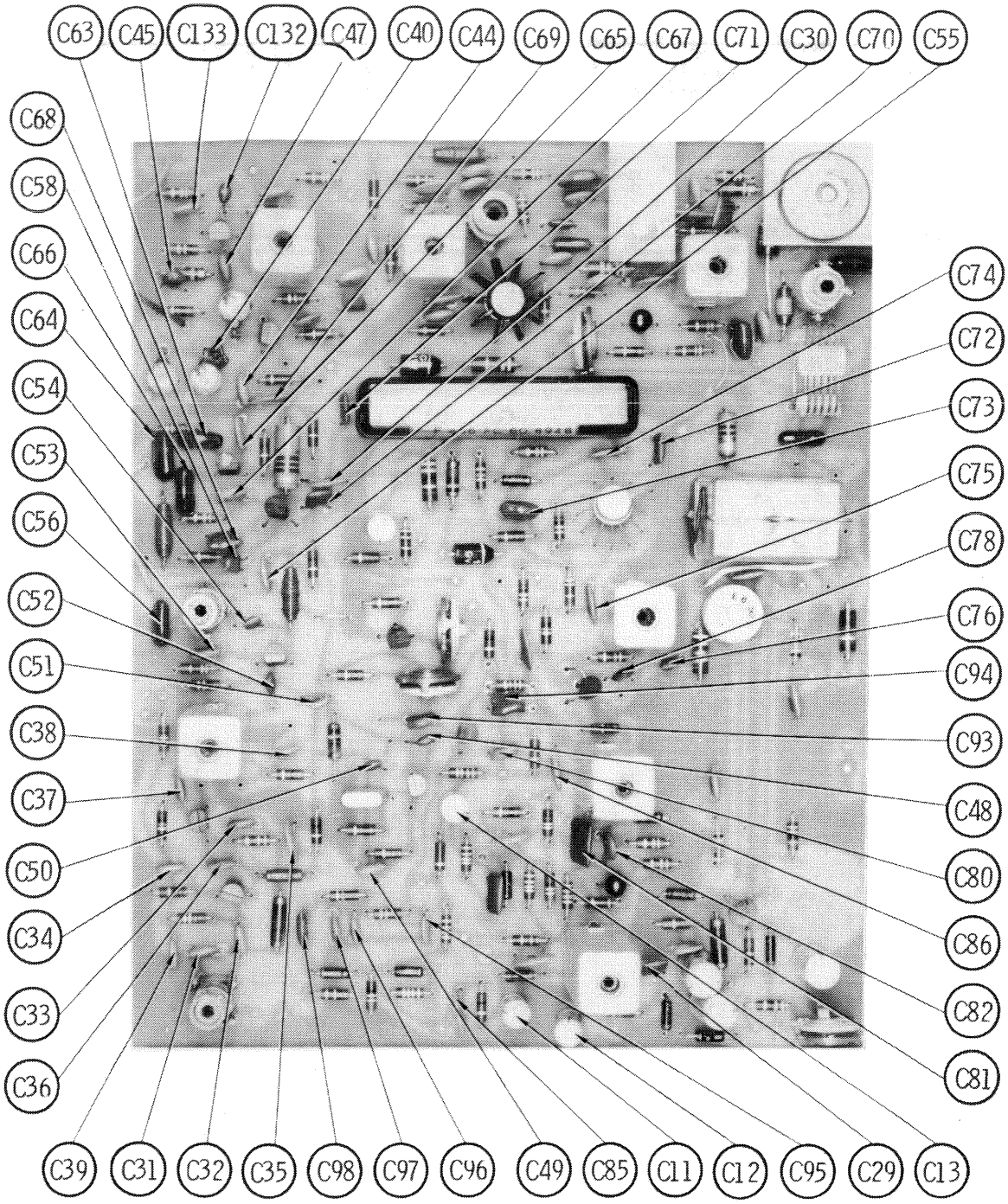
C63
C45
C133
C132
C47
C40
C44
C69
C65
C67
C71
C30
C70
C55
C68
C58
C66
C64
C54
C53
C56
C52
C51
C38
C37
C50
C34
C33
C36
C74
C72
C73
C75
C78
C76
C94
C93
C48
C80
C86
C82
C81
C39
C31
C32
C35
C98
C97
C96
C49
C85
C11
C12
C95
C29
C13

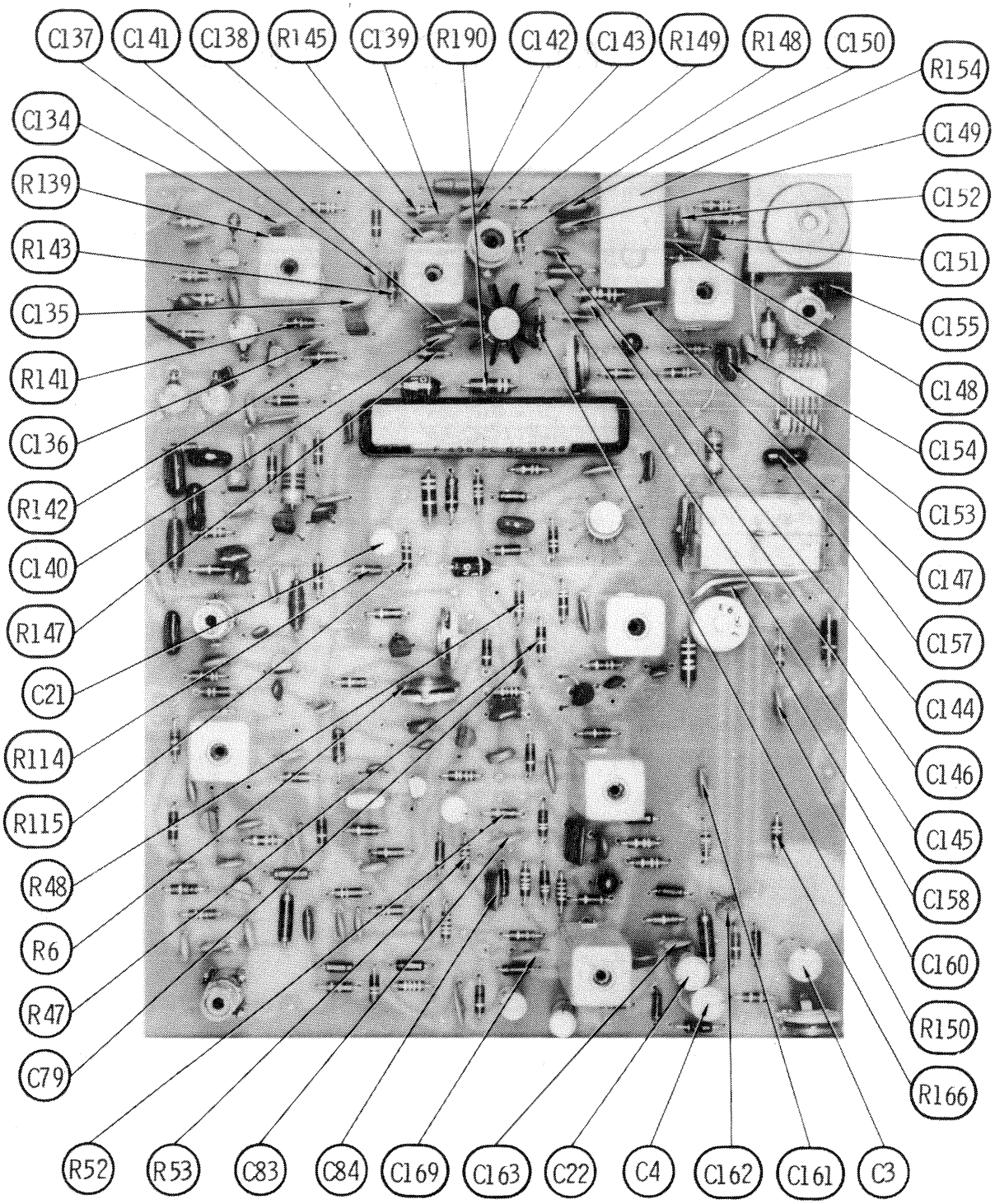
C137
C141
C138
R145
C139
R190
C142
C143
R149
R148
C150
R154
C149
C152
C151
C155
C148
C154
C153
C147
C157
C144
C146
C145
C158
C160
R150
R166
C134
R139
R143
C135
R141
C136
R142
C140
R147
C21
R114
R115
R48
R6
R47
C79
R52
R53
C83
C84
C169
C163
C22
C4
C162
C161
C3

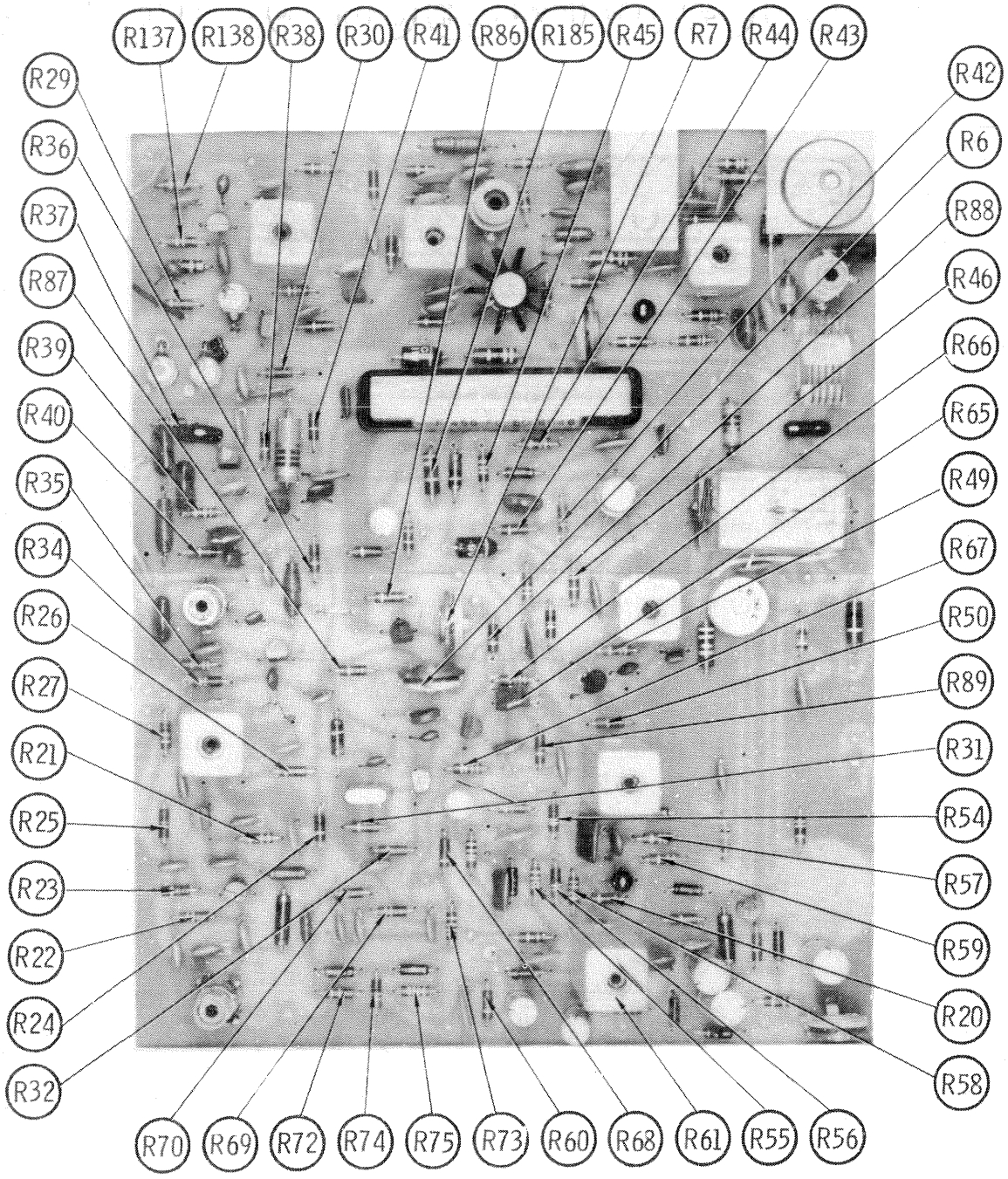
R137
R138
R38
R30
R41
R86
R185
R45
R7
R44
R43
R42
R6
R88
R46
R66
R65
R49
R67
R50
R89
R31
R54
R57
R59
R20
R58
R56
R55
R61
R68
R60
R73
R75
R74
R72
R69
R70
R32
R24
R22
R23
R25
R21
R27
R26
R34
R35
R40
R39
R87
R37
R36
R29

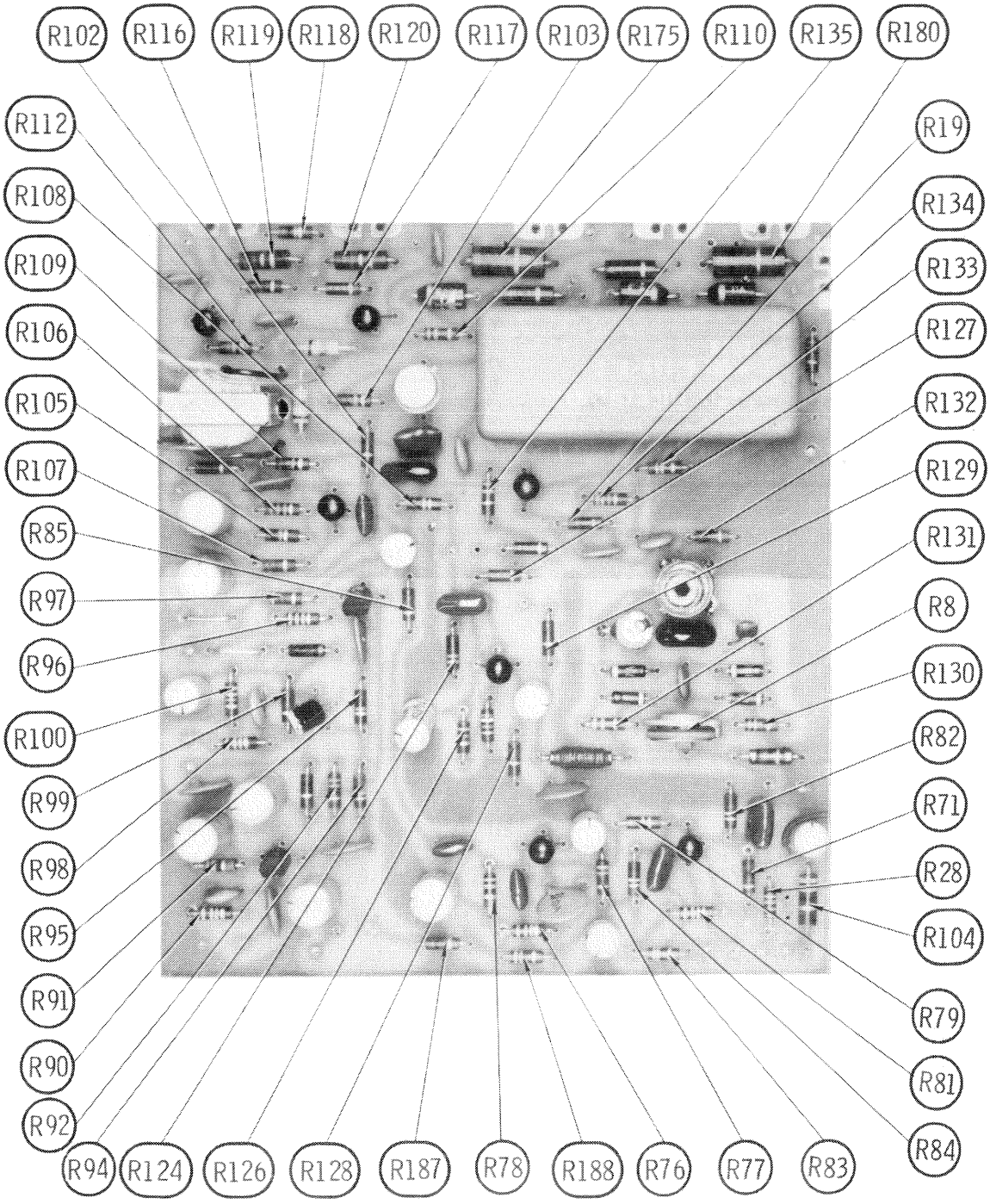
R102
R116
R119
R118
R120
R117
R103
R175
R110
R135
R180
R112
R108
R109
R106
R105
R107
R85
R97
R96
R100
R99
R98
R95
R91
R90
R92
R94
R124
R126
R128
R187
R78
R188
R76
R77
R83
R84
R81
R79
R104
R28
R71
R82
R130
R8
R131
R129
R132
R127
R133
R134
R19

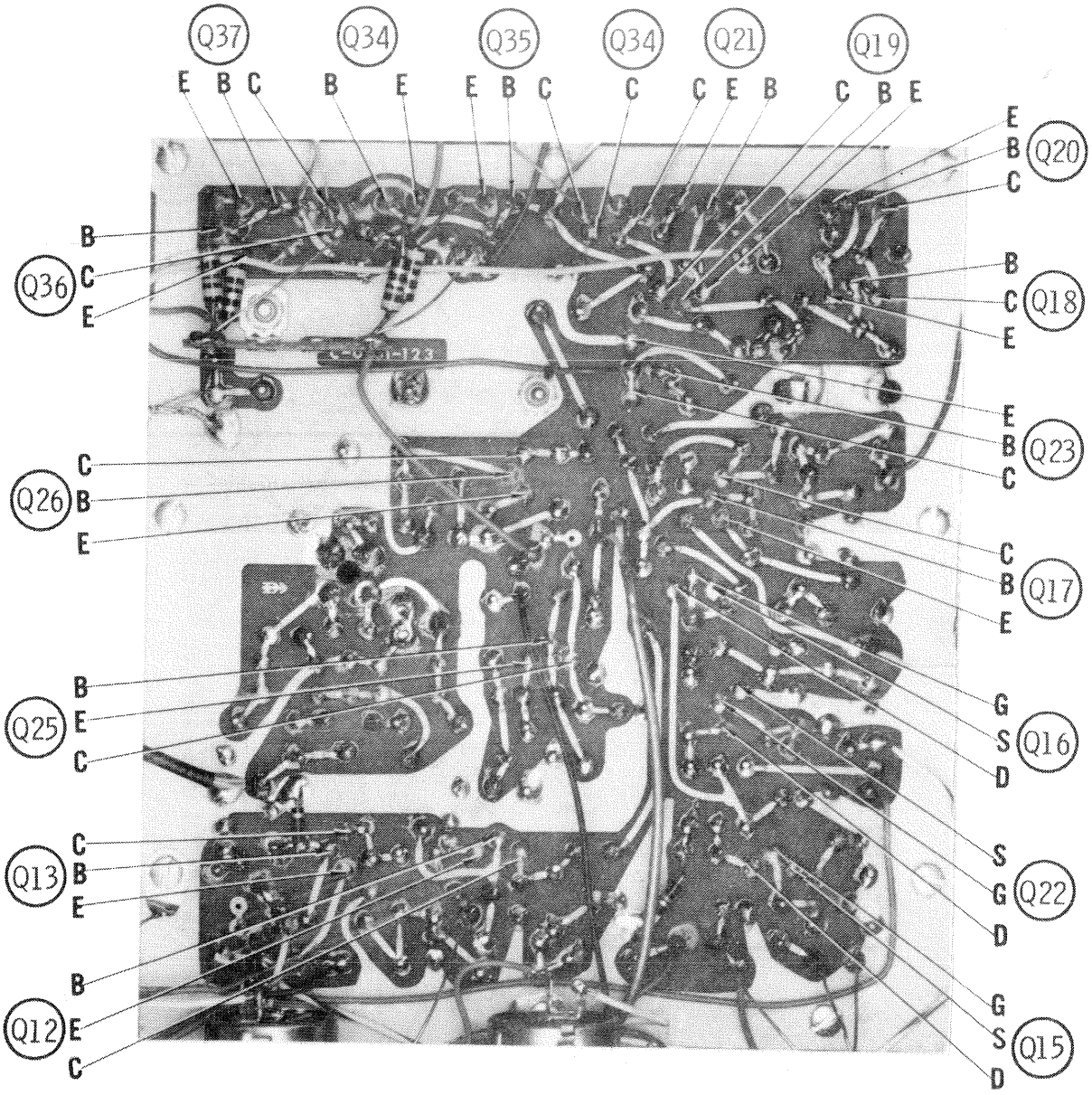

A Howard W. Sams CIRCUITRACE® Photo

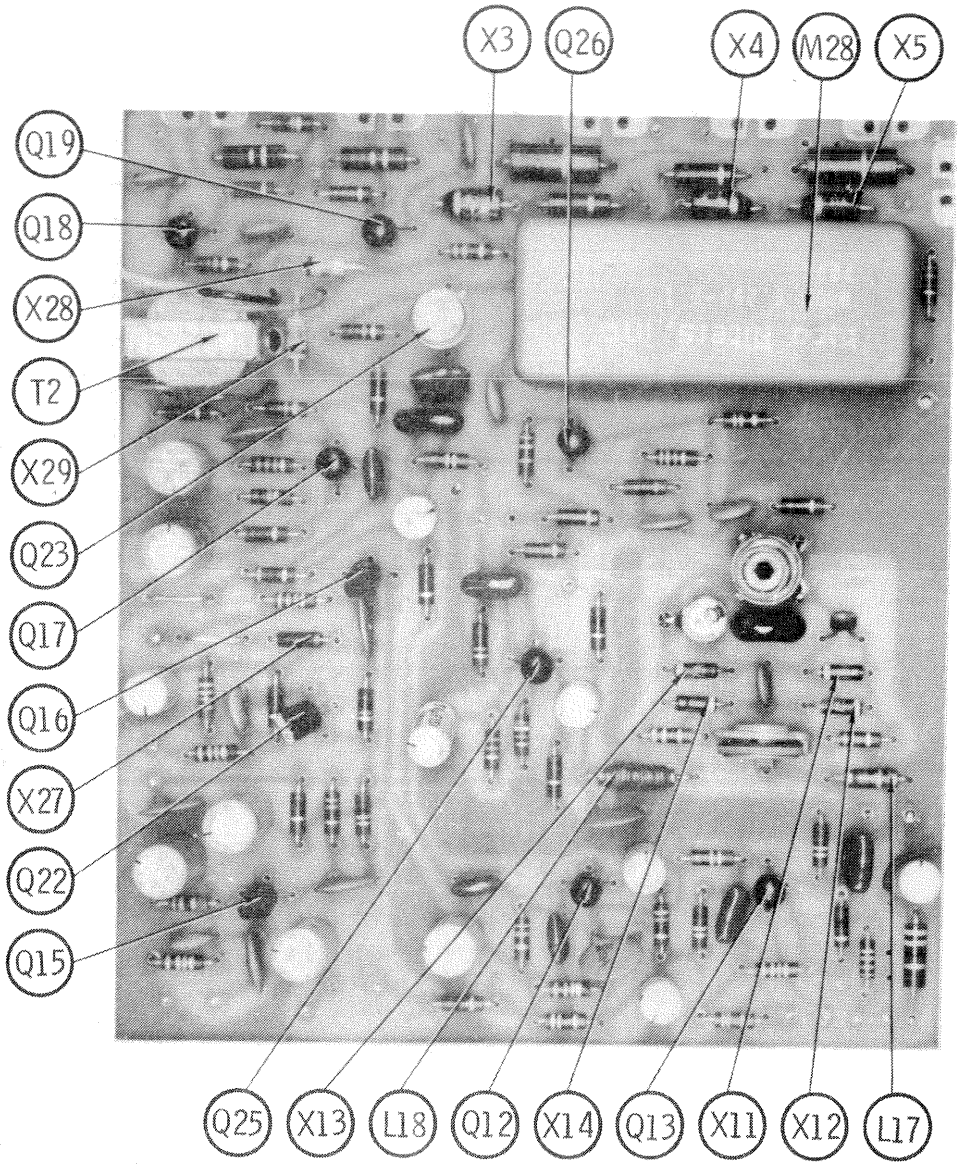
X3
Q26
X4
M28
X5
Q19
Q18
X28
T2
X29
Q23
Q17
Q16
X27
Q22
Q15
Q25
X13
L18
Q12
X14
Q13
X11
X12
L17

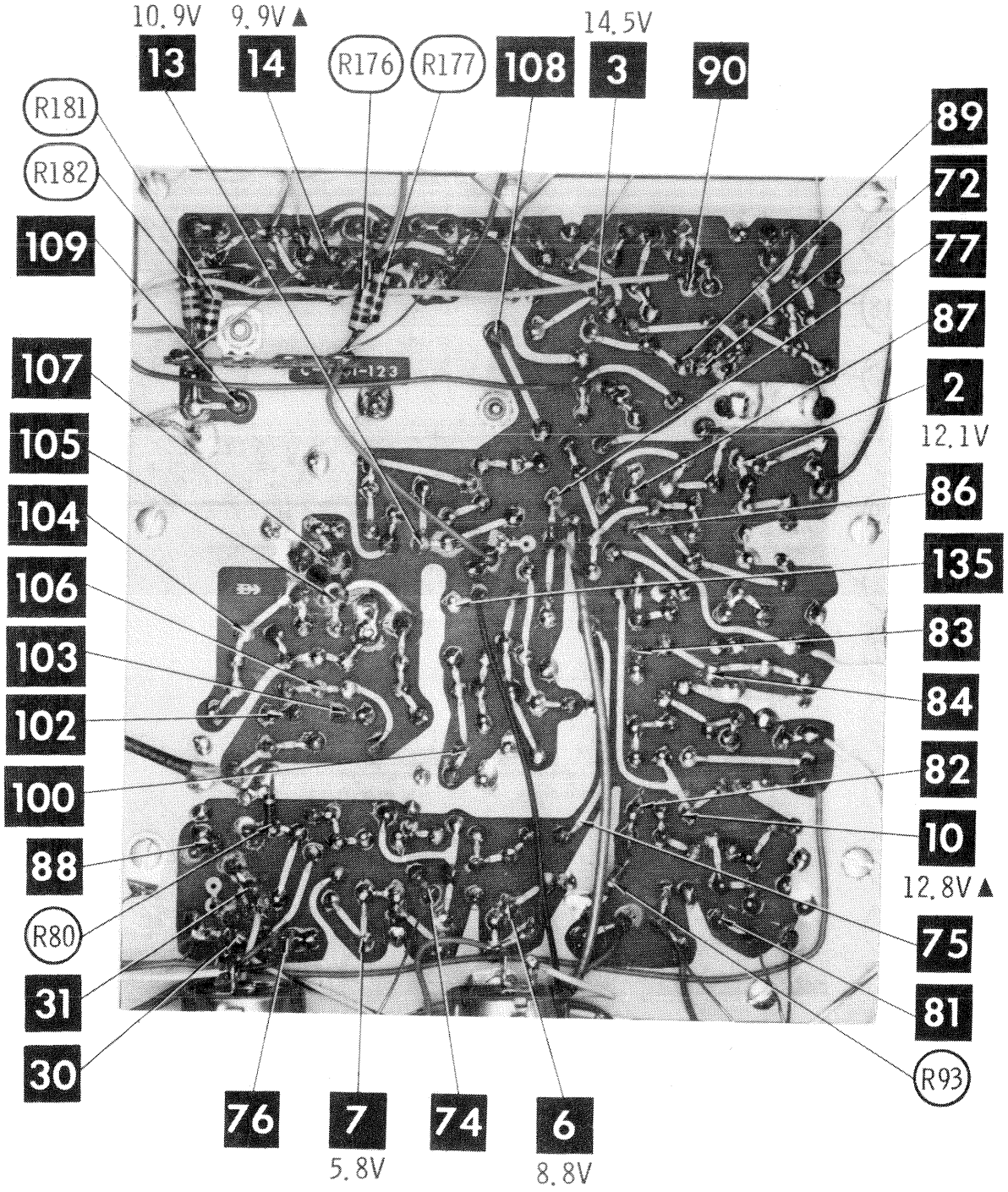

A Howard W. Sams CIRCUITRACE® Photo

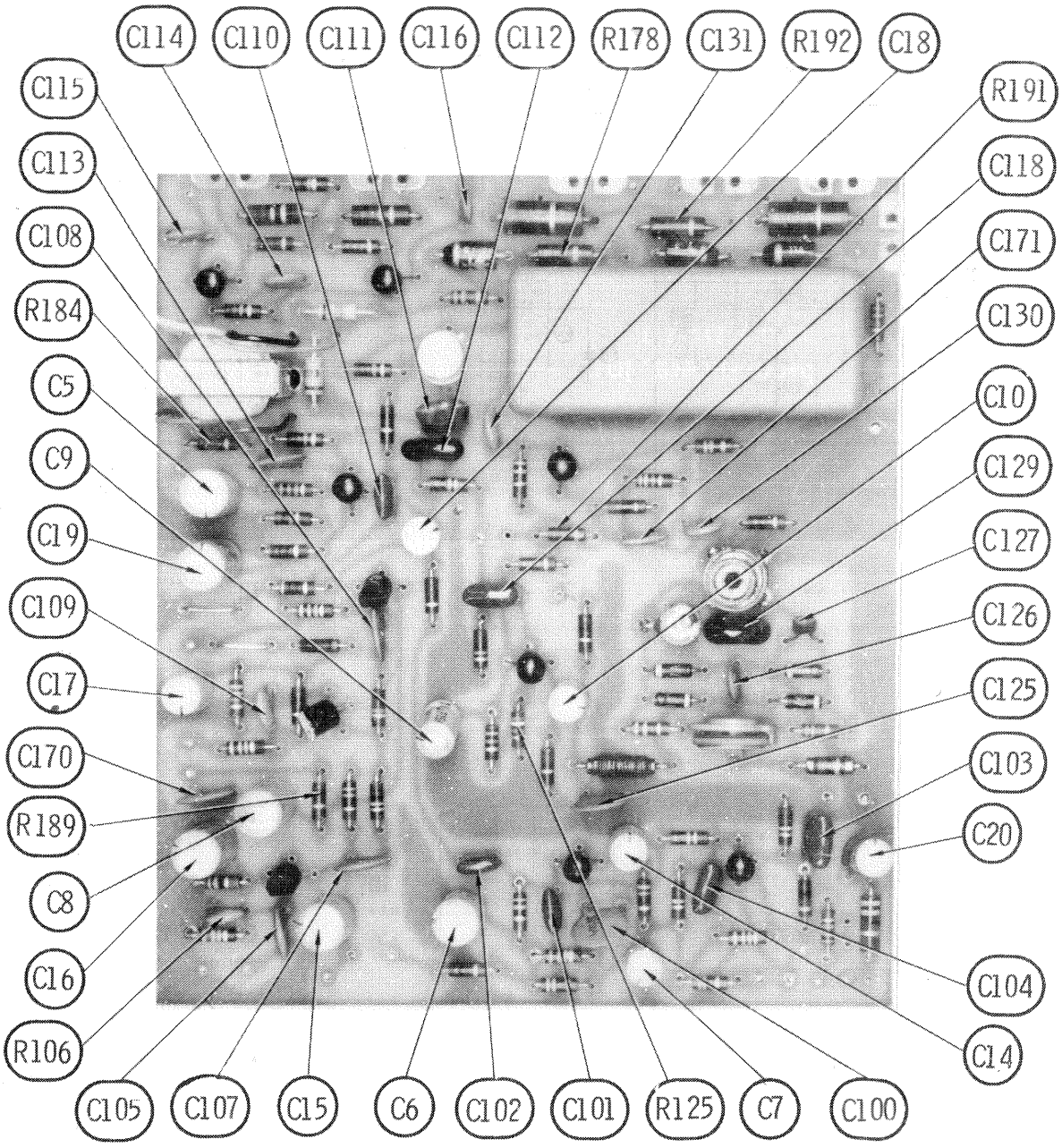
C114
C110
C111
C116
C112
R178
C131
R192
C18
C115
C113
C108
R184
C5
C9
C19
C109
C17
C170
R189
C8
C16
R106
C105
C107
C15
C6
C102
C101
R125
C7
C100
R191
C118
C171
C130
C10
C129
C127
C126
C125
C103
C20
C104
C14

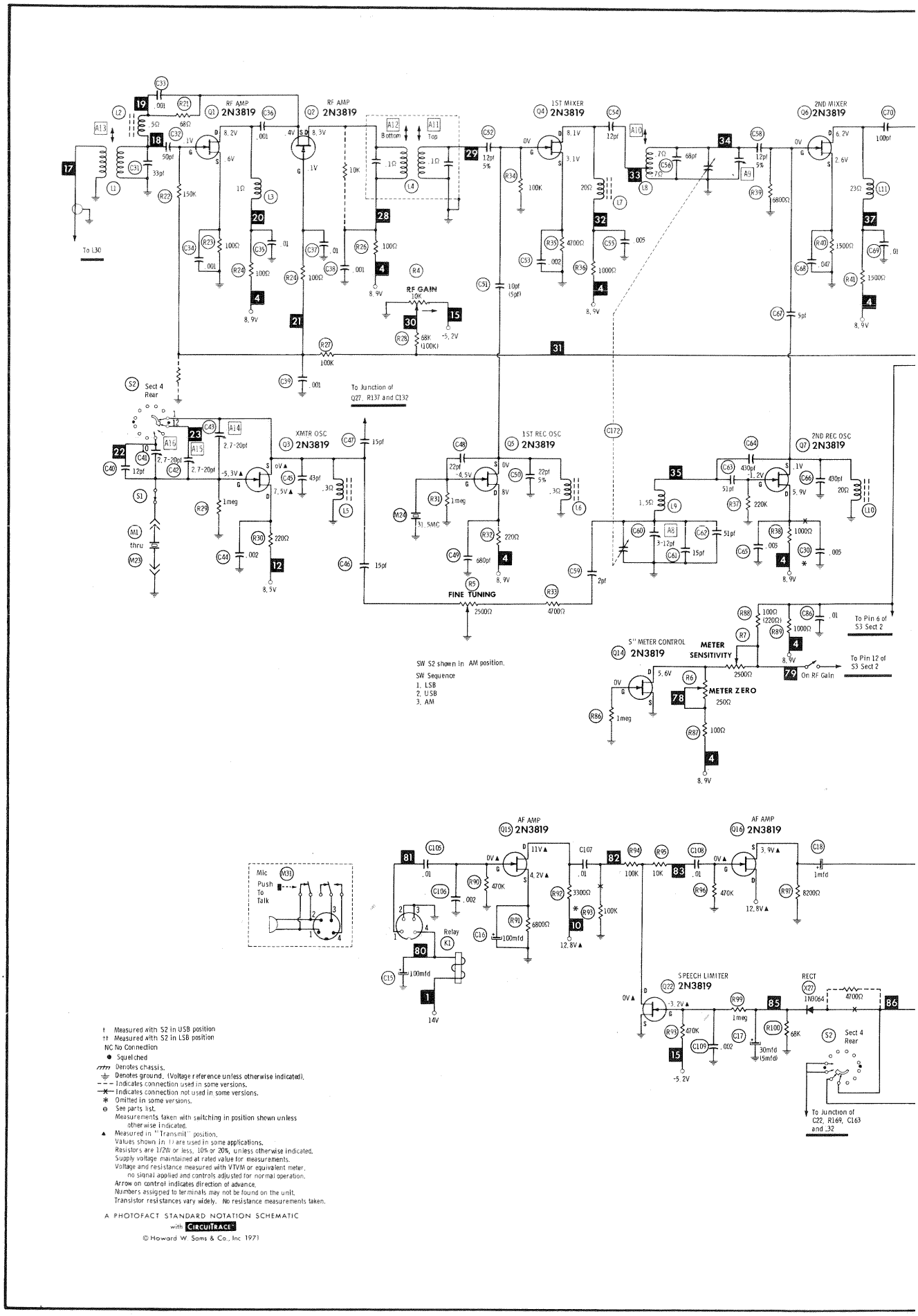
RF AMP
Q1 2N3819
RF AMP
Q2 2N3819
1ST MIXER
Q4 2N3819
2ND MIXER
Q6 2N3819
RF GAIN
10K
FINE TUNING
2500Ω
XMTR OSC
Q3 2N3819
1ST REC OSC
Q5 2N3819
2ND REC OSC
Q7 2N3819
S" METER CONTROL
Q14 2N3819
METER SENSITIVITY
METER ZERO
To Junction of Q27, R137 and C132
To Pin 6 of S3 Sect 2
To Pin 12 of S3 Sect 2
On RF Gain
To L30
Sect 4 Rear
SW S2 shown in AM position.
SW Sequence
1. LSB
2. USB
3. AM
Mic Push To Talk
Relay K1
AF AMP
Q15 2N3819
AF AMP
Q16 2N3819
SPEECH LIMITER
Q22 2N3819
RECT
X27 1N3064
To Junction of C22, R169, C163 and .32
† Measured with S2 in USB position
†† Measured with S2 in LSB position
NC No Connection
● Squelched
Denotes chassis.
Denotes ground. (Voltage reference unless otherwise indicated).
Indicates connection used in some versions.
Indicates connection not used in some versions.
* Omitted in some versions.
⊖ See parts list.
Measurements taken with switching in position shown unless otherwise indicated.
▲ Measured in "Transmit" position.
Values shown in ( ) are used in some applications.
Resistors are 1/2W or less, 10% or 20%, unless otherwise indicated.
Supply voltage maintained at rated value for measurements.
Voltage and resistance measured with VTVM or equivalent meter, no signal applied and controls adjusted for normal operation.
Arrow on control indicates direction of advance.
Numbers assigned to terminals may not be found on the unit.
Transistor resistances vary widely. No resistance measurements taken.
A PHOTOFACT STANDARD NOTATION SCHEMATIC
with CIRCUITRACE
© Howard W. Sams & Co., Inc. 1971

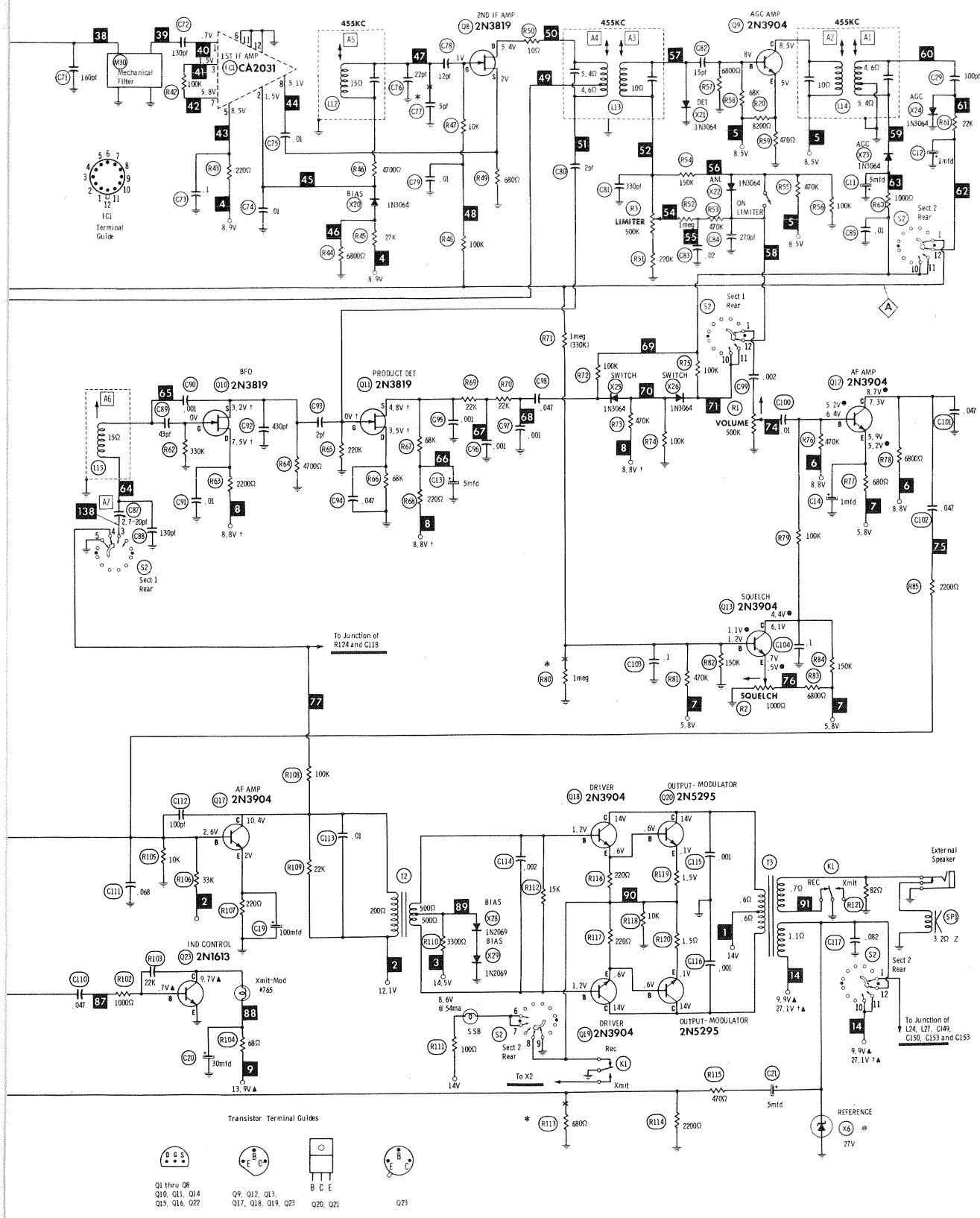

TRAM MODEL TITAN III

SEE PAGES 110 & 111 FOR TRANSMITTER & POWER SUPPLY

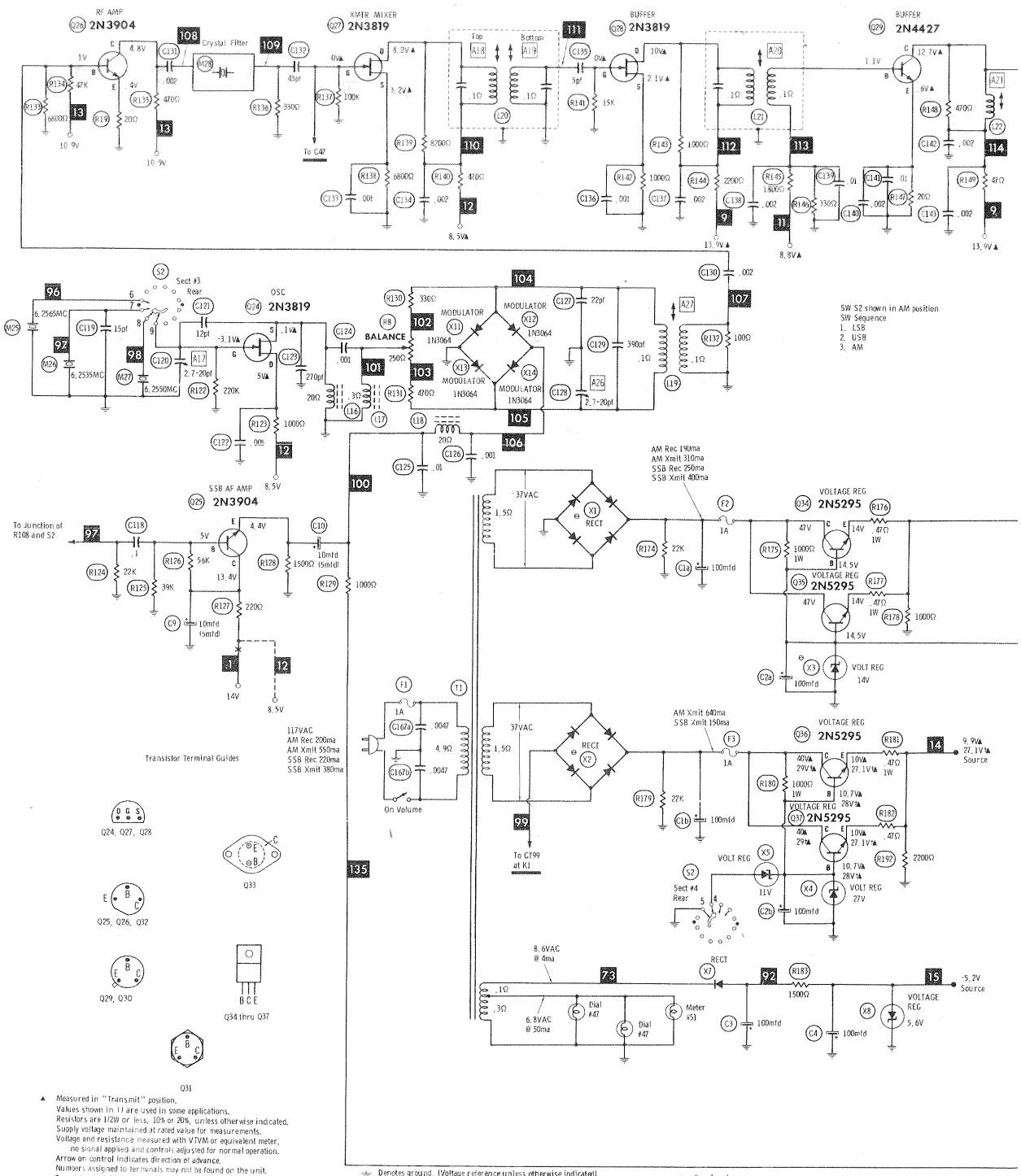

▲ Measured in "Transmit" position.
Values shown in ( ) are used in some applications.
Resistors are 1/2W or less, 10% or 20%, unless otherwise indicated.
Supply voltage maintained at rated value for measurements.
Voltage and resistance measured with VTVM or equivalent meter, no signal applied and controls adjusted for normal operation.
Arrow on control indicates direction of advance.
Numbers assigned to terminals may not be found on the unit.
Transistor resistances vary widely. No resistance measurements taken.

A PHOTOFACT STANDARD NOTATION SCHEMATIC with CIRCUITRACE

⏚ Denotes ground. (Voltage reference unless otherwise indicated).
- - - Indicates connection used in some versions.
—✱— Indicates connection not used in some versions.
✱ Omitted in some versions.
⊖ See parts list.
Measurements taken with switching in position shown unless otherwise indicated.

Denotes chassis.
NC No Connection
† Measured with S2 in USB position
†† Measured with S2 in LSB position

SEE PAGES 108 & 109 FOR RECEIVER

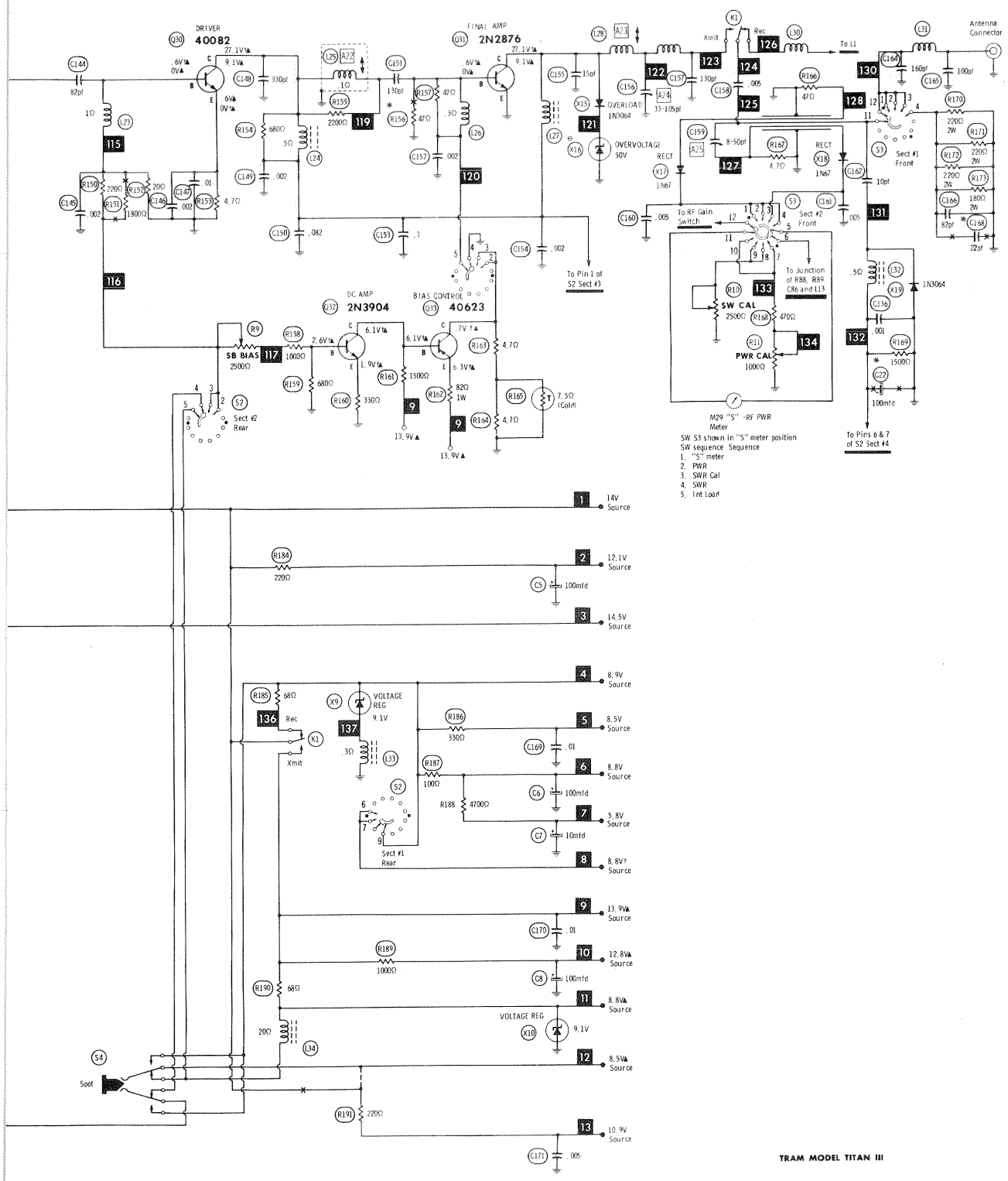

TRAM MODEL TITAN III

PARTS LIST AND DESCRIPTION

(When ordering parts, state Model, Part Number, and Description.)

TRANSISTORS

ITEM No.	TYPE No.	FUNCTION	REPLACEMENT DATA					
			MFGR. PART No.	GENERAL ELECTRIC PART No.	INTERNATIONAL RECTIFIER PART No.	MOTOROLA PART No.	RCA PART No.	SYLVANIA PART No.
Q1	2N3819	RF Amp		GE-FET-1	TR-FE100	HEP802		ECG 132
Q2	2N3819	RF Amp		GE-FET-1	TR-FE100	HEP802		ECG 132
Q3	2N3819	Xmtr. Oscillator		GE-FET-1	TR-FE100	HEP802		ECG 132
Q4	2N3819	1st Mixer		GE-FET-1	TR-FE100	HEP802		ECG 132
Q5	2N3819	1st Rec. Oscillator		GE-FET-1	TR-FE100	HEP802		ECG 132
Q6	2N3819	2nd Mixer		GE-FET-1	TR-FE100	HEP802		ECG 132
Q7	2N3819	2nd Rec. Oscillator		GE-FET-1	TR-FE100	HEP802		ECG 132
Q8	2N3819	2nd IF Amp		GE-FET-1	TR-FE100	HEP802		ECG 132
Q9	2N3904	AGC Amp		GE-18	TR-25	HEP243	SK3024	ECG 128
Q10	2N3819	BFO		GE-FET-1	TR-FE100	HEP802		ECG 132
Q11	2N3819	Product Detector		GE-FET-1	TR-FE100	HEP802		ECG 132
Q12	2N3904	AF Amp		GE-18	TR-25	HEP243	SK3024	ECG 128
Q13	2N3904	Squelch		GE-18	TR-25	HEP243	SK3024	ECG 128
Q14	2N3819	"S" Meter Control		GE-FET-1	TR-FE100	HEP802		ECG 132
Q15	2N3819	AF Amp		GE-FET-1	TR-FE100	HEP802		ECG 132
Q16	2N3819	AF Amp		GE-FET-1	TR-FE100	HEP802		ECG 132
Q17	2N3904	AF Amp		GE-18	TR-25	HEP243	SK3024	ECG 128
Q18	2N3904	Driver		GE-18	TR-25	HEP243	SK3024	ECG 128
Q19	2N3904	Driver		GE-18	TR-25	HEP243	SK3024	ECG 128
Q20	2N5295	Output-Modulator		GEMR-6	IRTR-55	HEP245	SK3024	ECG 184
Q21	2N5295	Output-Modulator		GEMR-6	IRTR-55	HEP245	SK3024	ECG 184
Q22	2N3819	Speech Limiter		GE-FET-1	TR-FE100	HEP802		ECG 132
Q23	2N1613	Ind. Control		GE-18	TR-21	HEP243	SK3024	ECG 128
Q24	2N3819	Oscillator		GE-FET-1	TR-FE100	HEP802		ECG 132
Q25	2N3904	SSB AF Amp		GE-18	TR-25	HEP243	SK3024	ECG 128
Q26	2N3904	RF Amp		GE-18	TR-25	HEP243	SK3024	ECG 128
Q27	2N3819	Xmtr. Mixer		GE-FET-1	TR-FE100	HEP802		ECG 132
Q28	2N3819	Buffer		GE-FET-1	TR-FE100	HEP802		ECG 132
Q29	2N4427	Buffer		GE-18	TR-21	HEP243	SK3047	ECG 128
Q30	40082	Driver		GE-18		HEP243	SK3024	ECG 128
Q31	2N2876	Final Amp						
Q32	2N3904	DC Amp		GE-18	TR-25	HEP243	SK3024	ECG 128
Q33	40623	Bias Control		GE-3	TR-02	HEP230	SK3014	ECG 104
Q34	2N5295	Voltage Regulator		GEMR-6	IRTR-55	HEP245	SK3054	ECG 184
Q35	2N5295	Voltage Regulator		GEMR-6	IRTR-55	HEP245	SK3054	ECG 184
Q36	2N5295	Voltage Regulator		GEMR-6	IRTR-55	HEP245	SK3054	ECG 184
Q37	2N5295	Voltage Regulator		GEMR-6	IRTR-55	HEP245	SK3054	ECG 184

INTEGRATED CIRCUITS

ITEM No.	FUNCTION	MFGR. PART No.	REMARKS
IC1	1st IF Amp	(CA3021)	

POWER RECTIFIERS & SIGNAL DIODES

ITEM No.	MFGR. PART OR TYPE No.	REPLACEMENT DATA				NOTES
		GENERAL ELECTRIC PART No.	INTERNATIONAL RECTIFIER PART No.	RCA PART No.	SYLVANIA PART No.	
X1	A-0205	GEBR-600 (1) or GE-504A	18DB2A (1) or 8D4	SK3030 or SK3031	ECG 166 (1) or ECG 116	
X2	A-0205	GEBR-600 (1) or GE-504A	18DB2A (1) or 8D4	SK3030 or SK3031	ECG 166 (1) or ECG 116	
X3		GEZD-15	Z1114		ECG 145	14V Zener 1W
X4		GEZD-27	Z1120		ECG 146	27V Zener 1W
X5		GEZD-12	Z1112		ECG 141	11V Zener 1W
X6		GEZD-27	Z1120		ECG 146	27V Zener 1W
X7	1N3064				ECG 177	
X8		GEZD-5.6	Z1104		ECG 136	5.6V Zener
X9		GEZD-9.1		KD2504	ECG 139	9.1V Zener 1W
X10		GEZD-9.1		KD2504	ECG 139	9.1V Zener 1W
X11	1N3064				ECG 177	
X12	1N3064				ECG 177	
X13	1N3064				ECG 177	
X14	1N3064				ECG 177	
X15	1N3064				ECG 177	
X16			Z1128		ECG 148	50V Zener 1W
X17	1N67	1N34AS	1N34A	1N34A	ECG 109	
X18	1N67	1N34AS	1N34A	1N34A	ECG 109	
X19	1N3064				ECG 177	
X20	1N3064				ECG 177	
X21	1N3064				ECG 177	
X22	1N3064				ECG 177	
X23	1N3064				ECG 177	
X24	1N3064				ECG 177	
X25	1N3064				ECG 177	
X26	1N3064				ECG 177	
X27	1N3064				ECG 177	
X28	1N2069	GE-504A	8D4 or 5A4D	SK3030 or SK3031	ECG 116 or ECG 117	
X29	1N2069	GE-504A	8D4 or 5A4D	SK3030 or SK3031	ECG 116 or ECG 117	

PARTS LIST AND DESCRIPTION (CONTINUED)

(When ordering parts, state Model, Part Number, and Description.)

ELECTROLYTIC CAPACITORS

ITEM No.	RATING		REPLACEMENT DATA						
			PART No.	AEROVOX PART No.	CENTRALAB PART No.	CORNELL-DUBILIER PART No.	GENERAL ELECTRIC PART No.	MALLORY PART No.	SPRAGUE PART No.
C1a	1000	50V				DD0007A			
b	1000	50V							
C2a	1000	50V				DD0007A			
b	1000	50V							
C3	100	15V		MCD-180	EP15-100	WBR100-16	MT1-19	MTV100CF15	TE-1162
C4	100	15V		MCD-180	EP15-100	WBR100-16	MT1-19	MTV100CF15	TE-1162
C5	100	15V		MCD-180	EP15-100	WBR100-16	MT1-19	MTV100CF15	TE-1162
C6	100	15V		MCD-180	EP15-100	WBR100-16	MT1-19	MTV100CF15	TE-1162
C7	10	15V		MCD-70	EP15-10	WBR10-25	MT1-5	MTV10CB50	TE-1155
C8	100	15V		MCD-180	EP15-100	WBR100-16	MT1-19	MTV100CF15	TE-1162
C9	10	15V		MCD-70	EP15-10	WBR10-25	MT1-5	MTV10CB50	TE-1155
C10	10	15V		MCD-70	EP15-10	WBR10-25	MT1-5	MTV10CB50	TE-1155
C11	5	15V		MCD-50	EP15-5	WBR5-50	MT1-3	MTV5CB50	TE-1152
C12	1	15V		MCD-10		WBR1-50	MT1-1	MTV1CB50	TE-1148
C13	5	15V		MCD-50	EP15-5	WBR5-50	MT1-3	MTV5CB50	TE-1152
C14	1	15V		MCD-10		WBR1-50	MT1-1	MTV1CB50	TE-1148
C15	100	15V		MCD-180	EP15-100	WBR100-16	MT1-19	MTV100CF15	TE-1162
C16	100	15V		MCD-180	EP15-100	WBR100-16	MT1-19	MTV100CF15	TE-1162
C17	30	15V		MCD-110	EP15-25	WBR35-50	MT1-13.5	MTV30CB25	TE-1158
C18	1	15V		MCD-10		WBR1-50	MT1-1	MTV1CB50	TE-1148
C19	100	15V		MCD-180	EP15-100	WBR100-16	MT1-19	MTV100CF15	TE-1162
C20	30	15V		MCD-110	EP15-25	WBR35-50	MT1-13.5	MTV30CB25	TE-1158
C21	5	15V		MCD-50	EP15-5	WBR5-50	MT1-3	MTV5CB50	TE-1152
C22	100	15V		MCD-180	EP15-100	WBR100-16	MT1-19	MTV100CF15	TE-1162

CAPACITORS

ITEM No.	RATING			REMARKS	REPLACEMENT DATA					
					AEROVOX PART No.	CENTRALAB PART No.	CORNELL-DUBILIER PART No.	ELMENCO PART No.	MALLORY PART No.	SPRAGUE PART No.
C29	100		5%		ADM-15-101	CPR-100J	CD15FD101J03	DM-15-101J	SX310	MS-31
C30	.005				TTP-005	CK-502	MGP005	CCD-502	TA250	TG-D50
C31	33				NPO-DI 33	DTZ-33	NP033	CCTO-330	CN0433	10TCC-Q33
C32	50		10%		NPO-DI 50	DTZ-50	NP050	CCTO-510	CN0450	10TCC-Q50
C33	.001				GPD X5F102K	DM-102	GP1000	CCD-102	SM210	2SS-D10
C34	.001				GPD X5F102K	DM-102	GP1000	CCD-102	SM210	2SS-D10
C35	.01				TTP-01	CK-103	MGP01	CCD-103	TA110	TG-S10
C36	.001				GPD X5F102K	DM-102	GP1000	CCD-102	SM210	2SS-D10
C37	.001				GPD X5F102K	DM-102	GP1000	CCD-102	SM210	2SS-D10
C38	.001				GPD X5F102K	DM-102	GP1000	CCD-102	SM210	2SS-D10
C39	.001				GPD X5F102K	DM-102	GP1000	CCD-102	SM210	2SS-D10
C40	12		5%		ADM-15-120			DM-15-120J	SX412	MS-412
C41	2.7-20									
C42	2.7-20									
C43	2.7-20									
C44	.002				GPD X5F202K	DD-202	GP2000	CCD-202	GP220	10TS-D20
C45	43		5%		ADM-15-430	CPR-43J	CD15ED430J03	DM-15-430J	SX443	MS-443
C46	15	500V	5%		ADM-15-150			DM-15-150J	SX415	MS-415
C47	15	N750	5%			DTN-15	N15		CN7415	10TCU-015
C48	22		5%		ADM-15-220	CPR-22J		DM-15-220J	SX422	MS-422
C49	680				GPD X5F681K	DD-681	GP680	CCD-681	GP368	10TS-T68
C50	22		5%		ADM-15-220	CPR-22J	CD15ED220J03	DM-15-220J	SX422	MS-422
C51	10	NPO			NPO-DI 10	DTZ-10	NP010	CCTO-100	CN0410	10TCC-Q10
C52	12		5%		ADM-15-120			DM-15-120J	SX412	MS-412
C53	.002				GPD X5F202K	DM-202	GP2000	CCD-202	GP220	2SS-D20
C54	12		5%		ADM-15-120			DM-15-120J	SX412	MS-412
C55	.005				TTP-005	CK-502	MGP005	CCD-502	TA250	TG-D50
C56	68		5%		ADM-15-680	CPR-68J	CD15ED680J03	DM-15-680J	SX468	MS-468
C58	12		5%		ADM-15-120			DM-15-120J	SX412	MS-412
C59	2	NPO			NPO-DI 2.2	DTZ-2R2	NP02P2		CN0522	10TCC-V22
C60	3-12									
C61	15	N750	5%			DTN-15	N15		CN7415	10TCU-015
C62	51		5%		ADM-15-510		CD15ED510J03	DM-15-510J		MS-451
C63	51		5%		ADM-15-510		CD15ED510J03	DM-15-510J		MS-451
C64	430		5%		ADM-15-431	CPR-430J	CD15FD431J03	DM-16-431J	SX343	MS-343
C65	.005				TTP-005	CK-502	MGP005	CCD-502	TA250	TG-D50
C66	430		5%		ADM-15-431	CPR-430J	CD15FD431J03	DM-16-431J	SX343	MS-343
C67	5		10%		NPO-DI 5.0		NP05			10TCC-V50
C68	.047				TTP-05	CK-503	MGP05	CCD-503	TA150	TGL-S50
C69	.01				TTP-01	CK-103	MGP01	CCD-103	TA110	TG-S10
C70	100		5%		ADM-15-101	CPR-100J	CD15FD101J03	DM-15-101J	SX310	MS-31
C71	160	500V	5%		ADM-15-161	CPR-160J		DM-15-161J	SX316	MS-316
C72	130		5%		ADM-15-131	CPR-130J		DM-15-131J	SX313	MS-313
C73	.1				TTP-1	CK-104			TA010	TG-P10
C74	.01				TTP-01	CK-103	MGP01	CCD-103	TA110	TG-S10
C75	.01				TTP-01	CK-103	MGP01	CCD-103	TA110	TG-S10
C76	22		5%		ADM-15-220	CPR-22J	CD15ED220J03	DM-15-220J	SX422	MS-422
C77	5				ADM-15-050		CD15CD050D03	DM-15-050J	SX550	MS-55
C78	12		5%		ADM-15-120			DM-15-120J	SX412	MS-412
C79	.01				TTP-01	CK-103	MGP01	CCD-103	TA110	TG-S10
C80	2	NPO			NPO-DI 2.2	DTZ-2R2	NP02P2		CN0522	10TCC-V22
C81	330		5%		ADM-15-331	CPR-330J	CD15FD331J03	DM-15-331J	SX333	MS-333
C82	15	N750	5%			DTN-15	N15		CN7415	10TCU-015
C83	.02				TTP-02	CK-203	MGP02	CCD-203	TA120	TG-S20
C84	270		5%		ADM-15-271	CPR-270J	CD15FD271J03	DM-15-271J	SX327	MS-327
C85	.01				TTP-01	CK-103	MGP01	CCD-103	TA110	TG-S10
C86	.01				TTP-01	CK-103	MGP01	CCD-103	TA110	TG-S10
C87	2.7-20									
C88	130		5%		ADM-15-131	CPR-130J		DM-15-131J	SX313	MS-313
C89	43		5%		ADM-15-430	CPR-43J	CD15ED430J03	DM-15-430J	SX443	MS-443
C90	.001				GPD X5F102K	DD-102	GP1000	CCD-102	GP210	10TS-D10

PARTS LIST AND DESCRIPTION (CONTINUED)

(When ordering parts, state Model, Part Number, and Description.)

CAPACITORS (cont)

ITEM No.	RATING	REMARKS	REPLACEMENT DATA					
			AEROVOX PART No.	CENTRALAB PART No.	CORNELL-DUBILIER PART No.	ELMENCO PART No.	MALLORY PART No.	SPRAGUE PART No.
C91	.01		TTP-01	CK-103	MGP01	CCD-103	TA110	TG-S10
C92	430 5%		ADM-15-431	CPR-430J	CD15FD431J03	DM-16-431J	SX343	MS-343
C93	2 NPO		NPO-DI 2.2	DTZ-2R2	NP02P2		CN0522	10TCC-V22
C94	.047		TTP-05	CK-503	MGP05	CCD-503	TA150	TGL-S50
C95	.001		GPD X5F102K	DM-102	GP1000	CCD-102	SM210	2SS-D10
C96	.001		GPD X5F102K	DM-102	GP1000	CCD-102	SM210	2SS-D10
C97	.001		GPD X5F102K	DM-102	GP1000	CCD-102	SM210	2SS-D10
C98	.047		TTP-05	CK-503	MGP05	CCD-503	TA150	TGL-S50
C99	.002		GPD X5F202K	DM-202	GP2000	CCD-202	GP220	2SS-D20
C100	.01		TTP-01	CK-103	MGP01	CCD-103	TA110	TG-S10
C101	.047		TTP-05	CK-503	MGP05	CCD-503	TA150	TGL-S50
C102	.047		TTP-05	CK-503	MGP05	CCD-503	TA150	TGL-S50
C103	.1		TTP-1	CK-104			TA010	TG-P10
C104	.1		TTP-1	CK-104			TA010	TG-P10
C105	.01		TTP-01	CK-103	MGP01	CCD-103	TA110	TG-S10
C106	.002		GPD X5F202K	DM-202	GP2000	CCD-202	GP220	2SS-D20
C107	.01		TTP-01	CK-103	MGP01	CCD-103	TA110	TG-S10
C108	.01		TTP-01	CK-103	MGP01	CCD-103	TA110	TG-S10
C109	.002		GPD X5F202K	DM-202	GP2000	CCD-202	GP220	2SS-D20
C110	.047		TTP-05	CK-503	MGP05	CCD-503	TA150	TGL-S50
C111	.068							
C112	100 5%		ADM-15-101	CPR-100J	CD15FD101J03	DM-15-101J	SX310	MS-31
C113	.01		TTP-01	CK-103	MGP01	CCD-103	TA110	TG-S10
C114	.002		GPD X5F102K	DM-102	GP1000	CCD-102	SM210	2SS-D10
C115	.001		GPD X5F102K	DM-102	GP1000	CCD-102	SM210	2SS-D10
C116	.001		GPD X5F102K	DM-102	GP1000	CCD-102	SM210	2SS-D10
C117	.082							
C118	.1		TTP-1	CK-104			TA010	TG-P10
C119	15 5%		ADM-15-150			DM-15-150J	SX415	MS-415
C120	2.7-20							
C121	12 5%		ADM-15-120			DM-15-120J	SX412	MS-412
C122	.005		TTP-005	CK-502	MGP005	CCD-502	TA250	TG-D50
C123	270 5%		ADM-15-271	CPR-270J	CD15FD271J03	DM-15-271J	SX327	MS-327
C124	.001		GPD X5F102K	DM-102	GP1000	CCD-102	SM210	2SS-D10
C125	.01		TTP-01	CK-103	MGP01	CCD-103	TA110	TG-S10
C126	.001		GPD X5F102K	DM-102	GP1000	CCD-102	SM210	2SS-D10
C127	22 5%		ADM-15-220	CPR-22J	CD15ED220J03	DM-15-220J	SX422	MS-422
C128	2.7-20							
C129	390		ADM-15-391	CPR-390J	CD15FD391J03	DM-15-391J	SX339	MS-339
C130	.002		GPD X5F202K	DM-202	GP2000	CCD-202	GP220	2SS-D20
C131	.002		GPD X5F202K	DM-202	GP2000	CCD-202	GP220	2SS-D20
C132	43 5%		ADM-15-430	CPR-43J	CD15ED430J03	DM-15-430J	SX443	MS-443
C133	.001		GPD X5F102K	DM-102	GP1000	CCD-102	SM210	2SS-D10
C134	.002		GPD X5F202K	DM-202	GP2000	CCD-202	GP220	2SS-D20
C135	5 10%		NPO-DI 5.0		NP05			10TCC-V50
C136	.001		GPD X5F102K	DM-102	GP1000	CCD-102	SM210	2SS-D10
C137	.002		GPD X5F202K	DM-202	GP2000	CCD-202	GP220	2SS-D20
C138	.002		GPD X5F202K	DM-202	GP2000	CCD-202	GP220	2SS-D20
C139	.01		TTP-01	CK-103	MGP01	CCD-103	TA110	TG-S10
C140	.02		TTP-02	CK-203	MGP02	CCD-203	TA120	TG-S20
C141	.01		TTP-01	CK-103	MGP01	CCD-103	TA110	TG-S10
C142	.002		GPD X5F202K	DM-202	GP2000	CCD-202	GP220	2SS-D20
C143	.002		GPD X5F202K	DM-202	GP2000	CCD-202	GP220	2SS-D20
C144	82 5%		ADM-15-820	CPR-82J	CD15ED820J03	DM-15-820J	SX482	MS-482
C145	.002		GPD X5F202K	DM-202	GP2000	CCD-202	GP220	2SS-D20
C146	.002		GPD X5F202K	DM-202	GP2000	CCD-202	GP220	2SS-D20
C147	.01		TTP-01	CK-103	MGP01	CCD-103	TA110	TG-S10
C148	330 5%		ADM-15-331	CPR-330J	CD15FD331J03	DM-15-331J	SX333	MS-333
C149	.002		GPD X5F202K	DM-202	GP2000	CCD-202	GP220	2SS-D20
C150	.082							
C151	130 5%		ADM-15-131	CPR-130J		DM-15-131	SX313	MS-313
C152	.002		GPD X5F202K	DM-202	GP2000	CCD-202	GP220	2SS-D20
C153	.1		TTP-1	CK-104			TA010	TG-P10
C154	.002		GPD X5F202K	DM-202	GP2000	CCD-202	GP220	2SS-D20
C155	15 500V 5%		ADM-15-150			DM-15-150J	SX415	MS-415
C156	130 5%		ADM-15-131	CPR-130J		DM-15-131J	SX313	MS-313
C158	.005		TTP-005	CK-502	MGP005	CCD-502	TA250	TG-D50
C159	8-50							
C160	.005		TTP-005	CK-502	MGP005	CCD-502	TA250	TG-D50
C161	.005		TTP-005	CK-502	MGP005	CCD-502	TA250	TG-D50
C162	10		NPO-DI 10	DTZ-10	NP010	CCTO-100	CN0410	10TCC-Q10
C163	.001		GPD X5F102K	DM-102	GP1000	CCD-102	SM210	2SS-D10
C164	160 5%		ADM-15-161	CPR-160J		DM-15-161J	SX316	MS-316
C165	100 5%		ADM-15-101	CPR-100J	CD15FD101J03	DM-15-101J	SX310	MS-31
C166	82 5%		ADM-15-820	CPR-82J	CD15ED820J03	DM-15-820J	SX482	MS-482
C167a	.0047		GPD X5R502K	DD-502	GP5000	CCD-502	JF250	10TS-D50
b	.0047		GPD X5R502K	DD-502	GP5000	CCD-502	JF250	10TS-D50
C168	22 5%		ADM-15-220	CPR-22J	CD15ED220J03	DM-15-220J	SX422	MS-422
C169	.01		TTP-01	CK-103	MGP01	CCD-103	TA110	TG-S10
C170	.01		TTP-01	CK-103	MGP01	CCD-103	TA110	TG-S10
C171	.005		TTP-005	CK-502	MGP005	CCD-502	TA250	TG-D50
C172								

CONTROLS (All wattages 1/2 watt, or less, unless listed)

ITEM No.	FUNCTION	RESIST-ANCE	REPLACEMENT DATA				
			MFGR. PART No.	CENTRALAB PART No.	CLAROSTAT PART No.	CTS—IRC PART No.	MALLORY PART No.
R1	Volume/Switch	500K	A-0093-1 (LF4422)	F2-500K, SRS010, KR-1	A47-500K-Z, RS-2, SWE-12 or [NP-500K-Z, UP-A-400, NWE-12]	B13-123, SK3, 76-1 or [BU1, [BU1, CF25, SS3, GC]*	UA55A, SL2500, US41 or [RU55A, SL38, SL2500, US41] or [U48, US26]

PARTS LIST AND DESCRIPTION (CONTINUED)

(When ordering parts, state Model, Part Number, and Description.)

CONTROLS (All wattages 1/2 watt, or less, unless listed) (cont)

ITEM No.	FUNCTION	RESIST-ANCE	REPLACEMENT DATA				
			MFGR. PART No.	CENTRALAB PART No.	CLAROSTAT PART No.	CTS—IRC PART No.	MALLORY PART No.
R2	Squelch	1000	A-0133-8 (VA2817)	F1-1000, SRS010	A47-1000-S, RS-2 or [NP-1000-S, UP-A-400]	B11-108, SK3 or [BU1, CF6, SS3, DC1]*	US13L, SL2500 or [RU13L, SL38, SL2500] or U4
R3	Limiter/Switch	500K	A-0093-2 (LH5378)	F1-500K, SRS010, KR-1	A47-500K-S, RS-2, SWE-12 or [NP-500K-Z, UP-A-400, NWE-12]	B11-133, SK3, 76-1 or [BU1, CF16, SS3, GC]*	UA55L, SL2500, US41 or [RU55L, SL38, SL2500, US41] or [U50, US26]
R4	RF Gain/Switch	10K	A-0093-4 (UW9884)				
R5	Fine Tuning	2500	A-0221-3 (LF4424)	F1-2500, SRS010	A47-2500-S, RS-2 or [NP-2500-S, UP-A-400]	B11-111, SK3 or [BU1, CF59, SS3, DC1]*	UA33L, SL2500 or [RU252L, SL38, SL2500] or U8
R6	"S" Meter Zero	250	A-0221-1 (TL6388)	TSV-250 or T-300		X201R251B	MTC251L1
R7	"S" Meter Sensitivity	2500	A-0223-3 (TL6387)	TSV-2.5K or T-2500		X201R252B	MTC252L1
R8	Balance	250	A-0221-1 (TL6388)	TSV-250 or T-300		X201R251B	MTC251L1
R9	"SB" Adjust	2500	A-0133-1 (TL6387)	TSV-2.5K or T-2500		X201R252B	MTC252L1
R10	"SWR" Cal	2500	A-0314 (308440)	JC-252			
R11	Power Cal	1000	A-0221-2 (TS8858)	TSV-1K or T-1000		X201R102B	MTC13L1

* "SNAPTROL"

RESISTORS (Power and Special)

ITEM No.	RATING	REPLACEMENT DATA	
		WORKMAN PART No.	MFGR. PART No.
R165	7.5 (Cold)		

ITEM No.	RATING	REPLACEMENT DATA	
		WORKMAN PART No.	MFGR. PART No.

COILS (RF-IF)

ITEM No.	USE	REPLACEMENT DATA			
		PART No.	MEISSNER PART No.	MILLER PART No.	WORKMAN PART No.
L1	Antenna Matching	A-0237			
L2	RF Choke (15uh)	A-0095-7	19-2018	4624	T862
L3	RF Choke (2.7uh)	A-0095-6		74F276AP	T814
L4	RF	A-0313-123			
L5	RF Choke (5.6uh)	A-0095-3		74F566AP	T820
L6	RF Choke (5.6uh)	A-0095-3		74F566AP	T820
L7	RF Choke (1.5mh)	A-0095-8		4664	
L8	Mixer	A-0239			
L9	Rec. Oscillator (17uh)	A-0109	72F185AP		
L10	RF Choke (1.5mh)	A-0095-8		4664	
L11	RF Choke (2.2mh)	A-0095-5		4666	
L12	Input IF	A-0261			
L13	Output IF	A-0241			
L14	AGC IF	A-0241			
L15	BFO	A-0315			
L16	RF Choke (1.5mh)	A-0095-8		4664	
L17	RF Choke (5.6uh)	A-0095-3		74F566AP	T820
L18	RF Choke (1.5mh)	A-0095-8		4664	
L19	Balanced Modulator Output	A-0284-123			
L20	Xmtr Mixer	A-0313-123			
L21	Buffer	A-0259			
L22	Buffer	A-0257			
L23	RF Choke (2.7uh)	A-0095-6		74F276AP	T814
L24	RF Choke (15uh)	A-0095-7	19-2018	4624	T862
L25	Driver	A-0260			
L26	RF Choke (5.6uh)	A-0095-3		74F566AP	T820
L27	RF Choke (1uh)	A-0095-9	19-2009	4602	T855
L28	Final	A-0273			
L29	Pi Network	A-0127-3			
L30	RF Choke (.22uh)	A-0095-10	19-2003	4584	T957
L31	Pi Network	A-0311			
L32	RF Choke (15uh)	A-0095-7	19-2018	4624	T862
L33	RF Choke (5.6uh)	A-0095-3		74F566AP	T820
L34	RF Choke (1.5mh)	A-0095-8		4664	

TRANSFORMER (Power)

ITEM No.	RATING		REPLACEMENT DATA				NOTES
	PRI.	SEC. 1	MFGR. PART No.	STANCOR PART No.	THORDARSON PART No.	TRIAD PART No.	
T1	117VAC @ .55A	37VAC @.4A	A-0280				
	SEC. 2	SEC. 3					
	37VAC @.64A	8.6VAC @ 4ma tapped @ 6.8VAC @ 50ma					

PARTS LIST AND DESCRIPTION (CONTINUED)

(When ordering parts, state Model, Part Number, and Description.)

TRANSFORMER (Driver)

ITEM No.	TURNS RATIO			REPLACEMENT DATA				NOTES
	PRI.	SEC. 1	SEC. 2	MFGR. PART No.	STANCOR PART No.	THORDARSON PART No.	TRIAD Part No.	
T2	1.5	1 CT		A-0265				

TRANSFORMER (Audio Output)

ITEM No.	IMPEDANCE		REPLACEMENT DATA				NOTES
	PRI.	SEC. 1	MFGR. PART No.	STANCOR PART No.	THORDARSON PART No.	TRIAD PART No.	
T3	12.8 CT	4					
		SEC. 2					
		1.1 DC Resistance					

SPEAKER

ITEM No.	TYPE	REPLACEMENT DATA		NOTES
		MFGR. PART No.	QUAM PART No.	
SP1	4" x 6" PM, 4 ohms	A-0182	46C3	

FUSE DEVICES

ITEM No.	DESCRIPTION	REPLACEMENT DATA						
		PART No.		BUSS PART No.		LITTELFUSE PART No.		WORKMAN PART No.
		DEVICE	HOLDER	DEVICE	HOLDER	DEVICE	HOLDER	DEVICE
F1	1 Amp AGC			AGC 1	HJM	312001	342012A	FG1-2
F2	1 Amp AGC			AGC 1	3823-2	312001	357002	FG1-2
F3	1 Amp AGC			AGC 1	3823-2	312001	357002	FG1-2

MISCELLANEOUS

ITEM No.	PART NAME	PART No.	NOTES
K1	Relay	A-0285	
M1	Crystal, Xmit		20.710MC
M2	Crystal, Xmit		20.720MC
M3	Crystal, Xmit		20.730MC
M4	Crystal, Xmit		20.750MC
M5	Crystal, Xmit		20.760MC
M6	Crystal, Xmit		20.770MC
M7	Crystal, Xmit		20.780MC
M8	Crystal, Xmit		20.800MC
M9	Crystal, Xmit		20.810MC
M10	Crystal, Xmit		20.820MC
M11	Crystal, Xmit		20.830MC
M12	Crystal, Xmit		20.850MC
M13	Crystal, Xmit		20.860MC
M14	Crystal, Xmit		20.870MC
M15	Crystal, Xmit		20.880MC
M16	Crystal, Xmit		20.900MC
M17	Crystal, Xmit		20.910MC
M18	Crystal, Xmit		20.920MC
M19	Crystal, Xmit		20.930MC
M20	Crystal, Xmit		20.950MC
M21	Crystal, Xmit		20.960MC
M22	Crystal, Xmit		20.970MC
M23	Crystal, Xmit		21.000MC
M24	Crystal, Receive	A-0312	31.5MC
M25	Crystal, LSB	A-0195-2	6.2565MC
M26	Crystal, USB	A-0195-3	6.2535MC
M27	Crystal, AM	A-0195-123	6.255MC
S1	Switch, Selector	B-0320	
S2	Switch, Mode	A-0247-123	
S3	Switch, Meter	B-0292-123	
S4	Switch, Spot	A-0319	

MICROPHONE

ITEM No.	REPLACEMENT DATA			REMARKS
	MFGR. PART No.	RCA REPLACEMENT	RCA STEP UP REPLACEMENT	
M31		HK-113	HK-101	

WIRING DATA

General-use Hook-up Wire ..... Use BELDEN No. 8530 (Solid) Available in 12 Colors
8524 (Stranded) Available in 12 Colors
Shielded Antenna Lead ..... Use BELDEN No. 8214 Lowest-loss (RG-8/U Type)
8237 Low-loss (RG-8/U)
8240 (Solid) Miniature (RG-58/U)
8259 (Stranded) Miniature (RG-58A/U)
Coiled Microphone Cable ..... Use BELDEN No. 8497 3-Conductor,1 Shielded,for Press-to-Talk (Neoprene)
8496 3-Conductor,1 Shielded,for Press-to-Talk (Vinyl)
Ignition Noise Suppression ..... Use BELDEN No. 7300-Series Spark-Plug Sets
Bonding Strap ..... Use BELDEN No. 8661 (3/8 In.)