SAMS

PHOTOFACT®

CB RADIO SERIES

CB-8

8

AUGUST 1965

CONTENTS

HOWARD W. SAMS & CO., INC. Indianapolis 6, Indiana

TRADE NAME: E. C. I. Model Courier 23

SUPPLIER: For Current Address, see Master Index

TYPE SET: 10-Tube, 2-Transistor Transceiver

POWER SUPPLY: 110 — 120 Volts AC, 60 Cycles (or)
12 Volt Storage Battery

RATING: 63 Watts, .61 Amp. @ 117VAC (Trans.)
55 Watts, .54 Amp. @ 117VAC (Rec.)
5.6 Amp. @ 12.6VDC (Trans.)
4.8 Amp. @ 12.6VDC (Rec.)

TUNING RANGE: All 23 CB Channels

ALIGNMENT INSTRUCTIONS

Suggested Alignment Tools:
A1 thru A8, A11, A12, A18.....GENERAL CEMENT #8606, 8606L, 8869.....WALSCO #2543, 2544, 2588
A9, A10, A13 thru A17.....GENERAL CEMENT #8868, 9087, 9089.....WALSCO #2528, 2541, 2587

RECEIVER ALIGNMENT

Connect DC VTVM from point Ⓐ to chassis. Set to indicate negative voltage. Set Band Spread to mid-range.

SIGNAL GENERATOR	CHANNEL	ADJUST	REMARKS
High side thru .01mfd to pin 7 (grid) of V3 (Rec. Conv.), low side to chassis. Tune to 455KC (Unmod.).	Any	A1 thru A6	Adjust for maximum.
High side thru .01mfd to pin 9 (grid) of V1B (Rec. Mixer), low side to chassis. Tune to 6MC (Unmod.).	Any	A7, A8	Adjust for maximum.
High side to antenna receptacle, low side to chassis. Tune to 27.085MC (Unmod.).	11	A9 thru A12	Adjust for maximum.

TRANSMITTER ALIGNMENT

ONLY THOSE PERSONS PROPERLY LICENSED ARE PERMITTED TO MAKE REPAIRS OR ADJUSTMENTS WHICH MAY RESULT IN ILLEGAL OPERATION. (REFER TO FCC RULES AND REGULATIONS PART 95, SUBPART D, SECTION 95.95).

The frequency of the transmitter should be checked periodically with a secondary frequency standard to insure proper and legal operation.

Best results will be obtained when adjusting the final RF output circuit if the antenna normally used is connected and the chassis is as nearly in the cabinet as possible.

Connect either 50Ω dummy load or the normally used antenna system.

INDICATOR	ADJUST	REMARKS
Accurate Frequency Meter	A13	Adjust for proper frequency.
Field Strength Meter	A14 thru A17	Adjust for maximum. Repeat adjustment of A16 & A17 several times. Check each channel for approximately the same output. Readjustment of A9 and A10 for maximum output may be required.
Near-by TV Receiver	A18	Set TV to a low channel. Key Transmitter and adjust for MINIMUM interference.

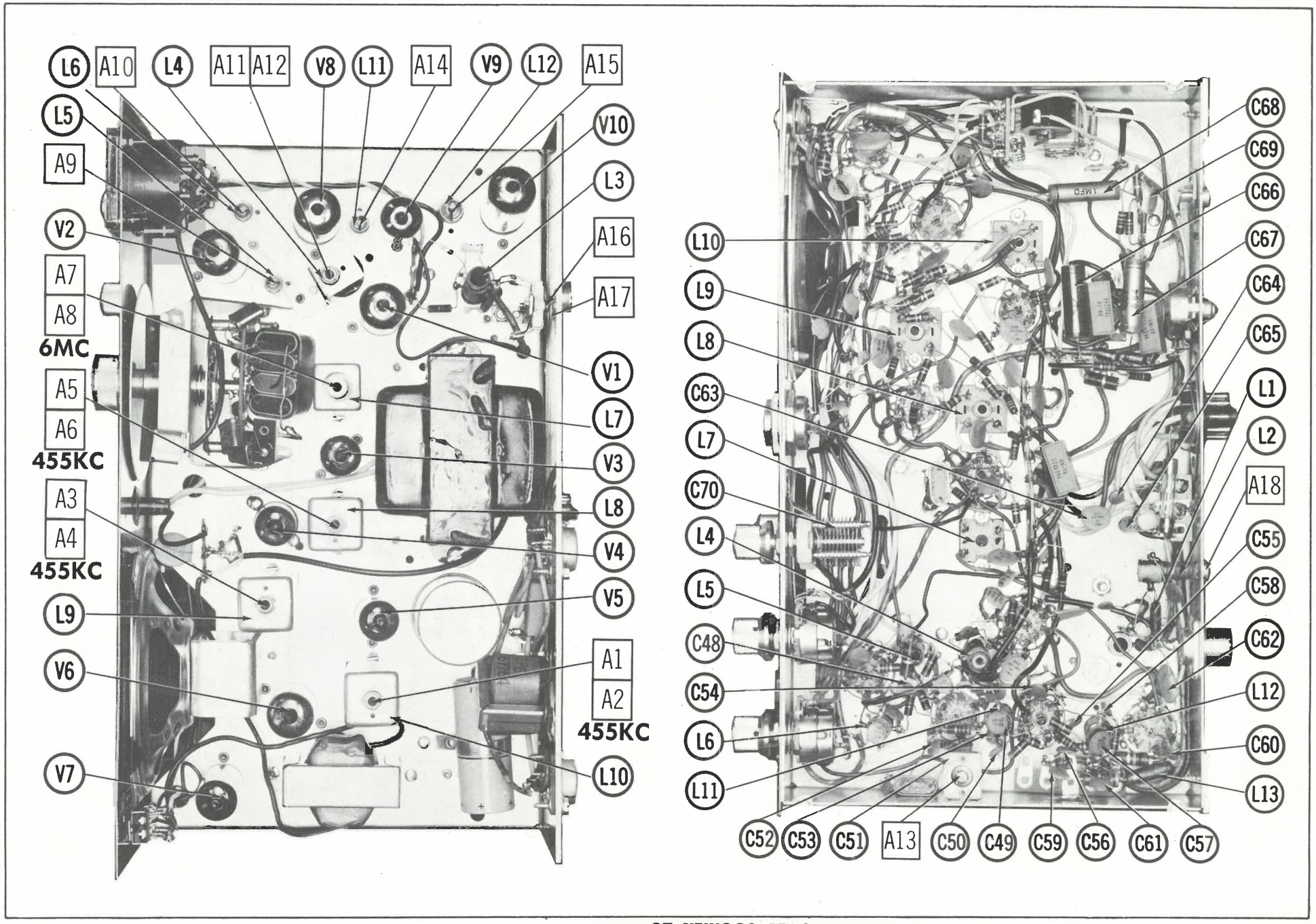
L6
A10
L4
A11
A12
V8
L11
A14
V9
L12
A15
L5
V10
A9
L3
V2
A16
A7
A17
A8
6MC
V1
A5
L7
A6
455KC
V3
A3
L8
A4
V4
455KC
V5
L9
A1
V6
A2
455KC
L10
V7
C68
C69
C66
L10
C67
L9
C64
L8
C65
C63
L1
L7
L2
C70
A18
L4
C55
L5
C58
C48
C62
C54
L12
L6
C60
L11
L13
C52
C53
C51
A13
C50
C49
C59
C56
C61
C57

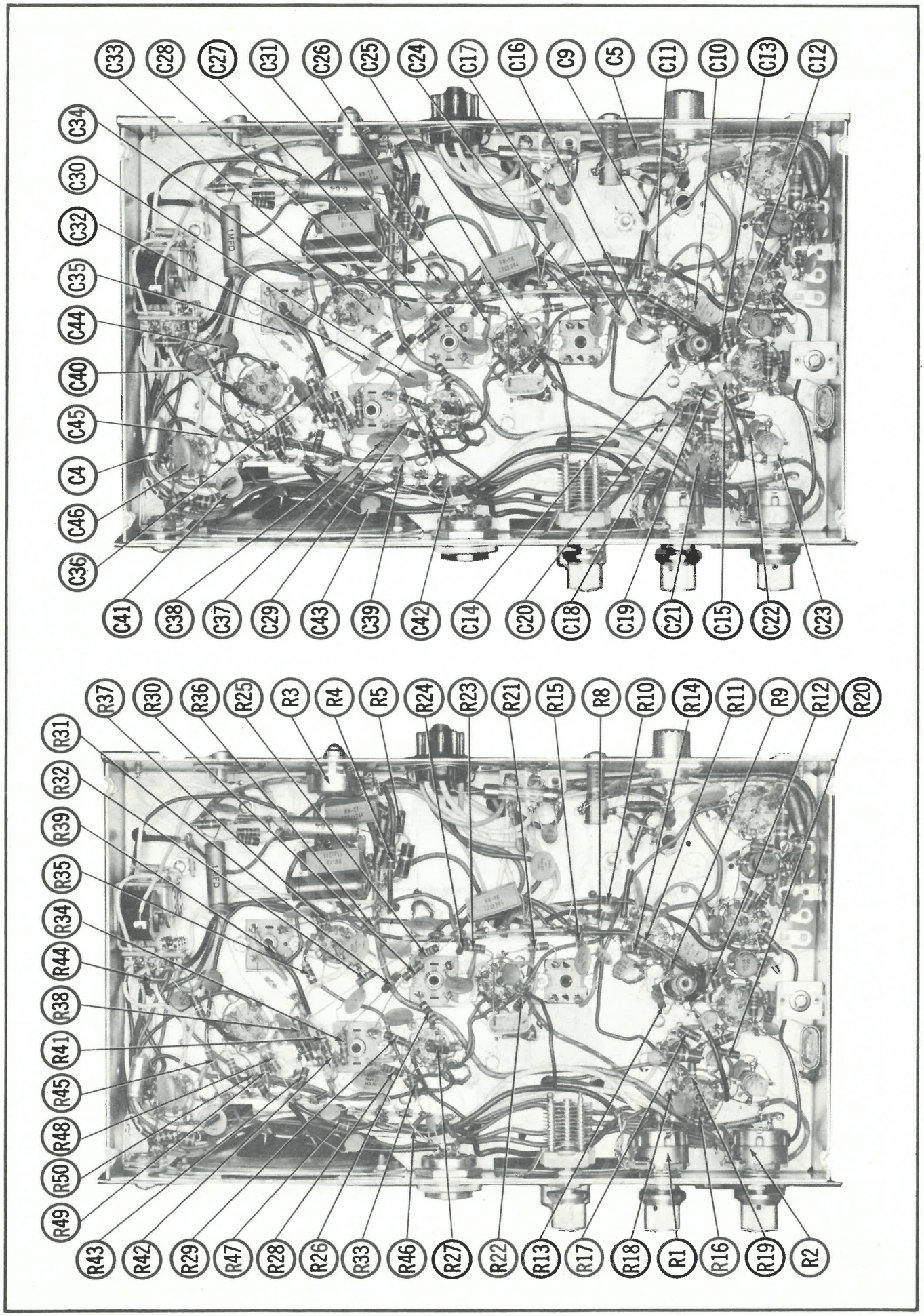
C33
C28
C27
C31
C26
C25
C24
C17
C16
C9
C5
C11
C10
C13
C12
C34
C30
C32
C35
C44
C40
C45
C4
C46
C36
C41
C38
C37
C29
C43
C39
C42
C14
C20
C18
C19
C21
C15
C22
C23
R37
R30
R36
R25
R3
R4
R5
R24
R23
R21
R15
R8
R10
R14
R11
R9
R12
R20
R31
R32
R39
R35
R34
R44
R38
R41
R45
R48
R50
R49
R43
R42
R29
R47
R28
R26
R33
R46
R27
R22
R13
R17
R18
R1
R16
R19
R2

X6
C6
R7
C8
C7
M7
M9
T1
X1
C2
R70
C3
R69
T2
X2
C1
R6
M13
R72
M6
M5
M4
M8
S1
M1
M3
M2
C47
M10
T3
S2

X5
R75
R76
R74
X3
X4
R73
R71
F1
R61
V9
R64
V10
R62
R67
R79
R78
R66
K1
V5
X7
R52
V6
V7
R54
R55
X9
R53
R51
X8
V4
V3
M11
R77
V2
V1
R56
V8
M12
R59
R57
R58
R60
R63
R68
R65

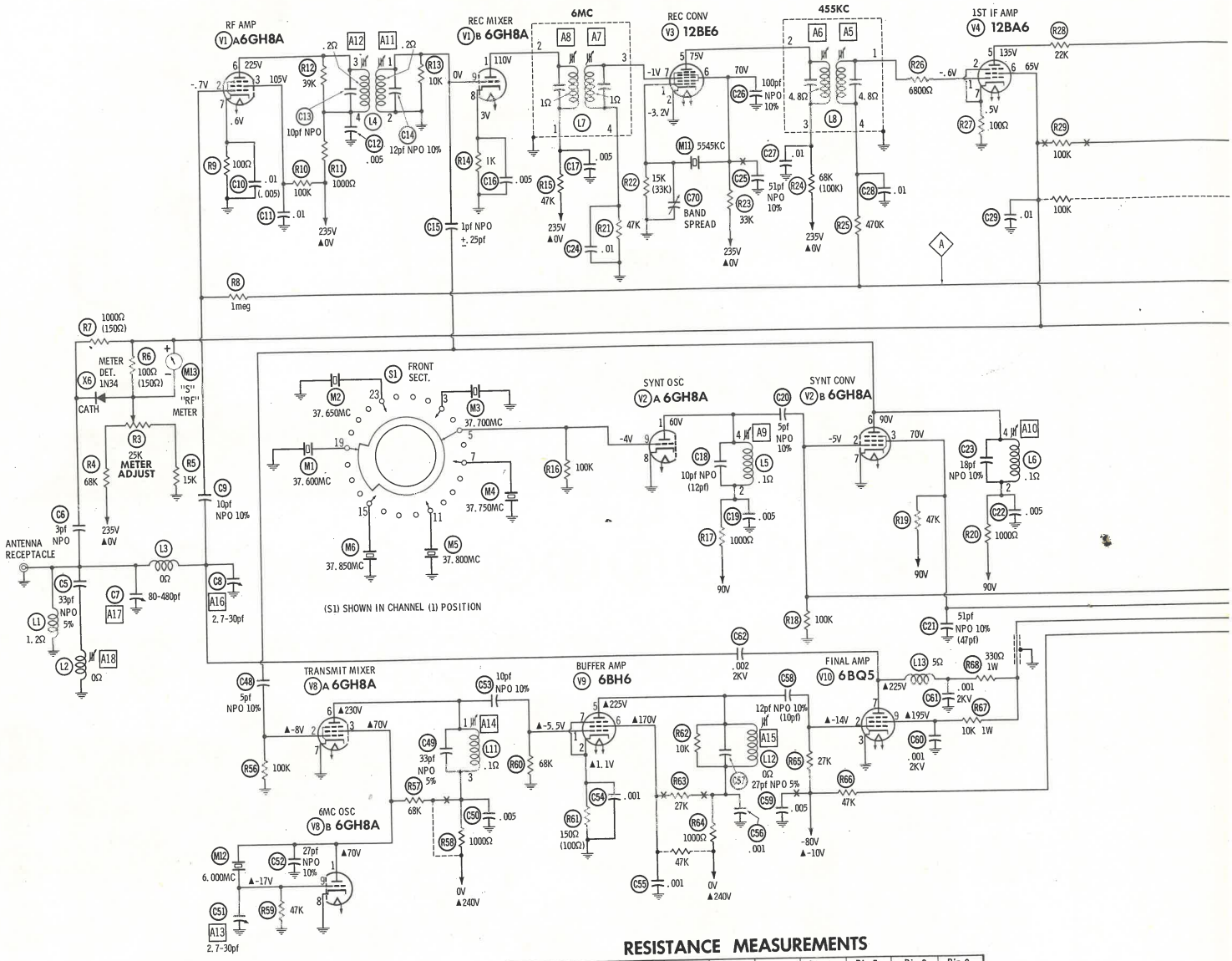

RESISTANCE MEASUREMENTS

ITEM	TUBE	Pin 1	Pin 2	Pin 3	Pin 4	Pin 5	Pin 6	Pin 7	Pin 8	Pin 9
V1	6GH8A	†48K	2.2meg	†100K	FIL	FIL	†2100Ω	100Ω	1000Ω	.2Ω
V2	6GH8A	†30K	100K	†75K	FIL	FIL	†30K	0Ω	0Ω	100K
V3	12BE6	15K	0Ω	FIL	FIL	†70K	†34K	47K		
V4	12BA6	1.5meg	100Ω	FIL	FIL	†26K	†30K	100Ω		
V5	12BA6	1.2meg	470Ω	FIL	FIL	†3300Ω	†100K	470Ω		
V6	6EU7	FIL	FIL	NC	0Ω	1.8meg	†100K	†480K	7meg	0Ω
V7	6AQ5A	470K	330Ω	FIL	FIL	†320Ω	†1100Ω	470K		
V8	6GH8A	†▲70K	100K	†▲70K	FIL	FIL	†▲2100Ω	0Ω	0Ω	47K
V9	6BH6	68K	150Ω	FIL	FIL	†▲2100Ω	†▲29K	150Ω		
V10	6BQ5	NC	▲75K	0Ω	FIL	FIL	NC	†700Ω	NC	†10K
ITEM	TUBE	Pin 1	Pin 2	Pin 3	Pin 4	Pin 5	Pin 6	Pin 7	Pin 8	Pin 9

ALL MEASUREMENTS MADE IN RECEIVE POSITION UNLESS OTHERWISE INDICATED.
▲ MADE IN TRANSMIT POSITION † MEASURED FROM CATHODE X4 NC ---NO CONNECTION

⊖ See parts list for alternate value or application.
1. Voltage measurements taken with vacuum tube voltmeter.
2. All controls set for normal operation, no signal applied.
3. Measured values are from socket pin or terminal to common ground.
4. All terminals viewed from bottom unless otherwise designated.
5. Numbers assigned to terminals may not be found on the unit.
6. Supply voltage maintained at rated value for voltage readings.

Resistors are 1/2 watt or less and rated 10% or 20% unless otherwise indicated.

A PHOTOFACT STANDARD NOTATION SCHEMATIC

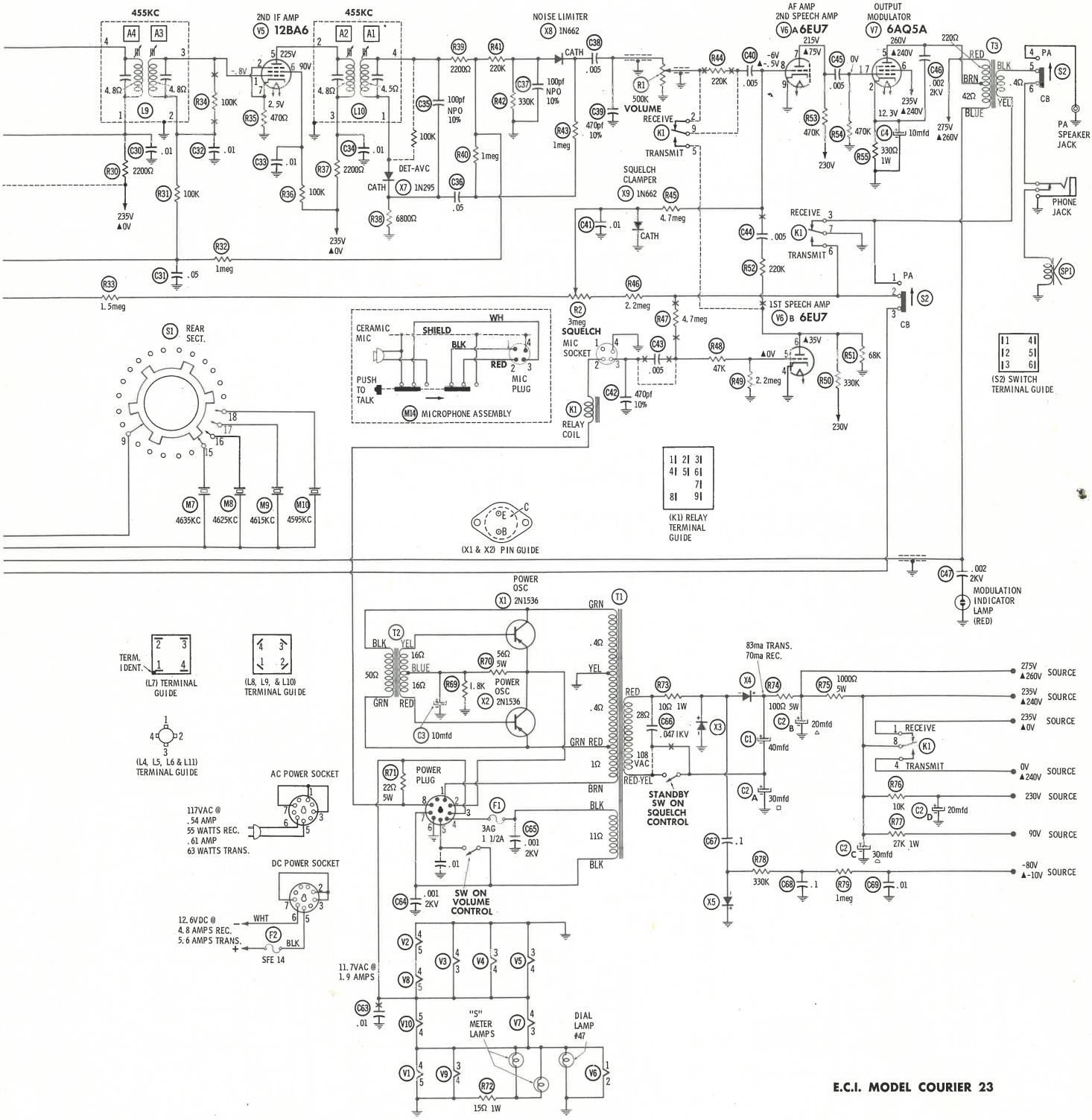

E.C.I. MODEL COURIER 23

PARTS LIST AND DESCRIPTION

WIRING DATA

General-use Hook-up Wire	Use BELDEN No.	8530 (Solid) Available in 12 Colors
		8524 (Stranded) Available in 12 Colors)
Shielded Antenna Lead	Use BELDEN No.	8214 Lowest Loss (RG-8/U Type)
		8237 Low Loss (RG-8/U)
		8240 (Solid) Miniature (RG-58/U)
		8259 (Stranded) Miniature (RG-58A/U)
Coiled Microphone Cable	Use BELDEN No.	8499 Single Conductor Shielded (Neoprene)
		8498 Single Conductor Shielded (Vinyl)
Ignition Noise Suppression	Use BELDEN No.	7300-Series Spark-Plug Sets
Bonding Strap	Use BELDEN No.	8661 (3/8 In.)

TUBES

◆ AMPEREX ◆ GENERAL ELECTRIC ◆ RCA ◆ SYLVANIA ◆

ITEM No.	USE	TYPE
V1	RF Amp.-Rec. Mixer	6GH8A
V2	Synthesizer Osc.-Synthesizer Conv.	6GH8A
V3	Receiver Converter	12BE6
V4	1st IF Amp.	12BA6
V5	2nd IF Amp.	12BA6
V6	AF Amp.-Speech Amp.	6EU7
V7	Output-Modulator	6AQ5A
V8	Transmit Mixer-6MC Osc.	6GH8A
V9	Buffer Amp.	6BH6
V10	Final Amp.	6BQ5

TRANSISTORS

ITEM No.	ORIG. TYPE	USE	REPLACEMENT DATA			NOTES
			DELCO PART No.	GENERAL ELECTRIC PART No.	RCA PART No.	
X1	2N1536	Power Osc.	DS-520	GE-3		PNP
X2	2N1536	Power Osc.	DS-520	GE-3		PNP

POWER RECTIFIERS & SIGNAL DIODES

ITEM No.	MEASURED CURRENT	ORIGINAL Part or Type No.	RECTIFIERS				DIODES
			GENERAL ELECTRIC PART No.	MALLORY PART No.	RCA PART No.	SARKES TARZIAN PART No.	GENERAL ELECTRIC PART No.
X3	.083A		1N1696 or 1N1697	A500 ①	1N2863 or 1N2864	50C or 50H	
X4	.083A		1N1696 or 1N1697	A500 ①	1N2863 or 1N2864	50C or 50H	
X5			1N1693	1N2069 or 1N602	1N3193 or 1N2860	F2 or 20H	
X6		1N34					1N34AS
X7		1N295					1N295
X8		1N662					
X9		1N662					

① Part #VB500 may be used to replace X3 and X4.

ELECTROLYTIC CAPACITORS

ITEM No.	RATING		REPLACEMENT DATA					
	CAP.	VOLT.	E.C.I. PART No.	AEROVOX PART No.	CORNELL-DUBILIER PART No.	GENERAL ELECTRIC PART No.	MALLORY PART No.	SPRAGUE PART No.
C1	40	350		PRS1670	BR40-350	QT1-16	TC67	TVA-1611
C2A	■30	450						
B	▲20	450						
C	▰30	450						
D	20	350						
C3	10	60		PRS1410	NLW10-100	MT1-7	TT100X10	TE-1407
C4	10	30		PTT130	NLW10-50	MT1-6	TT50X10	TE-1304

FIXED CAPACITORS

ITEM No.	RATING	REMARKS	REPLACEMENT DATA					
			AEROVOX PART No.	CENTRALAB PART No.	CORNELL-DUBILIER PART No.	ELMENCO PART No.	MALLORY PART No.	SPRAGUE PART No.
C5	33 NPO 5%			DTZ-33	C10Q33C		CNO433	10TCC-Q33
C6	3pf NPO 5%			TCZ-3R3	C10V33C		CNO533	10TCC-V30
C7	80-480					466		
C8	2.7-30pf					461		
C9	10pf NPO 10%		NPO-DI 10	DTZ-10	C10Q1C	CCTO-100	CNO410	10TCC-Q10
C10	.01	(.005) †	BPD-01	DD-103	BYA10S1	CCD-103	B110	5HK-S10
C11	.01		BPD-01	DD-103	BYA10S1	CCD-103	B110	5HK-S10
C12	.005		BPD-005	DD-502	BYA10D5	CCD-502	B250	5HK-D50
C13	10pf NPO		NPO-DI 10	DTZ-10	C10Q1C	CCTO-100	CNO410	10TCC-Q10
C14	12 NPO 10%		NPO-DI 10	TCZ-12	C10Q1C	CCTO-120	CNO412	10TCC-Q12
C15	1pf NPO ±.25pf			TCZ-1			CNO510	10TCC-V10
C16	.005		BPD-005	DD-502	BYA10D5	CCD-502	B250	5HK-D50
C17	.005		BPD-005	DD-502	BYA10D5	CCD-502	B250	5HK-D50
C18	10pf NPO	(12pf) †	NPO-DI 10	DTZ-10	C10Q1C	CCTO-100	CNO410	10TCC-Q10
C19	.005		BPD-005	DD-502	BYA10D5	CCD-502	B250	5HK-D50
C20	5pf NPO 10%		NPO-DI 5	DTZ-4R7	C10V47C	CCTO-050	CNO547	10TCC-V50
C21	51 NPO 10%	(47pf) †	NPO-DI 50	DTZ-51	C10Q5C	CCTO-510	CNO450	10TCC-Q50
C22	.005		BPD-005	DD-502	BYA10D5	CCD-502	B250	5HK-D50
C23	18 NPO 10%			TCZ-18		CCTO-180	CNO418	10TCC-Q18
C24	.01		BPD-01	DD-103	BYA10S1	CCD-103	B110	5HK-S10
C25	51 NPO 10%	①	NPO-DI 50	TCZ-51	C10Q5C	CCTO-510	CNO450	10TCC-Q50
C26	100 NPO 10%		NPO-DI 100	DTZ-100	C10T1C	CCTO-101	CNO310	10TCC-T10
C27	.01		BPD-01	DD-103	BYA10S1	CCD-103	B110	5HK-S10
C28	.01		BPD-01	DD-103	BYA10S1	CCD-103	B110	5HK-S10
C29	.01		BPD-01	DD-103	BYA10S1	CCD-103	B110	5HK-S10
C30	.01		BPD-01	DD-103	BYA10S1	CCD-103	B110	5HK-S10
C31	.05 75V		TTD-05	DDA-503			TA150	TH-S50
C32	.01		BPD-01	DD-103	BYA10S1	CCD-103	B110	5HK-S10
C33	.01		BPD-01	DD-103	BYA10S1	CCD-103	B110	5HK-S10
C34	.01		BPD-01	DD-103	BYA10S1	CCD-103	B110	5HK-S10
C35	100 NPO 10%		NPO-DI 100	DTZ-100	C10T1C	CCTO-101	CNO310	10TCC-T10
C36	.05 75V		TTD-05	DDA-503			TA150	TH-S50
C37	100 NPO 10%		NPO-DI 100	DTZ-100	C10T1C	CCTO-101	CNO310	10TCC-T10
C38	.005		BPD-005	DD-502	BYA10D5	CCD-502	B250	5HK-D50
C39	470 10%		DI-470	DD-471	JB6T47	CCD-471	GP347	10TS-T47
C40	.005		BPD-005	DD-502	BYA10D5	CCD-502	B250	5HK-D50
C41	.01		BPD-01	DD-103	BYA10S1	CCD-103	B110	5HK-S10
C42	470 10%		DI-470	DD-471	JB6T47	CCD-471	GP347	10TS-T47
C43	.005	①	BPD-005	DD-502	BYA10D5	CCD-502	B250	5HK-D50
C44	.005		BPD-005	DD-502	BYA10D5	CCD-502	B250	5HK-D50
C45	.005		BPD-005	DD-502	BYA10D5	CCD-502	B250	5HK-D50
C46	.002 2KV		HVD-30-2200	DD30-202	HVC20D2	3CCD-202	2HV222	30GA-D20
C47	.002 2KV		HVD-30-2200	DD30-202	HVC20D2	3CCD-202	2HV222	30GA-D20
C48	5pf NPO 10%		NPO-DI 5	DTZ-4R7	C10V47C	CCTO-050	CNO547	10TCC-V50
C49	33 NPO 5%			DTZ-33	C10Q33C		CNO433	10TCC-Q33
C50	.005		BPD-005	DD-502	BYA10D5	CCD-502	B250	5HK-D50
C51	2.7-30pf			461				
C52	27 NPO 10%		NPO-DI 25	TCZ-27	C10Q25C	CCTO-270	CNO427	10TCC-Q27
C53	10 NPO 10%		NPO-DI 10	DTZ-10	C10Q1C	CCTO-100	CNO410	10TCC-Q10
C54	.001		BPD-001	DD-102	BYA10D1	CCD-102	B210	5HK-D10
C55	.001		BPD-001	DD-102	BYA10D1	CCD-102	B210	5HK-D10
C56	.001		BPD-001	DD-102	BYA10D1	CCD-102	B210	5HK-D10
C57	27 NPO 5%			TCZ-27	C10Q25C		CNO427	10TCC-Q27
C58	12 NPO 10%	(10) †	NPO-DI 10	TCZ-12	C10Q1C	CCTO-120	CNO412	10TCC-Q12
C59	.005	①	BPD-005	DD-502	BYA10D5	CCD-502	B250	5HK-D50
C60	.001 2KV		HVD-30-1000	DD30-102	HVB20D1	3CCD-102	2HV210	30GA-D10
C61	.001 2KV		HVD-30-1000	DD30-102	HVB20D1	3CCD-102	2HV210	30GA-D10
C62	.002 2KV		HVD-30-2200	DD30-202	HVC20D2	3CCD-202	2HV222	30GA-D20
C63	.01	①	BPD-01	DD-103	BYA10S1	CCD-103	B110	5HK-S10
C64	.001 2KV		HVD-30-1000	DD30-102	HVB20D1	3CCD-102	2HV210	30GA-D10
C65	.001 2KV		HVD-30-1000	DD30-102	HVB20D1	3CCD-102	2HV210	30GA-D10
C66	.047 1000V		BE10S47		PKM10S47	16DP-5-473	GEM16147	10TM-S47
C67	.1 400V		P488N-1	DF-104	PM4P1	4DP-3-104	GEM401	4TM-P10
C68	.1 400V		P488N-1	DF-104	PM4P1	4DP-3-104	GEM401	4TM-P10
C69	.01		BPD-01	DD-103	BYA10S1	CCD-103	B110	5HK-S10
C70	(Band Spread)							

① Not used in some versions.
† Alternate Value.

PARTS LIST AND DESCRIPTION (CONTINUED)

CONTROLS

All wattages 1/2 watt, or less, unless otherwise listed.

ITEM No.	USE	RESIST-ANCE	REPLACEMENT DATA				
			E. C. I. PART No.	CENTRALAB PART No.	CLAROSTAT PART No.	CTS-IRC PART No.	MALLORY PART No.
R1	Volume & Power Sw.	500K		F2-500K, SRS012, KR-4, or (B-60-S)	A47-500K-Z, RS-2, SWE-13	Q13-133, 76-1, or (BU2, CF25, SS3, GC)*	UA55A, SL2500, US41 or (RU55A, SL38, SL2500, US41) or (U48, US26)
R2	Squelch & Stand-by Switch	3meg		F1-3meg, SRS012, KR-1, or (B-84, KR-1)	A47-3meg-S , RS-2, SWE-12	Q11-140, 76-1, or (BU2, CF21, SS5, GC)*	UA36L, SL2500, US41 or(RU36L, SL38, SL2500, US41) or (U59, US26)
R3	Meter Adjust	25K		TT-26 or (F1-25K①, SNK010)	B47-25K-S	B11-120, TM4, or (BU11, CF11, SS6)*	TA253L or (RU253L, SL37, SN1000) or(SU29①)

* "SNAPTROL"
① Enlarge Mtg. Hole

RESISTORS (Power and Special)

ITEM No.	RATING	REPLACEMENT DATA		
		IRC PART No.	WORKMAN PART No.	REMARKS
R70	56Ω 5W	PW5-50	5W-SQ-55	
R71	22Ω 5W	PW5-20	5W-SQ-22.5	

ITEM No.	RATING	REPLACEMENT DATA		
		IRC PART No.	WORKMAN PART No.	REMARKS
R74	100Ω 5W	PW5-100	5W-SQ-100	
R75	1000Ω 5W	PW5-1000	5W-SQ-1000	

COILS (RF-IF)

ITEM No.	USE	REPLACEMENT DATA					
		E. C. I. PART No.	MEISSNER PART No.	MERIT PART No.	MILLER PART No.	STANCOR PART No.	WORKMAN PART No.
L1	Ant. Filter (5.6uh)		19-2013		74F566AP	RTC-8519	T820
L2	54MC Trap Net						
L3	Final Plate						
L4	RF						
L5	Synthesizer Osc. Plate						
L6	Synthesizer Conv. Plate						
L7	1st IF (6MC)						
L8	2nd IF (455KC)						
L9	3rd IF (455KC)						
L10	4th IF (455KC)						
L11	Transmit Mixer Plate						
L12	Buffer Amp. Plate						
L13	RF Choke (30uh)				74F335A1		

TRANSFORMER (POWER)

ITEM No.	RATING			REPLACEMENT DATA					NOTES
	PRI. 1	SEC. 1	SEC. 2	E. C. I. PART No.	MERIT PART No.	STANCOR PART No.	THORDARSON PART No.	TRIAD PART No.	
T1	117VAC @ .61A *	108VAC @ .083A *	11.7V AC @ 1.9A						* Transmit
	PRI. 2	SEC. 1							
	15VCT @ 5.6A*	108VAC @ .083A*							

TRANSFORMER (DRIVER)

ITEM No.	TURNS RATIO		REPLACEMENT DATA					NOTES
	PRI.	SEC.	E. C. I. PART No.	MERIT PART No.	STANCOR PART No.	THORDARSON PART No.	TRIAD PART No.	
T2	1.2	1						

TRANSFORMER (AUDIO OUTPUT)

ITEM No.	IMPEDANCE		REPLACEMENT DATA					NOTES
	PRI.	SEC.	E. C. I. PART No.	MERIT PART No.	STANCOR PART No.	THORDARSON PART No.	TRIAD PART No.	
T3	8000Ω Tap @ 220Ω	3-4Ω						

SPEAKER

ITEM No.	TYPE	REPLACEMENT DATA		NOTES
		E. C. I. PART No.	QUAM PART No.	
SP1	4" PM 3-4Ω		4A05	

FUSES

ITEM No.	TYPE	RATING	REPLACEMENT DATA					
			E. C. I. PART No.		LITTELFUSE PART No.		BUSS PART No.	
			FUSE	HOLDER	FUSE	HOLDER	FUSE	HOLDER
F1	3AG	1 1/2A 250V			31801.5		GJV 1 1/2	
F2	SFE14	14A 32V			307014	155014	SFE-14	HHI-B

MISCELLANEOUS

ITEM No.	PART NAME	E. C. I. PART No.	NOTES
K1	Transmit-Receive Relay		2PDT. Some versions may use 3PDT.
M1	Crystal (37.600MC)		
M2	Crystal (37.650MC)		
M3	Crystal (37.700MC)		
M4	Crystal (37.750MC)		
M5	Crystal (37.800MC)		
M6	Crystal (37.850MC)		
M7	Crystal (4635KC)		
M8	Crystal (4625KC)		
M9	Crystal (4615KC)		
M10	Crystal (4695KC)		
M11	Rec. Conv. Crystal (5545KC)		
M12	6MC Osc. Crystal		
M13	S Meter		
M14	Microphone Assembly		Ceramic
S1	Ch. Selector Switch		24-Position Rotary
S2	CB-PA Switch		DPDT Slide

TRADE NAME: Knight Model KN-2565 (86SX568)

SUPPLIER: For Current Address, see Master Index

TYPE SET: 10-Tube, 2-Transistor Transceiver

POWER SUPPLY: 110 – 120 Volts AC, 60 Cycles (or)
12-Volt Storage Battery

RATING: 80 Watts, .73 Amp. @ 117VAC (Trans.)
70 Watts, .66 Amp. @ 117VAC (Rec.)
6.8 Amp. @ 12.6VDC (Trans.)
6.0 Amp. @ 12.6VDC (Rec.)

TUNING RANGE: All 23 CB Channels

ALIGNMENT INSTRUCTIONS

Suggested Alignment Tools:
A1 thru A6, A8, A13 thru A16, A18 thru A20, A23...GENERAL CEMENT #8606, 8606L, 8869...WALSCO #2543, 2544, 2588
A7.....GENERAL CEMENT #8606.....WALSCO #2501
A9 thru A12, A17, A21, A22.....GENERAL CEMENT #8868, 9087, 9089.....WALSCO #2528, 2541, 2587

RECEIVER ALIGNMENT

Connect DC VTVM from point (A) to chassis. Set to indicate negative voltage.
Set Fine Tune to mid-range.

SIGNAL GENERATOR	CHANNEL	ADJUST	REMARKS
High side thru .01mfd to pin 7 (grid) of V3 (Rec. Conv.), low side to chassis. Tune to 475KC (Unmod.).	Any	A1 thru A6	Adjust for maximum.
High side thru .01mfd to pin 9(grid) of V1 (Rec. Mixer), low side to chassis. Tune to 7.5MC (Unmod.).	Any	A7, A8	Adjust for maximum.
Adjust A9 thru A12 for exact frequency with an accurate frequency determining device.			
High side to antenna receptacle, low side to chassis. Tune to 27.085MC (Unmod.).	11	A13 thru A16	Adjust for maximum.

TRANSMITTER ALIGNMENT

ONLY THOSE PERSONS PROPERLY LICENSED ARE PERMITTED TO MAKE REPAIRS OR ADJUSTMENTS WHICH MAY RESULT IN ILLEGAL OPERATION. (REFER TO FCC RULES AND REGULATIONS PART 95, SUBPART D, SECTION 95.95).

The frequency of the transmitter should be checked periodically with a secondary frequency standard to insure proper and legal operation.

Best results will be obtained when adjusting the final RF output circuit if the antenna normally used is connected and the chassis is as nearly in the cabinet as possible.

Connect either 50Ω dummy load or the normally used antenna system.

INDICATOR	ADJUST	REMARKS
Accurate Frequency Meter	A17	Adjust for correct Frequency.
Field Strength Meter	A18, A19	Adjust for maximum output. Check each channel for approximately same output. Readjust A18 and A19 if required.
"	A20, A21	Remove V8 (Trans. Osc.). Key Transmitter and adjust A20 throughout its range. If any deflection is noted on field strength meter while A20 is adjusted, adjust A21 until there is no deflection. Reinsert V8 and adjust A20 for maximum.
"	A22	Adjust for maximum. Repeat A20 adjustment if needed. A 22 should be adjusted when antenna system is used.
Nearby TV receiver tuned to Channel 2.	A23	Key Transmitter and adjust for MINIMUM interference.

HOWARD W. SAMS & CO., INC. Indianapolis 6, Indiana

 RY016

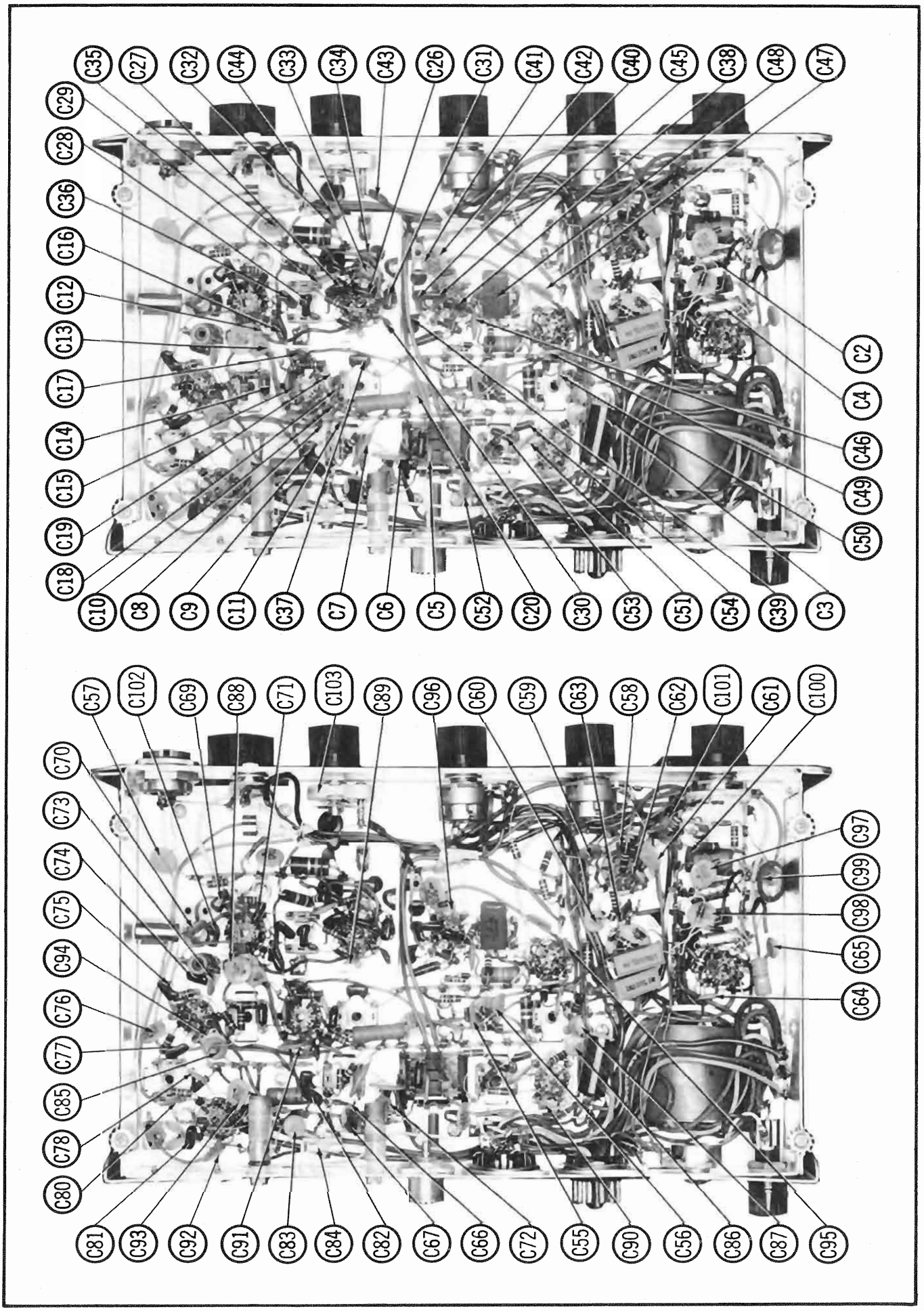
C35
C27
C32
C44
C33
C34
C43
C26
C31
C41
C42
C40
C45
C38
C48
C47
C29
C28
C36
C16
C12
C13
C17
C14
C15
C19
C18
C10
C8
C9
C11
C37
C7
C6
C5
C52
C20
C30
C53
C51
C54
C39
C3
C50
C49
C46
C4
C2
C57
C102
C69
C88
C71
C103
C89
C96
C60
C59
C63
C58
C62
C101
C61
C100
C70
C73
C74
C75
C94
C76
C77
C85
C78
C80
C81
C93
C92
C91
C83
C84
C82
C67
C66
C72
C55
C90
C56
C86
C87
C95
C97
C99
C98
C65
C64

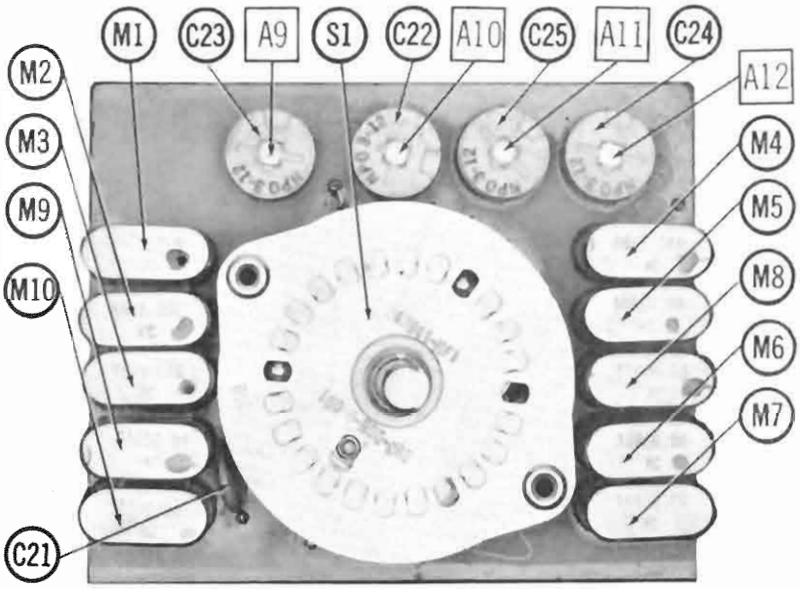

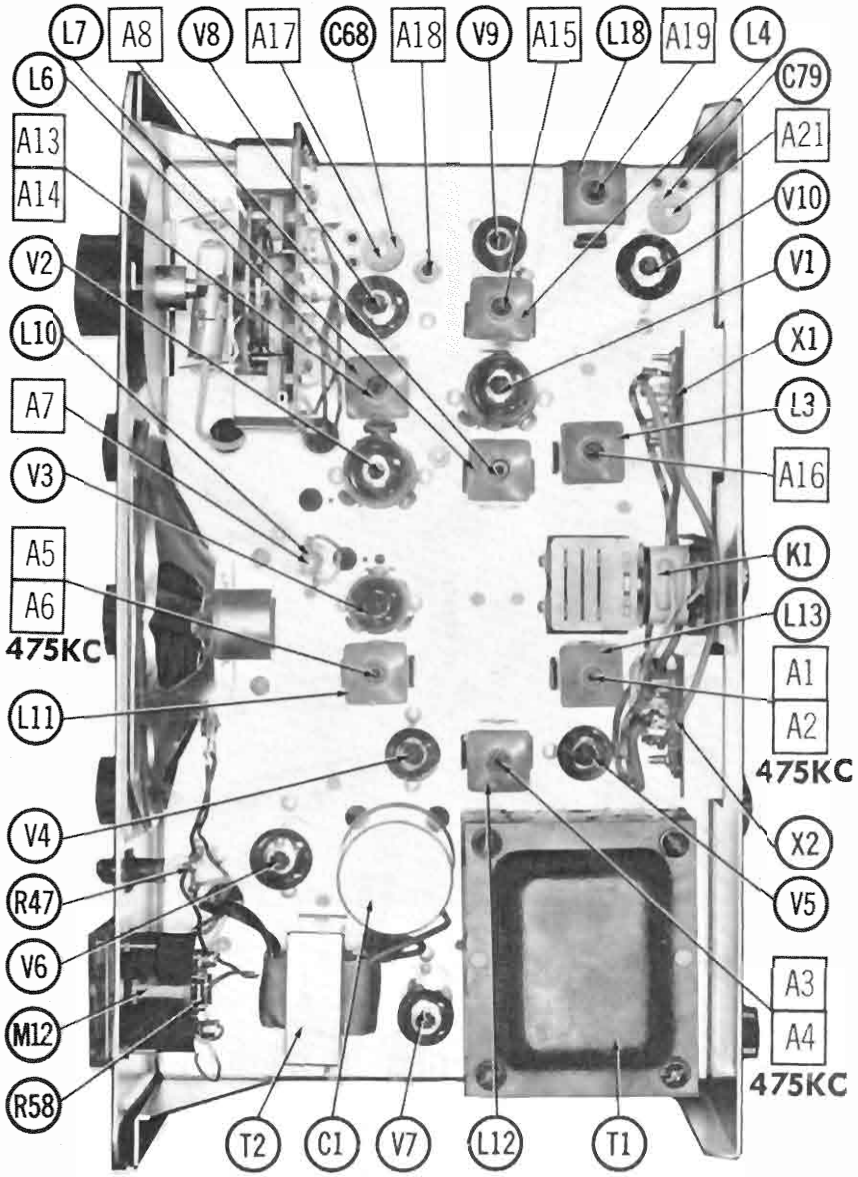

KNIGHT MODEL KN-2565 (86SX568)

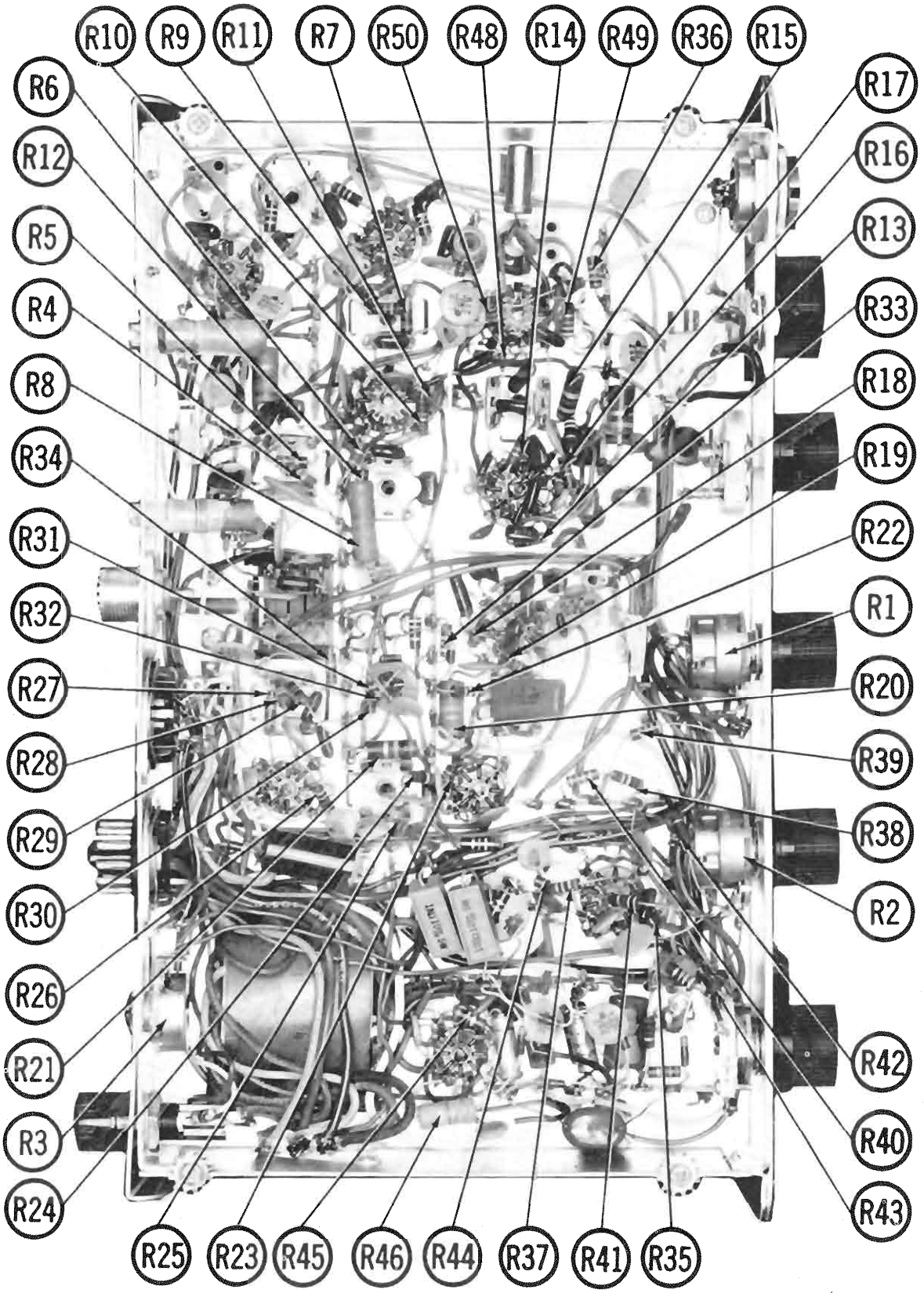
R10
R9
R11
R7
R50
R48
R14
R49
R36
R15
R6
R12
R5
R4
R8
R34
R31
R32
R27
R28
R29
R30
R26
R21
R3
R24
R25
R23
R45
R46
R44
R37
R41
R35
R17
R16
R13
R33
R18
R19
R22
R1
R20
R39
R38
R2
R42
R40
R43

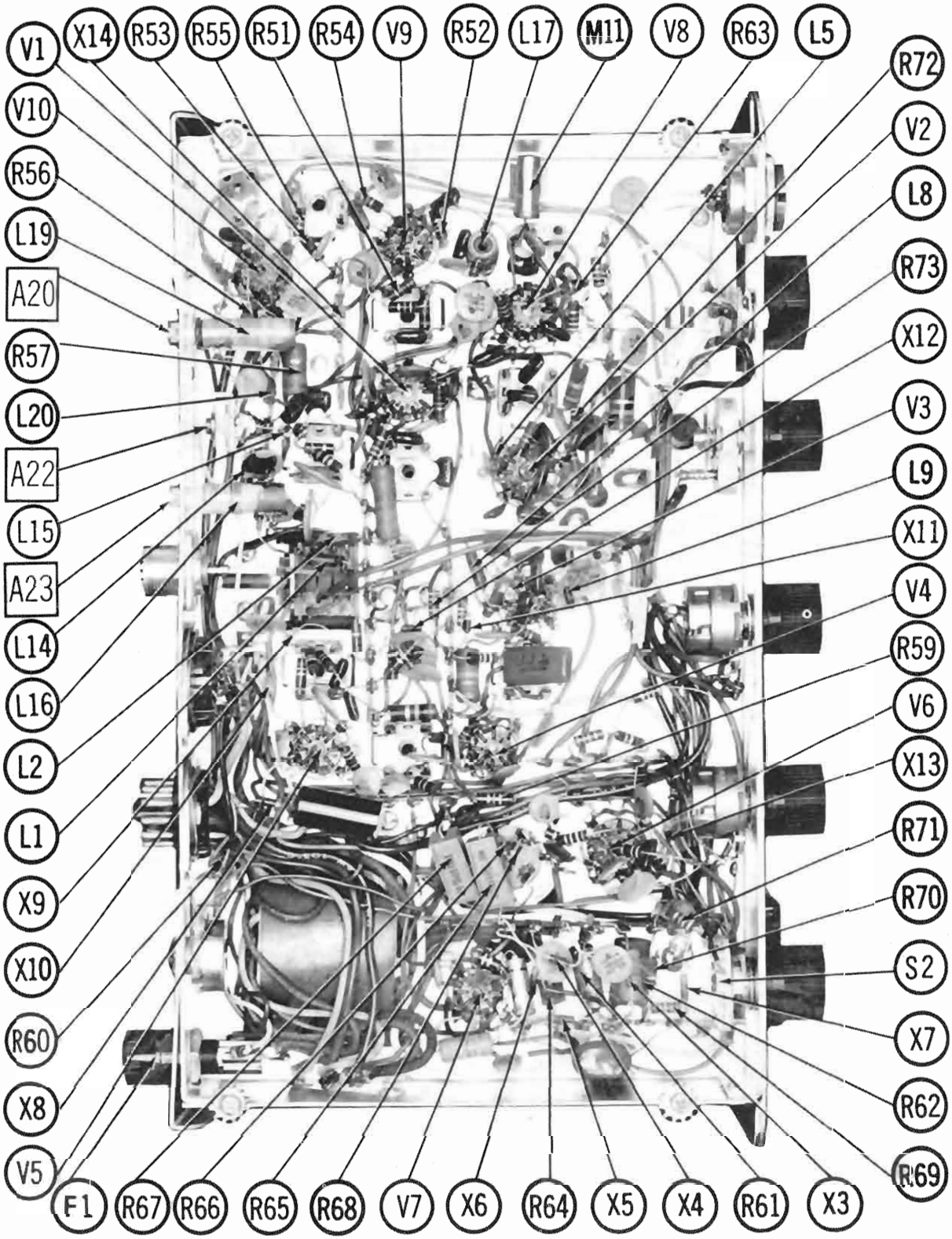
V1
X14
R53
R55
R51
R54
V9
R52
L17
M11
V8
R63
L5
R72
V10
V2
R56
L8
L19
R73
A20
X12
R57
V3
L20
L9
A22
X11
L15
V4
A23
R59
L14
V6
L16
X13
L2
R71
L1
R70
X9
S2
X10
X7
R60
R62
X8
R69
V5
F1
R67
R66
R65
R68
V7
X6
R64
X5
X4
R61
X3

PARTS LIST AND DESCRIPTION

WIRING DATA

General-use Hook-up Wire	Use BELDEN No.	8530 (Solid) Available in 12 Colors
		8524 (Stranded) Available in 12 Colors
Shielded Antenna Lead	Use BELDEN No.	8214 Lowest Loss (RG-8/U Type)
		8237 Low Loss (RG-8/U)
		8240 (Solid) Miniature (RG-58/U)
		8259 (Stranded) Miniature (RG-58A/U)
Coiled Microphone Cable	Use BELDEN No.	8497 3 Conductor-1 Shielded for Press-to-Talk (Neoprene)
		8496 3 Conductor-1 Shielded for Press-to-Talk (Vinyl)
Ignition Noise Suppression	Use BELDEN No.	7300-Series Spark-Plug Sets
Bonding Strap	Use BELDEN No.	8661 (3/8 in.)

TUBES

◆ AMPEREX ◆ GENERAL ELECTRIC ◆ RCA ◆ SYLVANIA ◆

ITEM No.	USE	TYPE	ITEM No.	USE	TYPE
V1	RF Amp.-Rec. Mixer	6EA8	V7	Output - Modulator	12AQ5
V2	Synt. Conv.-Synt. Osc.	6EA8	V8	Transmit Mixer - 7.5MC Osc.	6EA8
V3	Rec. Conv.	12BE6	V9	Buffer Amp.	6BA6
V4	1st IF Amp.	12BA6	V10	Final Amp.	6BQ5
V5	2nd IF Amp.	12BA6			
V6	1st AF Amp.-1st Speech Amp.-2nd AF Amp.-2nd Speech Amp.	12AX7A			

TRANSISTORS

ITEM No.	ORIG. TYPE	USE	REPLACEMENT DATA			NOTES
			DELCO PART No.	GENERAL ELECTRIC PART No.	RCA PART No.	
X1	2N456A (SP1137)	Power Osc.	DS-503		SK-3009	PNP
X2	2N456A (SP1137)	Power Osc.	DS-503		SK-3009	PNP

POWER RECTIFIERS & SIGNAL DIODES

ITEM No.	MEASURED CURRENT	ORIGINAL Part or Type No.	RECTIFIERS				DIODES
			GENERAL ELECTRIC PART No.	MALLORY PART No.	RCA PART No.	SARKES TARZIAN PART No.	GENERAL ELECTRIC PART No.
X3	120MA	SD-6	1N1697	1N1492 or 1N3195①	SK-3016 or SK-3017	F6	
X4	120MA	SD-6	1N1697	1N1492 or 1N3195①	SK-3016 or SK-3017	F6	
X5	120MA	SD-6	1N1697	1N1492 or 1N3195①	SK-3016 or SK-3017	F6	
X6	120MA	SD-6	1N1697	1N1492 or 1N3195①	SK-3016 or SK-3017	F6	
X7		SD-6	GE-504	1N2069 or 1N1488	SK-3016 or SK-3017	F2	
X8	250MA	SD-6	GE-504	1N2069 or 1N1488	SK-3016 or SK-3017	F2	
X9		1N729					
X10		1N48					1N34AS
X11							
X12		1N662					
X13							
X14		1N48					1N34AS

① Part #FW600 may be used to replace X3 thru X6.

ELECTROLYTIC CAPACITORS

ITEM No.	RATING		REPLACEMENT DATA					
	CAP.	VOLT.	KNIGHT PART No.	AEROVOX PART No.	CORNELL-DUBILIER PART No.	GENERAL ELECTRIC PART No.	MALLORY PART No.	SPRAGUE PART No.
C1A	▲30	450						
B	■30	450		AFH4-15-30		XC4-55	FP444.8	TVL-4769.4
C	▲20	450						
D	20	450						
C2	10	64		CRE907A	NLW10-100	MT1-7	TT100X10	TE-1407
C3	200	16		CRE481A	NLW200-15	MT1-23	TT15X200	TE-1164
C4	10	64		CRE907A	NLW10-100	MT1-7	TT100X10	TE-1407

FIXED CAPACITORS

ITEM No.	RATING	REMARKS	REPLACEMENT DATA					
			AEROVOX PART No.	CENTRALAB PART No.	CORNELL-DUBILIER PART No.	ELMENCO PART No.	MALLORY PART No.	SPRAGUE PART No.
C5	.01		BPD-01	DD-103	BYA10S1	CCD-103	B110	5HK-S10
C6	.01		BPD-01	DD-103	BYA10S1	CCD-103	B110	5HK-S10
C7	.05		BPD-05	DD-503		CCD-503	GP150	5HK-S50
C8	.001		BPD-001	DD-102	BYA10D1	CCD-102	B210	5HK-D10
C9	20 5%		ADM-15-200	CPR-20J	CD15E200J	DM-15-200J	SX420	MS-42
C10	.001		BPD-001	DD-102	BYA10D1	CCD-102	B210	5HK-D10
C11	.01		BPD-01	DD-103	BYA10S1	CCD-103	B110	5HK-S10
C12	.01		BPD-01	DD-103	BYA10S1	CCD-103	B110	5HK-S10
C13	.001		BPD-001	DD-102	BYA10D1	CCD-102	B210	5HK-D10
C14	10 5%	(20) †	ADM-15-100	DTZ-10	CD10C100J	DM-10-100J	SX410	MS-41
C15	.001		BPD-001	DD-102	BYA10D1	CCD-102	B210	5HK-D10
C16	5pf 5%		ADM-15-050			CM-20C-050J	SX550	MS-55
C17	.005		BPD-005	DD-502	BYA10D5	CCD-502	B250	5HK-D50
C18	160 5%		ADM-15-161	CPR-160J	CD15F161J	DM-15-161J	SX316	MS-316
C19	.005		BPD-005	DD-502	BYA10D5	CCD-502	B250	5HK-D50
C20	.01		BPD-01	DD-103	BYA10S1	CCD-103	B110	5HK-S10
C21	.001		BPD-001	DD-102	BYA10D1	CCD-102	B210	5HK-D10

PARTS LIST AND DESCRIPTION (CONTINUED)

FIXED CAPACITORS (cont)

ITEM No.	RATING	REMARKS	REPLACEMENT DATA					
			AEROVOX PART No.	CENTRALAB PART No.	CORNELL-DUBILIER PART No.	ELMENCO PART No.	MALLORY PART No.	SPRAGUE PART No.
C22	3-12pf NPO							
C23	3-12pf NPO							
C24	3-12pf NPO							
C25	3-12pf NPO							
C26	18 5%		ADM-15-180	TCZ-18	CD10C180J	DM-15-180J	SX418	MS-418
C27	68 5%		ADM-15-680	CPR-68J	CD15F680J	DM-15-680J	SX468	MS-468
C28	10 5%	Note 1	ADM-15-100	DTZ-10	CD10C100J	DM-10-100J	SX410	MS-41
C29	.01		BPD-01	DD-103	BYA10S1	CCD-103	B110	5HK-S10
C30	100 5%		ADM-15-101	CPR-100J	CD15F101J	DM-15-101J	SX310	MS-31
C31	5pf 5%		ADM-15-050			CM-20C-050J	SX550	MS-55
C32	.001		BPD-001	DD-102	BYA10D1	CCD-102	B210	5HK-D10
C33	6.8pf NPO 10%	(10pf)†	NPO-DI 6.8	DTZ-6R8	C10V68C	CCTO-6R8	CNO568	10TCC-V68
C34	150 5%		ADM-15-151	CPR-150J	CD25F151J	DM-15-151J	SX315	MS-315
C35	.01		BPD-01	DD-103	BYA10S1	CCD-103	B110	5HK-S10
C36	100 5%		ADM-15-101	CPR-100J	CD15F101J	DM-15-101J	SX310	MS-31
C37	12 5%		ADM-15-120	TCZ-12	CD10C120J	DM-15-120J	SX412	MS-412
C38	180 5%		ADM-15-181	CPR-180J	CD15F181J	DM-15-181J	SX318	MS-318
C39	68 5%		ADM-15-680	CPR-68J	CD15F680J	DM-15-680J	SX468	MS-468
C40	100 5%		ADM-15-101	CPR-100J	CD15F101J	DM-15-101J	SX310	MS-31
C41	22 N750 10%		N750-DI 22	DTN-22	C10Q22U	CCTN-220	CN7422	10TCU-Q22
C42	82 N750 5%	(75) †		TCN-82			CN7482	10TCU-Q82
C43	5pf 5%		ADM-15-050			CM-20C-050J	XX550	MS-55
C44	4.7pf NPO 5%	(6.8pf) †					CNO547	10TCC-V47
C45	100 5%		ADM-15-101	CPR-100J	CD15F101J	DM-15-101J	SX310	MS-31
C46	.01		BPD-01	DD-103	BYA10S1	CCD-103	B110	5HK-S10
C47	.01		BPD-01	DD-103	BYA10S1	CCD-103	B110	5HK-S10
C48	.1 400V		P488N-1	DF-104	PM4P1	4DP-3-104	GEM401	4TM-P10
C49	.01		BPD-01	DD-103	BYA10S1	CCD-103	B110	5HK-S10
C50	.01		BPD-01	DD-103	BYA10S1	CCD-103	B110	5HK-S10
C51	.01		BPD-01	DD-103	BYA10S1	CCD-103	B110	5HK-S10
C52	.01		BPD-01	DD-103	BYA10S1	CCD-103	B110	5HK-S10
C53	20		ADM-15-200	CPR-20J	CD15E200J	DM-15-200J	SX420	MS-42
C54	100 5%	(.001) †	ADM-15-101	CPR-100J	CD15F101J	DM-15-100J	SX310	MS-31
C55	.05	(.001) †	BPD-05	DD-503		CCD-503	GP150	5HK-S50
C56	.005		BPD-005	DD-502	BYA10D5	CCD-502	B250	5HK-D50
C57	.01		BPD-01	DD-103	BYA10S1	CCD-103	B110	5HK-S10
C58	100 5%		ADM-15-101	CPR-100J	CD15F101J	DM-15-101J	SX310	MS-31
C59	.003	(.01) †	DI-3000	DD-302	LA10D3-C4	CCD-302	GP230	5GA-D30
C60	.005		BPD-005	DD-502	BYA10D5	CCD-502	B250	5HK-D50
C61	.01		BPD-01	DD-103	BYA10S1	CCD-103	B110	5HK-S10
C62	.001	(.002) †	BPD-001	DD-102	BYA10D1	CCD-102	B210	5HK-D10
C63	.002	(.005) †	BPD-002	DD-202	BYA10D2	CCD-202	B220	5HK-D20
C64	.003 1KV		DI-3000	DD-302	LA10D3-C4	CCD-302	GP230	5GA-D30
C65	.002	(.005) †	BPD-002	DD-202	BYA10D2	CCD-202	B220	5HK-D20
C66	.01		BPD-01	DD-103	BYA10S1	CCD-103	B110	5HK-S10
C67	27 5%		ADM-15-270	CPR-27J	CD15E270J	DM-15-270J	SX427	MS-427
C68	5-25 NPO			827C				
C69	12 5%		ADM-15-120	TCZ-12	CD10C120J	DM-15-120J	SX412	MS-412
C70	.001		BPD-001	DD-102	BYA10D1	CCD-102	B210	5HK-D10
C71	27 5%		ADM-15-270	CPR-27J	CD25E270J	DM-15-270J	SX427	MS-427
C72	.001		BPD-001	DD-102	BYA10D1	CCD-102	B210	5HK-D10
C73	.005		BPD-005	DD-502	BYA10D5	CCD-502	B250	5HK-D50
C74	27 5%		ADM-15-270	CPR-27J	CD15E270J	DM-15-270J	SX427	MS-427
C75	100 5%		ADM-15-101	CPR-100J	CD15F101J	DM-15-101J	SX310	MS-31
C76	.01		BPD-01	DD-103	BYA10S1	CCD-103	B110	5HK-S10
C77	150 5%		ADM-15-151	CPR-150J	CD15F151J	DM-15-151J	SX315	MS-315
C78	.001		BPD-001	DD-102	BYA10D1	CCD-102	B210	5HK-D10
C79	1.5-7pf NPO							
C80	.005		BPD-005	DD-502	BYA10D5	CCD-502	B250	5HK-D50
C81	270 5%		ADM-15-271	CPR-270J	CD15F271J	DM-15-271J	SX327	MS-327
C82	270 5%		ADM-15-271	CPR-270J	CD15F271J	DM-15-271J	SX327	MS-327
C83	.001		BPD-001	DD-102	BYA10D1	CCD-102	B210	5HK-D10
C84	20-180					463		
C85	.001		BPD-001	DD-102	BYA10D1	CCD-102	B210	5HK-D10
C86	.001		BPD-001	DD-102	BYA10D1	CCD-102	B210	5HK-D10
C87	.001		BPD-001	DD-102	BYA10D1	CCD-102	B210	5HK-D10
C88	.01	(.005) †	BPD-01	DD-103	BYA10S1	CCD-103	B110	5HK-S10
C89	.005		BPD-005	DD-502	BYA10D5	CCD-502	B250	5HK-D50
C90	.005		BPD-005	DD-502	BYA10D5	CCD-502	B250	5HK-D50
C91	.01		BPD-01	DD-103	BYA10S1	CCD-103	B110	5HK-S10
C92	.01		BPD-01	DD-103	BYA10S1	CCD-103	B110	5HK-S10
C93	.01		BPD-01	DD-103	BYA10S1	CCD-103	B110	5HK-S10
C94	.01		BPD-01	DD-103	BYA10S1	CCD-103	B110	5HK-S10
C95	.005		BPD-005	DD-502	BYA10D5	CCD-502	B250	5HK-D50
C96	.005		BPD-005	DD-502	BYA10D5	CCD-502	B250	5HK-D50
C97	.01	Note 1	BPD-01	DD-103	BYA10S1	CCD-103	B110	5HK-S10
C98	.01	Note 1	BPD-01	DD-103	BYA10S1	CCD-103	B110	5HK-S10
C99	.2mfd 400V		BE4P2		PKM4P22	4DP-5-204	PVC6022	4TM-P20
C100	.1mfd 400V		P488N-1	DF-104	PM4P1	4DP-3-104	GEM401	4TM-P10
C101	.01		BPD-01	DD-103	BYA10S1	CCD-103	B110	5HK-S10
C102	5pf		ADM-15-050			CM-20C-050J	SX550	MS-55
C103	2.5-6pf							

Note 1. Not used in some versions.
† Alternate Value.

CONTROLS

All wattages 1/2 watt, or less, unless otherwise listed.

ITEM No.	USE	RESISTANCE	REPLACEMENT DATA				
			KNIGHT PART No.	CENTRALAB PART No.	CLAROSTAT PART No.	CTS-IRC PART No.	MALLORY PART No.
R1	Volume & Power Sw.	500K		F2-500K, SRS012, KR-1 or (B-60-S)	A47-500K-Z, RS-2, SWE12	Q13-133, 76-1 or (BU1, CF25, SS3, GC)*	UA55A, SK750, US41 or (RU55A, SL38, SK750, US41) or (U48, US26)
R2	Squelch & HV Switch	2meg		F1-2meg, SRS012, KR-1 or (B-75, KR-1)	A47-2meg-S, RS-2, SWE12	Q11-139, 76-1 or (BU1, CF19, SS3, GC)*	UA26L, SK750, US41 or (RU26L, SL38, SK750, US41) or (U56, US26)
R3	Meter Zero	25K	F1-25K,	F1-25K, SRS006 or (B-26)	A47-25K-S, FKS-1/2	Q11-120, or (BU1, CF11, SS2, DC1)*	UA253L, SK750, or (RU253L, SL38, SK750) or (U29)

* "SNAPTROL"

(CONTINUED ON PAGE 72)

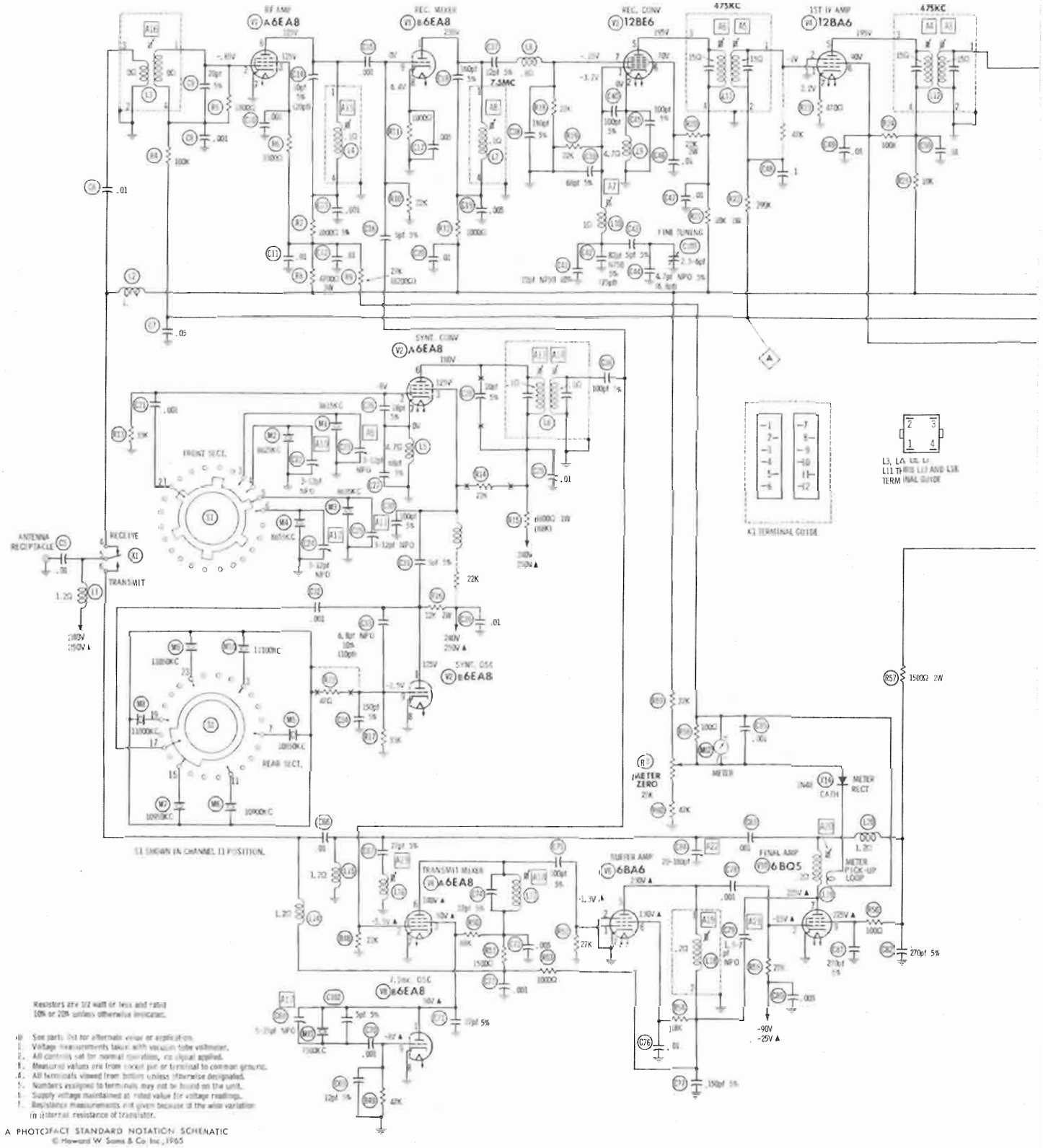
RF AMP
V1 A6EA8
REC. MIXER
V3 B6EA8
REC. CONV
V2 12BE6
475KC
1ST IF AMP
V4 12BA6
475KC
7.5MC
SYNT. CONV
V2 A6EA8
FRONT SECT.
REAR SECT.
S1 SHOWN IN CHANNEL 11 POSITION.
ANTENNA RECEPTACLE
RECEIVE
TRANSMIT
SYNT. OSC
V2 B6EA8
TRANSMIT MIXER
V8 A6EA8
BUFFER AMP
V9 6BA6
FINAL AMP
V10 6BQ5
METER PICK-UP LOOP
METER ZERO
METER
METER RECT
FINE TUNING
K1 TERMINAL GUIDE
L3, L4, L5, L7
L11 THRU L13 AND L38
TERMINAL GUIDE
Resistors are 1/2 watt or less and rated 10% or 20% unless otherwise indicated.
See parts list for alternate value or application.
Voltage measurements taken with vacuum tube voltmeter.
All controls set for normal operation, no signal applied.
Measured values are from socket pin or terminal to common ground.
All terminals viewed from bottom unless otherwise designated.
Numbers assigned to terminals may not be found on the unit.
Supply voltage maintained at rated value for voltage readings.
Resistance measurements are given because of the wide variation in internal resistance of transistor.
A PHOTOFACT STANDARD NOTATION SCHEMATIC
© Howard W. Sams & Co. Inc., 1965

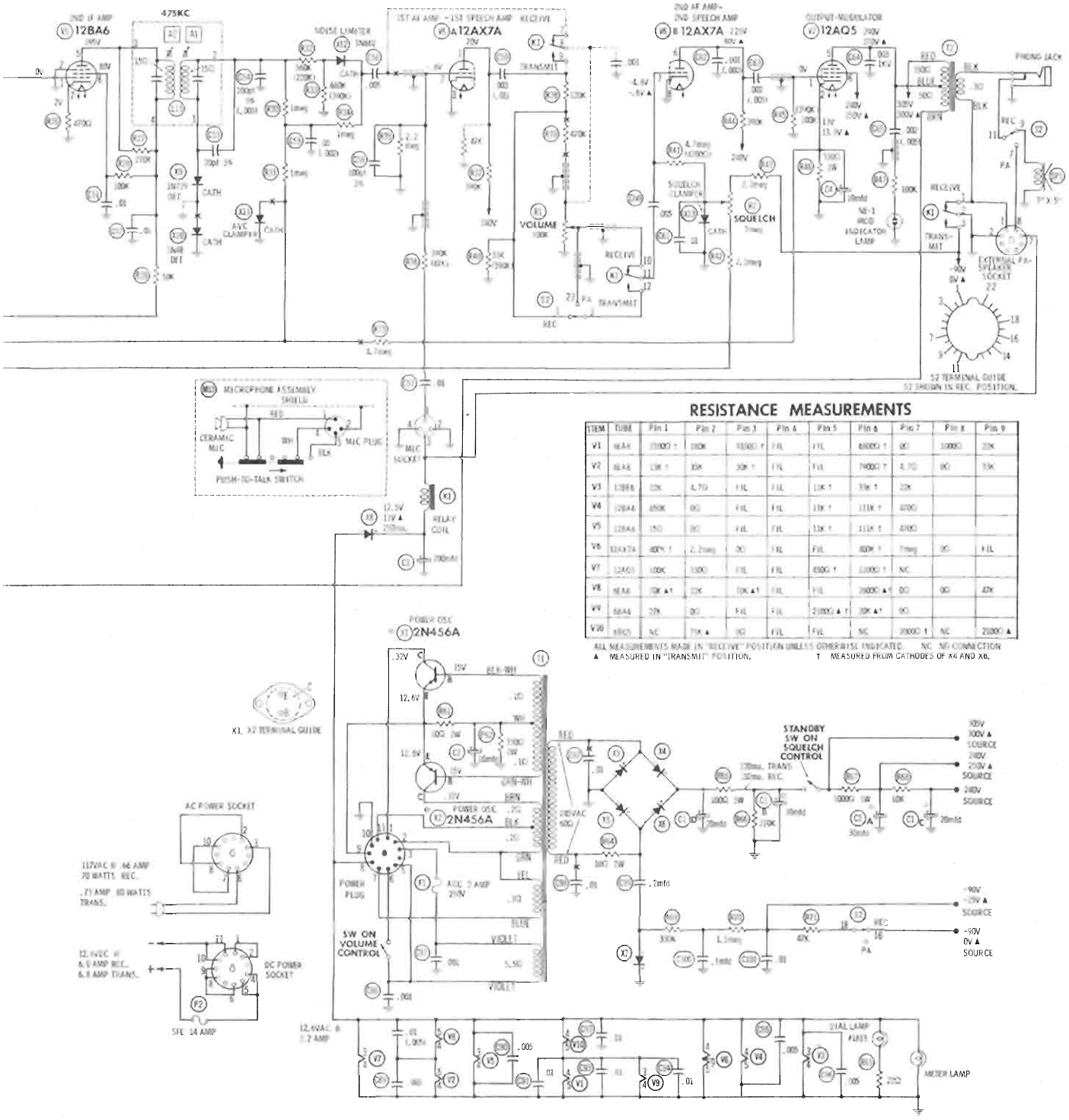

RESISTANCE MEASUREMENTS

ITEM	TUBE	Pin 1	Pin 2	Pin 3	Pin 4	Pin 5	Pin 6	Pin 7	Pin 8	Pin 9
V1	6BA6	1000Ω †	180K	1000Ω †	FIL	FIL	680Ω †	0Ω	1000Ω	22K
V2	6BA6	13K †	15K	30K †	FIL	FIL	7400Ω †	4.7Ω	0Ω	15K
V3	12BA6	22K	4.7Ω	FIL	FIL	10K †	15K †	22K		
V4	12BA6	450K	0Ω	FIL	FIL	10K †	111K †	470Ω		
V5	12BA6	15Ω	0Ω	FIL	FIL	10K †	111K †	470Ω		
V6	12AX7A	80K †	2.2meg	0Ω	FIL	FIL	80K †	7meg	0Ω	FIL
V7	12AQ5	100K	330Ω	FIL	FIL	630Ω †	1100Ω †	NC		
V8	6BA6	30K ▲†	22K	70K ▲†	FIL	FIL	2600Ω ▲†	0Ω	0Ω	47K
V9	6BA6	27K	0Ω	FIL	FIL	2100Ω ▲ †	30K ▲†	0Ω		
V10	6BQ5	NC	75K ▲	0Ω	FIL	FIL	NC	2000Ω †	NC	2000Ω ▲

ALL MEASUREMENTS MADE IN "RECEIVE" POSITION UNLESS OTHERWISE INDICATED. NC NO CONNECTION
▲ MEASURED IN "TRANSMIT" POSITION. † MEASURED FROM CATHODES OF X4 AND X6.

KNIGHT MODEL KN-2565 (86SX568)

PARTS LIST AND DESCRIPTION (CONTINUED)

RESISTORS (Power and Special)

ITEM No.	RATING	REPLACEMENT DATA		
		IRC PART No.	WORKMAN PART No.	REMARKS
R8	4700Ω 3W		3G4700	
R65	100Ω 5W	PW5-100	SW-SQ-100	

ITEM No.	RATING	REPLACEMENT DATA		
		IRC PART No.	WORKMAN PART No.	REMARKS
R67	1000Ω 5W	PW5-1000	SW-SQ-1000	

COILS (RF-IF)

ITEM No.	USE	REPLACEMENT DATA					
		KNIGHT PART No.	MEISSNER PART No.	MERIT PART No.	MILLER PART No.	STANCOR PART No.	WORKMAN PART No.
L1	RF Choke (33uh)				72F335AP		
L2	RF Choke (33uh)				72F335AP		
L3	Antenna						
L4	RF						
L5	Synt. Conv. Cath. (100uh)		19-3100	TV-194	72F104AP	RTC-8574	T866
L6	Synt. Injector						
L7	Mixer Plate (7.5MC)						
L8	RF Choke (22uh)				72F225AP		TA311
L9	Rec. Conv. Cath. (100uh)		19-3100	TV-194	72F104AP	RTC-8574	T866
L10	Rec. Oscillator				41A826CB1		
L11	1st IF (475KC)				12-C30		
L12	2nd IF (475KC)				12-C30		
L13	3rd IF (475KC)				12-C30		
L14	RF Choke (33uh)				72F225AP		
L15	RF Choke (33uh)				72F225AP		
L16	54MC Trap						
L17	Transmit Mixer Plate				42A156CB1		
L18	Buffer Amp Plate						
L19	Final Plate						
L20	RF Choke (33uh)				72F225AP		

TRANSFORMER (POWER)

ITEM No.	RATING			REPLACEMENT DATA					NOTES
	PRI.	SEC. 1	SEC. 2	KNIGHT PART No.	MERIT PART No.	STANCOR PART No.	THORDARSON PART No.	TRIAD PART No.	
T1	117VAC @ .73A *	245VAC @ 120MA*	12.6VAC @ 2.5A*						* Transmit
	PRI. 2								
	12.6VDC @ 4.3A *								

TRANSFORMER (AUDIO OUTPUT)

ITEM No.	IMPEDANCE		REPLACEMENT DATA					NOTES
	PRI.	SEC.	KNIGHT PART No.	MERIT PART No.	STANCOR PART No.	THORDARSON PART No.	TRIAD PART No.	
T2	7000Ω Tapped @ 200Ω	3-4Ω						

SPEAKER

ITEM No.	TYPE	REPLACEMENT DATA		NOTES
		KNIGHT PART No.	QUAM PART No.	
SP1	3" x 5" PM 3-4Ω		35A05	

FUSE DEVICES

ITEM No.	TYPE	KNIGHT RATING	REPLACEMENT DATA					
			PART No.		LITTELFUSE PART No.		BUSS PART No.	
			FUSE	HOLDER	FUSE	HOLDER	FUSE	HOLDER
F1	3AG	2A, 250V			312002	342014	AGC2	HKP
F2	SFE14	14A			307014	155014	SFE14	HHI-B

MISCELLANEOUS

ITEM No.	PART NAME	KNIGHT PART No.	NOTES
K1	Relay		Transmit/Receive (4 PDT)
M1	Crystal (8615KC)		
M2	Crystal (8625KC)		
M3	Crystal (8635KC)		
M4	Crystal (8655KC)		
M5	Crystal (10850KC)		
M6	Crystal (10900KC)		
M7	Crystal (10950KC)		
M8	Crystal (11000KC)		
M9	Crystal (11050KC)		
M10	Crystal (11100KC)		
M11	Crystal (7500KC)		
M12	Meter		
M13	Microphone Assembly		Ceramic
S1	Switch		Channel Selector
S2	Switch		Receive/PA

PHOTOFACT®

TRADE NAME:	Pearce-Simpson Model Guardian 23
SUPPLIER:	For Current Address, see Master Index
TYPE SET:	11-Tube, 3-Transistor Receiver
POWER SUPPLY:	110 — 120 Volts AC, 60 Cycles (or) 12 Volt Storage Battery
RATING:	72 Watts, .68 Amp. @ 117VAC (Trans.) 54 Watts, .53 Amp. @ 117VAC (Rec.) 6.0 Amp. @ 12.6VDC (Trans.) 4.2 Amp. @ 12.6VDC (Rec.)
TUNING RANGE:	All 23 CB Channels

PEARCE-SIMPSON MODEL GUARDIAN 23

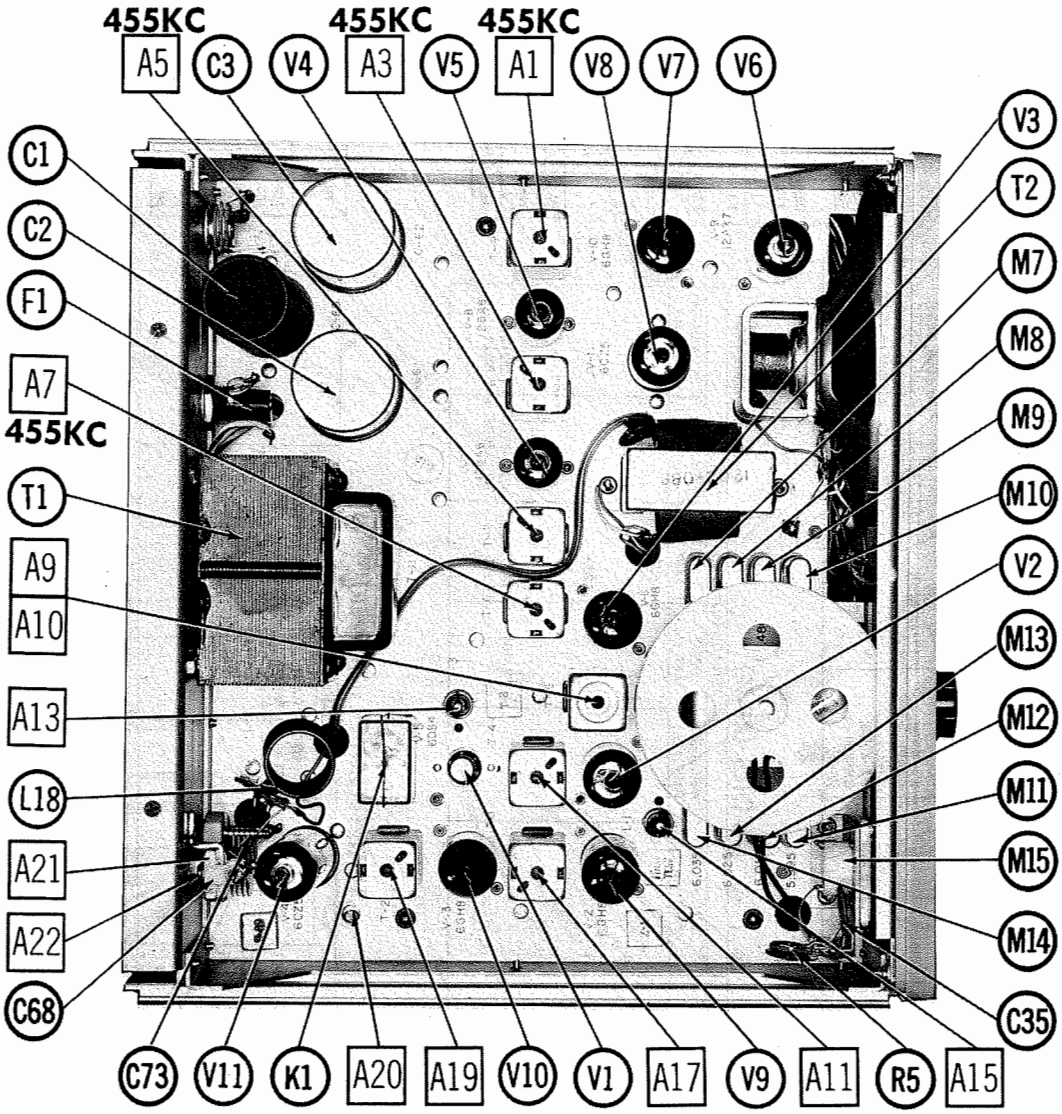

ALIGNMENT INSTRUCTIONS

Suggested Alignment Tools:

A1 thru A8, A11, A12, A16 thru A19..... GENERAL CEMENT #5097, 8727..... WALSCO #2515
A9 and A10..... GENERAL CEMENT #8606, 8606L, 8869.... WALSCO #2543, 2544, 2588
A13 thru A15, A20 thru A22..... GENERAL CEMENT #8987, 9105

RECEIVER ALIGNMENT

Connect a DC VTVM from point (A) to chassis. Set to indicate negative voltage.

SIGNAL GENERATOR	CHANNEL	ADJUST	REMARKS
High side thru .001mfd to pin 2 (grid) of V3 (2nd Rec. Mixer), low side to chassis. Tune to 455KC (Unmod.).	Any	A1 thru A8	Adjust for maximum.
High side to antenna receptacle, low side to chassis. Tune to 27.085MC (Unmod.).	11	A9 thru A13	Adjust for maximum.
"	11	A14	Disconnect one end of R8 (10K), V1 plate. Adjust A14 for MINIMUM AVC reading at point (A). Reconnect R8 and adjust A11 and A12 for maximum.

TRANSMITTER ALIGNMENT

ONLY THOSE PERSONS PROPERLY LICENSED ARE PERMITTED TO MAKE REPAIRS OR ADJUSTMENTS WHICH MAY RESULT IN ILLEGAL OPERATION. (REFER TO FCC RULES AND REGULATIONS PART 95, SUBPART D, SECTION 95.95).

The frequency of the transmitter should be checked periodically with a secondary frequency standard to insure proper and legal operation.

Best results will be obtained when adjusting the final RF output circuit if the antenna normally used is connected and the chassis is as nearly in the cabinet as possible.

Connect either 50Ω dummy load or the normally used antenna system.

INDICATOR	ADJUST	REMARKS
Frequency Meter	A15	A15 is a frequency adjustment and should only be adjusted when off frequency operation occurs.
DC VTVM from pin 2 (grid) of V10 (Buffer).	A16, A17	Adjust for maximum, approximately -15V.
DC VTVM from point (B) to chassis.	A18, A19	Adjust for -40V to -50V.
DC VTVM from point (B) to chassis, and a 0-50 DC milliammeter to the Amp Meter Test Jack.	A20	Remove V9 (Transmit Osc.-Mixer). Key the Transmitter and rotate A21 (Plate Tuning Capacitor) through its range. If VTVM indicates any drive or milliammeter any dip, adjust A20 for zero drive and no dip while rotating A21 through its range. Replace V9.
0-50 DC milliammeter to the Amp. Meter Test Jack.	A21, A22	Adjust A22 maximum clockwise (maximum capacity). Adjust A21 for greatest dip. Connect antenna to be used. Back off A22 SLIGHTLY and re-dip meter with A21. Repeat until by adjusting A21, meter reads 32MA. with a 10K screen resistor (R56) or 23MA with a 47K screen resistor (R56).

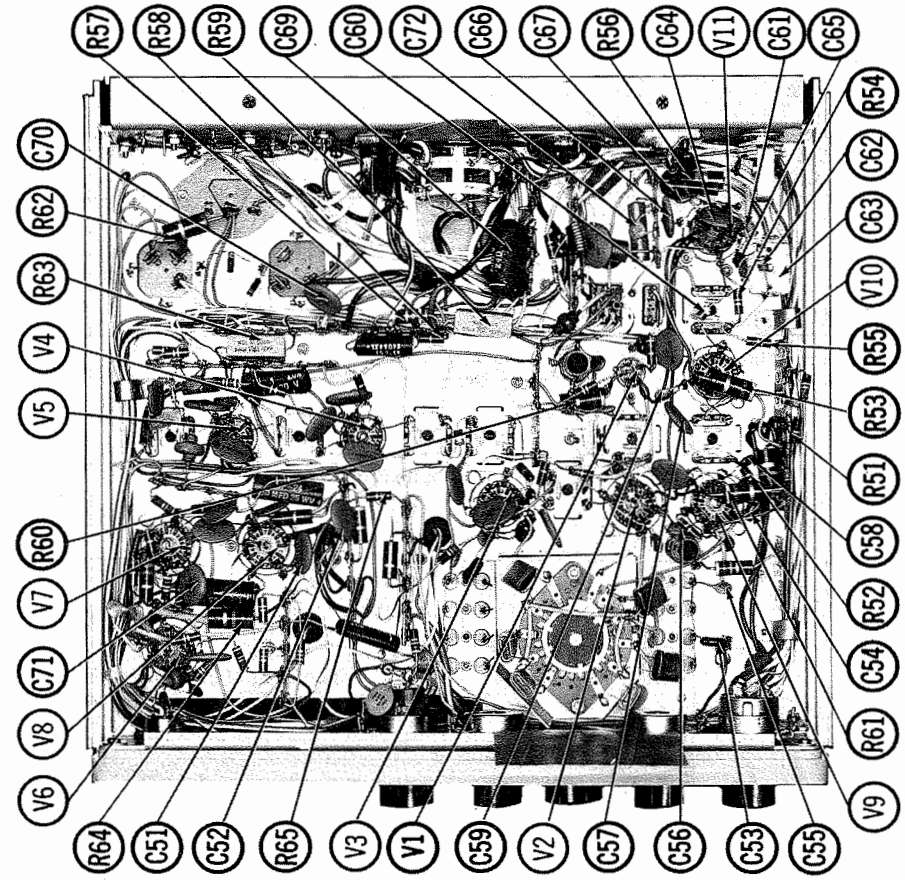
R57
R58
R59
C69
C60
C72
C66
C67
R56
C64
V11
C61
C65
R54
C62
C63
V10
R55
R53
R51
C58
R52
C54
R61
V9
C55
C53
C56
C57
V2
C59
V1
V3
R65
C52
C51
R64
V6
V8
C71
V7
R60
V5
V4
R63
R62
C70

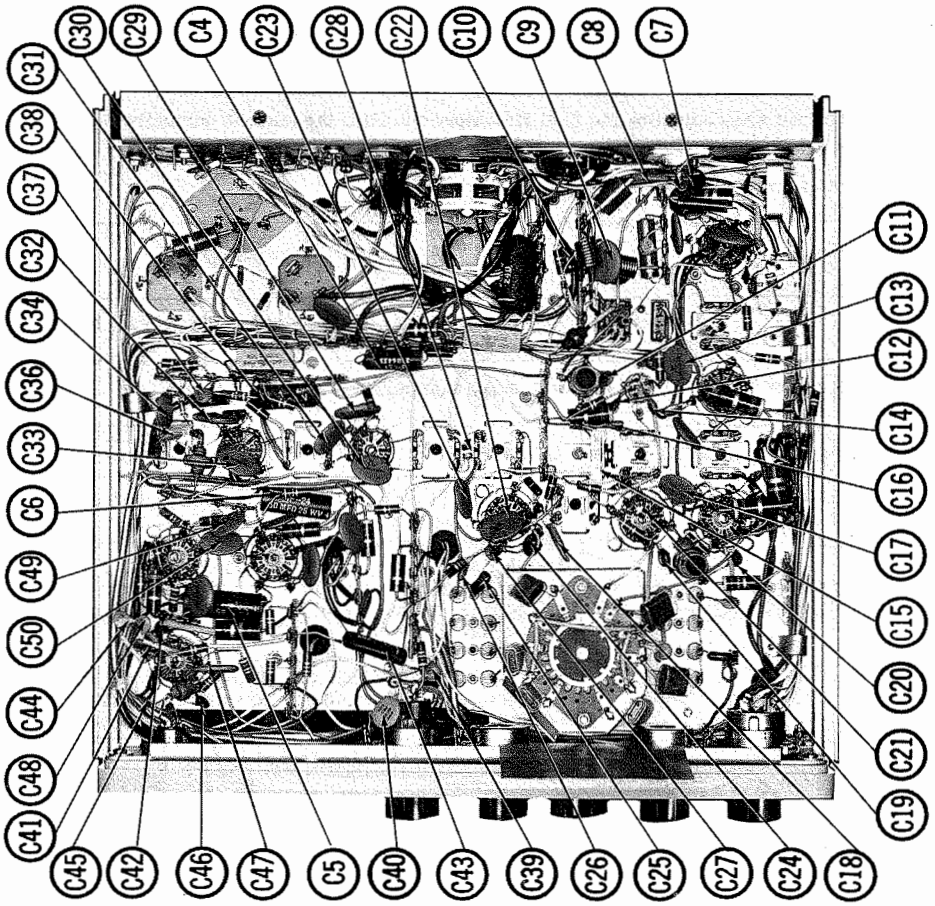
C30
C29
C4
C23
C28
C22
C10
C9
C8
C7
C31
C38
C37
C32
C34
C36
C33
C6
C49
C50
C44
C48
C41
C45
C42
C46
C47
C5
C40
C43
C39
C26
C25
C27
C24
C18
C19
C21
C20
C15
C17
C16
C14
C12
C13
C11

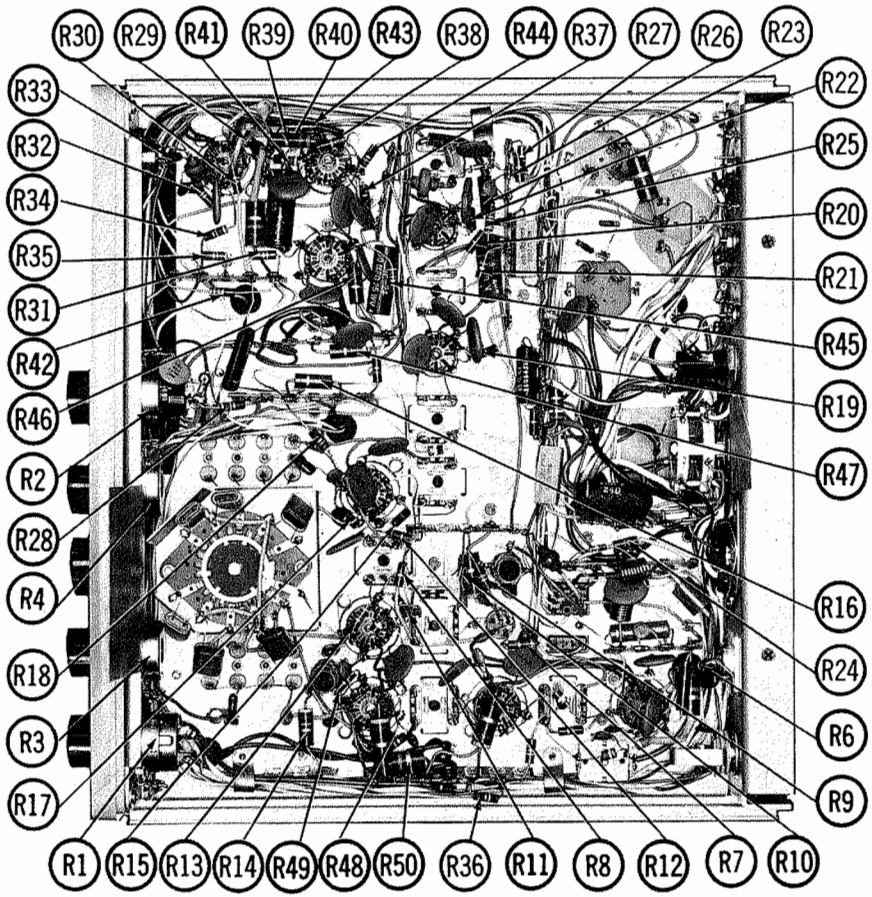
R30
R29
R41
R39
R40
R43
R38
R44
R37
R27
R26
R23
R33
R32
R34
R35
R31
R42
R46
R2
R28
R4
R18
R3
R17
R22
R25
R20
R21
R45
R19
R47
R16
R24
R6
R9
R1
R15
R13
R14
R49
R48
R50
R36
R11
R8
R12
R7
R10

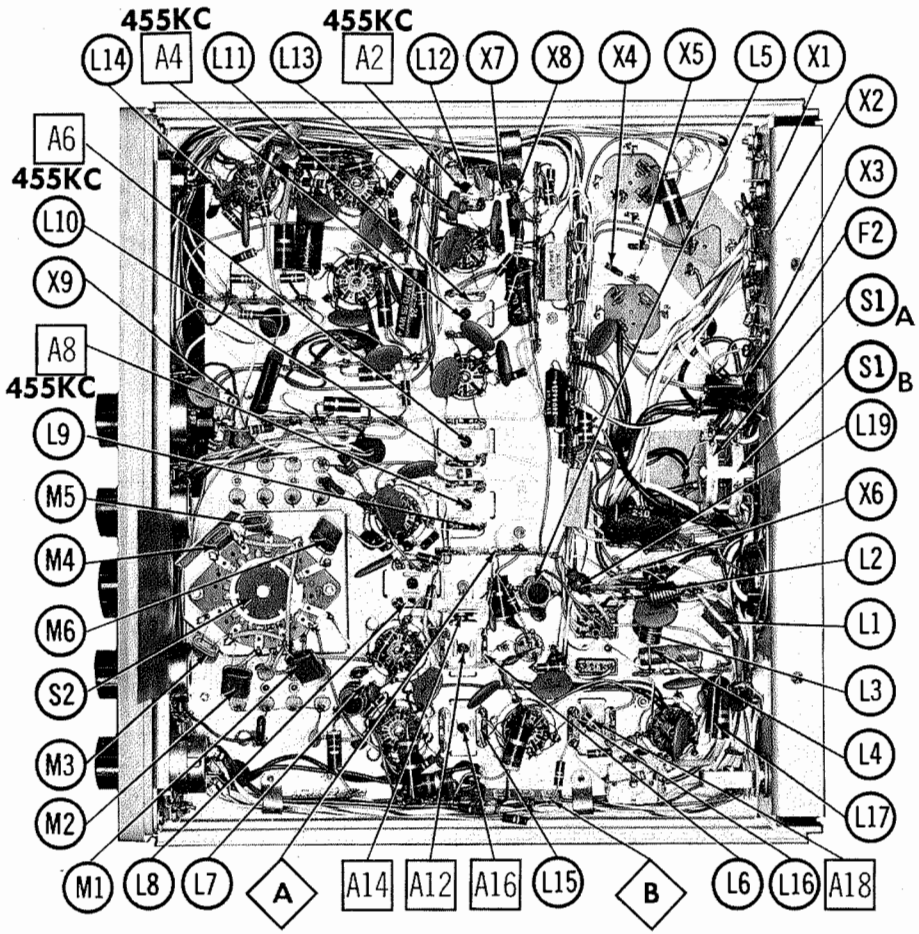
455KC
455KC
L14
A4
L11
L13
A2
L12
X7
X8
X4
X5
L5
X1
A6
455KC
L10
X9
A8
455KC
L9
M5
M4
M6
S2
M3
M2
M1
L8
L7
A
A14
A12
A16
L15
B
L6
L16
A18
X2
X3
F2
S1 A
S1 B
L19
X6
L2
L1
L3
L4
L17

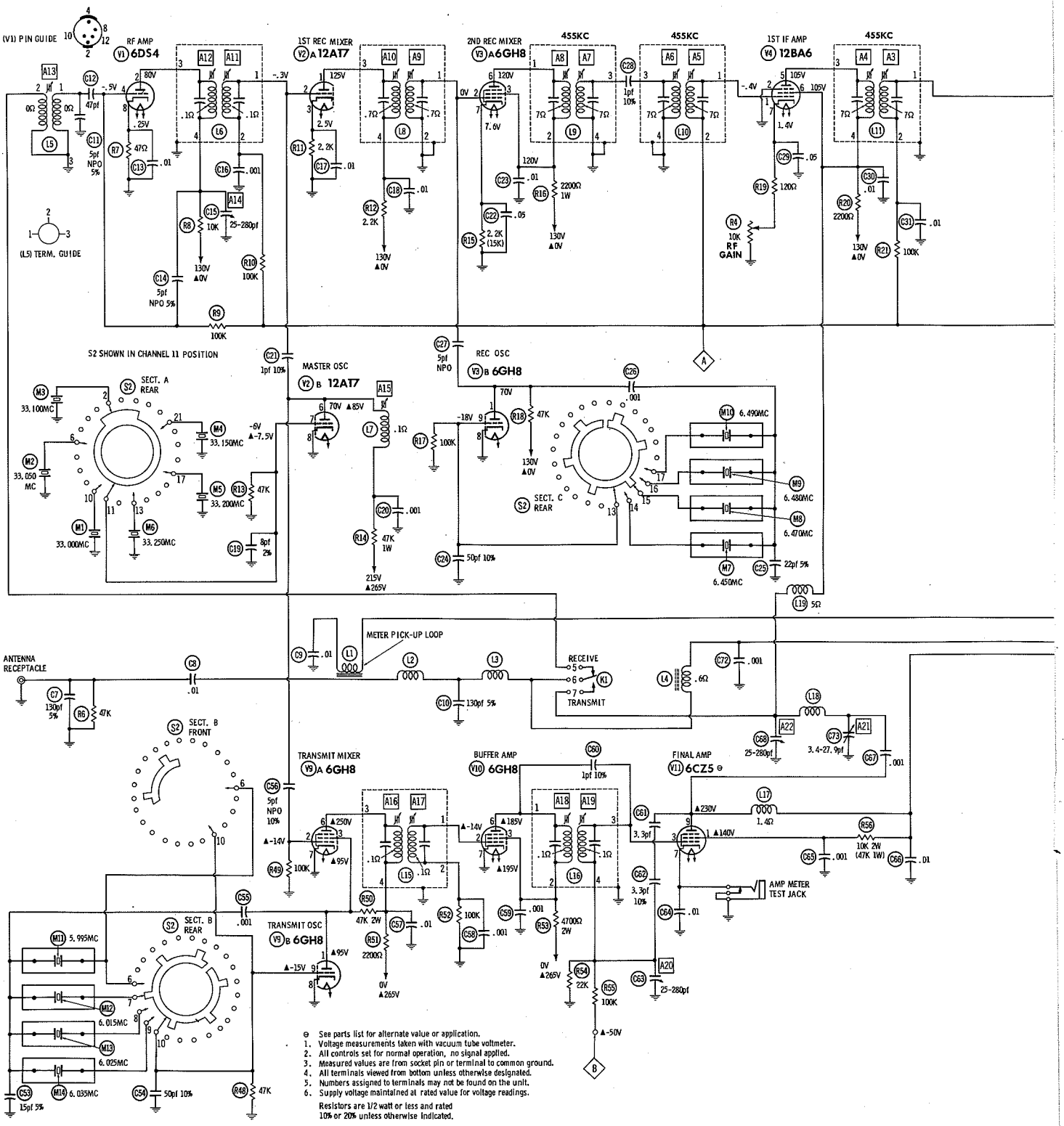

⊖ See parts list for alternate value or application.
1. Voltage measurements taken with vacuum tube voltmeter.
2. All controls set for normal operation, no signal applied.
3. Measured values are from socket pin or terminal to common ground.
4. All terminals viewed from bottom unless otherwise designated.
5. Numbers assigned to terminals may not be found on the unit.
6. Supply voltage maintained at rated value for voltage readings.

Resistors are 1/2 watt or less and rated 10% or 20% unless otherwise indicated.

A PHOTOFACT STANDARD NOTATION SCHEMATIC

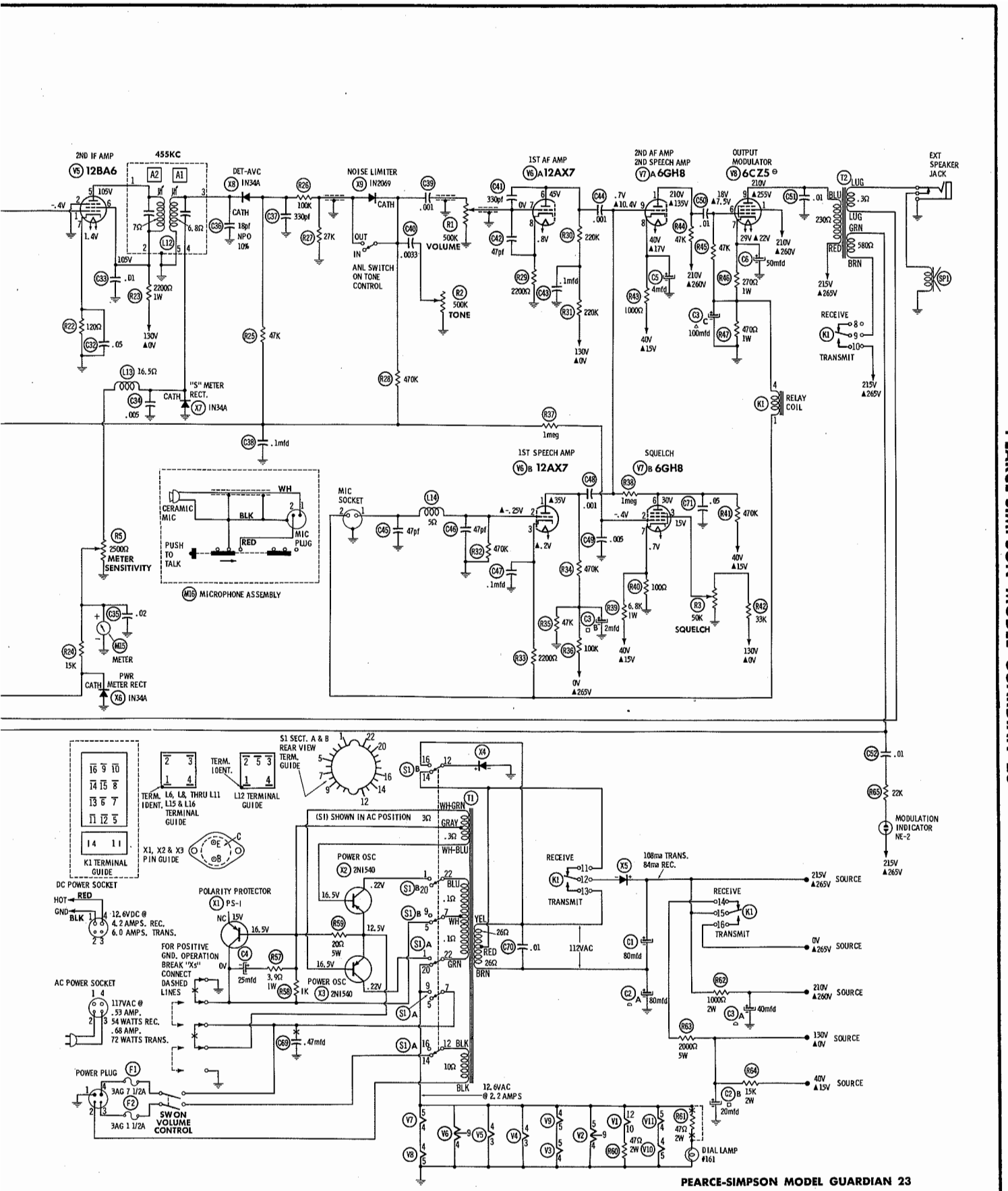

PEARCE-SIMPSON MODEL GUARDIAN 23

PARTS LIST AND DESCRIPTION

TUBES

◆ AMPEREX ◆ GENERAL ELECTRIC ◆ RCA ◆ SYLVANIA ◆

ITEM No.	USE	TYPE	ITEM No.	USE	TYPE
V1	RF Amp.	6DS4	V7	2nd AF Amp. -2nd Speech Amp. -Squelch	6GH8
V2	1st Rec. Mixer-Master Osc.	12AT7	V8	Output Modulator	6CZ5 (6973) *
V3	2nd Rec. Mixer-Rec. Osc.	6GH8	V9	Transmit Mixer-Transmit Osc.	6GH8
V4	1st IF Amp.	12BA6	V10	Buffer Amp.	6GH8
V5	2nd IF Amp.	12BA6	V11	Final Amp.	6CZ5 (6973) *
V6	1st AF Amp. -1st Speech Amp.	12AX7/ECC83			

* Alternate

TRANSISTORS

ITEM No.	ORIG. TYPE	USE	REPLACEMENT DATA			Pearce Simpson PART No.	NOTES
			DELCO PART No.	GENERAL ELECTRIC PART No.	RCA PART No.		
X1	PS-1	Polarity Protector				2901-010	PNP
X2	2N1540	Power Osc.	DS-520	GE-3		2904-008	PNP
X3	2N1540	Power Osc.	DS-520	GE-3		2904-008	PNP

POWER RECTIFIERS & SIGNAL DIODES

ITEM No.	MEASURED CURRENT	ORIGINAL Part or Type No.	RECTIFIERS				DIODES
			GENERAL ELECTRIC PART No.	MALLORY PART No.	RCA PART No.	SARKES TARZIAN PART No.	GENERAL ELECTRIC PART No.
X4	.108A	1N2071 (2102-017)	1N1697	1N2071 or 1N1492	1N2864 or 1N3195	F6 or 60C	
X5	.108A	1N2071 (2102-017)	1N1697	1N2071 or 1N1492	1N2864 or 1N3195	F6 or 60C	
X6		1N34A (2102-010)					1N34AS
X7		1N34A (2102-010)					1N34AS
X8		1N34A (2102-010)					1N34AS
X9		1N2069 (2102-014)					1N91

ELECTROLYTIC CAPACITORS

ITEM No.	RATING		REPLACEMENT DATA					
	CAP.	VOLT.	Pearce-Simpson PART No.	AEROVOX PART No.	CORNELL-DUBILIER PART No.	GENERAL ELECTRIC PART No.	MALLORY PART No.	SPRAGUE PART No.
C1	80	250	0406-036		AA0350 ①		FP128A ①	TVL-1573 ①
C2A	▲80	250						
B	■20	250	0406-037	AFH3-25-40	CCO237	XC3-12	FP331.2	TVL-3582
C	▲10 ②	250						
C3A	▲40	400					FP229.6	
B	■2	100	0406-038				TT150X2	
C	▲100	25						
C4	25	15	0406-017	PTT69	NLW25-15	MT1-14	TT15X25	TE-1157.1
C5	4	150	0406-045	PRS1400	BBR4-150	QT1-3	TT150X4	TVA-1402
C6	50 ②	25	0406-024	PTT85	NLW50-25	MT1-17	TT25X50	TE-1209

① Use insulating sleeve.
② C2C is not used in some versions but may be used in lieu of C6 in other versions.

FIXED CAPACITORS

ITEM No.	RATING	REMARKS	REPLACEMENT DATA					
			AEROVOX PART No.	CENTRALAB PART No.	CORNELL-DUBILIER PART No.	ELMENCO PART No.	MALLORY PART No.	SPRAGUE PART No.
C7	130 5%		ADM-15-131	CPR-130J	CD10F131J	DM-10-131J		MS-313
C8	.01		BPD-01	DD-103	BYA10S1	CCD-103	B110	5HK-S10
C9	.01		BPD-01	DD-103	BYA10S1	CCD-103	B110	5HK-S10
C10	130 5%		ADM-15-131	CPR-130J	CD10F131J	DM-10-131J		MS-313
C11	5pf NPO 5%							10TCC-V50
C12	47		BPD-000047	DD-470	LA10Q47-S3	CCD-470	GP447	5GA-Q47
C13	.01		BPD-01	DD-103	BYA10S1	CCD-103	B110	5HK-S10
C14	5pf NPO 5%	#0401-014						10TCC-V50
C15	25-280	#0403-025				464		
C16	.001		BPD-001	DD-102	BYA10D1	CCD-102	B210	5HK-D10
C17	.01		BPD-01	DD-103	BYA10S1	CCD-103	B110	5HK-S10
C18	.01		BPD-01	DD-103	BYA10S1	CCD-103	B110	5HK-S10
C19	8pf 2%	#0402-049						
C20	.001		BPD-001	DD-102	BYA10D1	CCD-102	B210	5HK-D10
C21	1pf 10%	#0401-041						
C22	.05		BPD-05	DD-503		CCD-503	GP150	5HK-S50
C23	.01		BPD-01	DD-103	BYA10S1	CCD-103	B110	5HK-S10
C24	50 10%		ADM-15-500	CPR-47J	CD10F510J	DM-10-500K	CNO450	MS-45
C25	22 5%		ADM-15-220	CPR-22J	CD10C220J	DM-10-220J	CNO411	MS-422
C26	.001		BPD-001	DD-102	BYA10D1	CCD-102	B210	5HK-D10
C27	5pf NPO		NPO-DI 5.0	DTZ-4R7	C10V47C	CCTO-050	CNO547	10TCC-V50
C28	1pf 10%	#0401-041						
C29	.05		BPD-05	DD-503		CCD-503	GP150	5HK-S50
C30	.01		BPD-01	DD-103	BYA10S1	CCD-103	B110	5HK-S10
C31	.01		BPD-01	DD-103	BYA10S1	CCD-103	B110	5HK-S10
C32	.05		BPD-05	DD-503		CCD-503	GP150	5HK-S50
C33	.01		BPD-01	DD-103	BYA10S1	CCD-103	B110	5HK-S10
C34	.005		BPD-005	DD-502	BYA10D5	CCD-502	B250	5HK-D50
C35	.02		BPD-02	DD-203	BYA6S2	CCD-203	B120	5HK-S20
C36	18 NPO 10%			TCZ-18		CCTO-180	CNO418	10TCC-Q18

PARTS LIST AND DESCRIPTION (CONTINUED)

FIXED CAPACITORS(cont)

ITEM No.	RATING	REMARKS	REPLACEMENT DATA					
			AEROVOX PART No.	CENTRALAB PART No.	CORNELL-DUBILIER PART No.	ELMENCO PART No.	MALLORY PART No.	SPRAGUE PART No.
C37	330		BPD-00033	DD-331	LA10T33-C4	CCD-331	GP333	5GA-T33
C38	.1mfd 200V		P288N-1	DF-104	PKM2P1	2DP-3-104	GEM201	2TM-P10
C39	.001		BPD-001	DD-102	BYA10D1	CCD-102	B210	5HK-D10
C40	.0033		BPD-0033	DD-332	BYA10D33	CCD-332	B233	5HK-D33
C41	330		BPD-00033	DD-331	LA10T33-C4	CCD-331	GP333	5GA-T33
C42	47		BPD-000047	DD-470	LA10Q47-S3	CCD-470	GP447	5GA-Q47
C43	.1mfd 200V		P288N-1	DF-104	PKM2P1	2DP-3-104	GEM201	2TM-P10
C44	.001		BPD-001	DD-102	BYA10D1	CCD-102	B210	5HK-D10
C45	47		BPD-000047	DD-470	LA10Q47-S3	CCD-470	GP447	5GA-Q47
C46	47		BPD-000047	DD-470	LA10Q47-S3	CCD-470	GP447	5GA-Q47
C47	.1mfd 50V		TTD-1	CK-104	H6		TA010	TG-P10
C48	.001		BPD-001	DD-102	BYA10D1	CCD-102	B210	5HK-D10
C49	.005		BPD-005	DD-502	BYA10D5	CCD-502	B250	5HK-D50
C50	.01		BPD-01	DD-103	BYA10S1	CCD-103	B110	5HK-S10
C51	.01		BPD-01	DD-103	BYA10S1	CCD-103	B110	5HK-S10
C52	.01		BPD-01	DD-103	BYA10S1	CCD-103	B110	5HK-S10
C53	15 5%		ADM-15-150	DTZ-15	CD10C150J	DM-10-150J	CNO415	MS-415
C54	50 10%		ADM-15-500	CPR-47J	CD10F510J	DM-10-500K	CNO450	MS-45
C55	.001		BPD-001	DD-102	BYA10D1	CCD-102	B210	5HK-D10
C56	5pf NPO 10%		NPO-DI 5.0	DTZ-4R7	C10V47C	CCTO-050	CNO547	10TCC-V50
C57	.01		BPD-01	DD-103	BYA10S1	CCD-103	B110	5HK-S10
C58	.001		BPD-001	DD-102	BYA10D1	CCD-102	B210	5HK-D10
C59	.001		BPD-001	DD-102	BYA10D1	CCD-102	B210	5HK-D10
C60	1pf 10%	#0401-041						
C61	3.3pf 10%	#0401-043						
C62	3.3pf 10%	#0401-043						
C63	25-280	#0403-025				464		
C64	.01		BPD-01	DD-103	BYA10S1	CCD-103	B110	5HK-S10
C65	.001		BPD-001	DD-102	BYA10D1	CCD-102	B210	5HK-D10
C66	.01		BPD-01	DD-103	BYA10S1	CCD-103	B110	5HK-S10
C67	.001		BPD-001	DD-102	BYA10D1	CCD-102	B210	5HK-D10
C68	25-280	#0403-025				464		
C69	.47mfd 200V		P288N-47		PM2P47	2DP-5-474	PVC2047	2PS-P47
C70	.01		BPD-01	DD-103	BYA10S1	CCD-103	B110	5HK-S10
C71	.05		BPD-05	DD-503		CCD-503	GP150	5HK-S50
C72	.001		BPD-001	DD-102	BYA10D1	CCD-102	B210	5HK-D10
C73	3.4-27.9pf	#0401-014						

Pearce-Simpson Part Number.

CONTROLS

All wattages 1/2 watt, or less, unless otherwise listed.

ITEM No.	USE	RESISTANCE	REPLACEMENT DATA				
			Pearce-Simpson PART No.	CENTRALAB PART No.	CLAROSTAT PART No.	CTS-IRC PART No.	MALLORY PART No.
R1	Volume & Power Sw.	500K	2008-044	F2-500K, SRS012, KR-2	A47-500K-Z, RS-2, SWE-20	Q13-133, 76-2, or (BU1, CF25, SS3, WF)*	RU55A, SL38, SK750, US42
R2	Tone & ANL Switch	500K	2008-042	F2-500K, SPU304, KR-8	C47S-500K-Z, RS-2	B13-133, SK7, or (PPQ13-133, SK7) or (BU1, CF25, SS11, K)*	PP55A or (RUP55A, SL35, SL250)
R3	Squelch	50K	2008-041	F1-50K, SRS012	A47-50K-S, RS-2	Q11-123, or (BU1, CF12, SS3, DC1)*	RU54L, SL38, SK750
R4	RF Gain	10K	2008-043	F1-10K, SRS012	A47-10K-S, RS-2	Q11-116, or (BU1, CF9, SS3, DC1)*	RU14L, SL38, SK750
R5	Meter Sensitivity	2500Ω	2008-035	V-3000	U39-3000		MR3000P

* "SNAPTROL"

RESISTORS (Power and Special)

ITEM No.	RATING	REPLACEMENT DATA		
		IRC PART No.	WORKMAN PART No.	REMARKS
R59	20Ω 5W	PW5-20	5W-SQ-20	#2011-002
R63	2000Ω 5W	PW5-2000	5W-SQ-2000	#2011-001

Pearce-Simpson Part Number.

COILS (RF-IF)

ITEM No.	USE	REPLACEMENT DATA					
		Pearce-Simpson PART No.	MEISSNER PART No.	MERIT PART No.	MILLER PART No.	STANCOR PART No.	WORKMAN PART No.
L1	Meter Pick-up Loop						
L2	Low Pass Filter (.36uh)	1201-120					
L3	Low Pass Filter (.36uh)	1201-120					
L4	RF Choke (5.6uh)	1201-058			74F566AP	RTC-8519	T820
L5	Antenna	1201-118					
L6	RF	1201-055					
L7	Master Osc. Plate (2uh)	1201-119					
L8	1st IF (5.995MC - 6.035MC)	1201-117					
L9	2nd IF (455KC)	1201-026		BC-356	12-C31	RTC-9275	T646
L10	3rd IF (455KC)	1201-026		BG-356	12-C31	RTC-9275	T646
L11	4th IF (455KC)	1201-026		BC-356	12-C31	RTC-9275	T646
L12	5th IF (455KC)	1201-096					
L13	RF Choke (500uh)	1201-042	19-3500	TV-188	6174	RTC-9173	T975
L14	RF Choke (73uh)	1201-036	19-4073	TV-186	6172		T303
L15	RF Interstage	1201-055					
L16	RF Interstage	1201-055					
L17	RF Choke (23uh)	1201-071			74F225A1	RTC-8525	TA807
L18	PI Network (2.2uh)	1201-121					
L19	RF Choke (73uh)	1201-036	19-4073	TV-186	6172		T303

PARTS LIST AND DESCRIPTION (CONTINUED)

TRANSFORMER (POWER)

ITEM No.	RATING			REPLACEMENT DATA					NOTES
	PRI. 1	SEC. 1	SEC. 2	Pearce-Simpson PART No.	MERIT PART No.	STANCOR PART No.	THORDARSON PART No.	TRIAD PART No.	
T1	117VAC @ .68A*	112VCT @ .108A *	12.6VAC @ 2.2A	1202-089					* Transmit
	PRI. 2	SEC. 3	SEC. 5						
	12.6VDC @ 6.0A*	6.0VCT @ .2A							

TRANSFORMER (AUDIO OUTPUT)

ITEM No.	IMPEDANCE		REPLACEMENT DATA					NOTES
	PRI.	SEC. 1	Pearce-Simpson PART No.	MERIT PART No.	STANCOR PART No.	THORDARSON PART No.	TRIAD PART No.	
T2	9000Ω	3-4Ω	1202-088					
		SEC. 2						
		22K						

SPEAKER

ITEM No.	TYPE	REPLACEMENT DATA		NOTES
		Pearce-Simpson PART No.	QUAM PART No.	
SP1	3" x 5" PM 3-4Ω	2501-016	35A05	

FUSES

ITEM No.	TYPE	RATING	REPLACEMENT DATA					
			Pearce-Simpson PART No.		LITTELFUSE PART No.		BUSS PART No.	
			FUSE	HOLDER	FUSE	HOLDER	FUSE	HOLDER
F1	3AG	7 1/2A 32V		0802-001	31107.5	342004	AGC 7 1/2	HKP
F2	3AG	1 1/2A 250V		0802-001	AGC 7 1/2	342004	AGC 1 1/2	HKP

MISCELLANEOUS

ITEM No.	PART NAME	Pearce-Simpson PART No.	NOTES
K1	Relay, Transmit Receive	1902-020	4PDT 12 Volt
M1	Crystal 33.000MC	0506-001	
M2	Crystal 33.050MC	0506-002	
M3	Crystal 33.100MC	0506-003	
M4	Crystal 33.150MC	0508.004	
M5	Crystal 33.200MC	0506-005	
M6	Crystal 33.250MC	0506-006	
M7	Crystal 6.450MC	0506-011	
M8	Crystal 6.470MC	0506-012	
M9	Crystal 6.480MC	0506-013	
M10	Crystal 6.490MC	0506-014	
M11	Crystal 5.995MC	0506-007	
M12	Crystal 6.015MC	0506-008	
M13	Crystal 6.025MC	0506-009	
M14	Crystal 6.035MC	0506-010	
M15	S Meter	3701-007	
M16	Microphone Assembly	1601-011	Ceramic
S1	Power Switch, AC-DC	2701-022	
S2	Channel Selector Sw.	2701-068	With Shield

CABINETS & CABINET PARTS

(When Ordering Specify Model, Chassis & Color)

ITEM	PART No.
Cabinet Half	1510-013
Indicator Dial Drum	1511-035

ITEM	PART No.
Knob, Small	1303-048
Knob, Large	1303-049

WIRING DATA

General-use Hook-up Wire .... Use BELDEN No. 8530 (Solid) Available in 12 Colors
8524 (Stranded) Available in 12 Colors)
Shielded Antenna Lead ..... Use BELDEN No. 8214 Lowest Loss (RG-8/U Type)
8237 Low Loss (RG-8/U)
8240 (Solid) Miniature (RG-58/U)
8259 (Stranded) Miniature (RG-58A/U)
Coiled Microphone Cable ..... Use BELDEN No. 8499 Single Conductor Shielded (Neoprene)
8498 Single Conductor Shielded (Vinyl)
Ignition Noise Suppression .... Use BELDEN No. 7300-Series Spark-Plug Sets
Bonding Strap ..... Use BELDEN No. 8661 (3/8 In.)

TRADE NAME: Raytheon Model Ray-Tel TWR-5

SUPPLIER: For Current Address, see Master Index

TYPE SET: 14-Transistor Transceiver

POWER SUPPLY: 12-Volt Storage Battery

RATING: .9 Amp. @ 12.6VDC (Receiv)
1.4Amp. @ 12.6VDC (Transmit)

TUNING RANGE: Any 11 CB Channels 1 thru 23

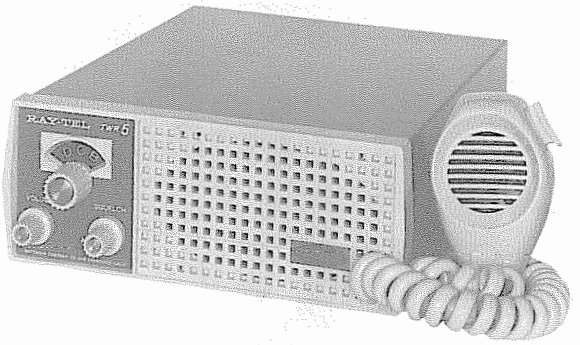

ALIGNMENT INSTRUCTIONS

Suggested Alignment Tools:
A1 thru A13, A15.....GENERAL CEMENT #8606
A14.....GENERAL CEMENT #8868, 9087, 9089....WALSCO #2528, 2541, 2587

RECEIVER ALIGNMENT

Connect a DC VTVM from point Ⓐ to ground. Set to read positive voltage.

SIGNAL GENERATOR	CHANNEL	ADJUST	REMARKS
High side thru .01mfd to base of X2 (Mixer), low side to B + side of R8. Set at 455KC (unmod.)	Any	A1 thru A7	Adjust for maximum.
High side to antenna receptacle, low side to chassis. Tune to 27.085mc (unmod.)	11	A8, A9, A10	Adjust for maximum.

TRANSMITTER ALIGNMENT

ONLY THOSE PERSONS PROPERLY LICENSED ARE PERMITTED TO MAKE REPAIRS OR ADJUSTMENTS WHICH MAY RESULT IN ILLEGAL OPERATION. (REFER TO FCC RULES AND REGULATIONS PART 95, SUBPART D, SECTION 95.95).

The frequency of the transmitter should be checked periodically with a secondary frequency standard to insure proper and legal operation.

Best results will be obtained when adjusting the final RF output circuit if the antenna normally used is connected and the chassis is as nearly in the cabinet as possible.

Connect either 50Ω dummy load or the normally used antenna system.

INDICATOR	ADJUST	REMARKS
Remove jumper at point Ⓑ and connect a 0-1DC ammeter.	A11, A12	Adjust for maximum. Key Transmitter several times to insure oscillator starting on each channel.
"	A13, A14, A15	Adjust for maximum. Readjust as required for 5 watts (400ma).

Adjust Modulation Level (R3) with scope for maximum modulation, Minimum distortion.

HOWARD W. SAMS & CO., INC. Indianapolis 6, Indiana

 RY021

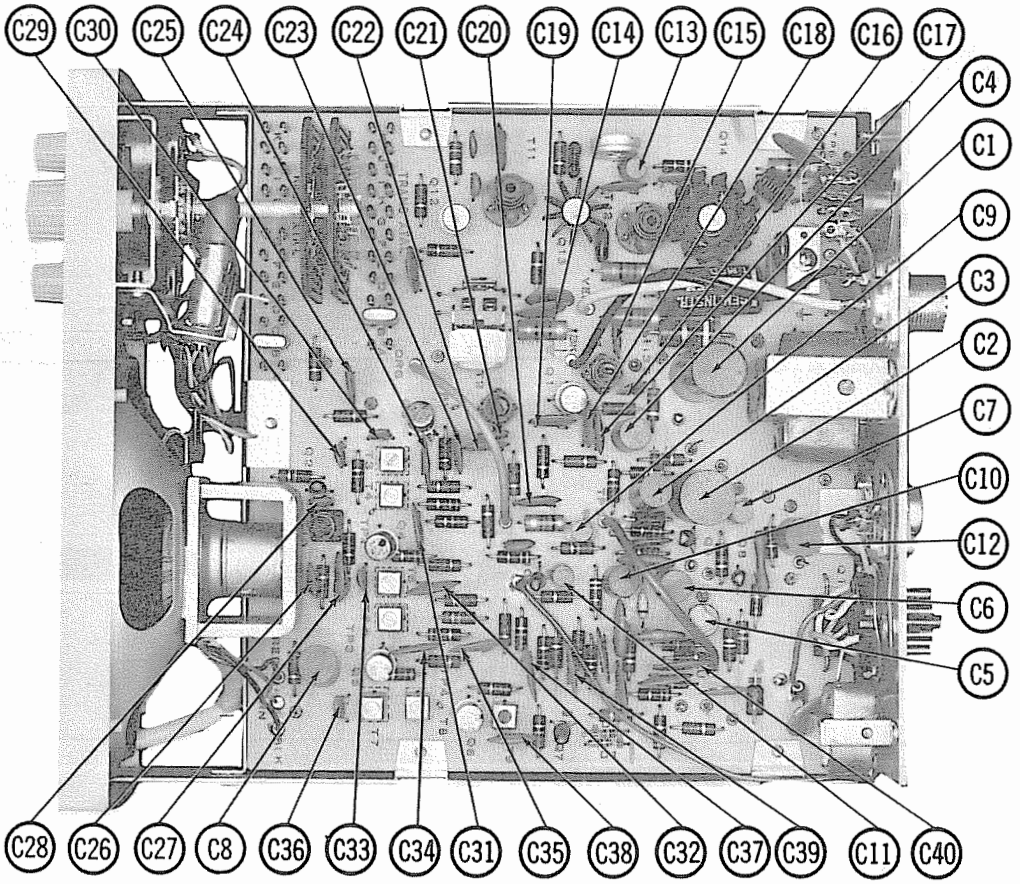
C29
C30
C25
C24
C23
C22
C21
C20
C19
C14
C13
C15
C18
C16
C17
C4
C1
C9
C3
C2
C7
C10
C12
C6
C5
C28
C26
C27
C8
C36
C33
C34
C31
C35
C38
C32
C37
C39
C11
C40

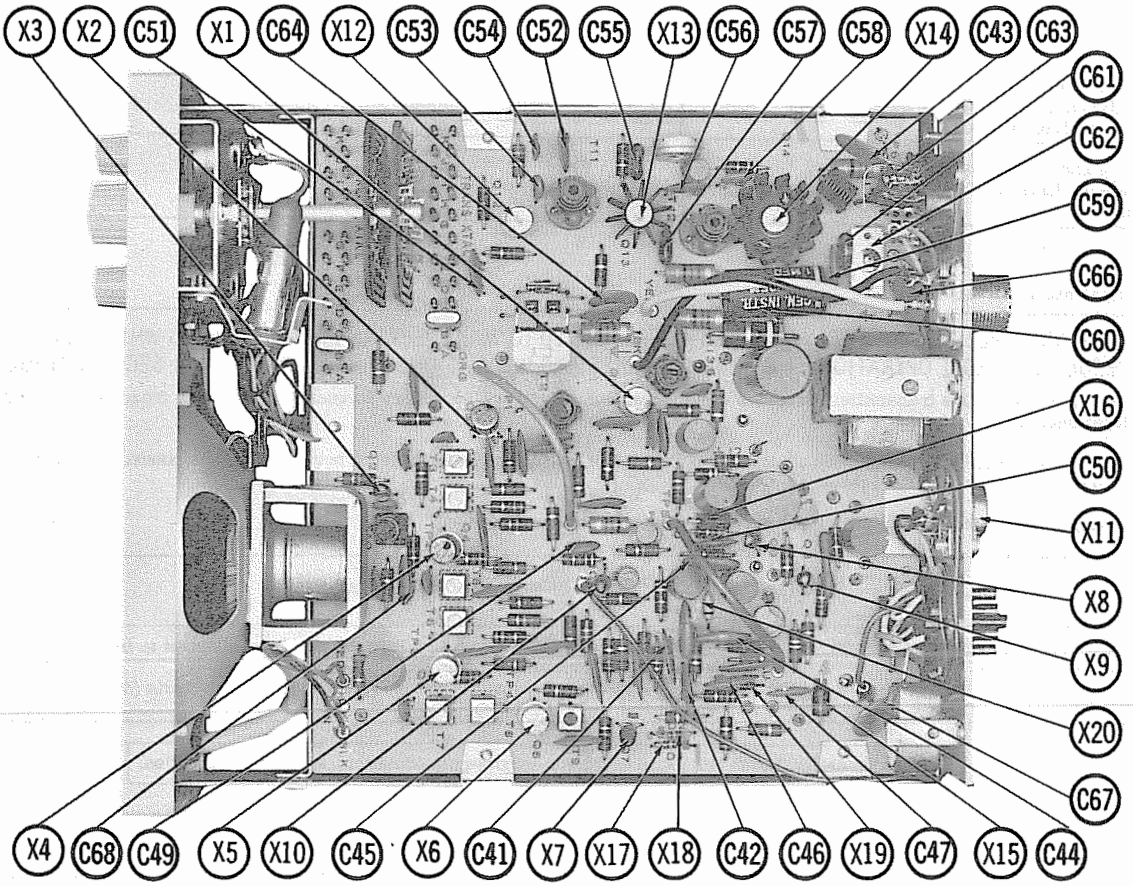
X3
X2
C51
X1
C64
X12
C53
C54
C52
C55
X13
C56
C57
C58
X14
C43
C63
C61
C62
C59
C66
C60
X16
C50
X11
X8
X9
X20
C67
X4
C68
C49
X5
X10
C45
X6
C41
X7
X17
X18
C42
C46
X19
C47
X15
C44

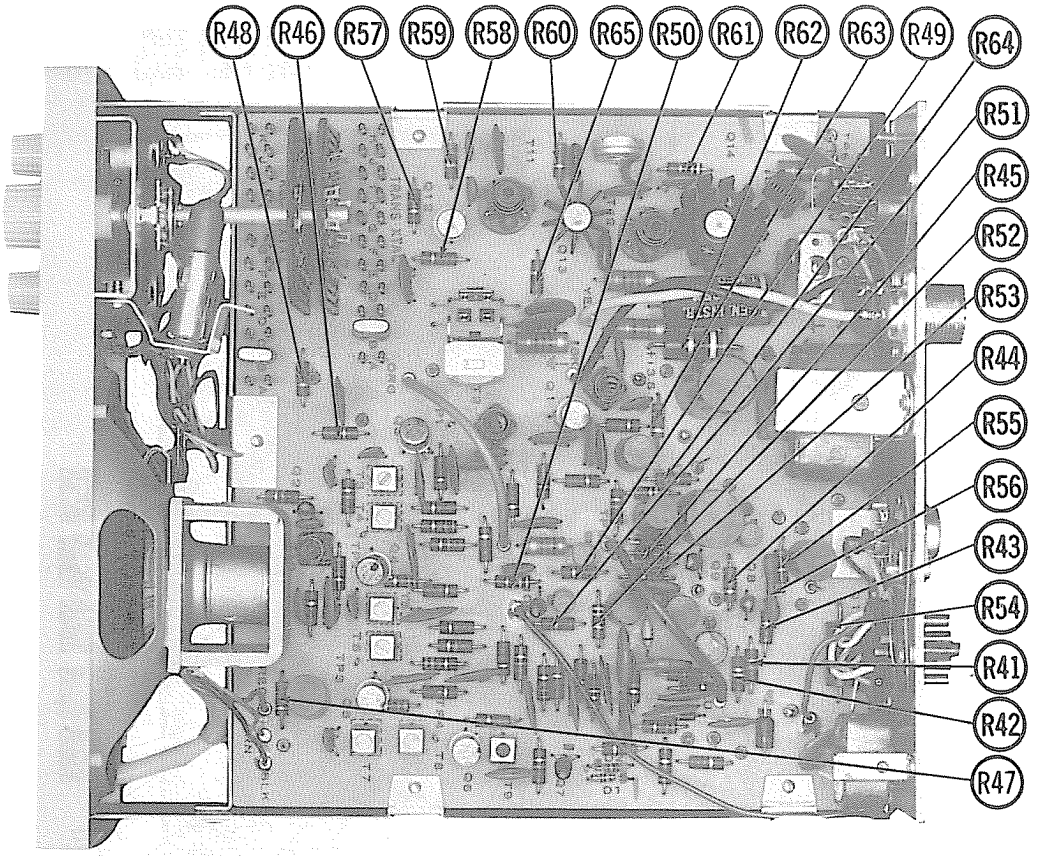
R48
R46
R57
R59
R58
R60
R65
R50
R61
R62
R63
R49
R64
R51
R45
R52
R53
R44
R55
R56
R43
R54
R41
R42
R47

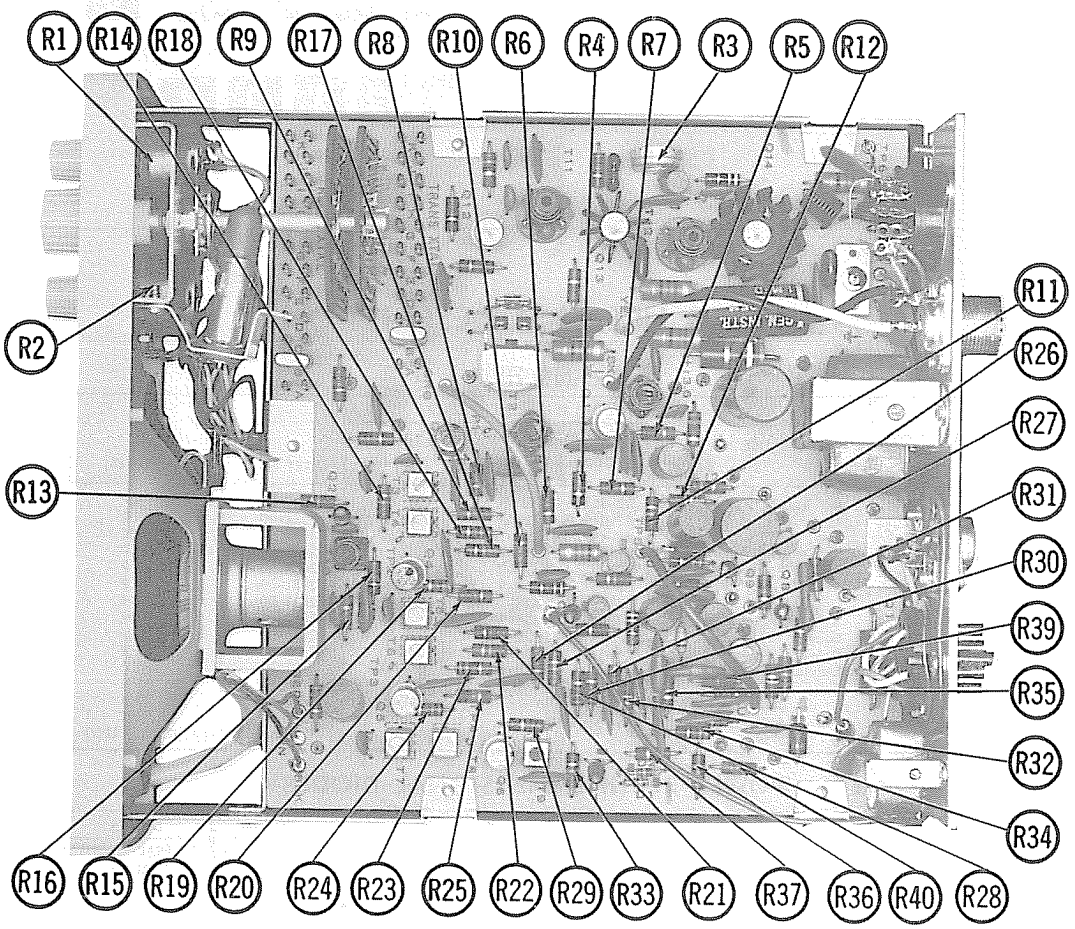
R1
R14
R18
R9
R17
R8
R10
R6
R4
R7
R3
R5
R12
R2
R13
R11
R26
R27
R31
R30
R39
R35
R32
R34
R16
R15
R19
R20
R24
R23
R25
R22
R29
R33
R21
R37
R36
R40
R28

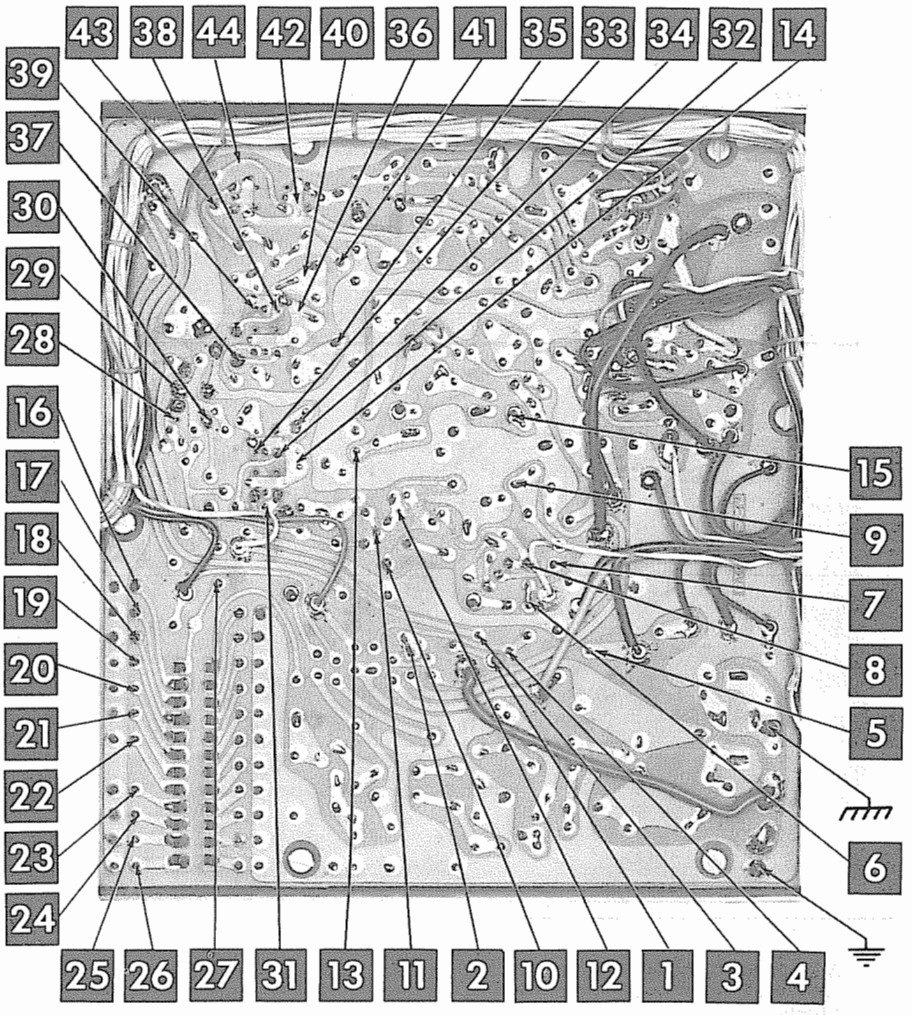

A Howard W. Sams CIRCUITRACE® Photo

PARTS LIST AND DESCRIPTION

TRANSISTORS

ITEM No.	ORIG. TYPE	USE	REPLACEMENT DATA			PART No.	NOTES
			DELCO PART No.	GENERAL ELECTRIC PART No.	RCA PART No.		
X1	2N2671	RF Amp.	DS-41	GE-9	SK-3008	2020-00	PNP
X2	2N2672	Mixer	DS-41	GE-9	SK-3008	2021-00	PNP
X3	2N2926*	Rec. Osc.	DS-46	GE-10		2015-00	NPN
X4	2N2672	1st IF Amp.	DS-25	GE-9		2021-00	PNP
X5	2N2672	2nd IF Amp.	DS-25	GE-9	SK-3008	2021-00	PNP
X6	2N2672	3rd IF Amp.	DS-25	GE-9	SK-3008	2021-00	PNP
X7	2N2926*	Detector	DS-46	GE-10	SK-3008	2015-00	NPN
X8	2N2926*	AF Amp.	DS-44	GE-10		2015-00	NPN
X9	2N2926*	Squelch	DS-44	GE-10		2015-00	NPN
X10	2N2926*	Driver - Speech Amp.	DS-44	GE-10		2015-00	NPN
X11	2N301	Output - Modulator	DS-520	GE-3	SK-3009	2007-01	PNP
X12	40080	Transmit Osc.			40080	2028-00	NPN
X13	40080	Transmit Driver			40081	2026-00	NPN
X14	40082	Final Amp.			40082	2027-00	NPN

* Alternate Type 2N2712 (NPN)

POWER RECTIFIERS & SIGNAL DIODES

ITEM No.	MEASURED CURRENT	ORIGINAL Part or Type No.	RECTIFIERS				DIODES
			GENERAL ELECTRIC PART No.	MALLORY PART No.	RCA PART No.	SARKES TARZIAN PART No.	GENERAL ELECTRIC PART No.
X15		1N2071 (0727-21)			40266		
X16		VR9.1A Zener 1W (0730-28)					

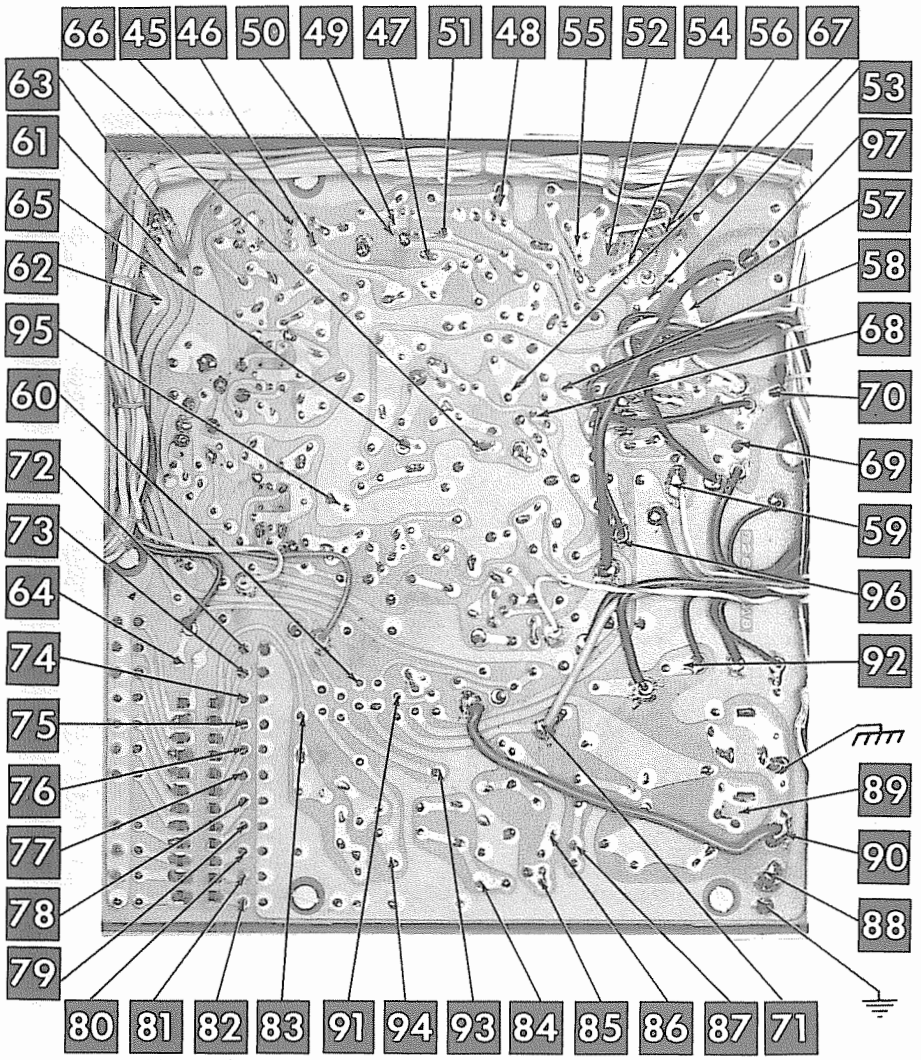

A Howard W. Sams CIRCUITRACE® Photo

RAYTHEON MODEL RAY-TEL TWR-5

PARTS LIST AND DESCRIPTION (CONTINUED)

POWER RECTIFIERS & SIGNAL DIODES (cont)

ITEM No.	MEASURED CURRENT	ORIGINAL Part or Type No.	RECTIFIERS				DIODES
			GENERAL ELECTRIC PART No.	MALLORY PART No.	RCA PART No.	SARKES TARZIAN PART No.	GENERAL ELECTRIC PART No.
X17		1N295 (0723-01)					1N295
X18		1N295 (0723-01)					1N295
X19		RD9035 (0722-10)					
X20		(Zener)					

ELECTROLYTIC CAPACITORS

ITEM No.	RATING		REPLACEMENT DATA						
	CAP.	VOLT.	Raytheon PART No.	AEROVOX PART No.	CORNELL-DUBILIER PART No.	GENERAL ELECTRIC PART No.	GENERAL INSTRUMENT PART No.	MALLORY PART No.	SPRAGUE PART No.
C1	500	20	0534-22		BR500-25		TD-500-25		
C2	250	25	0534-23	PRS1280	BR250-25	QT1-28	BL2361	TC50025	TVA-1208
C3	100	15	0529-95	BCD15100	ECSP100-15	MT1-19	BL1940	TT15X100	TL-1162
C4	12	25	0520-90	BCD25010	ECSP10-25	MT1-9	BL1461	PET1760	VL-1207
C5	5	50	0520-91	BCD50005	ECSP5-75	MT1-3	BL1470	TT50X5	VL-1304
C6	25 †	15		BCD15025	ECSP25-15	MT1-10	BL1441	TT15X25	VL-1170
C7	3	50	0515-80	BCD50003	NLW3-50	MT1-3		TT50X3	VL-1302
C8	100	6	0529-83	BCD6100	ECSP100-15	MT1-18	BL1720	PET1400	VL-1100
C9	3	50	0515-80	BCD50003	NLW3-50	MT1-3		TT50X3	VL-1302
C10	25	15	0522-95	BCD15025	ECSP25-15	MT1-10	BL1441	TT15X25	VL-1170
C11	3	50	0515-80	BCD50003	NLW3-50	MT1-3		TT50X3	VL-1302
C12	100	6	0529-83	BCD6100	ECSP100-15	MT1-18	BL1720	PET1400	VL-1100
C13	3	50	0515-80	BCD50003	NLW3-50	MT1-3		TT50X3	VL-1302

† Alternate Value 5mfd 15V.

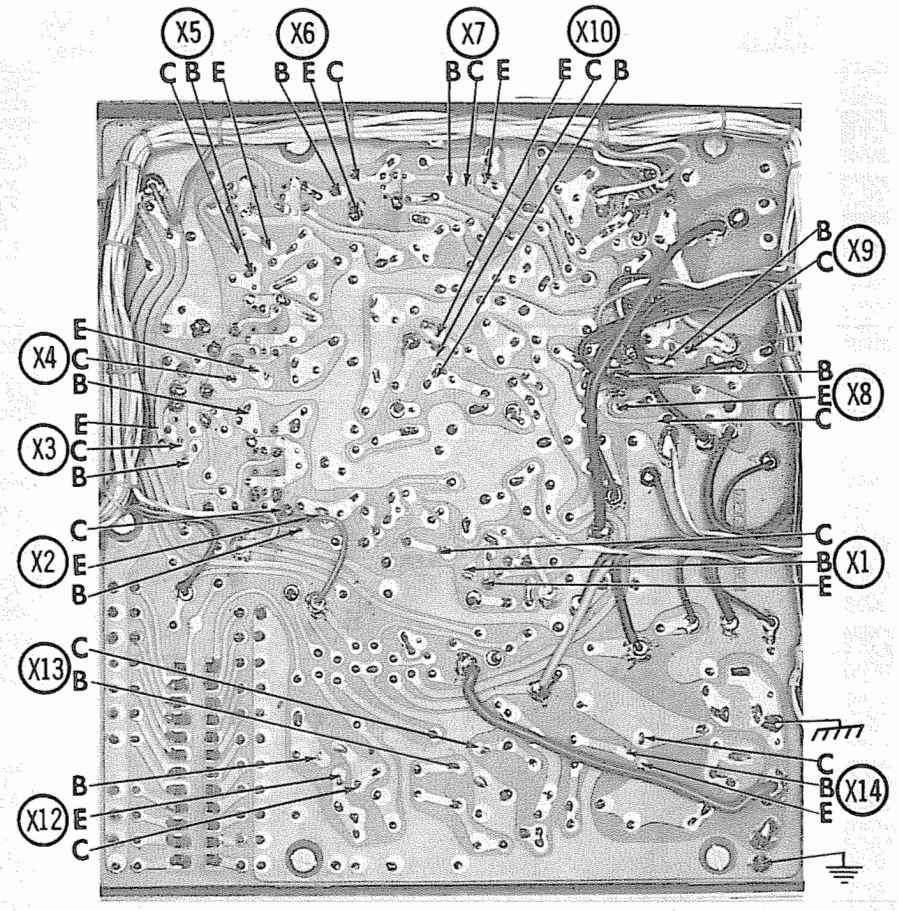

PARTS LIST AND DESCRIPTION (CONTINUED)

FIXED CAPACITORS

ITEM No.	RATING	REMARKS	REPLACEMENT DATA					
			AEROVOX PART No.	CENTRALAB PART No.	CORNELL-DUBILIER PART No.	ELMENCO PART No.	MALLORY PART No.	SPRAGUE PART No.
C14	.02 50V		TTD-02	CK-203	H3		TA120	TG-S20
C15	.005 30V		TTD-005	CK-502	H1		TA250	TG-D50
C16	25 NPO 10%		NPO-DI 25	DTZ-25	C10Q25C	CCTO-240	CNO425	10TCC-Q25
C17	.02 50V		TTD-02	CK-203	H3		TA120	TG-S20
C18	.02 50V		TTD-02	CK-203	H3		TA120	TG-S20
C19	.02 50V		TTD-02	CK-203	H3		TA120	TG-S20
C20	.02 50V		TTD-02	CK-203	H3		TA120	TG-S20
C21	25 NPO 10%		NPO-DI 25	DTZ-25	C10Q25C	CCTO-240	CNO425	10TCC-Q25
C22	.02 50V		TTD-02	CK-203	H3		TA120	TG-S20
C23	.02 50V	(.05) †	TTD-02	CK-203	H3		TA120	TG-S20
C24	.05 50V		TTD-05	CK-503	H5		TA150	TG-S50
C25	.02 50V		TTD-02	CK-203	H3		TA120	TG-S20
C26	25 NPO 10%	(22) †	NPO-DI 25	DTZ-25	C10Q25C	CCTO-240	CNO425	10TCC-Q25
C27	.02 50V		TTD-02	CK-203	H3		TA120	TG-S20
C28	10 NPO 10%		NPO-DI 10	DTZ-10	C10Q1C	CCTO-100	CNO410	10TCC-Q10
C29	6.8pf NPO 10%		NPO-DI 6.8	DTZ-6R8	C10V68C	CCTO-6R8	CNO568	10TCC-V68
C30	6.8pf NPO 10%		NPO-DI 6.8	DTZ-6R8	C10V68C	CCTO-6R8	CNO568	10TCC-V68
C31	.05 50V		TTD-05	CK-503	H5		TA150	TG-S50
C32	.05 50V		TTD-05	CK-503	H5		TA150	TG-S50
C33	6.8pf NPO 10%		NPO-DI 6.8	DTZ-6R8	C10V68C	CCTO-6R8	CNO568	10TCC-V68
C34	.05 50V		TTD-05	CK-503	H5		TA150	TG-S50
C35	.05 50V		TTD-05	CK-503	H5		TA150	TG-S50
C36	6.8pf NPO 10%		NPO-DI 6.8	DTZ-6R8	C10V68C	CCTO-6R8	CNO568	10TCC-V68
C37	.05 50V		TTD-05	CK-503	H5		TA150	TG-S50
C38	56 NPO 10%			TCZ-56		CCTO-560	CNO456	10TCC-Q56
C39	.05 50V		TTD-05	CK-503	H5		TA150	TG-S50
C40	.05 50V		TTD-05	CK-503	H5		TA150	TG-S50
C41	.05 50V		TTD-05	CK-503	H5		TA150	TG-S50
C42	.05 50V		TTD-05	CK-503	H5		TA150	TG-S50
C43	.05 50V		TTD-05	CK-503	H5		TA150	TG-S50
C44	.1 100V		TTD-1	DDA-104			TA010	TH-P10
C45	.1 100V		TTD-1	DDA-104			TA010	TH-P10
C46	.05 50V		TTD-05	CK-503	H5		TA150	TG-S50
C47	.02 50V		TTD-02	CK-203	H3		TA120	TG-S20
C48	.01 50V		TTD-01	CK-103	H2		TA110	TG-S10
C49	.005 30V		TTD-005	CK-502	H1		TA250	TG-D50
C50	.02 50V		TTD-02	CK-203	H3		TA120	TG-S20

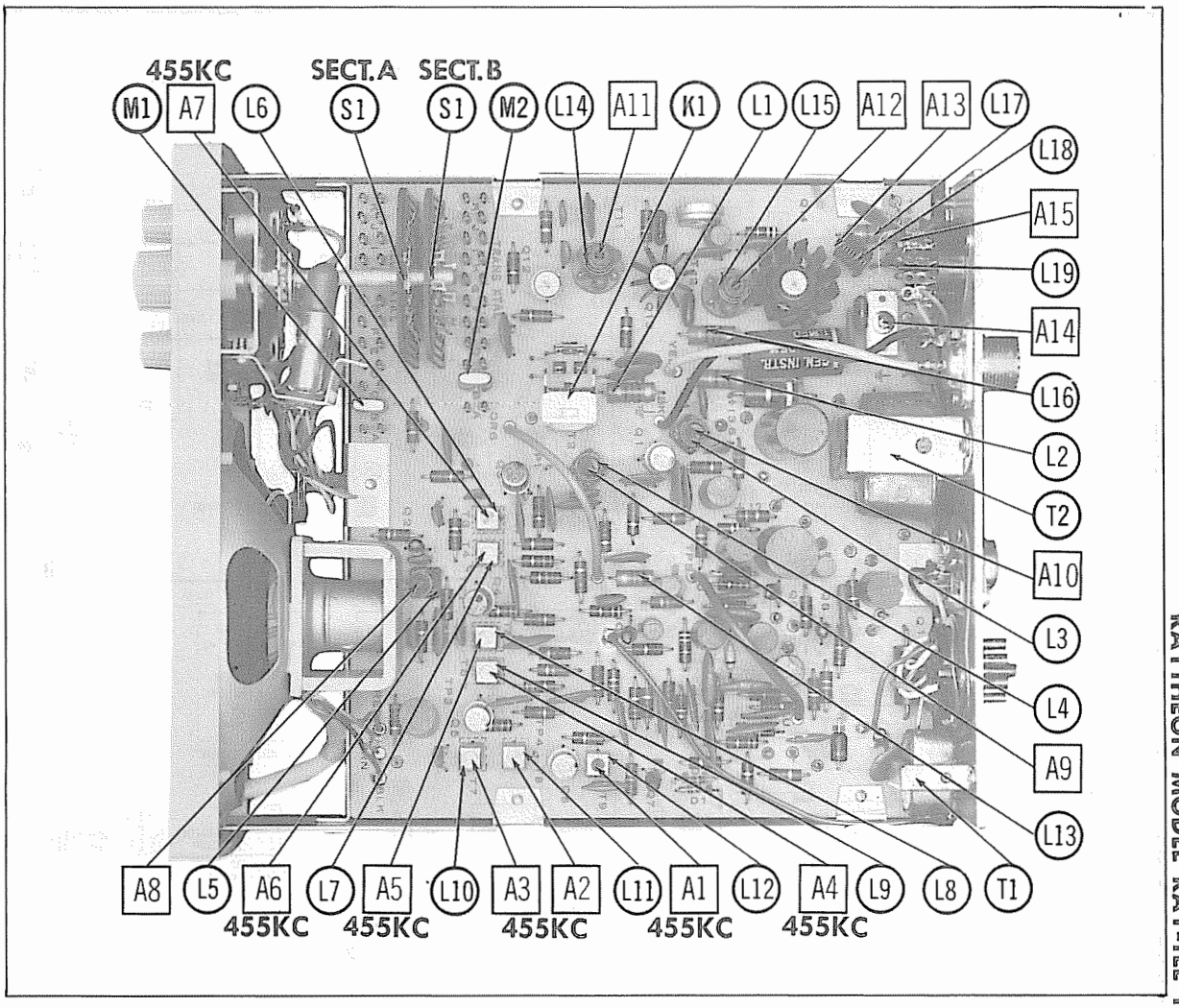

PARTS LIST AND DESCRIPTION (CONTINUED)

FIXED CAPACITORS (cont)

ITEM No.	RATING	REMARKS	REPLACEMENT DATA					
			AEROVOX PART No.	CENTRALAB PART No.	CORNELL-DUBILIER PART No.	ELMENCO PART No.	MALLORY PART No.	SPRAGUE PART No.
C51	.02 50V		TTD-02	CK-203	H3		TA120	TG-S20
C52	.02 50V		TTD-02	CK-203	H3		TA120	TG-S20
C53	10 NPO 10%		NPO-DI 10	DTZ-20	C10Q1C	CCTO-100	CNO410	10TCC-Q10
C54	100 10%		DI-100	DD-101	LA10T1-S3	CCD-101	GP310	10TS-T10
C55	500 5%		ADM-15-501	CPR-510J	CD19F511J	DM-15-501J		MS-35
C56	.02 50V		TTD-02	CK-203	H3		TA120	TG-S20
C57	47 10%		ADM-15-470	CPR-47J	CD10E470J	DM-15-470K	CNO447	MS-447
C58	.001 10%		DI-1000	DD-102	CD19F102K	CCD-102	GP210	10TS-D10
C59	.05 50V		TTD-05	CK-503	H5		TA150	TG-S50
C60	1mfd 200V				MPY2W1		DE2105E	155P1.0-200
C61	300 2%	(430) †			CD15F301G	DM-15-301G		
C62	14-150	#0551-12				42-424		
C63	560 5%		ADM-19-561	CPR-560J	CD19F561J	DM-15-561J		MS-356
C64	.02 50V		TTD-02	CK-203	H3		TA120	TG-S20
C65	.1 100V		TTD-1	DDA-104			TA010	TH-P10
C66	.05 50V		TTD-05	CK-503	H5		TA150	TG-S50
C67	.1 100V		TTD-1	DDA-104			TA010	TH-P10
C68	560 10%		DI-560	DD-561	CD19F561K	CCD-561	GP356	10TS-T56

† Alternate Value.
# Raytheon Part Number.

CONTROLS

All wattages 1/2 watt, or less, unless otherwise listed.

ITEM No.	USE	RESISTANCE	REPLACEMENT DATA				
			Raytheon PART No.	CENTRALAB PART No.	CLAROSTAT PART No.	CTS-IRC PART No.	MALLORY PART No.
R1	Volume & Power Switch	5000Ω	240-7184P1	F2-5000, SSK012, KR-1, or (B-11, KR-1)		Q13-114, 76-1, or (BU2, CF60, SS1, GC)*	UA53A, SK750, US41 or (RU53A, SL38, SK750, US41) or (U12, US26)
R2	Squelch & ANL Switch	10K	240-7183P1	F1-10K, SSK012, KR-3 or (B-14, KR-3)	A47-10K-S, KSS-3, SWE-20	Q11-116, 76-4, or (BU2, CF9, SS1, VF)*	UA14L, SK750, US43 or (RU14L, SL38, SK750, US43 or (U20, US28)
R3	Modulation Level	15K					MTC153L1

* "SNAPTROL"

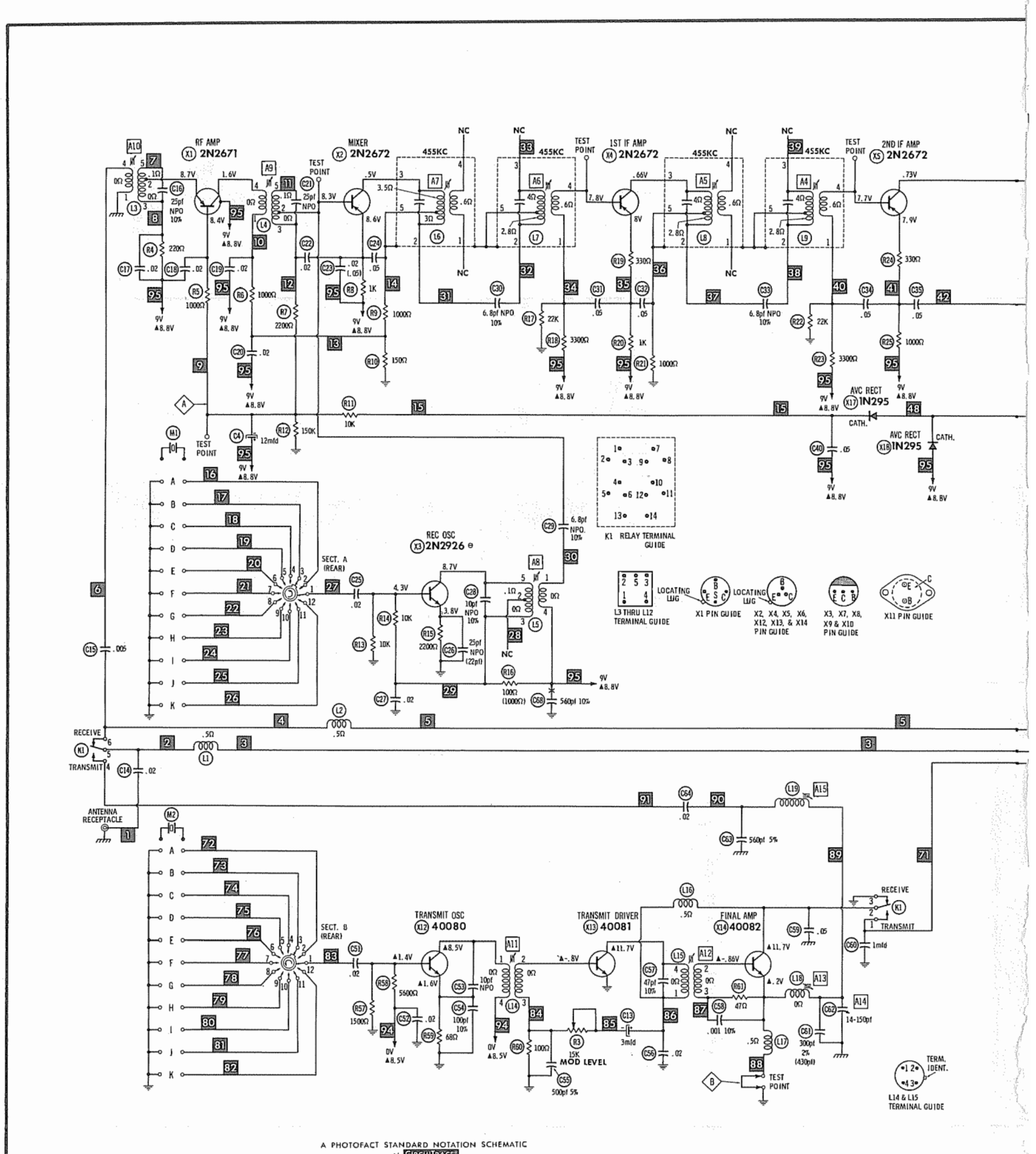

A PHOTOFACT STANDARD NOTATION SCHEMATIC
with CIRCUITRACE

X8 VOLTAGES MEASURED IN SQUELCH POSITION.
R44 IS PARALLELED WITH 22MFD @ 15V IN LATE PRODUCTION.

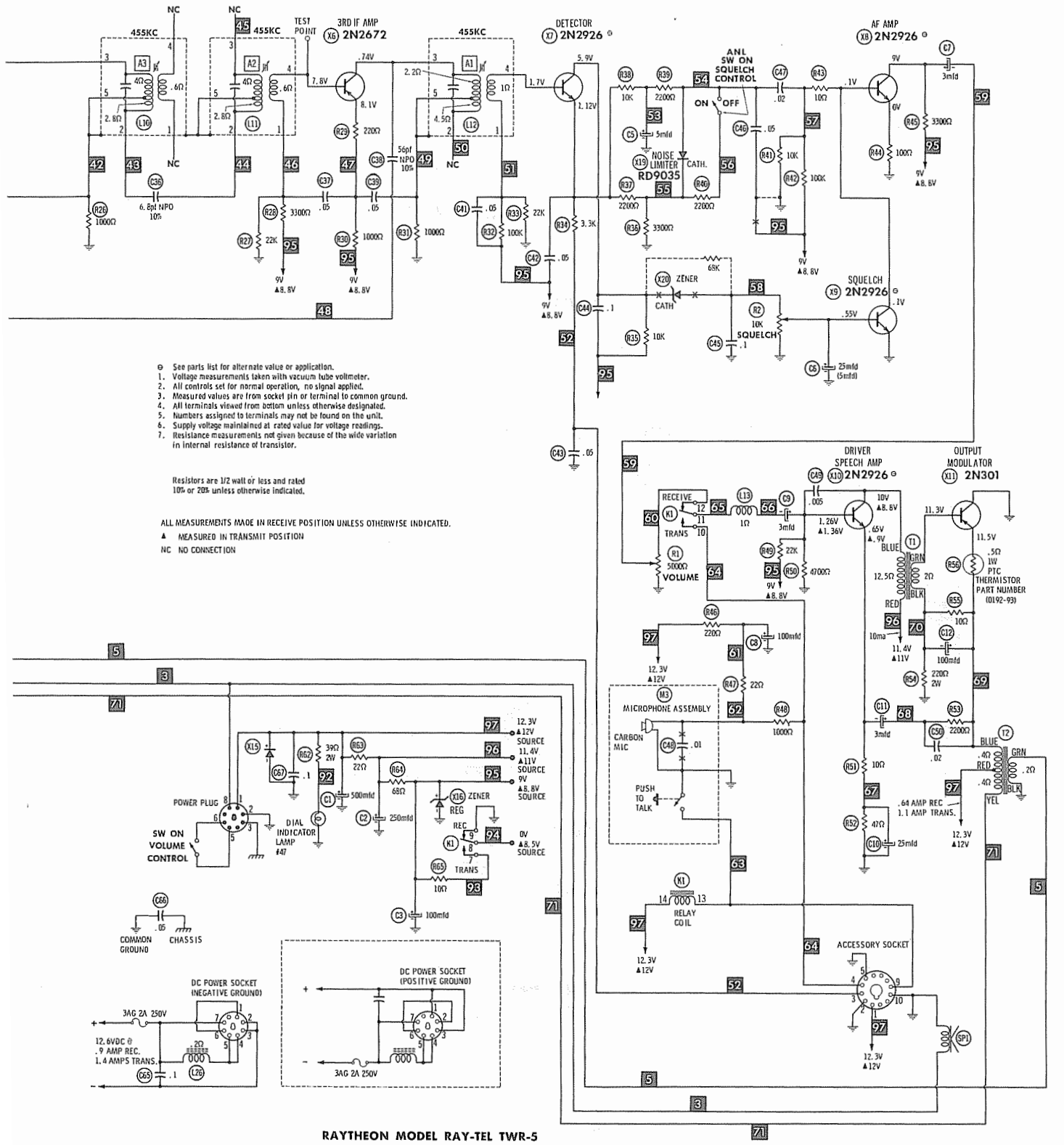

⊖ See parts list for alternate value or application.
1. Voltage measurements taken with vacuum tube voltmeter.
2. All controls set for normal operation, no signal applied.
3. Measured values are from socket pin or terminal to common ground.
4. All terminals viewed from bottom unless otherwise designated.
5. Numbers assigned to terminals may not be found on the unit.
6. Supply voltage maintained at rated value for voltage readings.
7. Resistance measurements not given because of the wide variation in internal resistance of transistor.

Resistors are 1/2 watt or less and rated 10% or 20% unless otherwise indicated.

ALL MEASUREMENTS MADE IN RECEIVE POSITION UNLESS OTHERWISE INDICATED.
▲ MEASURED IN TRANSMIT POSITION
NC NO CONNECTION

RAYTHEON MODEL RAY-TEL TWR-5

PARTS LIST AND DESCRIPTION (CONTINUED)

COILS (RF-IF)

ITEM No.	USE	REPLACEMENT DATA					
		Raytheon PART No.	MEISSNER PART No.	MERIT PART No.	MILLER PART No.	STANCOR PART No.	WORKMAN PART No.
L1	RF Choke (15uh)	375-7217P1			9340-24	RTC-8524	T862
L2	RF Choke (15uh)	375-7217P1			9340-24	RTC-8524	T862
L3	Antenna Input	375-7216P4					
L4	RF	375-7216P3					
L5	Rec. Osc. Coupling	375-7216P3					
L6	1st IF (455KC)	0075-06					
L7	2nd IF (455KC)	0075-05					
L8	3rd IF (455KC)	0075-05					
L9	4th IF (455KC)	0075-05					
L10	5th IF (455KC)	0075-05					
L11	6th IF (455KC)	0075-05					
L12	7th IF (455KC)	0075-04					
L13	RF Choke (15uh)	0013-01			9330-28	RTC-8524	T862
L14	Trans. Osc. Coupling	375-7218P1					
L15	Trans. Driver Coup.	375-7218P1					
L16	RF Choke (15uh)	375-7217P1			9340-24	RTC-8524	T862
L17	RF Choke (15uh)	375-7217P1			9340-24	RTC-8524	T862
L18	Final Loading	375-7219G1					
L19	Ant. Loading	375-7219G2					
L20	RF Choke (6.8uh)	375-7217P2			9330-20		

TRANSFORMER (DRIVER)

ITEM No.	TURNS RATIO		REPLACEMENT DATA					NOTES
	PRI.	SEC.	Raytheon PART No.	MERIT PART No.	STANCOR PART No.	THORDARSON PART No.	TRIAD PART No.	
T1	6.6	1	1294-53					

TRANSFORMER (AUDIO OUTPUT)

ITEM No.	IMPEDANCE		REPLACEMENT DATA					NOTES
	PRI.	SEC.	Raytheon PART No.	MERIT PART No.	STANCOR PART No.	THORDARSON PART No.	TRIAD PART No.	
T2	70Ω Tap @ 15Ω	3-4Ω	1294-54					

SPEAKER

ITEM No.	TYPE	REPLACEMENT DATA		NOTES
		Raytheon PART No.	QUAM PART No.	
SP1	3" x 5" PM 3-4Ω	0710-11	35A05	

FUSES

ITEM No.	TYPE	RATING	REPLACEMENT DATA					
			Raytheon PART No.		LITTELFUSE PART No.		BUSS PART No.	
			FUSE	HOLDER	FUSE	HOLDER	FUSE	HOLDER
F1	3AG	2 Amp 250V	0667-00	343-7174 P1	312002	155020	AGC 2	HDJ-A

MISCELLANEOUS

ITEM No.	PART NAME	Raytheon PART No.	NOTES
K1	Trans.-Rec. Relay	0585-10	4PDT-12VDC PC Mounting
M1	Receive Crystal		
M2	Transmit Crystal		
M3	Microphone Ass'y.	MI-3PR	(Carbon)
S1	Channel Sel. Switch	228-7193P1	12-Position, Wafer, PC Mounting

CABINETS & CABINET PARTS

(When Ordering Specify Model, Chassis & Color)

ITEM	PART No.
Bezel	7270-1002P2
Cabinet	7268-1005G1
Dial Plate	7268-1003P1

ITEM	PART No.
Knob - Channel Selector	0775-04
Knob - Volume, Squelch	7268-5008G1

WIRING DATA

General-use Hook-up Wire .... Use BELDEN No. 8530 (Solid) Available in 12 Colors
8524 (Stranded) Available in 12 Colors)
Shielded Antenna Lead ..... Use BELDEN No. 8214 Lowest Loss (RG-8/U Type)
8237 Low Loss (RG-8/U)
8240 (Solid) Miniature (RG-58/U)
8259 (Stranded) Miniature (RG-58A/U)
Coiled Microphone Cable ..... Use BELDEN No. 8499 Single Conductor Shielded (Neoprene)
8498 Single Conductor Shielded (Vinyl)
Ignition Noise Suppression .... Use BELDEN No. 7300-Series Spark-Plug Sets
Bonding Strap ..... Use BELDEN No. 8661 (3/8 In.)

PHOTOFACT®

TRADE NAME:	Kaar Models 6/117TR333, 6/117TR333B 12/117TR333, 12/117TR333B, 32/TR333B
SUPPLIER:	For Current Address, see Master Index
TYPE SET:	9 Tube Transceiver
POWER SUPPLY:	6 (or) 12 (or) 32 Volts DC(Storage Battery) or 110 — 120 Volts AC, 60 Cycles
RATING:	61 Watts, .59 Amp. @ 117VAC (Trans.) 55 Watts, .53 Amp. @ 117VAC (Rec.) 4.5 Amp. @ 12.6VDC (Trans.) 4.0 Amp. @ 12.6VDC (Rec.)
TUNING RANGE:	Any 8 CB Channels 1 thru 23 Some versions have 9 transmitter channels and a continuously variable receiver.

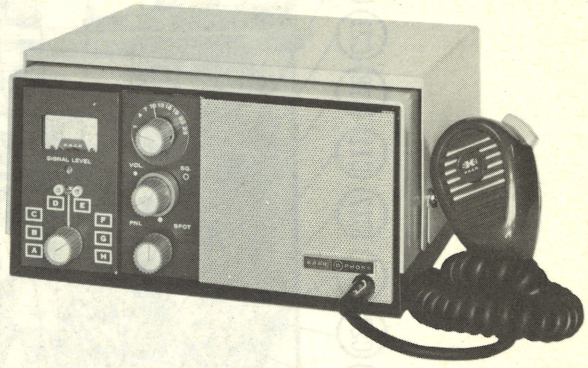

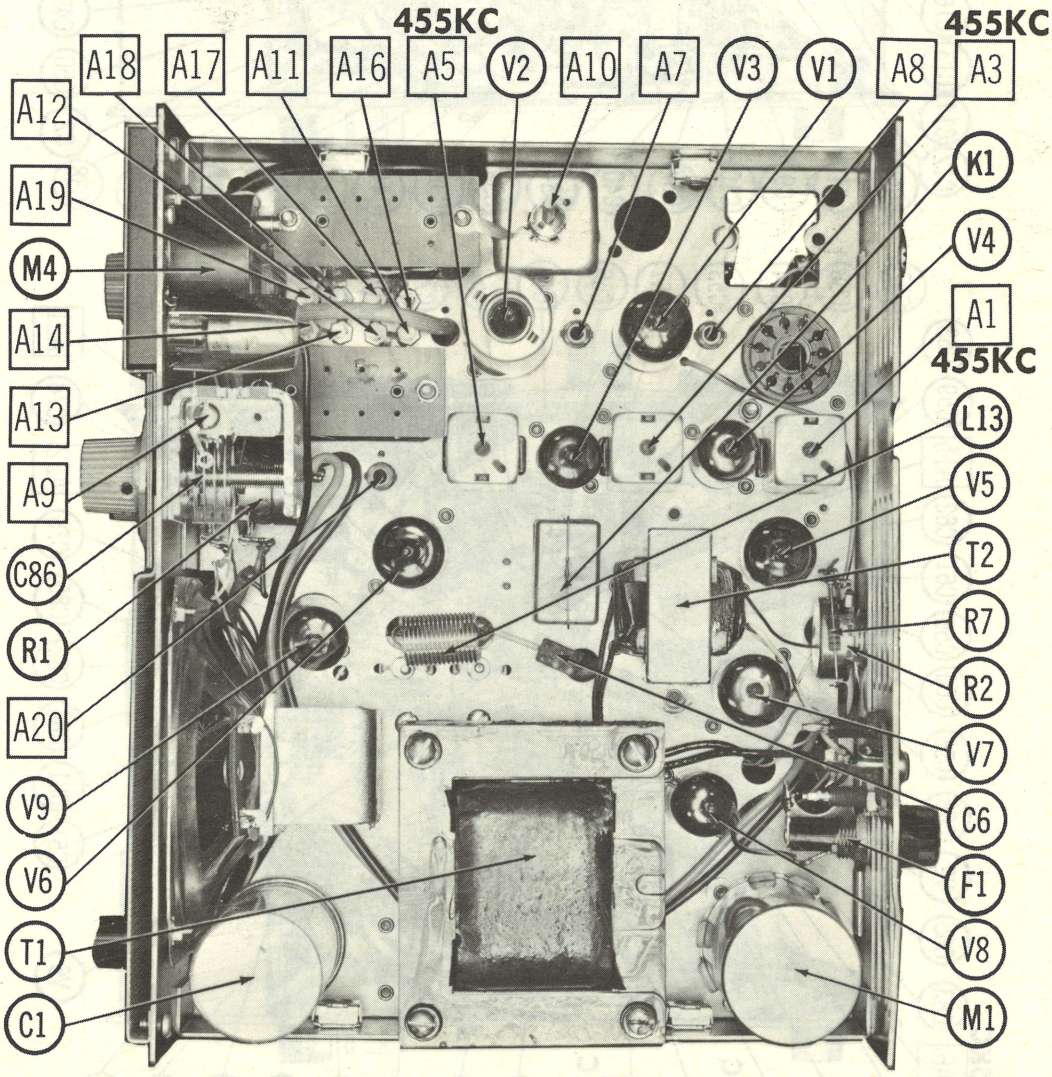

KAAR MODEL 6/117TR333, B, 12/117TR333, B, 32/TR333B

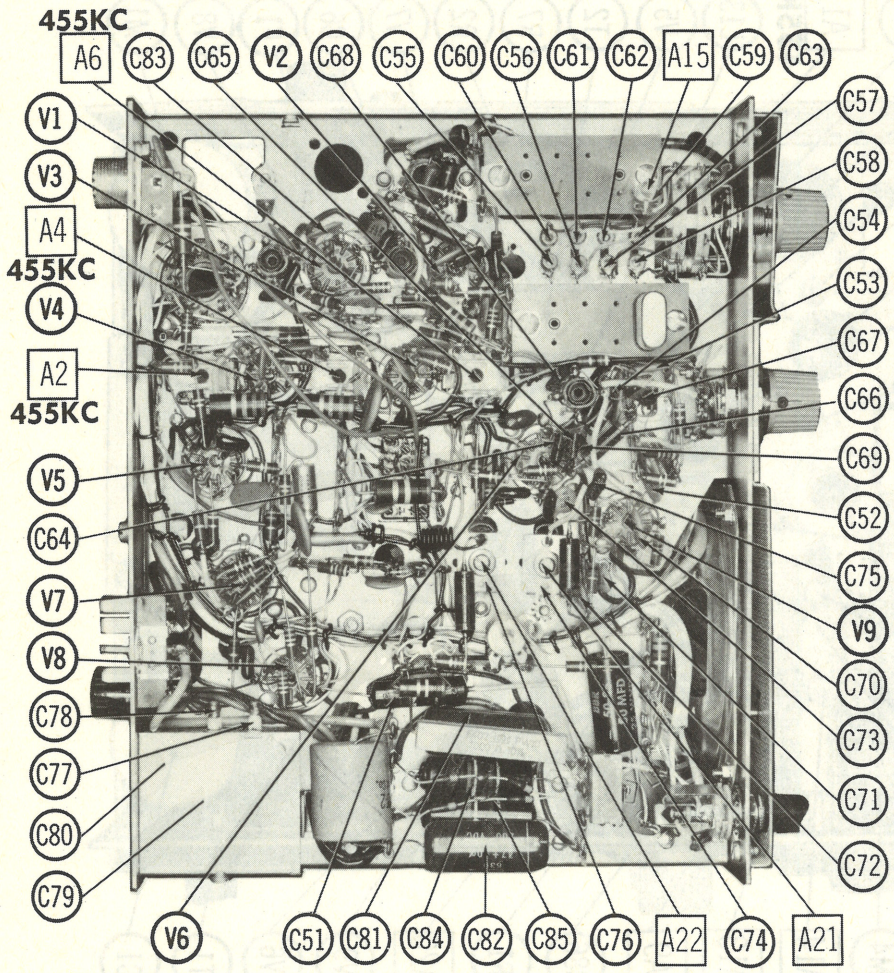
455KC
A6
C83
C65
V2
C68
C55
C60
C56
C61
C62
A15
C59
C63
V1
V3
A4
455KC
V4
A2
455KC
V5
C64
V7
V8
C78
C77
C80
C79
V6
C51
C81
C84
C82
C85
C76
A22
C74
A21
C57
C58
C54
C53
C67
C66
C69
C52
C75
V9
C70
C73
C71
C72

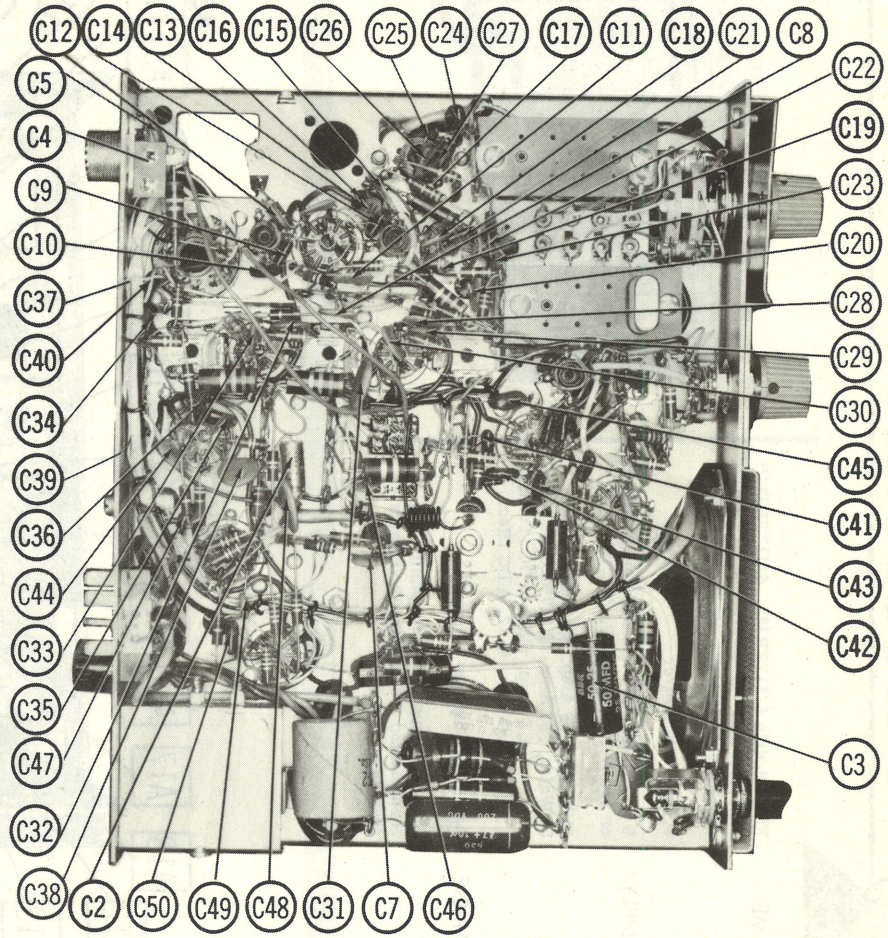
C12
C14
C13
C16
C15
C26
C25
C24
C27
C17
C11
C18
C21
C8
C5
C4
C9
C10
C37
C40
C34
C39
C36
C44
C33
C35
C47
C32
C38
C2
C50
C49
C48
C31
C7
C46
C22
C19
C23
C20
C28
C29
C30
C45
C41
C43
C42
C3

ALIGNMENT INSTRUCTIONS

Suggested Alignment Tools:

A1 thru A6	GENERAL CEMENT #5097, 8727	WALSCO #2515
A7, A8, A20	GENERAL CEMENT #8606, 8606L, 8869	WALSCO #2543, 2544, 2588
A9, A11 thru A19, A21, A22	GENERAL CEMENT #8868, 9087, 9089	WALSCO #2528, 2541, 2587

RECEIVER ALIGNMENT

Connect a DC VTVM between point (A) and chassis. Set to indicate negative voltage.

SIGNAL GENERATOR	CHANNEL	ADJUST	REMARKS
High side thru .01mfd to pin 2 (grid) of V2 (Mixer), low side to chassis. Tune to 455KC (Unmod.).	Any	A1 thru A6	Adjust for maximum.
High side to antenna receptacle, low side to chassis. Tune to 27.085MC (Unmod.).	11 Crystal Controlled	A7, A8	Adjust for maximum.
For Tunable Models only — Set Channel Selector to the center (or tunable) position.			
High side to antenna receptacle, low side to chassis. Tune to 27.085MC.	11 (Tunable)	A9, A10	Adjust for maximum.
High side to antenna receptacle, low side to chassis. Tune to 26.965MC.	1 (Tunable)	A10	Adjust for maximum. Repeat so that channel 1 coincides with 26.965MC. on the front dial and channel 11 coincides with 27.085MC.
High side to antenna, low side to chassis. Set at 27.225MC (Unmod.)	22 (Tunable)	A9	Adjust for maximum. Recheck channels 1 and 11 for proper dial calibration.

TRANSMITTER ALIGNMENT

ONLY THOSE PERSONS PROPERLY LICENSED ARE PERMITTED TO MAKE REPAIRS OR ADJUSTMENTS WHICH MAY RESULT IN ILLEGAL OPERATION. (REFER TO FCC RULES AND REGULATIONS PART 95, SUBPART D, SECTION 95.95).

The frequency of the transmitter should be checked periodically with a secondary frequency standard to insure proper and legal operation.

Best results will be obtained when adjusting the final RF output circuit if the antenna normally used is connected and the chassis is as nearly in the cabinet as possible.

Connect either 50Ω dummy load or the normally used antenna system.

INDICATOR	ADJUST	REMARKS
Frequency Meter	A11 thru A19	Adjust for proper frequency of the respective channel.
Field Strength Meter	A20	Adjust for maximum output on each channel used. Key Transmitter several times on each channel used to insure oscillator starting.
Connect a 0-50DC milliammeter to the Black (-) and red (+) jacks on the chassis rear panel. Connect a DC VTVM from the black jack to chassis.	A21, A22	Adjust A21 for MINIMUM (plate) current. Adjust A22 approximately 20MA (plate) current with VTVM reading approximately 250V. Repeat as required for 5 Watts input.

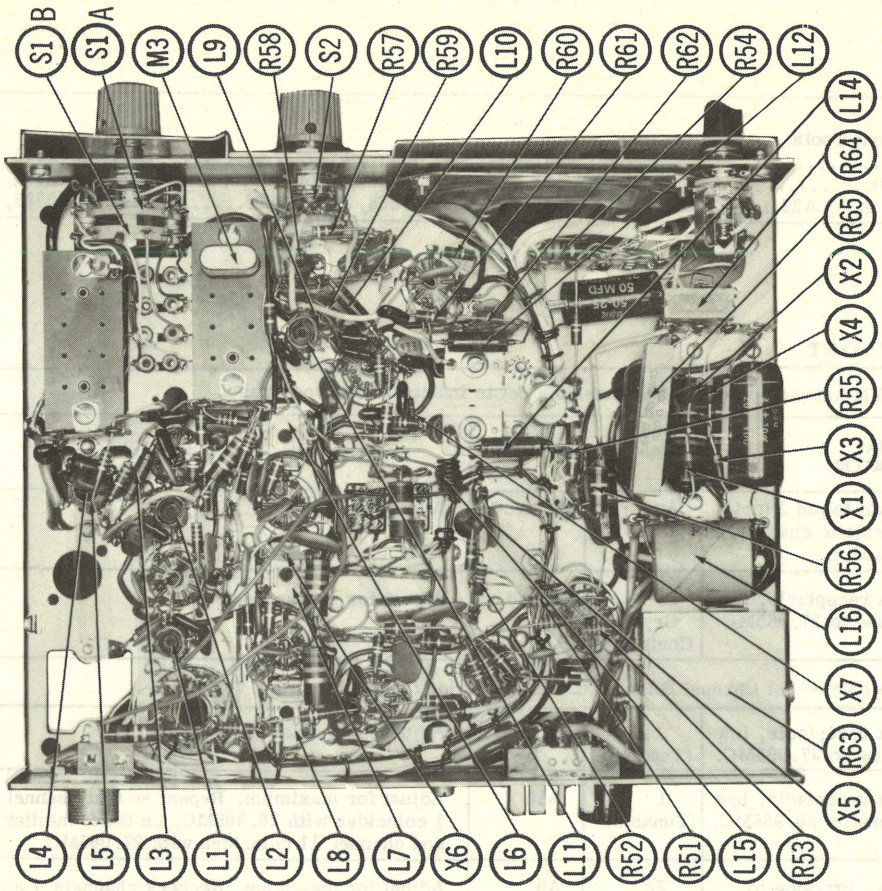
S1 B
S1 A
M3
L9
R58
S2
R57
R59
L10
R60
R61
R62
R54
L12
L14
R64
R65
X2
X4
R55
X3
X1
R56
L16
X7
R63
X5
L4
L5
L3
L1
L2
L8
L7
X6
L6
L11
R52
R51
L15
R53

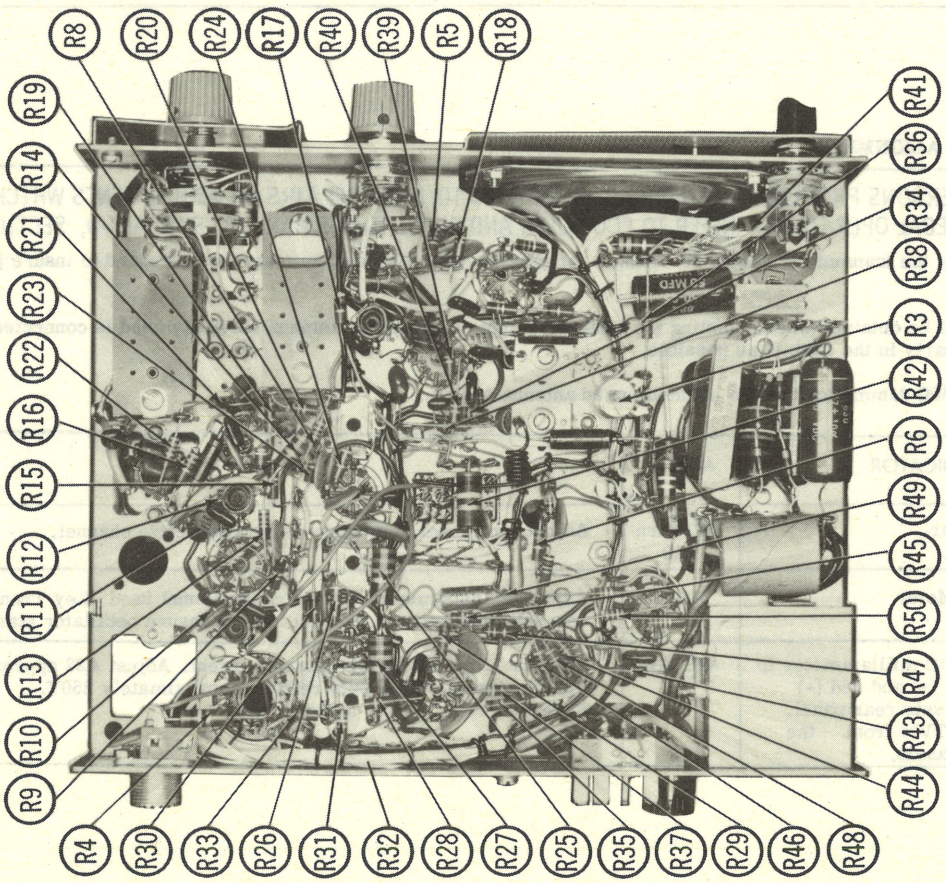
R8
R20
R24
R17
R40
R39
R5
R18
R19
R14
R21
R23
R22
R16
R15
R12
R11
R13
R10
R9
R41
R36
R34
R38
R3
R42
R6
R49
R45
R50
R47
R43
R44
R4
R30
R33
R26
R31
R32
R28
R27
R25
R35
R37
R29
R46
R48

PARTS LIST AND DESCRIPTION

TUBES

◆ AMPEREX ◆ GENERAL ELECTRIC ◆ RCA ◆ SYLVANIA ◆

ITEM No.	USE	TYPE
V1	RF Amp.	6BS8
V2	Mixer, Rec. Osc.	6EA8
V3	1st IF Amp.	6BA6
V4	2nd IF Amp.	6BA6
V5	Det. -AVC-Squelch Rect. - Noise Limiter	6BJ7
V6	Noise Amp. -Transmit Osc.	12AV7
V7	AF Amp. -Speech Amp. - Squelch Control	6JV8 ①
V8	Output - Modulator	6AQ5A
V9	Final Amp.	6AQ5A

① Use Type 12AX7 in sets with Serial Numbers 2511 or higher.

POWER RECTIFIERS & SIGNAL DIODES

ITEM No.	MEASURED CURRENT	ORIGINAL Part or Type No.	RECTIFIERS				DIODES
			GENERAL ELECTRIC PART No.	MALLORY PART No.	RCA PART No.	SARKES TARZIAN PART No.	GENERAL ELECTRIC PART No.
X1	.046A ▲	1N2071/SD6	1N1697	1N2864 or 1N3195	1N2864 or 1N3195	F6 or 60C	
X2	.046A ▲	1N2071/SD6	1N1697	1N2864 or 1N3195	1N2864 or 1N3195	F6 or 60C	
X3	.046A ▲	1N2071/SD6	1N1697	1N2864 or 1N3195	1N2864 or 1N3195	F6 or 60C	
X4	.046A▲	1N2071/SD6	1N1697	1N2864 or 1N3195	1N2864 or 1N3195	F6 or 60C	
X5		1N60A					1N60
X6		1N659					
X7		1N659					

▲ Transmit

ELECTROLYTIC CAPACITORS

ITEM No.	RATING		REPLACEMENT DATA					
	CAP.	VOLT.	KAAR PART No.	AEROVOX PART No.	CORNELL-DUBILIER PART No.	GENERAL ELECTRIC PART No.	MALLORY PART No.	SPRAGUE PART No.
C1A	■30	450						
B	▲20	450		AFH3-42	CCO330	XC3-29	FP446	TVL-3784
C	▲40	450						
C2	5	50		PTT90	NLW5-50	MT1-3	TT50X5	TE-1303
C3	50	25		PRS1265	BR50-25	QT1-15	TC29	TVA-1206

FIXED CAPACITORS

ITEM No.	RATING	REMARKS	REPLACEMENT DATA					
			AEROVOX PART No.	CENTRALAB PART No.	CORNELL-DUBILIER PART No.	ELMENCO PART No.	MALLORY PART No.	SPRAGUE PART No.
C4	100 5%		ADM-15-101	CPR-100J	CD10F101J	DM-10-101J	CNO310	MS-31
C5	.01		BPD-01	DD-103	BYA10S1	CCD-103	B110	5HK-S10
C6	2.2pf			DTZ-2R2	CD10C020M	DM-10-020K	CNO522	10TCC-V22
C7	.01		BPD-01	DD-103	BYA10S1	CCD-103	B110	5HK-S10
C8	.01		BPD-01	DD-103	BYA10S1	CCD-103	B110	5HK-S10
C9	33 5%		ADM-15-330	CPR-33J	CD20E330J	DM-10-330J	CNO433	MS-433
C10	33 5%		ADM-15-330	CPR-33J	CD10E330J	DM-10-330J	CNO433	MS-433
C11	.01		BPD-01	DD-103	BYA10S1	CCD-103	B110	5HK-S10
C12	.01	(.002) †	BPD-01	DD-103	BYA10S1	CCD-103	B110	5HK-S10
C13	.002		BPD-002	DD-202	BYA10D2	CCD-202	B220	5HK-D20
C14	22 5%	(33) †	ADM-15-220	CPR-22J	C10C220J	DM-10-220J	CNO422	MS-422
C15	.01		BPD-01	DD-103	BYA10S1	CCD-103	B110	5HK-S10
C16	68 5%		ADM-15-680	CPR-68J	CD10F680J	DM-10-680J	CNO468	MS-468
C17	.01		BPD-01	DD-103	BYA10S1	CCD-103	B110	5HK-S10
C18	.01		BPD-01	DD-103	BYA10S1	CCD-103	B110	5HK-S10
C19	1.5pf 10%							
C20	.01		BPD-01	DD-103	BYA10S1	CCD-103	B110	5HK-S10
C21	82 5%		ADM-15-820	CPR-82J	CD10F820J	DM-10-820J	CNO482	MS-482
C22	12 5%		ADM-15-120	TCZ-12	CD10C120J	DM-10-120J	CNO412	MS-412
C23	2.2pf			DTZ-2R2	CD20C020M	DM-10-020K	CNO522	10TCC-V22
C24	220 5%	①	ADM-15-221	CPR-220J	CD10E221J	DM-10-221J	CNO322	MS-322
C25	22 N220 5%	①						10TCR-Q22
C26	12 N1500 5%	①						
C27	47 NPO 5%	①		TCZ-47	C10Q47C		CNO447	10TCC-Q47
C28	.01		BPD-01	DD-103	BYA10S1	CCD-103	B110	5HK-S10
C29	.01		BPD-01	DD-103	BYA10S1	CCD-103	B110	5HK-S10
C30	.01		BPD-01	DD-103	BYA10S1	CCD-103	B110	5HK-S10
C31	.05 100V		TTD-05				TA150	TH-S50
C32	.01		BPD-01	DD-103	BYA10S1	CCD-103	B110	5HK-S10
C33	.01		BPD-01	DD-103	BYA10S1	CCD-103	B110	5HK-S10
C34	100 5%		ADM-15-101	CPR-100J	CD10F101J	DM-10-101J	CNO310	MS-31
C35	100 5%		ADM-15-101	CPR-100J	CD10F101J	DM-10-101J	CNO310	MS-31
C36	10 5%		ADM-15-100	DTZ-10	CD10C100J	DM-10-100J	CNO410	MS-41
C37	.05 100V		TTD-05				TA150	TH-S50
C38	.001 10%		DI-1000	DD-102	JB6D1	CCD-102	GP210	10TS-D10
C39	.01		BPD-01	DD-103	BYA10S1	CCD-103	B110	5HK-S10
C40	220 5%		ADM-15-221	CPR-220J	CD10E221J	DM-10-221J	CNO322	MS-322
C41	68 5%		ADM-15-680	CPR-68J	CD10F680J	DM-10-680J	CNO468	MS-468
C42	150 5%		ADM-15-151	CPR-150J	CD10F151J	DM-10-151J	CNO315	MS-315
C43	100 5%		ADM-15-101	CPR-100J	CD10F101J	DM-10-100J	CNO310	MS-31
C44	.01		BPD-01	DD-103	BYA10S1	CCD-103	B110	5HK-S20
C45	.1mfd 50V		TTD-1	CK-104	H6		TA010	TG-P10
C46	.002		BPD-002	DD-202	BYA10D2	CCD-202	B220	5HK-D20
C47	.1mfd 50V		TTD-1	CK-104	H6		TA010	TG-P10

(CONTINUED ON PAGE 60)

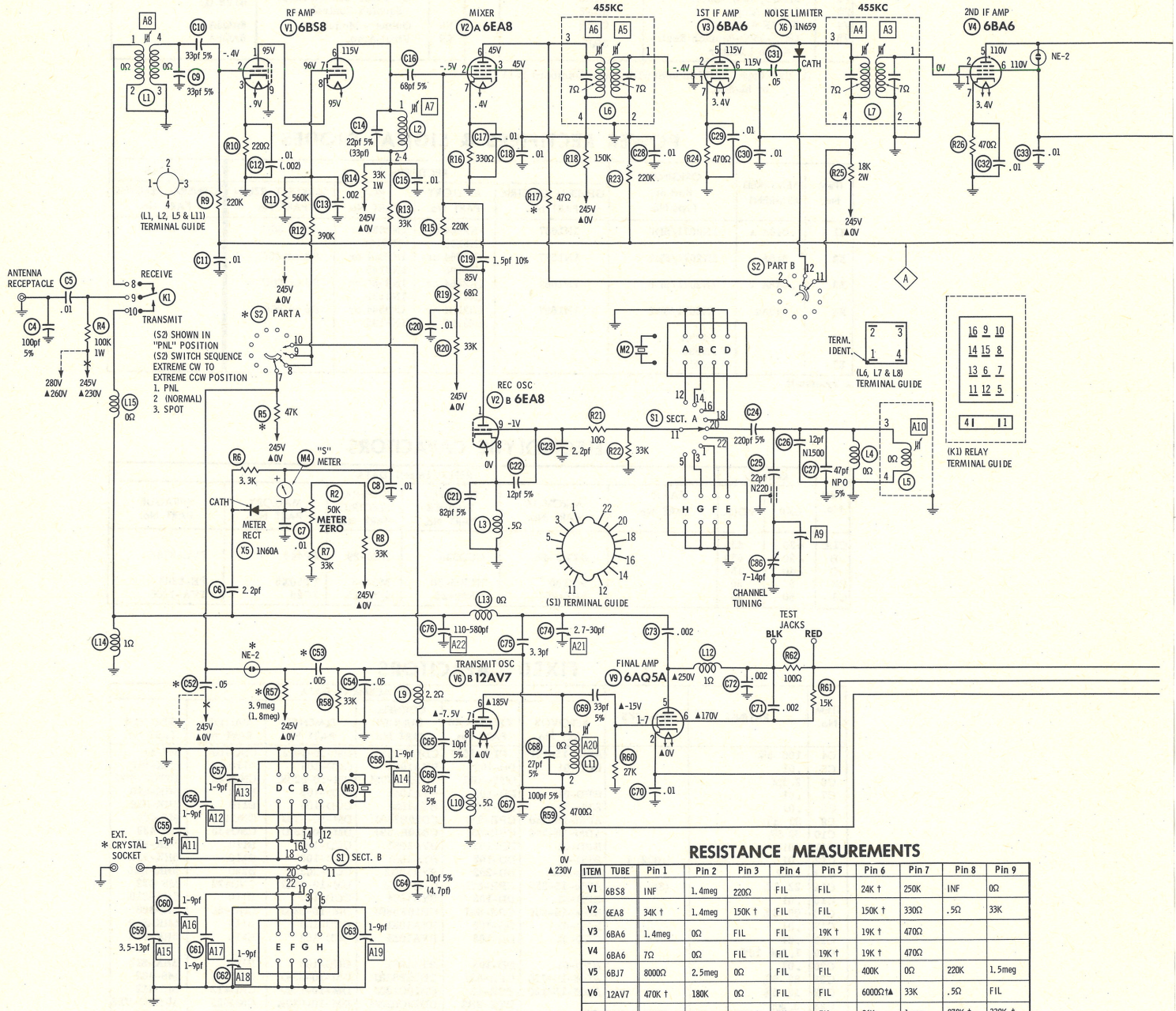

RESISTANCE MEASUREMENTS

ITEM	TUBE	Pin 1	Pin 2	Pin 3	Pin 4	Pin 5	Pin 6	Pin 7	Pin 8	Pin 9
V1	6BS8	INF	1.4meg	220Ω	FIL	FIL	24K †	250K	INF	0Ω
V2	6EA8	34K †	1.4meg	150K †	FIL	FIL	150K †	330Ω	.5Ω	33K
V3	6BA6	1.4meg	0Ω	FIL	FIL	19K †	19K †	470Ω		
V4	6BA6	7Ω	0Ω	FIL	FIL	19K †	19K †	470Ω		
V5	6BJ7	8000Ω	2.5meg	0Ω	FIL	FIL	400K	0Ω	220K	1.5meg
V6	12AV7	470K †	180K	0Ω	FIL	FIL	6000Ω †▲	33K	.5Ω	FIL
V7	6JV8	1200Ω	1.5meg	520K †	FIL	FIL	26K	1meg	270K †	330K †
V8	6AQ5A	330K	330Ω	FIL	FIL	480Ω †	1200Ω †	330K		
V9	6AQ5A	27K	0Ω ▲	FIL	FIL	580Ω †	15K †	27K		
ITEM	TUBE	Pin 1	Pin 2	Pin 3	Pin 4	Pin 5	Pin 6	Pin 7	Pin 8	Pin 9

ALL MEASUREMENTS MADE IN RECEIVE POSITION UNLESS OTHERWISE NOTED.
▲ MEASURED IN TRANSMIT POSITION.
† MEASURED FROM CATHODES OF X2 AND X4.
* USED IN TUNABLE MODELS ONLY
TP TIE POINT

⊖ See parts list for alternate value or application.
1. Voltage measurements taken with vacuum tube voltmeter.
2. All controls set for normal operation, no signal applied.
3. Measured values are from socket pin or terminal to common ground.
4. All terminals viewed from bottom unless otherwise designated.
5. Numbers assigned to terminals may not be found on the unit.
6. Supply voltage maintained at rated value for voltage readings.
Resistors are 1/2 watt or less and rated
10% or 20% unless otherwise indicated.

A PHOTOFACT STANDARD NOTATION SCHEMATIC

SEE ALTERNATE AUDIO-SQUELCH CIRCUIT ON PAGE 61

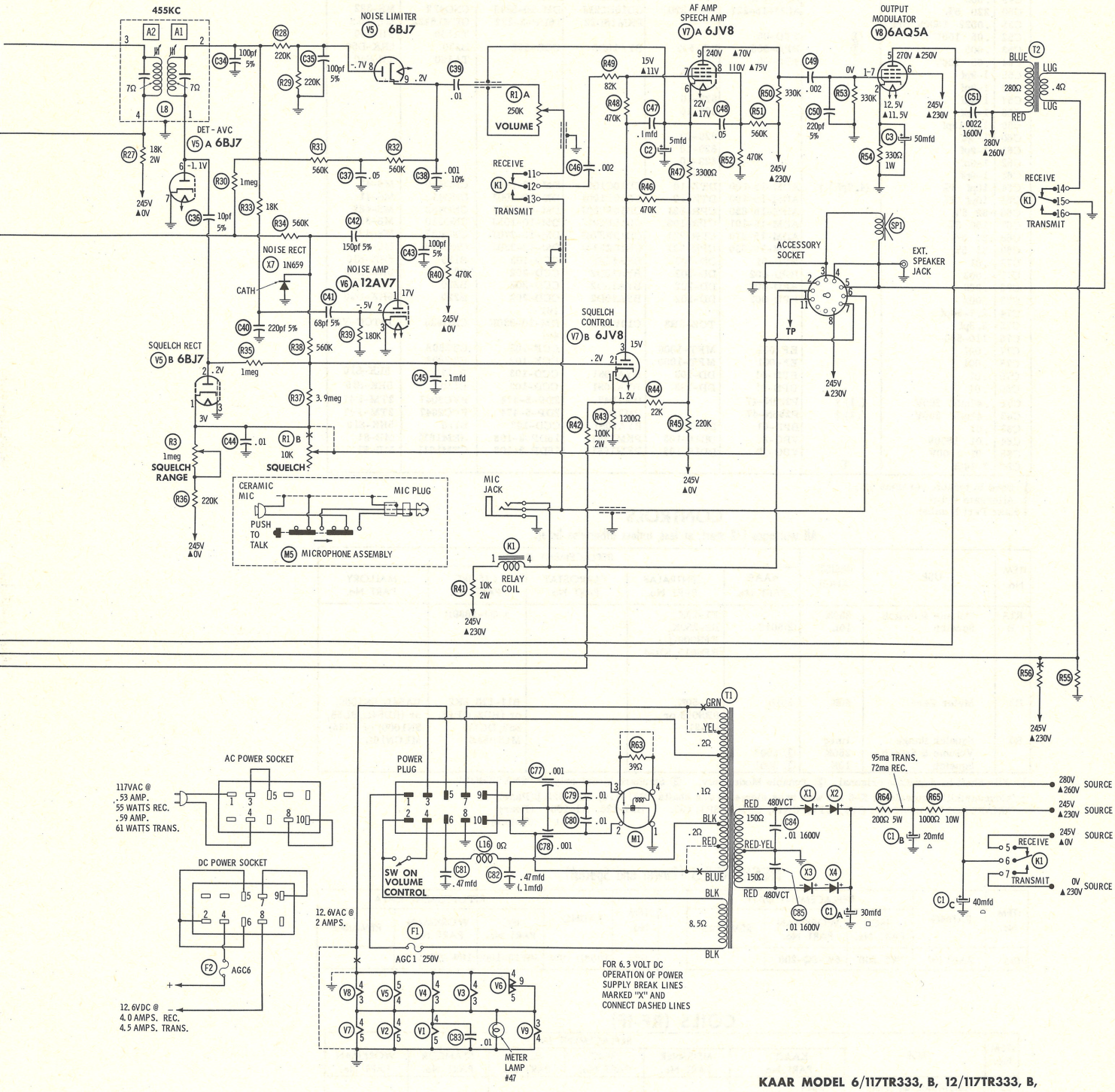

KAAR MODEL 6/117TR333, B, 12/117TR333, B, 32/TR333B

SEE ALTERNATE POWER SUPPLY CIRCUIT ON PAGE 61

PARTS LIST AND DESCRIPTION (CONTINUED)

FIXED CAPACITORS (cont)

ITEM No.	RATING	REMARKS	REPLACEMENT DATA					
			AEROVOX PART No.	CENTRALAB PART No.	CORNELL-DUBILIER PART No.	ELMENCO PART No.	MALLORY PART No.	SPRAGUE PART No.
C48	.05 100V		TTD-05				TA150	TH-S50
C49	.002		BPD-002	DD-202	BYA10D2	CCD-202	B220	5HK-D20
C50	220 5%		ADM-15-221	CPR-220J	CD10E221J	DM-10-221J	CNO322	MS-322
C51	.0022 1600V 10%				PKM16D22	16DP-2-222	GEM16222	MB-D22
C52	.05 100V	①	TTD-05				TA150	TH-S50
C53	.005	①	BPD-005	DD-502	BYA10D5	CCD-502	B250	5HK-D50
C54	.05 100V		TTD-05				TA150	TH-S50
C55	1-9pf			829-10				
C56	1-9pf			829-10				
C57	1-9pf			829-10				
C58	1-9pf			829-10				
C59	3.5-13pf	①						
C60	1-9pf			829-10				
C61	1-9pf			829-10				
C62	1-9pf			829-10				
C63	1-9pf			829-10				
C64	10pf 5%	(4.7pf) †	ADM-15-100	DTZ-10	CD10C100J	DM-10-100J	CNO410	MS-41
C65	10pf 5%		ADM-15-100	DTZ-10	CD10C100J	DM-10-100J	CNO410	MS-41
C66	82 5%		ADM-15-820	CPR-82J	CD10F820J	DM-10-820J	CNO482	MS-482
C67	100 5%		ADM-15-101	CPR-100J	CD10F101J	DM-10-101J	CNO310	MS-310
C68	27 5%		ADM-15-270	CPR-27J	CD10E270J	DM-10-270J	CNO427	MS-427
C69	33 5%		ADM-15-330	CPR-33J	CD10E330J	DM-10-330J	CNO433	MS-433
C70	.01		BPD-01	DD-103	BYA10S1	CCD-103	B110	5HK-S10
C71	.002		BPD-002	DD-202	BYA10D2	CCD-202	B220	5HK-D20
C72	.002		BPD-002	DD-202	BYA10D2	CCD-202	B220	5HK-D20
C73	.002		BPD-002	DD-202	BYA10D2	CCD-202	B220	5HK-D20
C74	2.7-30pf					461		
C75	3.3pf			TCZ-3R3	C10V33C	DM-10-030K	CNO533	10TCC-V33
C76	110-580					467		
C77	.001		EF-001	MFT-1000		CCF-102	CT280A	
C78	.001		EF-001	MFT-1000		CCF-102	CT280A	
C79	.01		BPD-01	DD-103	BYA10S1	CCD-103	B-110	5HK-S10
C80	.01		BPD-01	DD-103	BYA10S1	CCD-103	B110	5HK-S10
C81	.47mfd 200V	(.1) †	P288N-47		PM2P47	2DP-5-474	PVC2047	2TM-P47
C82	.47mfd 200V	(.1) †	P288N-47		PM2P47	2DP-5-474	PVC2047	2TM-P47
C83	.01		BPD-01	DD-103	BYA10S1	CCD-103	B110	5HK-S10
C84	.01 1600V		VBC-27	DD16-103	PKM16S1	16DP-3-103	GEM1611	MB-S1
C85	.01 1600V		VBC-27	DD16-103	PKM16S1	16DP-3-103	GEM1611	MB-S1
C86	7-14pf	①						

① Used in tunable versions only.
† Alternate Value
# Kaar Part Number.

CONTROLS

All wattages 1/2 watt, or less, unless otherwise listed.

ITEM No.	USE	RESIST-ANCE	REPLACEMENT DATA				
			KAAR PART No.	CENTRALAB PART No.	CLAROSTAT PART No.	CTS-IRC PART No.	MALLORY PART No.
R1A B	Volume & Switch Squelch	250K 10K	②5016	F1-10K, R2-250K, FFS009①, RFS015, KR-4		† QJ-1889R	
R2	Meter Zero	50K	5010	F1-50K, SRS008 or (B-31)		B11-123, SK2, or (BU2, CF12, SS2, DC1)*	UA54L, SN1000, or (RU54L, SL38, SN1000) or (U35)
R3	Squelch Range	1meg				MC105AS	MLCN16L
	Volume & Switch	250K	③ 5003				
	Squelch	10K	③ 5001				

① File Shaft to duplicate origonal. ② Tunable Model only. ③ Standard Model only. * "SNAPTROL"
† "Concenrikit" Equivalent: K-6 Kit with base elements and shafts: B11-116, P22-021①(Panel)
"SNAPTROL" Equivalent: BU5, CF9, CR18, SF1①, SR1, GC. B13-130, R1-100 (Rear)
76-1 (Switch)

RESISTORS (Power and Special)

ITEM No.	RATING	REPLACEMENT DATA		
		IRC PART No.	WORKMAN PART No.	REMARKS
R64	200Ω 5W	PW5-200	5W-SQ-200	

ITEM No.	RATING	REPLACEMENT DATA		
		IRC PART No.	WORKMAN PART No.	REMARKS
R65	1000Ω 10W	PW10-1000	10W-SQ-1000	

COILS (RF-IF)

ITEM No.	USE	REPLACEMENT DATA					
		KAAR PART No.	MEISSNER PART No.	MERIT PART No.	MILLER PART No.	STANCOR PART No.	WORKMAN PART No.
L1	Ant. Matching (1uh)	2214					
L2	RF Plate	2212					
L3	RF Choke (4.7uh)				74F476AP		T819
L4	Osc. Shunt (.47uh)		19-2005	TV-239	4588	RTC-8513	T958
L5	Rec. Osc. (.47uh)	2241					
L6	1st IF (455KC)			BC-352	12-C30	RTC-9275	T607
L7	2nd IF (455KC)			BC-352	12-C30	RTC-9275	T607
L8	3rd IF (455KC)			BC-353	12-C31	RTC-9276	T608
L9	RF Choke (15uh)		19-1006		74F155AP	RTC-8524	T862
L10	RF Choke (4.7uh)				74F476AP		T819
L11	Trans. Osc. Plate	2212					
L12	RF Choke (12uh)				74F125AP		TA343
L13	Final Plate	2213A					
L14	RF Choke (12uh)				74F125AP		TA343
L15	Low Pass Filter	8925-9					
L16	Hash Choke (25uh)						

(CONTINUED ON PAGE 62)

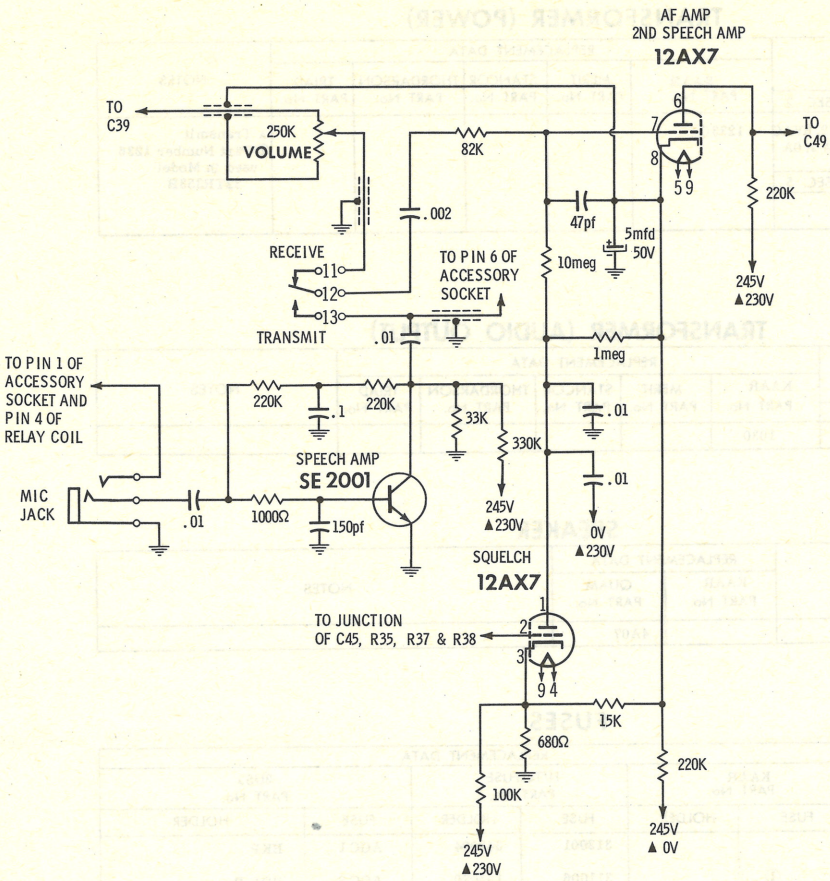

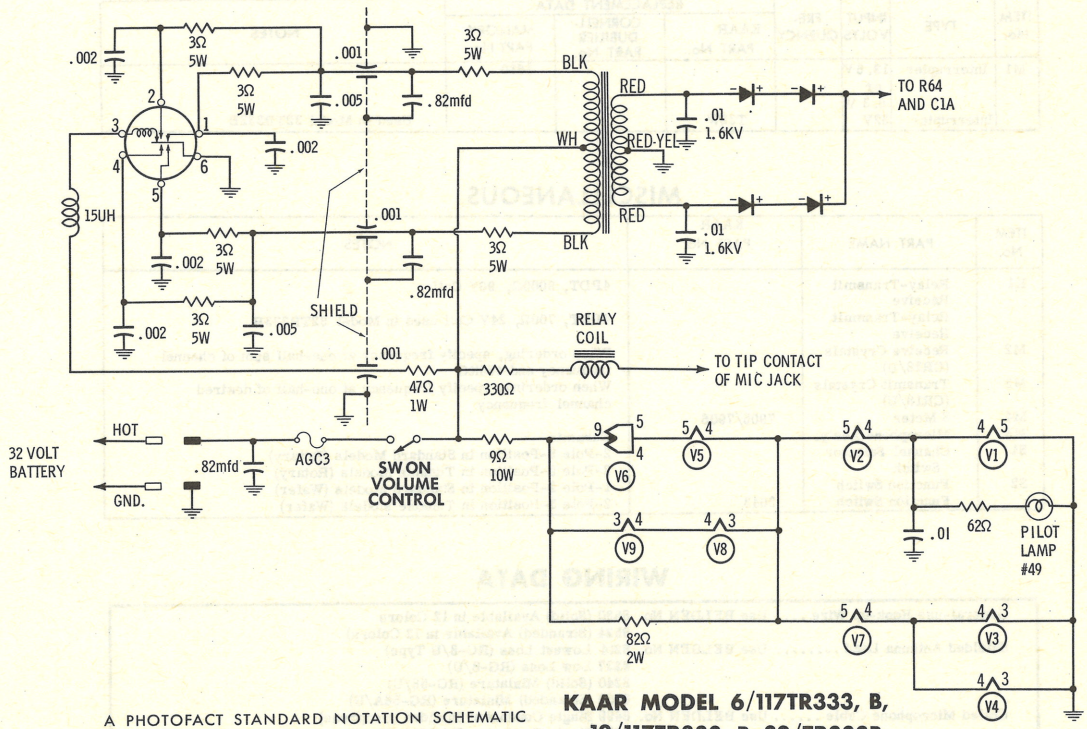

A PHOTOFACT STANDARD NOTATION SCHEMATIC

KAAR MODEL 6/117TR333, B, 12/117TR333, B, 32/TR333B

PARTS LIST AND DESCRIPTION (CONTINUED)

TRANSFORMER (POWER)

ITEM No.	RATING			REPLACEMENT DATA					NOTES
	PRI. 1	SEC. 1	SEC. 2	KAAR PART No.	MERIT PART No.	STANCOR PART No.	THORDARSON PART No.	TRIAD PART No.	
T1	117VAC @ .59A▲	480VCT @ .046A ▲	12.6VAC @ 2.0A	1233 ①					▲ Transmit ① Part Number 1236 used in Model 32TR333B
	PRI. 2	SEC. 4	SEC. 5						
	12.6VDC @ 2.5A ▲								

TRANSFORMER (AUDIO OUTPUT)

ITEM No.	IMPEDANCE		REPLACEMENT DATA					NOTES
	PRI.	SEC.	KAAR PART No.	MERIT PART No.	STANCOR PART No.	THORDARSON PART No.	TRIAD PART No.	
T2	7000Ω	3-4Ω	1030					

SPEAKER

ITEM No.	TYPE	REPLACEMENT DATA		NOTES
		KAAR PART No.	QUAM PART No.	
SP1	4" PM 3-4Ω		4A07	

FUSES

ITEM No.	TYPE	RATING	REPLACEMENT DATA					
			KAAR PART No.		LITTELFUSE PART No.		BUSS PART No.	
			FUSE	HOLDER	FUSE	HOLDER	FUSE	HOLDER
F1	AGC	1A 250V			312001	342004	AGC 1	HKP
F2	AGC	6A	①		311006	155020	AGC 6	HDJ-B
	AGC	15A	②		311015	155020	AGC 15	HDJ-B

① 12 Volt Input. ② 6 Volt Input.

VIBRATOR

ITEM No.	TYPE	INPUT VOLTS	FRE-QUENCY	REPLACEMENT DATA			NOTES
				KAAR PART No.	CORNELL-DUBILIER PART No.	MALLORY PART No.	
M1	Interrupter	12.6V or 6.3 V				1610	
	Interrupter	32V		T32W			Used in Model 32TR333B

MISCELLANEOUS

ITEM No.	PART NAME	KAAR PART No.	NOTES
K1	Relay-Transmit Receive		4PDT, 9000Ω, 90V Coil
	Relay-Transmit Receive		4PDT, 700Ω, 24V Coil used in Model 32TR333B
M2	Receive Crystals (CR18/U)		When ordering, specify frequency at one-half sum of channel frequency and 455KC
M3	Transmit Crystals (CR18/U)		When ordering, specify frequency at one-half of desired channel frequency
M4	S Meter	7905/7906	
M5	Microphone Ass'y.		Ceramic
S1	Channel Selector Switch		2-Pole 8-Position in Standard Models (Rotary) 2-Pole 9-Position in Tunable Models (Rotary)
S2	Function Switch		1-Pole 2-Position in Standard Models (Wafer)
	Function Switch	3043	2-Pole 3-Position in Tunable Models (Wafer)

WIRING DATA

General-use Hook-up Wire .... Use BELDEN No. 8530 (Solid) Available in 12 Colors
8524 (Stranded) Available in 12 Colors)
Shielded Antenna Lead ..... Use BELDEN No. 8214 Lowest Loss (RG-8/U Type)
8237 Low Loss (RG-8/U)
8240 (Solid) Miniature (RG-58/U)
8259 (Stranded) Miniature (RG-58A/U)
Coiled Microphone Cable ..... Use BELDEN No. 8499 Single Conductor Shielded (Neoprene)
8498 Single Conductor Shielded (Vinyl)
Ignition Noise Suppression .... Use BELDEN No. 7300-Series Spark-Plug Sets
Bonding Strap ..... Use BELDEN No. 8661 (3/8 In.)

TRADE NAME: Hallicrafters Model CB-9

SUPPLIER: For Current Address, see Master Index

TYPE SET: 7-Tube Transceiver

POWER SUPPLY: 110 – 120 Volts AC, 60 Cycles (or)
6 Volt Storage Battery

RATING: 60 Watts, .56 Amp. @ 117VAC (Trans.)
53 Watts, .51 Amp. @ 117VAC (Rec.)
5.0 Amp. @ 12.6VDC (Trans.)
4.3 Amp. @ 12.6VDC (Rec.)

TUNING RANGE: Any 6 CB Channels 1 thru 23. Receiver may be continuously tuned.

ALIGNMENT INSTRUCTIONS

Suggested Alignment Tools:
A1 thru A6.....GENERAL CEMENT #5097, 8727..... WALSCO #2515
A7 thru A9, A11 ...GENERAL CEMENT #8606, 8606L, 8869... WALSCO #2543, 2544, 2588
A10.....GENERAL CEMENT #8868, 9087, 9089.... WALSCO #2528, 2541, 2587
A12 thru A14.....GENERAL CEMENT #5000, 8290, 8609

RECEIVER ALIGNMENT

Connect DC VTVM between point (A) and ground, set to indicator negative voltage.

SIGNAL GENERATOR	CHANNEL	ADJUST	REMARKS
High side thru .01mfd to pin 7 (grid) of V2 (Conv.), low side to chassis. Tune to 1650KC (Unmod.).	Any	A1 thru A6	With the cores in the outermost position, adjust for first peak while turning inward.
High side to antenna receptacle, low side to chassis. Tune to 27.085MC (Unmod.).	11	A7, A8, A9	Set VFO Switch to Off position. Adjust for maximum.
High side to antenna receptacle, low side to chassis. Tune to 26.965MC (Unmod.).	1	A10, A11	Set VFO Switch to On position. Set VFO Dial to Channel 1. Preset A10 approximately 1/8 turn from maximum clockwise. Adjust A11 for maximum.
High side to antenna receptacle, low side to chassis. Tune to 27.205MC (Unmod.)	20	A10	Set VFO Dial to Channel 20. Adjust for maximum. Repeat adjustments of A10 and A11 until dial is calibrated.

TRANSMITTER ALIGNMENT

ONLY THOSE PERSONS PROPERLY LICENSED ARE PERMITTED TO MAKE REPAIRS OR ADJUSTMENTS WHICH MAY RESULT IN ILLEGAL OPERATION. (REFER TO FCC RULES AND REGULATIONS PART 95, SUBPART D, SECTION 95.95).

The frequency of the transmitter should be checked periodically with a secondary frequency standard to insure proper and legal operation.

Best results will be obtained when adjusting the final RF output circuit if the antenna normally used is connected and the chassis is as nearly in the cabinet as possible.

Connect either 50Ω dummy load or the normally used antenna system.

INDICATOR	ADJUST	REMARKS
Accurate Frequency Meter.	A12	Adjust for correct frequency.
Field Strength Meter	A13	Adjust for maximum. Adjust L3 primary for maximum and with no tendency to spring back to its previous position.
	A14	Adjust for MINIMUM interference on TV Channel 2 while transmitting.

HOWARD W. SAMS & CO., INC. Indianapolis 6, Indiana

  RY013

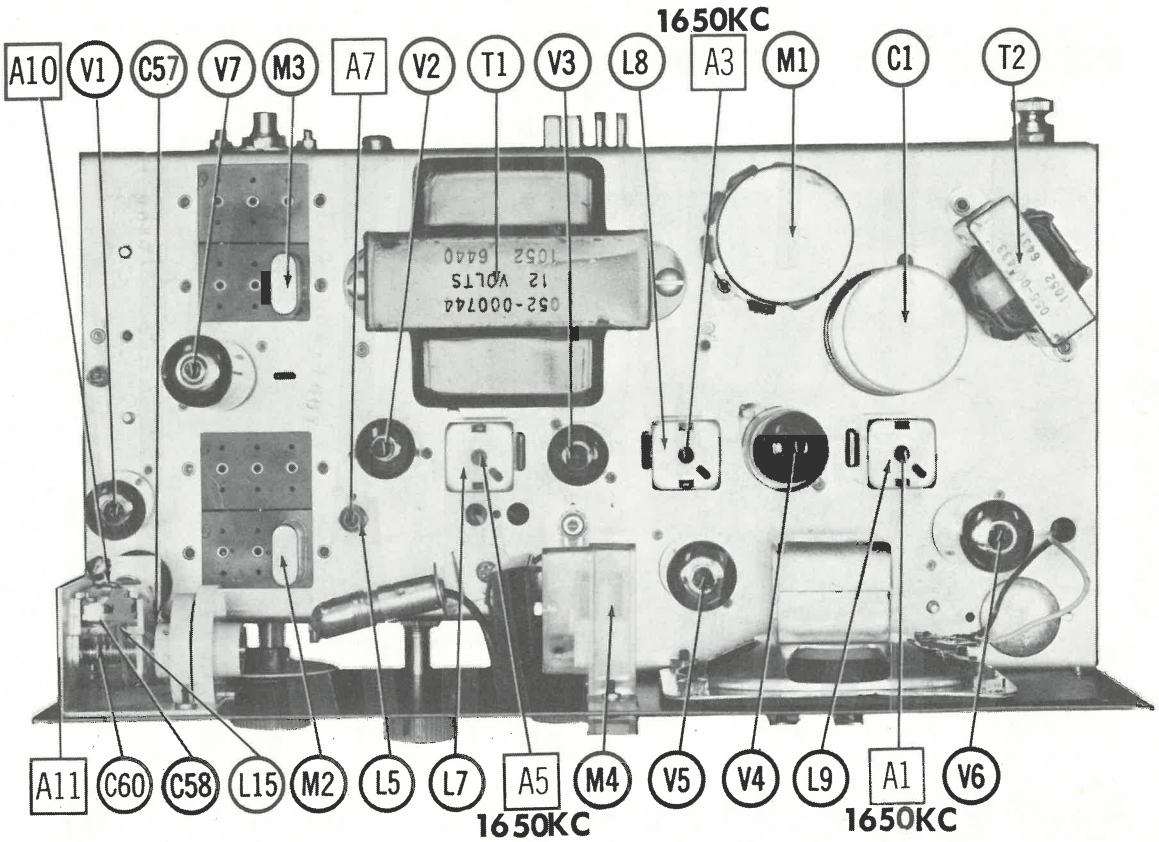
1650KC
A10
V1
C57
V7
M3
A7
V2
T1
V3
L8
A3
M1
C1
T2
A11
C60
C58
L15
M2
L5
L7
A5
1650KC
M4
V5
V4
L9
A1
1650KC
V6

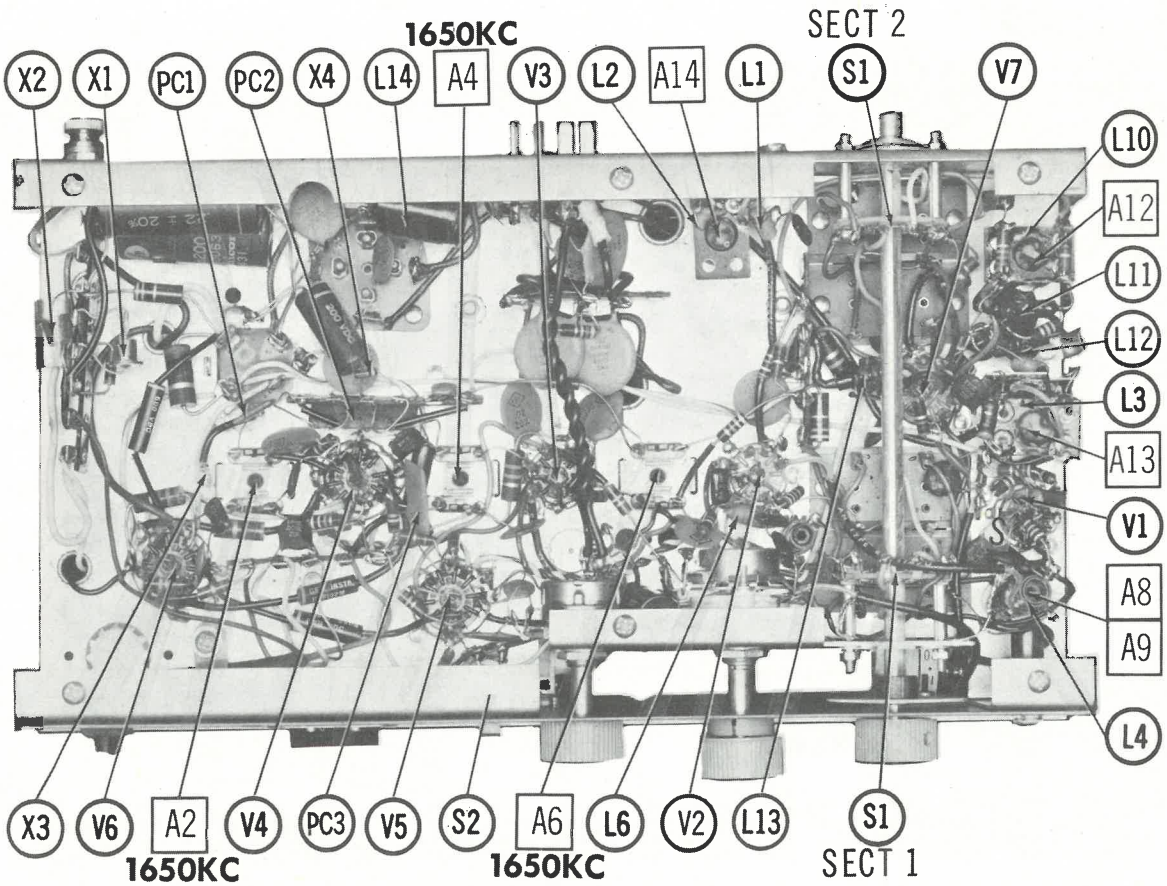
1650KC
SECT 2
X2
X1
PC1
PC2
X4
L14
A4
V3
L2
A14
L1
S1
V7
L10
A12
L11
L12
L3
A13
V1
A8
A9
L4
X3
V6
A2
1650KC
V4
PC3
V5
S2
A6
1650KC
L6
V2
L13
S1
SECT 1

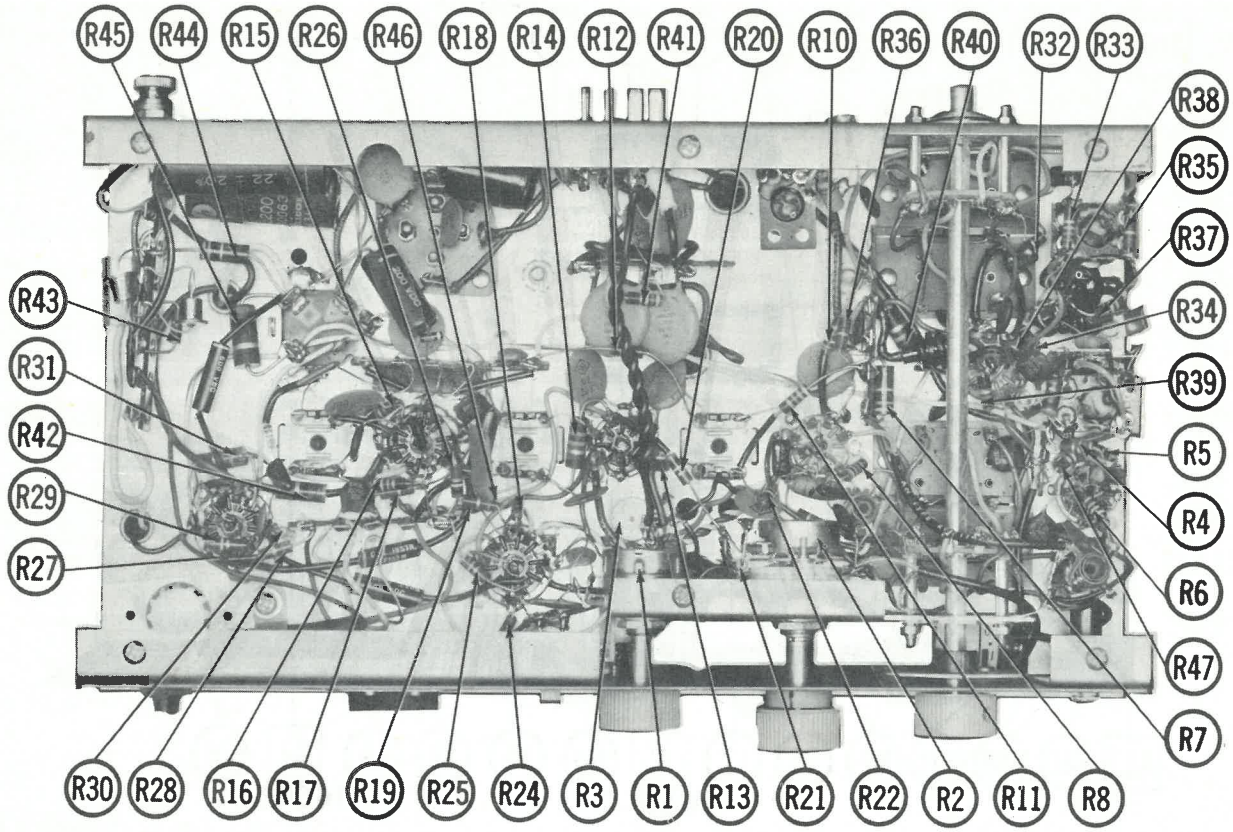
R45
R44
R15
R26
R46
R18
R14
R12
R41
R20
R10
R36
R40
R32
R33
R38
R35
R37
R34
R39
R5
R4
R6
R47
R7
R43
R31
R42
R29
R27
R30
R28
R16
R17
R19
R25
R24
R3
R1
R13
R21
R22
R2
R11
R8

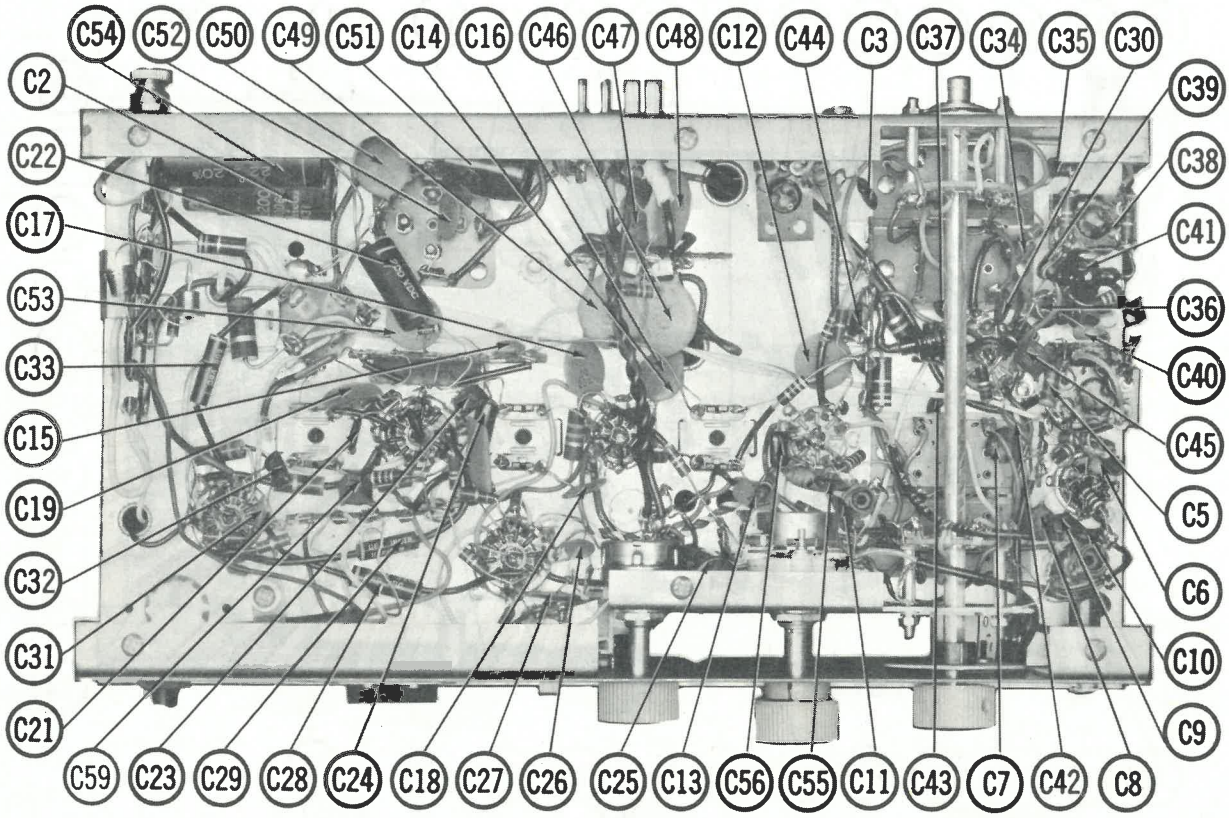
C54
C52
C50
C49
C51
C14
C16
C46
C47
C48
C12
C44
C3
C37
C34
C35
C30
C39
C38
C41
C36
C40
C45
C5
C6
C10
C9
C2
C22
C17
C53
C33
C15
C19
C32
C31
C21
C59
C23
C29
C28
C24
C18
C27
C26
C25
C13
C56
C55
C11
C43
C7
C42
C8

PARTS LIST AND DESCRIPTION

WIRING DATA

General-use Hook-up Wire	Use BELDEN No.	8530 (Solid) Available in 12 Colors 8524 (Stranded) Available in 12 Colors)
Shielded Antenna Lead	Use BELDEN No.	8214 Lowest Loss (RG-8/U Type) 8237 Low Loss (RG-8/U) 8240 (Solid) Miniature (RG-58/U) 8259 (Stranded) Miniature (RG-58A/U)
Coiled Microphone Cable	Use BELDEN No.	8499 Single Conductor Shielded (Neoprene) 8498 Single Conductor Shielded (Vinyl)
Ignition Noise Suppression	Use BELDEN No.	7300-Series Spark-Plug Sets
Bonding Strap	Use BELDEN No.	8661 (3/8 in.)

TUBES

◆ AMPEREX ◆ GENERAL ELECTRIC ◆ RCA ◆ SYLVANIA ◆

ITEM No.	USE	TYPE
V1	RF Amp.	12AU6
V2	Conv.	12BE6
V3	1st IF Amp.	12BA6
V4	2nd IF Amp. - 1st Speech Amp.	6BL8/ECF80
V5	Squelch Gate-Rec. Muting-AF Amp.	6BN8
V6	Output-Modulator 2nd Speech Amp.	6GW8/ECL86
V7	Trans. Osc.-Final Amp.	6CX8

POWER RECTIFIERS & SIGNAL DIODES

ITEM No.	MEASURED CURRENT	ORIGINAL Part or Type No.	RECTIFIERS: GENERAL ELECTRIC PART No.	RECTIFIERS: MALLORY PART No.	RECTIFIERS: RCA PART No.	RECTIFIERS: SARKES TARZIAN PART No.	DIODES: GENERAL ELECTRIC PART No.
X1		027-000296	1N1697	1N1492*	1N2864 or 1N3195	60H †or F6 †	
X2		027-000296	1N1697	1N1492*	1N2864 or 1N3195	60H † or F6 †	
X3		1N34A (019-101918)					1N34AS
X4		1N456 (019-002964)					

* Part #VB600 mya be used to replace X1 and X2.
† Part #STFD 60 may be used to replace X1 and X2.

ELECTROLYTIC CAPACITORS

ITEM No.	RATING CAP.	RATING VOLT.	Hallicrafters PART No.	AEROVOX PART No.	CORNELL-DUBILIER PART No.	GENERAL ELECTRIC PART No.	MALLORY PART No.	SPRAGUE PART No.
C1A	▲40	200						
B	■40	350	045-000632				FP420.36A	TVLS-4624.5*
C	▲40	350						
D	10	50						
C2	40	200	045-000633	PRS1580	BR40-250	QT1-14	TC58	TVA-1511

* Not normally in distributor's stock. Available thru distributor on order to manufacturer.

FIXED CAPACITORS

ITEM No.	RATING	REMARKS	AEROVOX PART No.	CENTRALAB PART No.	CORNELL-DUBILIER PART No.	ELMENCO PART No.	MALLORY PART No.	SPRAGUE PART No.
C3	75 2%	#493-110750-333			CD15F750G	DM-10-750G		
C4	24 2%	#493-110240-331						
C5	5 N750 ±.5pf			TCN-5	C10V5U	CCTN-050	CN7550	10TCU-V50
C6	10 N750 ±.5pf			TCN-10	C10Q1U	CCTN-100	CN7410	10TCU-Q10
C7	.001		BPD-001	DD-102	BYA10D1	CCD-102	B210	5HK-D10
C8	.001		BPD-001	DD-102	BYA10D1	CCD-102	B210	5HK-D10
C9	.001		BPD-001	DD-102	BYA10D1	CCD-102	B210	5HK-D10
C10	10 N750 ±.5pf			TCN-10	C10Q1U	CCTN-100	CN7410	10TCU-Q10
C11	22 ±.5pf	#493-110220-321						
C12	.02		BPD-02	DD-203	BYA6S2	CCD-203	B120	5HK-S20
C13	.01		BPD-01	DD-103	BYA10S1	CCD-103	B110	5HK-S10
C14	.01		BPD-01	DD-103	BYA10S1	CCD-103	B110	5HK-S10
C15	.002		BPD-002	DD-202	BYA10D2	CCD-202	B220	5HK-D20
C16	.02		BPD-02	DD-203	BYA6S2	CCD-203	B120	5HK-S20
C17	.02		BPD-02	DD-203	BYA6S2	CCD-203	B120	5HK-S20
C18	.01		BPD-01	DD-103	BYA10S1	CCD-103	B110	5HK-S10
C19	.02		BPD-02	DD-203	BYA6S2	CCD-203	B120	5HK-S20
C20	.001		BPD-001	DD-102	BYA10D1	CCD-102	B210	5HK-D10
C21	.001		BPD-001	DD-102	BYA10D1	CCD-102	B210	5HK-D10
C22	.1 200V		P288N-1	DF-104	PKM2P1	2DP-3-104	GEM201	2TM-P10
C23	.001		BPD-001	DD-102	BYA10D1	CCD-102	B210	5HK-D10
C24	.0047 600V		P688N-0047	DD-472	PKM6D47	6DP-1-472	GEM6247	6TM-D47
C25	.1 400V		P488N-1	DF-104	PM4P1	4DP-3-104	GEM401	4TM-P10
C26	.002		BPD-002	DD-202	BYA10D2	CCD-202	B220	5HK-D20
C27	.02		BPD-02	DD-203	BYA6S2	CCD-203	B120	5HK-S20
C28	.0047 600V		P688N-0047	DD-472	PKM6D47	6DP-1-472	GEM6247	6TM-D47
C29	.001 600V		P688N-001	DD-102	PKM6D1	6DP-1-102	GEM621	6TM-D10
C30	.001		BPD-001	DD-102	BYA10D1	CCD-102	B-210	5HK-D10
C31	.002		BPD-002	DD-202	BYA10D2	CCD-202	B-220	5HK-D20
C32	12 5%		ADM-15-120	TCZ-12	CD10C120J	DM-10-120J	CNO412	MS-412
C33	.0033 600V		P688N-0033	DD-332	PKM6D33	6DP-1-332	GEM6233	6TM-D33
C34	17 5%	#493-110170-221						
C35	47 2%	#493-110470-323			CD15E470G	DM-10-470G		
C36	12 5%		ADM-15-120	TCZ-12	CD10C120J	DM-10-120J	CNO412	MS-412
C37	.001		BPD-001	DD-102	BYA10D1	CCD-102	B210	5HK-D10
C38	.001		BPD-001	DD-102	BYA10D1	CCD-102	B210	5HK-D10
C39	40 2%	#493-110400-323						
C40	5 N750 ±.5pf			TCN-5	C10V5U	CCTN-050	CN7550	10TCU-V50
C41	.001		BPD-001	DD-102	BYA10D1	CCD-102	B210	5HK-D10
C42	.01		BPD-01	DD-103	BYA10S1	CCD-103	B110	5HK-S10
C43	.001		BPD-001	DD-102	BYA10D1	CCD-102	B210	5HK-D10
C44	.001 1KV		BPD-001	DD-102	BYA10D1	CCD-102	B210	5HK-D10
C45	.001 1KV		BPD-001	DD-102	BYA10D1	CCD-102	B210	5HK-D10
C46	.0033 1.4KV		HVD-15-3300	DD30-332	HVC16D33	3CCD-302	UAC233	30GA-D33
C47	.01		BPD-01	DD-103	BYA10S1	CCD-103	B110	5HK-S10
C48	.01 1.4KV		DAC-27	DD16-103	HVE16S1	16DP-3-103	UAC110	BL-S10
C49	.0033 1.4KV		HVD-15-3300	DD30-332	HVC16D33	3CCD-302	UAC233	30GA-D33
C50	.1 100V		TTD-1	DF-104	WMF1P1	1DP-2-104	TA010	TH-P10
C51	.02		BPD-02	DD-203	BYA6S2	CCD-203	B120	5HK-S20
C52	.01		BPD-01	DD-103	BYA10S1	CCD-103	B110	5HK-S10
C53	.02		BPD-02	DD-203	BYA6S2	CCD-203	B120	5HK-S20
C54	.22 600V		P688N-22		PKM6P22	6DP-5-224	GEM6022	6TM-P22
C55	8pf ±.5pf	#493-110080-521						
C56	8pf ±.5pf	#493-110080-521						
C57	27 2%	#493-110270-323			CD15E270G			
C58	45 2%	#493-110450-323						
C59	.001		BPD-001	DD-102	BYA10D1	CCD-103	B110	5HK-S10
C60	VFO Tuning	#048-000545						

\# Hallicrafters Part Number.

(CONTINUED ON PAGE 36)

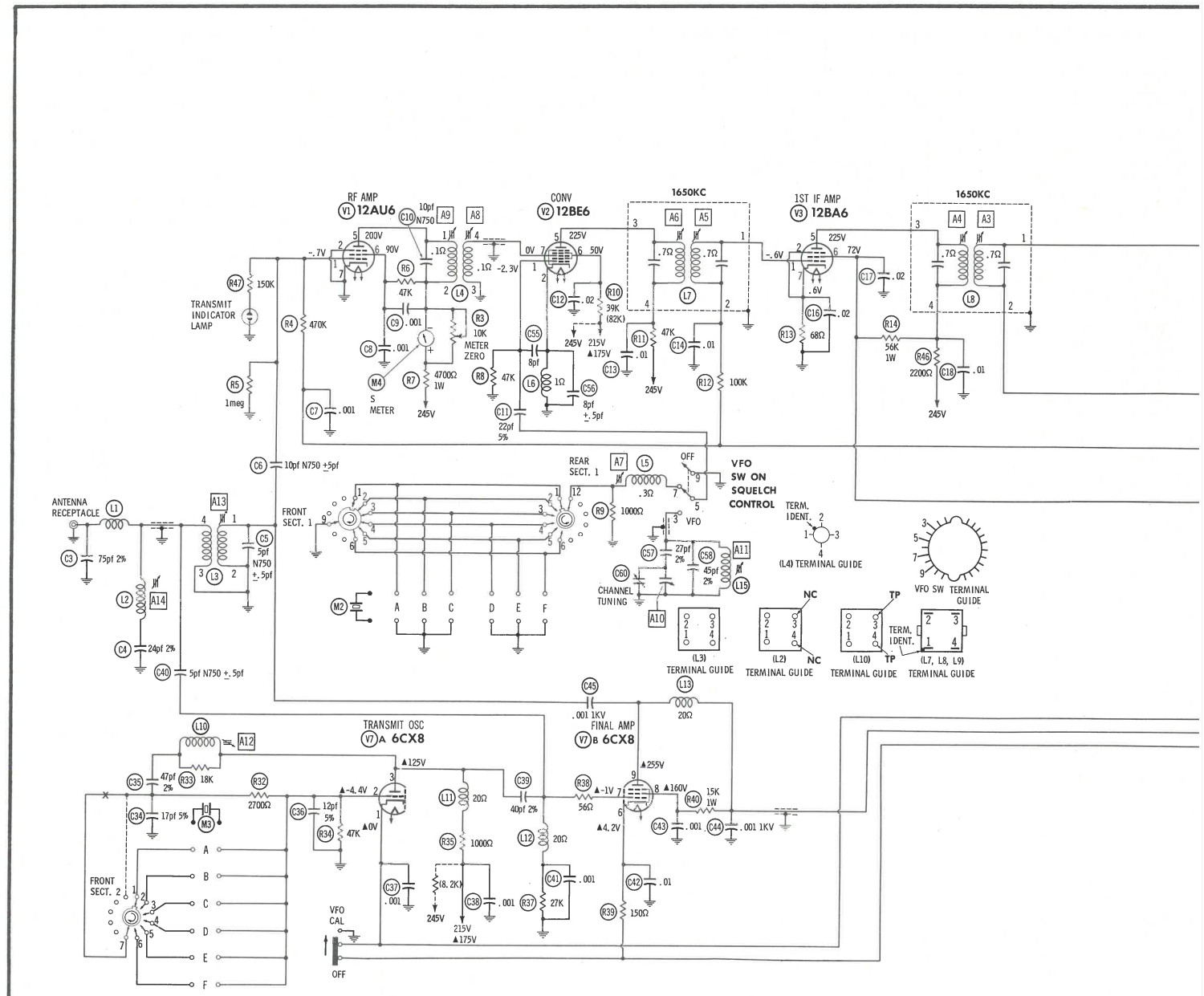

RESISTANCE MEASUREMENTS

ITEM	TUBE	Pin 1	Pin 2	Pin 3	Pin 4	Pin 5	Pin 6	Pin 7	Pin 8	Pin 9
V1	12AU6	700K	0Ω	FIL	FIL	†6500Ω	†53K	0Ω		
V2	12BE6	47K	1Ω	FIL	FIL	†48K	†48K	.1Ω		
V3	12BA6	1.3meg	68Ω	FIL	FIL	†3200Ω	†60K	68Ω		
V4	6BL8	†100K	400K	†50K	FIL	FIL	†3200Ω	150Ω	0Ω	2.4meg
V5	6BN8	†50K	▲0Ω	1meg	FIL	FIL	*1.1meg	†470K	8.2meg	0Ω
V6	6GW8	10meg	▲1800Ω	†1000Ω	FIL	FIL	†320Ω	180Ω	700K	†220K
V7	6CX8	▲0Ω	47K	†10K	FIL	FIL	▲150Ω	27K	†15K	†350Ω
ITEM	TUBE	Pin 1	Pin 2	Pin 3	Pin 4	Pin 5	Pin 6	Pin 7	Pin 8	Pin 9

ALL MEASUREMENTS MADE IN RECEIVE POSITION UNLESS NOTED.
▲ MEASURED IN TRANSMIT POSITION
† MEASURED FROM CATHODE OF X2
* SQUELCH CONTROL MAXIMUM COUNTERCLOCKWISE.
Resistors are 1/2 watt or less and rated 10% or 20% unless otherwise indicated.

NC NO CONNECTION
TP TIE POINT

⊖ See parts list for alternate value or application.
1. Voltage measurements taken with vacuum tube voltmeter.
2. All controls set for normal operation, no signal applied.
3. Measured values are from socket pin or terminal to common ground.
4. All terminals viewed from bottom unless otherwise designated.
5. Numbers assigned to terminals may not be found on the unit.
6. Supply voltage maintained at rated value for voltage readings.

A PHOTOFACT STANDARD NOTATION SCHEMATIC

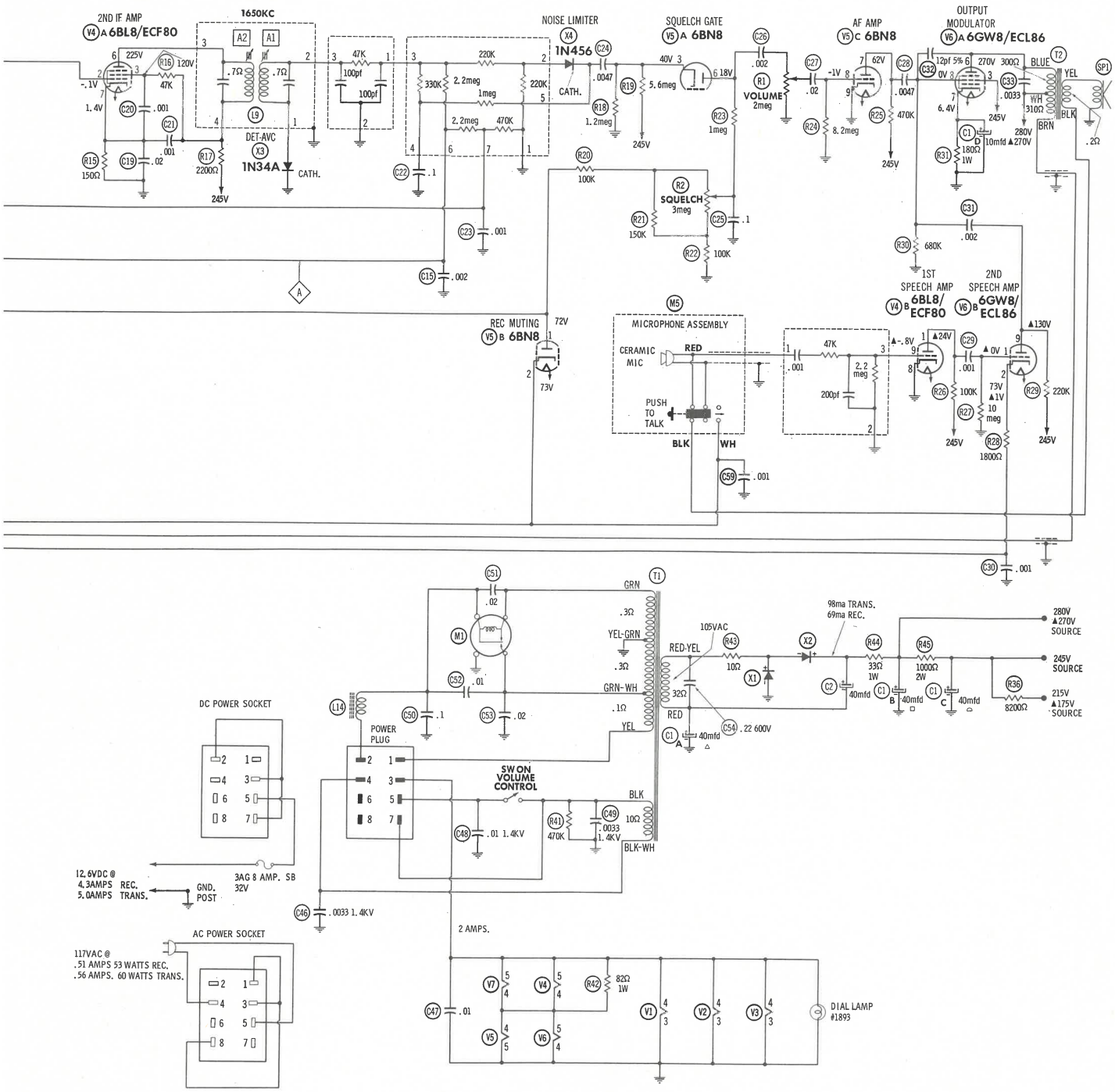

HALLICRAFTERS MODEL CB-9

PARTS LIST AND DESCRIPTION (CONTINUED)

CONTROLS

All wattages 1/2 watt, or less, unless otherwise listed.

ITEM No.	USE	RESIST-ANCE	REPLACEMENT DATA				
			Hallicrafters PART No.	CENTRALAB PART No.	CLAROSTAT PART No.	CTS-IRC PART No.	MALLORY PART No.
R1	Volume & Power Switch	2meg	025-002048	F2-2meg, SF102, KR-1 or (B-76, KR-1)	A47-2meg-Z, FS-3, SWE-12	Q13-139, 76-1, or (BU1, CF27, SS1, GC)*	UA26A, SL3500, US41 or (RU26A, SL38, SL3500, US41) or (U55, US26)
R2	Squelch & VFO Switch	3meg	025-002422				
R3	Meter Zero	10K	025-002104			MC103D	MLCN14N

* "SNAPTROL"

COILS (RF-IF)

ITEM No.	USE	REPLACEMENT DATA					
		Hallicrafters PART No.	MEISSNER PART No.	MERIT PART No.	MILLER PART No.	STANCOR PART No.	WORKMAN PART No.
L1	RF Choke (.22uh)	053-000661	19-2003		4584	RTC-8512	T957
L2	54MC Trap	053-000564					
L3	Ant. Matching Pri.	050-001066					
	Ant. Matching Sec.	050-001065					
L4	RF Trans.	051-002791					
L5	Crystal Osc.	050-000968			4202		
L6	Cath. Choke (27uh)	053-000647			74F275A1		T360
L7	1st IF (1650KC)	050-300722			1732		
L8	2nd IF (1650KC)	050-300722			1732		
L9	3rd IF (1650KC)	050-300722			1732		
L10	Trans. Osc.	051-003312					
L11	RF Choke (500uh)	053-000537	19-1061		6174	RTC-8592	T834
L12	RF Choke (500uh)	053-000537	19-1061		6174	RTC-8534	T834
L13	RF Choke (500uh)	053-000537	19-1061		6174	RTC-8592	T834
L14	Hash Filter (40uh)	051-002740					
L15	VFO Osc.	050-000951					

TRANSFORMER (POWER)

ITEM No.	RATING			REPLACEMENT DATA					NOTES
	PRI. 1	PRI. 2	SEC. 1	Hallicrafters PART No.	MERIT PART No.	STANCOR PART No.	THORDARSON PART No.	TRIAD PART No.	
T1	12.6V DC @ 5.0A	117VAC @ .56A	105VAC @ 98ma	052-000744					
	SEC. 2								
	12VAC @ 2A								

TRANSFORMER (AUDIO OUTPUT)

ITEM No.	IMPEDANCE		REPLACEMENT DATA					NOTES
	PRI.	SEC.	Hallicrafters PART No.	MERIT PART No.	STANCOR PART No.	THORDARSON PART No.	TRIAD PART No.	
T2	20K Tap @ 7500Ω	3-4Ω	055-000433					

SPEAKER

ITEM No.	TYPE	REPLACEMENT DATA		NOTES
		Hallicrafters PART No.	QUAM PART No.	
SP1	3" x 4" PM 3-4Ω	085-000233		

COMPONENT COMBINATIONS

ITEM No.	USE	DESCRIPTION	Hallicrafters PART NO.	REPLACEMENT DATA
PC1	Detector RF Filter	47K, 100pf, 100pf	049-000244	Aerovox PA-97 Centralab PC-50 Sprague D-1
PC2	ANL-AVC Filter	220K, 220K, 330K, 470K, 1meg, 2.2meg, 2.2meg	049-000281	
PC3	Mic. Input Filter	47K, 2.2meg, .001mfd, 200pf	049-000282	

FUSES

ITEM No.	TYPE	RATING	REPLACEMENT DATA					
			Hallicrafters PART No.		LITTELFUSE PART No.		BUSS PART No.	
			FUSE	HOLDER	FUSE	HOLDER	FUSE	HOLDER
F1	3AG	8A 32V S/B	039-000699	006-000883	313008	155020	MDL 8	HHJ-B

VIBRATOR

ITEM No.	TYPE	INPUT VOLTS	FRE-QUENCY	REPLACEMENT DATA			NOTES
				Hallicrafters PART No.	CORNELL-DUBILIER PART No.	MALLORY PART No.	
M1	Interrupter	12.6	115~	027-000282	6371	G1601	

MISCELLANEOUS

ITEM No.	PART NAME	Hallicrafters PART No.	NOTES
M2	Receive Crystal	019-002819-*	* When ordering, replace with channel number.
M3	Transmit Crystal	019-002820-*	
M4	S Meter	082-000592	
M5	Microphone Assembly	085-000234	Ceramic Mic
S1	Receiver, Sec. 1	062-000215	Channel Selector (Rotary Wafer)
	Transmitter, Sec. 2	062-000216	
S2	VFO Cal. Switch	060-002428	SPDT Slide

CABINETS & CABINET PARTS

(When Ordering Specify Model, Chassis & Color)

ITEM	PART No.
Knob, Channel Selector	015-001860
Knob, Volume	015-001861
Knob, Squelch	015-001859
Knob, VFO, Off (Bar Type)	015-001740-003
Knob, VFO Tuning	015-001801
Knob, VFO Tuning (Calibrated)	015-001802

ITEM	PART No.
Cabinet Top Rivet Assembly	150-006989
Cabinet Bottom Rivet Assembly	150-006988
Front Panel	068-001567
Front Panel Overlay	007-000881
Dial Assembly	150-006986

PHOTOFACT®

TRADE NAME: Poly-Comm Model PRO

SUPPLIER: For Current Address, see Master Index

TYPE SET: 13-Tube Transceiver

POWER SUPPLY: 110 - 120 Volts AC, 60 Cycles (or)
12 Volt Storage Battery

RATING: 76 Watts, .71 Amp. @ 117VAC (Trans.)
70 Watts, .66 Amp. @ 117VAC (Rec.)
6.0 Amp. @ 12.6VDC (Trans.)
5.6 Amp. @ 12.6VDC (Rec.)

TUNING RANGE: Transmitter: All 23 CB Channels plus a spare.
Receiver: Any one crystal controlled channel or continuously variable.

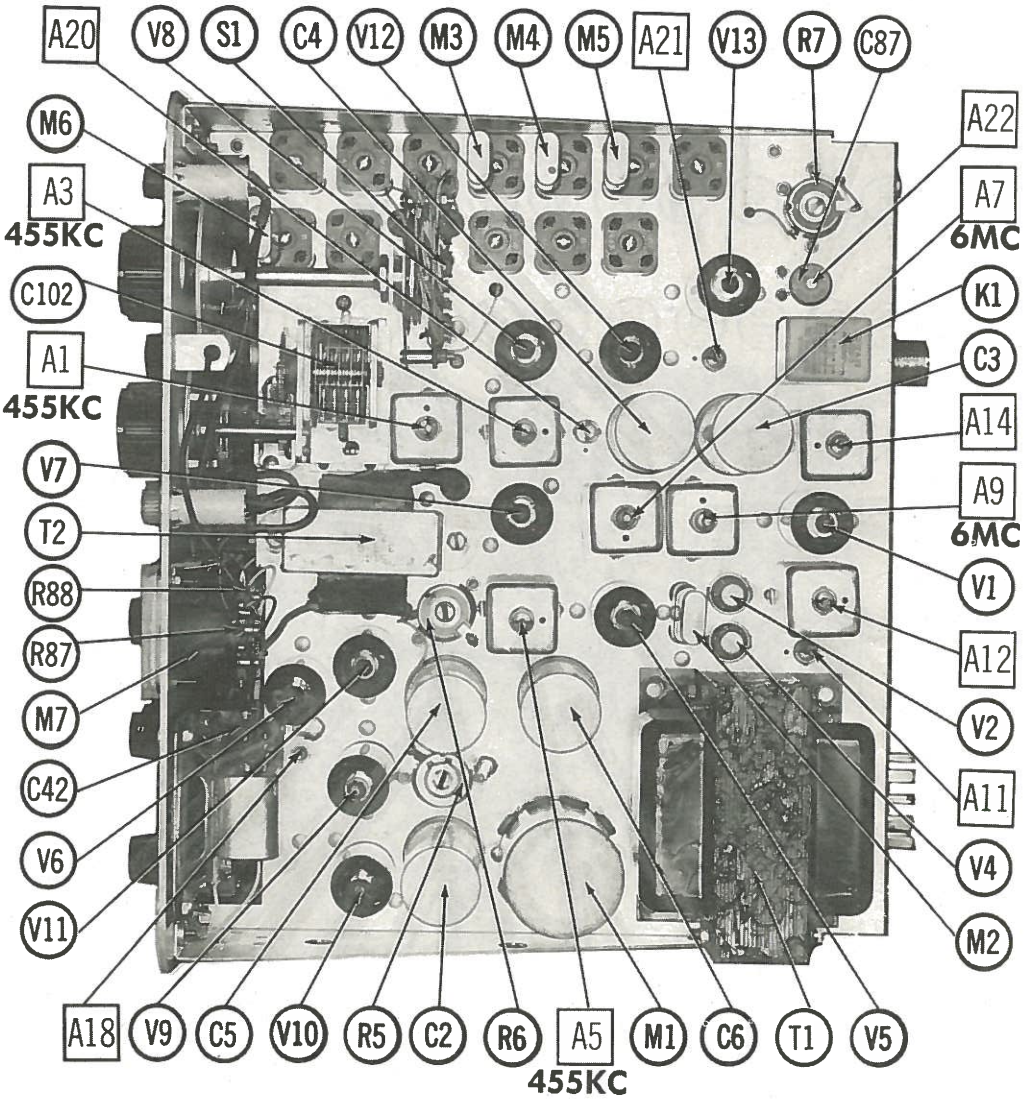

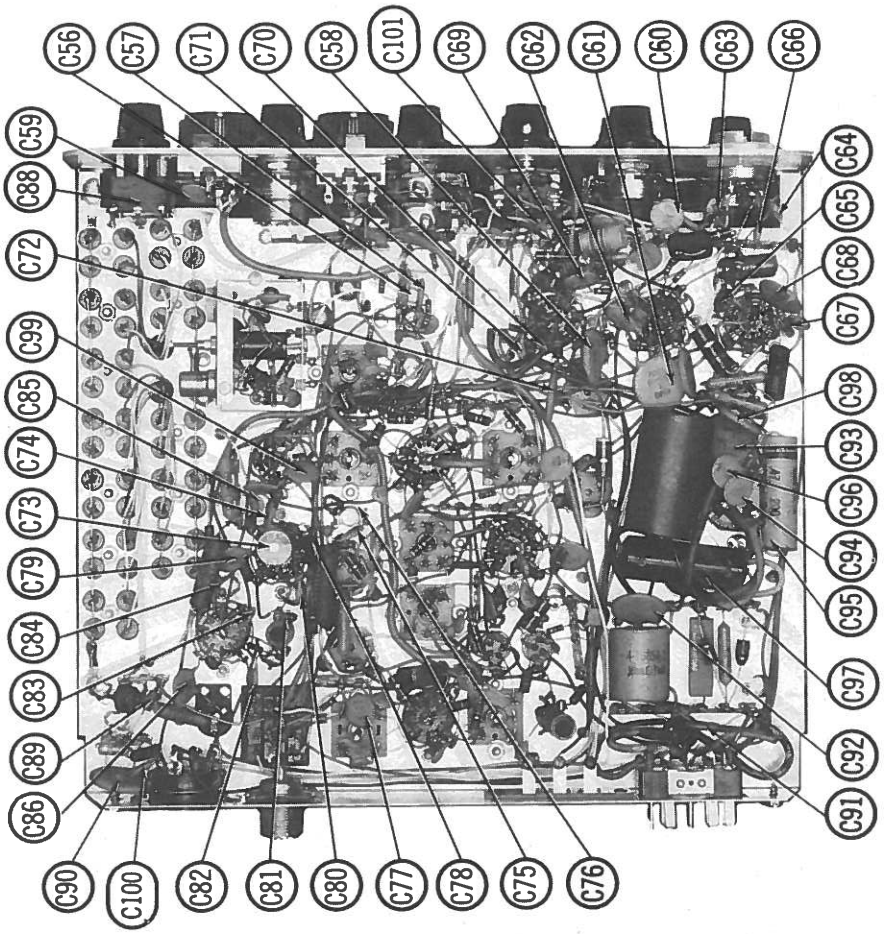
C56
C57
C71
C70
C58
C101
C69
C62
C61
C60
C63
C66
C59
C38
C72
C99
C85
C74
C73
C79
C84
C83
C89
C86
C90
C100
C82
C81
C80
C77
C78
C75
C76
C64
C65
C68
C67
C98
C93
C96
C94
C95
C97
C92
C91

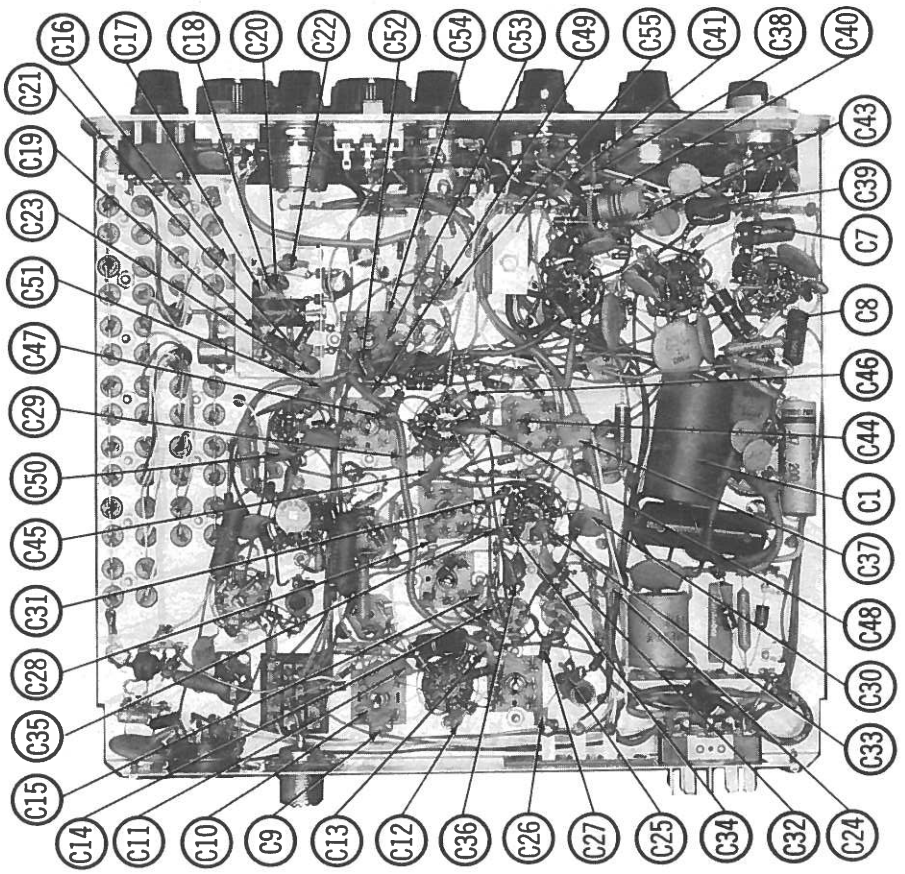
C16
C17
C18
C20
C22
C52
C54
C53
C49
C55
C41
C38
C40
C21
C19
C23
C51
C47
C29
C50
C45
C31
C28
C35
C15
C14
C11
C10
C9
C13
C12
C36
C26
C27
C25
C34
C32
C24
C43
C39
C7
C8
C46
C44
C1
C37
C48
C30
C33

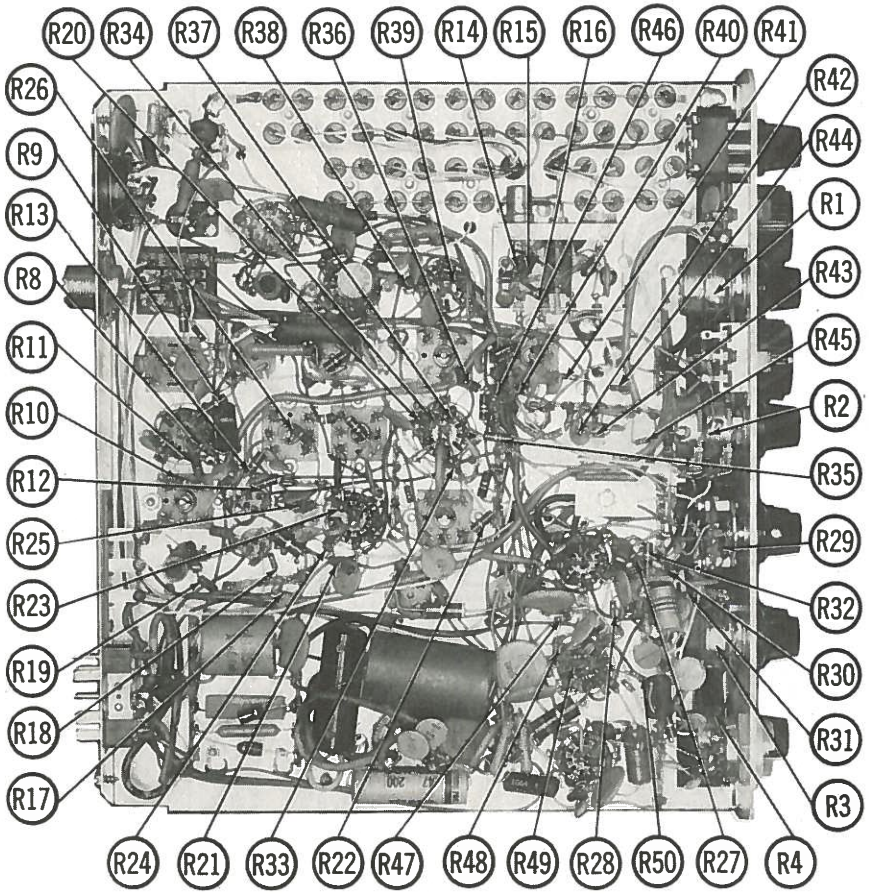
R20
R34
R37
R38
R36
R39
R14
R15
R16
R46
R40
R41
R42
R44
R1
R43
R45
R2
R35
R29
R32
R30
R31
R3
R4
R50
R27
R28
R49
R48
R47
R22
R33
R21
R24
R17
R18
R19
R23
R25
R12
R10
R11
R8
R13
R9
R26

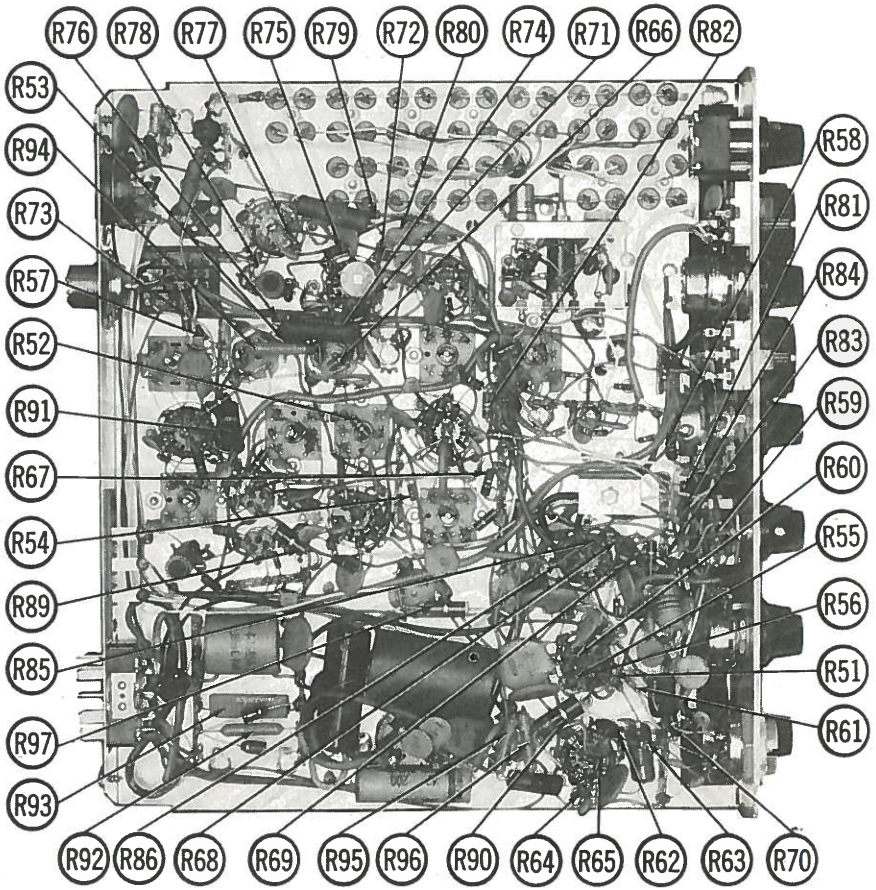
R76
R78
R77
R75
R79
R72
R80
R74
R71
R66
R82
R58
R81
R84
R83
R59
R60
R55
R56
R51
R61
R70
R63
R62
R65
R64
R90
R96
R95
R69
R68
R86
R92
R93
R97
R85
R89
R54
R67
R91
R52
R57
R73
R94
R53

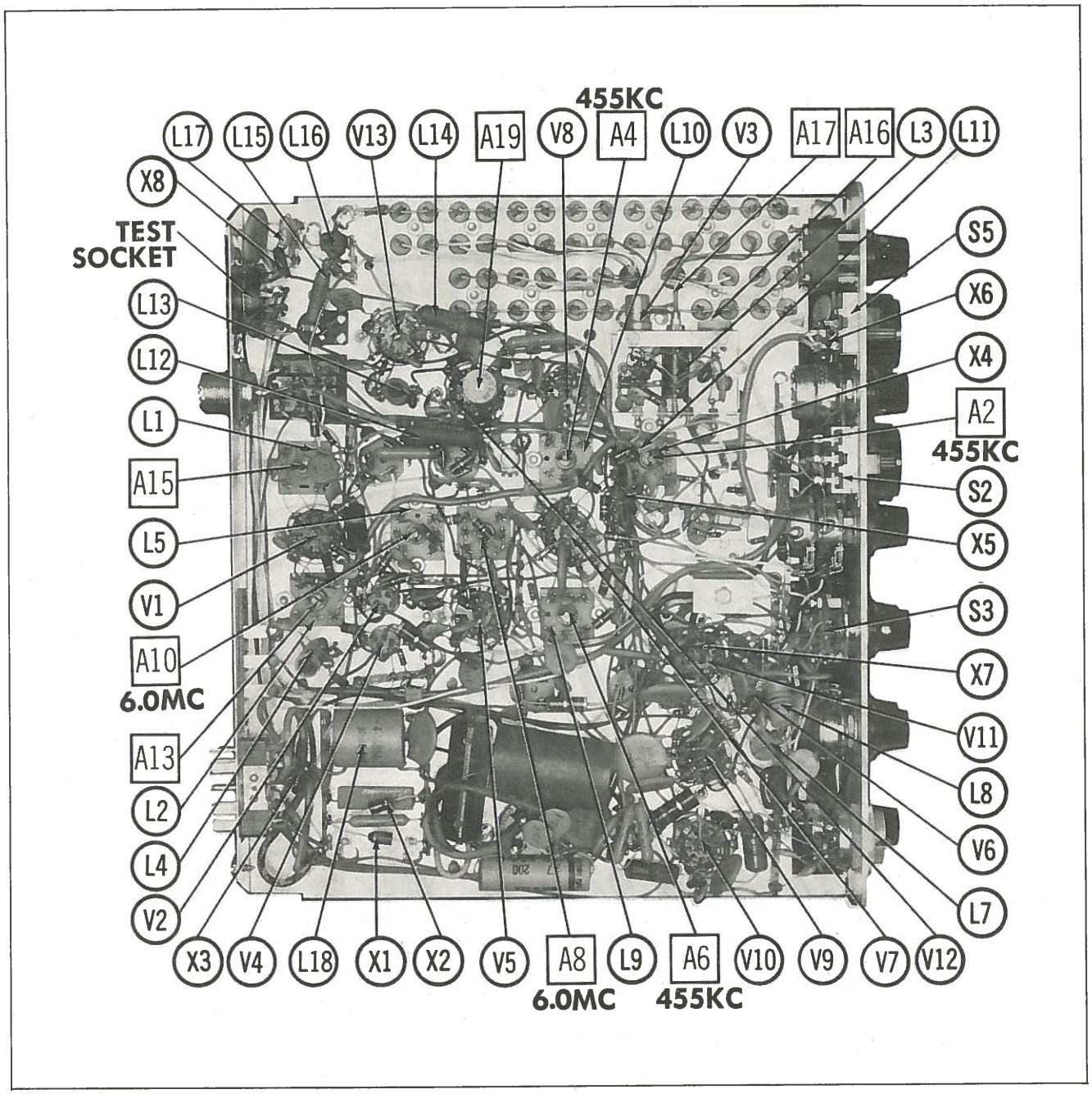

PARTS LIST AND DESCRIPTION

WIRING DATA

General-use Hook-up Wire	Use BELDEN No.	8530 (Solid) Available in 12 Colors
		8524 (Stranded) Available in 12 Colors)
Shielded Antenna Lead	Use BELDEN No.	8214 Lowest Loss (RG-8/U Type)
		8237 Low Loss (RG-8/U)
		8240 (Solid) Miniature (RG-58/U)
		8259 (Stranded) Miniature (RG-58A/U)
Coiled Microphone Cable	Use BELDEN No.	8499 Single Conductor Shielded (Neoprene)
		8498 Single Conductor Shielded (Vinyl)
Ignition Noise Suppression	Use BELDEN No.	7300-Series Spark-Plug Sets
Bonding Strap	Use BELDEN No.	8661 (3/8 In.)

TUBES

◆ AMPEREX ◆ GENERAL ELECTRIC ◆ RCA ◆ SYLVANIA ◆

ITEM No.	USE	TYPE
V1	RF Amp.	6EH7/EF183
V2	1st Mixer	6DS4
V3	Tunable Osc.	6DS4
V4	Crystal Osc.	6DS4
V5	2nd Mixer-2nd Rec. Osc .	6BL8
V6	"Q" Multiplier	12AX7/ECC83
V7	1st IF Amp.	6EH7/EF183

ITEM No.	USE	TYPE
V8	2nd IF Amp.	6EH7/EF183
V9	AF Amp. -2nd Speech Amp- Squelch	12AX7/ECC83
V10	1st Speech Amp.	6267
V11	Output - Modulator	6BQ5
V12	Transmit Osc. - Tripler/Driver	6BL8
V13	Final Amp.	6CW5 (8327)*

* Alternate

(CONTINUED ON PAGE 108)

ALIGNMENT INSTRUCTIONS

Suggested Alignment Tools:
A1 thru A15, A21..... GENERAL CEMENT #8271, 8275..... WALSCO #2519
A16, A19, A20, A22..... GENERAL CEMENT #5009..... WALSCO #2520
A17, A18..... GENERAL CEMENT #8271..... WALSCO #2519

RECEIVER ALIGNMENT

Connect a DC VTVM from point (A) to chassis. Set to indicate negative voltage.

SIGNAL GENERATOR	CHANNEL	ADJUST	REMARKS
High side thru .01mfd to pin 2 (grid) of V5 (2nd Mixer), low side to chassis. Tune to 455KC (unmod.)	Any	A1 thru A6	Adjust for maximum negative voltage at point A while maintaining approximately -1Volt at point (B) by reducing generator output.
High side thru .01mfd to pin 4 (grid) of V2 (1st Mixer), low side to chassis. Tune to 6.0MC (unmod.).	Any	A7 thru A10	"
High side to antenna receptacle, low side to chassis. Tune to highest channel frequency used. Set S2 to "X" position.	Highest Channel Used	A11 thru A15	"
High side to antenna receptacle, low side to chassis. Tune to 26.965MC (unmod.). Set S2 to "T" position.	1	A16, A17	Set A16 at mid-range and adjust A17 for maximum at point (A).
High side to antenna receptacle, low side to chassis. Tune to 27.255MC.	23	A16	Adjust for maximum.
High side to antenna receptacle, low side to chassis. Tune to 26.965MC.	1	A17	Adjust for maximum. Repeat last two steps until dial is calibrated on channels 1 and 23.
High side to antenna receptacle, low side to chassis. Tune to 27.085MC (unmod.) (100uV). Use either tunable or crystal osc.	11	A18, A19	Set S3 at Peak, C42(Frequency Control) on KSC and R3 (Selectivity) to approximately center position. Adjust A18 for maximum reading at point (A). Rotate Frequency Control to maximum CCW and CW. Meter reading should drop appreciably and equally on each extreme. Reset frequency control to KCS and set S3 to Null. Alternately adjust the frequency and selectivity for maximum null. This should occur approximately at the KCS position on the frequency control. About 5 "S" units of null should be noticed relative to an "S9" signal.

TRANSMITTER ALIGNMENT

ONLY THOSE PERSONS PROPERLY LICENSED ARE PERMITTED TO MAKE REPAIRS OR ADJUSTMENTS WHICH MAY RESULT IN ILLEGAL OPERATION. (REFER TO FCC RULES AND REGULATIONS PART 95, SUBPART D, SECTION 95.95).

The frequency of the transmitter should be checked periodically with a secondary frequency standard to insure proper and legal operation.

Best results will be obtained when adjusting the final RF output circuit if the antenna normally used is connected and the chassis is as nearly in the cabinet as possible.

Connect either 50Ω dummy load or the normally used antenna system.

INDICATOR	ADJUST	REMARKS
Accurate frequency meter.	A19	Adjust for correct frequency.
Field Strength Meter. Connect a DC VTVM from Pin 9 (grid) of V12A (Trans-Osc.) to chassis. Set to indicate negative voltage.	A20	Adjust for maximum. Key Transmitter several times on each channel used to insure oscillator starting.
Connect a DC VTVM from point (C) to chassis. Set to indicate negative voltage.	A21	Adjust for maximum.
Field Strength Meter.	A22	Set TX Load control on front panel to its center position. Adjust A22 for maximum. Repeat A21, A22 adjustment.
"	TX Load	Connect antenna normally used and adjust for maximum.

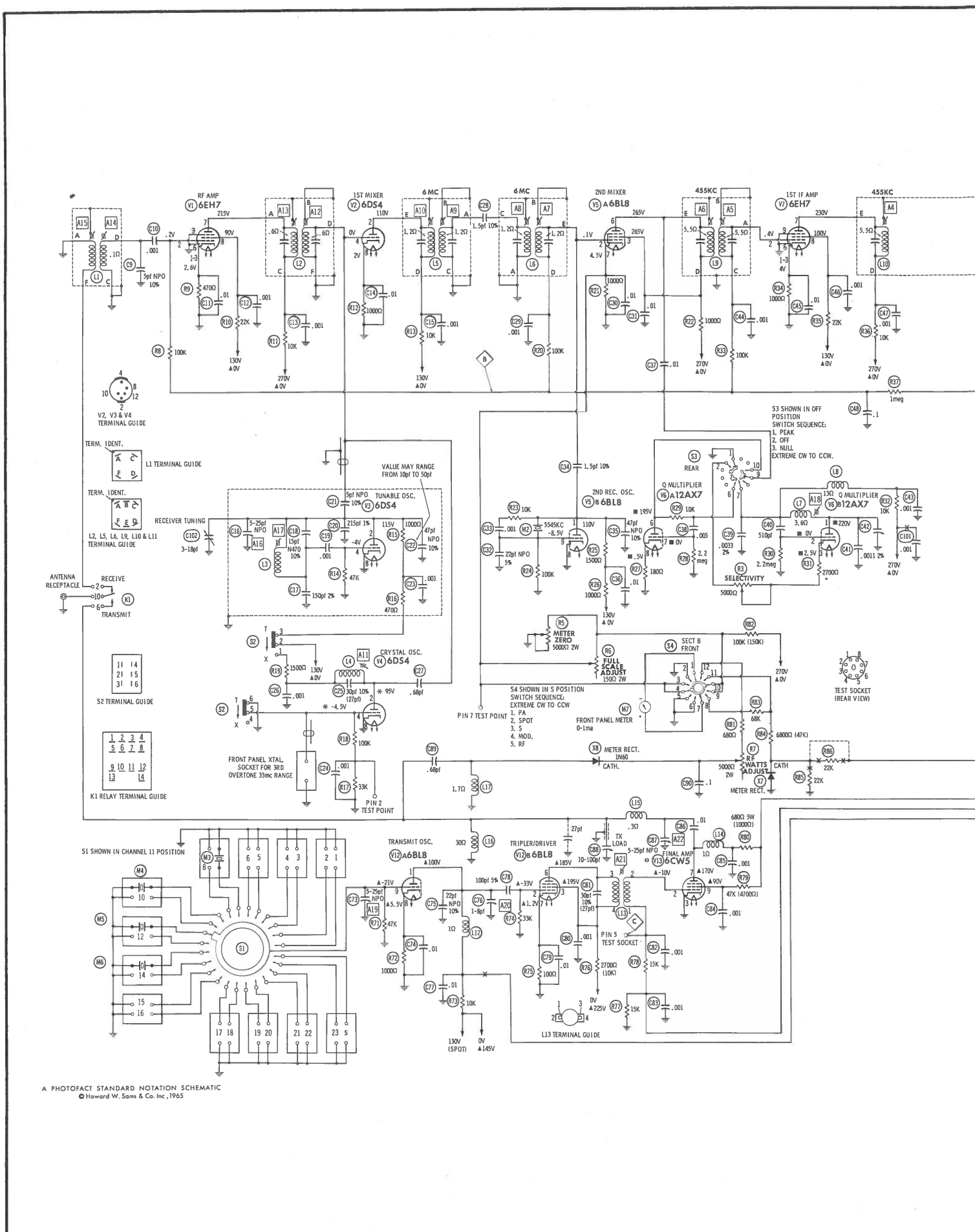

A PHOTOFACT STANDARD NOTATION SCHEMATIC

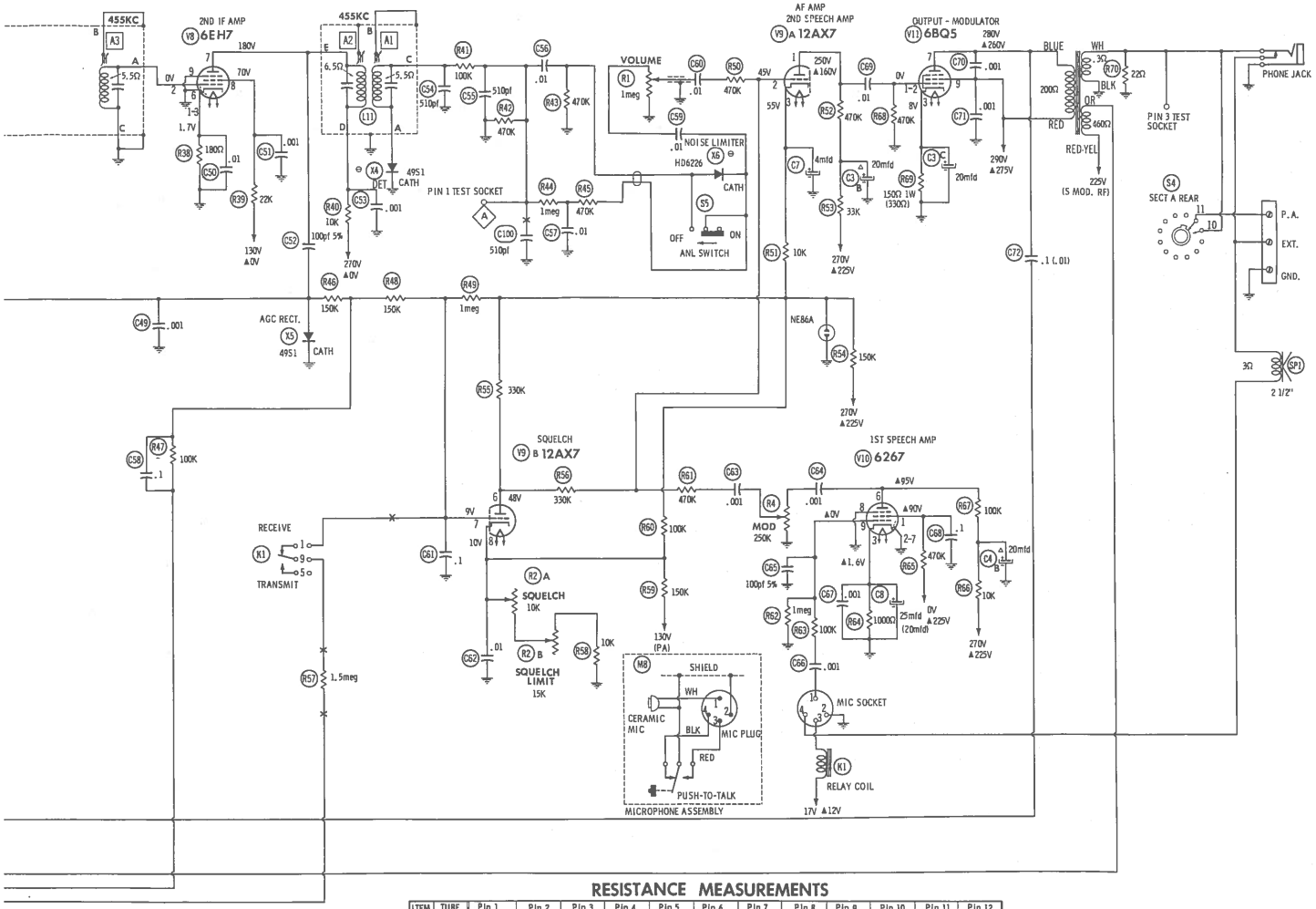

REFER TO PAGE 109 FOR POWER SCHEMATIC

RESISTANCE MEASUREMENTS

ITEM	TUBE	Pin 1	Pin 2	Pin 3	Pin 4	Pin 5	Pin 6	Pin 7	Pin 8	Pin 9	Pin 10	Pin 11	Pin 12
V1	6EH7	470Ω	1.4meg	470Ω	FIL	FIL	0Ω	11K †	23K	0Ω			
V2	6DS4	NC	11K ●	NC	.6Ω	NC	NC	NC	1000Ω	NC	FIL	NC	FIL
V3	6DS4	NC	2500Ω ●	NC	47K	NC	NC	NC	0Ω	NC	FIL	NC	FIL
V4	6DS4	NC	2500Ω ●✱	NC	130K ✱	NC	NC	NC	0Ω	NC	FIL	NC	FIL
V5	6BL8	3500Ω●	1.4meg	2300Ω †	FIL	FIL	2300Ω †	680Ω	0Ω	100K			
V6	12AX7	11K †	2.2meg	7700Ω ■	FIL	FIL	21K ■ †	2.2meg	180Ω	FIL			
V7	6EH7	1000Ω	1.4meg	1000Ω	FIL	FIL	0Ω	11K †	23K ●	0Ω			
V8	6EH7	180Ω	5.5Ω	180Ω	FIL	FIL	0Ω	11K †	23K ●	0Ω			
V9	12AX7	500K †	750K	90K	FIL	FIL	420K †	200K	20K	FIL			
V10	6267	470K †▲	0Ω	1000Ω	FIL	FIL	110K †	0Ω	0Ω	1meg			
V11	6BQ5	470K	470K	150Ω	FIL	FIL	NC	500Ω †	NC	300Ω †			
V12	6BL8	11K ●▲	33K	4000Ω †▲	FIL	FIL	4000Ω †▲	100Ω	1000Ω	47K			
V13	6CW5	NC	30K	0Ω	FIL	FIL	NC	2500Ω †▲	NC	48K †▲			
ITEM	TUBE	Pin 1	Pin 2	Pin 3	Pin 4	Pin 5	Pin 6	Pin 7	Pin 8	Pin 9	Pin 10	Pin 11	Pin 12

ALL MEASUREMENTS MADE IN RECEIVE POSITION UNLESS OTHERWISE INDICATED.
▲ MEASURED IN TRANSMIT POSITION
† MEASURED FROM CATHODE OF X2
✱ MEASURED WITH S2 IN "X" POSITION
■ MEASURED WITH S3 IN NULL POSITION AND SELECTIVITY CONTROL (R3) MAXIMUM CCW
● MEASURED FROM JUNCTION OF C1 & C2A
NC NO CONNECTION

Resistors are 1/2 watt or less and rated 10% or 20% unless otherwise indicated.

⊖ See parts list for alternate value or application.
1. Voltage measurements taken with vacuum tube voltmeter.
2. All controls set for normal operation, no signal applied.
3. Measured values are from socket pin or terminal to common ground.
4. All terminals viewed from bottom unless otherwise designated.
5. Numbers assigned to terminals may not be found on the unit.
6. Supply voltage maintained at rated value for voltage readings.

POLY-COMM MODEL PRO

REFER TO PAGE 109 FOR POWER SUPPLY SCHEMATIC

PARTS LIST AND DESCRIPTION (CONTINUED)

POWER RECTIFIERS & SIGNAL DIODES

ITEM No.	MEASURED CURRENT	ORIGINAL Part or Type No.	RECTIFIERS				DIODES
			GENERAL ELECTRIC PART No.	MALLORY PART No.	RCA PART No.	SARKES TARZIAN PART No.	GENERAL ELECTRIC PART No.
X1	100MA	CER71C	1N1697	1N3195 or 1N2071	SK-3016 or SK-3017	F4	
X2	100MA	CER71C	1N1697	1N3195 or 1N2071	SK-3016 or SK-3017	F4	
X3	100MA	CER71C	1N1697	1N3195 or 1N2071	SK-3016 or SK-3017	F1	
X4		49S1 (HD6226)					
X5		49S1 (HD6226)					
X6		49S1 (HD6226)					
X7		CER71C					
X8		1N60					1N60 or 1N34AS

ELECTROLYTIC CAPACITORS

ITEM No.	RATING		REPLACEMENT DATA					
	CAP.	VOLT.	POLY-COMM PART No.	AEROVOX PART No.	CORNELL-DUBILIER PART No.	GENERAL ELECTRIC PART No.	MALLORY PART No.	SPRAGUE PART No.
C1	40	250		PRS1560	BR40-250	QT1-14	TC58	TVA-1511
C2A	■30	350						
B	▲20	350		AFH3-28-30	CCO225	XC3-11	FP330.7A	TVL-3639.8
C	10	350						
C3A	■30	350						
B	▲20	350		AFH3-109	CCO830	XC3-25	FP330A	TVL-3636
C	20	25						
C4A	■30	350						
B	▲20	350		AFH3-109	CCO830	XC3-25	FP330A	TVL-3636
C	20	25	Not Used					
C5	500	25		AFH1-08	AAO120	XC1-24	WP057A	TVL-1220
C6	500	25		AFH1-08	AAO120	XC1-24	WP057A	TVL-1220
C7	4	150		CRE953A	NLW4-150	MT1-4	TT150X4	TE-1503
C8	25	25		CRE612A	NLW25-25	MT1-14	TT25X25	TL-1207

FIXED CAPACITORS

ITEM No.	RATING	REMARKS	REPLACEMENT DATA					
			AEROVOX PART No.	CENTRALAB PART No.	CORNELL-DUBILIER PART No.	ELMENCO PART No.	MALLORY PART No.	SPRAGUE PART No.
C9	5pf NPO 10%		NPO-DI 5.0	DTZ-4R7	C10V47C	CCTO-050	CNO547	10TCC-V50
C10	.001		BPD-001	DD-102	BYA10D1	CCD-102	B210	5HK-D10
C11	.01 100V		TTD-01	DM-103			TA110	TH-S10
C12	.001		BPD-001	DD-102	BYA10D1	CCD-102	B210	5HK-D10
C13	.001		BPD-001	DD-102	BYA10D1	CCD-102	B210	5HK-D10
C14	.01 100V		TTD-01	DM-103			TA110	TH-S10
C15	.001		BPD-001	DD-102	BYA10D1	CCD-102	B210	5HK-D10
C16	5-25 NPO				CD15F151G	DM-15-151G		
C17	150 2%					*	*	10TCT-Q15
C18	15 N470 10%							
C19	.001		BPD-001	DD-102	BYA10D1	CCD-102	B210	5HK-D10
C20	215 1%							
C21	5 NPO 10%		NPO-DI 5.0	DTZ-4R7	C10V47C	CCTO-050	CNO547	10TCC-V50
C22	47 NPO 10%		NPO-DI 47	DTZ-47	C10Q47C	CCTO-470	CNO447	10TCC-Q47
C23	.001		BPD-001	DD-102	BYA10D1	CCD-102	B210	5HK-D10
C24	.001		BPD-001	DD-102	BYA10D1	CCD-102	B210	5HK-D10
C25	30 10%	(27pf) †	ADM-15-300	CPR-40J	CD15E300J	DM-15-300K	CNO427	MS-43
C26	.001		BPD-001	DD-102	BYA10D1	CCD-102	B210	5HK-D10
C27	.68pf							
C28	1.5 10%							
C29	.001		BPD-001	DD-102	BYA10D1	CCD-102	B210	5HK-D10
C30	.01		BPD-01	DD-103	BYA10S1	CCD-103	B110	5HK-S10
C31	.01		BPD-01	DD-103	BYA10S1	CCD-103	B110	5HK-S10
C32	22 NPO 5%		NPO-DI 22	DTZ-22	C10Q22C		CNO422	10TCC-Q22
C33	.001		BPD-01	DD-103	BYA10S1	CCD-103	B110	5HK-S10

(CONTINUED ON PAGE 110)

FIXED CAPACITORS(cont)

ITEM No.	RATING	REMARKS	REPLACEMENT DATA					
			AEROVOX PART No.	CENTRALAB PART No.	CORNELL-DUBILIER PART No.	ELMENCO PART No.	MALLORY PART No.	SPRAGUE PART No.
C34	1.5pf 10%							
C35	47 NPO 10%		NPO-DI 47	DTZ-47	C10Q47C	CCTO-470	CNO447	10TCC-Q47
C36	.01		BPD-01	DD-103	BYA10S1	CCD-103	B110	5HK-S10
C37	.01		BPD-01	DD-103	BYA10S1	CCD-103	B110	5HK-S10
C38	.005		BPD-005	DD-502	BYA10D5	CCD-502	B250	5HK-D50
C39	.0033 2%				CD19F332G	DM-19-332G		
C40	510		DI-500	DD-511	LA10T5-C4	CCD-501	GP350	5GA-T50
C41	.0011 2%				CD19F112G	DM-19-112G		
C42								
C43	.001		BPD-001	DD-102	BYA10D1	CCD-102	B210	5HK-D10
C44	.001		BPD-001	DD-102	BYA10D1	CCD-102	B210	5HK-D10
C45	.01		BPD-01	DD-103	BYA10S1	CCD-103	B110	5HK-S10
C46	.001		BPD-001	DD-102	BYA10D1	CCD-102	B210	5HK-D10
C47	.001		BPD-001	DD-102	BYA10D1	CCD-102	B210	5HK-D10
C48	.1 150V			DF-104				TH-P10
C49	.001		BPD-001	DD-102	BYA10D1	CCD-102	B210	5HK-D10
C50	.01		BPD-01	DD-103	BYA10S1	CCD-103	B110	5HK-S10
C51	.001		BPD-001	DD-102	BYA10D1	CCD-102	B210	5HK-D10
C52	100 5%		ADM-15-101	CPR-100J	CD15F101K	DM-15-101J	CNO310	MS-31
C53	.001		BPD-001	DD-102	BYA10D1	CCD-102	B210	5HK-D10
C54	510		DI-500	DD-511	LA10T5-C4	CCD-501	GP350	5GA-T50
C55	510		DI-500	DD-511	LA10T5-C4	CCD-501	GP350	5GA-T50
C56	.01		BPD-01	DD-103	BYA10S1	CCD-103	B110	5HK-S10
C57	.01		BPD-01	DD-103	BYA10S1	CCD-103	B110	5HK-S10
C58	.1 150V			DF-104				TH-P10
C59	.01		BPD-01	DD-103	BYA10S1	CCD-103	B110	5HK-S10
C60	.01		BPD-01	DD-103	BYA10S1	CCD-103	B110	5HK-S10
C61	.1 150V			DF-104				TH-P10
C62	.01		BPD-01	DD-103	BYA10S1	CCD-103	B110	5HK-S10
C63	.001		BPD-001	DD-102	BYA10D1	CCD-102	B210	5HK-D10
C64	.001		BPD-001	DD-102	BYA10D1	CCD-102	B210	5HK-D10
C65	100 5%		ADM-15-101	CPR-100J	CD15F101K	DM-15-101J	CNO310	MS-31
C66	.001		BPD-001	DD-102	BYA10D1	CCD-102	B210	5HK-D10
C67	.001		BPD-001	DD-102	BYA10D1	CCD-102	B210	5HK-D10
C68	.1 500V			DF-104				5HK-P10
C69	.01		BPD-01	DD-103	BYA10S1	CCD-103	B110	5HK-S10
C70	.001		BPD-001	DD-102	BYA10D1	CCD-102	B210	5HK-D10
C71	.001		BPD-001	DD-102	BYA10D1	CCD-102	B210	5HK-D10
C72	.1 500V	(.01) †		DF-104				5HK-P10
C73	5-25 NPO							
C74	.01		BPD-01	DD-103	BYA10S1	CCD-103	B110	5HK-S10
C75	22 NPO 10%		NPO-DI 22	DTZ-22	C10Q22C	CCTO-220	CNO422	10TCC-Q22
C76	1-8			829-10				
C77	.01		BPD-01	DD-103	BYA10S1	CCD-103	B110	5HK-S10
C78	100 5%		ADM-15-101	CPR-100J	CD15F101J	DM-15-101J	CNO310	MS-31
C79	.01		BPD-01	DD-103	BYA10S1	CCD-103	B110	5HK-S10
C80	.001		BPD-001	DD-102	BYA10D1	CCD-102	B210	5HK-D10
C81	30 10%	(27pf) †	ADM-15-300	CPR-30J	CD15E300J	DM-15-300K	CNO427	MS-43
C82	.001		BPD-001	DD-102	BYA10D1	CCD-102	B210	5HK-D10
C83	.001		BPD-001	DD-102	BYA10D1	CCD-102	B210	5HK-D10
C84	.001		BPD-001	DD-102	BYA10D1	CCD-102	B210	5HK-D10
C85	.001		BPD-001	DD-102	BYA10D1	CCD-102	B210	5HK-D10
C86	.01		BPD-01	DD-103	BYA10S1	CCD-103	B110	5HK-S10
C87	5-25 NPO							
C88	10-100							
C89	.68pf							
C90	.1 150V			DF-104				TH-P10
C91	.01		BPD-01	DD-103	BYA10S1	CCD-103	B110	5HK-S10
C92	.1 150V			DF-104				TH-P10
C93	.1 150V			DF-104				TH-P10
C94	.01		BPD-01	DD-103	BYA10S1	CCD-103	B110	5HK-S10
C95	.47 200V		P288N-47		PM2P47	2DP-5-474	PVC2047	2TM-P47
C96	.01		BPD-01	DD-103	BYA10S1	CCD-103	B110	5HK-S10
C97	.15 600V		DBE6P15		PM6P15	6DP-5-154	PVC6015	6TM-P15
C98	.1 500V			DF-104				5HK-P10
C99	.01		BPD-01	DD-103	BYA10S1	CCD-103	B110	5HK-S10
C100	510	①	DI-500	DD-511	LA10T5-C4	CCD-501	GP350	5GA-T50
C101	.001	①	BPD-001	DD-102	BYA10D1	CCD-102	B210	5HK-D10
C102	3-18							

* Not normally in distributor's stock. Available thru distributor on order to manufacturer.
† Alternate Value.
① Not used in some versions.

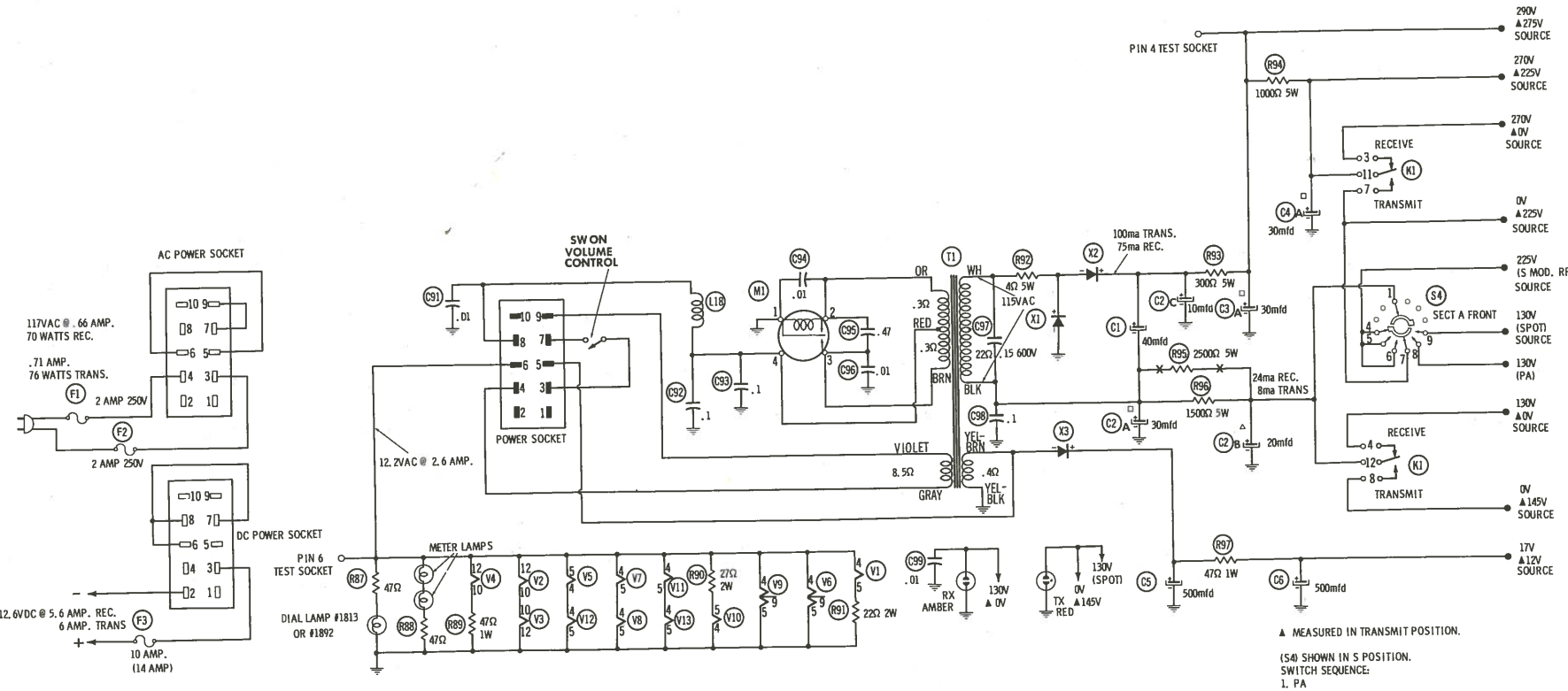

⊖ See parts list for alternate value or application.
1. Voltage measurements taken with vacuum tube voltmeter.
2. All controls set for normal operation, no signal applied.
3. Measured values are from socket pin or terminal to common ground.
4. All terminals viewed from bottom unless otherwise designated.
5. Numbers assigned to terminals may not be found on the unit.
6. Supply voltage maintained at rated value for voltage readings.

A PHOTOFACT STANDARD NOTATION SCHEMATIC

Resistors are 1/2 watt or less and rated 10% or 20% unless otherwise indicated.

▲ MEASURED IN TRANSMIT POSITION.

(S4) SHOWN IN S POSITION.
SWITCH SEQUENCE:
1. PA
2. SPOT
3. S
4. MOD.
5. RF

POLY-COMM MODEL PRO

POLY-COMM MODEL PRO

PARTS LIST AND DESCRIPTION (CONTINUED)

CONTROLS

All wattages 1/2 watt, or less, unless otherwise listed.

ITEM No.	USE	RESIST-ANCE	REPLACEMENT DATA				
			POLY-COMM PART No.	CENTRALAB PART No.	CLAROSTAT PART No.	CTS-IRC PART No.	MALLORY PART No.
R1	Volume & Switch	1meg		F2-1meg, SRS012, KR-1 or (B-70-S)	A47-1meg-Z, RS-2, SWE-12	Q13-137, 76-1, or (BU2, CF26, SS3, GC)*	UA16A, SK750, US41 or (RU16A, SL38, SK750, US41) or (U53, US26)
R2A	Squelch	10K		F2-10K, R1-25K,		† QJ-1918R	FA14A, RU153L,
B	Squelch Limit	15K		FSP014 ①			OFS1687 ①, IK625
R3	Selectivity	5000Ω		F1-5000, SRS012 or (B-10)	A47-5000-S, RS-2	Q11-114, or (BU2, CF8, SS3, DC1)*	UA53L, SL750 or (RU53L, SL38, SK750) or (U14)
R4	Modulation	250K		F2-250K, SRS012 or (B-51)	A47-250K-Z, RS-2	Q13-130 or (BU2, CF23, SS3, DC1)*	UA254A, SK750, or (RU254A, SL38, SK750) or (U44)
R5	Meter Zero	5000Ω (2W)		V-5000	U39-5000	112-5000	MR5000F
R6	Full Scale Adj.	150Ω (2W)		V-150	U39-150	112-150	MR150F
R7	RF Watts Adj.	5000Ω (2W)		V-5000	U39-5000	112-5000	MR5000F

† "CONCENTRIKIT" Equivalent: K-6 Kit with Base Elements and Shafts: B13-116, P24-030 ①(Panel)
"SNAPTROL" Equivalent: BU5, CF61, CR5, SF62 ①SR100, DC1 B11-118, R15-005 (Rear)
① Cut Shaft to desired length.
* "SNAPTROL"

RESISTORS (Power and Special)

ITEM No.	RATING	REPLACEMENT DATA		
		IRC PART No.	WORKMAN PART No.	REMARKS
R80	680Ω 5W			(1000Ω) †
R92	4Ω 5W	PW5-4	5W-SQ4	
R93	300Ω 5W	PW5-300	5W-SQ 300	

ITEM No.	RATING	REPLACEMENT DATA		
		IRC PART No.	WORKMAN PART No.	REMARKS
R94	1000Ω 5W	PW5-1000	5W-SW 1000	
R95	2500Ω 5W	PW5-2500	5W-SQ 2500	Note 1
R96	1500Ω 5W	PW5-1500	5W-SQ 1500	

† Alternate Value
Note 1. Not used in some versions.

COILS (RF-IF)

ITEM No.	USE	REPLACEMENT DATA					
		POLY-COMM PART No.	MEISSNER PART No.	MERIT PART No.	MILLER PART No.	STANCOR PART No.	WORKMAN PART No.
L1	Antenna Matching						
L2	RF						
L3	Tunable Osc.						
L4	Crystal Osc. Plate						
L5	1st IF (6MC)						
L6	2nd IF (6MC)						
L7	"Q" Mult. Plate						
L8	RF Choke (1MH)		19-2032		73F103AF		
L9	3rd IF (455KC)						
L10	4th IF (455KC)						
L11	5th IF (455KC)						
L12	Transmit Osc. Plate		19-2015		74F826AP	RTC-8521	T960
L13	Tripler Plate						
L14	RF Choke (8uh)		19-2015		74F826AP	RTC-8521	T960
L15	Final Plate						
L16	RF Choke (1MH)		19-2032		73F103AF		
L17	RF Choke (4.7uh)				74F476AP		T819
L18	Hash Choke						

TRANSFORMER (POWER)

ITEM No.	RATING			REPLACEMENT DATA					NOTES
	PRI. 1	SEC. 1	SEC. 2	POLY-COMM PART No.	MERIT PART No.	STANCOR PART No.	THORDARSON PART No.	TRIAD PART No.	
T1	117VAC @ .71A▲	117VAC @ .1A▲	12.2VAC @ 2.7A ▲						▲ Transmit
	PRI. 2	SEC. 4	SEC. 5						
	12.6VDC @ 3.4A▲								

TRANSFORMER (AUDIO OUTPUT)

ITEM No.	IMPEDANCE		REPLACEMENT DATA					NOTES
	PRI.	SEC.1	POLY-COMM PART No.	MERIT PART No.	STANCOR PART No.	THORDARSON PART No.	TRIAD PART No.	
T2	4800Ω	3-4Ω						
		SEC. 2						
		7000Ω						

SPEAKER

ITEM No.	TYPE	REPLACEMENT DATA		NOTES
		POLY-COMM PART No.	QUAM PART No.	
SP1	2 1/2" PM 3-4Ω		25A05	

FUSES

ITEM No.	TYPE	RATING	REPLACEMENT DATA					
			POLY-COMM PART No.		LITTELFUSE PART No.		BUSS PART No.	
			FUSE	HOLDER	FUSE	HOLDER	FUSE	HOLDER
F1	AGC2	2A 250V			312002		AGC 2	
F2	AGC2	2A 250V			312002		AGC 2	
F3	AGC 10 AGC 14	10A 14A			311010	155020	AGC 10	HDJ-B

VIBRATOR

ITEM No.	TYPE	INPUT VOLTS	FRE-QUENCY	REPLACEMENT DATA			NOTES
				POLY-COMM PART No.	CORNELL-DUBILIER PART No.	MALLORY PART No.	
M1	Interrupter	12.6	115∿		6371	G1601	

MISCELLANEOUS

ITEM No.	PART NAME	POLY-COMM PART No.	NOTES
K1	Relay		Transmit-Receive (4PDT, 12VDC)
M2	5545KC Crystal		2nd Receive Oscillator
M3	9011-666KC Crystal		Transmit Oscillator (Note 1)
M4	9021-666KC Crystal		Transmit Oscillator (Note 1)
M5	9028-333KC Crystal		Transmit Oscillator (Note 1)
M6	9045-000KC Crystal		Transmit Oscillator (Note 1)
M7	Meter		0-1MA
M8	Microphone		Ceramic
S1	Switch		Transmitter Channel Selector (24-Position, Rotary)
S2	Switch		Receiver Crystal-Tune (DPDT, Slide)
S3	Switch		"Q" Multiplier Selector (2-Position, Rotary)
S4	Switch		Meter Function (5-Position, Rotary)
S5	Switch		ANL (SPST Slide)

Note 1. When ordering crystals, specify model and serial number of transceiver, channel desired and frequency of the crystal.