SAMS PHOTOFACT® CB RADIO SERIES

VOL 4 CB-4

SAMS PHOTOFACT®

CB RADIO SERIES

CB-4

4

SEPTEMBER 1963

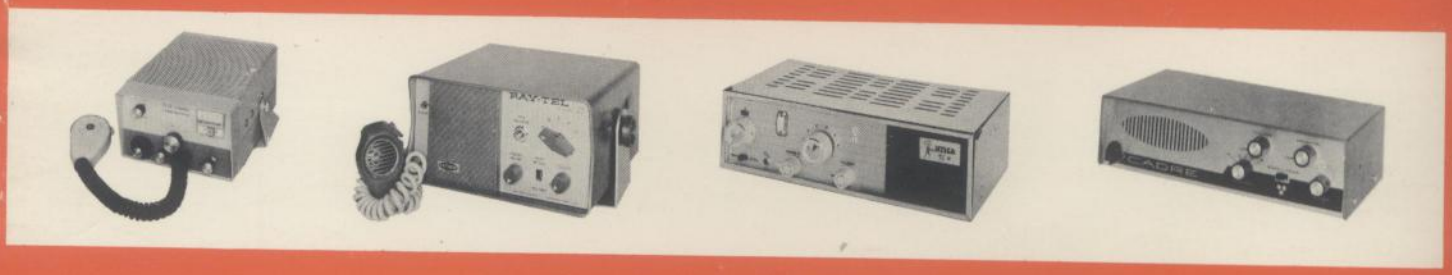

CONTENTS

HOWARD W. SAMS Indianapolis 6, Indiana

$3.50
$4.40 IN CANADA
Cat. No. CB-4

SAMS PHOTOFACT®

CB RADIO SERIES

VOLUME 4

by the Howard W. Sams ENGINEERING STAFF

HOWARD W. SAMS & CO., INC.®
INDIANAPOLIS 6, INDIANA

FIRST PRINTING—SEPTEMBER, 1963

SECOND PRINTING—MAY, 1964

THIRD PRINTING—MARCH, 1966

FOURTH PRINTING—DECEMBER, 1967

FIFTH PRINTING—FEBRUARY, 1969

SIXTH PRINTING—MAY, 1970
SEVENTH PRINTING—AUGUST, 1972
EIGHTH PRINTING—NOVEMBER, 1973
NINTH PRINTING—OCTOBER, 1974
TENTH PRINTING—JULY, 1975
ELEVENTH PRINTING—JANUARY, 1976
TWELFTH PRINTING—JULY, 1976

C B RADIO SERIES

VOLUME 4

Library of Congress Catalog Card Number: 61-18464

NOTICE

ONLY THOSE PERSONS PROPERLY LICENSED ARE PERMITTED TO MAKE REPAIRS OR ADJUSTMENTS WHICH MAY RESULT IN ILLEGAL OPERATION. (REFER TO FCC RULES & REGULATIONS PART 19, SUBPART D, SECTION 19.71.)

C B RADIO SERIES

TABLE OF CONTENTS

TABLE OF CONTENTS

TRADE NAME: Airline Model GAS-587

SUPPLIER: Montgomery Ward & Co., 619 Chicago Ave., Chicago 7, Illinois

TYPE SET: 9 Tube Citizens Band Transceiver

POWER SUPPLY: 110 – 120 Volts AC, 60 Cycles (or) 12 VDC (or) 32 VDC

RATING: 50 Watts, .45 Amp. @117 Volts AC

TUNING RANGE: Any 5 of Citizens Band Channels 1 thru 22

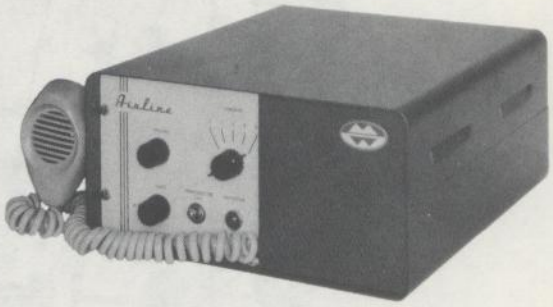

ALIGNMENT INSTRUCTIONS

RECEIVER ALIGNMENT

Output meter across voice coil.
Volume control should be at maximum position. Output of signal generator should be no higher than necessary to obtain an output reading.

SIGNAL GENERATOR	CHANNEL	ADJUST	REMARKS
High side thru .1mfd to pin 2 of V2, low side to chassis. (Tune to 455KC 400~ Mod.)	Any	A1, A2, A3, A4	Adjust for maximum.
Across antenna terminal. (Tune to channel freq.)	Center Channel Used.	A5, A6, A7	Adjust for maximum.

TRANSMITTER ALIGNMENT

ONLY THOSE PERSONS PROPERLY LICENSED ARE PERMITTED TO MAKE REPAIRS OR ADJUSTMENTS WHICH MAY RESULT IN ILLEGAL OPERATION. (REFER TO FCC RULES & REGULATIONS PART 19, SUBPART D, SECTION 19.71)

INDICATOR	ADJUST	REMARKS
Accurate frequency measuring device.	A8	Adjust for exact frequency of center channel used.
DC VTVM connected from pin 7 (grid) of V7 to chassis.	A9	Adjust for maximum deflection, then back off just below peak on side of gradual dropoff.
"	A10	Adjust for maximum deflection.
Panel lamp and DC milliammeter connected to 2-screw terminal strip on top side of chassis.	A11, A12, A13	Preset A11 nearly snug. Adjust A12 for MINIMUM. Connect antenna. Adjust A13 for maximum front panel lamp brilliance. Meter should indicate 25MA. If not, disconnect antenna, rotate A11 counterclockwise a turn. Adjust A12 for MINIMUM. Connect antenna. Adjust A13 for maximum lamp brilliance. If meter does not indicate 25MA, repeat procedure. If more than 25MA is indicated, increase capacity of A11 and readjust A12 and A13.

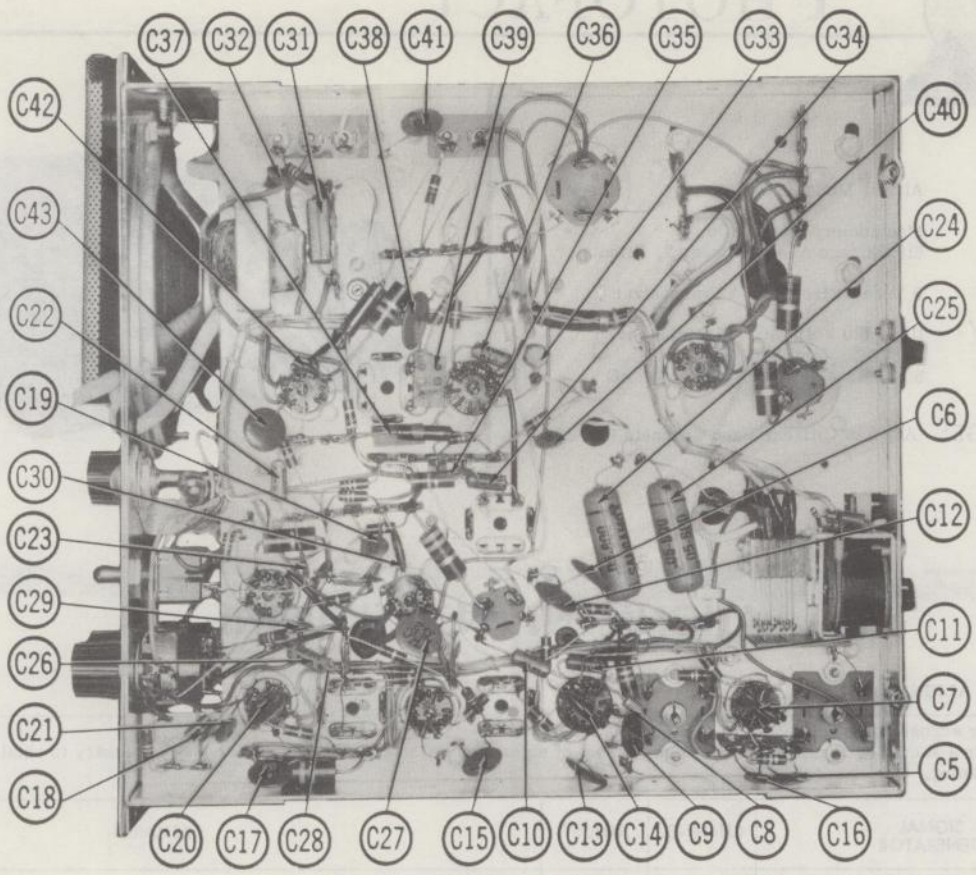
C37
C32
C31
C38
C41
C39
C36
C35
C33
C34
C42
C40
C43
C24
C22
C25
C19
C6
C30
C12
C23
C29
C11
C26
C7
C21
C5
C18
C20
C17
C28
C27
C15
C10
C13
C14
C9
C8
C16

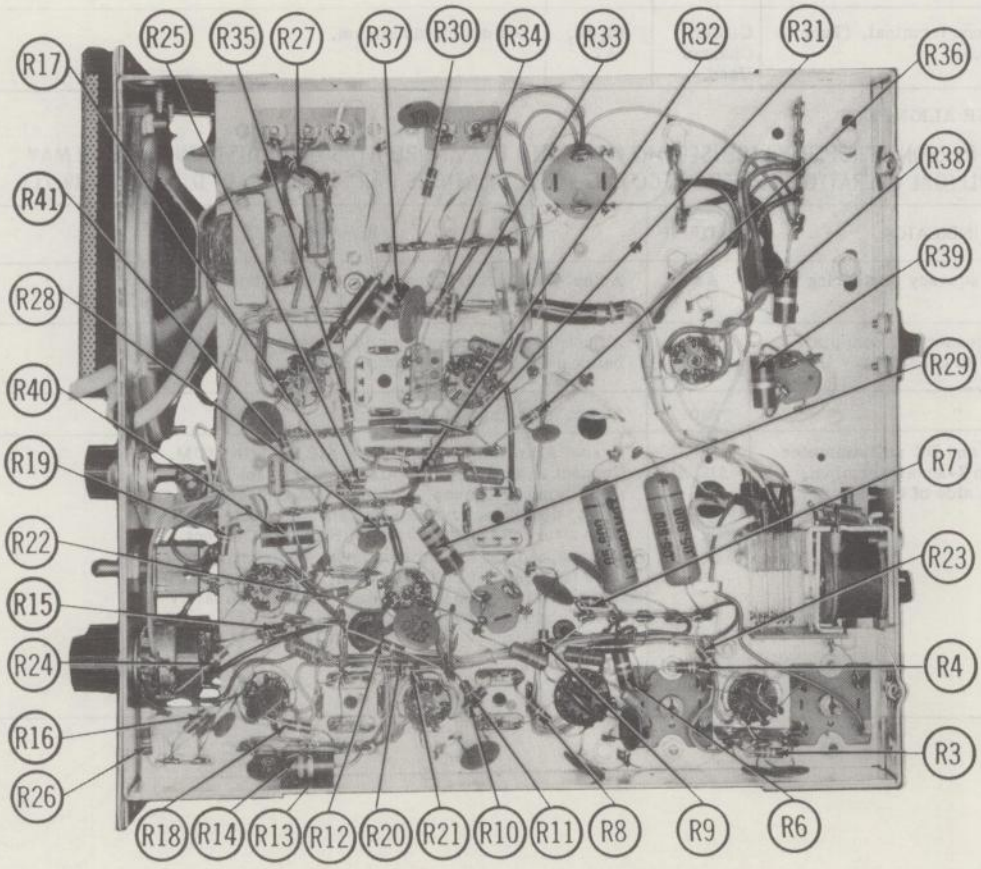
R25
R35
R27
R37
R30
R34
R33
R32
R31
R17
R36
R38
R41
R39
R28
R29
R40
R7
R19
R23
R22
R15
R4
R24
R16
R3
R26
R18
R14
R13
R12
R20
R21
R10
R11
R8
R9
R6

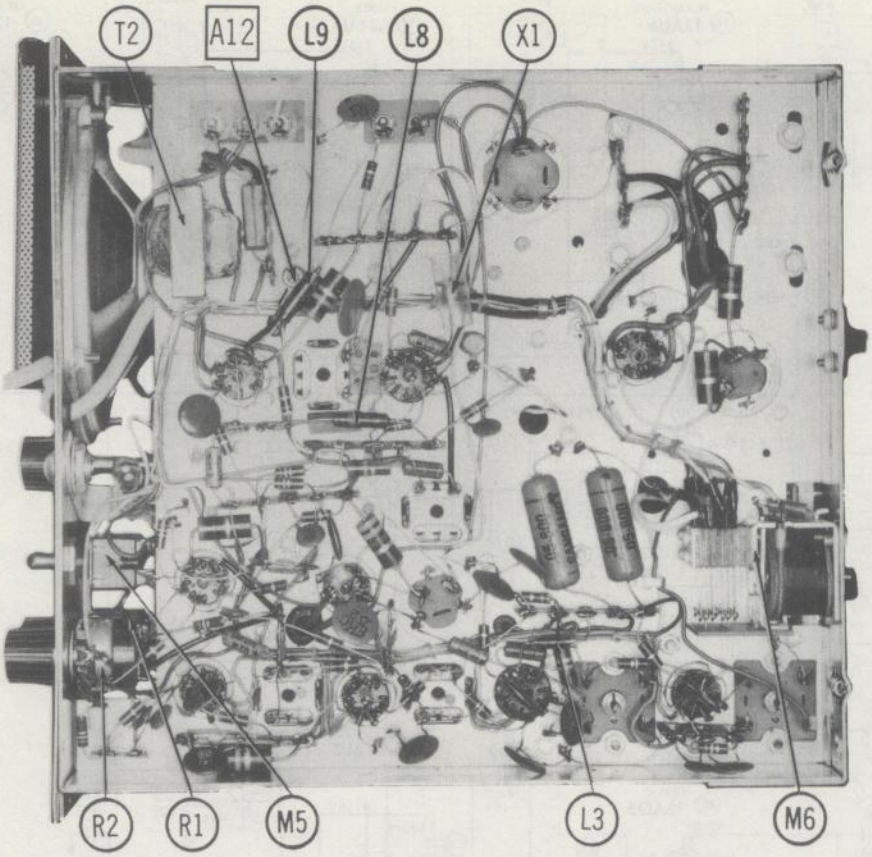
T2
A12
L9
L8
X1
R2
R1
M5
L3
M6

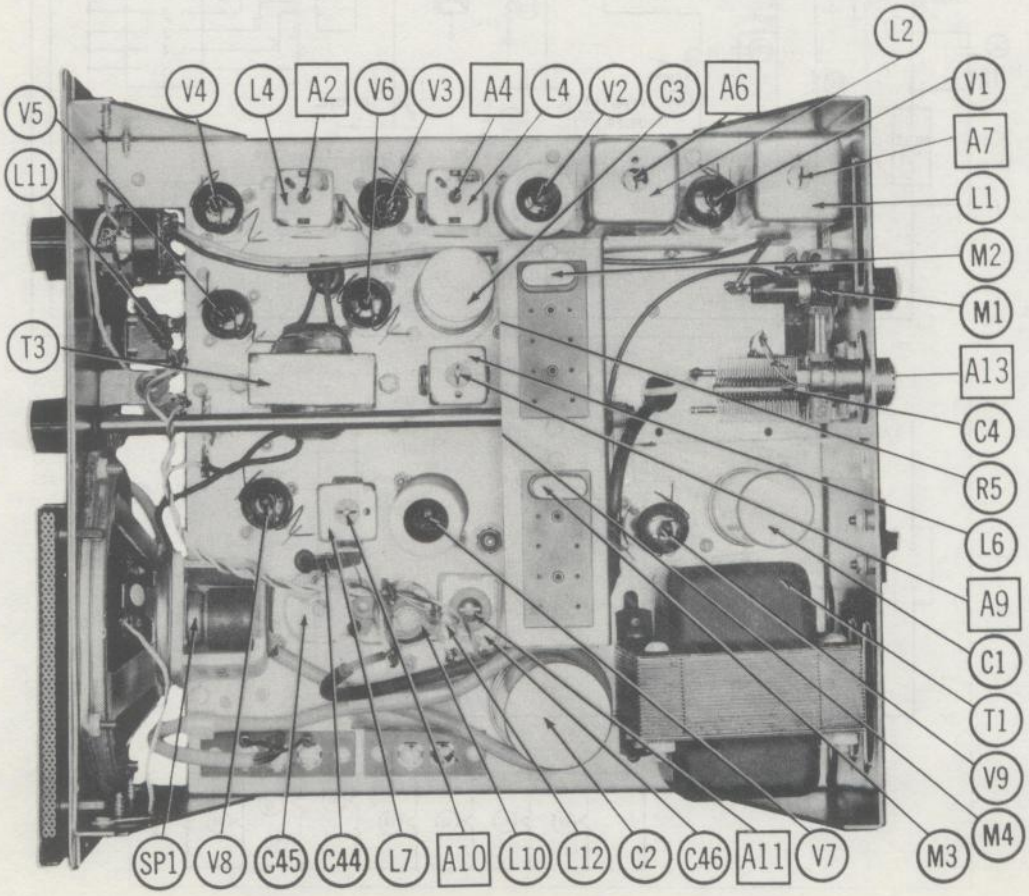
L2
V4
L4
A2
V6
V3
A4
L4
V2
C3
A6
V1
V5
A7
L11
L1
M2
M1
T3
A13
C4
R5
L6
A9
C1
T1
V9
M4
SP1
V8
C45
C44
L7
A10
L10
L12
C2
C46
A11
V7
M3

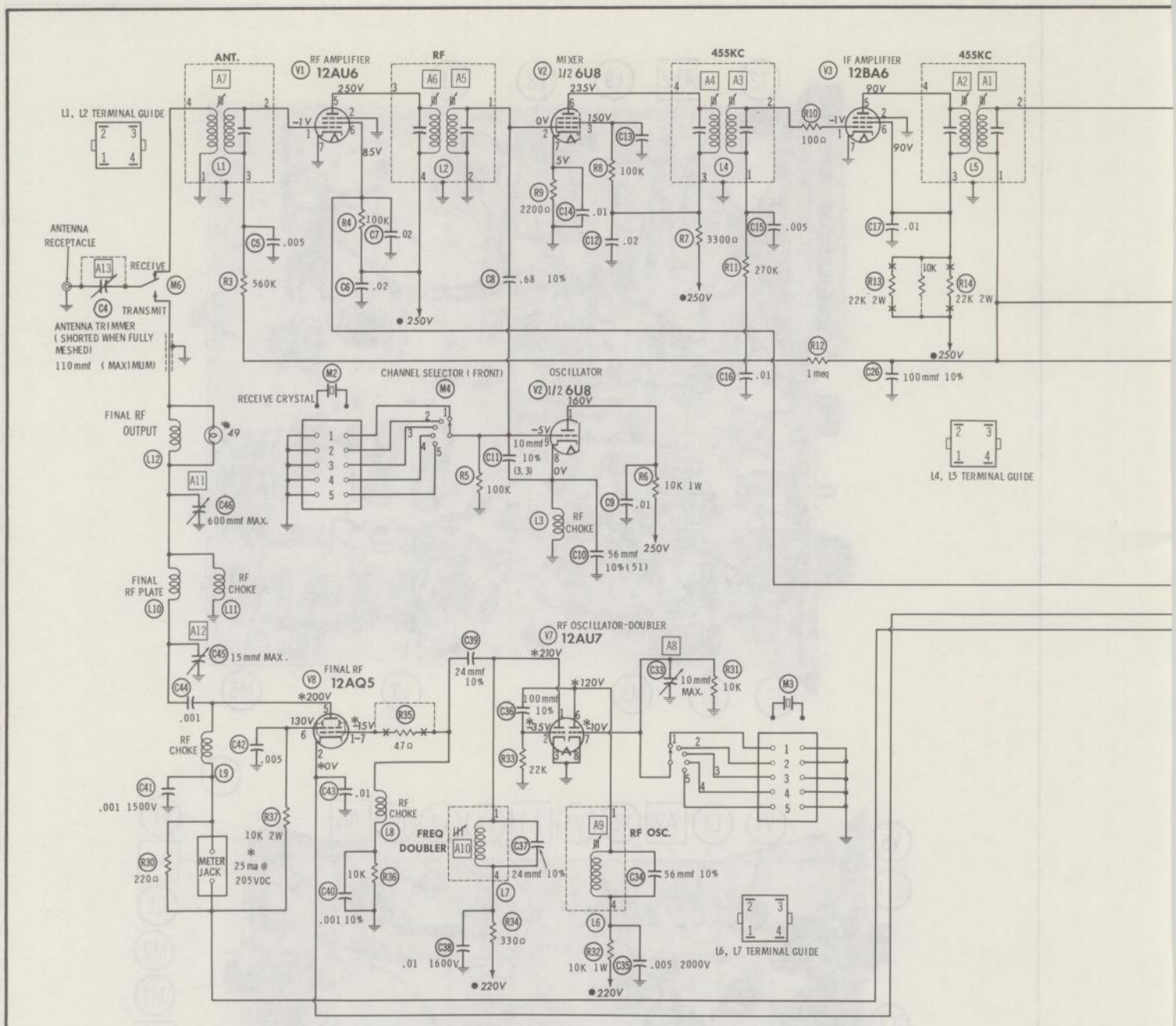
ANT.
RF AMPLIFIER
12AU6
RF
MIXER
1/2 6U8
455KC
IF AMPLIFIER
12BA6
455KC
L1, L2 TERMINAL GUIDE
ANTENNA RECEPTACLE
RECEIVE
TRANSMIT
ANTENNA TRIMMER (SHORTED WHEN FULLY MESHED)
110mmf (MAXIMUM)
RECEIVE CRYSTAL
CHANNEL SELECTOR (FRONT)
OSCILLATOR
1/2 6U8
FINAL RF OUTPUT
600mmf MAX.
FINAL RF PLATE
RF CHOKE
15mmf MAX.
FINAL RF
12AQ5
RF OSCILLATOR-DOUBLER
12AU7
METER JACK
25ma @ 205VDC
FREQ DOUBLER
RF OSC.
L4, L5 TERMINAL GUIDE
L6, L7 TERMINAL GUIDE

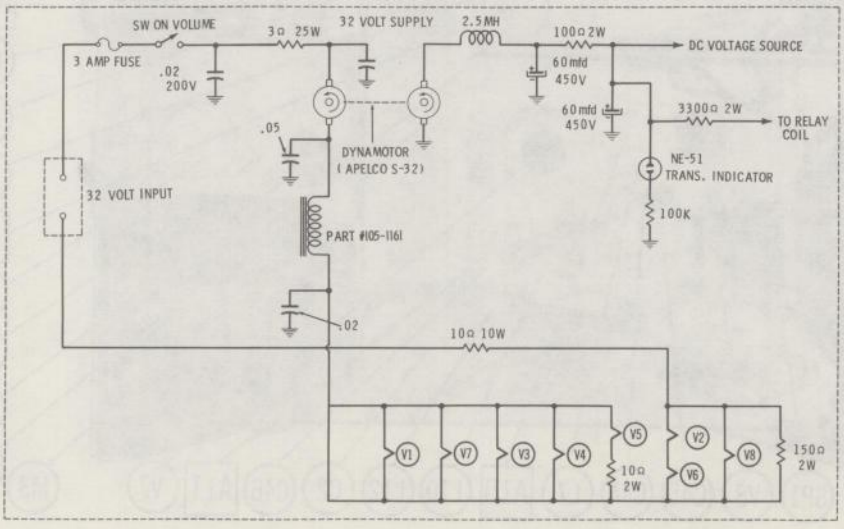
SW ON VOLUME
3 AMP FUSE
32 VOLT SUPPLY
DC VOLTAGE SOURCE
TO RELAY COIL
DYNAMOTOR (APELCO S-32)
NE-51 TRANS. INDICATOR
32 VOLT INPUT
PART #105-1161

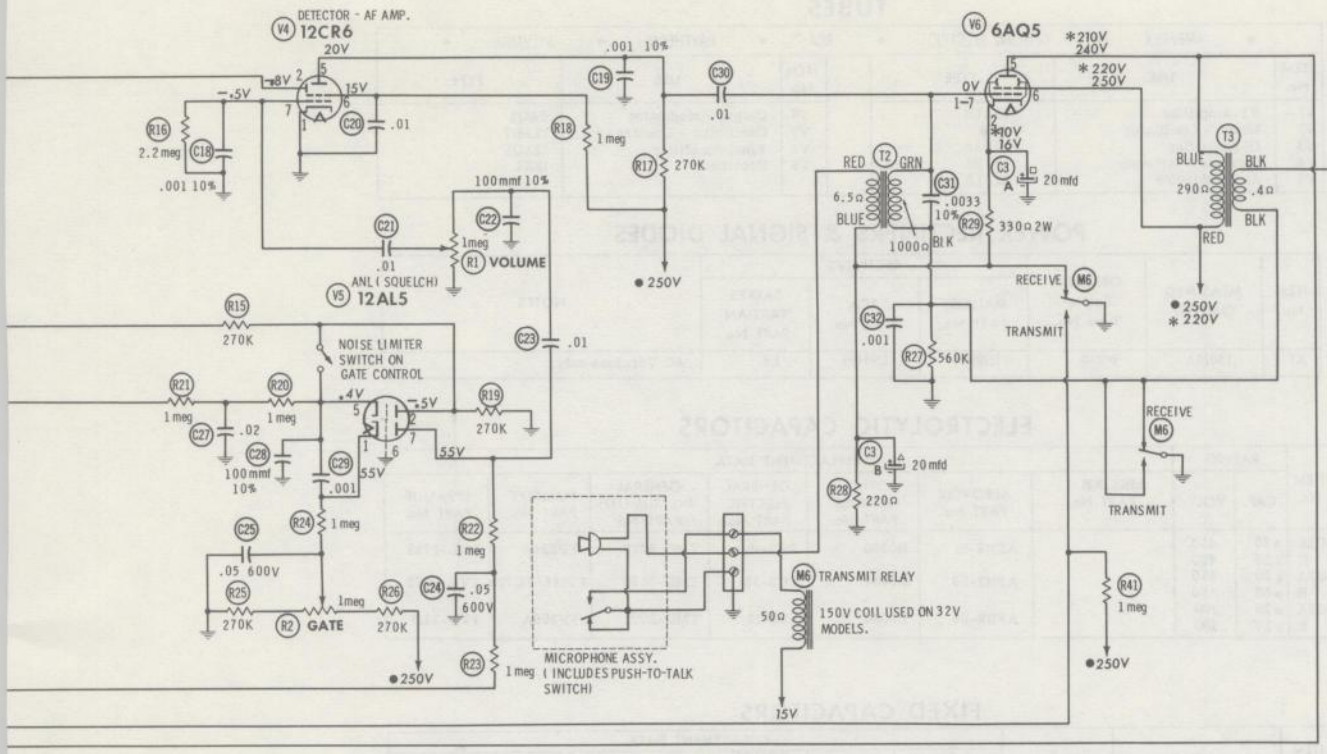

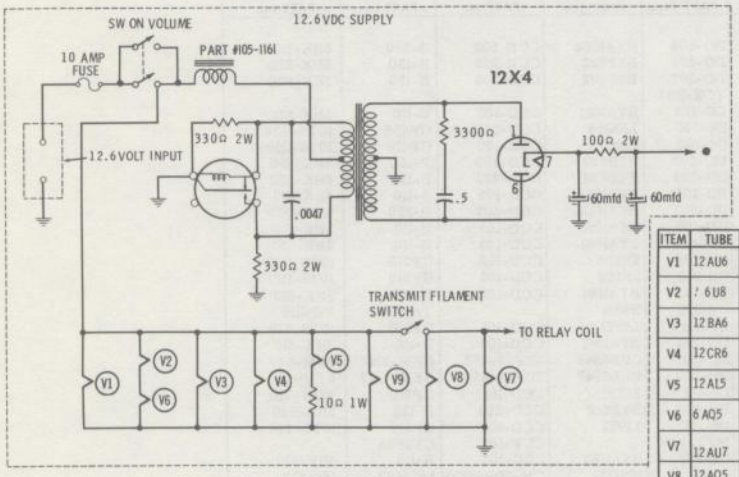

⊖ See parts list for alternate value or application.
1. Voltage measurements taken with vacuum tube voltmeter.
2. All controls set for normal operation, no signal applied.
3. Measured values are from socket pin or terminal to common ground.
4. All terminals viewed from bottom unless otherwise designated.
5. Numbers assigned to terminals may not be found on the unit.
6. Supply voltage maintained at rated value for voltage readings.

RESISTANCE READINGS

ITEM	TUBE	Pin 1	Pin 2	Pin 3	Pin 4	Pin 5	Pin 6	Pin 7	Pin 8	Pin 9
V1	12AU6	2 meg	0Ω	FIL	FIL	†200Ω	†100K	0Ω		
V2	6U8	†10.2K	0Ω	†100K	FIL	FIL	†3500Ω	2200Ω	0Ω	100K
V3	12BA6	2 meg	0Ω	FIL	FIL	†11.2K	†11.2K	0Ω		
V4	12CR6	0Ω	540K	FIL	FIL	†270K	†1 meg	2.2 meg		
V5	12AL5	†1.2 meg	270K	FIL	FIL	2.5 meg	0Ω	†2.1 meg		
V6	6AQ5	560K *1000Ω	330Ω *550Ω	FIL	FIL	†465Ω	†200Ω	560K *820Ω		
V7	12AU7	*†550Ω	22K	0Ω	FIL	FIL	*†10.2K	10K	0Ω	FIL
V8	12AQ5	NC	*0Ω	FIL	FIL	†685Ω	†10.2K	10K		
V9	12X4	150Ω	TP	FIL	FIL	TP	150Ω	¶		

¶ THIS READING WILL VARY DEPENDING UPON THE CONDITION OF THE ELECTROLYTIC IN THE CIRCUIT.
† MEASURED FROM PIN 7 OF V9. * MEASURED IN "TRANSMIT" POSITION.
NC NO CONNECTION TP TIE POINT

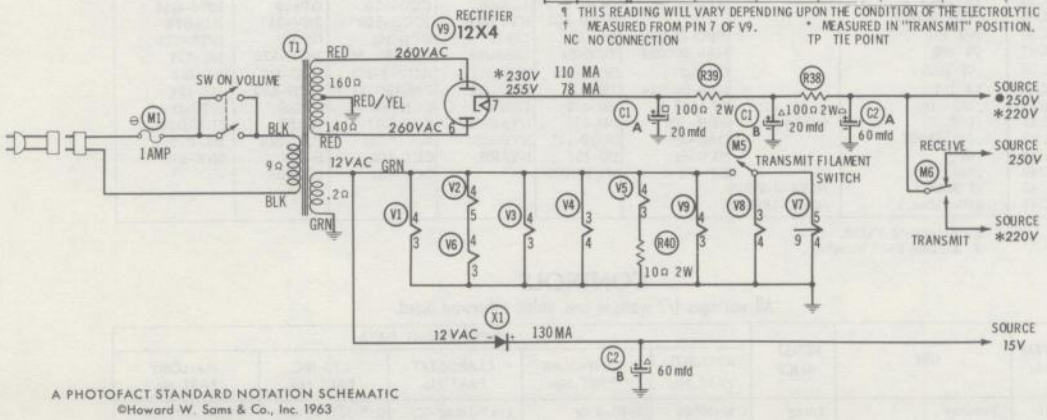

A PHOTOFACT STANDARD NOTATION SCHEMATIC

AIRLINE MODEL GAS-587

PARTS LIST AND DESCRIPTION

TUBES

◆ AMPEREX ◆ GENERAL ELECTRIC ◆ RCA ◆ RAYTHEON ◆ SYLVANIA ◆

ITEM No.	USE	TYPE	ITEM No.	USE	TYPE
V1	RF Amplifier	12AU6	V6	Output - Modulator	6AQ5
V2	Mixer - Oscillator	6U8	V7	Oscillator - Doubler	12AU7
V3	IF Amplifier	12BA6	V8	Final Amplifier	12AQ5
V4	Detector - AF Amp.	12CR6	V9	Rectifier	12X4
V5	ANL - Squelch	12AL5			

POWER RECTIFIERS & SIGNAL DIODES

ITEM No.	MEASURED CURRENT	ORIGINAL Part or Type No.	RECTIFIERS			NOTES
			MALLORY PART No.	RCA PART No.	SARKES TARZIAN PART No.	
X1	130MA	PT-5	1N2070	1N3194	F4	AC Versions only.

ELECTROLYTIC CAPACITORS

ITEM No.	RATING		REPLACEMENT DATA						
	CAP.	VOLT.	AIRLINE PART No.	AEROVOX PART No.	CORNELL-DUBILIER PART No.	GENERAL ELECTRIC PART No.	GENERAL INSTRUMENT PART No.	MALLORY PART No.	SPRAGUE PART No.
C1A	■20	450		AFH2-51	B0390	XC2-15	TMD-2625	FP234A	TVL-2755
B	▲20	450							
C2A	▲60	450		AFH2-59	B0464	XC2-33	TMD-2670	FP148/TC795	TVL-2772
B	■60	450							
C3A	■20	100		AFH2-08	B0090	XC2-13	TMD-2075	FP208A	TVL-2415
B	▲20	100							

FIXED CAPACITORS

ITEM No.	RATING	REMARKS	REPLACEMENT DATA					
			AEROVOX PART No.	CENTRALAB PART No.	CORNELL-DUBILIER PART No.	ELMENCO PART No.	MALLORY PART No.	SPRAGUE PART No.
C4	110 (max.)	#24E16-2						
C5	.005		BPD-005	DD-502	BYA10D5	CCD-502	B-250	5HK-D50
C6	.02		BPD-02	DD-203	BYB6S2	CCD-203	B-120	5HK-S20
C7	.02		BPD-02	DD-203	BYB6S2	CCD-203	B-120	5HK-S20
C8	.68 10%		NPO-SI .68	TCZ-R68				
C9	.01		BPD-01	DD-103	BYA10S1	CCD-103	B-110	5HK-S10
C10	56 10%	(51) †	NPO-SI 56	D6-560	L10Q56	CCD-560	GP456	10TS-Q56
C11	10 10%	(3.3) †	NPO-SI 10	D6-100	L10Q1	CCD-100	GP410	10TS-Q10
C12	.02		BPD-02	DD-203	BYB6S2	CCD-203	B-120	5HK-S20
C13	.02		BPD-02	DD-203	BYB6S2	CCD-203	B-120	5HK-S20
C14	.01		BPD-01	DD-103	BYA10S1	CCD-103	B-110	5HK-S10
C15	.005		BPD-005	DD-502	BYA10D5	CCD-502	B-250	5HK-D50
C16	.01		BPD-01	DD-103	BYA10S1	CCD-103	B-110	5HK-S10
C17	.01		BPD-01	DD-103	BYA10S1	CCD-103	B-110	5HK-S10
C18	.001 10%		DI-1000	DD-102	5R5D1	CCD-102	GP210	10TS-D10
C19	.001 10%		DI-1000	DD-102	5R5D1	CCD-102	GP210	10TS-D10
C20	.01		BPD-01	DD-103	BYA10S1	CCD-103	B-110	5HK-S10
C21	.01 50V		TTD-01	CK-103	H05S1		TA-110	TG-S10
C22	100 10%		NPO-SI 100	D6-101	L10T1	CCD-101	GP310	10TS-T10
C23	.01		BPD-01	DD-103	BYA10S1	CCD-103	B-110	5HK-S10
C24	.05 600V		P688N-047	DD-503	CUB6S47	6DP-3-473	GEM-6147	6TM-S47
C25	.05 600V		P688N-047	DD-503	CUB6S47	6DP-3-473	GEM-6147	6TM-S47
C26	100 10%		NPO-SI 100	D6-101	L10T1	CCD-101	GP310	10TS-T10
C27	.02	(.01) †	BPD-02	DD-203	BYB6S2	CCD-203	B-120	5HK-S20
C28	100 10%		NPO-SI 100	D6-101	L10T1	CCD-101	GP310	10TS-T10
C29	.001		EF-001	MFT-1000		CCF-102	CT280A	
C30	.01		BPD-01	DD-103	BYA10S1	CCD-103	B-110	5HK-S10
C31	.0033 10%		1469-0033		1R5D33	CM-20B-332K	MCJ462	MS-233
C32	.001		EF-001	MFT-1000		CCF-102	CT280A	
C33	10 (Max.)							
C34	56 10%		NPO-SI 56	D6-560	L10Q56	CCD-560	GP456	10TS-Q56
C35	.005 2000V			DD30-502	HVC20D5	3CCD-502	2HV-247	BL-D50
C36	100 10%		NPO-SI 100	D6-101	L10T1	CCD-101	GP310	10TS-T10
C37	24 10%		1469-000024	TCZ-24	22R5Q24	CM-19B-240K	MCB-220	MS-424
C38	.01 1600V		DAC-27	DD16-103	HVE16S1	16DP-3-103	UAC-110	BL-S10
C39	24 10%		1469-000024	TCZ-24	22R5Q24	CM-19B-240K	MCB-220	MS-424
C40	.001 10%		DI-1000	DD-102	5R5D1	CCD-102	GP210	10TS-D10
C41	.005	(.01) †	BPD-005	DD-502	BYA10D5	CCD-502	B-250	5HK-D50
C42	.001 1500V		DAC-2	DD30-102	HVB20D1	3CCD-102	UAC-210	BL-D10
C43	.01		BPD-01	DD-103	BYA10S1	CCD-103	B-110	5HK-S10
C44	.001		EF-001	MFT-1000		CCF-102	CT280A	
C45	15 (Max.)	#CT3-0-21SP						
C46	600 (Max.)	#CHC-482002						

† Alternate Value.
# Airline Part Number.

CONTROLS

All wattages 1/2 watt, or less, unless otherwise listed.

ITEM No.	USE	RESISTANCE	REPLACEMENT DATA				
			AIRLINE PART No.	CENTRALAB PART No.	CLAROSTAT PART No.	CTS-IRC PART No.	MALLORY PART No.
R1	Volume Power Switch	1meg	CM-16666	B-70-S or (F2-1meg, SU204, KR-4)	A-47-1meg-Z, FS-3, SWE-20	Q13-137, 76-2	(UA16A, SF1000, US-41) or(RU16A, SF1000, SL38, US42)
R2	Gate Control Noise Limiter Switch	1meg	CM-18888	B-70-S or (F2-1meg, SU204, KR-1)	A-47-1meg-Z, FS-3, SWE-12	Q13-137, 76-1	(U-53, US-26) or (UA16A, SF1000, US-41) or(RU16A, SF1000, SL38, US-41)

PARTS LIST AND DESCRIPTION (CONTINUED)

COILS (RF-IF)

ITEM No.	USE	REPLACEMENT DATA					NOTES
		AIRLINE PART No.	MERIT PART No.	MILLER PART No.	STANCOR PART No.	WORKMAN PART No.	
L1	Antenna	TL-61					
L2	RF	TL-62					
L3	RF Choke (1.5uh)	207-11	BC-562	4604	RTC-8516	T856	
L4	IF Input	TL-34	BC-352	12-C1	RTC-8632	T607	
L5	IF Output	TL-35	BC-352	12-C2	RTC-8633	T608	
L6	RF Oscillator	TL-65					
L7	Frequency Doubler	TL-64					
L8	RF Choke (21MH)	220-11	BC-565	4609	RTC-8519	T959	
L9	RF Choke (21MH)	220-11	BC-565	4609	RTC-8519	T959	
L10	Final RF Plate	TL-63					
L11	RF Choke (55MH)			4624	RTC-8524	T862	
L12	Indicator Coil						

TRANSFORMER (POWER)

ITEM No.	RATING			REPLACEMENT DATA					NOTES
	PRI.	SEC. 1	SEC. 2	AIRLINE PART No.	MERIT PART No.	STANCOR PART No.	THORDARSON PART No.	TRIAD PART No.	
T1	117VAC @ .4A (.45A)*	520VCT @ .078A DC (.110A DC) *	13VAC @ 1.1A (1.6A)*	ST-89 † ST-86 ♦					† 117VAC Versions ♦ 12VDC Versions * Transmit

TRANSFORMER (MIC)

ITEM No.	TURNS RATIO		REPLACEMENT DATA					NOTES
	PRI.	SEC.	AIRLINE PART No.	MERIT PART No.	STANCOR PART No.	THORDARSON PART No.	TRIAD PART No.	
T2	1	35	ST-88					

TRANSFORMER (AUDIO OUTPUT)

ITEM No.	IMPEDANCE		REPLACEMENT DATA					NOTES
	PRI.	SEC.	AIRLINE PART No.	MERIT PART No.	STANCOR PART No.	THORDARSON PART No.	TRIAD PART No.	
T3	5000Ω	3-4Ω	ST-19	A-2930	A-3877	24S51	S-3X	

SPEAKER

ITEM No.	TYPE	REPLACEMENT DATA		NOTES
		AIRLINE PART No.	QUAM PART No.	
SP1	5" PM 3-4Ω	P5VA	5A05	

FUSES

ITEM No.	TYPE	RATING	REPLACEMENT DATA					
			AIRLINE PART No.		LITTELFUSE PART No.		BUSS PART No.	
			FUSE	HOLDER	FUSE	HOLDER	FUSE	HOLDER
M1	3AG	1A 250V	①		312001 (3AG 1A 250V)	342001	AGC 1	HKP
	AGC	10A 250V	②		312010 (AGC 10A)	342001	AGC 10	HKP
	MDL	3A	③					

① AC Version. ② 12-Volt Versions. ③ 32-Volt Versions.

VIBRATOR

ITEM No.	TYPE	INPUT VOLTS	FRE-QUENCY	REPLACEMENT DATA			NOTES
				AIRLINE PART No.	CORNELL-DUBILIER PART No.	MALLORY PART No.	
	Interrupter	12.6	115~	G-8301	6301	G-1601	12 Volt Versions only.

MISCELLANEOUS

ITEM No.	PART NAME	AIRLINE PART No.	NOTES
M2	Crystal		Receive, Order by Channel Desired
M3	Crystal		Transmit, Order by Channel Desired
M4	Switch	50209-H	Crystal Selector (2 Pole, 5 Position Wafer Switch)
M5	Switch	SRP	Transmitter Filament (SPST Toggle Switch)
M6	Relay	5791A	Transmit-Receive (11 Volt)
	Knob	214	Channel Selector
	Knob	GR-RM	Volume, Gate

WIRING DATA

General-use Hook-up Wire .... Use BELDEN No. 8530 (Solid) Available in 12 Colors
8524 (Stranded) Available in 12 Colors
Shielded Antenna Lead ..... Use BELDEN No. 8214 Lowest Loss (RG-8/U Type)
8237 Low Loss (RG-8/U)
8240 (Solid) Miniature (RG-58/U)
8259 (Stranded) Miniature (RG-58A/U)
Coiled Microphone Cable ..... Use BELDEN No. 8497 3 Conductor- 1 Shielded for Press-to-Talk (Neoprene)
8496 3 Conductor- 1 Shielded for Press-to-Talk (Vinyl)
Ignition Noise Suppression .... Use BELDEN No. 7300-Series Spark-Plug Sets
Bonding Strap ..... Use BELDEN No. 8661 (3/8 In.)

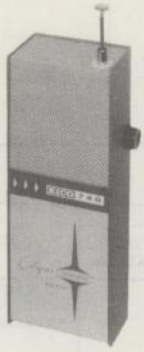

TRADE NAME: Eico Model 740

SUPPLIER: Electronic Instrument Co., Inc.
33-00 Northern Blvd.
Long Island City 1, N. Y.

TYPE SET: 9 Transistor Transceiver

POWER SUPPLY: 9.6 VDC (Rechargable Battery)

RATING: 8MA @ 9.6VDC (Receive, No Signal)
32MA @ 9.6VDC (Transmit, No Modulation)

TUNING RANGE: Any one of CB Channels 1 thru 22

ALIGNMENT INSTRUCTIONS

ALIGNMENT INSTRUCTIONS—READ CAREFULLY BEFORE ATTEMPTING ALIGNMENT

Suggested Alignment Tools:
A1, A2, A3, A4, A6..... GENERAL CEMENT #8274, 8275, 8728, 8729, 8989
WALSCO #2531, 2532
A5, A7, A8..... GENERAL CEMENT #8282, 8606, 8606-L, 9295, 9440
WALSCO #2526, 2543, 2544, 2545

RECEIVER ALIGNMENT

Connect DC VTVM across volume control.

	SIGNAL GENERATOR	CHANNEL	ADJUST	REMARKS
1.	High side to antenna terminal, common to ground. Tune to 455KC (Unmod.)		A1, A2, A3	Adjust for maximum deflection.
2.	High side to antenna terminal, common to ground. Tune to channel frequency.		A4	Adjust for maximum deflection. Rock A4 to each side of peak, noting rate of dropoff. Set A4 just below peak, on side of gradual dropoff.
3.	"		A5	Adjust for maximum deflection.

TRANSMITTER ALIGNMENT

Best results will be obtained when adjusting A8 if the antenna normally used is connected and the unit is as nearly in the cabinet as possible.

ONLY THOSE PERSONS PROPERLY LICENSED ARE PERMITTED TO MAKE REPAIRS OR ADJUSTMENTS WHICH MAY RESULT IN ILLEGAL OPERATION. (REFER TO FCC RULES & REGULATIONS PART 19, SUBPART D, SECTION 19.71)

	SPECIAL INSTRUCTIONS	INDICATOR	ADJUST	REMARKS
1.	Connect dummy load or antenna.	Remove jumper wire and connect DC milliammeter between test points. (Refer to capacitor ident. photo.)	A6	Key transmitter. Adjust for a reading of 10ma.
2.	"	"	A7	Key transmitter. Adjust for MINIMUM indication on milliammeter. Remove meter leads and reconnect jumper.
3.	"	RF wattmeter or field strength meter	A8	Key transmitter. Adjust for maximum output.

PARTS LIST AND DESCRIPTION

TRANSISTORS

ITEM No.	ORIG. TYPE	USE	REPLACEMENT DATA			NOTES
			DELCO PART No.	GENERAL ELECTRIC PART No.	RCA PART No.	
X1	S065A	Receive Mixer	DS-25	GE-1		PNP
X2	S065A	Receive Oscillator	DS-25	GE-1		PNP
X3	2N1108	1st IF Amplifier	DS-25	GE-1		PNP
X4	R506	2nd IF Amp.-AF Amp.	DS-25	GE-1		PNP
X5	94017#	Driver-Speech Amp.	DS-26	GE-2	2N406	PNP
X6	94017#	Output-Modulator	DS-26	GE-2	2N408	PNP
X7	94017#	Output-Modulator	DS-26	GE-2	2N408	PNP
X8	R425	Transmit Oscillator	DS-25	GE-1		PNP
X9	R424-1	Final Amplifier	DS-25	GE-1		PNP

Eico Part Number.

POWER RECTIFIERS & SIGNAL DIODES

ITEM No.	CURRENT RATING (Measured)	ORIGINAL Part or Type No.	RECTIFIERS		DIODES	NOTES
			RCA PART No.	SARKES TARZIAN PART No.		
X10		95002				Detector (1N295)
X11	.020A	93005	1N3194	2F4		

ELECTROLYTIC CAPACITORS

ITEM No.	RATING		REPLACEMENT DATA						
	CAP.	VOLT.	EICO PART No.	AEROVOX PART No.	CORNELL-DUBILIER PART No.	GENERAL ELECTRIC PART No.	MALLORY PART No.	PYRAMID PART No.	SPRAGUE PART No.
C1	10	12	23500	BCD12010	ECPB408	MT1-5	TT12X10	MLV10-12	VL-1127
C2	100	6	23501	BCD6100	ECPB117	MT1-18		MLV100-6	
C3	10	12	23500	BCD12010	ECPB408	MT1-5	TT12X10	MLV10-12	VL-1127
C4	10	12	23500	BCD12010	ECPB408	MT1-5	TT12X10	MLV10-12	VL-1127
C5	100	6	23501	BCD6100	ECPB117	MT1-18		MLV100-6	
C6	10	12	23500	BCD12010	ECPB408	MT1-5	TT12X10	MLV10-12	VL-1127
C7	100	12	23502	BCD12100					

FIXED CAPACITORS

ITEM No.	RATING	REMARKS	REPLACEMENT DATA					
			AEROVOX PART No.	CENTRALAB PART No.	CORNELL-DUBILIER PART No.	ELMENCO PART No.	MALLORY PART No.	SPRAGUE PART No.
C8	.01		TTD-01	CK-103	H05S1		TA-110	TG-S10
C9	.01		TTD-01	CK-103	H05S1		TA-110	TG-S10
C10	33 5%		ADM-15-330	TCZ-33	C10Q33C	CM-15-330J		1FM-433
C11	.1		TTD-1	CK-104	H05P1			TG-P10
C12	.05		TTD-05	CK-503	H05S5			TG-S50
C13	.01		TTD-01	CK-103	H05S1		TA-110	TG-S10
C14	.01		TTD-01	CK-103	H05S1		TA-110	TG-S10
C15	.05		TTD-05	CK-503	H05S5			TG-S50
C16	.1		TTD-1	CK-104	H05P1			TG-P10
C17	.01		TTD-01	CK-103	H05S1		TA-110	TG-S10
C18	.1		TTD-1	CK-104	H05P1			TG-P10
C19	.05		TTD-05	CK-503	H05S5			TG-S50
C20	.1		TTD-1	CK-104	H05P1			TG-P10
C21	.1		TTD-1	CK-104	H05P1			TG-P10
C22	2200 10%		DI-2200	DD-222		CCD-222	GP222	10TS-D22
C23	2200 10%		DI-2200	DD-222		CCD-222	GP222	10TS-D22
C24	100 N1500 10%		N750-DI 100	DTN-100	C10T1U	CCTN-101	CN7-310	10TCU-T10
C25	.01		TTD-01	CK-103	H05S1		TA-110	TG-S10
C26	.01		TTD-01	CK-103	H05S1		TA-110	TG-S10
C27	50 5%		ADM-15-500	TCZ-50	C10Q5U	CM-15-500J		1FM-45
C28	330 10%		DI-330	DD-331	L10T33	CCD-331	GP333	10TS-T33
C29	.05		TTD-05	CK-503	H05S5			TG-S50
C30	.1		TTD-1	CK-104	H05P1			TG-P10

CONTROLS

All wattages 1/2 watt, or less, unless otherwise listed.

ITEM No.	USE	RESIST-ANCE	REPLACEMENT DATA				
			EICO PART No.	CENTRALAB PART No.	CLAROSTAT PART No.	CTS-IRC PART No.	MALLORY PART No.
R1	Volume & Switch	5000Ω	16021	B16-214			

COILS (RF-IF)

ITEM No.	USE	REPLACEMENT DATA					NOTES
		EICO PART No.	Merit PART No.	Miller PART No.	Stancor PART No.	Workman PART No.	
L1	Ant. Load	36039					
L2	Mixer Base	36038					
L3	Rec. Osc.	36035					
L4	1st IF	34628					
L5	2nd IF	34629	BC-575				
L6	3rd IF	34630	BC-576				
L7	Transmit Osc.	36036					
L8	Final	36037					
L9	RF Choke	35067					
L10	RF Choke	35067					
L11	RF Choke	35067					

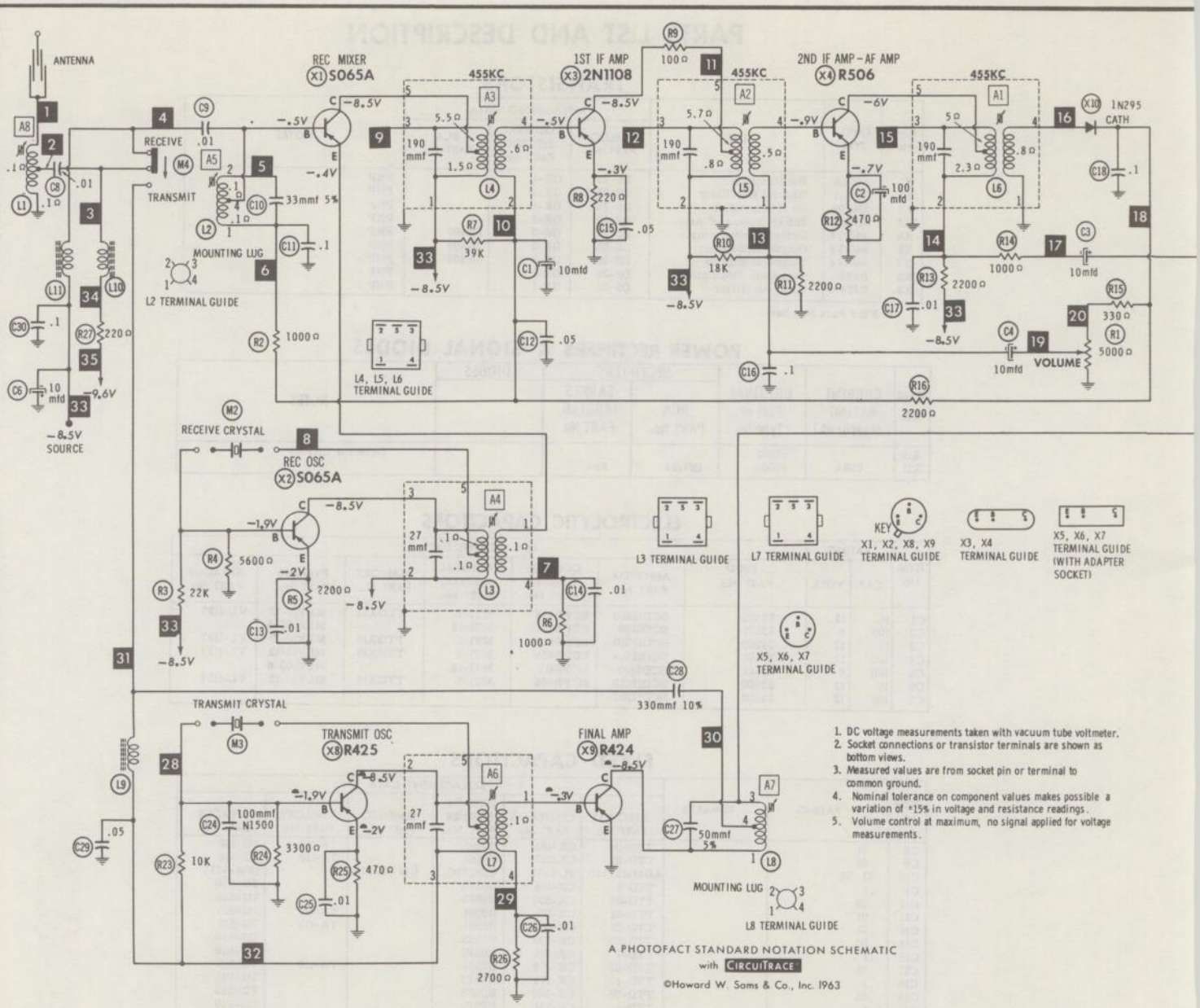

1. DC voltage measurements taken with vacuum tube voltmeter.
2. Socket connections or transistor terminals are shown as bottom views.
3. Measured values are from socket pin or terminal to common ground.
4. Nominal tolerance on component values makes possible a variation of ±15% in voltage and resistance readings.
5. Volume control at maximum, no signal applied for voltage measurements.

A PHOTOFACT STANDARD NOTATION SCHEMATIC
with CIRCUITRACE

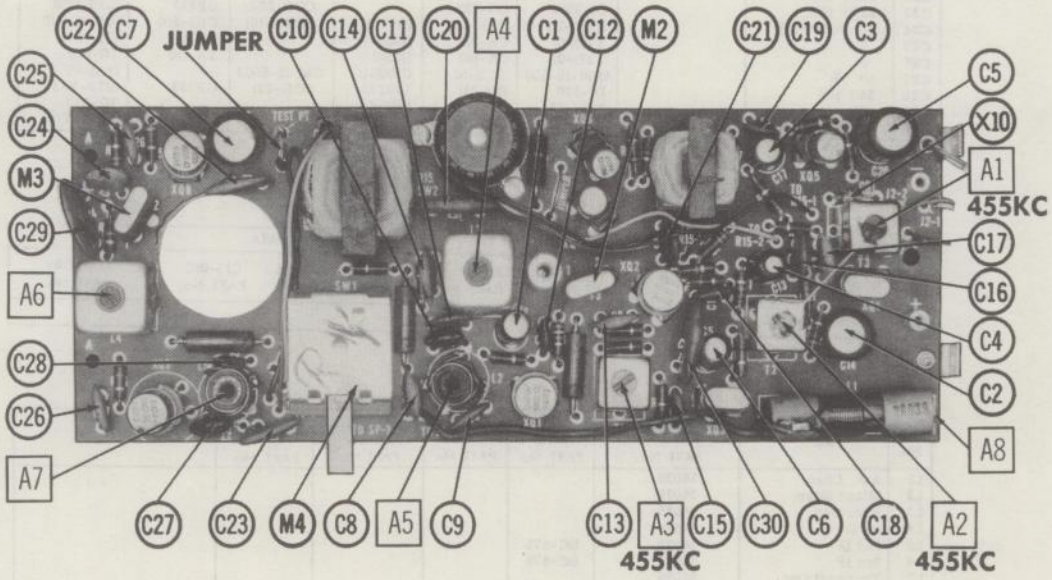

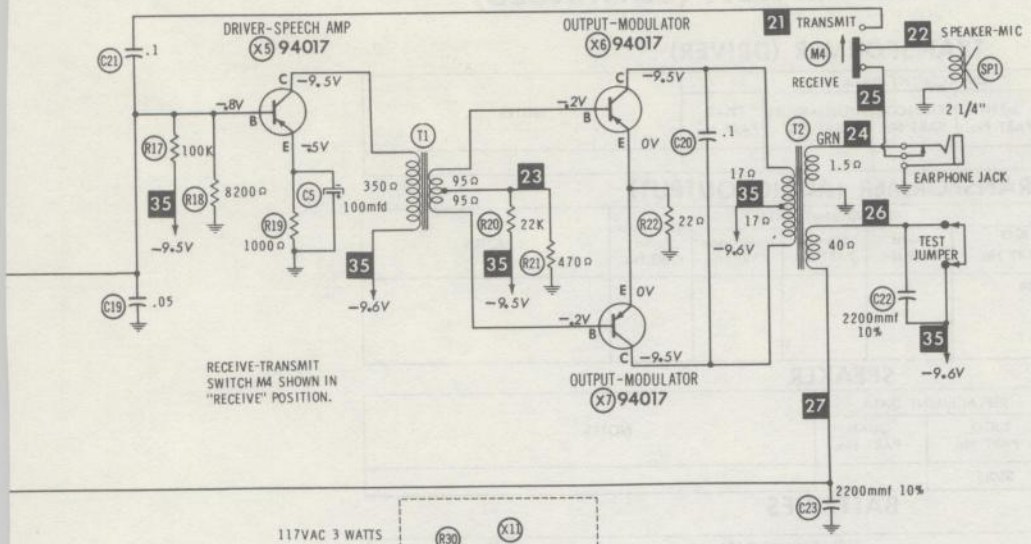

RESISTANCE READINGS

ITEM	TYPE	BASE	EMITTER	COLLECTOR
X1	S065A	7500Ω	1000Ω	†220Ω
X2	S065A	†22K 5600Ω	2200Ω	†220Ω
X3	2N1108	†39K 7500Ω	220Ω	†320Ω
X4	R506	†18K 2200Ω	470Ω	†2400Ω
X5	94017	†100K 8200Ω	1000Ω	†350Ω
X6	94017	†22K 560Ω	22Ω	†17Ω
X7	94017	†22K 560Ω	22Ω	†17Ω
X8	R425	▬†10K 3300Ω	470Ω	▬†220Ω
X9	R424-1	2700Ω	0Ω	†40Ω

ALL READINGS TAKEN IN "RECEIVE" POSITION UNLESS OTHERWISE DESIGNATED.
▬ TAKEN IN "TRANSMIT" POSITION.
† MEASURED FROM CIRCUITRACE #35.

EICO MODEL 740

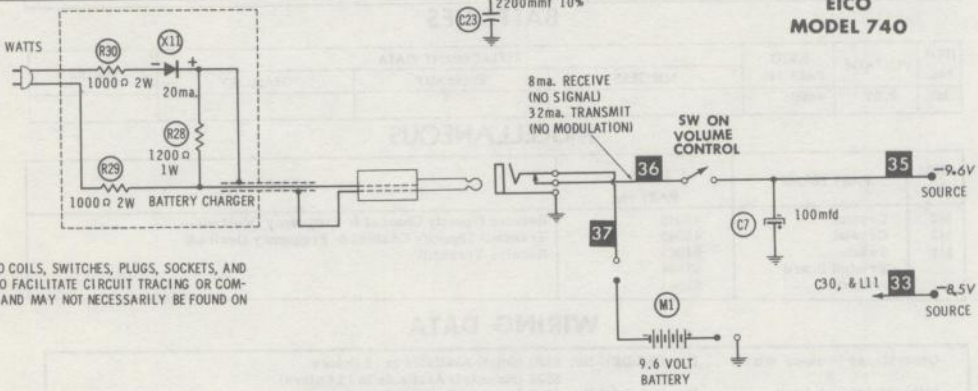

NUMBERS ASSIGNED TO COILS, SWITCHES, PLUGS, SOCKETS, AND TRANSFORMERS ARE TO FACILITATE CIRCUIT TRACING OR COMPONENT REPLACEMENT AND MAY NOT NECESSARILY BE FOUND ON THE UNIT.

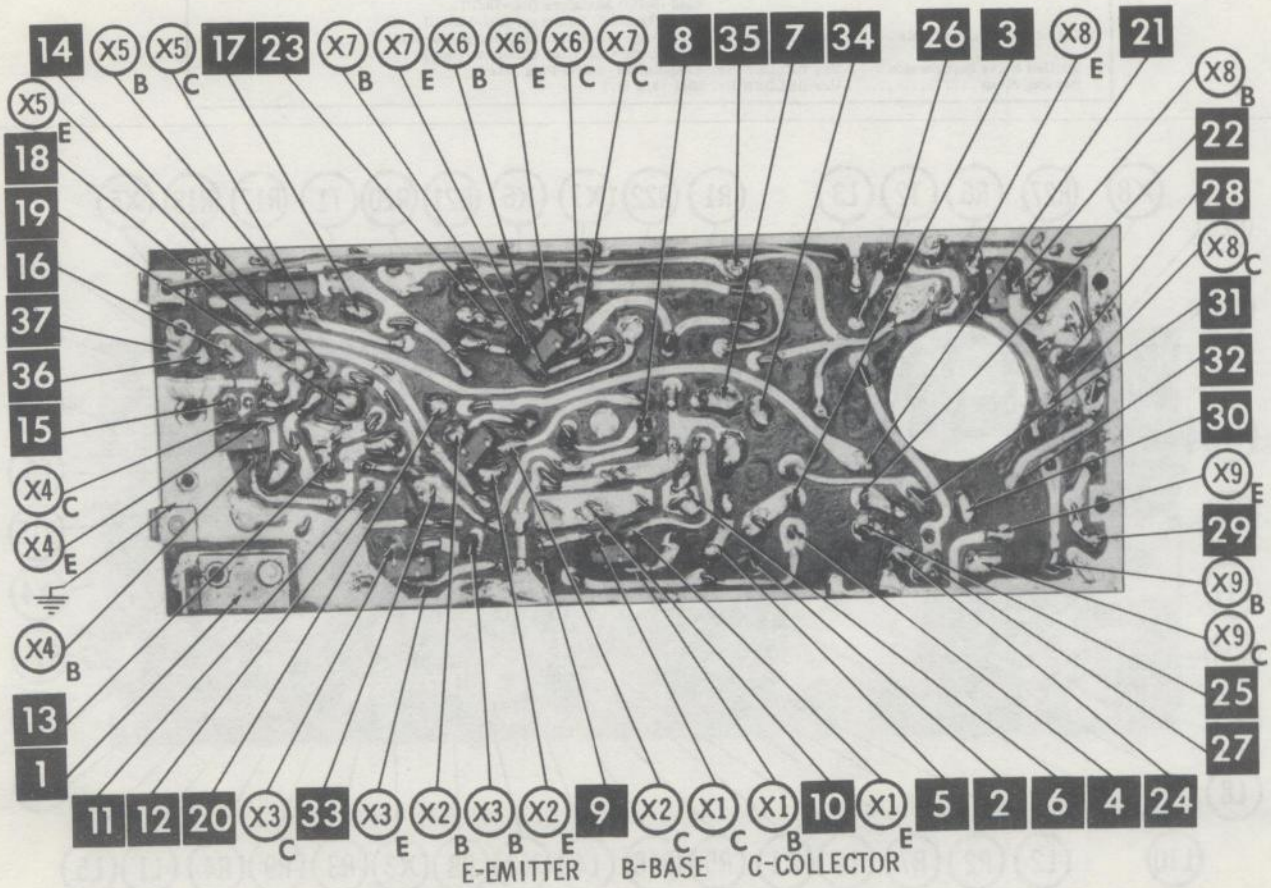

A Howard W. Sams CIRCUITRACE® Photo

EICO MODEL 740

PARTS LIST AND DESCRIPTION (CONTINUED)

TRANSFORMER (DRIVER)

ITEM No.	TURNS RATIO		REPLACEMENT DATA					NOTES
	PRI.	SEC.	EICO PART No.	MERIT PART No.	STANCOR PART No.	THORDARSON PART No.	TRIAD PART No.	
T1	1.8	1	32027					

TRANSFORMER (AUDIO OUTPUT)

ITEM No.	IMPEDANCE		REPLACEMENT DATA					NOTES
	PRI.	SEC. 1	EICO PART No.	Merit PART No.	Stancor PART No.	Thordarson PART No.	Triad PART No.	
T2	500Ω	6-8Ω	32028					
		SEC. 2						
		500Ω						

SPEAKER

ITEM No.	TYPE			REPLACEMENT DATA		NOTES
	SIZE	FIELD	V. C. IMP.	EICO PART No.	QUAM PART No.	
SP1	2 1/4"	PM	6-8Ω	55015		

BATTERIES

ITEM No.	VOLTAGE	EICO PART No.	REPLACEMENT DATA			NOTES
			BURGESS	EVEREADY	MALLORY	
M1	9.6V	56005				

MISCELLANEOUS

ITEM No.	PART NAME	EICO PART No.	NOTES
M2	Crystal	49046	Receive (Specify Channel & Frequency Desired)
M3	Crystal	49045	Transmit (Specify Channel & Frequency Desired)
M4	Switch	64003	Receive-Transmit
	Printed Board	82504	
	Antenna	99003	

WIRING DATA

General-use Hook-up Wire .... Use BELDEN No. 8530 (Solid) Available in 12 Colors
8524 (Stranded) Available in 12 Colors)
Shielded Antenna Lead ..... Use BELDEN No. 8214 Lowest Loss (RG-8/U Type)
8237 Low Loss (RG-8/U)
8240 (Solid) Miniature (RG-58/U)
8259 (Stranded) Miniature (RG-58A/U)
Coiled Microphone Cable ..... Use BELDEN No. 8499 Single Conductor Shielded (Neoprene)
8498 Single Conductor Shielded (Vinyl)
Ignition Noise Suppression .... Use BELDEN No. 7300-Series Spark-Plug Sets
Bonding Strap ..... Use BELDEN No. 8661 (3/8 In.)

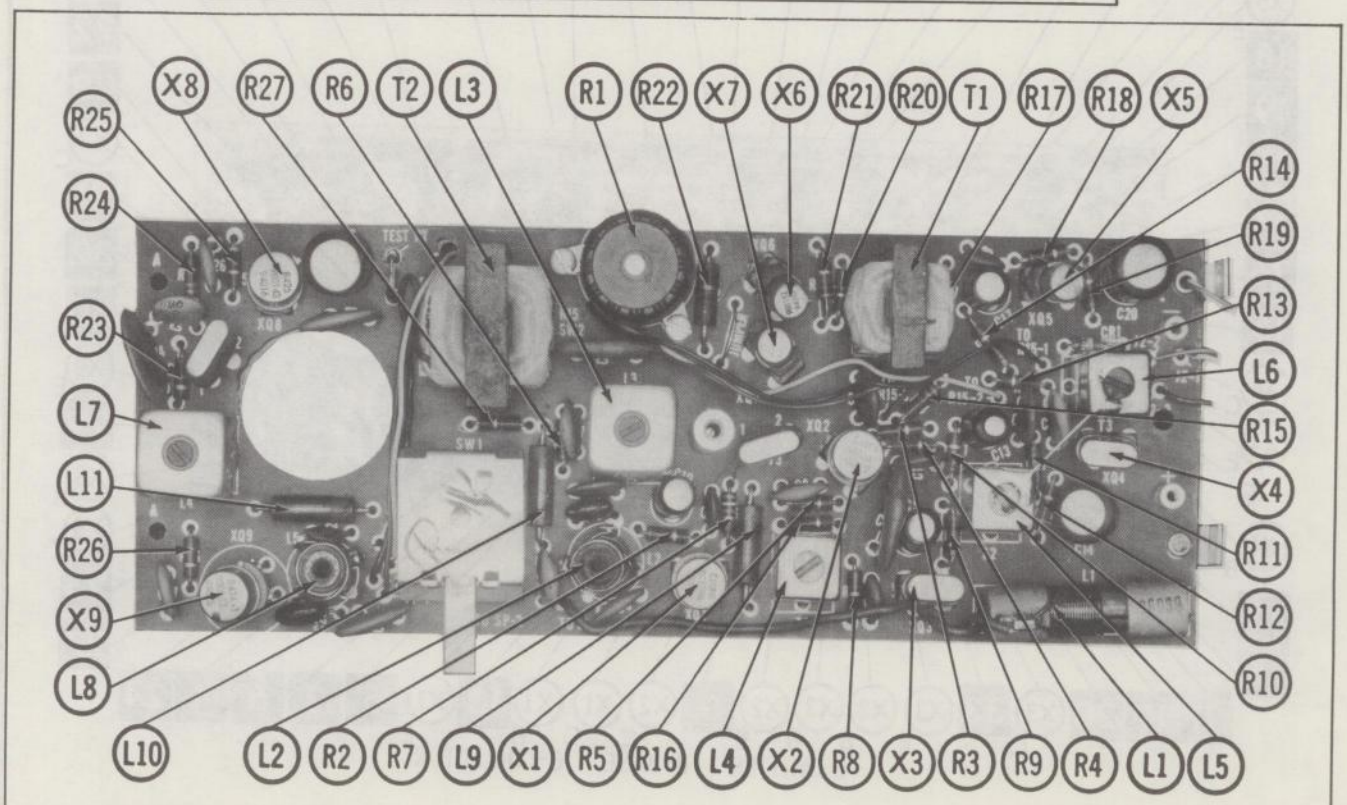

PRINTED BOARD-RESISTOR, INDUCTOR & TRANSISTOR IDENT.

TRADE NAME: Eico Models 771W, 772W

SUPPLIER: Electronic Instrument Co., Inc.
33-00 Northern Blvd., L. I. City 1, N. Y.

TYPE SET: 8 Tube Transceiver

POWER SUPPLY: 110 – 120 Volts AC, 60 Cycles (or)
6 (or) 12 Volt Storage Battery

RATING: 50 Watts, .46 Amp. @ 117VAC
4.3 Amp. @12.6VDC
8.1 Amp. @ 6.3VDC

TUNING RANGE: TRANSMITTER: Any 4 CB Channels 1 thru 23
RECEIVER: 1 Crystal Controlled Channel
(or)continuously tuned.

ALIGNMENT INSTRUCTIONS

PREALIGNMENT

Suggested Alignment Tools:
A1 thru A11..... GENERAL CEMENT #8282, 8606, 8606-L.....WALSCO #2526, 2543, 2544
A12, A13..... GENERAL CEMENT #5000, 5003, 5066..... WALSCO #2515, 2516, 2518

RECEIVER ALIGNMENT

SIGNAL GENERATOR	CHANNEL	ADJUST	REMARKS
High side thru .001mfd to pin 2 (grid) of Mixer (V2), common to ground. (Tune to 1750KC).	Any	A1, A2, A3, A4, A5, A6	Connect VTVM between point (A) and ground; adjust for maximum deflection.
High side to antenna terminal, common to chassis. Tune to channel frequency.	11 (27.085MC)	A7, A8, A9	"
"		A10	Rotate Channel Selector switch to position "A" (Crystal controlled). Insert crystal in receive crystal socket. Connect DC VTVM between pin 9 of V3 and ground. Adjust A10 for maximum deflection. Rock A10 each side of the peak, note rate of dropoff. Set A10 at point just below the peak on the side of gradual dropoff.

TRANSMITTER ALIGNMENT

Only those persons properly licensed are permitted to make repairs or adjustments which may result in illegal operation. ((Refer to FCC rules and regulations Part 19, Subpart D, Section 19.71).

The frequency of the transmitter should be checked periodically with a secondary frequency standard to insure proper and legal operation.

Best results will be obtained when adjusting the final RF output circuit if the antenna normally used is connected and the chassis is as nearly in the cabinet as possible.

	CHANNEL	ADJUST	REMARKS
Connect dummy load and RF Wattmeter to antenna terminals. Connect DC VTVM between pin 2, V8 and ground.	Center Channel Used.	A11	Key transmitter. Adjust for maximum. Rock A11 to each side of peak, note rate of dropoff. Set A11 just below peak on side of gradual dropoff.
Connect dummy load and RF Wattmeter to antenna terminal. Connect a 0-100 DC milliammeter to meter jack on rear of chassis.		A12, A13	Key transmitter. Adjust A12 for MINIMUM meter indication (20-25ma). Adjust A13 for 27ma. Repeat adjustment several times.

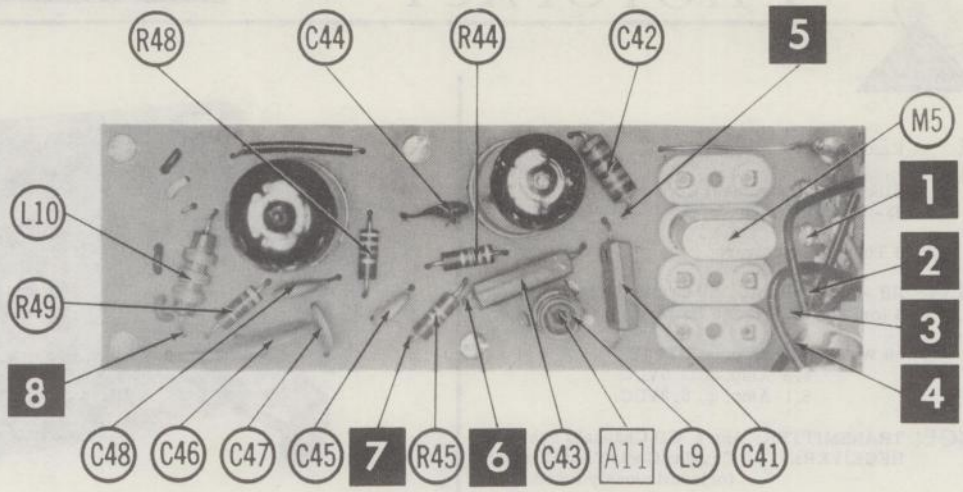

A Howard W. Sams CIRCUITRACE® Photo

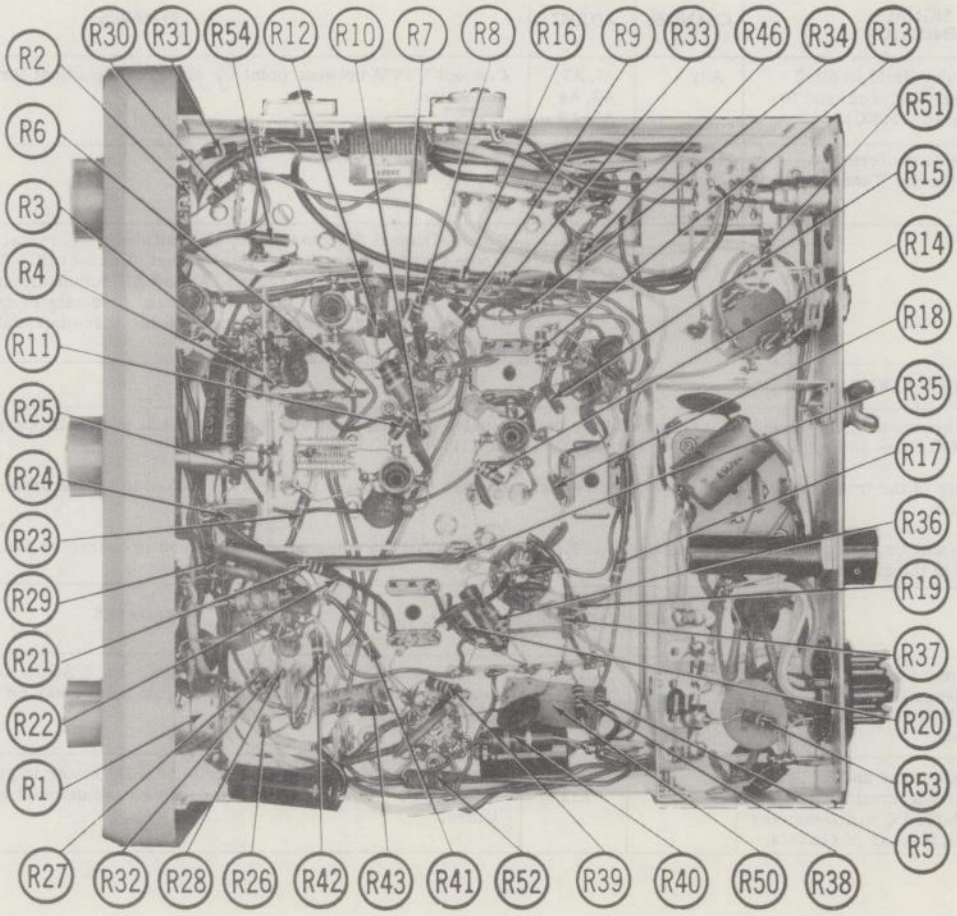

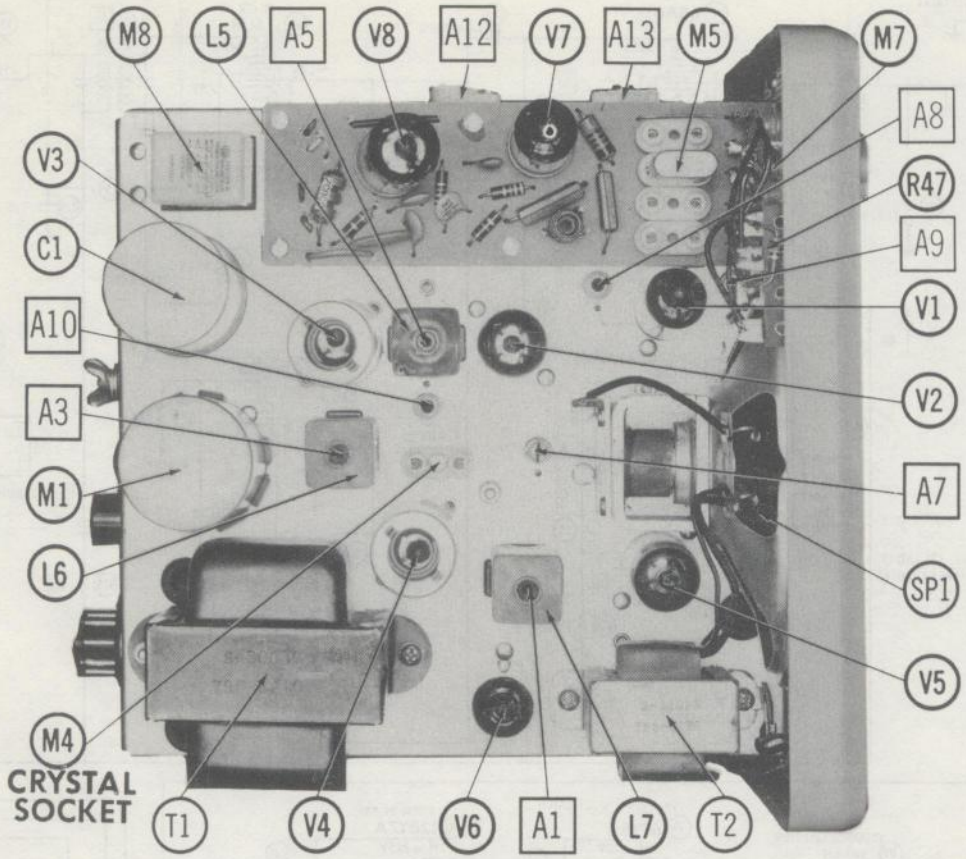
M8
L5
A5
V8
A12
V7
A13
M5
M7
A8
R47
A9
V1
V2
A7
SP1
V5
V3
C1
A10
A3
M1
L6
M4
CRYSTAL SOCKET
T1
V4
V6
A1
L7
T2

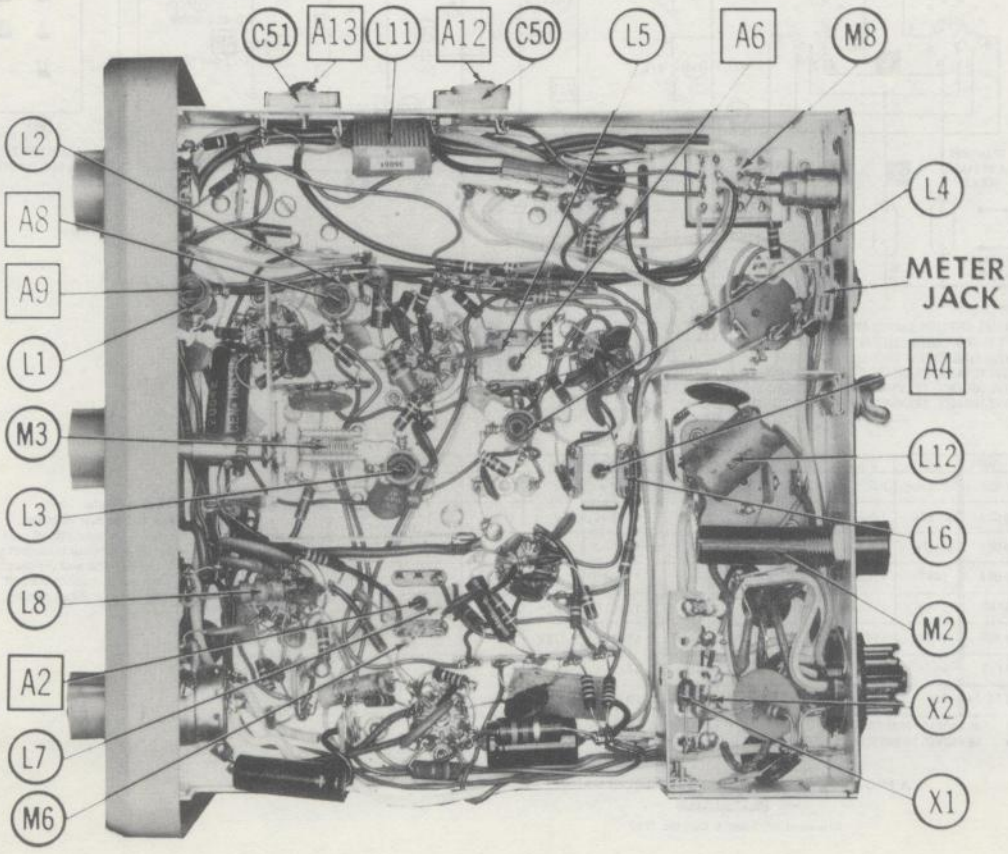
C51
A13
L11
A12
C50
L5
A6
M8
L2
A8
A9
L1
M3
L3
L8
A2
L7
M6
L4
METER JACK
A4
L12
L6
M2
X2
X1

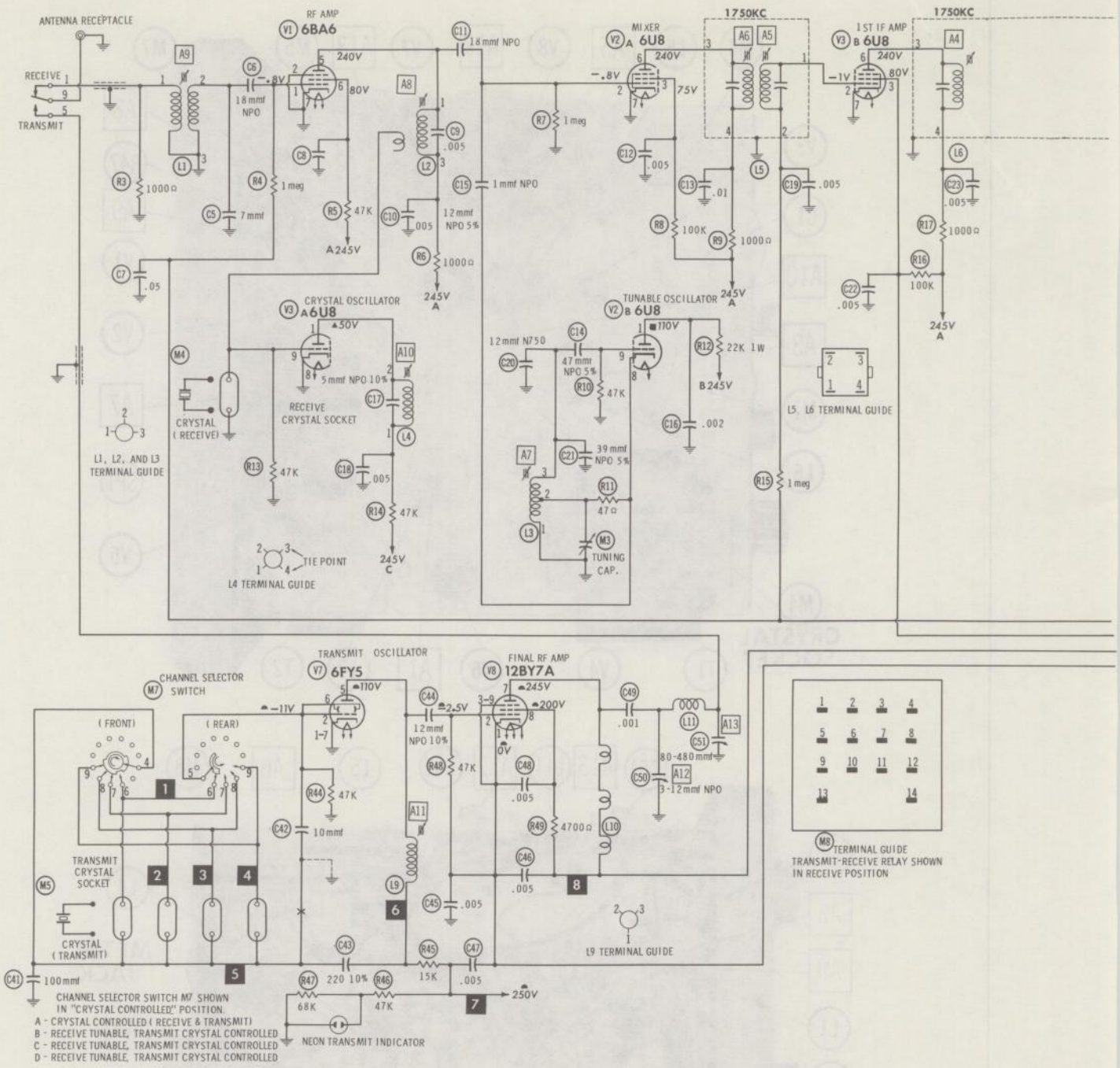

RESISTANCE READINGS

ITEM	TUBE	Pin 1	Pin 2	Pin 3	Pin 4	Pin 5	Pin 6	Pin 7	Pin 8	Pin 9
V1	6BA6	2.5meg	0Ω	FIL	FIL	†1500Ω	†47K	0Ω		
V2	6U8A	■ †22K	1meg	†100K	FIL	FIL	†1500Ω	0Ω	47Ω	47K
V3	6U8A	▲ †47K	2.5meg	†100K	FIL	FIL	†1500Ω	0Ω	0Ω	47K
V4	6U8A	†490K	2.5meg	†100K	FIL	FIL	†1500Ω	0Ω	4700Ω	470K
V5	6FM8	1meg	1.5meg	1.5meg	FIL	FIL	1meg	0Ω	▪ 1meg	†110K
V6	6AQ5	470K	560Ω	FIL	FIL	†900Ω	†500Ω	470K		
V7	6FY5	0Ω	47K	FIL	FIL	▪ †15K	47K	0Ω		
V8	12BY7A	0Ω	▪ 47K	▪ 0Ω	FIL	FIL	FIL	†830Ω	†5500Ω	▪ 0Ω

† MEASURED FROM CATHODE OF X2
■ MEASURED IN SWITCH POSITION B, C, OR D.
▪ MEASURED IN "TRANSMIT" POSITION.
▲ MEASURED IN SWITCH POSITION A, WITHOUT RECEIVE CRYSTAL

⊖ See parts list for alternate value or application.
1. Voltage measurements taken with vacuum tube voltmeter.
2. All controls set for normal operation, no signal applied.
3. Measured values are from socket pin or terminal to common ground.
4. All terminals viewed from bottom unless otherwise designated.
5. Numbers assigned to terminals may not be found on the unit.
6. Supply voltage maintained at rated value for voltage readings.

A PHOTOFACT STANDARD NOTATION SCHEMATIC
with CIRCUITRACE

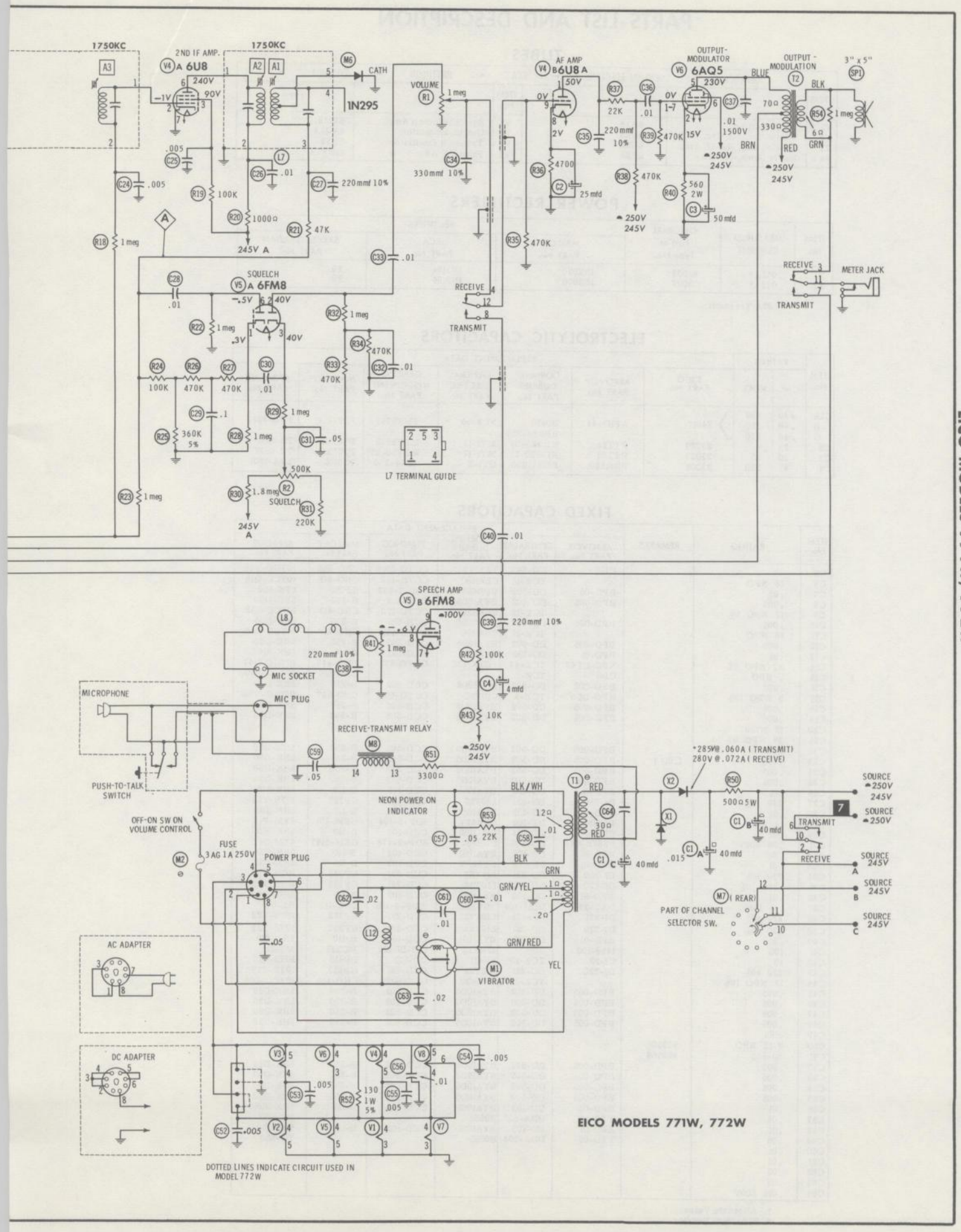

EICO MODELS 771W, 772W

PARTS LIST AND DESCRIPTION

TUBES

ITEM No.	USE	TYPE	ITEM No.	USE	TYPE
V1	RF Amplifier	6BA6	V5	Squelch-Speech Amp.	6FM8
V2	Mixer-Tunable Osc.	6U8A	V6	Output-Modulator	6AQ5A
V3	Crystal Osc.-1st IF Amp.	6U8A	V7	Transmit Oscillator	6FY5
V4	2nd IF Amp.-AF Amp.	6U8A	V8	Final RF Amp.	12BY7A

POWER RECTIFIERS

ITEM No.	MEASURED CURRENT	ORIGINAL Part or Type No.	RECTIFIERS		
			MALLORY PART No.	RCA PART No.	SARKES TARZIAN PART No.
X1	.072A*	93007	1N2070	1N3194	F6
X2	.072A*	93007	1N2070	1N3194	F6

* .06A Transmit

ELECTROLYTIC CAPACITORS

ITEM No.	RATING		REPLACEMENT DATA						
	CAP.	VOLT.	EICO PART No.	AEROVOX PART No.	CORNELL-DUBILIER PART No.	GENERAL ELECTRIC PART No.	GENERAL INSTRUMENT PART No.	MALLORY PART No.	SPRAGUE PART No.
C1A	■40	350	24017	AFH3-44	B0450	XC3-40	TMT3748	FP377.1	TVL-3787
B	▲40	350			BBR40-250				
C	▲40	250							
C2	25	6	23020	PTT26	NLW25-10	MT1-13	MLV25-6	TT6X25	TE-1091
C3	50	25	23007	PTT85	NLW50-25	MT1-17	MLV50-25	TT25X50	TE-1209
C4	4	250	23008	PRS1550	BBR4-250	QT1-2	TD-4-250	TC50X	TVA-1501

FIXED CAPACITORS

ITEM No.	RATING	REMARKS	REPLACEMENT DATA					
			AEROVOX PART No.	CENTRALAB PART No.	CORNELL-DUBILIER PART No.	ELMENCO PART No.	MALLORY PART No.	SPRAGUE PART No.
C5	7		CI-7	DD-6R8	L10V7	CCTO-6R8	CNO-568	10TCC-V68
C6	18 NPO			TCZ-18	C10Q18C	CCTO-180	CNO-418	10TCC-Q18
C7	.05		BPD-05	DD-503	CUB6S5	6DP-3-503	GP150	6PS-S50
C8	.005		BPD-005	DD-502	BYA10D5	CCD-502	B-250	5HK-D50
C9	12 NPO 5%			TCZ-12	C10Q12C	CCTO-120	CNO-412	10TCC-Q12
C10	.005		BPD-005	DD-502	BYA10D5	CCD-502	B-250	5HK-D50
C11	18 NPO			TCZ-18	C10Q18C	CCTO-180	CNO-418	10TCC-Q18
C12	.005		BPD-005	DD-502	BYA10D5	CCD-502	B-250	5HK-D50
C13	.01		BPD-01	DD-103	BYA10S1	CCD-103	B-110	5HK-S10
C14	47 NPO 5%		NPO-DI 47	TCZ-47	C10Q47C	CCTO-470	CNO-447	10TCC-Q47
C15	1 NPO		CI-1	TCZ-1			CNO-510	10TCC-V10
C16	.002		BPD-002	DD-202	BYA10D2	CCD-202	B-220	5HK-D20
C17	5 NPO 10%		NPO-DI 5	TCZ-5	C10V5C	CCTO-050	CNO-547	10TCC-V50
C18	.005		BPD-005	DD-502	BYA10D5	CCD-502	B-250	5HK-D50
C19	.005		BPD-005	DD-502	BYA10D5	CCD-502	B-250	5HK-D50
C20	12 N750							
C21	39 NPO 5%							
C22	.005		BPD-005	DD-502	BYA10D5	CCD-502	B-250	5HK-D50
C23	.005	(.01) †	BPD-005	DD-502	BYA10D5	CCD-502	B-250	5HK-D50
C24	.005		BPD-005	DD-502	BYA10D5	CCD-502	B-250	5HK-D50
C25	.005		BPD-005	DD-502	BYA10D5	CCD-502	B-250	5HK-D50
C26	.01		BPD-01	DD-103	BYA10S1	CCD-103	B-110	5HK-S10
C27	220 10%		DI-220	DD-221	L10T22	CCD-221	GP322	10TS-T22
C28	.01		BPD-01	DD-103	BYA10S1	CCD-103	B-110	5HK-S10
C29	.1 100V		P488N-1	DF-104	CUB4P1	4DP-3-104	GEM-401	4TM-P10
C30	.01		BPD-01	DD-103	BYA10S1	CCD-103	B-110	5HK-S10
C31	.05 400V		P688N-047	DD-503	CUB6S47	6DP-3-473	GEM-6147	6TM-S47
C32	.01		BPD-01	DD-103	BYA10S1	CCD-103	B-110	5HK-S10
C33	.01		BPD-01	DD-103	BYA10S1	CCD-103	B-110	5HK-S10
C34	330 10%		DI-330	DD-331	L10T33	CCD-331	GP333	10TS-T33
C35	220 10%		DI-220	DD-221	L10T22	CCD-221	GP322	10TS-T22
C36	.01		BPD-01	DD-103	BYA10S1	CCD-103	B-110	5HK-S10
C37	.01 1500V		DAC-27	DD16-103	HVE16S1	16DP-3-103	UAC-110	BL-S10
C38	220 10%		DI-220	DD-221	L10T22	CCD-221	GP322	10TS-T22
C39	220 10%		DI-220	DD-221	L10T22	CCD-221	GP322	10TS-T22
C40	.01		BPD-01	DD-103	BYA10S1	CCD-103	B-110	5HK-S10
C41	100		1459-100		22R5T1	CM-19-100	MC235	MS-31
C42	10		CI-10	TCZ-10	L10Q1	DD-100	GP410	10TS-Q10
C43	220 10%		DI-220	DD-221	L10T22	CCD-221	GP322	10TS-T22
C44	12 NPO 10%			TCZ-12	C10Q12C	CCTO-120	CNO-412	10TCC-Q15
C45	.005		BPD-005	DD-502	BYA10D5	CCD-502	B-250	5HK-D50
C46	.005		BPD-005	DD-502	BYA10D5	CCD-502	B-250	5HK-D50
C47	.005		BPD-005	DD-502	BYA10D5	CCD-502	B-250	5HK-D50
C48	.005		BPD-005	DD-502	BYA10D5	CCD-502	B-250	5HK-D50
C49	.001							
C50	3-12 NPO	#29500						
C51	80-480	#29509						
C52	.005		BPD-005	DD-502	BYA10D5	CCD-502	B-250	5HK-D50
C53	.005		BPD-005	DD-502	BYA10D5	CCD-502	B-250	5HK-D50
C54	.005		BPD-005	DD-502	BYA10D5	CCD-502	B-250	5HK-D50
C55	.005		BPD-005	DD-502	BYA10D5	CCD-502	B-250	5HK-D50
C56	.01		BPD-01	DD-103	BYA10S1	CCD-103	B-110	5HK-S10
C57	.05		TTD-05	DDA-503	H05S5			TG-S50
C58	.01		BPD-01	DD-103	BYA10S1	CCD-103	B-110	5HK-S10
C59	.05		TTD-05	DDA-503	H05S5			TG-S50
C60	.01							
C61	.01							
C62	.02							
C63	.02							
C64	.015 600V							

† Alternate Value.
# Eico Part Number.

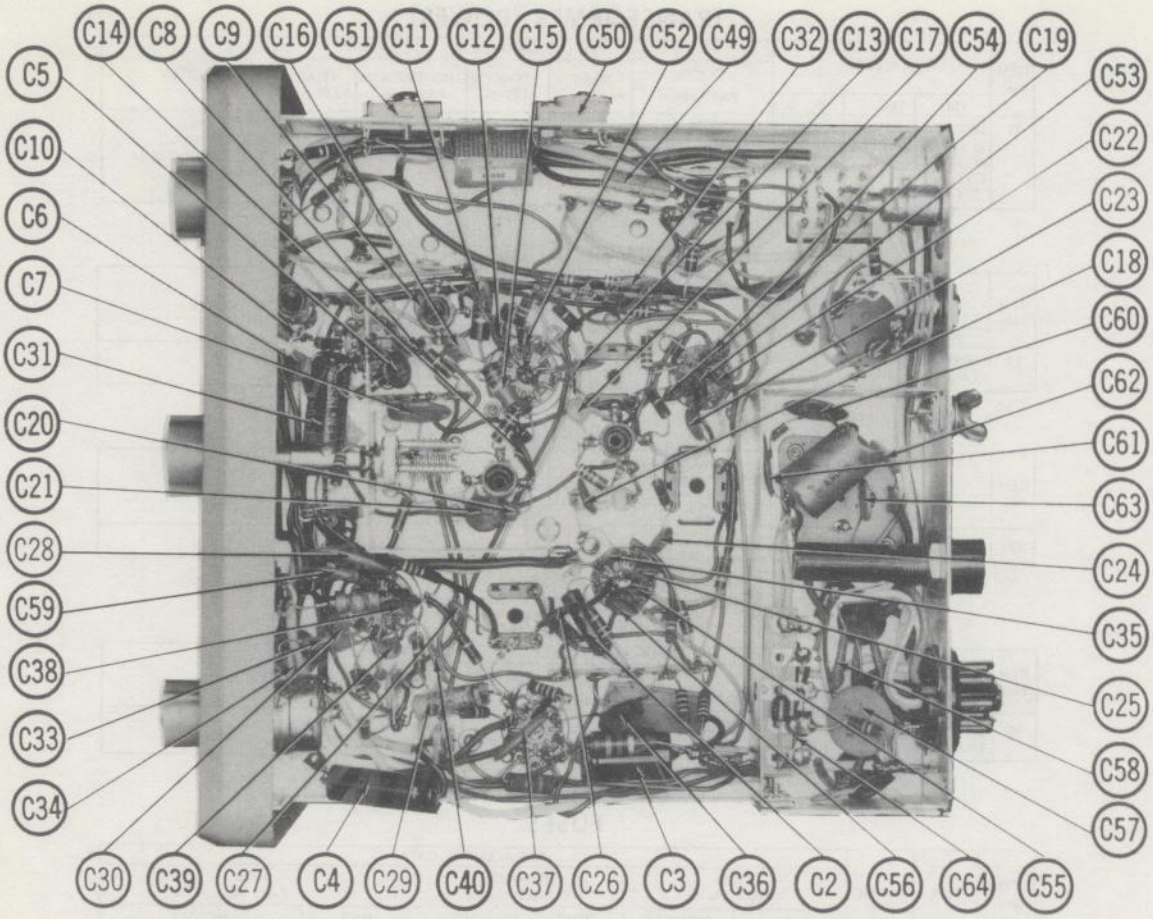

PARTS LIST AND DESCRIPTION (CONTINUED)

CONTROLS

All wattages 1/2 watt, or less, unless otherwise listed.

ITEM No.	USE	RESIST-ANCE	REPLACEMENT DATA				
			EICO PART No.	CENTRALAB PART No.	CLAROSTAT PART No.	CTS–IRC PART No.	MALLORY PART No.
R1	Volume & Switch	1meg	18059	B-70-S or (F1-500K, SU204)	A47-1meg-Z, SWE-12, KSS-3	Q13-137, 76-1 or (BU2, CF-26, SS-1, GC)*	U53, US-26, or (UA16A, US-41, SK-1000)
R2	Squelch	500K	18076	B-59 or (F2-1meg, KR-1, SU204)	A47-500K-S, KSS-3	Q11-133 or (BU2, CF16, SS1, DC1)*	U50 or (UA55L, SK-1000)

* "SNAPTROL"

RESISTORS (Power and Special)

ITEM No.	RATING	REPLACEMENT DATA				ITEM No.	RATING	REPLACEMENT DATA		
		IRC PART No.	WORKMAN PART No.	REMARKS				IRC PART No.	WORKMAN PART No.	REMARKS
R50	500Ω 5W	PW5-500	5W-SQ-500							

COILS (RF-IF)

ITEM No.	USE	REPLACEMENT DATA					NOTES
		EICO PART No.	MERIT PART No.	MILLER PART No.	STANCOR PART No.	WORKMAN PART No.	
L1	Rec. Ant.	36024					
L2	Mixer (2.4uh)	36025					
L3	Osc., Tunable (1.6uh)	36026					
L4	Osc., Crystal (6.5uh)	36027		4204			
L5	1st IF	34615					
L6	2nd IF	34616					
L7	3rd IF	34617					
L8	RF Choke (100uh)	35052		6112			
L9	Transmit Osc. (3.5uh)	36023					
L10	RF Choke (100uh)	35052		6112			
L11	Final Tank (1.9uh)	35051					
L12	Hash Filter	35053					

PARTS LIST AND DESCRIPTION (CONTINUED)

TRANSFORMER (POWER)

ITEM No.	RATING			REPLACEMENT DATA					NOTES
	PRI.	SEC. 1	SEC. 2	EICO PART No.	MERIT PART No.	STANCOR PART No.	THORDARSON PART No.	TRIAD PART No.	
T1	117VAC @ .47A or 12.6V CT @ 2.4A	115VAC @ .072A DC	6.3VAC* @ 1.8A AC	30036 ① 30037 ②					① 771W only. ② 772W only. * 12.6V Winding on Model 772W

TRANSFORMER (AUDIO OUTPUT)

ITEM No.	IMPEDANCE		REPLACEMENT DATA					NOTES
	PRI.	SEC.	EICO PART No.	MERIT PART No.	STANCOR PART No.	THORDARSON PART No.	TRIAD PART No.	
T2	7500Ω Tap @ 6000Ω	3-4Ω	32023					

SPEAKER

ITEM No.	TYPE	REPLACEMENT DATA		NOTES
		EICO PART No.	QUAM PART No.	
SP1	3" x 5" PM 3-4Ω	55014	35A05	

VIBRATOR

ITEM No.	TYPE	INPUT VOLTS	FRE-QUENCY	REPLACEMENT DATA			NOTES
				EICO PART No.	CORNELL-DUBILIER PART No.	MALLORY PART No.	
M1	Interrupter	6.3	115~	39500	5301	1601	Model 771W
	Interrupter	12.6	115~	39501	6301	G1601	Model 772W

FUSES

ITEM No.	TYPE	RATING	REPLACEMENT DATA					
			EICO PART No.		LITTELFUSE PART No.		BUSS PART No.	
			FUSE	HOLDER	FUSE	HOLDER	FUSE	HOLDER
M2	3AG	1A 250V S/B	91006 ①	97800	313001 (3AG 1A 250V) S/B	342001	MDL-1	HKP
		10A 32V S/B	91010 ②	97800	307010 (3AG 10A 32V)	342001	MDA-6	HKP
		6A 32V S/B	91009 ③	97800	307006 (3AG 6A 32V)	342001	MDA-6	HKP

① 117VAC Versions. ② 6.3VDC Versions. ③ 12.6VDC Versions.

MISCELLANEOUS

ITEM No.	PART NAME	EICO PART No.	NOTES
M3	Tuning Cap.	29016	15mmf
M4	Crystal		Receive, (order frequency desired)
M5	Crystal		Transmit (order frequency desired)
M6	Detector (1N295)	95002	
M7	Switch	60087	Channel Selector (Rotary Wafer Type)
M8	Relay	39002	Receive-Transmit)
	Microphone	57501	
	Neon Indicator	97715	2 Used (Power On-Transmit Indicator)

CABINETS & CABINET PARTS

(When Ordering Specify Model, Chassis & Color)

ITEM	PART No.	ITEM	PART No.
Knob	53034	Cabinet	88079

WIRING DATA

General-use Hook-up Wire .... Use BELDEN No. 8530 (Solid) Available in 12 Colors
8524 (Stranded) Available in 12 Colors
Shielded Antenna Lead ..... Use BELDEN No. 8214 Lowest Loss (RG-8/U Type)
8237 Low Loss (RG-8/U)
8240 (Solid) Miniature (RG-58/U)
8259 (Stranded) Miniature (RG-58A/U)
Coiled Microphone Cable ..... Use BELDEN No. 8497 3 Conductor - 1 Shielded for Press-to-Talk (Neoprene)
8496 3 Conductor - 1 Shielded for Press-to-Talk (Vinyl)
Ignition Noise Suppression .... Use BELDEN No. 7300-Series Spark-Plug Sets
Bonding Strap ..... Use BELDEN No. 8661 (3/8 In.)

TRADE NAME: Fanon Model FCB-9
Masco Model MCB-9

SUPPLIER: Fanon Electronic Sales Corp.,
A Div. of Fanon Electronic Industries, Inc.
439 Frelinghuysen Ave., Newark, N.J.

TYPE SET: 9 Transistor Transceiver

POWER SUPPLY: 9 Volts DC

RATING: 10MA @ 9VDC (Receive, No Signal)
26MA @ 9VDC (Transmit, No Modulation)

TUNING RANGE: Any one CB Channels 1 thru 22

ALIGNMENT INSTRUCTIONS

Suggested Alignment Tools:
A1 thru A7....GENERAL CEMENT #9089, 5066, 8276...WALSCO #2512, 2525, 2528

RECEIVER ALIGNMENT

Connect DC VTVM across volume control.

	SIGNAL GENERATOR	CHANNEL	ADJUST	REMARKS
1.	High side thru .01mfd to emitter of X1, common to ground. Tune to 455KC (Unmod.)		A1, A2, A3	Adjust for maximum deflection.
2.	High side to external rod antenna, common to ground. Tune to channel frequency.	9 27.065MC	A4, A5	Adjust for maximum deflection.

TRANSMITTER ALIGNMENT

ONLY THOSE PERSONS PROPERLY LICENSED ARE PERMITTED TO MAKE REPAIRS OR ADJUSTMENTS WHICH MAY RESULT IN ILLEGAL OPERATION. (REFER TO FCC RULES & REGULATIONS PART 19, SUBPART D, SECTION 19.71)

	SPECIAL INSTRUCTIONS	INDICATOR	ADJUST	REMARKS
1	Supply voltage should be maintained at 9 volts.	RF wattmeter or field strength meter.	A6, A7	Key Transmitter. Adjust for maximum output.

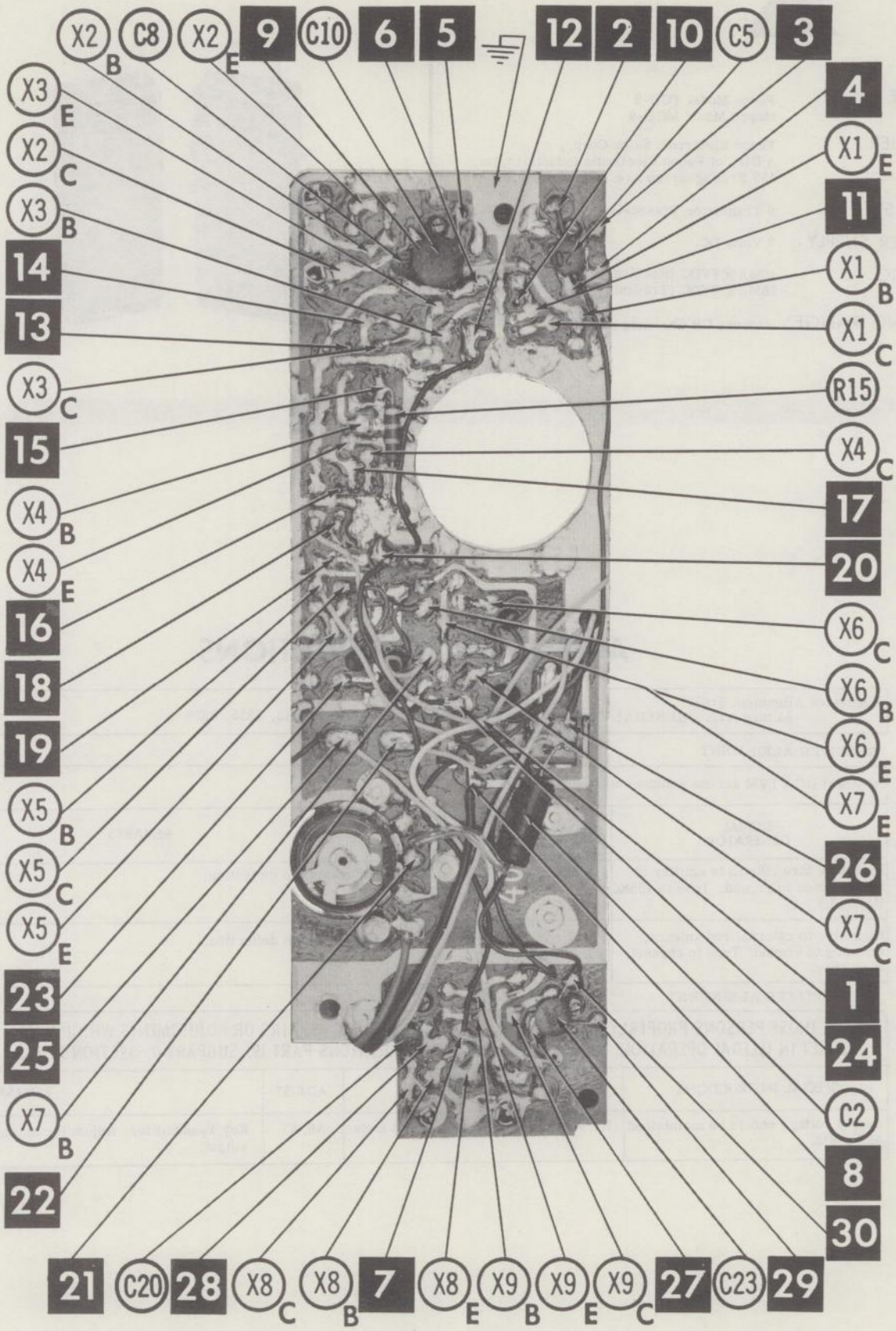

A Howard W. Sams CIRCUITRACE Photo

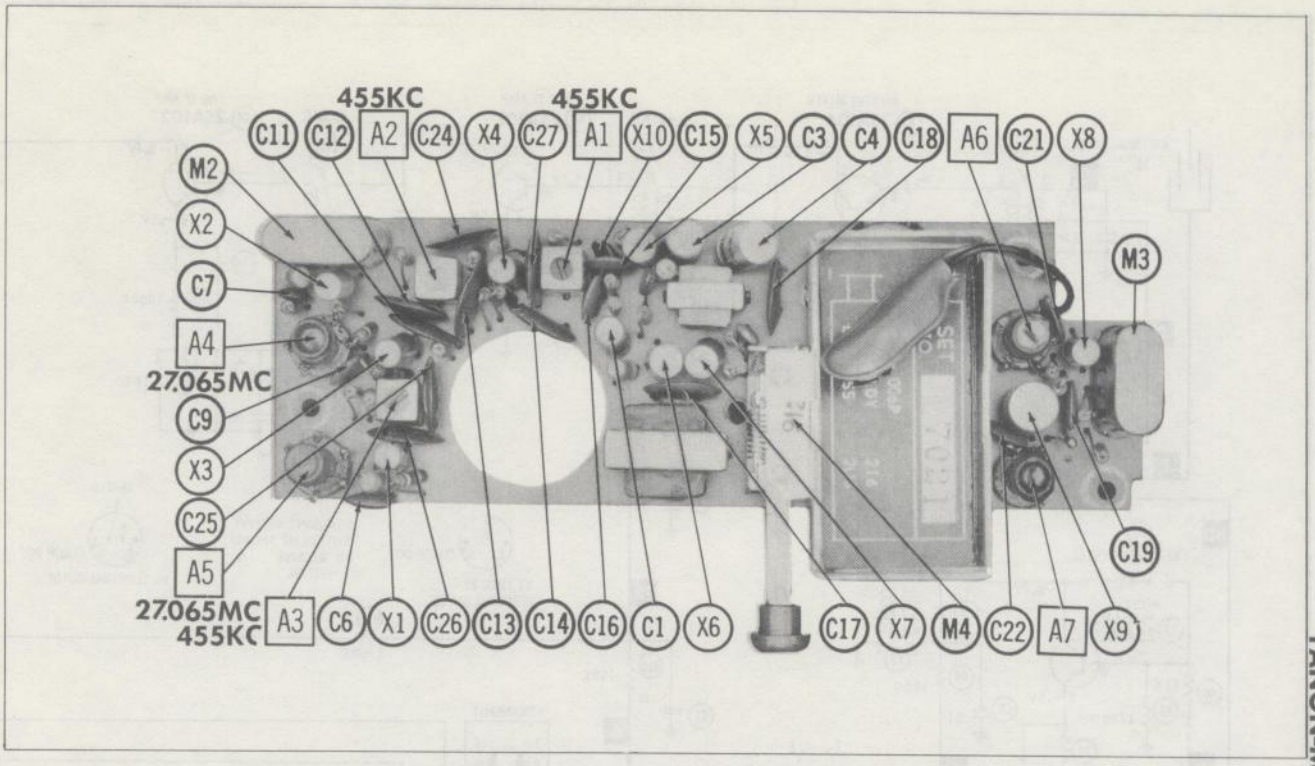

PARTS LIST AND DESCRIPTION

TRANSISTORS

ITEM No.	ORIG. TYPE	USE	REPLACEMENT DATA			NOTES
			DELCO PART No.	GENERAL ELECTRIC PART No.	RCA PART No.	
X1	2SA104	Rec. Mixer	DS34	GE-1		PNP
X2	2SA103	Rec. Oscillator	DS34	GE-1		PNP
X3	2SA102	1st IF Amp.	DS25	GE-1		PNP
X4	2SA102	2nd IF Amplifier	DS25	GE-1		PNP
X5	2SB171	Driver-Speech Amp.	DS26	GE-2	2N406	PNP
X6	2SB172	Output-Modulator	DS26	GE-2	2N408	PNP
X7	2SB172	Output-Modulator	DS26	GE-2	2N408	PNP
X8	2SA104	Trans. Oscillator	DS34	GE-1		PNP
X9	2SA70	Final Amplifier	DS34	GE-2		PNP

POWER RECTIFIERS & SIGNAL DIODES

ITEM No.	MEASURED CURRENT	ORIGINAL Part or Type No.	RECTIFIERS			NOTES
			MALLORY PART No.	RCA PART No.	SARKES TARZIAN PART No.	
X10		OA90				Detector

ELECTROLYTIC CAPACITORS

ITEM No.	RATING		REPLACEMENT DATA						
	CAP.	VOLT.	FANON-MASCO PART No.	AEROVOX PART No.	CORNELL-DUBILIER PART No.	GENERAL ELECTRIC PART No.	MALLORY PART No.	PYRAMID PART No.	SPRAGUE PART No.
C1	5	3		BCD3005	ECPB405	MT1-3	TT6X5	MLV5-3	VL-1035
C2	5	3		PTT4	NLW5-15	MT1-3	TT6X5	MLV5-3	TE-1052.2
C3	30	3		BCD3025	ECPB412	MT1-10	PET130	MLV30-6	VL-1043
C4	30	10		BCD10025	ECPB412	MT1-10	TT10X30	MLV25-10	VL-1132

FIXED CAPACITORS

ITEM No.	RATING	REMARKS	REPLACEMENT DATA					
			AEROVOX PART No.	CENTRALAB PART No.	CORNELL-DUBILIER PART No.	ELMENCO PART No.	MALLORY PART No.	SPRAGUE PART No.
C5	20		DI-20	DD-200	L10Q2	CCD-200	GP-420	10TS-Q20
C6	.01		TTD-01	CK-103	H05S1		TA-110	TG-S10
C7	.01		TTD-01	CK-103	H05S1		TA-110	TG-S10
C8	30		DI-30	DD-300	L10Q3	CCD-300	GP-430	10TS-Q30
C9	.01		TTD-01	CK-103	H05S1		TA-110	TG-S10
C10	.005		TTD-005	CK-502	H05D5	CCD-502	TA-250	TG-D50
C11	.04		TTD-05	CK-503	H05S5			TG-S50
C12	.04		TTD-05	CK-503	H05S5			TG-S50
C13	.04		TTD-05	CK-503	H05S5			TG-S50
C14	.04		TTD-05	CK-503	H05S5			TG-S50
C15	.005		TTD-005	CK-502	H05D5	CCD-502	TA-250	TG-D50
C16	.005		TTD-005	CK-502	H05D5	CCD-502	TA-250	TG-D50
C17	.04		TTD-05	CK-503	H05S5			TG-S50
C18	.1		TTD-1	CK-104	H05P1			TG-P10
C19	.01		TTD-01	CK-103	H05S1		TA-110	TG-S10
C20	30		DI-30	DD-300	L10Q3	CCD-300	GP-430	10TS-Q30
C21	.01		TTD-01	CK-103	H05S1		TA-110	TG-S10

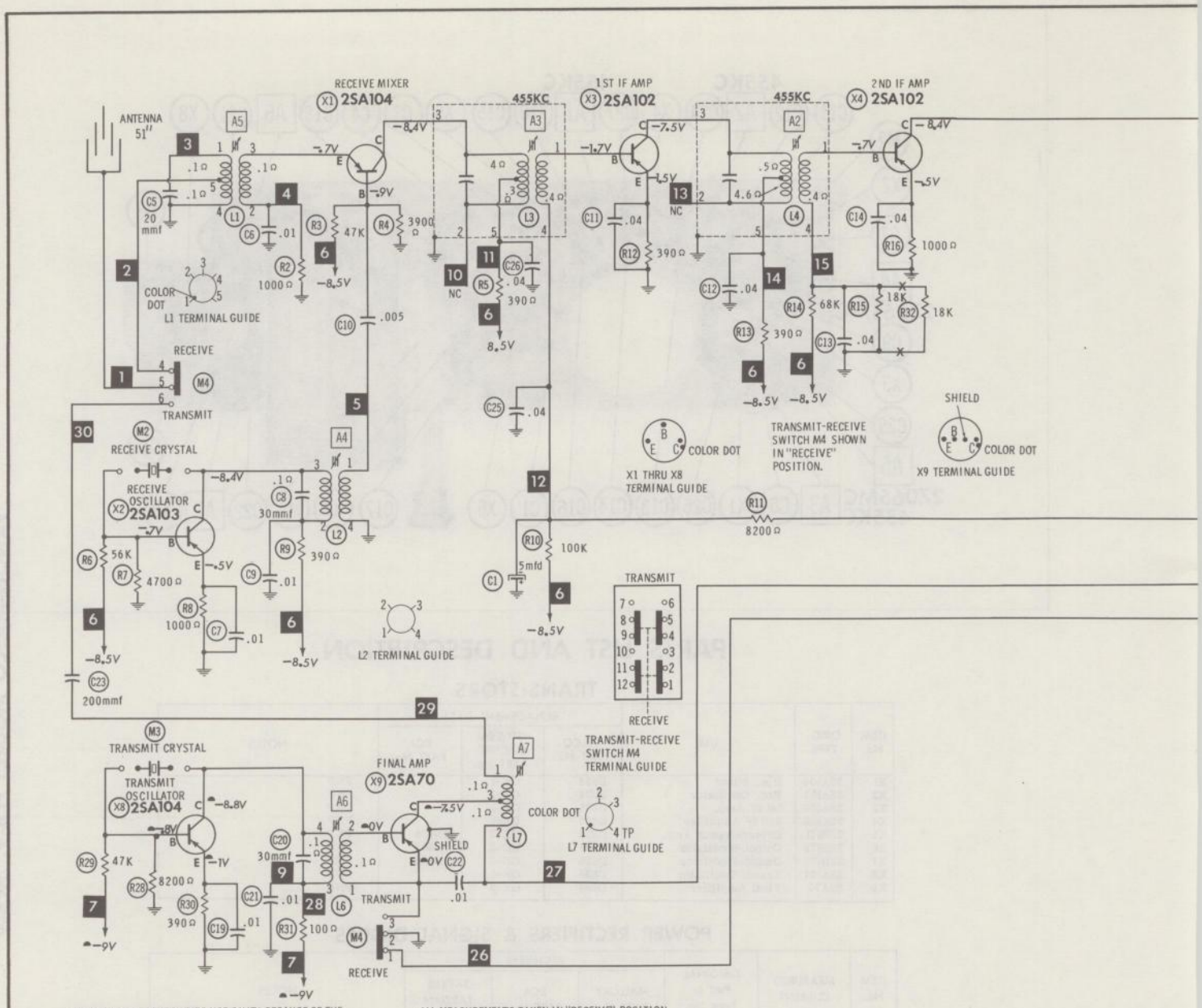
RECEIVE MIXER
X1 2SA104
1ST IF AMP
X3 2SA102
2ND IF AMP
X4 2SA102
455KC
455KC
ANTENNA 51"
A5
A3
A2
A4
A7
A6
C5 20 mmf
L1
C6 .01
R2 1000Ω
R3 47K
R4 3900Ω
C10 .005
L3
C26 .04
R5 390Ω
C11 .04
R12 390Ω
L4
C12 .04
R13 390Ω
R14 68K
R15 18K
R32 18K
C13 .04
C14 .04
R16 1000Ω
COLOR DOT
L1 TERMINAL GUIDE
RECEIVE
TRANSMIT
M4
M2
RECEIVE CRYSTAL
RECEIVE OSCILLATOR
X2 2SA103
R6 56K
R7 4700Ω
R8 1000Ω
C7 .01
C8 30mmf
L2
R9 390Ω
C9 .01
C23 200mmf
L2 TERMINAL GUIDE
C25 .04
R10 100K
C1 5mfd
R11 8200Ω
COLOR DOT
X1 THRU X8 TERMINAL GUIDE
TRANSMIT-RECEIVE SWITCH M4 SHOWN IN "RECEIVE" POSITION.
SHIELD
COLOR DOT
X9 TERMINAL GUIDE
TRANSMIT
RECEIVE
TRANSMIT-RECEIVE SWITCH M4 TERMINAL GUIDE
M3
TRANSMIT CRYSTAL
TRANSMIT OSCILLATOR
X8 2SA104
R29 47K
R28 8200Ω
R30 390Ω
C19 .01
C20 30mmf
C21 .01
R31 100Ω
L6
FINAL AMP
X9 2SA70
SHIELD
C22 .01
L7
COLOR DOT
L7 TERMINAL GUIDE
TRANSMIT
RECEIVE
L6 TERMINAL GUIDE
RESISTANCE MEASUREMENTS NOT GIVEN BECAUSE OF THE WIDE VARIATION IN INTERNAL TRANSISTOR RESISTANCE.
ALL MEASUREMENTS TAKEN IN "RECEIVE" POSITION UNLESS OTHERWISE DESIGNATED.
TAKEN IN "TRANSMIT" POSITION.
10ma. RECEIVE (NO SIGNAL)
26ma. TRANSMIT (NO MODULATION)
SW ON VOLUME CONTROL
M1 9 VOLT BATTERY
SOURCE
TRANSMIT
RECEIVE
R27 100Ω
C24 .04
1. DC voltage measurements taken with vacuum tube voltmeter.
2. Socket connections or transistor terminals are shown as bottom views.
3. Measured values are from socket pin or terminal to common ground.
4. Nominal tolerance on component values makes possible a variation of ± 15% in voltage and resistance readings.
A PHOTOFACT STANDARD NOTATION SCHEMATIC with CIRCUITRACE
©Howard W. Sams & Co., Inc. 1963
NUMBERS ASSIGNED TO COILS, SWITCHES, PLUGS, SOCKETS, AND TRANSFORMERS ARE TO FACILITATE CIRCUIT TRACING OR COMPONENT REPLACEMENT AND MAY NOT NECESSARILY BE FOUND ON THE UNIT.

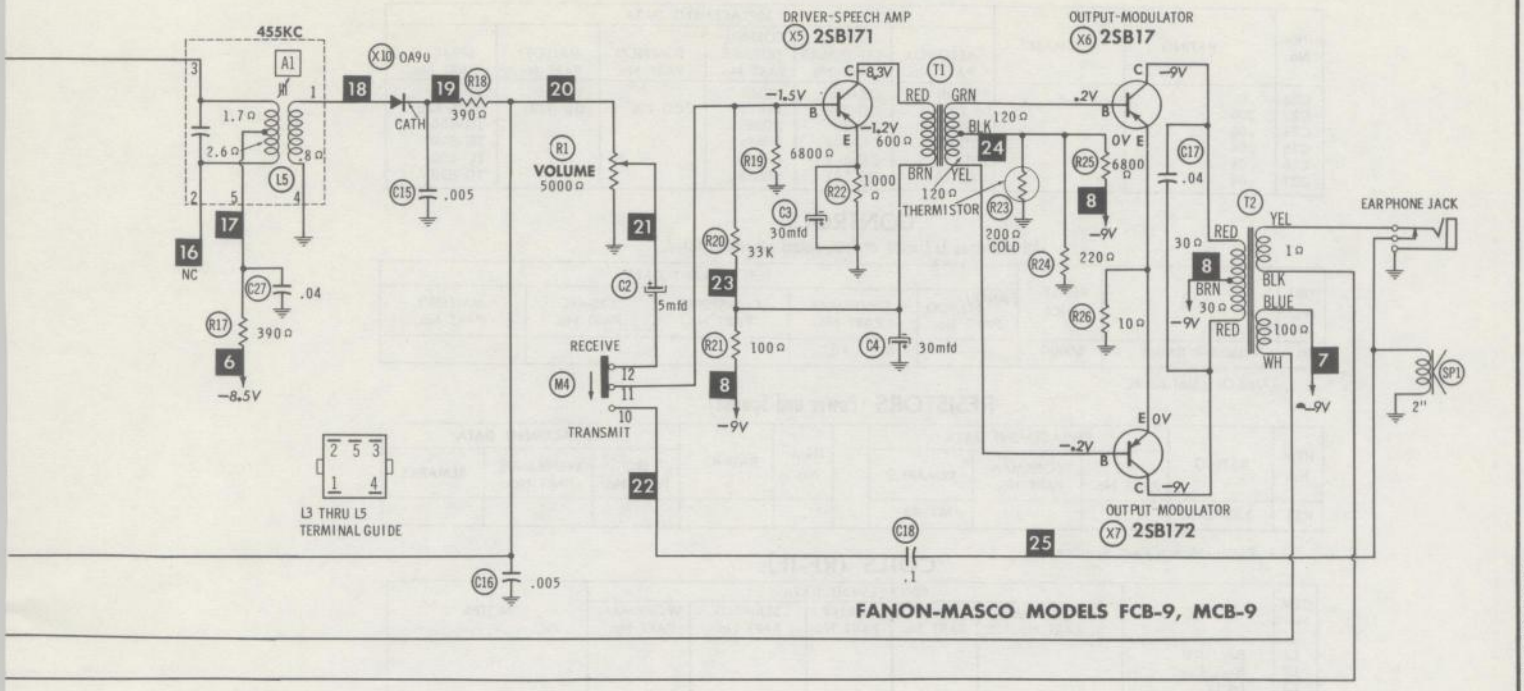

FANON-MASCO MODELS FCB-9, MCB-9

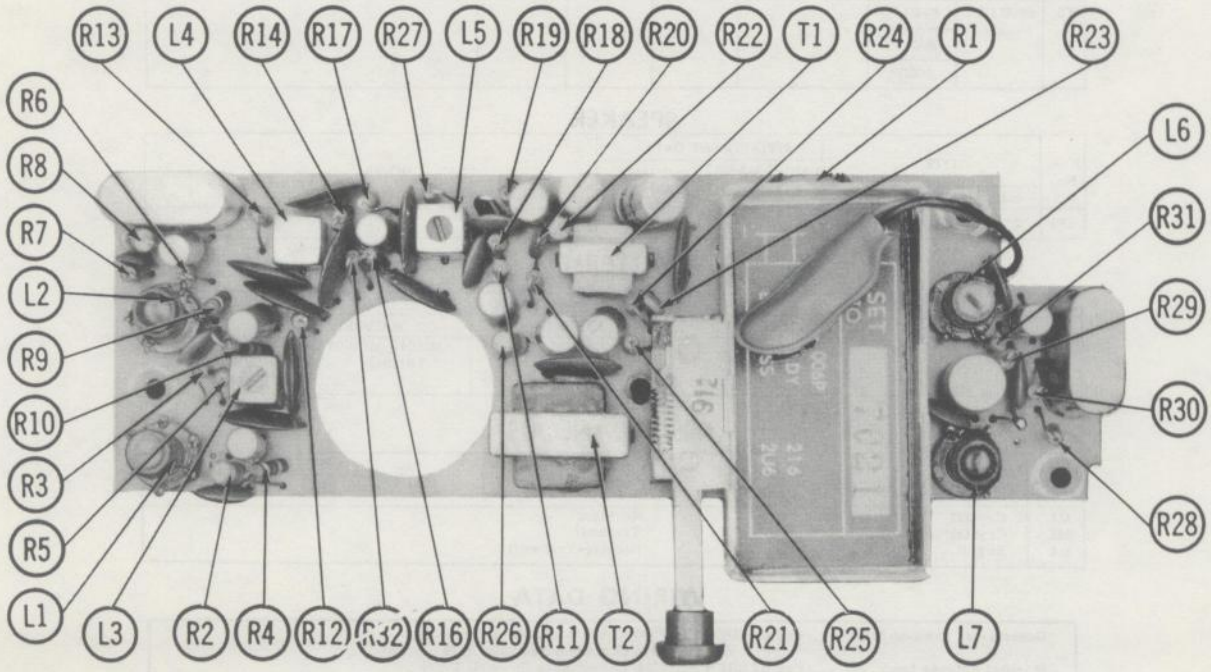

PARTS LIST AND DESCRIPTION (CONTINUED)

FIXED CAPACITORS (cont)

ITEM No.	RATING	REMARKS	REPLACEMENT DATA					
			AEROVOX PART No.	CENTRALAB PART No.	CORNELL-DUBILIER PART No.	ELMENCO PART No.	MALLORY PART No.	SPRAGUE PART No.
C22	.01		TTD-01	CK-103	H05S1		TA-110	TG-S10
C23	200		DI-200	DD-201	L10T2	CCD-201	GP-320	10TS-T20
C24	.04		TTD-05	CK-503	H05S5			TG-S50
C25	.04		TTD-05	CK-503	H05S5			TG-S50
C26	.04		TTD-05	CK-503	H05S5			TG-S50
C27	.04		TTD-05	CK-503	H05S5			TG-S50

CONTROLS

All wattages 1/2 watt, or less, unless otherwise listed.

ITEM No.	USE	RESISTANCE	REPLACEMENT DATA				
			FANON-MASCO PART No.	CENTRALAB PART No.	CLAROSTAT PART No.	CTS-IRC PART No.	MALLORY PART No.
R1	Volume & Switch	5000Ω		B16-214①			

①Use Original Knob.

RESISTORS (Power and Special)

ITEM No.	RATING	REPLACEMENT DATA				ITEM No.	RATING	REPLACEMENT DATA		
		IRC PART No.	WORKMAN PART No.	REMARKS				IRC PART No.	WORKMAN PART No.	REMARKS
R23	200Ω Cold			#MT-25						

Fanon-Masco Part Number.

COILS (RF-IF)

ITEM No.	USE	REPLACEMENT DATA					NOTES
		FANON-MASCO PART No.	MERIT PART No.	MILLER PART No.	STANCOR PART No.	WORKMAN PART No.	
L1	Rec. RF						
L2	Rec. Osc.						
L3	1st IF						
L4	2nd IF						
L5	3rd IF						
L6	Transmit Osc.						
L7	Final						

TRANSFORMER (DRIVER)

ITEM No.	TURNS RATIO		REPLACEMENT DATA					NOTES
	PRI.	SEC.	FANON-MASCO PART No.	MERIT PART No.	STANCOR PART No.	THORDARSON PART No.	TRIAD PART No.	
T1	1.7	1						

TRANSFORMER (AUDIO OUTPUT)

ITEM No.	IMPEDANCE		REPLACEMENT DATA					NOTES
	PRI.	SEC. 1	FANON-MASCO PART No.	Merit PART No.	Stancor PART No.	Thordarson PART No.	Triad PART No.	
T2	500Ω CT	6-8Ω						
		SEC. 2						
		500Ω						

SPEAKER

ITEM No.	TYPE			REPLACEMENT DATA		NOTES
	SIZE	FIELD	V. C. IMP.	FANON-MASCO PART No.	QUAM PART No.	
SP1	2"	PM	6-8Ω			

BATTERIES

ITEM No.	VOLTAGE	FANON-MASCO PART No.	REPLACEMENT DATA			NOTES
			BURGESS	EVEREADY	MALLORY	
M1	9V		2U6① H146③	216① 528 ② E146③	M1604①MN1604② TR146③	①Zinc Carbon ②Manganese ③ Mercury

MISCELLANEOUS

ITEM No.	PART NAME	FANON-MASCO PART No.	NOTES
M2	Crystal		Receiver
M3	Crystal		Transmit
M4	Switch		Receive-Transmit

WIRING DATA

General-use Hook-up Wire .... Use BELDEN No. 8530 (Solid) Available in 12 Colors
8524 (Stranded) Available in 12 Colors)
Shielded Antenna Lead ..... Use BELDEN No. 8214 Lowest Loss (RG-8/U Type)
8237 Low Loss (RG-8/U)
8240 (Solid) Miniature (RG-58/U)
8259 (Stranded) Miniature (RG-58A/U)
Coiled Microphone Cable ..... Use BELDEN No. 8499 Single Conductor Shielded (Neoprene)
8498 Single Conductor Shielded (Vinyl)
Ignition Noise Suppression .... Use BELDEN No. 7300-Series Spark-Plug Sets
Bonding Strap ..... Use BELDEN No. 8661 (3/8 In.)

TRADE NAME: Gonset Models G-15(3428), G-15 (3429)

SUPPLIER: Gonset Inc., A Subsidiary of Altec Lansing Corp., 1515 So. Manchester Ave., Anaheim, California

TYPE SET: 10 Tube Transceiver

POWER SUPPLY: 110 — 120 Volts AC, 60 Cycles (or)
6 (or) 12 Volt Storage Battery

RATING: 72 Watts, .68A @ 117 VAC (Receiver)
70 Watts, .66A @ 117 VAC (Transmit)
5.2A @ 12.6VDC
10.4A @ 6.3VDC

TUNING RANGE: Any 4 CB Channels 1 thru 22
Receiver may be continuously tuned

ALIGNMENT INSTRUCTIONS

ALIGNMENT INSTRUCTIONS—READ CAREFULLY BEFORE ATTEMPTING ALIGNMENT

Suggested Alignment Tools:
A1, A2, A3, A4, A5, A6, A8, A9, A10, A14, A15, A16, A17, A18, A19....GENERAL CEMENT #5004, 5009, 8195, 8274, 8275, 8607, 8728, 8987, 8988, 8989, 9291
WALSCO #2515, 2520, 2522, 2523, 2531, 2532, 2534, 2537, 2538
A7, A11, A12, A13.....GENERAL CEMENT #8282, 8606, 8606-L, 9295, 9440
WALSCO #2526, 2543, 2544, 2545

RECEIVER ALIGNMENT

Connect DC probe of VTVM to point Ⓐ, common to ground.
Squelch control fully clockwise.

	SIGNAL GENERATOR	CHANNEL	ADJUST	REMARKS
1.	High side thru .01mfd to pin 7 (grid) of V3, common to ground. Tune to 455KC (Unmod.)	Any	A1, A2, A3, A4, A5, A6	Adjust for maximum deflection.
2.	High side thru .01mfd to pin 2 (grid) of V2. Tune to 1650KC (Unmod.)	Any	A7, A8, A9	"
3.	High side to antenna terminal, common to ground. Tune to Channel Frequency.	22 (27.225MC)	A10	Place receiver selector switch in manual tuning position. Adjust for maximum deflection.
4.	"	12 (27.105MC)	A11, A12	Adjust for maximum deflection.

TRANSMITTER ALIGNMENT

ONLY THOSE PERSONS PROPERLY LICENSED ARE PERMITTED TO MAKE REPAIRS OR ADJUSTMENTS WHICH MAY RESULT IN ILLEGAL OPERATION. (REFER TO FCC RULES & REGULATIONS PART 19, SUBPART D, SECTION 19.71)

	SPECIAL INSTRUCTIONS	INDICATOR	ADJUST	REMARKS
1.	Connect dummy load or antenna. Set channel selector near center frequency.	RF Wattmeter and tuning meter front panel.	A13	Connect DC probe of VTVM to point Ⓑ, common to ground. Depress microphone button. Adjust A13 for maximum deflection. Rock A13 to each side of peak, noting rate of dropoff. Set just below peak on side of dropoff. Remove VTVM.
2.	Antenna should be connected.	"	A14, A15	Key transmitter. Adjust for maximum as indicated by RF wattmeter or front panel meter.
3.		Qualified frequency meter.	A16, A17, A18, A19	Adjust so that each corresponding channel falls within .005% of frequency stamped on crystal.

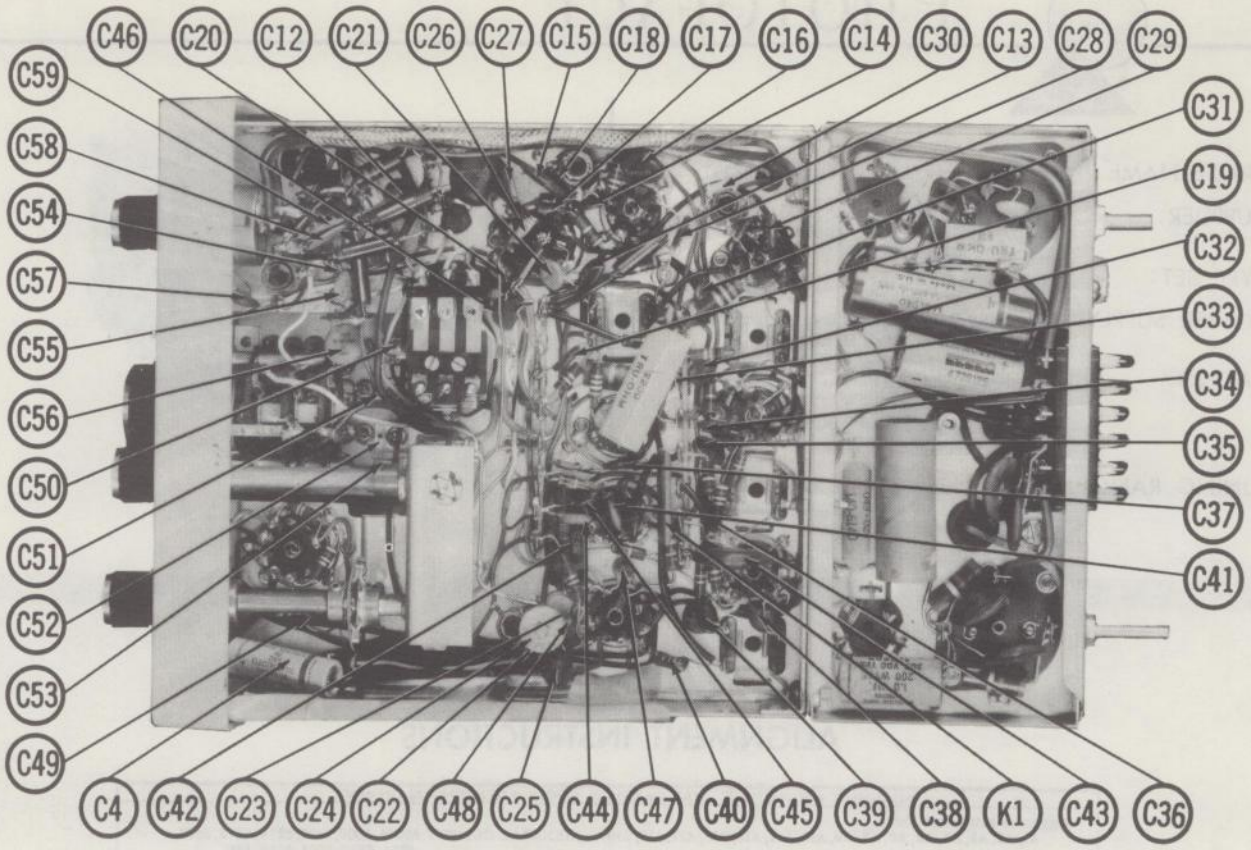
C46
C20
C12
C21
C26
C27
C15
C18
C17
C16
C14
C30
C13
C28
C29
C59
C58
C54
C57
C55
C56
C50
C51
C52
C53
C49
C31
C19
C32
C33
C34
C35
C37
C41
C4
C42
C23
C24
C22
C48
C25
C44
C47
C40
C45
C39
C38
K1
C43
C36

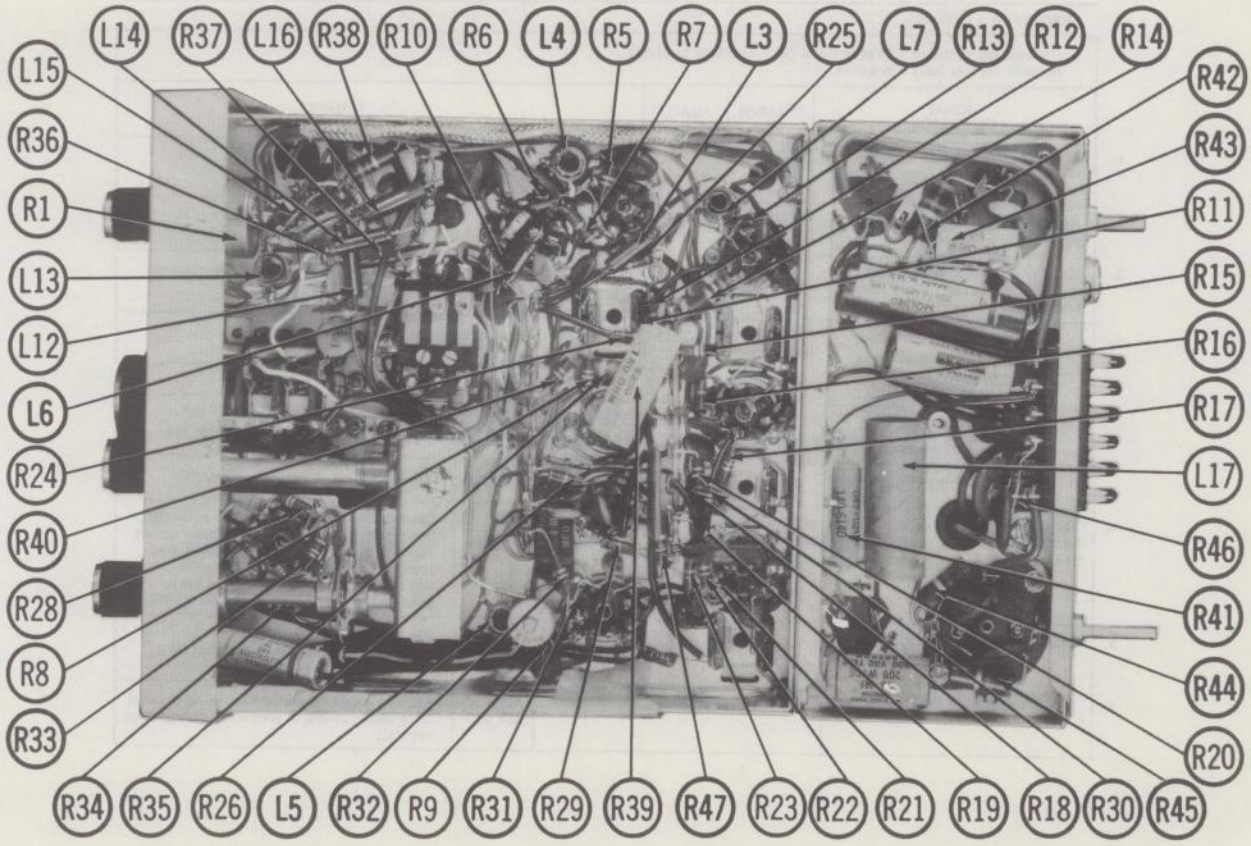
L14
R37
L16
R38
R10
R6
L4
R5
R7
L3
R25
L7
R13
R12
R14
L15
R36
R1
L13
L12
L6
R24
R40
R28
R8
R33
R42
R43
R11
R15
R16
R17
L17
R46
R41
R44
R20
R34
R35
R26
L5
R32
R9
R31
R29
R39
R47
R23
R22
R21
R19
R18
R30
R45

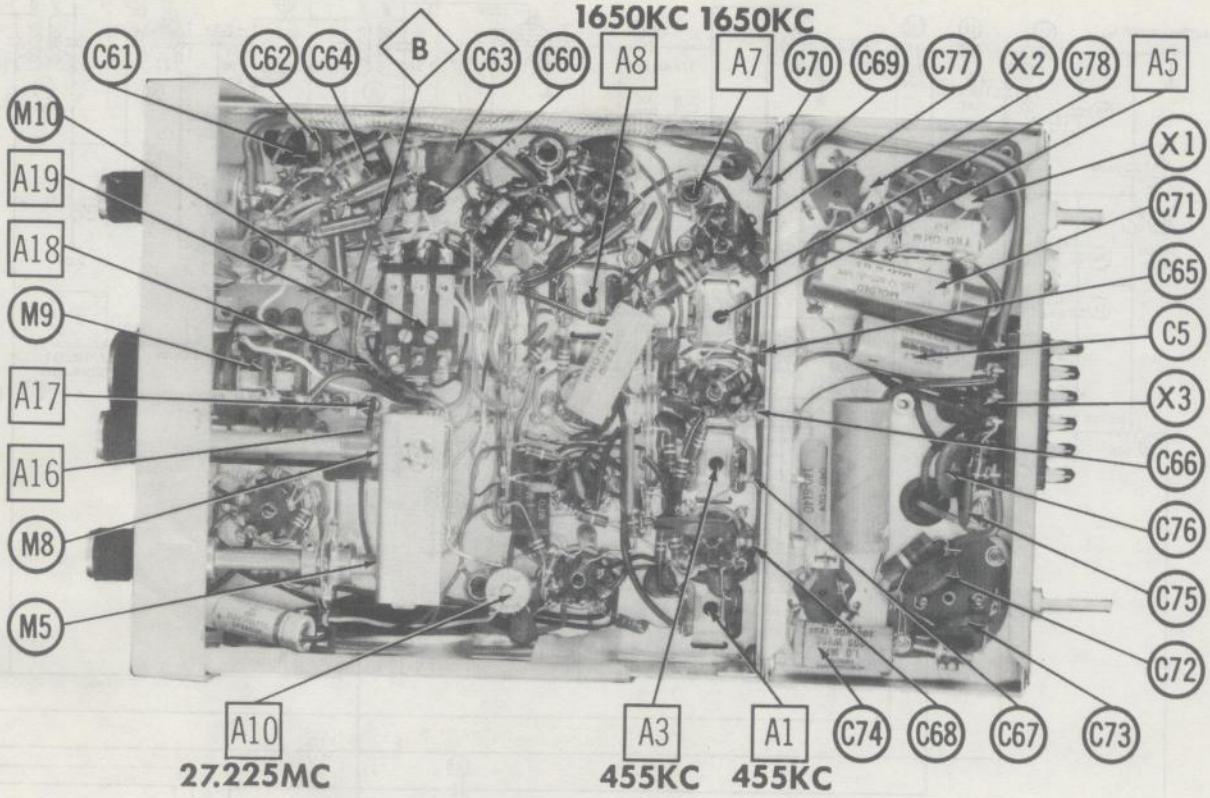
1650KC
1650KC
C61
C62
C64
B
C63
C60
A8
A7
C70
C69
C77
X2
C78
A5
M10
A19
A18
M9
A17
A16
M8
M5
X1
C71
C65
C5
X3
C66
C76
C75
C72
A10
27.225MC
A3
455KC
A1
455KC
C74
C68
C67
C73

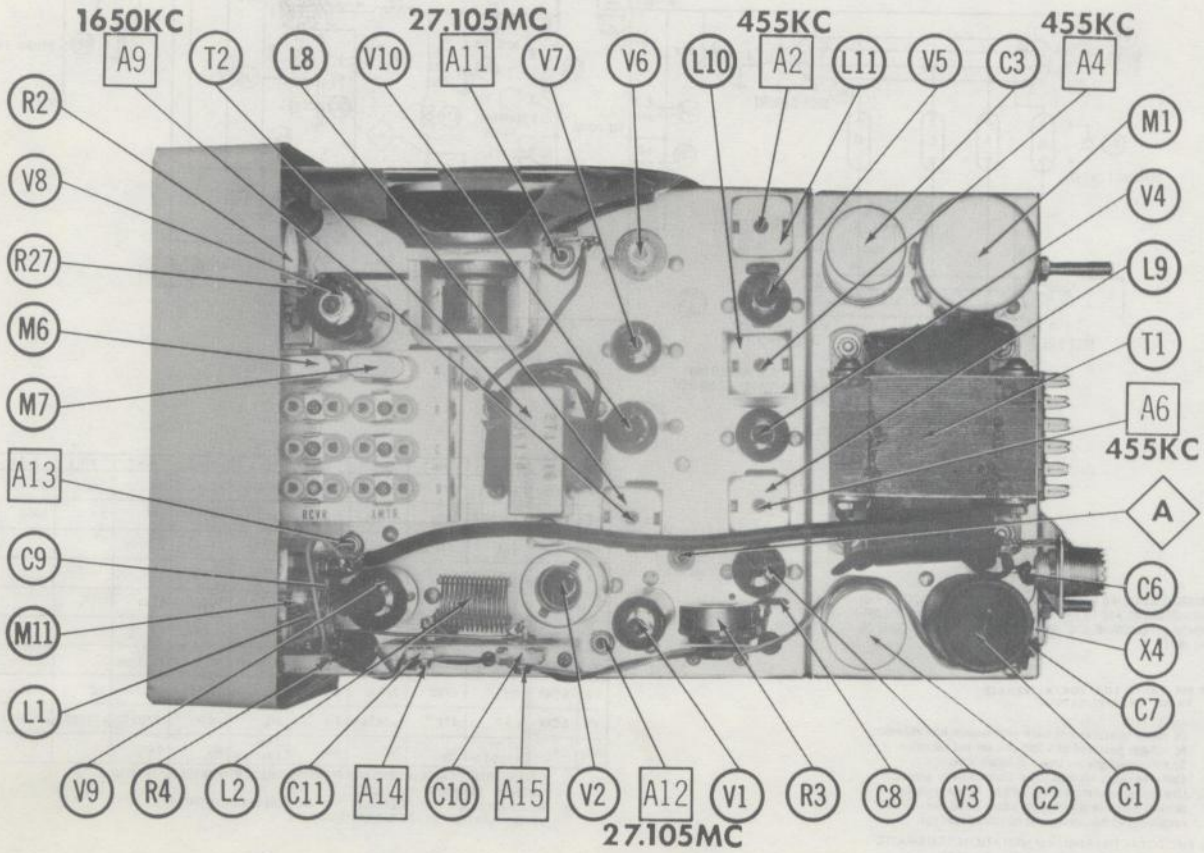
1650KC
A9
T2
L8
V10
27.105MC
A11
V7
V6
L10
455KC
A2
L11
V5
C3
455KC
A4
R2
V8
R27
M6
M7
A13
C9
M11
L1
M1
V4
L9
T1
A6
455KC
A
C6
X4
C7
V9
R4
L2
C11
A14
C10
A15
V2
A12
27.105MC
V1
R3
C8
V3
C2
C1

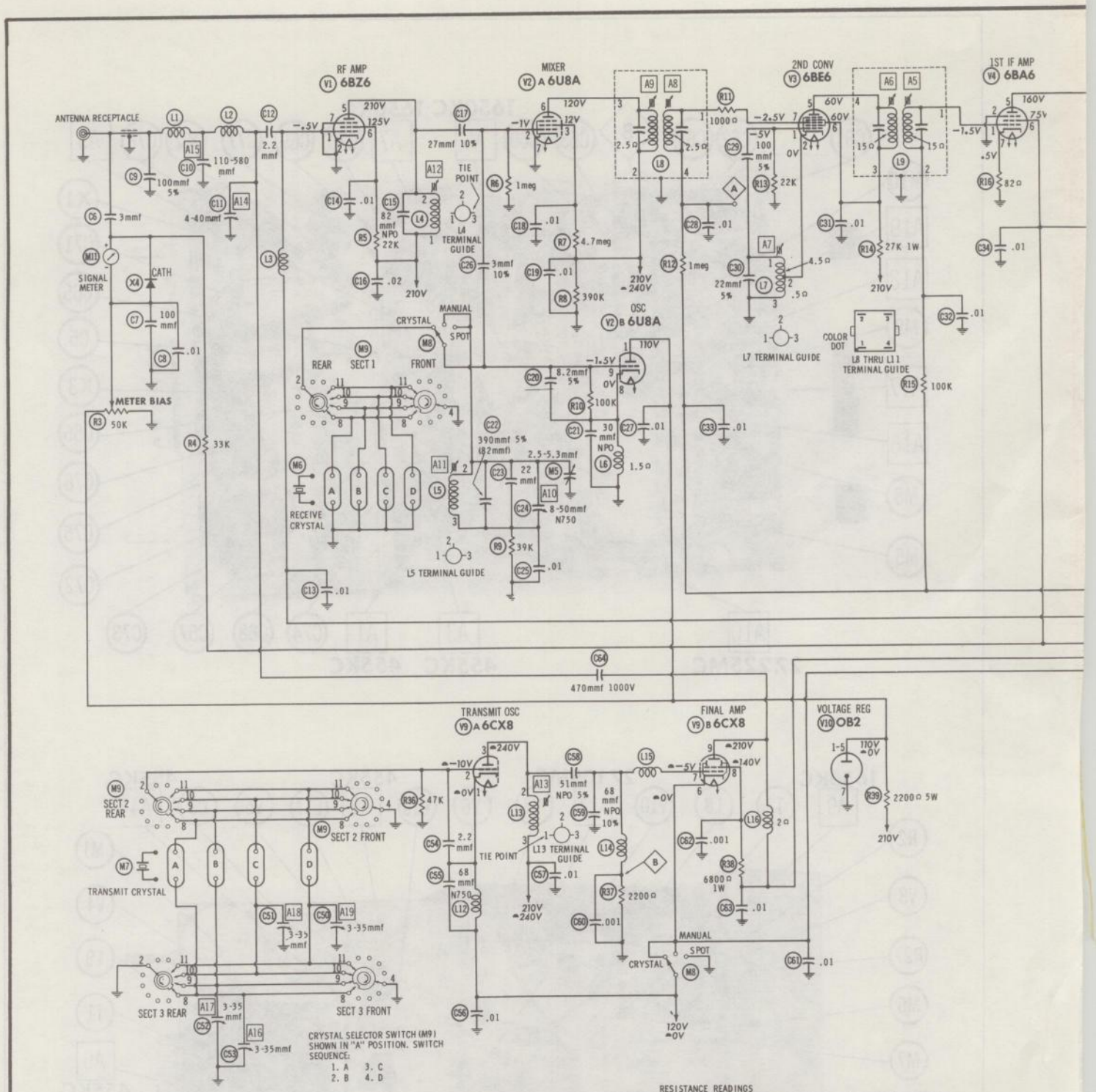

RESISTANCE READINGS

ITEM	TUBE	Pin 1	Pin 2	Pin 3	Pin 4	Pin 5	Pin 6	Pin 7	Pin 8	Pin 9
V1	6BZ6	8.2meg	0Ω	FIL	FIL	†430Ω	†22K	0Ω		
V2	6U8	†2200Ω	1meg	†5meg	FIL	FIL	†430Ω	0Ω	1Ω	100K
V3	6BE6	22K	.5Ω	FIL	FIL	†27K	†27K	2.5meg		
V4	6BA6	1.5meg	0Ω	FIL	FIL	†10K	†78K	82Ω		
V5	6BA6	1meg	0Ω	FIL	FIL	*†INF †10K	†68K	82Ω		
V6	6AV6	2.2meg	0Ω	FIL	FIL	450K	8.2meg	†270K		
V7	6AL5	1.5meg	450K	FIL	FIL	2.5meg	NC	†1.5meg		
V8	6CW5	NC	470K	220Ω	FIL	FIL	TP	†700Ω	NC	†100Ω
V9	6CX8	*0Ω	47K	*†430Ω	FIL	FIL	*0Ω	2200Ω	*†7500Ω	*†750Ω
V10	OB2	*†INF †2600Ω	NC	NC	NC	*†INF †2600Ω	NC	0Ω		

ALL READINGS TAKEN IN "RECEIVE" POSITION UNLESS OTHERWISE DESIGNATED.
* TAKEN IN "TRANSMIT" POSITION.
NC NO CONNECTION TP TIEPOINT † MEASURED FROM OUTPUT OF X1
SQUELCH CONTROL SET FOR NORMAL OPERATION.

NUMBERS ASSIGNED TO COILS, SWITCHES, PLUGS, SOCKETS, AND TRANSFORMERS ARE TO FACILITATE CIRCUIT TRACING OR COMPONENT REPLACEMENT AND MAY NOT NECESSARILY BE FOUND ON THE UNIT.

● SEE PARTS LIST FOR ALTERNATE VALUE OR APPLICATION

1. DC voltage measurements taken with vacuum tube voltmeter; AC voltages measured with 1000 ohm per volt voltmeter.
2. Socket connections are shown as bottom views.
3. Measured values are from socket pin to common ground.
4. Line voltage maintained at 117 volts for voltage readings.
5. Nominal tolerance of component values makes possible a variation of ±15% in voltage and resistance readings.

A PHOTOFACT STANDARD NOTATION SCHEMATIC

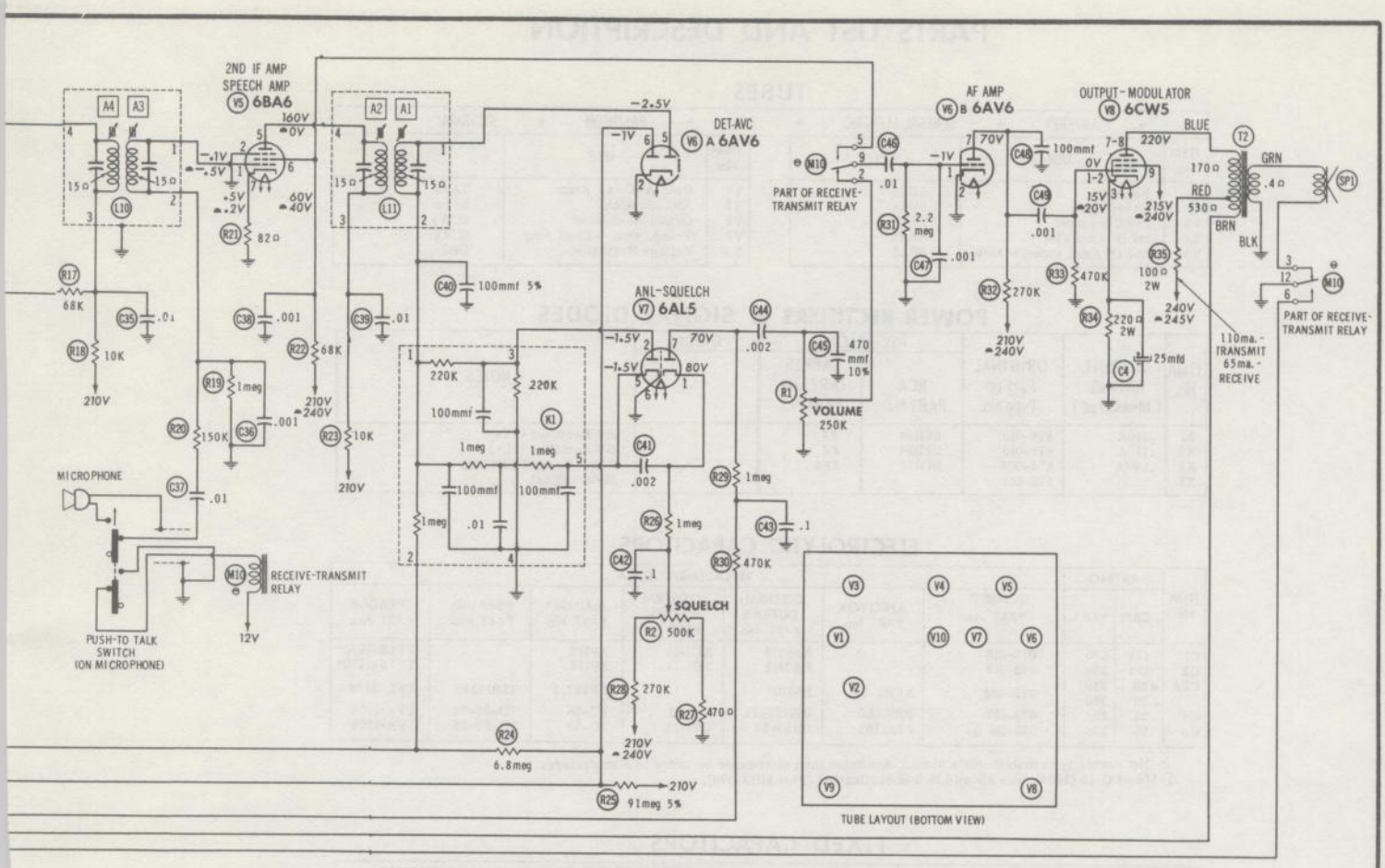

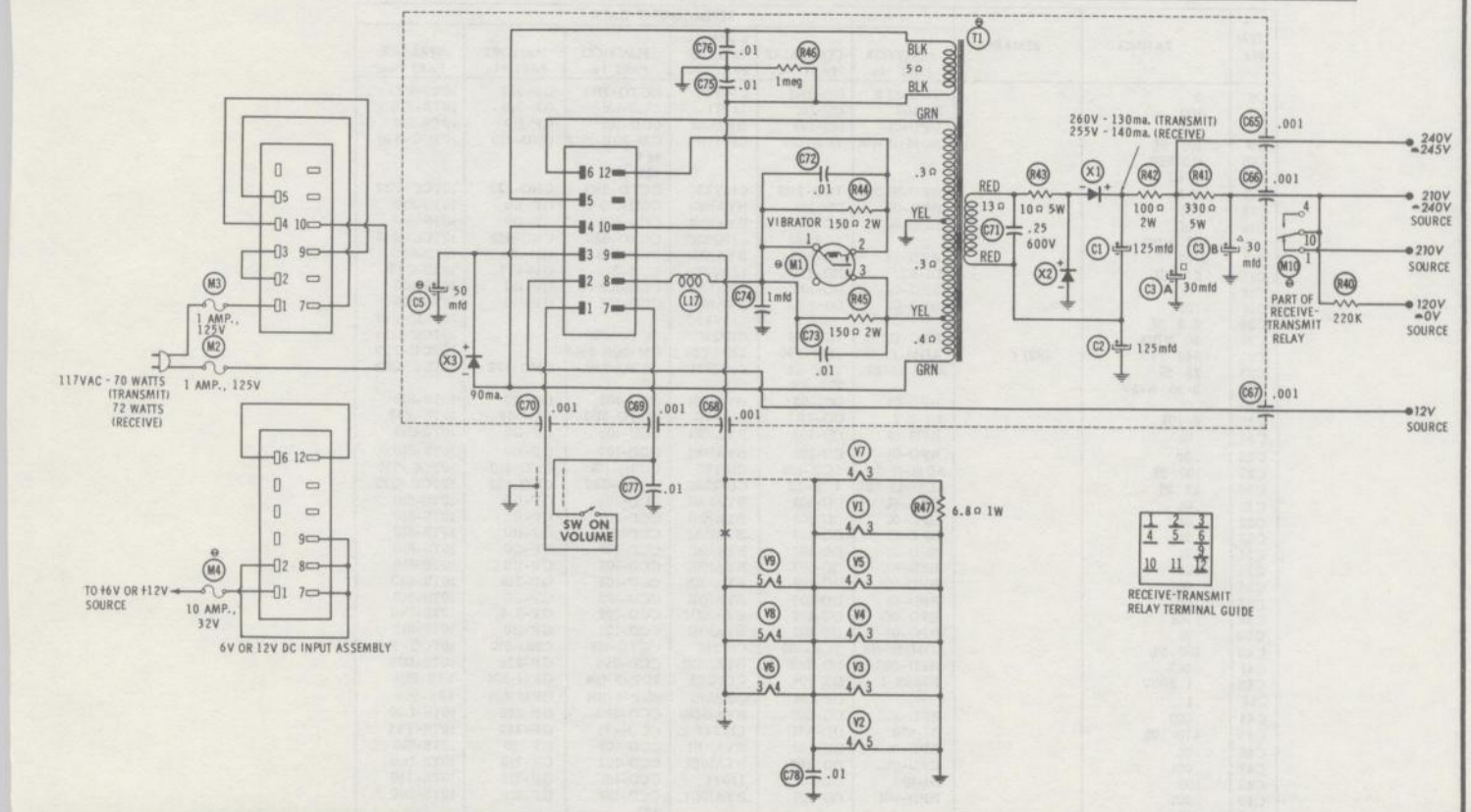

"SPOT" POSITION OF SWITCH M8 ENABLES THE RECEIVER TO BE TUNED TO THE EXACT TRANSMITTER FREQUENCY.

GONSET MODELS
G-15 (3428), G-15 (3429)

PARTS LIST AND DESCRIPTION

TUBES

◆ AMPEREX ◆ GENERAL ELECTRIC ◆ RCA ◆ RAYTHEON ◆ SYLVANIA ◆

ITEM No.	USE	TYPE
V1	RF Amp.	6BZ6
V2	Mixer-Osc.	6U8A
V3	2nd Converter	6BE6
V4	1st IF Amplifier	6BA6
V5	2nd IF Amp. -Speech Amp.	6BA6
V6	Det. -AVC-AF Amp.	6AV6
V7	ANL-Squelch	6AL5
V8	Output-Modulator	6CW5
V9	Trans. Osc. -Final Amp.	6CX8
V10	Voltage Regulator	OB2

POWER RECTIFIERS & SIGNAL DIODES

ITEM No.	CURRENT RATING (Measured)	ORIGINAL Part or Type No.	RECTIFIERS RCA PART No.	RECTIFIERS SARKES TARZIAN PART No.	DIODES	NOTES
X1	.140A	474-010	1N3194	F4		HV Rectifier (5E4)
X2	.140A	474-010	1N3194	F4		HV Rectifier (5E4)
X3	.090A	474-004	1N3193	2F4		Relay Control (1N2020)
X4		475-001				Meter Signal

ELECTROLYTIC CAPACITORS

ITEM No.	RATING CAP.	RATING VOLT.	GONSET PART No.	AEROVOX PART No.	CORNELL-DUBILIER PART No.	GENERAL ELECTRIC PART No.	MALLORY PART No.	PYRAMID PART No.	SPRAGUE PART No.
C1	125	200	073-018		XA0312	XC1-14	FP122		TVLS-1470*
C2	125	200	073-019		XA0312	XC1-14	FP122		TVLS-1470*
C3A	■30	350	073-026	AFH2-39	B0310		FP227.3	TMD2385	TVL-2628
B	▲30	350							
C4	25	25	073-127	PRS1260	BBR25-25	QT1-11	TC-26	TD-25-25	TVA-1205
C5	50	25	073-118 ①	PRS1265	BR50-25	QT1-15	TC-29	TD-50-25	TVA-1206

* Not normally in distributor's stock. Available thru distributor on order to manufacturer.
① Model G-15 (3428) uses 250mfd in this application (Part #073-078).

FIXED CAPACITORS

ITEM No.	RATING	REMARKS	AEROVOX PART No.	CENTRALAB PART No.	CORNELL-DUBILIER PART No.	ELMENCO PART No.	MALLORY PART No.	SPRAGUE PART No.
C6	3		NPO-SI 3	DD-3R3	C10V3C	CCTO-3R3	GP-533	10TS-V33
C7	100		DI-100	DD-101	L10T1	CCD-101	GP-310	10TS-T10
C8	.01		BPD-01	DD-103	BYA10S1	CCD-103	GP-110	10TS-S10
C9	100 5%		ADM-15-101	TCZ-100	C10T1U	CM-20B-101J	CNO-310	10TCC-T10
C10	110-580					467		
C11	4-40					422		
C12	2.2		NPO-SI 3.3	TCZ-2R2	C10V22C	CCTO-2R2	CNO-522	10TCC-V22
C13	.01		BPD-01	DD-103	BYA10S1	CCD-103	GP-110	10TS-S10
C14	.01		BPD-01	DD-103	BYA10S1	CCD-103	GP-110	10TS-S10
C15	82 NPO			TCZ-82	C10Q82C	CCTO-820	CNO-482	10TCC-Q82
C16	.02		BPD-02	DD-203	BYA10S2	CCD-203	GP-120	10TS-S20
C17	27 10%		DI-27	DD-270	L10Q27	CCD-270	GP-427	10TS-Q27
C18	.01		BPD-01	DD-103	BYA10S1	CCD-103	GP-110	10TS-S10
C19	.01		BPD-01	DD-103	BYA10S1	CCD-103	GP-110	10TS-S10
C20	8.2 5%				C10V82C			10TCC-V82
C21	30 NPO		NPO-DI 33	TCZ-30	C10Q3C	CCTO-300		10TCC-Q30
C22	340 5%	(82) †	ADM-15-391	TCN-390	22R5T39	CM-20B-391J		10TCU-T39
C23	22 5%		ADM-15-220	TCZ-22	C10Q22C	CCTO-220	CNO-422	10TCC-Q22
C24	8-50 N750			822-AN				
C25	.01		BPD-01	DD-103	BYA10S1	CCD-103	GP-110	10TS-S10
C26	3 10%		DI-3.3	DD-3R3	C10V3C	CCTO-3R3	GP-533	10TS-V33
C27	.01		BPD-01	DD-103	BYA10S1	CCD-103	GP-110	10TS-S10
C28	.01		BPD-01	DD-103	BYA10S1	CCD-103	GP-110	10TS-S10
C29	100 5%		ADM-15-101	TCZ-100	C10T1C	CCTO-101	CNO-310	10TCC-T10
C30	22 5%		ADM-15-220	TCZ-22	C10Q22C	CCTO-220	CNO-422	10TCC-Q22
C31	.01		BPD-01	DD-103	BYA10S1	CCD-103	GP-110	10TS-S10
C32	.01		BPD-01	DD-103	BYA10S1	CCD-103	GP-110	10TS-S10
C33	.01		BPD-01	DD-103	BYA10S1	CCD-103	GP-110	10TS-S10
C34	.01		BPD-01	DD-103	BYA10S1	CCD-103	GP-110	10TS-S10
C35	.01		BPD-01	DD-103	BYA10S1	CCD-103	GP-110	10TS-S10
C36	.001		BPD-001	DD-102	BYA10D1	CCD-102	GP-210	10TS-D10
C37	.01		BPD-01	DD-103	BYA10S1	CCD-103	GP-110	10TS-S10
C38	.001		BPD-001	DD-102	BYA10D1	CCD-102	GP-210	10TS-D10
C39	.01		BPD-01	DD-103	BYA10S1	CCD-103	GP-110	10TS-S10
C40	100 5%		ADM-15-101	TCZ-100	C10T1C	CCTO-101	CNO-310	10TCC-T10
C41	.002		BPD-002	DD-202	BYA10D2	CCD-202	GP-220	10TS-D20
C42	.1 200V		P288N-1	DF-104	CUB2P1	2DP-3-104	GEM-201	2PS-P10
C43	.1			DF-104	CUB6P1	6DP-4-104	GEM-601	6PS-P10
C44	.002		BPD-002	DD-202	BYA10D2	CCD-202	GP-220	10TS-D20
C45	470 10%		DI-470	DD-471	L10T47	CCD-471	GP-347	10TS-T47
C46	.01		BPD-01	DD-103	BYA10S1	CCD-103	GP-110	10TS-S10
C47	.001		BPD-001	DD-202	BYA10D1	CCD-102	GP-210	10TS-D10
C48	100		DI-100	DD-101	L10T1	CCD-101	GP-310	10TS-T10
C49	.001		BPD-001	DD-102	BYA10D1	CCD-102	GP-210	10TS-D10
C50	3-35					422		
C51	3-35					422		
C52	3-35					422		
C53	3-35					422		
C54	2.2		NPO-SI 2.2	TCZ-2R2	C10V22C	CCTO-2R2	CNO-522	10TCC-V22
C55	68 N750		N750-DI 68	TCN-68	C10Q68U	CCTN-680	CN7-468	10TCU-Q68
C56	.01		BPD-01	DD-103	BYA10S1	CCD-103	GP-110	10TS-S10
C57	.01		BPD-01	DD-103	BYA10S1	CCD-103	GP-110	10TS-S10
C58	51 NPO 5%		NPO-DI 50	TCZ-51	C10Q51C	CCTO-510	CNO-450	10TCC-Q50
C59	68 NPO 10%		NPO-DI 68	TCZ-68	C10Q68C	CCTO-680	CNO-468	10TCC-Q68
C60	.001		BPD-001	DD-102	BYA10D1	CCD-102	GP-210	10TS-D10

PARTS LIST AND DESCRIPTION (CONTINUED)

FIXED CAPACITORS (cont)

ITEM No.	RATING	REMARKS	REPLACEMENT DATA					
			AEROVOX PART No.	CENTRALAB PART No.	CORNELL-DUBILIER PART No.	ELMENCO PART No.	MALLORY PART No.	SPRAGUE PART No.
C61	.01		BPD-01	DD-103	BYA10S1	CCD-103	GP-110	10TS-S10
C62	.001		BPD-001	DD-102	BYA10D1	CCD-102	GP-210	10TS-D10
C63	.01		BPD-01	DD-103	BYA10S1	CCD-103	GP-110	10TS-S10
C64	470			DD30-471	HVB16T47	CCS-471	GP-347	10TS-T47
C65	.001		EF-001	FT-1000		CCF-102	CT250A	BH-240
C66	.001		EF-001	FT-1000		CCF-102	CT250A	BH-240
C67	.001		EF-001	FT-1000		CCF-102	CT250A	BH-240
C68	.001		EF-001	FT-1000		CCF-102	CT250A	BH-240
C69	.001		FF-001	FT-1000		CCF-102	CT250A	BH-240
C70	.001		EF-001	FT-1000		CCF-102	CT250A	BH-240
C71	.25 600V		P688N-25		CUB6P21	6DP-5-254	GEM-6025	6PS-P25
C72	.01		BPD-01	DD-103	BYA10S1	CCD-103	GP-110	10TS-S10
C73	.01		BPD-01	DD-103	BYA10S1	CCD-103	GP-110	10TS-S10
C74	1mfd 200V		P288N-1		CUB2W1		GEM-21	2TM-M1
C75	.01		BPD-01	DD-103	BYA10S1	CCD-103	GP-110	10TS-S10
C76	.01		BPD-01	DD-103	BYA10S1	CCD-103	GP-110	10TS-S10
C77	.01		BPD-01	DD-103	BYA10S1	CCD-103	GP-110	10TS-S10
C78	.01		BPD-01	DD-103	BYA10S1	CCD-103	GP-110	10TS-S10

† Alternate Value.

CONTROLS

All wattages 1/2 watt, or less, unless otherwise listed.

ITEM No.	USE	RESISTANCE	REPLACEMENT DATA				
			GONSET PART No.	CENTRALAB PART No.	CLAROSTAT PART No.	CTS-IRC PART No.	MALLORY PART No.
R1	Volume & Switch	250K	052-081	B-51, KR-1 or (F2-250K, KR-1, SU204)	A47-250K-Z, SWE-12, FS-3	Q13-130, 76-1 *	U44, US-26 or (UA254A, US-41, SF1000)
R2	Squelch	500K	052-082	B-59 or (F1-500K, SU204)	A47-500K-S, FS-3	Q11-133	U50 or(UA55L, SF1000)
R3	Bias, Meter	50K	052-109	AB-31, AK-1 or (F1-50K, SS006)	A47-50K-Z, FKS-1/2		UA54A

* Use Metal Housing Switch.

RESISTORS

All wattages 1/2 watt, or less, unless otherwise listed.

ITEM No.	RATING	REPLACEMENT DATA		
		IRC PART No.	WORKMAN PART No.	REMARKS
R4	33K			
R5	22K			
R6	1meg			
R7	4.7meg			
R8	390K			
R9	39K			
R10	100K			
R11	1000Ω			
R12	1meg			
R13	22K			
R14	27K 1W			
R15	100K			
R16	82Ω			
R17	68K			
R18	10K			
R19	1meg			
R20	150K			
R21	82Ω			
R22	68K			
R23	10K			
R24	6.8meg			
R25	91meg 5%			
R26	1meg			

ITEM No.	RATING	REPLACEMENT DATA		
		IRC PART No.	WORKMAN PART No.	REMARKS
R27	470Ω			
R28	270K			
R29	1meg			
R30	470K			
R31	2.2meg			
R32	270K			
R33	470K			
R34	220Ω 2W			
R35	100Ω 2W			
R36	47K			
R37	2200Ω			
R38	6800Ω 1W			
R39	2200Ω 5W	PW5-2200	5W-SQ-2200	
R40	220K			
R41	330Ω 5W	PW5-330	5W-SQ-330	
R42	100Ω 2W			
R43	10Ω 5W	PW5-10	5W-SQ-10	
R44	150Ω 2W			
R45	150Ω 2W			
R46	1meg			
R47	6.8Ω 1W			

COILS (RF-IF)

ITEM No.	USE	REPLACEMENT DATA					NOTES
		GONSET PART No.	Merit PART No.	Miller PART No.	Stancor PART No.	Workman PART No.	
L1	RF Choke (.56uh)	027-077	TV-239	4588	RTC-8513	T958	
L2	Final Tank (2uh)	012-512					
L3	RF Choke (5.6uh)	027-028	BC-565	4609	RTC-8519	T959	
L4	Rec. RF Coil	012-414	TV-118	6171-A	RTC-8609	T216	
L5	Rec. Osc. Coil	012-544		4202			
L6	RF Choke (5.4uh)	027-004	BC-565	4609	RTC-8519	T959	
L7	Rec. Osc. Coil	012-511					
L8	1650K IF	014-032					
L9	455KC IF	014-086	BC-352	12-C1	RTC-8632	T607	
L10	455KC IF	014-086	BC-353	12-C2	RTC-8633	T608	
L11	455KC IF	014-086	BC-353	12-C2	RTC-8633	T608	
L12	RF Choke (5.6uh)	027-028	BC-565	4609	RTC-8519	T959	
L13	Osc. Doubler	012-415	TV-118	4304	RTC-8609	T216	
L14	RF (5.6uh)	027-028	BC-565	4609	RTC-8519	T959	
L15	RF (.47uh)	027-073	TV-239	4588	RTC-8513	T958	
L16	RF (15uh)	027-032		4624	RTC-8524		
L17	Hash Choke	027-010	BC-537	5219	RTC-9181	T963	

COMPONENT COMBINATIONS

ITEM No.	USE	DESCRIPTION	GONSET PART No.	REPLACEMENT DATA
K1	Squelch-AVC Network	.01mfd, (3) 100mmf, (2) 220K, (3) 1meg	069-003	

PARTS LIST AND DESCRIPTION (CONTINUED)

TRANSFORMER (POWER)

ITEM No.	RATING			REPLACEMENT DATA					NOTES
	PRI.	SEC. 1	SEC. 2	GONSET PART No.	MERIT PART No.	STANCOR PART No.	THORDARSON PART No.	TRIAD PART No.	
T1	117VAC @ .68A (or) 12.6VDC @ 5A	115VAC @ .14A DC	12.6VAC @ 1.8A	271-068-F ①					① Part #271-071-C used in Model G-15 (3428)

TRANSFORMER (AUDIO OUTPUT)

ITEM No.	IMPEDANCE		REPLACEMENT DATA					NOTES
	PRI.	SEC.	GONSET PART No.	Merit PART No.	Stancor PART No.	Thordarson PART No.	Triad PART No.	
T2	11K Tap @ 3600Ω	3-4Ω	273-016					

SPEAKER

ITEM No.	TYPE			REPLACEMENT DATA		NOTES
	SIZE	FIELD	V. C. IMP.	GONSET PART No.	QUAM PART No.	
SP1	3"x 5"	PM	3-4Ω	152-023	35A05	

VIBRATOR

ITEM No.	TYPE	INPUT VOLTS	FRE-QUENCY	REPLACEMENT DATA			NOTES
				GONSET PART No.	CORNELL-DUBILIER PART No.	MALLORY PART No.	
M1	Interrupter	12	115∿	117-003	6371	G1601	Model G-15 (3429)
	Interrupter	6	115∿	117-008	5371	1601	Model G-15 (3428)

FUSES

ITEM No.	TYPE	RATING	REPLACEMENT DATA					
			GONSET PART No.		LITTELFUSE PART No.		BUSS PART No.	
			FUSE	HOLDER	FUSE	HOLDER	FUSE	HOLDER
M2	3AG S/B	1A 125V	482-055		313001 (3AG 1A 250V)		MDL 1	
M3	3AG S/B	1A 125V	482-055		313001 (3AG 1A 250V)		MDL 1	
M4	3AG	10A 32A	482-007 ①		311010 (3AG 10A 32V)	155020	AGC 10	HHJ-B
	3AG	20A 32V	482-008 ②		307020 (3AG 20A 32V)	155020	AGC20	HRJ

① 12-Volt Version.
② 6-Volt Version.

MISCELLANEOUS

ITEM No.	PART NAME	GONSET PART No.	NOTES
M5	Tuning Cap.	074-112	1 Gang (2.5-5.3mmf)
M6	Crystal	486-101-R	Receive (Specify Channel & Frequency Desired)
M7	Crystal	486-101-T	Transmit (Specify Channel & Frequency Desired)
M8	Switch	171-134	Crystal, Manual, SPOT (Rotary Wafer Type)
M9	Switch	171-096	Crystal Selector (Rotary Wafer Type)
M10	Relay	111-091	Receive-Transmit (12V)
	Relay	111-090	Receive-Transmit (6V)
M11	Meter	112-040	Signal

WIRING DATA

General-use Hook-up Wire .... Use BELDEN No. 8530 (Solid) Available in 12 Colors
8524 (Stranded) Available in 12 Colors
Shielded Antenna Lead ..... Use BELDEN No. 8214 Lowest Loss (RG-8/U Type)
8237 Low Loss (RG-8/U)
8240 (Solid) Miniature (RG-58/U)
8259 (Stranded) Miniature (RG-58A/U)
Coiled Microphone Cable ..... Use BELDEN No. 8497 3 Conductor- 1 Shielded for Press-to-Talk (Neoprene)
8496 3 Conductor- 1 Shielded for Press-to-Talk (Vinyl)
Ignition Noise Suppression .... Use BELDEN No. 7300-Series Spark-Plug Sets
Bonding Strap ..... Use BELDEN No. 8661 (3/8 in.)

TRADE NAME: Heath Models GW-11A, GWW-11A, GW-11D, GWW-11D

SUPPLIER: Heath Co., A Subsidiary of Daystrom, Inc. Benton Harbor, Michigan

TYPE SET: 8 Tube Transceiver

POWER SUPPLY: 110-120 Volts AC (or) 6 (or) 12 Volt Storage Battery

RATING: 45 Watts, .44A @ 117VAC (Receive)
60 Watts, .58A @ 117VAC (Transmit)
3.0A @ 12.6VDC (Receive)
3.7A @ 12.6VDC (Transmit)

TUNING RANGE: TRANSMITTER: Any 3 of CB Channels 1 thru 23
RECEIVER: Any one Crystal Controlled channel or continuously variable.

ALIGNMENT INSTRUCTIONS

ALIGNMENT INSTRUCTIONS—READ CAREFULLY BEFORE ATTEMPTING ALIGNMENT

Suggested Alignment Tools:
A1 thru A4, A6 thru A11... GENERAL CEMENT #8282, 8606, 9295..... WALSCO #2526, 2545, 2544
A5..... GENERAL CEMENT #5004, 5009, 8195..... WALSCO #8989, 9291

RECEIVER ALIGNMENT

	SIGNAL GENERATOR	CHANNEL	ADJUST	REMARKS
1.	High side to antenna terminal, common to ground. Tune to 455KC (Unmod.)		A1, A2, A3, A4	Connect DC probe VTVM to pin 6 of V4, common to ground. Adjust for maximum deflection.
2.	High side to antenna terminal, common to ground. Tune to channel frequency.	23 (27.255MC)	A5	Crystal-Variable switch in variable position. Adjust for maximum deflection.
3.	"	1 (26.965MC)	A6	Check for receiver tracking at this point. If sharp rise in VTVM indication is found as receiver is tuned to channel 1, no adjustment of A6 is needed. When adjustment of A6 is necessary, return to step 2 and check high channel tracking.
4.	"	12	A7	Adjust for maximum output.
5.	Not Used.		A8	Crystal-Variable switch in crystal position. Connect DC probe of VTVM to pin 9 of V1, common to ground. Rock A8 to each side of peak noting rate of dropoff. Set A8 just below peak on side of gradual dropoff.

TRANSMITTER ALIGNMENT

ONLY THOSE PERSONS PROPERLY LICENSED ARE PERMITTED TO MAKE REPAIRS OR ADJUSTMENTS WHICH MAY RESULT IN ILLEGAL OPERATION. (REFER TO FCC RULES & REGULATIONS PART 19, SUBPART D, SECTION 19.71)

	SPECIAL INSTRUCTIONS	INDICATOR	ADJUST	REMARKS
1.	Place crystal selector switch on or near the centermost channel as covered by the unit.	Connect dummy load and RF wattmeter to antenna terminal. Tuning meter on front panel may be used as output indicator if RF Wattmeter is not available.	A9	Key Transmitter. Rock A9 to each side of peak noting rate of dropoff: Set A9 just below peak on side of gradual dropoff.
2.	"	"	A10, A11	Adjust for maximum output.

HOWARD W. SAMS & CO., INC. Indianapolis 6, Indiana

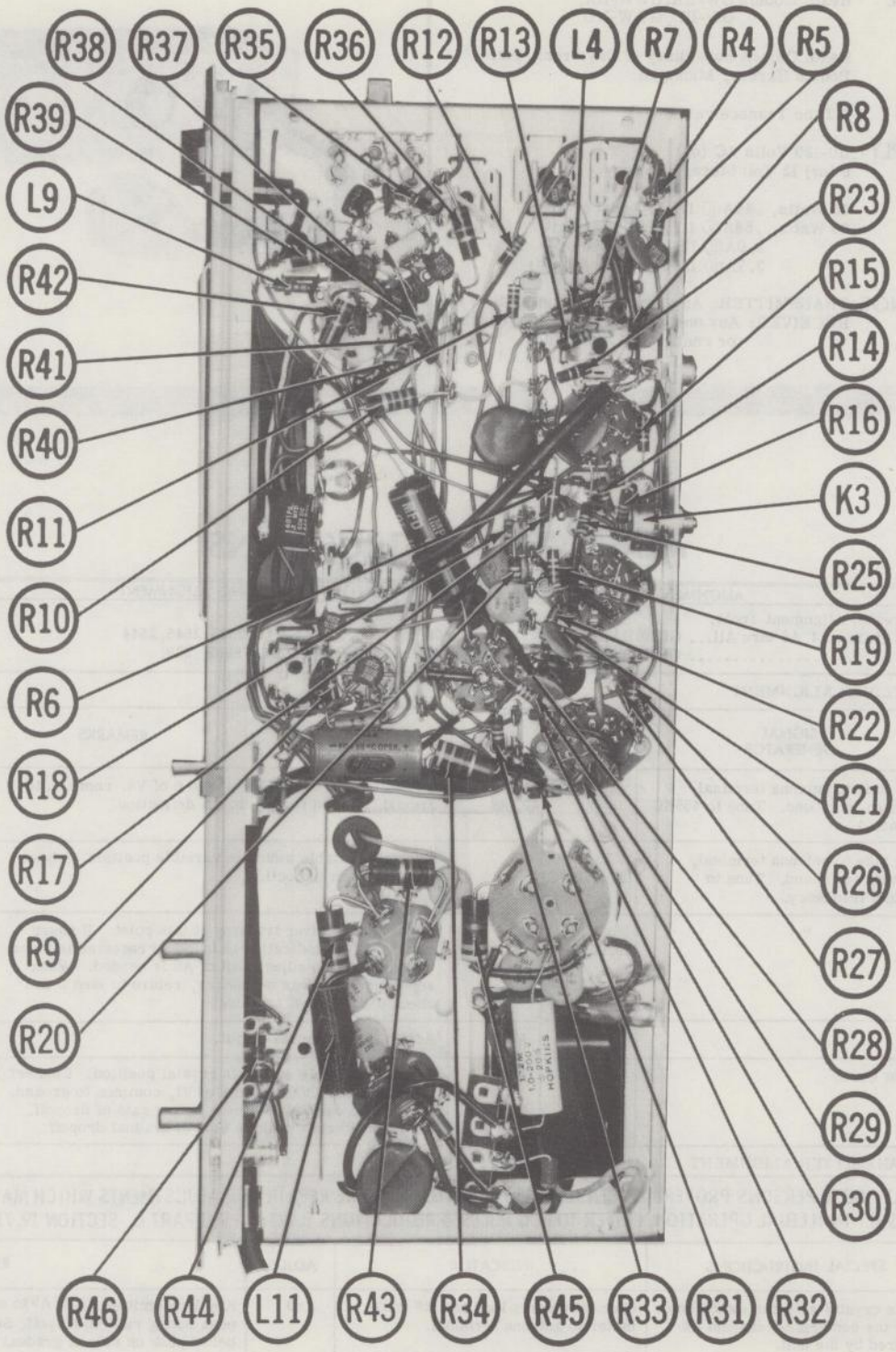

CHASSIS BOTTOM VIEW — RESISTOR & INDUCTOR IDENT. (DC POWER)

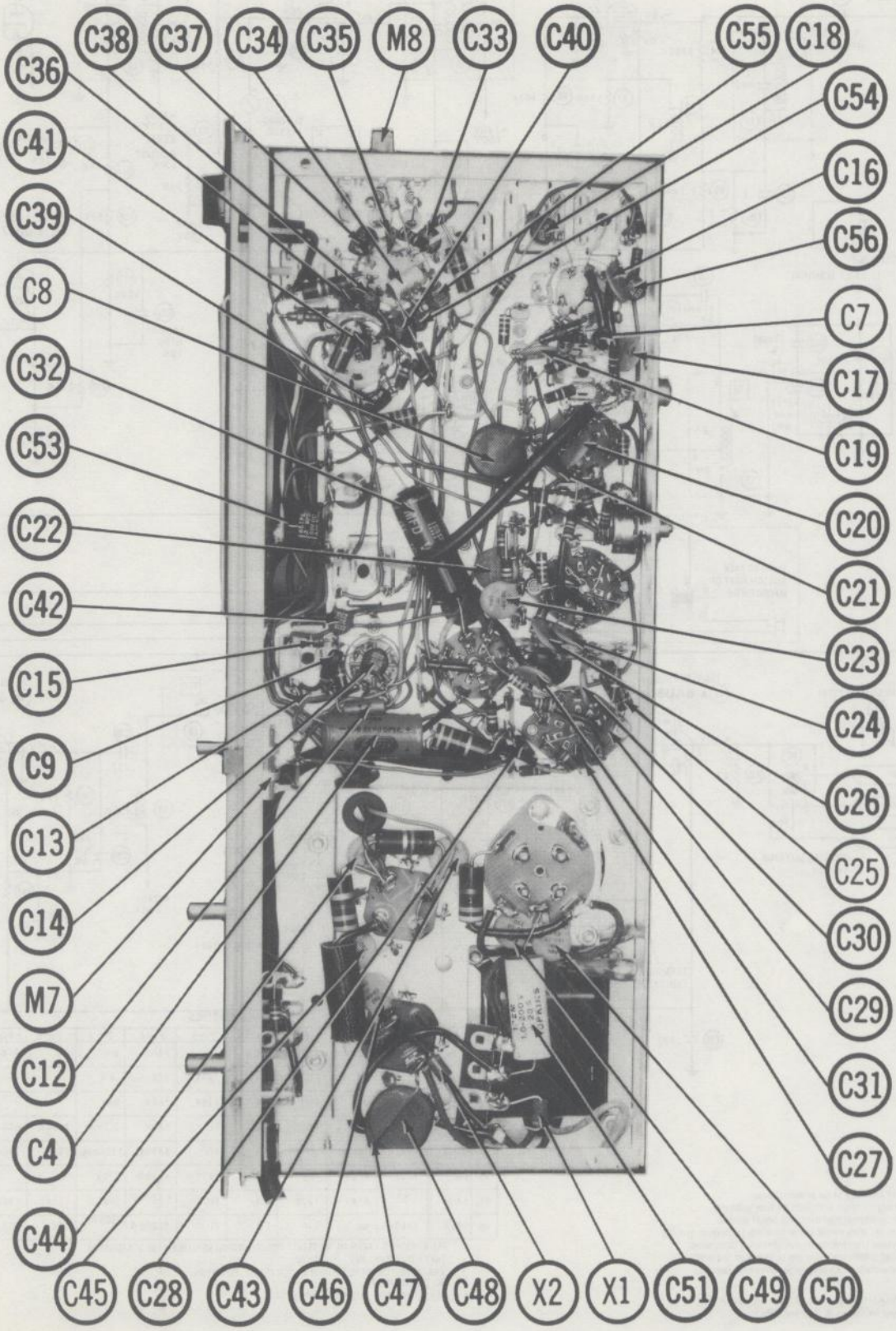

CHASSIS BOTTOM VIEW — CAPACITOR & MISC. IDENT. (DC POWER)

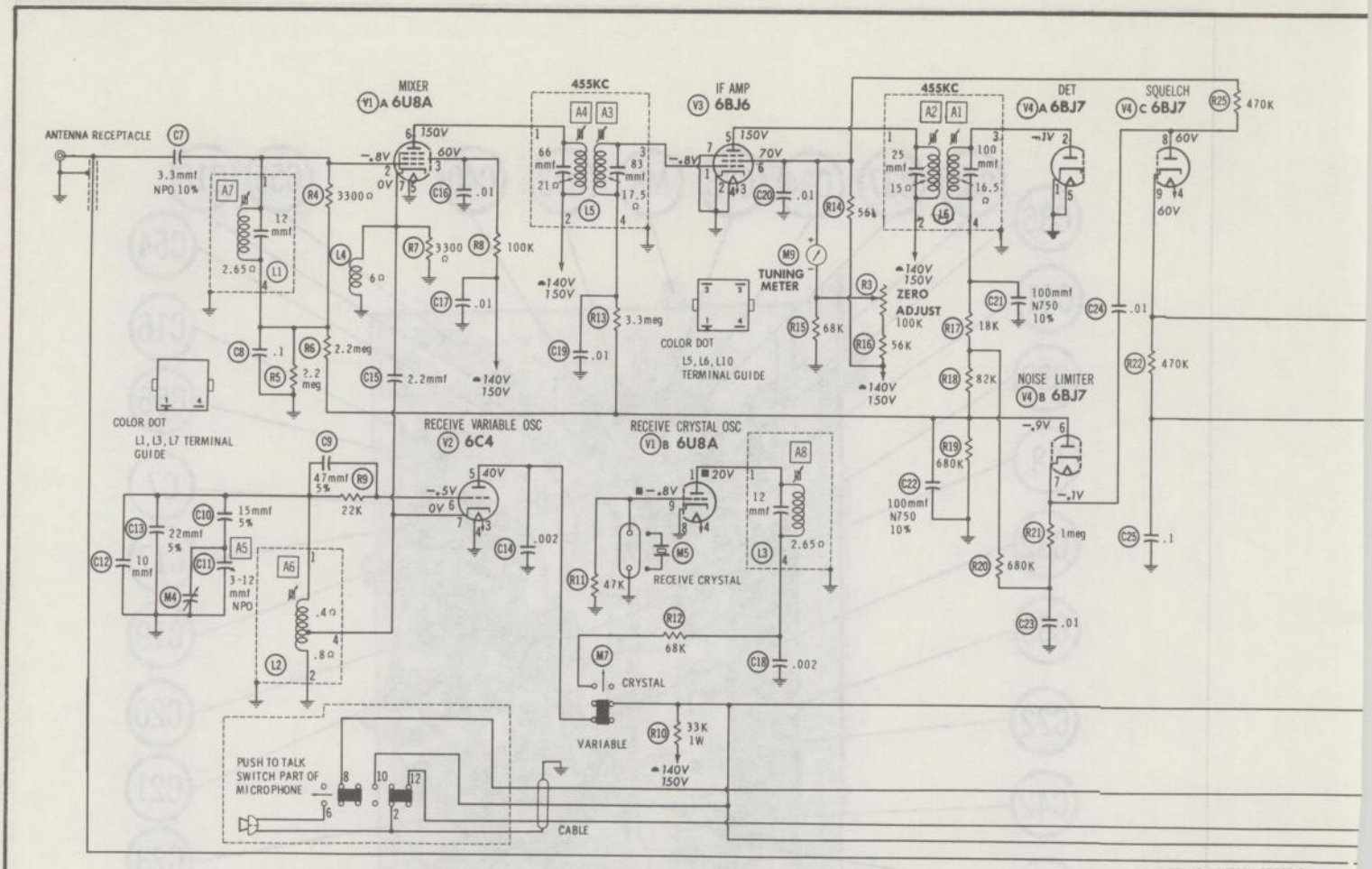

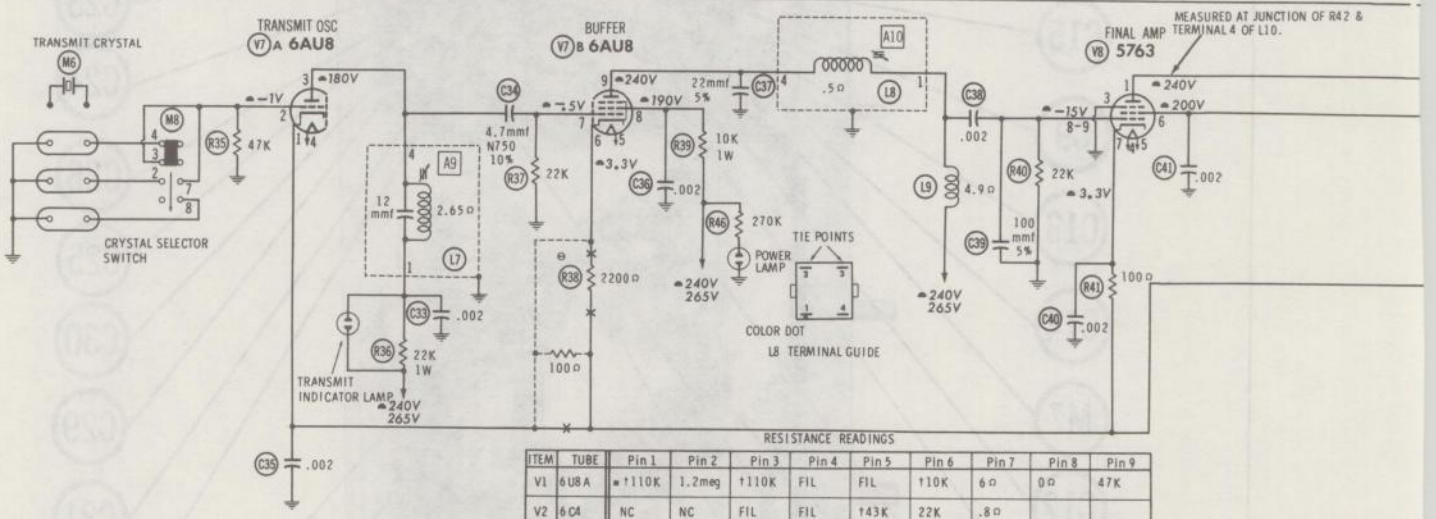

RESISTANCE READINGS

ITEM	TUBE	Pin 1	Pin 2	Pin 3	Pin 4	Pin 5	Pin 6	Pin 7	Pin 8	Pin 9
V1	6U8A	■ †110K	1.2meg	†110K	FIL	FIL	†10K	6Ω	0Ω	47K
V2	6C4	NC	NC	FIL	FIL	†43K	22K	.8Ω		
V3	6BJ6	4meg	0Ω	FIL	FIL	†10K	†60K	0Ω		
V4	6BJ7	0Ω	750K	NC	FIL	FIL	680K	2.5meg	†535K	600K
V5	6AN8	†480K	10meg	▪ 22K	FIL	FIL	†330K	†1.5meg	500K	1500Ω
V6	6AQ5A	270K	470Ω	FIL	FIL	†810Ω	†330Ω	270K		
V7	6AU8	▪ 0Ω	47K	†22K	FIL	FIL	▪ 2200Ω	22K	†10K	†350Ω
V8	5763	†380Ω	NC	0Ω	FIL	FIL	†5000Ω	▪ 100Ω	22K	22K

ALL READINGS TAKEN IN "RECEIVE" POSITION UNLESS OTHERWISE DESIGNATED.
▪ TAKEN IN "TRANSMIT" POSITION.
■ VARIABLE - CRYSTAL SWITCH IN "CRYSTAL" POSITION.
NC NO CONNECTION
† MEASURED FROM OUTPUT OF X2 OR X4.

⊖ See parts list for alternate value or application.
1. Voltage measurements taken with vacuum tube voltmeter.
2. All controls set for normal operation, no signal applied.
3. Measured values are from socket pin or terminal to common ground.
4. All terminals viewed from bottom unless otherwise designated.
5. Numbers assigned to terminals may not be found on the unit.
6. Supply voltage maintained at rated value for voltage readings.

A PHOTOFACT STANDARD NOTATION SCHEMATIC

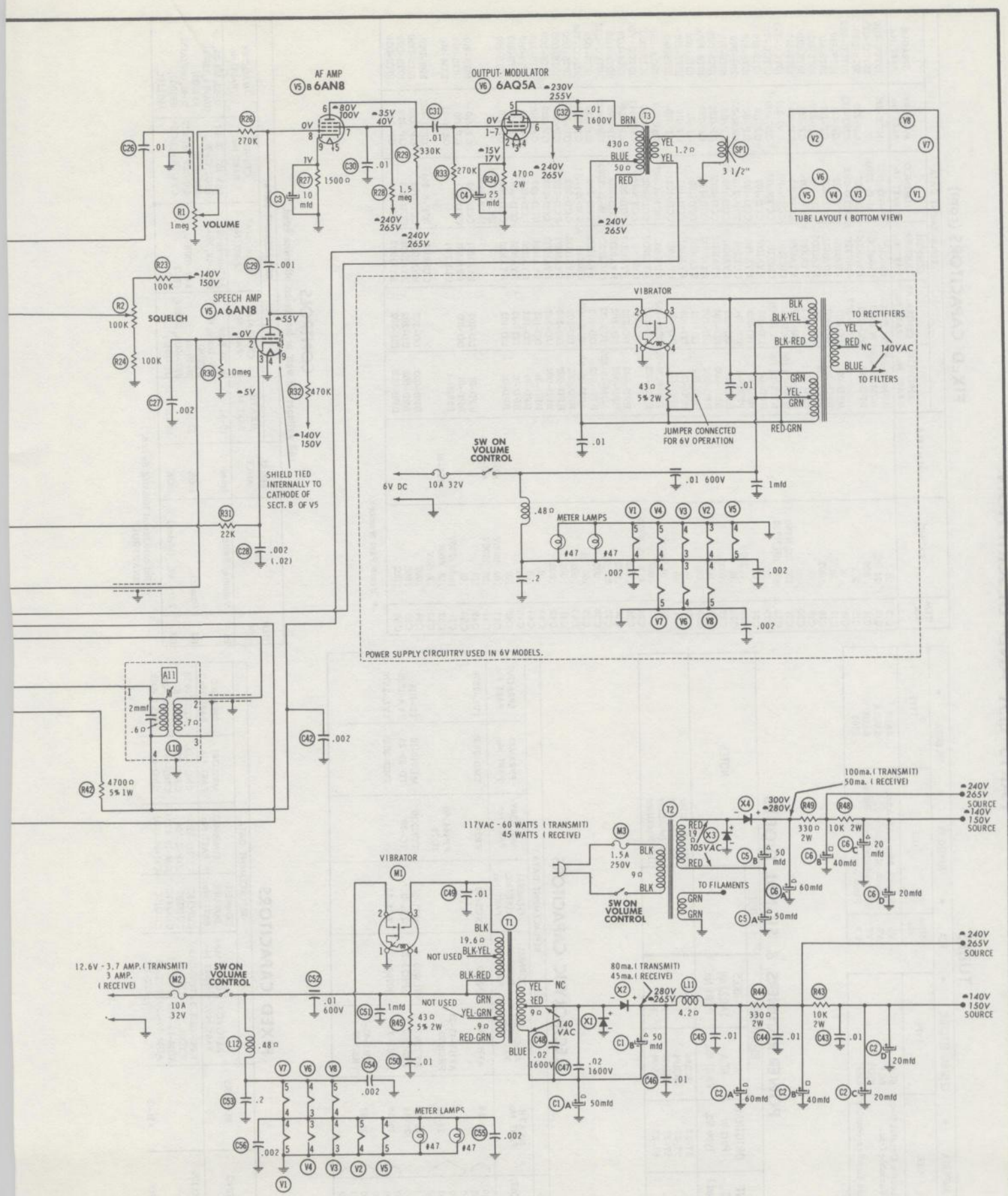
AF AMP
V5 B 6AN8
OUTPUT- MODULATOR
V6 6AQ5A
SPEECH AMP
V5 A 6AN8
SQUELCH
VOLUME
TUBE LAYOUT (BOTTOM VIEW)
VIBRATOR
TO RECTIFIERS
140VAC
TO FILTERS
JUMPER CONNECTED FOR 6V OPERATION
SW ON VOLUME CONTROL
6V DC
10A 32V
METER LAMPS
POWER SUPPLY CIRCUITRY USED IN 6V MODELS.
SHIELD TIED INTERNALLY TO CATHODE OF SECT. B OF V5
117VAC - 60 WATTS (TRANSMIT)
45 WATTS (RECEIVE)
100ma. (TRANSMIT)
50ma. (RECEIVE)
TO FILAMENTS
12.6V - 3.7 AMP. (TRANSMIT)
3 AMP.
(RECEIVE)
NOT USED
80ma. (TRANSMIT)
45ma. (RECEIVE)
240V 265V SOURCE
140V 150V SOURCE

PARTS LIST AND DESCRIPTION

TUBES

◆ AMPEREX ◆ GENERAL ELECTRIC ◆ RCA ◆ RAYTHEON ◆ SYLVANIA ◆

ITEM No.	USE	TYPE
V1	Mixer--Receive Crystal Osc.	6U8A
V2	Receive Variable Osc.	6C4
V3	IF Amp.	6BJ6
V4	Det.--Noise Limiter--Squelch	6BJ7
V5	Speech Amp.--AF Amp.	6AU8
V6	Output--Modulator	6AQ5A
V7	Transmitter Osc.--Buffer	6AU8
V8	Final Amp.	5763

POWER RECTIFIERS & SIGNAL DIODES

ITEM No.	CURRENT RATING (Measured)	ORIGINAL Part or Type No.	RECTIFIERS RCA PART No.	RECTIFIERS SARKES TARZIAN PART No.	DIODES	NOTES
X1	.080A	57-27	1N3194	F4		HV Rectifier
X2	.080A	57-27	1N3194	F4		HV Rectifier
X3	.100A	57-27	1N3194	F4		HV Rectifier
X4	.100A	57-27	1N3194	F4		HV Rectifier

ELECTROLYTIC CAPACITORS

ITEM No.	RATING CAP.	RATING VOLT.	HEATH PART No.	AEROVOX PART No.	CORNELL-DUBILIER PART No.	GENERAL ELECTRIC PART No.	MALLORY PART No.	PYRAMID PART No.	SPRAGUE PART No.
C1A	▲50	200	25-58	AFH2-33	B0260	XC2-33	FP240	TMD-2655	TVL-2576
B	▲50	200							
C2A	▲60	450	25-93	AFH3-45-25 PRS1570			FP444.95 TC78		
B	■40	350							
C	▲20	350							
D	20	250							
C3	10	10	25-54	PTT39	NLW10-15	MT1-5	TT12X10	MLV10-10	TE-1114
C4	25	25	25-44	PRS1260	BBR25-25	QT1-11	TC-26	TD-25-25	TVA-1205
C5A	▲50	200	25-58	AFH2-33	B0260	XC2-33		TMD-2655	TVL-2576
B	▲50	200							
C6A	▲60	450	25-93	AFH3-45-25 PRS1570					
B	■40	350							
C	▲20	350							
D	20	250							

FIXED CAPACITORS

ITEM No.	RATING	REMARKS	AEROVOX PART No.	CENTRALAB PART No.	CORNELL-DUBILIER PART No.	ELMENCO PART No.	MALLORY PART No.	SPRAGUE PART No.
C7	3.3 NPO 10%		NPO-DI 3.3	TCZ-3R3	C10V33C	CCTO-3R3	CNO-533	10TCC-V33
C8	.1 50V		TTD-1	CK-104	CUB2P1	IDP-2-104	GEM-201	2PS-P10
C9	47 5%		ADM-15-470	TCZ-47	C10Q47C	CM-15-470J	CNO-447	10TCC-Q47
C10	15 5%		ADM-15-150	TCZ-15	C10Q15C	CM-15-150J	CNO-415	10TCC-Q15
C11	3-12 NPO	#31-13		822-BZ				

FIXED CAPACITORS (cont)

ITEM No.	RATING	REMARKS	AEROVOX PART No.	CENTRALAB PART No.	CORNELL-DUBILIER PART No.	ELMENCO PART No.	MALLORY PART No.	SPRAGUE PART No.
C12	10		ADM-15-100	TCZ-10	C10Q1C	CM-15-100J	MCE-215	10TCC-Q10
C13	22 5%		ADM-15-200	TCZ-22	C10Q22C	CM-15-220J		10TCC-Q22
C14	.002		BPD-002	DD-202	BYA10D2	CCD-202	GP-220	10TS-D20
C15	2.2			TCZ-2R2	C10V22C	CCTO-2R2	CNO-522	10TCC-V22
C16	.01		BPD-01	DD-103	BYA10S1	CCD-103	GP-110	10TS-S10
C17	.01		BPD-01	DD-103	BYA10S1	CCD-103	GP-110	10TS-S10
C18	.002		BPD-002	DD-202	BYA10D2	CCD-202	GP-220	10TS-D20
C19	.01		BPD-01	DD-103	BYA10S1	CCD-103	GP-110	10TS-S10
C20	.01		BPD-01	DD-103	BYA10S1	CCD-103	GP-110	10TS-S10
C21	100 10% N750		N750-DI 100	TCN-100	C10T1U	CCTN-101	CN7-310	10TCU-T10
C22	100 10% N750		N750-DI 100	TCN-100	C10T1U	CCTN-101	CN7-310	10TCU-T10
C23	.01		BPD-01	DD-103	BYA10S1	CCD-103	GP-110	10TS-S10
C24	.01		BPD-01	DD-103	BYA10S1	CCD-103	GP-110	10TS-S10
C25	.1 200V		P288N-1	DF-104	CUB2P1	2DP-2-104	GEM-201	2PS-P10
C26	.01		BPD-01	DD-103	BYA10S1	CCD-103	GP-110	10TS-S10
C27	.002		BPD-002	DD-202	BYA10D2	CCD-202	GP-220	10TS-D20
C28	.002		BPD-002	DD-202	BYA10D2	CCD-202	GP-220	10TS-D20
C29	.001		BPD-001	DD-102	BYA10D1	CCD-102	GP-210	10TS-D10
C30	.01		BPD-01	DD-103	BYA10S1	CCD-103	GP-110	10TS-S10
C31	.01		BPD-01	DD-103	BYA10S1	CCD-103	GP-110	10TS-S10
C32	.01 1600V		P1684CM-01	DD16-103	CUB16S1	16CP-4-103	2HV-110	30GA-S10
C33	.002		BPD-002	DD-202	BYA10D2	CCD-202	GP-220	10TS-D20
C34	4.7 10% N750			TCN-5	C10V5U	CCTN-050	CN7-547	10TCU-V50
C35	.002		BPD-002	DD-202	BYA10D2	CCD-202	GP-220	10TS-D20
C36	.002		BPD-002	DD-202	BYA10D2	CCD-202	GP-220	10TS-D20
C37	22 5%		ADM-15-220	TCZ-22	C10Q22C	CM-15-220J	CNO-422	10TCC-Q22
C38	.002		BPD-002	DD-202	BYA10D2	CCD-202	GP-220	10TS-D20
C39	100 5%		ADM-15-101	TCZ-100	C10T1U	CM-15-101J	CNO-310	10TCC-T10
C40	.002		BPD-002	DD-202	BYA10D2	CCD-202	GP-220	10TS-D20
C41	.002		BPD-002	DD-202	BYA10D2	CCD-202	GP-220	10TS-D20
C42	.002		BPD-002	DD-202	BYA10D2	CCD-202	GP-220	10TS-D20
C43	.01		BPD-01	DD-103	BYA10S1	CCD-103	GP-110	10TS-S10
C44	.01		BPD-01	DD-103	BYA10S1	CCD-103	GP-110	10TS-S10
C45	.01		BPD-01	DD-103	BYA10S1	CCD-103	GP-110	10TS-S10
C46	.01		BPD-01	DD-103	BYA10S1	CCD-103	GP-110	10TS-S10
C47	.02 1600V	#21-38				16CP-5-203		
C48	.02 1600V	#21-38				16CP-5-203		
C49	.01		BPD-01	DD-103	BYA10S1	CCD-103	GP-110	10TS-S10
C50	.01		BPD-01	DD-103	BYA10S1	CCD-103	GP-110	10TS-S10
C51	1mfd 200V		P288N-1		CUB2W1		GEM-21	2TM-M1
C52	.01 600V	#23-81						
C53	.2 50V				CUB6P2	2CP-5-204	GEM-402	2PS-P20
C54	.002		BPD-002	DD-202	BYA10D2	CCD-202	GP-220	10TS-D20
C55	.002		BPD-002	DD-202	BYA10D2	CCD-202	GP-220	10TS-D20
C56	.002		BPD-002	DD-202	BYA10D2	CCD-202	GP-220	10TS-D20

Heath Part Number.

CONTROLS

All wattages 1/2 watt, or less, unless otherwise listed.

ITEM No.	USE	RESISTANCE	HEATH PART No.	CENTRALAB PART No.	CLAROSTAT PART No.	CTS-IRC PART No.	MALLORY PART No.
R1	Volume, Switch	1meg	19-53	B-70-S or (F2-1meg, KR-1, SU204)	A47-1meg-Z, SWE-12, FS-3	Q13-137, 76-1 † (BU2, CF26, SS1, GC)*	U-53, US-26, or (UA16A, US-41, SF1000)
R2	Squelch	100K	10-108	B-40 or (F1-100K, SU204)	A47-100K-S, FS-3	Q11-128, or (BU2, CF13, SS1, DC)*	U-41, or (UA15L, SF1000)
R3	Zero Adj. (Meter)	100K	10-121	JL-104			MCL15L

† Indicate Metal Housing Switch.
* "SNAPTROL"

PARTS LIST AND DESCRIPTION (CONTINUED)

COILS (RF-IF)

ITEM No.	USE	REPLACEMENT DATA HEATH PART No.	MERIT PART No.	MILLER PART No.	STANCOR PART No.	WORKMAN PART No.	NOTES
L1	Antenna	40-312					
L2	Oscillator	40-313					
L3	Oscillator Plate (Receive)	40-312					
L4	RF Choke (Mixer Cathode)	45-27		72F275AP			30uh
L5	Input IF	52-38					
L6	Output IF	52-39					
L7	Oscillator Plate (Transmitter)	40-312					
L8	RF Choke (Driver Plate)	40-431					130uh 30uh
L9	RF Choke	45-27					
L10	Final RF	40-432					90uh
L11	RF Choke	45-7		6177			235MH
L12	Hash Filter	45-20					

TRANSFORMER (POWER)

ITEM No.	RATING PRI.	SEC. 1	SEC. 2	REPLACEMENT DATA HEATH PART No.	MERIT PART No.	STANCOR PART No.	THORDARSON PART No.	TRIAD PART No.	NOTES
T1	12.6VDC @ 1.4A (2.1A)*	140V @ .080A		55-8					* Transmit

TRANSFORMER (POWER)

ITEM No.	RATING PRI.	SEC. 1	SEC. 2	REPLACEMENT DATA HEATH PART No.	MERIT PART No.	STANCOR PART No.	THORDARSON PART No.	TRIAD PART No.	NOTES
T2	117VAC @ .44A (.58A)*	105V @ .05A	6.3V @ 3.6A	54-124					* Transmit

TRANSFORMER (AUDIO OUTPUT)

ITEM No.	IMPEDANCE PRI.	SEC.	REPLACEMENT DATA HEATH PART No.	Merit PART No.	Stancor PART No.	Thordarson PART No.	Triad PART No.	NOTES
T3	5800Ω Tap @ 4900Ω	3-4Ω	51-65					

SPEAKER

ITEM No.	TYPE SIZE	FIELD	V. C. IMP.	REPLACEMENT DATA HEATH PART No.	QUAM PART No.	NOTES
SP1	3½"	PM	3-4Ω	401-21	3A07	

VIBRATOR

ITEM No.	TYPE	INPUT VOLTS	FRE-QUENCY	REPLACEMENT DATA HEATH PART No.	CORNELL-DUBILIER PART No.	MALLORY PART No.	NOTES
M1	Interruptor	6		68-5		1610	

FUSES

ITEM No.	TYPE	RATING	REPLACEMENT DATA HEATH PART No. FUSE	HEATH PART No. HOLDER	LITTELFUSE PART No. FUSE	LITTELFUSE PART No. HOLDER	BUSS PART No. FUSE	BUSS PART No. HOLDER
M2	3AG	10A 32V	421-30	423-6	311010 (3AG 10A 32V)	155020	AGC10	HHJ-B
M3	3AG	1½A 250V	421-1	422-1	31201.5 (3AG 1½A 250V)	357001	AGC 1½	4405

MISCELLANEOUS

ITEM No.	PART NAME	HEATH PART No.	NOTES
M4	Tuning Cap.	26-66	1 Gang (5.9mmf)
M5	Crystal		Receive (Part numbers are consecutive from 404-44 for channel 1 to 404-66 for channel 23)
M6	Crystal		Transmit (Part numbers are consecutive from 404-14 for channel 1 to 404-36 for channel 23)
M7	Switch	60-4	Rec. Crystal-Variable (DPST Slide Type)
M8	Switch	60-10	Transmit Crystal Selector (3-Position Slide Type)
M9	Meter	407-82	Signal
	Microphone	480-29	

CABINETS & CABINET PARTS

(When Ordering Cabinets & Cabinet Parts, Specify Model, Chassis & Color)

NAME	PART NO.	DESCRIPTION
Dial Pointer	100-M270	
Knob	462-78	Squelch, Volume, Tuning
Cabinet	90-M131F	

WIRING DATA

General-use Unshielded Hook-up Wire ..... Use BELDEN No. 8530 (Solid) Available in 12 Colors
8524 (Stranded) Available in 12 Colors

Power Cord ..... Use BELDEN No. 17106 (Plastic) or 17126 (Rubber) - 6 Ft.
17109 (Plastic) or 17129 (Rubber) - 9 Ft.

Power Cord (Interlock Type) ..... Use BELDEN No. 8874 (Rubber) or 8895 (Plastic)

CHASSIS
BOTTOM
VIEW
(AC POWER)

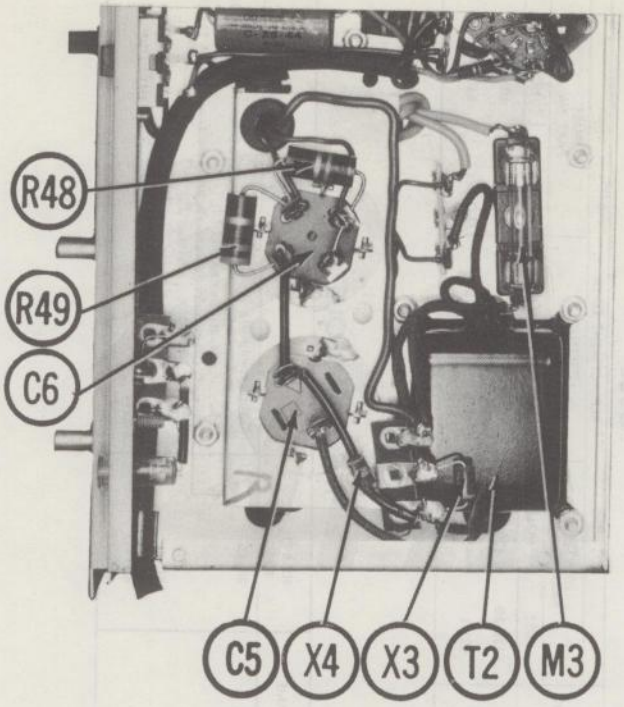

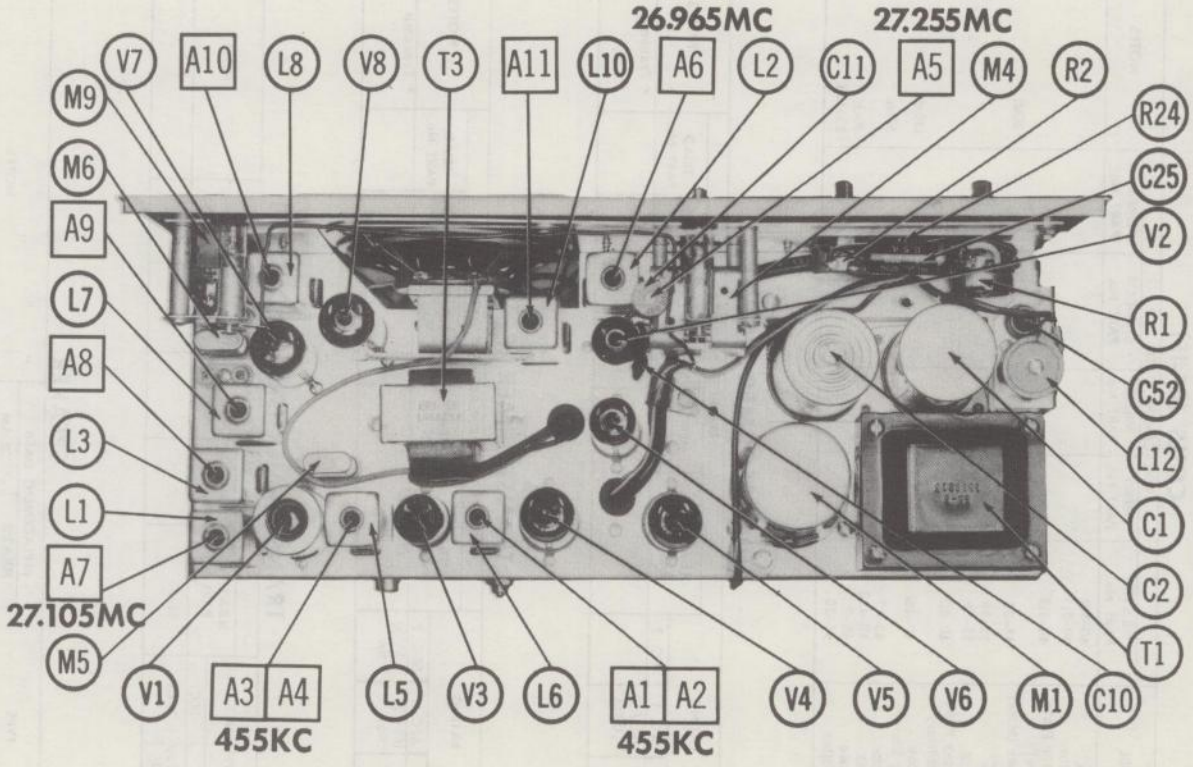

CHASSIS – TOP VIEW

TRADE NAME: Heath Models GW-21, GWW-21

SUPPLIER: Heath Co., A Subsidiary of Daystrom, Inc.
Benton Harbor, Michigan

TYPE SET: 9 Transistor Single Channel Transceiver

POWER SUPPLY: 9 Volts DC

RATING: 14MA @ 9VDC (Receive)
40MA @ 9VDC (Transmit)

TUNING RANGE: Any one of Channel 1 thru 23

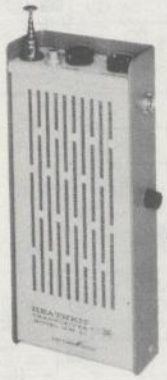

ALIGNMENT INSTRUCTIONS

Volume control should be at maximum position. Output of signal generator should be no higher than necessary to obtain an output reading.
Suggested Alignment Tools: A1, A2, A3.....GENERAL CEMENT #8195, 8274, 5066..WALSCO #2515, 2531, 2532
A4, A5, A6, A7....GENERAL CEMENT #8282, 8606, 9295..WALSCO #2526, 2543, 2544

RECEIVER ALIGNMENT

Connect output meter across voice coil.
Set Volume and Squelch controls for maximum output.

	SIGNAL GENERATOR	CHANNEL	ADJUST	REMARKS
1.	High side to antenna terminal, common to ground. Tune to 455KC (400~ Mod.)		A1, A2, A3	Adjust for maximum.
2.	Same as step 1. Set generator output frequency to correspond to transmitter crystal frequency.		A4, A5	Adjust for maximum.

TRANSMITTER ALIGNMENT

ONLY THOSE PERSONS PROPERLY LICENSED ARE PERMITTED TO MAKE REPAIRS OR ADJUSTMENTS WHICH MAY RESULT IN ILLEGAL OPERATION. (REFER TO FCC RULES & REGULATIONS PART 19, SUBPART D, SECTION 19.71)

	SPECIAL INSTRUCTIONS	INDICATOR	ADJUST	REMARKS
1.	Maintain supply voltage at 9 volts. Connect dummy load or antenna.	RF Wattmeter or Field Strength Meter.	A6, A7	Key Transmitter. Adjust for maximum indication. Slight readjustment of A7 may be necessary when antenna is reconnected and extended to its full length.

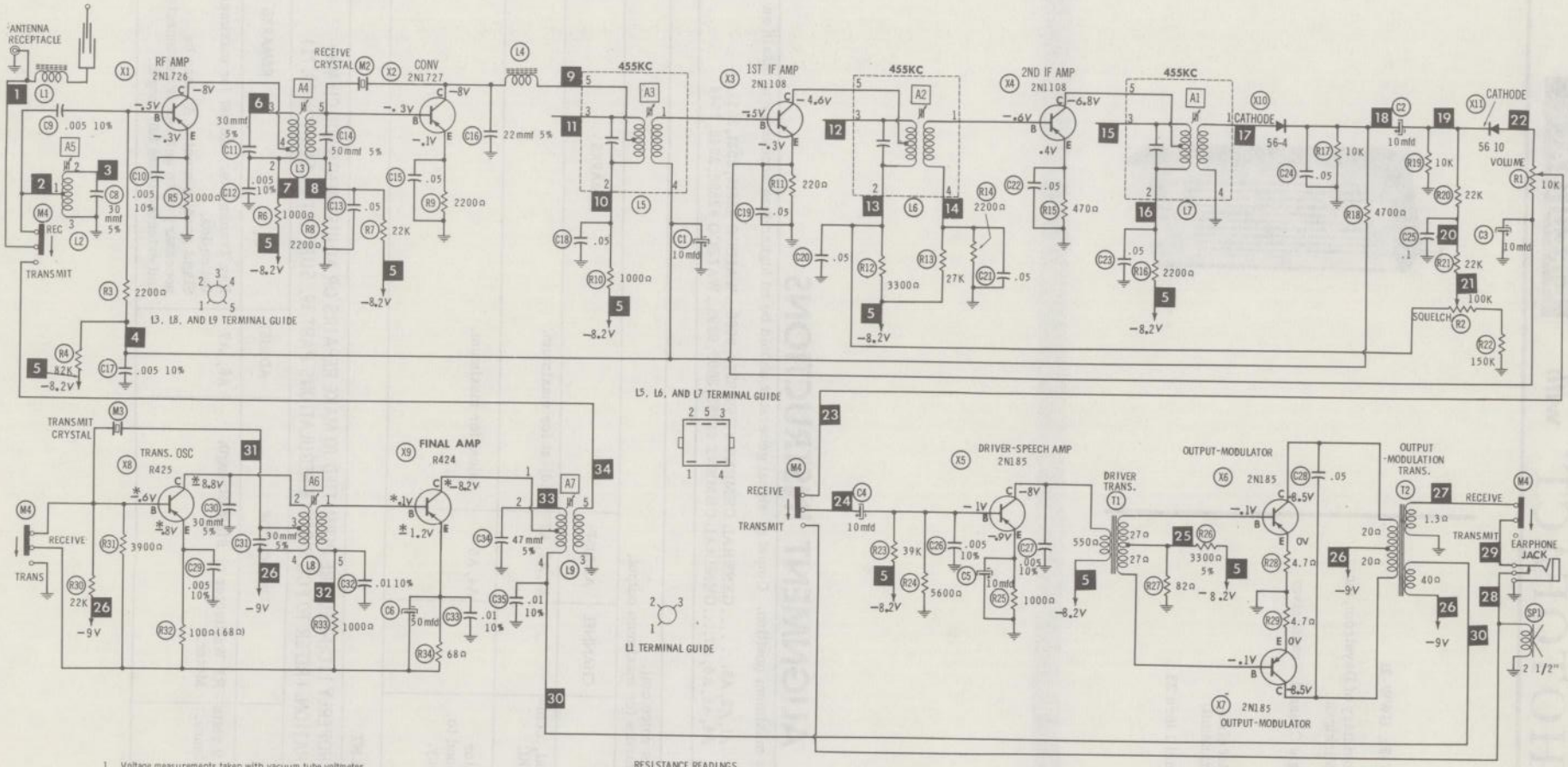

1. Voltage measurements taken with vacuum tube voltmeter.
2. All controls set for normal operation, no signal applied.
3. Measured values are from socket pin or terminal to common ground.
4. All terminals viewed from bottom unless otherwise designated.
5. Numbers assigned to terminals may not be found on the unit.
6. Supply voltage maintained at rated value for voltage readings.

RESISTANCE READINGS

ITEM	TYPE	BASE	EMITTER	COLLECTOR
X1	2N1726	10K	1000Ω	†1150Ω
X2	2N1726	2200Ω	2200Ω	†1300Ω
X3	2N1108	7500Ω	220Ω	†3500Ω
X4	2N1108	2200Ω	470Ω	†2400Ω
X5	2N185	5600Ω	1000Ω	†740Ω
X6	2N185	100Ω	4.7Ω	†15Ω
X7	2N185	100Ω	4.7Ω	†15Ω
X8	R425	*3900Ω	*100Ω	*†.3Ω
X9	R424	*1150Ω	*68Ω	*†38Ω

ALL MEASUREMENTS TAKEN IN RECEIVE POSITION UNLESS OTHERWISE DESIGNATED.
* TAKEN IN TRANSMIT POSITION.
† MEASURED FROM – TERMINAL ON BATTERY.

RECEIVE-TRANSMIT SWITCH SHOWN IN RECEIVE POSITION

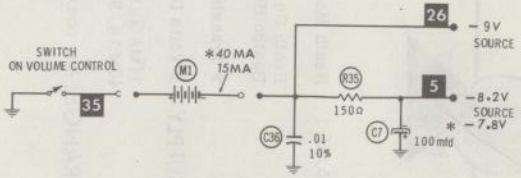

A PHOTOFACT STANDARD NOTATION SCHEMATIC with CIRCUITRACE

HEATH MODELS GW-21, GWW-21

HEATH MODELS GW-21, GWW-21

A Howard W. Sams CIRCUITRACE® Photo

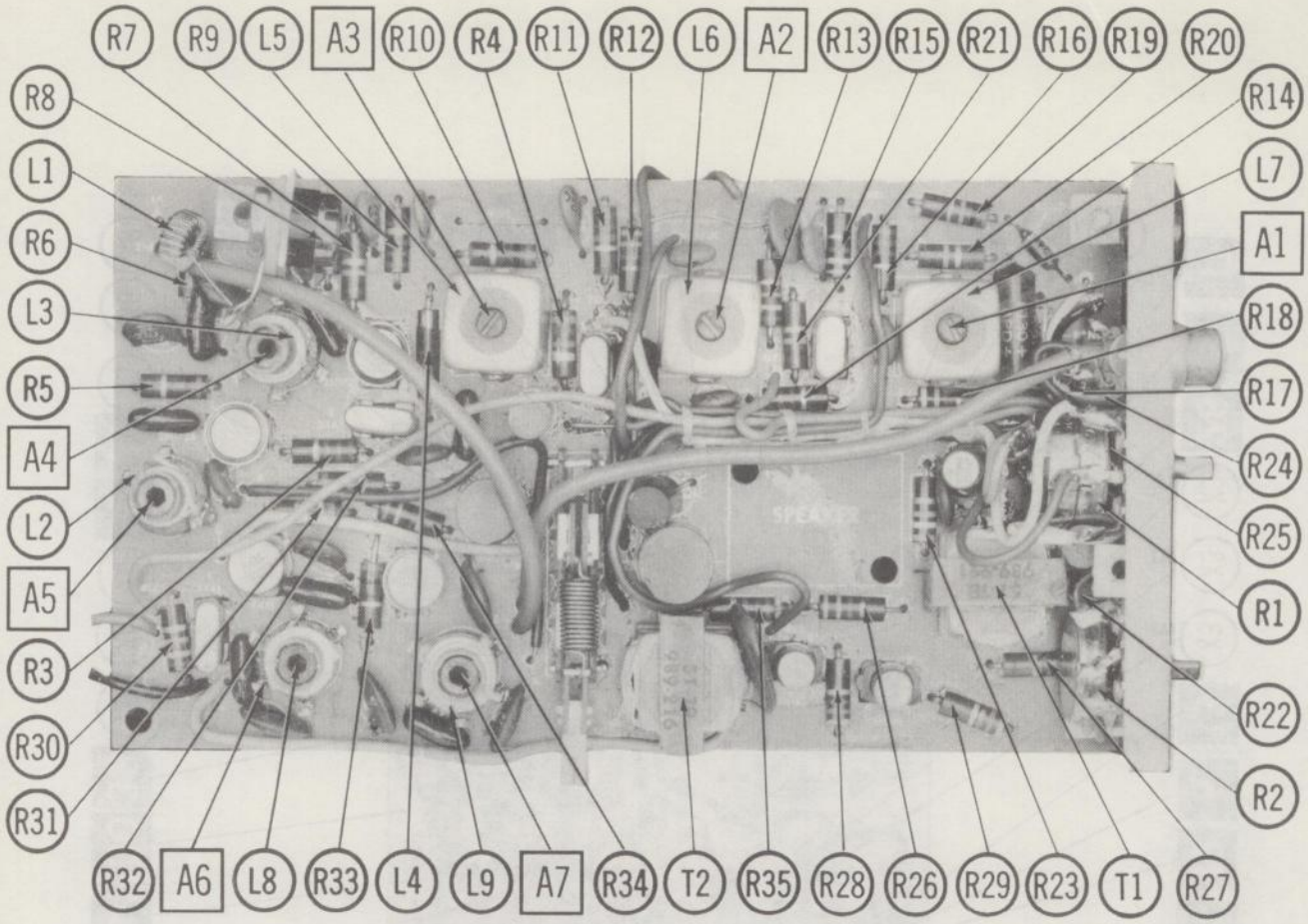
R7
R9
L5
A3
R10
R4
R11
R12
L6
A2
R13
R15
R21
R16
R19
R20
R8
L1
R6
L3
R5
A4
L2
A5
R3
R30
R31
R14
L7
A1
R18
R17
R24
R25
R1
R22
R2
R32
A6
L8
R33
L4
L9
A7
R34
T2
R35
R28
R26
R29
R23
T1
R27

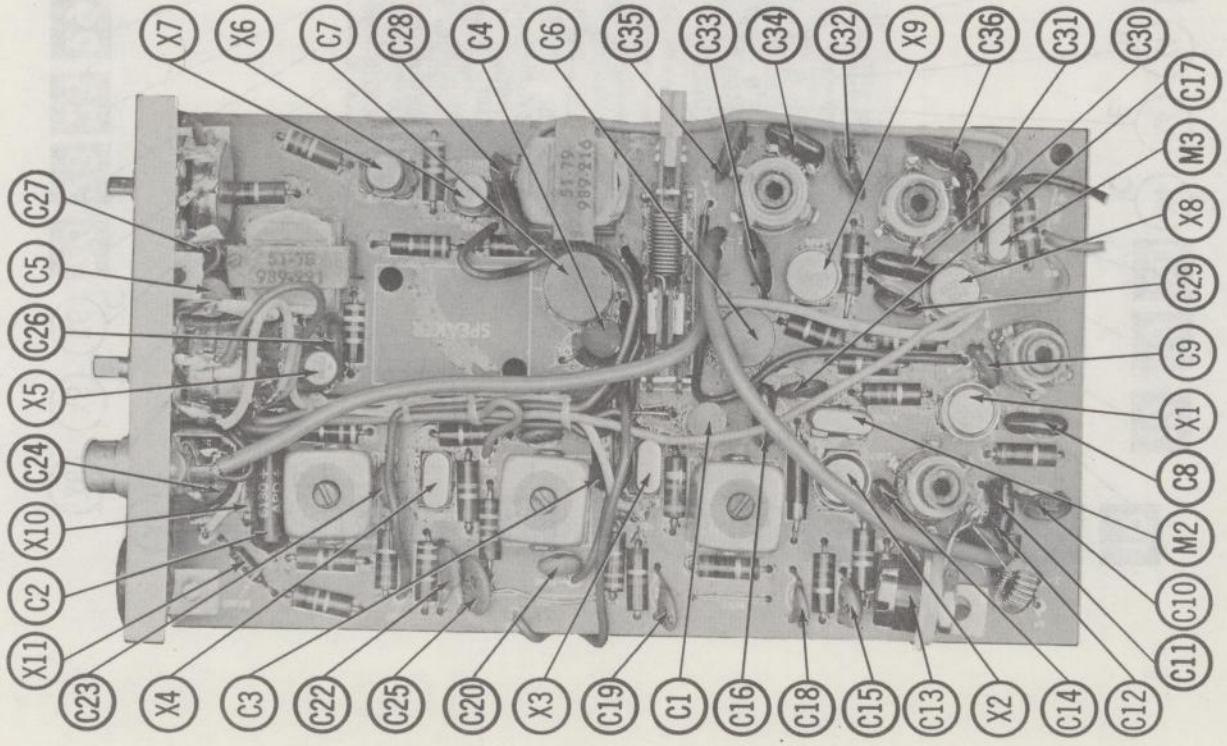
X7
X6
C7
C28
C4
C6
C35
C33
C34
C32
X9
C36
C31
C30
C27
C5
C26
X5
C24
X10
C2
X11
C23
X4
C3
C22
C25
C20
X3
C19
C1
C16
C18
C15
C13
X2
C14
C12
C17
M3
X8
C29
C9
X1
C8
M2
C10
C11

PARTS LIST AND DESCRIPTION

TRANSISTORS

ITEM No.	ORIG. TYPE	USE	REPLACEMENT DATA			NOTES
			DELCO PART No.	GENERAL ELECTRIC PART No.	RCA PART No.	
X1	2N1726	RF Amplifier	DS34	GE-1		PNP
X2	2N1727	Converter	DS34	GE-1		PNP
X3	2N1108	1st IF Amp.	DS25	GE-1		PNP
X4	2N1108	2nd IF Amp.	DS25	GE-1		PNP
X5	2N185	Driver-Speech Amp.	DS26	GE-2	2N406	PNP
X6	2N185	Output-Modulator	DS26	GE-2	2N408	PNP
X7	2N185	Output-Modulator	DS26	GE-2	2N408	PNP
X8	R425	Trans.-Osc.	DS34	GE-1		PNP
X9	R424	Final Amp.	DS34	GE-1		PNP

POWER RECTIFIERS & SIGNAL DIODES

ITEM No.	MEASURED CURRENT	ORIGINAL Part or Type No.	RECTIFIERS			NOTES
			MALLORY PART No.	RCA PART No.	SARKES TARZIAN PART No.	
X10 X11		56-4 56-10				Detector Squelch

ELECTROLYTIC CAPACITORS

ITEM No.	RATING		REPLACEMENT DATA						
	CAP.	VOLT.	HEATH PART No.	AEROVOX PART No.	CORNELL-DUBILIER PART No.	GENERAL ELECTRIC PART No.	MALLORY PART No.	PYRAMID PART No.	SPRAGUE PART No.
C1	10	12	25-115	BCD12010	ECPB408	MT1-5	PET1760	MLV10-12	VL-1127
C2	10	15	25-54	PTT66	NLW10-15	MT1-5	TT15X10	MLV10-15	TE-1155
C3	10	15	25-54	PTT66	NLW10-15	MT1-5	TT15X10	MLV10-15	TE-1155
C4	10	12	25-115	BCD12010	ECPB408	MT1-5	PET1760	MLV10-12	VL-1127
C5	10	12	25-115	PTT53	NLW10-15	MT1-5	TT12X10	MLV10-12	TE-1128
C6	50	10	25-116	BCD10050	ECPB415	MT1-16	PET1575	MLV50-10	VL-1134
C7	100	12	25-117	BCD12100	ECPB417	MT1-19	TT12X100	MLV100-12	VL-1140

FIXED CAPACITORS

ITEM No.	RATING	REMARKS	REPLACEMENT DATA					
			AEROVOX PART No.	CENTRALAB PART No.	CORNELL-DUBILIER PART No.	ELMENCO PART No.	MALLORY PART No.	SPRAGUE PART No.
C8	30 5%		ADM-15-300	TCZ-30	22R5Q3	CM-15-300J		1FM-43
C9	.005 10%		DI-5000			CCD-502	JF-250	10TS-D50
C10	.005 10%		DI-5000			CCD-502	JF-250	10TS-D50
C11	30 5%		ADM-15-300	TCZ-30	22R5Q3	CM-15-300J		1FM-43
C12	.005 10%		DI-5000			CCD-502	JF-250	10TS-D50
C13	.05		TTD-05	CK-503	H05S5			TG-S50
C14	50 5%		ADM-15-500	TCZ-30	22R5Q5	CM-15-500J	MCE-225	1FM-45
C15	.05		TTD-05	CK-503	H05S5			TG-S50
C16	22 5%		ADM-15-220	TCZ-22	22R5Q22	CM-15-220J		1FM-422
C17	.005 10%		DI-5000			CCD-502	JF-250	10TS-D50
C18	.05		TTD-05	CK-503	H05S5			TG-S50
C19	.05		TTD-05	CK-503	H05S5			TG-S50
C20	.05		TTD-05	CK-503	H05S5			TG-S50
C21	.05		TTD-05	CK-503	H05S5			TG-S50
C22	.05		TTD-05	CK-503	H05S5			TG-S50
C23	.05		TTD-05	CK-503	H05S5			TG-S50
C24	.05		TTD-05	CK-503	H05S5			TG-S50
C25	.1		TTD-1	CK-104	H05P1			TG-P10
C26	.005 10%		DI-5000			CCD-502	JF-250	10TS-D50
C27	.005 10%		DI-5000			CCD-502	JF-250	10TS-D50
C28	.05		TTD-005	CK-503	H05S5			TG-S50
C29	.005 10%		DI-5000			CCD-502	JF-250	10TS-D50
C30	30 5%		ADM-15-300	TCZ-30	22R5Q3	CM-15-300J		1FM-43
C31	30 5%		ADM-15-300	TCZ-30	22R5Q3	CM-15-300J		1FM-43
C32	.01 10%	#21-47						
C33	.01 10%	#21-47						
C34	47 5%		ADM-15-470	TCZ-47	22R5Q47	CM-15-470J		1FM-447
C35	.01 10%	#21-47						
C36	.01 10%	#21-47						

Heath Part Number.

CONTROLS

All wattages 1/2 watt, or less, unless otherwise listed.

ITEM No.	USE	RESIST-ANCE	REPLACEMENT DATA				
			HEATH PART No.	CENTRALAB PART No.	CLAROSTAT PART No.	CTS-IRC PART No.	MALLORY PART No.
R1 R2	Volume & Switch Squelch	10K 100K	19-69 10-125				MLC14A-S MLC15L

PARTS LIST AND DESCRIPTION (CONTINUED)

COILS (RF-IF)

ITEM No.	USE	REPLACEMENT DATA					NOTES
		HEATH PART No.	MERIT PART No.	MILLER PART No.	STANCOR PART No.	WORKMAN PART No.	
L1	Toroid	40-430					
L2	Ant. Coil	40-388					
L3	RF	40-389					
L4	Choke (15uh)	45-51					
L5	1st IF	52-44					
L6	2nd IF	52-45					
L7	3rd IF	52-46					
L8	Trans. Osc.	40-390					
L9	Final	40-391					

TRANSFORMER (DRIVER)

ITEM No.	TURNS RATIO		REPLACEMENT DATA					NOTES
	PRI.	SEC.	HEATH PART No.	MERIT PART No.	STANCOR PART No.	THORDARSON PART No.	TRIAD PART No.	
T1	2.4	1	51-78					

TRANSFORMER (AUDIO OUTPUT)

ITEM No.	IMPEDANCE		REPLACEMENT DATA					NOTES
	PRI.	SEC.	HEATH PART No.	MERIT PART No.	STANCOR PART No.	THORDARSON PART No.	TRIAD PART No.	
T2	640Ω CT	8-10Ω	51-79					

SPEAKER

ITEM No.	TYPE	REPLACEMENT DATA		NOTES
		HEATH PART No.	QUAM PART No.	
SP1	2 ½" PM 8-10Ω	1401-61		

BATTERIES

ITEM No.	VOLTAGE	HEATH PART No.	REPLACEMENT DATA			NOTES
			BURGESS	EVEREADY	MALLORY	
M1	9V		2U6	216	M1604 (Zinc Carbon) MN1604 (Manganese) TR146 (Mercury)	

MISCELLANEOUS

ITEM No.	PART NAME	HEATH PART No.	NOTES
M2	Crystal		Receive (Part numbers are consecutive from #404-67 for channel 1 thru #404-89 for channel 23)
M3	Crystal		Transmit (Part numbers are consecutive from #404-157 for channel 1 thru #404-179 for channel 23)
M4	Switch	1064-15	Receive-Transmit
	Printed Board	85-37F582	

CABINETS & CABINET PARTS

(When Ordering Cabinets & Cabinet Parts, Specify Model, Chassis & Color)

NAME	PART NO.	DESCRIPTION
Knob	462-143	Receive-Transmit
Knob	462-154	Squelch, Volume
Cabinet	100-M374	

WIRING DATA

General-use Hook-up Wire .... Use BELDEN No. 8530 (Solid) Available in 12 Colors
8524 (Stranded) Available in 12 Colors
Shielded Antenna Lead ..... Use BELDEN No. 8214 Lowest Loss (RG-8/U Type)
8237 Low Loss (RG-8/U)
8240 (Solid) Miniature (RG-58/U)
8259 (Stranded) Miniature (RG-58A/U)
Coiled Microphone Cable ..... Use BELDEN No. 8497 3 Conductor- 1 Shielded for Press-to-Talk (Neoprene)
8496 3 Conductor- 1 Shielded for Press-to-Talk (Vinyl)
Ignition Noise Suppression .... Use BELDEN No. 7300-Series Spark-Plug Sets
Bonding Strap ..... Use BELDEN No. 8661 (3/8 in.)

TRADE NAME: Heath Models GW-31, GWW-31

SUPPLIER: Heath Co., A Subsidiary of Daystrom, Inc.
Benton Harbor, Michigan

TYPE SET: 4 Transistor Single Channel Transceiver

POWER SUPPLY: 9 Volts DC

RATING: 15MA @ 9VDC (Receive)
26MA @ 9VDC (Transmit)

TUNING RANGE: Any one of Channel 1 thru 23

ALIGNMENT INSTRUCTIONS

Volume control should be at maximum position. Output of signal generator should be no higher than necessary to obtain an output reading.
Suggested Alignment Tools:
A1, A2.....GENERAL CEMENT #8282, 8606, 9295....WALSCO #2526, 2543, 2544

RECEIVER ALIGNMENT

	SIGNAL GENERATOR	CHANNEL	ADJUST	REMARKS
1.	High side to antenna terminal, common to ground. Tune to channel frequency desired.		A1	Connect AC voltmeter across speaker voice coil. Adjust for maximum output.

TRANSMITTER ALIGNMENT

ONLY THOSE PERSONS PROPERLY LICENSED ARE PERMITTED TO MAKE REPAIRS OR ADJUSTMENTS WHICH MAY RESULT IN ILLEGAL OPERATION. (REFER TO FCC RULES & REGULATIONS PART 19, SUBPART D, SECTION 19.71)

	SPECIAL INSTRUCTIONS	INDICATOR	ADJUST	REMARKS
1.	Maintain supply voltage at 9 volts during transmitter alignment. Connect antenna.	RF Wattmeter or Field Strength Meter.	A2	Key Transmitter. Adjust for maximum indication.

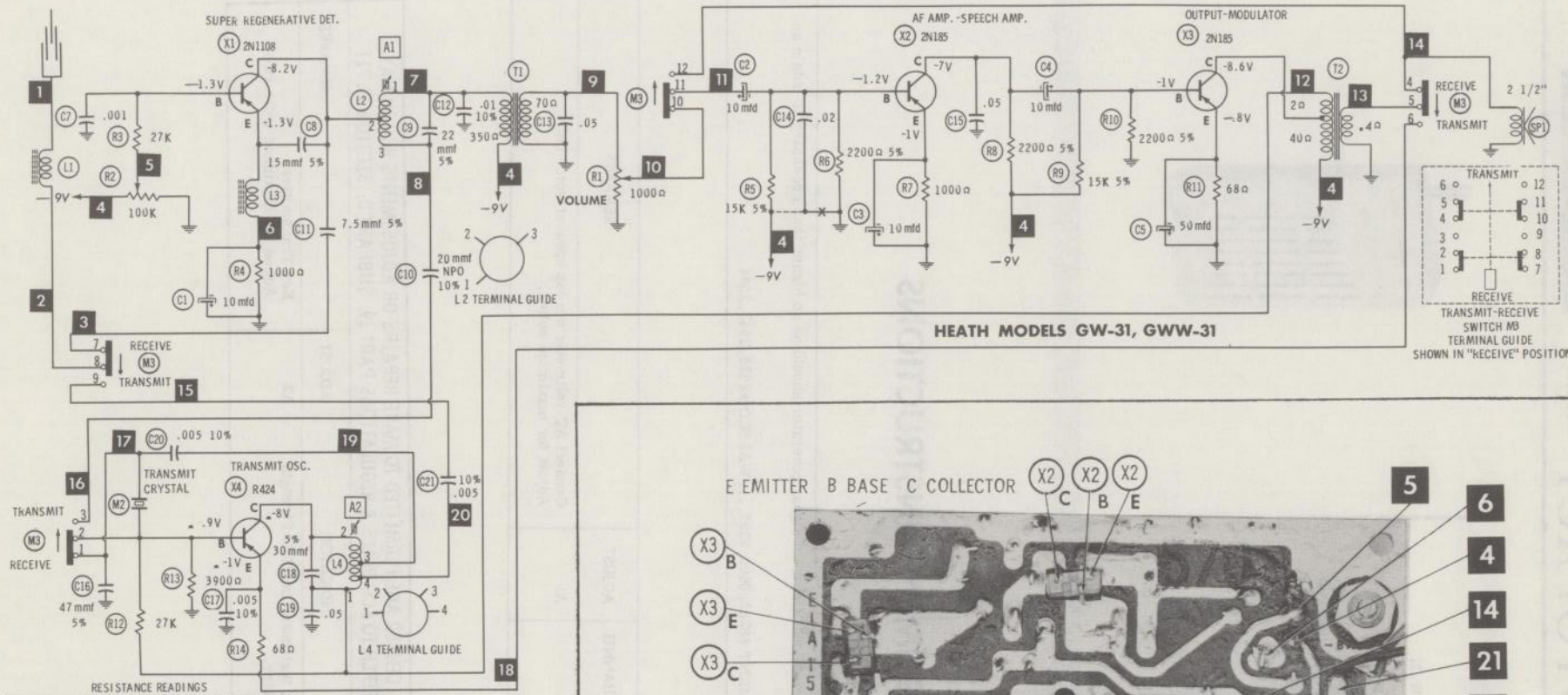

HEATH MODELS GW-31, GWW-31

RESISTANCE READINGS

ITEM	TYPE	BASE	EMITTER	COLLECTOR
X1	2N1108	77K	1000Ω	†330Ω
X2	2N185	2200Ω	1000Ω	†2200Ω
X3	2N185	2200Ω	68Ω	†40 Ω
X4	R424	3900Ω	-68Ω	†42Ω

ALL MEASUREMENTS TAKEN IN RECEIVE POSITION UNLESS OTHERWISE DESIGNATED.
- TAKEN IN TRANSMIT POSITION.
† MEASURED FROM SWITCH ON VOLUME CONTROL.

A PHOTOFACT STANDARD NOTATION SCHEMATIC with CIRCUITRACE™

⊖ See parts list for alternate value or application.
1. Voltage measurements taken with vacuum tube voltmeter.
2. All controls set for normal operation, no signal applied.
3. Measured values are from socket pin or terminal to common ground.
4. All terminals viewed from bottom unless otherwise designated.
5. Numbers assigned to terminals may not be found on the unit.
6. Supply voltage maintained at rated value for voltage readings.

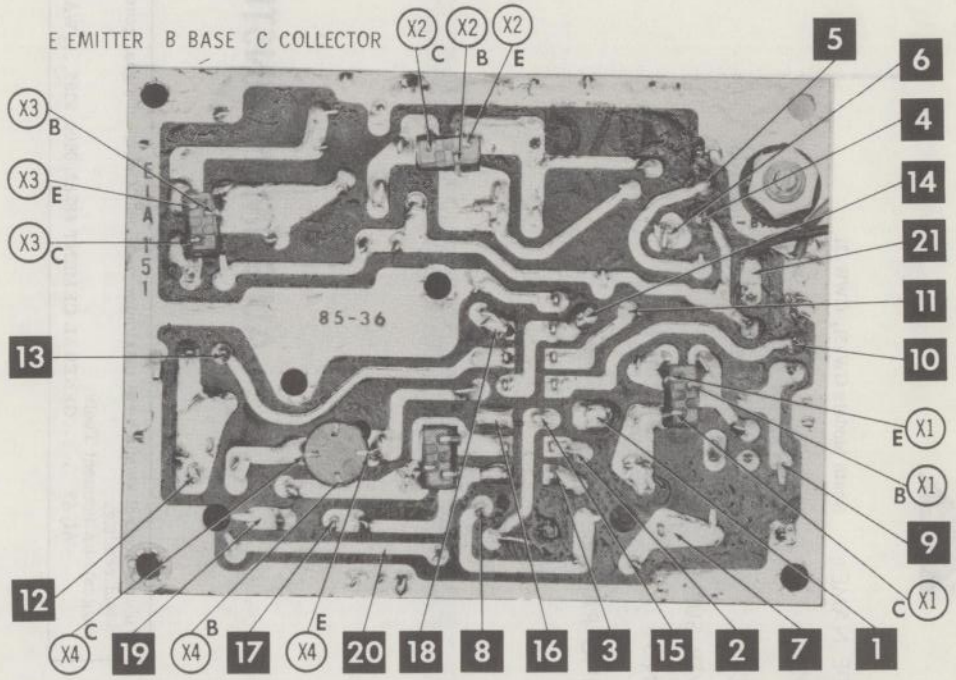

A Howard W. Sams CIRCUITRACE™ Photo

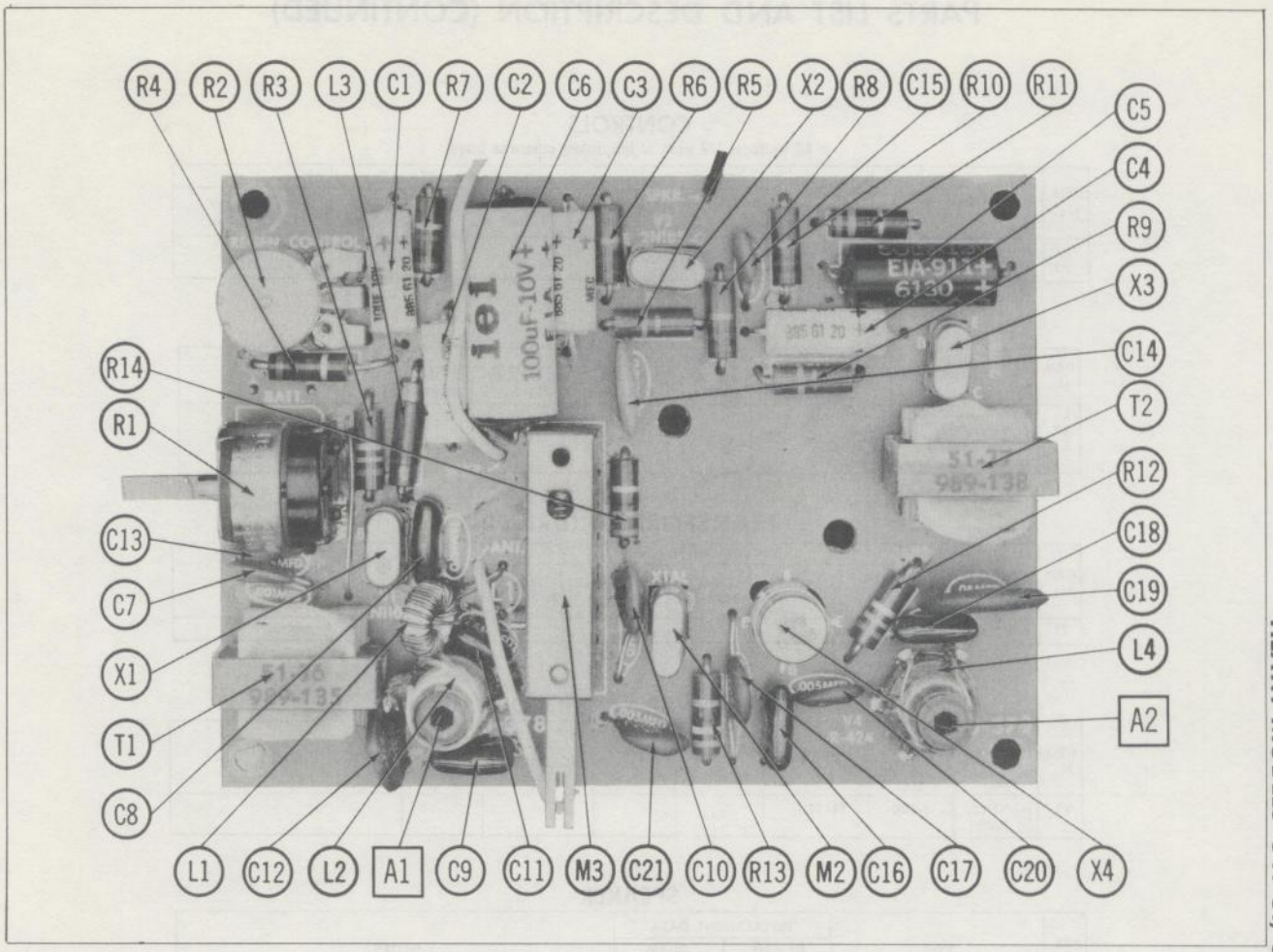

PARTS LIST AND DESCRIPTION

TRANSISTORS

ITEM No.	ORIG. TYPE	USE	REPLACEMENT DATA			NOTES
			DELCO PART No.	GENERAL ELECTRIC PART No.	RCA PART No.	
X1	2N1108	Super Regenerative Det.	DS25	GE-1		PNP
X2	2N185	AF Amp.-Speech Amp.	DS26	GE-2	2N406	PNP
X3	2N185	Output-Modulator	DS26	GE-2	2N408	PNP
X4	R424	Transmit Osc.	DS34	GE-1		PNP

ELECTROLYTIC CAPACITORS

ITEM No.	RATING		REPLACEMENT DATA						
	CAP.	VOLT.	HEATH PART No.	AEROVOX PART No.	CORNELL-DUBILIER PART No.	GENERAL ELECTRIC PART No.	MALLORY PART No.	PYRAMID PART No.	SPRAGUE PART No.
C1	10	10	25-54	PTT39	NLW10-15	MT1-5	TT12X10	MLV10-10	TE-1114
C2	10	10	25-54	PTT39	NLW10-15	MT1-5	TT12X10	MLV10-10	TE-1114
C3	10	10	25-54	PTT39	NLW10-15	MT1-5	TT12X10	MLV10-10	TE-1114
C4	10	10	25-54	PTT39	NLW10-15	MT1-5	TT12X10	MLV10-10	TE-1114
C5	50	10	25-55	PTT45	NLW50-10	MT1-16	TT10X50	MLV50-10	TE-1119
C6	100	10	25-56	PTT46	NLW100-12	MT1-19	TT12X100	MLV100-10	TE-1119, 3

FIXED CAPACITORS

ITEM No.	RATING	REMARKS	REPLACEMENT DATA					
			AEROVOX PART No.	CENTRALAB PART No.	CORNELL-DUBILIER PART No.	ELMENCO PART No.	MALLORY PART No.	SPRAGUE PART No.
C7	.001		DI-1000	DM-102	H05D1	CCD-102	GP210	10TS-D10
C8	15 5%		ADM-15-150	TCZ-15			CNO-415	10TCC-Q15
C9	22 5%		ADM-15-220	TCZ-22			CNO-422	10TCC-Q22
C10	20 NPO 10%		NPO-DI 20	DTZ-20	C10Q2C	CCTO-200		10TCC-Q20
C11	7.5 5%	#20-52						
C12	.01 10%	#21-47						10TS-S10
C13	.05		TTD-05	CK-503	H05S5			TG-S50
C14	.02		TTD-02	CK-203	H05S2		TA-120	TG-S20
C15	.05		TTD-05	CK-503	H05S5			TG-S50
C16	47 5%		ADM-15-470	TCZ-47			CNO-447	10TCC-Q47
C17	.005 10%		DI-5000			CCD-502	JF-250	10TS-D50
C18	30 5%		ADM-15-300	TCZ-30				10TCC-Q30
C19	.05		TTD-05	CK-503	H05S5			TG-S50
C20	.005 10%		DI-5000			CCD-502	JF-250	10TS-D50
C21	.005 10%		DI-5000			CCD-502	JF-250	10TS-D50

Heath Part Number.

PARTS LIST AND DESCRIPTION (CONTINUED)

CONTROLS

All wattages 1/2 watt, or less, unless otherwise listed.

ITEM No.	USE	RESIST-ANCE	REPLACEMENT DATA				
			HEATH PART No.	CENTRALAB PART No.	CLAROSTAT PART No.	CTS-IRC PART No.	MALLORY PART No.
R1	Volume & Switch	1000Ω	19-65				
R2	Regeneration	100K	10-123				MCL15L

COILS (RF-IF)

ITEM No.	USE	REPLACEMENT DATA					NOTES
		HEATH PART No.	MERIT PART No.	MILLER PART No.	STANCOR PART No.	WORKMAN PART No.	
L1	Ant. Load	40-380					
L2	Receiver Osc.	40-378					
L3	Choke (15uh)	45-51					
L4	Trans. Osc. Final	40-379					

TRANSFORMER (DRIVER)

ITEM No.	TURNS RATIO		REPLACEMENT DATA					NOTES
	PRI.	SEC.	HEATH PART No.	MERIT PART No.	STANCOR PART No.	THORDARSON PART No.	TRIAD PART No.	
T1	1.8	1	51-76					

TRANSFORMER (AUDIO OUTPUT)

ITEM No.	IMPEDANCE		REPLACEMENT DATA					NOTES
	PRI.	SEC.	HEATH PART No.	MERIT PART No.	STANCOR PART No.	THORDARSON PART No.	TRIAD PART No.	
T2	1450Ω Tap @ 700Ω	8-10Ω	51-77					

SPEAKER

ITEM No.	TYPE	REPLACEMENT DATA		NOTES
		HEATH PART No.	QUAM PART No.	
SP1	2 ½" PM 8-10Ω	1401-61		

BATTERIES

ITEM No.	VOLTAGE	HEATH PART No.	REPLACEMENT DATA			NOTES
			BURGESS	EVEREADY	MALLORY	
M1	9V		2N6	246	M1602	

MISCELLANEOUS

ITEM No.	PART NAME	HEATH PART No.	NOTES
M2	Crystal		Transmit
M3	Switch	1064-15	Receive-Transmit
	Printed Board	85-36F509	

CABINETS & CABINET PARTS

(When Ordering Cabinets & Cabinet Parts, Specify Model, Chassis & Color)

NAME	PART NO.	DESCRIPTION
Knob	462-144	Volume
Knob	462-143	Slide Switch
Cabinet	90-176F	

WIRING DATA

General-use Hook-up Wire .... Use BELDEN No. 8530 (Solid) Available in 12 Colors
8524 (Stranded) Available in 12 Colors
Shielded Antenna Lead ..... Use BELDEN No. 8214 Lowest Loss (RG-8/U Type)
8237 Low Loss (RG-8/U)
8240 (Solid) Miniature (RG-58/U)
8259 (Stranded) Miniature (RG-58A/U)
Coiled Microphone Cable ..... Use BELDEN No. 8497 3 Conductor- 1 Shielded for Press-to-Talk (Neoprene)
8496 3 Conductor- 1 Shielded for Press-to-Talk (Vinyl)
Ignition Noise Suppression .... Use BELDEN No. 7300-Series Spark-Plug Sets
Bonding Strap ..... Use BELDEN No. 8661 (3/8 In.)

TRADE NAME: Lafayette Model HE-15B

SUPPLIER: Lafayette Radio Corp.
111 Jericho Turnpike, Syosset, L.I., N.Y.

TYPE SET: 6 Tube 8 Channel Transceiver

POWER SUPPLY: 110-120 Volts AC, 60 Cycles (or)
6 (or) 12 Volt Storage Battery

RATING: (Rec.) 42 Watts, .4 Amp. @117 Volts AC
(Trans.) 45 Watts, .41 Amp. @117 Volts AC

TUNING RANGE: Any 8 CB Channels 1 thru 22
(Receiver is continuously tuned)

ALIGNMENT INSTRUCTIONS

Suggested Alignment Tools:
A1, A2, A3, A4.....GENERAL CEMENT #5097, 8727..... WALSCO #2515
A8.....GENERAL CEMENT #5000, 5003, 5066.... WALSCO #2525, 2528

RECEIVER ALIGNMENT

Connect output meter across voice coil.

SIGNAL GENERATOR	CHANNEL	ADJUST	REMARKS
High side thru .01mfd to pin 9 (grid) of Mixer, low side to ground. (455KC Mod.)	Any	A1, A2, A3, A4	Adjust for maximum output.
High side to antenna receptacle thru .1mfd, low side to ground. Tune to channel frequency.	Highest Channel Used.	A5, A6, A7	Adjust for maximum output.

A8 is adjusted for minimum interference on the lower 3 TV Channels.

TRANSMITTER ALIGNMENT

ONLY THOSE PERSONS PROPERLY LICENSED ARE PERMITTED TO MAKE REPAIRS OR ADJUSTMENTS WHICH MAY RESULT IN ILLEGAL OPERATION. (REFER TO FCC RULES & REGULATIONS PART 19, SUBPART D, SECTION 19.71)

INDICATOR	ADJUST	REMARKS
RF Power indicator lamp on front panel.	A9	Key transmitter. Adjust for maximum brilliance.
"	A10, C42	Turn C42 completely tight, then back off 1/2 turn. Adjust A10 for maximum brilliance (or minimum dip on IP meter inserted in front panel jack.
"	C42	Adjust for maximum brilliance (or minimum dip on front panel IP meter).

Press and release transmit button several times. The output indicator should show that the transmitter is operating each time. If not, back out A9, 1 1/2 turn at a time until transmitter operates each time the button is depressed.

PARTS LIST AND DESCRIPTION

TUBES

ITEM No.	USE	TYPE (AMPEREX / GENERAL ELECTRIC / RCA / RAYTHEON / SYLVANIA)	ITEM No.	USE	TYPE (AMPEREX / GENERAL ELECTRIC / RCA / RAYTHEON / SYLVANIA)
V1	RF Amp. -Mixer	6EA8 (6U8A)*	V4	AF Amp. - Speech Amp.	12AX7
V2	Rec. Osc. -IF Amp.	6EA8 (6U8A)*	V5	Output - Modulator	6V6GT
V3	ANL - Squelch	6AL5	V6	Trans. Osc. - Final	6AW8A

* Alternate

POWER RECTIFIERS & SIGNAL DIODES

ITEM No.	MEASURED CURRENT	ORIGINAL Part or Type No.	RECTIFIERS: MALLORY PART No.	RECTIFIERS: RCA PART No.	RECTIFIERS: SARKES TARZIAN PART No.	NOTES
X1		26235-1	1N2070	1N1763	40H	HV Rectifier
X2		26235-1	1N2070	1N1763	40H	HV Rectifier
X3		1N34A				Detector

ELECTROLYTIC CAPACITORS

ITEM No.	RATING: CAP.	RATING: VOLT.	Lafayette PART No.	AEROVOX PART No.	CORNELL-DUBILIER PART No.	GENERAL ELECTRIC PART No.	GENERAL INSTRUMENT PART No.	MALLORY PART No.	SPRAGUE PART No.
C1	100	200		PRS1595	BR10035		TD-100-200	TC1265	TVA-1718
C2	100	200		PRS1595	BR10035		TD-100-200	TC1265	TVA-1718
C3A	▲40	350		AFH3-140-150	C0870		TMT-3367	FP367.5	TVL-3754.5
B	■40	350							
C	▲25	25							
C4	5	10		PTT-10005	NLW5-15		MLV5-12	TT12X5	TE-1127

FIXED CAPACITORS

ITEM No.	RATING	REMARKS	AEROVOX PART No.	CENTRALAB PART No.	CORNELL-DUBILIER PART No.	ELMENCO PART No.	MALLORY PART No.	SPRAGUE PART No.
C5	3-70	#2040-4				462		
C6	3 NPO 5%		NPO-SI 3.0	TCZ-3R3	C10V3C	CCTO-3R3	CNO-533	10TCC-V33
C7	10 N330 5%			TCA-10		*		10TCS-Q10
C8	.001		BPD-001	DD-102	BYA10D1	CCD-102	B-210	5HK-D10
C9	.001		BPD-001	DD-102	BYA10D1	CCD-102	B-210	5HK-D10
C10	22 NPO		NPO-DI 22	DTZ-22	C10Q22C	CCTO-220	CNO-422	10TCC-Q22
C11	100 N750		N750-DI 100	DTN-100	C10T1U	CCTN-101	CN7-310	10TCU-T10
C12	47 N750		N750-DI 47	DTN-47	C10Q47U	CCTN-470	CN7-447	10TCU-Q47
C13	.001		BPD-001	DD-102	BYA10D1	CCD-102	B-210	5HK-D10
C14	1.5		NPO-SI 1.5	TCZ-1R5	C10V15C		CNO-515	10TCC-V15
C15	47 N750		N750-DI 47	DTN-47	C10Q47U	CCTN-470	CN7-447	10TCU-Q47
C16	22 NPO	Note 1	NPO-DI 22	DTZ-22	C10Q22C	CCTO-220	CNO-422	10TCC-Q22
C17	3.9 NPO				C10V4C			10TCC-V39
C18	10 N220					*		10TCR-Q10
C19	.001		BPD-001	DD-102	BYA10D1	CCD-102	B-210	5HK-D10
C20	.05 400V		P488N-047	DD-503	CUB4S47	4DP-3-473	GEM-4147	4TM-S47
C21	.01		BPD-01	DD-103	BYA10S1	CCD-103	B-110	5HK-S10
C22	.02 200V	(.005) †	P488N-022	DD-203	CUB4S22	4DP-2-223	GEM-4122	4TM-S22
C23	1.8		NPO-SI 1.8	TCZ-1R8	C10V18C		CNO-518	10TCC-V18
C24	10 NPO		NPO-DI 10	DTZ-10	C10Q1C	CCTO-100	CNO-410	10TCC-Q10
C25	220		DI-220	DD-221	L10T22	CCD-221	B-322	10TS-T22
C26	.1 200V		P488N-1	DF-104	CUB4P1	4DP-3-104	GEM-401	4TM-P10
C27	.01		BPD-01	DD-103	BYA10S1	CCD-103	B-110	5HK-S10
C28	.01		BPD-01	DD-103	BYA10S1	CCD-103	B-110	5HK-S10
C29	.002		BPD-002	DD-202	BYA10D2	CCD-202	B-220	5HK-D20
C30	.001		BPD-001	DD-102	BYA10D1	CCD-102	B-210	5HK-D10
C31	.001		BPD-001	DD-102	BYA10D1	CCD-102	B-210	5HK-D10
C32	.001		BPD-001	DD-102	BYA10D1	CCD-102	B-210	5HK-D10
C33	.01		BPD-01	DD-103	BYA10S1	CCD-103	B-110	5HK-S10
C34	.001		BPD-001	DD-102	BYA10D1	CCD-102	B-210	5HK-D10
C35	22 NPO 5%		NPO-DI 22	DTZ-22	C10Q22C	CCTO-220	CNO-422	10TCC-Q22
C36	.01		BPD-01	DD-103	BYA10S1	CCD-103	B-110	5HK-S10

FIXED CAPACITORS (cont)

ITEM No.	RATING	REMARKS	AEROVOX PART No.	CENTRALAB PART No.	CORNELL-DUBILIER PART No.	ELMENCO PART No.	MALLORY PART No.	SPRAGUE PART No.
C37	.001 2000V 10%							
C38	.01		BPD-01	DD-103	BYA10S1	CCD-103	B-110	5HK-S10
C39	.001 2000V 10%							
C40	10 NPO		NPO-DI 10	DTZ-10	C10Q1C	CCTO-100	CNO-410	10TCC-Q10
C41	2.2 NPO 5%		NPO-SI 2.2	TCZ-2.2	C10V22C		CNO-212	10TCC-V22
C42		#2051-5						
C43	.001		BPD-001	DD-102	BYA10D1	CCD-102	B-210	5HK-D10
C44	.02		BYD-02	DD-203	BYB6S2	CCD-203	B-120	5HK-S20

* Not normally in distributor's stock. Available thru distributor on order to manufacturer.
Note 1. Not used in some versions. # Lafayette Part Number. † Alternate Value.

CONTROLS

All wattages 1/2 watt, or less, unless otherwise listed.

ITEM No.	USE	RESISTANCE	Lafayette PART No.	CENTRALAB PART No.	CLAROSTAT PART No.	CTS-IRC PART No.	MALLORY PART No.
R1	Volume & Switch	1meg	V-329-3	B-70-S	A-47-1meg-Z, FS-3, SWE-20	Q13-137, 76-2	U-53, US-27
R2	Squelch	1meg	V-330-3	B-70	A-47-1meg-Z	Q13-137	U-53

RESISTORS (Power and Special)

ITEM No.	RATING	IRC PART No.	WORKMAN PART No.	REMARKS	ITEM No.	RATING	IRC PART No.	WORKMAN PART No.	REMARKS
R31	5000Ω 5W	PW5-5000	5W-SQ-5000		R32	330Ω 5W	PW5-330	5W-SQ-330	

COILS (RF-IF)

ITEM No.	USE	Lafayette PART No.	MERIT PART No.	MILLER PART No.	STANCOR PART No.	WORKMAN PART No.	NOTES
L1	TV Trap	①					① 7 Turns #36 Wire
L2	RF Bandpass	180-4					
L3	RF Bandpass	180-2	TV-118	6171-A	RTC-8609	T216	② Battery versions only.
L4	Rec. Oscillator	180-1					
L5	1st IF	1-110-4					
L6	2nd IF	1-110-1					
L7	Trans. Osc. Plate	180-2	TV-118	6171-A	RTC-8609	T216	
L8	Final Hash Choke	190-5 ②					

TRANSFORMER (POWER)

ITEM No.	RATING: PRI.	RATING: SEC. 1	RATING: SEC. 2	Lafayette PART No.	MERIT PART No.	STANCOR PART No.	THORDARSON PART No.	TRIAD PART No.	NOTES
T1	117VAC @ .4A	110VAC @ .55A*	6.3VAC 2.3A	PT-178-3					* .65 A in Transmit

PARTS LIST AND DESCRIPTION (CONTINUED)

TRANSFORMER (AUDIO OUTPUT)

ITEM No.	IMPEDANCE PRI.	IMPEDANCE SEC.	REPLACEMENT DATA Lafayette PART No.	MERIT PART No.	STANCOR PART No.	THORDARSON PART No.	TRIAD PART No.	NOTES
T2	5200Ω Tap@ 90%	3-4Ω	T-179-2		A-3817			

SPEAKER

ITEM No.	TYPE	REPLACEMENT DATA Lafayette PART No.	QUAM PART No.	NOTES
SP1	4" PM 3-4Ω	S-719-1	3A05	

FUSES

ITEM No.	TYPE	RATING	REPLACEMENT DATA Lafayette PART No. FUSE	Lafayette PART No. HOLDER	LITTELFUSE PART No. FUSE	LITTELFUSE PART No. HOLDER	BUSS PART No. FUSE	BUSS PART No. HOLDER
M1	3AG	1A 250V	①		318001		GJV-1	
	3AG	10A 32V	②		312010 (3AG 10A 32V)	155020	AGC-5	HDJ

① AC Operation. ② DC Operation.

MISCELLANEOUS

ITEM No.	PART NAME	Lafayette PART No.	NOTES
M2	Tuning Capacitor	V-235-1	Receiver Tuning
M3	Switch		Channel Selector (Rotary Wafer Type)
M4	Switch		Receive-Transmit (Spring Loaded, Rotary Wafer)
M5	Crystal		Transmit (Order by channel desired)
M6	RF Power Indicator		Neon Lamp (NE-2)

VIBRATOR

ITEM No.	TYPE	INPUT VOLTS	FRE-QUENCY	REPLACEMENT DATA Lafayette PART No.	CORNELL-DUBILIER PART No.	MALLORY PART No.	NOTES
	Interrupter	6.3	115~		5301	1601	6 Volt Versions
	Interrupter	12.6	115~		6301	G-1601	12 Volt Versions

WIRING DATA

General-use Hook-up Wire .... Use BELDEN No. 8530 (Solid) Available in 12 Colors
8524 (Stranded) Available in 12 Colors)

Shielded Antenna Lead ..... Use BELDEN No. 8214 Lowest Loss (RG-8/U Type)
8237 Low Loss (RG-8/U)
8240 (Solid) Miniature (RG-58/U)
8259 (Stranded) Miniature (RG-58A/U)

Coiled Microphone Cable ..... Use BELDEN No. 8499 Single Conductor Shielded (Neoprene)
8498 Single Conductor Shielded (Vinyl)

Ignition Noise Suppression .... Use BELDEN No. 7300-Series Spark-Plug Sets

Bonding Strap ..... Use BELDEN No. 8661 (3/8 In.)

CHASSIS—TOP VIEW

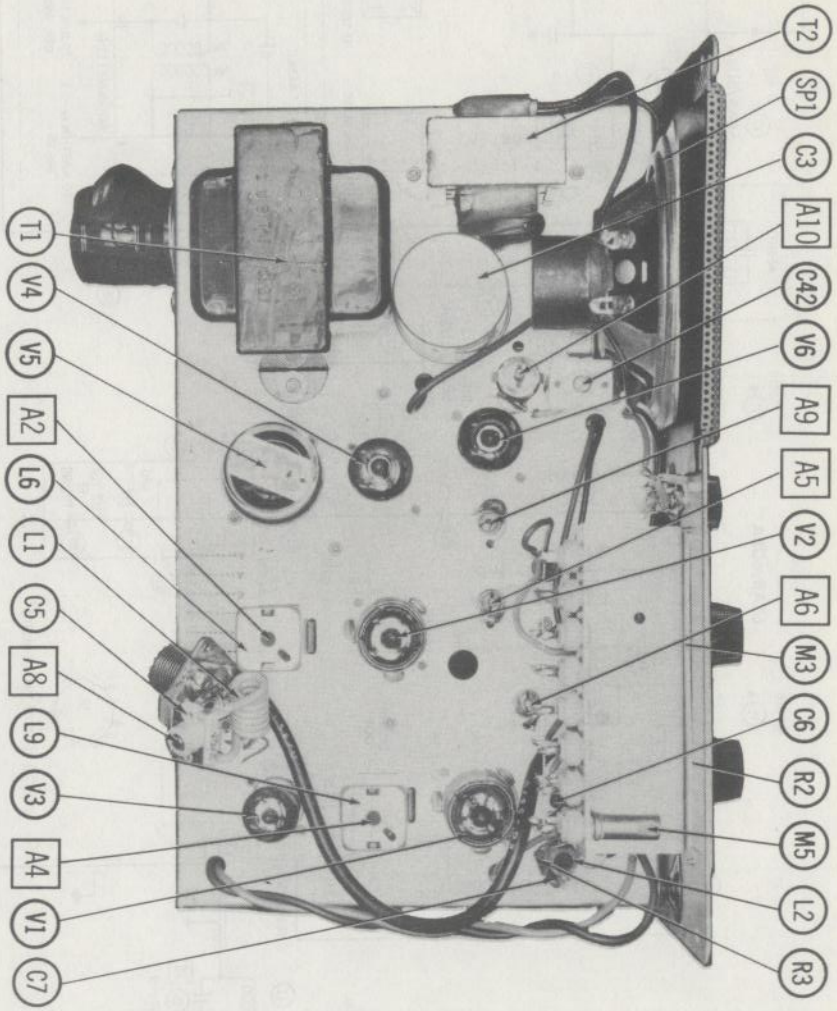

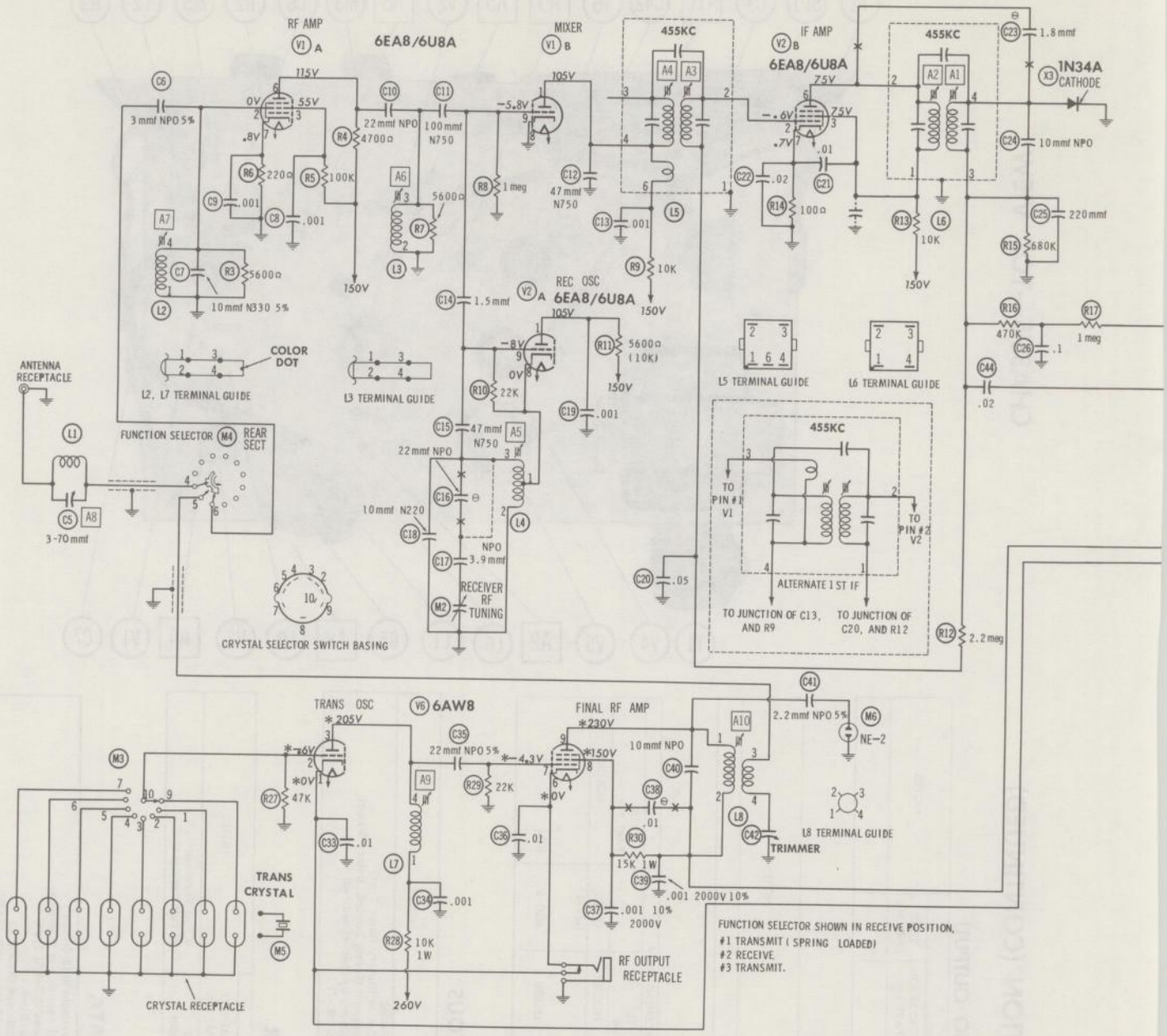

RESISTANCE READINGS

ITEM	TUBE	Pin 1	Pin 2	Pin 3	Pin 4	Pin 5	Pin 6	Pin 7	Pin 8	Pin 9
V1	6U8A 6EA8	†15K	0Ω	†100K	FIL	FIL	†10K	220Ω	0Ω	1 meg
V2	6U8A 6EA8	†15K	2.3 meg	†15K	FIL	FIL	†15K	100Ω	0Ω	22K
V3	6AL5	2 meg	1 meg	FIL	FIL	2 meg	0Ω	1 meg		
V4	12AX7	*†475K	4.7 meg	0Ω	FIL	FIL	†230K	470K	3300Ω	FIL
V5	6V6GT	0Ω	FIL	†500Ω	†300Ω	470K	TP	FIL	470Ω	
V6	6AW8A	*0Ω	*47K	†10K	FIL	FIL	*0Ω	22K	†650Ω	†15.6K

† MEASURED FROM OUTPUT OF X1.
* MEASURED IN TRANSMIT POSITION.

⊖ See parts list for alternate value or application.
1. Voltage measurements taken with vacuum tube voltmeter.
2. All controls set for normal operation, no signal applied.
3. Measured values are from socket pin or terminal to common ground.
4. All terminals viewed from bottom unless otherwise designated.
5. Numbers assigned to terminals may not be found on the unit.
6. Supply voltage maintained at rated value for voltage readings.

A PHOTOFACT STANDARD NOTATION SCHEMATIC

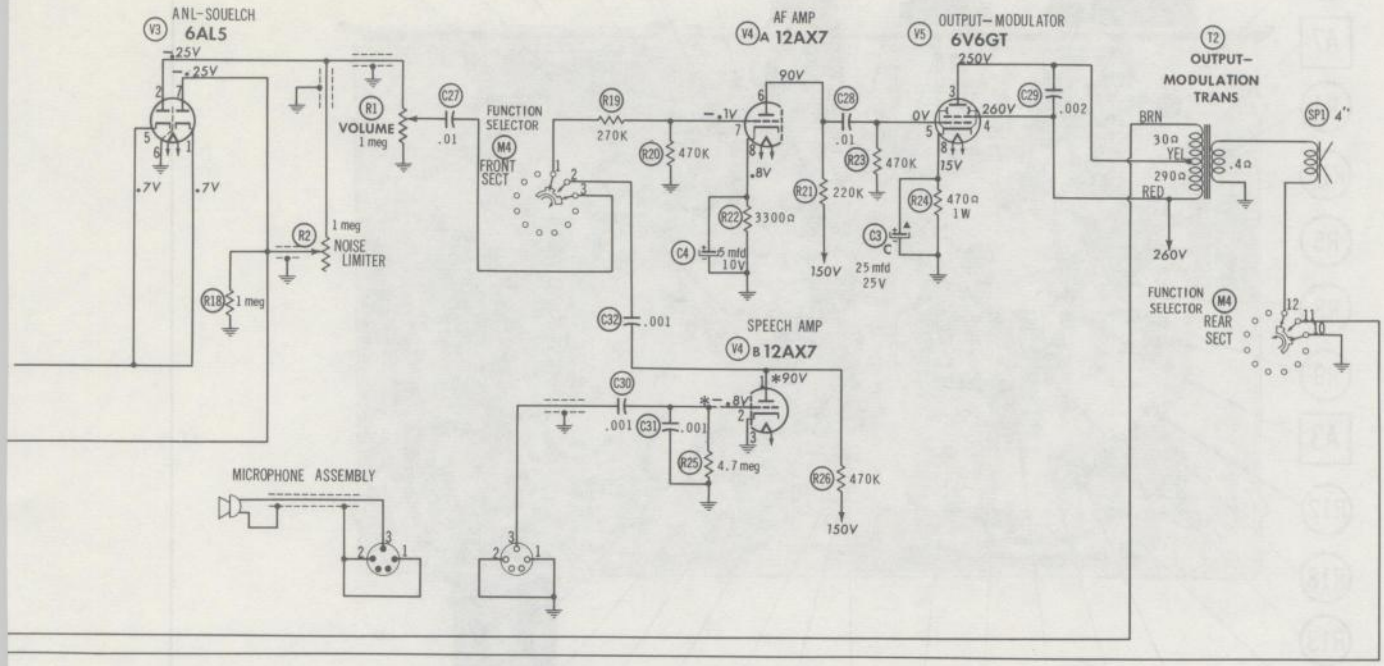

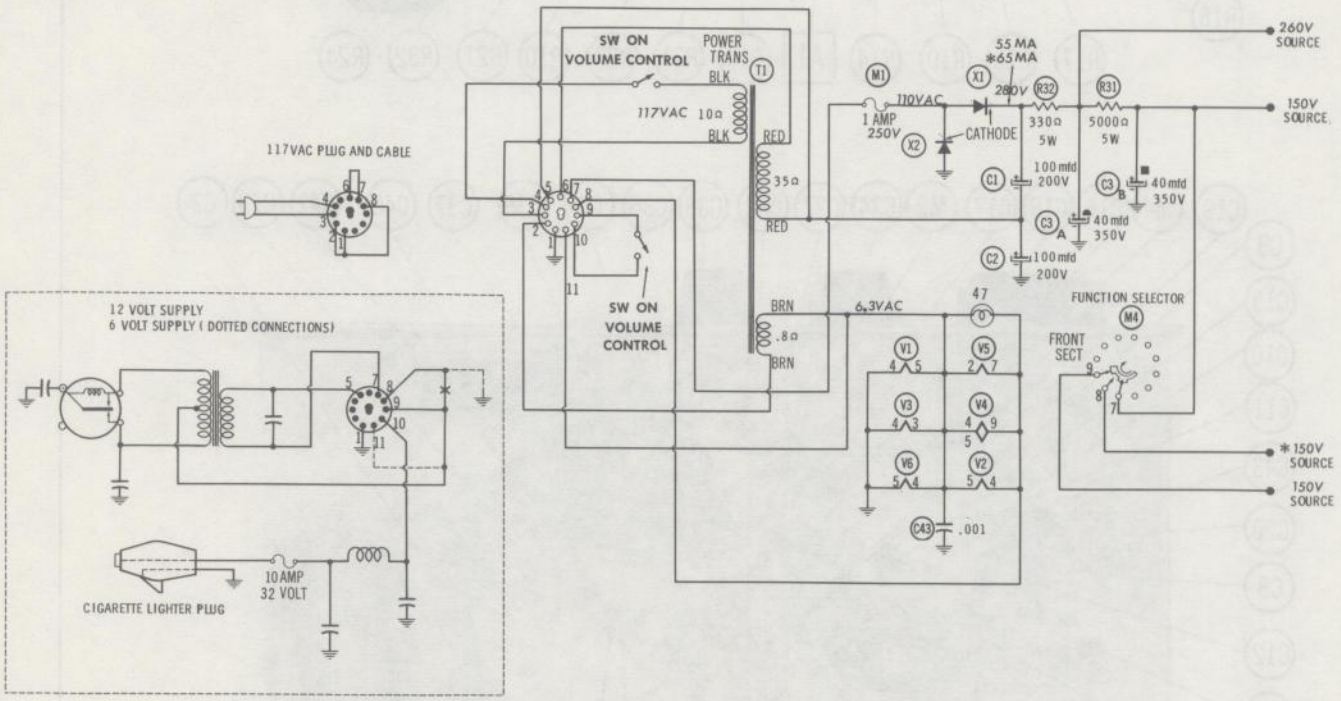

LAFAYETTE MODEL HE-15B

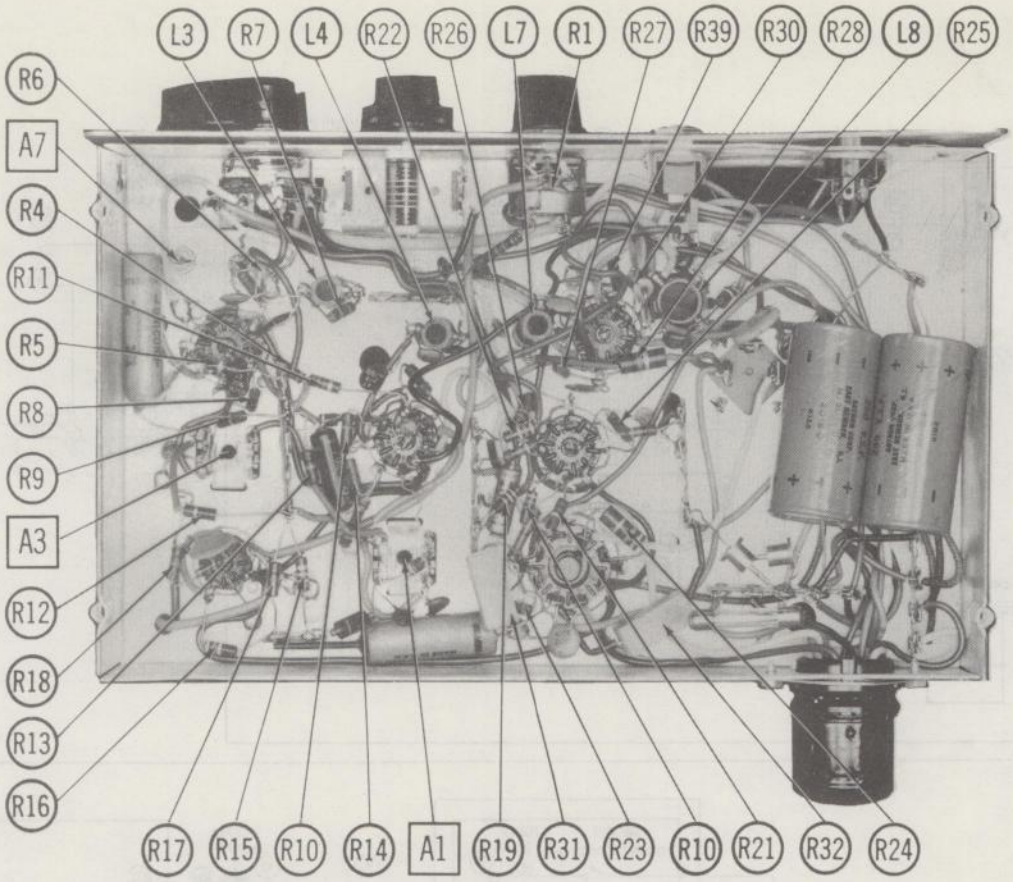
L3
R7
L4
R22
R26
L7
R1
R27
R39
R30
R28
L8
R25
R6
A7
R4
R11
R5
R8
R9
A3
R12
R18
R13
R16
R17
R15
R10
R14
A1
R19
R31
R23
R10
R21
R32
R24

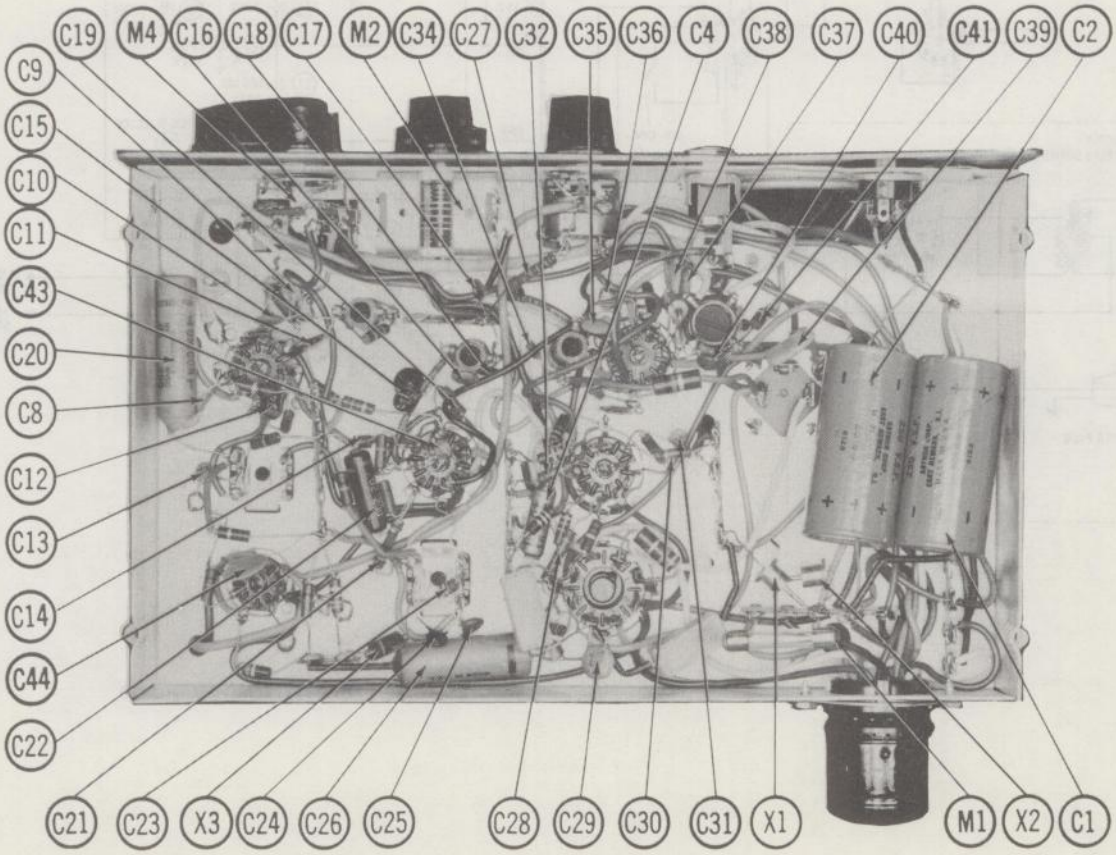
C19
M4
C16
C18
C17
M2
C34
C27
C32
C35
C36
C4
C38
C37
C40
C41
C39
C2
C9
C15
C10
C11
C43
C20
C8
C12
C13
C14
C44
C22
C21
C23
X3
C24
C26
C25
C28
C29
C30
C31
X1
M1
X2
C1

TRADE NAME:	Lafayette Model HE-20B
SUPPLIER:	Lafayette Radio Electronics Corp. 111 Jericho Turnpike, Syosset, L.I., N.Y.
TYPE SET:	7 Tube Citizens Band Transceiver
POWER SUPPLY:	110-120VAC, 60 Cycles (or) 12 Volt Storage Battery
RATING:	51 Watts, .5 Amp. @ 117VAC (or) 3.7 Amp. @12.6VDC (Receive)
TUNING RANGE:	Any 8 Crystal Controlled Channels 1—23 (Receiver may be manually tuned)

ALIGNMENT INSTRUCTIONS

Suggested Alignment Tools:

A1, A2, A3.....GENERAL CEMENT #5000, 5003, 5006
WALSCO #2515, 2516, 2518
A4.....GENERAL CEMENT #8282, 8606, 8606L
WALSCO #2526, 2543, 2544
A5 thru A10....GENERAL CEMENT #5097, 8607, 8727
WALSCO #2515

RECEIVER ALIGNMENT

Volume control should be at maximum position. Output of signal generator should be no higher than necessary to obtain an output reading.

SIGNAL GENERATOR	CHANNEL	ADJUST	REMARKS
High side thru .01mfd to pin 7 (grid) of Converter, low side to ground. Tune to 1650KC (400~ Mod.).	Any	A5, A6, A7, A8, A9, A10	Turn squelch control fully clockwise. Adjust for maximum output.
Across antenna receptacle. Tune to Channel Frequency.	Center Channel Used (Fixed)	A11	Connect a 100Ω resistor and .005mfd capacitor in series across the secondary of L3. Adjust for maximum output.
"	"	A12	Move resistor and capacitor to the primary of L3. Adjust for maximum output. Remove resistor and capacitor.
"	1 (26.965MC) (Tune)	A13	Adjust for maximum output. Two peaks will be obtained. Use the higher.
"	23 (27.255MC) (Tune)	A14	Adjust for maximum output. Readjust A13 and A14 until maximum calibration is attained.
		A4	Adjust for MINIMUM interference on the three lower TV channels.

TRANSMITTER ALIGNMENT

ONLY THOSE PERSONS PROPERLY LICENSED ARE PERMITTED TO MAKE REPAIRS OR ADJUSTMENTS WHICH MAY RESULT IN ILLEGAL OPERATION. (REFER TO FCC RULES & REGULATIONS PART 19, SUBPART D, SECTION 19.71)

INDICATOR	ADJUST	REMARKS
Connect DC probe of VTVM to pin 7 (grid) of final RF Amp, common to ground.	A1	Key transmitter and adjust for maximum deflection.
RF Power Indicator Meter	A2, A3	Key transmitter and adjust for maximum deflection.

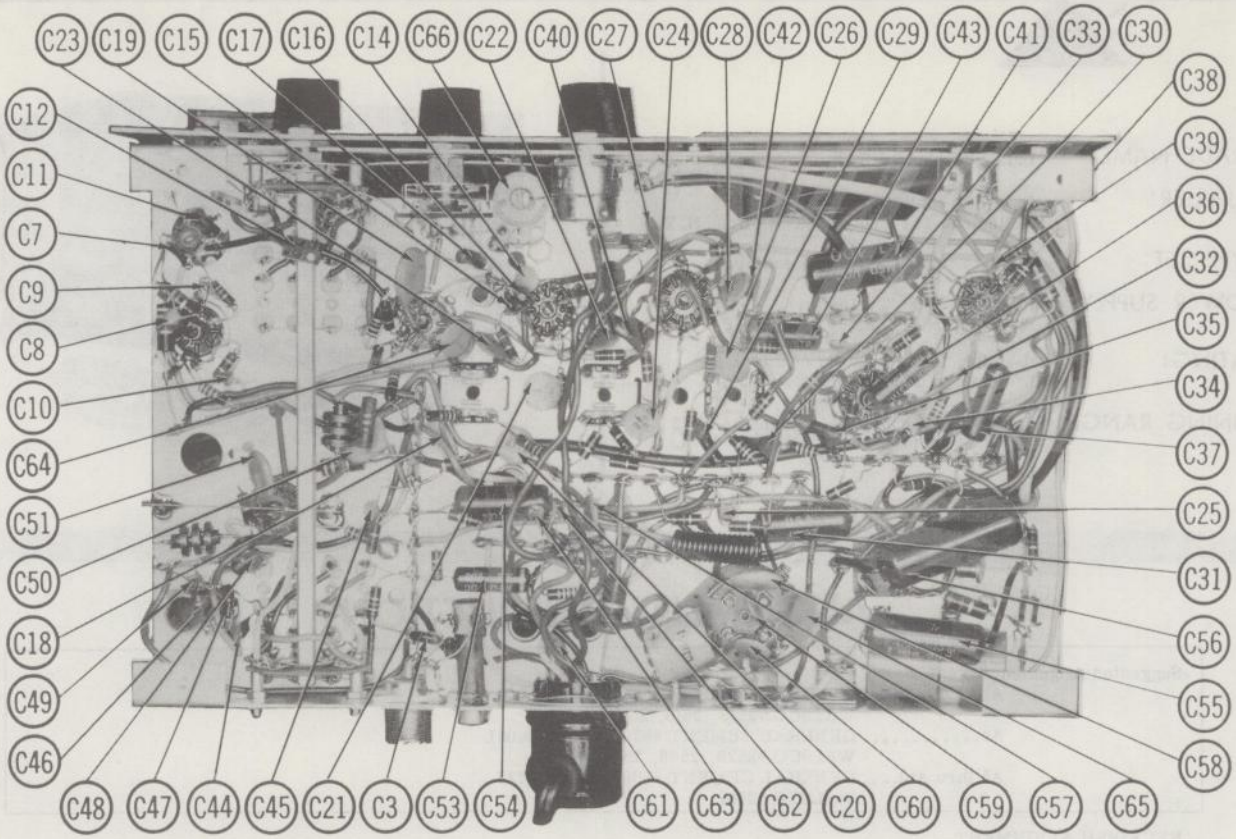
C23
C19
C15
C17
C16
C14
C66
C22
C40
C27
C24
C28
C42
C26
C29
C43
C41
C33
C30
C38
C39
C36
C32
C35
C34
C37
C25
C31
C56
C55
C58
C65
C57
C59
C60
C20
C62
C63
C61
C54
C53
C3
C21
C45
C44
C47
C48
C46
C49
C18
C50
C51
C64
C10
C8
C9
C7
C11
C12

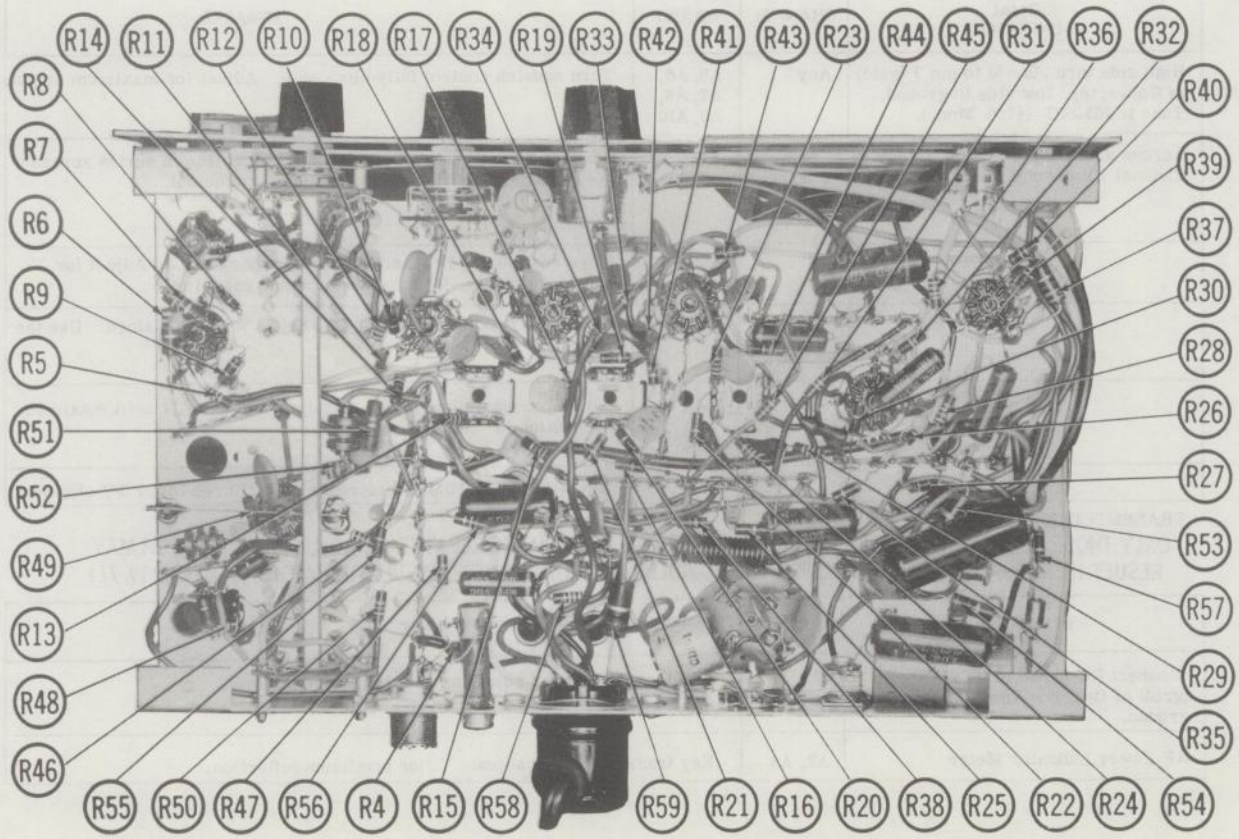
R14
R11
R12
R10
R18
R17
R34
R19
R33
R42
R41
R43
R23
R44
R45
R31
R36
R32
R40
R39
R37
R30
R28
R26
R27
R53
R57
R29
R35
R54
R24
R22
R25
R38
R20
R16
R21
R59
R58
R15
R4
R56
R47
R50
R55
R46
R48
R13
R49
R52
R51
R5
R9
R6
R7
R8

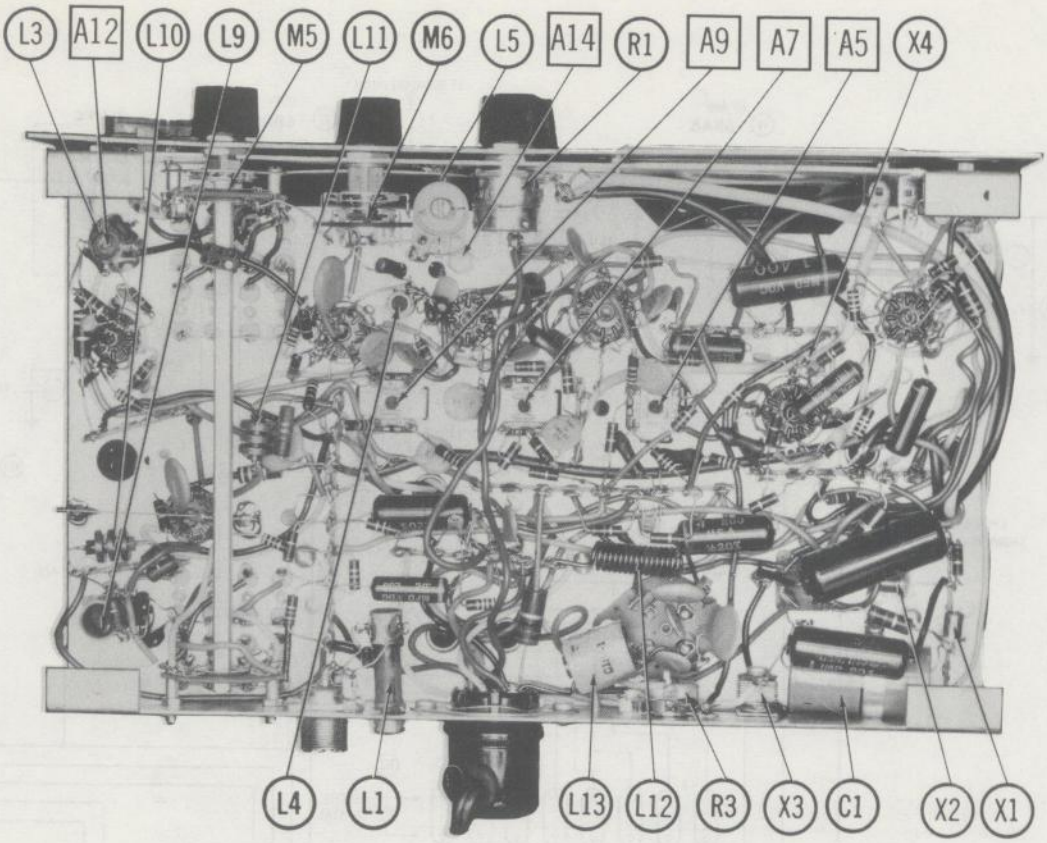
L3
A12
L10
L9
M5
L11
M6
L5
A14
R1
A9
A7
A5
X4
L4
L1
L13
L12
R3
X3
C1
X2
X1

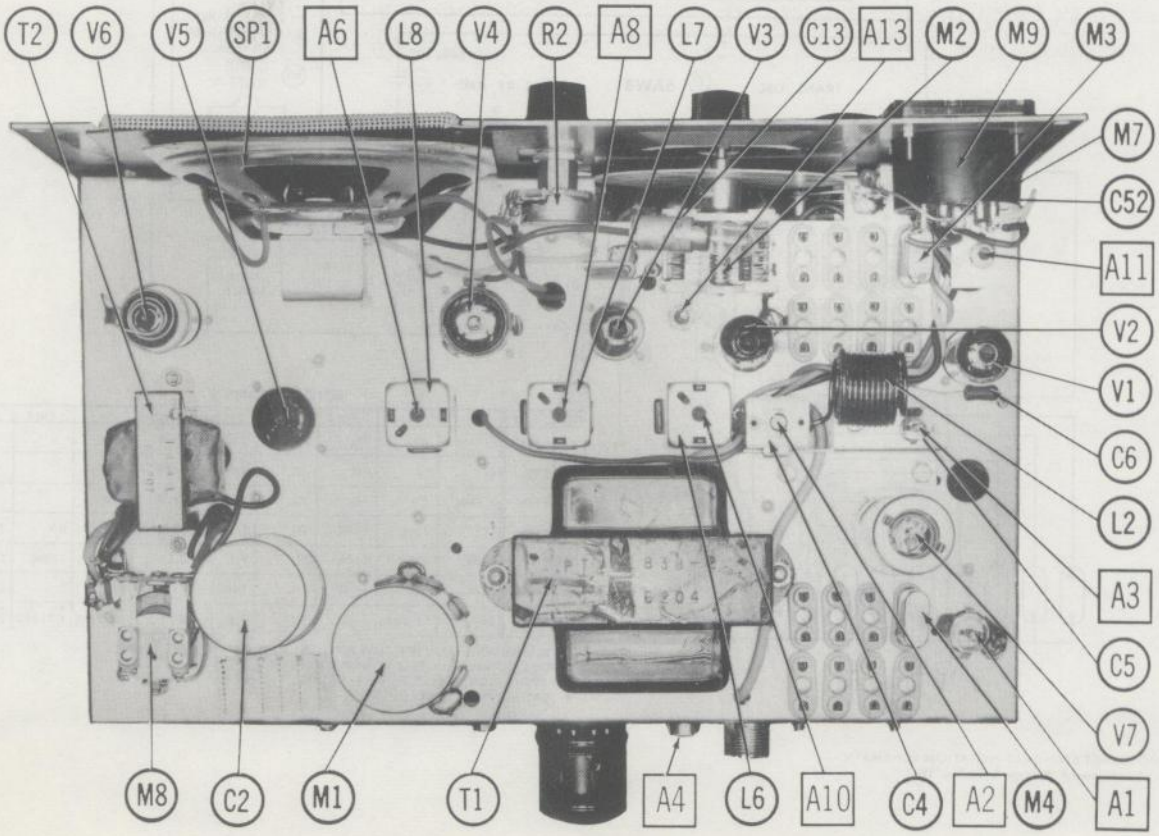
T2
V6
V5
SP1
A6
L8
V4
R2
A8
L7
V3
C13
A13
M2
M9
M3
M7
C52
A11
V2
V1
C6
L2
A3
C5
V7
A1
M8
C2
M1
T1
A4
L6
A10
C4
A2
M4

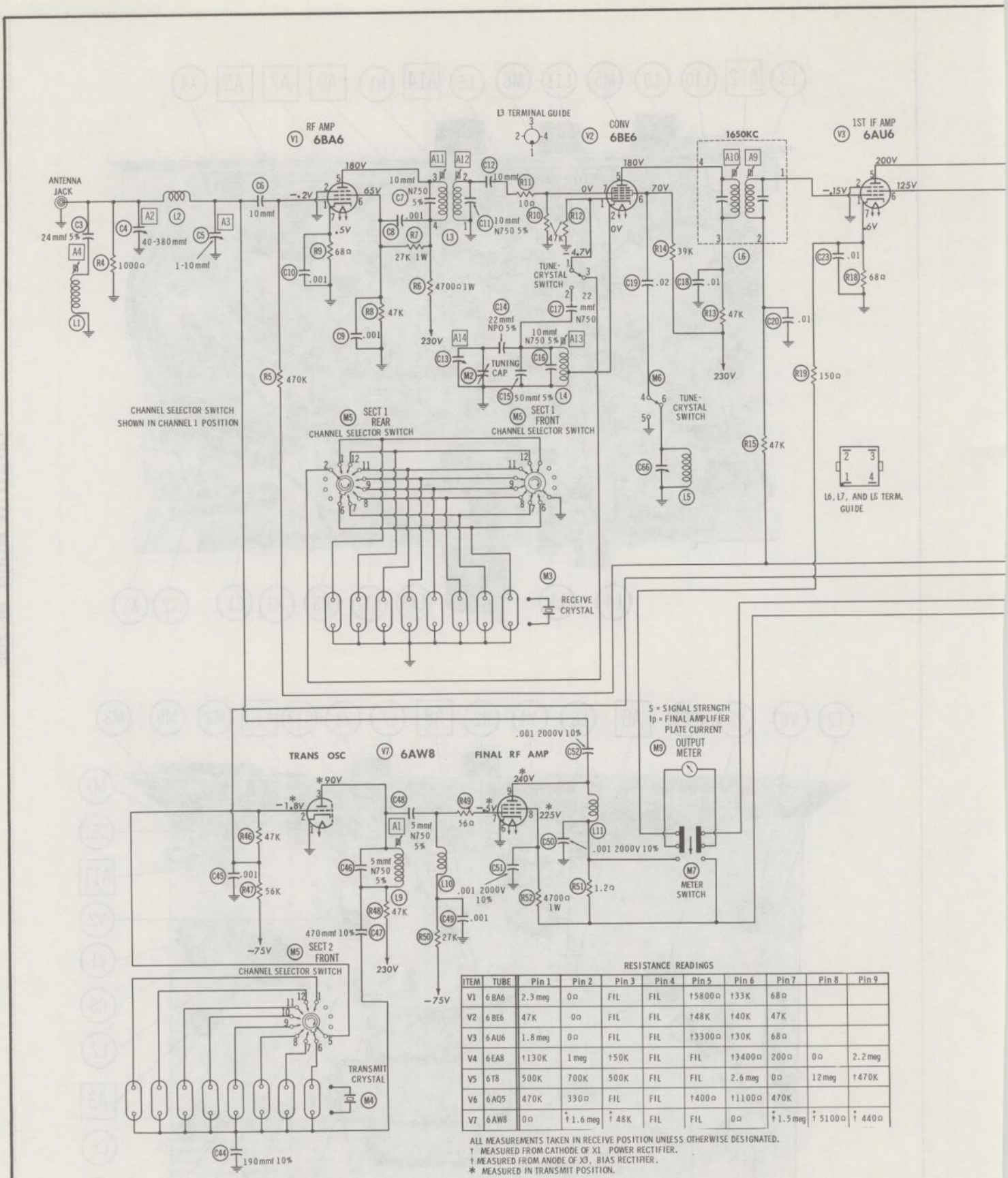

RESISTANCE READINGS

ITEM	TUBE	Pin 1	Pin 2	Pin 3	Pin 4	Pin 5	Pin 6	Pin 7	Pin 8	Pin 9
V1	6BA6	2.3 meg	0Ω	FIL	FIL	†5800Ω	†33K	68Ω		
V2	6BE6	47K	0Ω	FIL	FIL	†48K	†40K	47K		
V3	6AU6	1.8 meg	0Ω	FIL	FIL	†3300Ω	†30K	68Ω		
V4	6EA8	†130K	1 meg	†50K	FIL	FIL	†3400Ω	200Ω	0Ω	2.2 meg
V5	6T8	500K	700K	500K	FIL	FIL	2.6 meg	0Ω	12 meg	†470K
V6	6AQ5	470K	330Ω	FIL	FIL	†400Ω	†1100Ω	470K		
V7	6AW8	0Ω	*†1.6 meg	*†48K	FIL	FIL	0Ω	*†1.5 meg	*†5100Ω	*†440Ω

ALL MEASUREMENTS TAKEN IN RECEIVE POSITION UNLESS OTHERWISE DESIGNATED.
† MEASURED FROM CATHODE OF X1 POWER RECTIFIER.
† MEASURED FROM ANODE OF X3, BIAS RECTIFIER.
* MEASURED IN TRANSMIT POSITION.

A PHOTOFACT STANDARD NOTATION SCHEMATIC

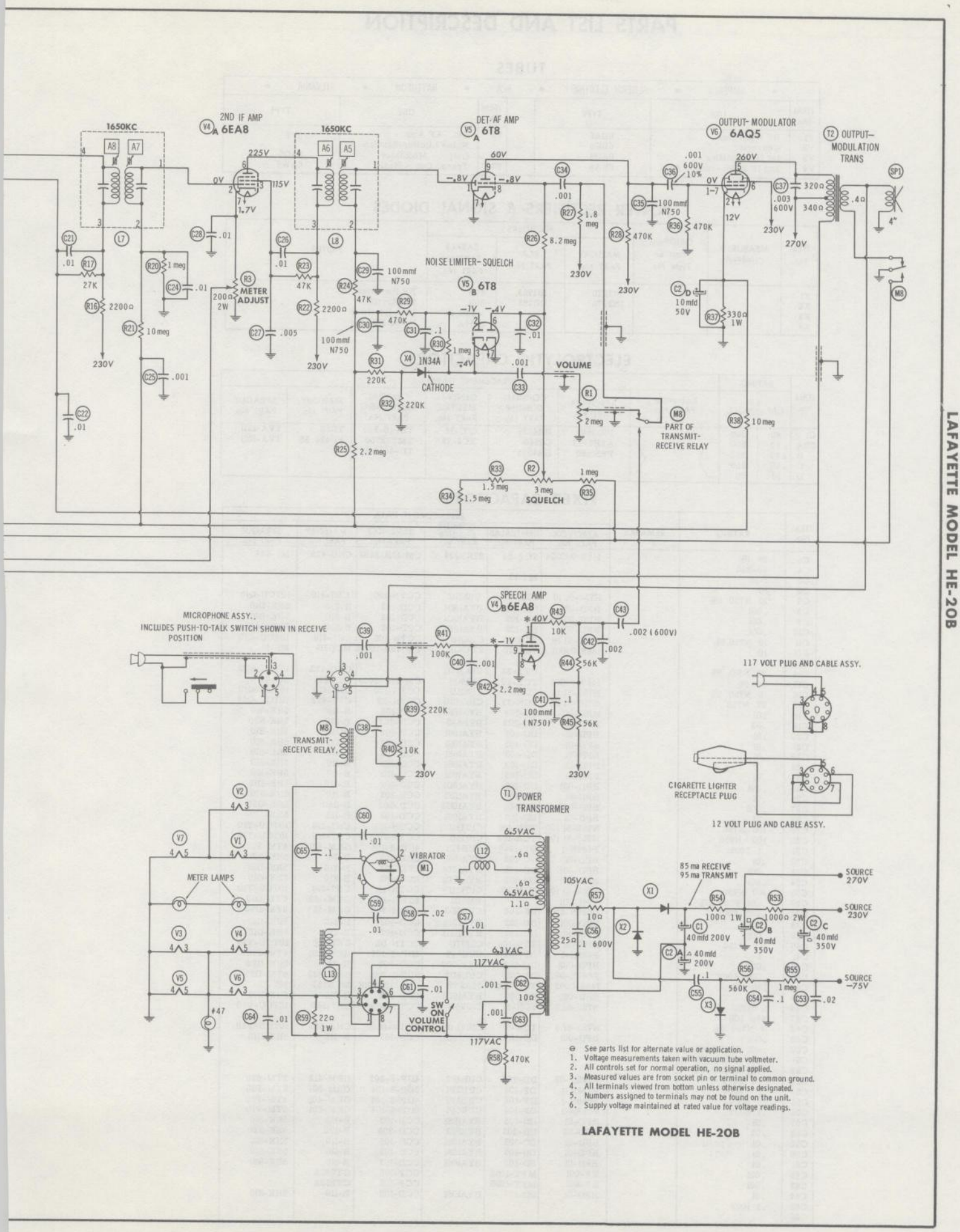

⊖ See parts list for alternate value or application.
1. Voltage measurements taken with vacuum tube voltmeter.
2. All controls set for normal operation, no signal applied.
3. Measured values are from socket pin or terminal to common ground.
4. All terminals viewed from bottom unless otherwise designated.
5. Numbers assigned to terminals may not be found on the unit.
6. Supply voltage maintained at rated value for voltage readings.

LAFAYETTE MODEL HE-20B

PARTS LIST AND DESCRIPTION

TUBES

◆ AMPEREX ◆ GENERAL ELECTRIC ◆ RCA ◆ RAYTHEON ◆ SYLVANIA ◆

ITEM No.	USE	TYPE	ITEM No.	USE	TYPE
V1	RF Amplifier	6BA6	V5	Det. -AF Amp. - Noise Limiter-Squelch	6T8
V2	Converter	6BE6			
V3	1st IF Amplifier	6AU6	V6	Output - Modulator	6AQ5
V4	2nd IF Amp. -Speech Amp.	6EA8	V7	Trans. Osc. -Final	6AW8

POWER RECTIFIERS & SIGNAL DIODES

ITEM No.	MEASURED CURRENT	ORIGINAL Part or Type No.	RECTIFIERS			NOTES
			MALLORY PART No.	RCA PART No.	SARKES TARZIAN PART No.	
X1			1N2070	1N1763	40H	HV Rectifier
X2			1N2070	1N1763	40H	HV Rectifier
X3					Model 12	Bias Rectifier
X4					1N34A	Noise Limiter

ELECTROLYTIC CAPACITORS

ITEM No.	RATING		REPLACEMENT DATA						
	CAP.	VOLT.	Lafayette PART No.	AEROVOX PART No.	CORNELL-DUBILIER PART No.	GENERAL ELECTRIC PART No.	GENERAL INSTRUMENT PART No.	MALLORY PART No.	SPRAGUE PART No.
C1	40	200		PRS1580	BR4025	QT1-14	TD-40-250	TC58	TVA-1511
C2A	▲40	200		AFH3-43	C0340	XC4-22	TMT-3700	FP420.36	TVA-1611
B	■40	350		PRS1580	BR4035		TD-40-350		
C	▰40	350							
D	10	50							

FIXED CAPACITORS

ITEM No.	RATING	REMARKS	REPLACEMENT DATA					
			AEROVOX PART No.	CENTRALAB PART No.	CORNELL-DUBILIER PART No.	ELMENCO PART No.	MALLORY PART No.	SPRAGUE PART No.
C3	24 5%		1469-000024	TCZ-24	22R5Q24	CM-19B-240J	CNO-425	MS-424
C4	40-380							
C5	1-10			829-10				
C6	10							
C7	10 N750 5%		N750-SI 10	TCN-10	C10Q1U	CCTN-100	CN7-410	10TCU-Q10
C8	.001		BPD-001	DD-102	BYA10D1	CCD-102	B-210	5HK-D10
C9	.001		BPD-001	DD-102	BYA10D1	CCD-102	B-210	5HK-D10
C10	.001		BPD-001	DD-102	BYA10D1	CCD-102	B-210	5HK-D10
C11	10 N750 5%		N750-SI 10	TCN-10	C10Q1U	CCTN-100	CN7-410	10TCU-Q10
C12	10		1469-00001	TCZ-10	22R5Q1	CM-19B-100M	MCB215	MS-41
C13								
C14	22 NPO 5%			DTZ-22	C10Q22C		CNO-422	10TCC-Q22
C15	50 5%		1469-00005	TCZ-50	22R5Q5	CM-19B-500J	MCE225	MS-45
C16	10 N750 5%		N750-SI 10	TCN-10	C10Q1U	CCTN-100	CN7-410	10TCU-Q10
C17	22 N750		N750-SI 22	TCN-22	C10Q22U	CCTN-22	CN7-422	10TCU-Q22
C18	.01		BPD-01	DD-103	BYA10S1	CCD-103	B-110	5HK-S10
C19	.02		BPD-02	DD-203	BYB6S2	CCD-203	B-120	5HK-S20
C20	.01		BPD-01	DD-103	BYA10S1	CCD-103	B-110	5HK-S10
C21	.01		BPD-01	DD-103	BYA10S1	CCD-103	B-110	5HK-S10
C22	.01		BPD-01	DD-103	BYA10S1	CCD-103	B-110	5HK-S10
C23	.01		BPD-01	DD-103	BYA10S1	CCD-103	B-110	5HK-S10
C24	.01		BPD-01	DD-103	BYA10S1	CCD-103	B-110	5HK-S10
C25	.001		BPD-001	DD-102	BYA10D1	CCD-102	B-210	5HK-D10
C26	.01		BPD-01	DD-103	BYA10S1	CCD-103	B-110	5HK-S10
C27	.005		BPD-005	DD-502	BYA10D5	CCD-502	B-250	5HK-D50
C28	.01		BPD-01	DD-103	BYA10S1	CCD-103	B-110	5HK-S10
C29	100 N750		N750-SI 100	TCN-100	C10T1U	CCTN-101	CN7-310	10TCU-T10
C30	100 N750		N750-SI 100	TCN-100	C10T1U	CCTN-101	CN7-310	10TCU-T10
C31	.1 200V		P488N-1	DF-104	CUB4P1	4DP-3-104	GEM-401	4TM-P10
C32	.01		BPD-01	DD-103	BYA10S1	CCD-103	B-110	5HK-S10
C33	.001		BPD-001	DD-102	BYA10D1	CCD-102	B-210	5HK-D10
C34	.001		BPD-001	DD-102	BYA10D1	CCD-102	B-210	5HK-D10
C35	100 N750		N750-SI 100	TCN-100	C10T1U	CCTN-101	CN7-310	10TCU-T10
C36	.001 600V 10%		V84C6D1		PM6D1	6DP-1-102	GEM-1621	6TM-D10
C37	.003 600V		P688N-003	D6-302	CUB6D3	6DP-1-302	GEM-623	6TM-D30
C38	.001		BPD-001	DD-102	BYA10D1	CCD-102	B-210	5HK-D10
C39	.001		BPD-001	DD-102	BYA10D1	CCD-102	B-210	5HK-D10
C40	100 N750		N750-SI 100	TCN-100	C10T1U	CCTN-101	CN7-310	10TCU-T10
C41	.1		P488N-1	DF-104	CUB4P1	4DP-3-104	GEM-401	4TM-P10
C42	.002		BPD-002	DD-202	BYA10D2	CCD-202	B-220	5HK-D20
C43	.002 600V		P688N-002	D6-202	CUB6D2	6DP-1-202	GEM-622	6TM-D20
C44	190 10%		1469-0002	TCZ-200	22R5T2	CM-19B-201K	MCB237	MS-32
C45	.001		BPD-001	DD-102	BYA10D1	CCD-102	B-210	5HK-D10
C46	5 N750 5%		N750-SI 5	TCN-5	C10V5U	CCTN-050	CN7-550	10TCU-V50
C47	470 10%							
C48	5 N750 5%		N750-SI 5	TCN-5	C10V5U	CCTN-050	CN7-550	10TCU-V50
C49	.001		BPD-001	DD-102	BYA10D1	CCD-102	B-210	5HK-D10
C50	.001 2000V 10%							
C51	.001 2000V 10%							
C52	.001 2000V 10%							
C53	.02 200V		P288N-02	DD-203	CUB2S2	4DP-2-203	GEM-412	2TM-S20
C54	.1 200V		P288N-1	DF-104	CUB2P1	2DP-3-104	GEM-201	2TM-P10
C55	.1 400V		P488N-1	DF-104	CUB4P1	4DP-3-104	GEM-401	4TM-P10
C56	.1 600V		P688N-1	DF-104	CUB6P1	6DP-4-104	GEM-601	6TM-P10
C57	.01		BPD-01	DD-103	BYA10S1	CCD-103	B-110	5HK-S10
C58	.02		BPD-02	DD-203	BYB6S2	CCD-203	B-120	5HK-S20
C59	.01		BPD-01	DD-103	BYA10S1	CCD-103	B-110	5HK-S10
C60	.01		BPD-01	DD-103	BYA10S1	CCD-103	B-110	5HK-S10
C61	.01		BPD-01	DD-103	BYA10S1	CCD-103	B-110	5HK-S10
C62	.001		EF-001	MFT-1000		CCF-102	CT280A	
C63	.001		EF-001	MFT-1000		CCF-102	CT280A	
C64	.01		BPD-01	DD-103	BYA10S1	CCD-103	B-110	5HK-S10
C65	.1 100V							
C66								

PARTS LIST AND DESCRIPTION (CONTINUED)

CONTROLS

All wattages 1/2 watt, or less, unless otherwise listed.

ITEM No.	USE	RESIST-ANCE	REPLACEMENT DATA				
			Lafayette PART No.	CENTRALAB PART No.	CLAROSTAT PART No.	CTS-IRC PART No.	MALLORY PART No.
R1	Volume & Switch	2meg	V-332A-2	B-76, KR-1	A47-2meg-Z, FS-3, SWE-12	Q13-139, 76-1	U55, US-26
R2	Squelch	3meg	V-331A-2	B-84, AK-31			U57, EB247
R3	Meter Adjust	200Ω 2W	P325-3	WN-201	A-43-200, FKS-1/4	WH-200, SK-5	

COILS (RF-IF)

ITEM No.	USE	REPLACEMENT DATA					NOTES
		Lafayette PART No.	MERIT PART No.	MILLER PART No.	STANCOR PART No.	WORKMAN PART No.	
L1	TV Trap						
L2	Antenna Load						
L3	RF Bandpass	T188-1					
L4	Rec. Oscillator	T-189-3					
L5	Crystal Feedback (6.8uh)						
L6	1st IF	1-110-5					
L7	2nd IF	1-110-5					
L8	3rd IF	1-110-5					
L9	Transmitter Osc.	190-1					
L10	RF Choke (500uh)		TV-188	6174	RTC-8592	T324	
L11	RF Choke (500uh)		TV-188	6174	RTC-3592	T324	
L12	RF Choke (.56uh)						
L13	Hash Choke(30uh)	187-1					

TRANSFORMER (POWER)

ITEM No.	RATING			REPLACEMENT DATA					NOTES
	PRI.	SEC. 1	SEC. 2	Lafayette PART No.	MERIT PART No.	STANCOR PART No.	THORDARSON PART No.	TRIAD PART No.	
T1	117VAC @ .5A(or) 12.6VCT @ 2.5A	105V @ .080A	12.6V @ * 1.8A	PTV-183-2					* 117 Volts operation only.

TRANSFORMER (AUDIO OUTPUT)

ITEM No.	IMPEDANCE		REPLACEMENT DATA					NOTES
	PRI.	SEC.	Lafayette PART No.	MERIT PART No.	STANCOR PART No.	THORDARSON PART No.	TRIAD PART No.	
T2	10.7K Tap @ 4600Ω	3-4Ω	T-184-1					

SPEAKER

ITEM No.	TYPE	REPLACEMENT DATA		NOTES
		Lafayette PART No.	QUAM PART No.	
SP1	4" PM 3-4Ω	S717-1	4A07	

VIBRATOR

ITEM No.	TYPE	INPUT VOLTS	FRE-QUENCY	REPLACEMENT DATA			NOTES
				Lafayette PART No.	CORNELL-DUBILIER PART No.	MALLORY PART No.	
M1	Interruptor	12.6	115v		6301	G-1601	

MISCELLANEOUS

ITEM No.	PART NAME	Lafayette PART No.	NOTES
M2	Variable Cap		1 Gang, Receiver Tuning
M3	Crystal		Receiver (Order channel desired)
M4	Crystal		Transmitter (Order channel desired)
M5	Switch		Channel Selector (Rotary Wafer Type)
M6	Switch		Receiver Tuning, Crystal -Tune (Wafer Type)
M7	Switch		Meter (STDP, Slide Type)
M8	Relay		Transmit - Receive
M9	Meter		Power Monitor or Signal Strength
	Microphone		Includes Spring Loaded Push-to-talk Switch

WIRING DATA

General-use Hook-up Wire .... Use BELDEN No. 8530 (Solid) Available in 12 Colors
8524 (Stranded) Available in 12 Colors
Shielded Antenna Lead ..... Use BELDEN No. 8214 Lowest Loss (RG-8/U Type)
8237 Low Loss (RG-8/U)
8240 (Solid) Miniature (RG-58/U)
8259 (Stranded) Miniature (RG-58A/U)
Coiled Microphone Cable ..... Use BELDEN No. 8497 3 Conductor- 1 Shielded for Press-to-Talk (Neoprene)
8496 3 Conductor- 1 Shielded for Press-to-Talk (Vinyl)
Ignition Noise Suppression .... Use BELDEN No. 7300-Series Spark-Plug Sets
Bonding Strap ..... Use BELDEN No. 8661 (3/8 In.)

TRADE NAME: Monitoradio Model TG-1

SUPPLIER: Regency Electronics, Inc.
7900 Pendleton Pike, Indianapolis, Ind.

TYPE SET: 2 Tube Tone Generator

POWER SUPPLY: 110 – 120 Volts AC, 60 Cycles

RATING: 10 Watts, .1 Amp. @ 117VAC

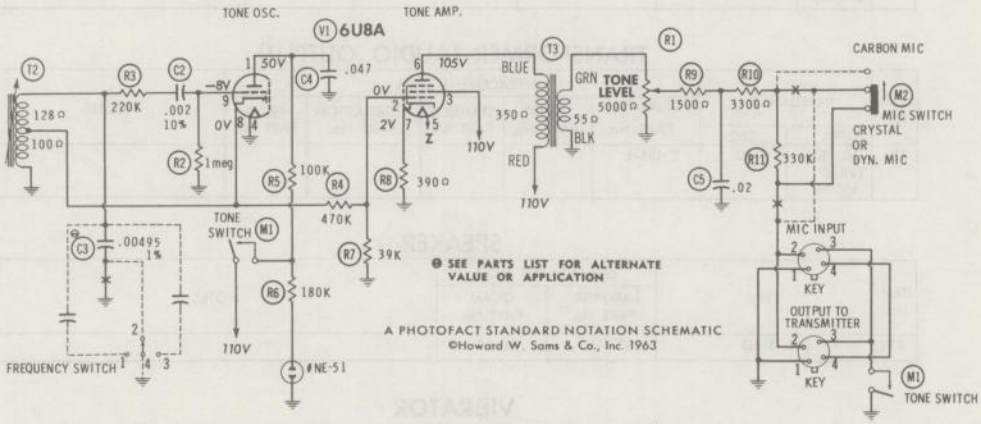

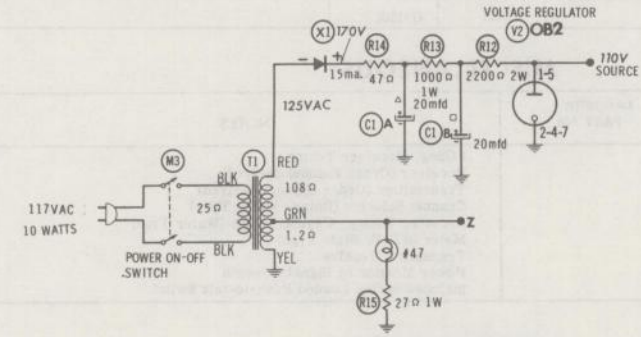

Pin No.	V1	V2
1	†100K	†3200Ω
2	39K	0Ω
3	†3200Ω	NC
4	FIL	0Ω
5	FIL	†3200Ω
6	†3550Ω	NC
7	390Ω	0Ω
8	100Ω	
9	1meg	

ALL READINGS MADE WITH TONE SWITCH ON.
† MEASURED FROM OUTPUT OF X1.
NC NO CONNECTION

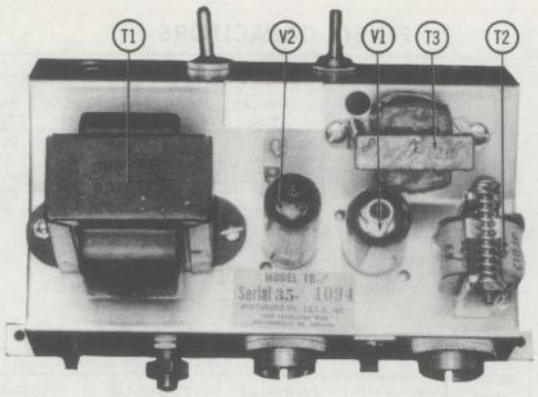

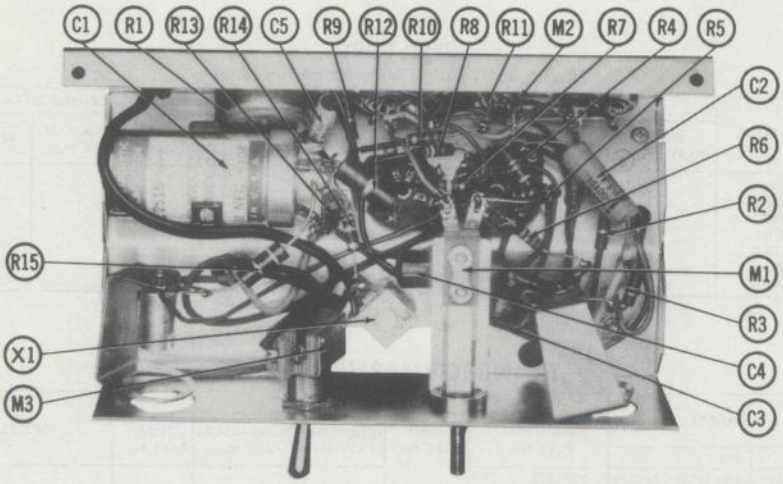

PARTS LIST AND DESCRIPTION

WIRING DATA

General-use Unshielded Hook-up Wire	Use BELDEN No. 8530 (Solid) Available in 12 Colors 8524 (Stranded) Available in 12 Colors
Power Cord	Use BELDEN No. 17106 (Plastic) or 17126 (Rubber) - 6 Ft. 17109 (Plastic) or 17129 (Rubber) - 9 Ft.
Power Cord (Interlock Type)	Use BELDEN No. 8874 (Rubber) or 8895 (Plastic)

TUBES

◆ AMPEREX ◆ GENERAL ELECTRIC ◆ RCA ◆ RAYTHEON ◆ SYLVANIA ◆					
ITEM No.	USE	TYPE	ITEM No.	USE	TYPE
V1	Tone Osc. -Tone Amp.	6U8A	V2	Voltage Regulator	OB2

POWER RECTIFIERS & SIGNAL DIODES

ITEM No.	MEASURED CURRENT	ORIGINAL Part or Type No.	RECTIFIERS			NOTES
			MALLORY PART No.	RCA PART No.	SARKES TARZIAN PART No.	
X1	.015A	1263A †	A200*	1N3194 *	50A †	HV Rectifier † Selenium * Silicon

ELECTROLYTIC CAPACITORS

ITEM No.	RATING		REPLACEMENT DATA						
	CAP.	VOLT.	Monitoradio PART No.	AEROVOX PART No.	CORNELL-DUBILIER PART No.	GENERAL ELECTRIC PART No.	MALLORY PART No.	PYRAMID PART No.	SPRAGUE PART No.
C1A B	▲ 20 ■ 20	250 250	300-773-1	AFH2-26	B0210	XC2-13	FP217	TMD2235	TVL-2515

PARTS LIST AND DESCRIPTION (CONTINUED)

FIXED CAPACITORS

ITEM No.	RATING	REMARKS	REPLACEMENT DATA					
			AEROVOX PART No.	CENTRALAB PART No.	CORNELL-DUBILIER PART No.	ELMENCO PART No.	MALLORY PART No.	SPRAGUE PART No.
C2	.002 10% 600V	Note 1	BE6D2	DD-182	PM6D2	6DP-1-202	PVC-622	6TM-D20
C3	.00495 1%							
C4	.047 200V		P288N-047	DD-503	PM2S47	4DP-3-473	PVC-2147	2TM-S47
C5	.02 100V		P288N-02	DD-203	PM2S2	1DP-1-203	PVC-212	2TM-S20

Note 1. Factory Selected for 1500 CPS (.00775 1% for 1200 CPS. .0034 1% for 1800 CPS).

CONTROLS

All wattages 1/2 watt, or less, unless otherwise listed.

ITEM No.	USE	RESIST-ANCE	REPLACEMENT DATA				
			Monitoradio PART No.	CENTRALAB PART No.	CLAROSTAT PART No.	CTS-IRC PART No.	MALLORY PART No.
R1	Tone Level	5000Ω		ASF5-502-U			

RESISTORS

All wattages 1/2 watt, or less, unless otherwise listed.

ITEM No.	RATING	REPLACEMENT DATA		
		IRC PART No.	WORKMAN PART No.	REMARKS
R2	1meg			
R3	220K			
R4	470K			
R5	100K			
R6	180K			
R7	39K			
R8	390Ω			

ITEM No.	RATING	REPLACEMENT DATA		
		IRC PART No.	WORKMAN PART No.	REMARKS
R9	1500Ω			
R10	3300Ω			
R11	330K			
R12	2200Ω 2W			
R13	1000Ω 1W			
R14	47Ω			
R15	27Ω 1W			

TRANSFORMER (POWER)

ITEM No.	RATING		REPLACEMENT DATA					NOTES
	PRI.	SEC. 1	Monitoradio PART No.	MERIT PART No.	STANCOR PART No.	THORDARSON PART No.	TRIAD PART No.	
T1	117VAC @ .1A	130VAC@ .015ADC Tap@6.3VAC@ .46A	300-272					

TRANSFORMER (TONE)

ITEM No.	TURNS RATIO		REPLACEMENT DATA					NOTES
	PRI.	SEC.	Monitoradio PART No.	MERIT PART No.	STANCOR PART No.	THORDARSON PART No.	TRIAD PART No.	
T2	1.1	1	57013-6					

TRANSFORMER (AUDIO OUTPUT)

ITEM No.	IMPEDANCE		REPLACEMENT DATA					NOTES
	PRI.	SEC.	Monitoradio PART No.	Merit PART No.	Stancor PART No.	Thordarson PART No.	Triad PART No.	
T3	5000Ω	520Ω	300-720					

MISCELLANEOUS

ITEM No.	PART NAME	Monitoradio PART No.	NOTES
M1	Switch	(3004)	Tone
M2	Switch	(SS32)	Mic (SPDT Slide Type)
M3	Switch	(20902-DN)	Power On-Off (DPDT Toggle Type)

CABINETS & CABINET PARTS

(When Ordering Cabinets & Cabinet Parts, Specify Model, Chassis & Color)

NAME	PART NO.	DESCRIPTION
Knob	S-453-29	Black
Cabinet	500-397-1	

TRADE NAME: Pearce-Simpson Model Companion

SUPPLIER: Pearce-Simpson, Inc., Sales & Service Div.
1385 N.W. 27th Ave., Miami 35, Florida

TYPE SET: 7 Tube, 3 Transistor Transceiver

POWER SUPPLY: 110-120 Volts AC, 60 Cycles (or)
12 Volt Storage Battery

RATING: 65 Watts, .60 Amp.@117VAC (Transmit)
55 Watts, .52 Amp.@117VAC (Receive)
4.7 Amp.@12.6VDC (Transmit)
3.6 Amp.@12.6VDC (Receive)

TUNING RANGE: Any 5 CB Channels 1 thru 22
Receiver may be continuously tuned.

ALIGNMENT INSTRUCTIONS

ALIGNMENT INSTRUCTIONS—READ CAREFULLY BEFORE ATTEMPTING ALIGNMENT

Suggested Alignment Tools:
A1 thru A6, A8 thru A12, A14, thru A18.....GENERAL CEMENT #5097, 8727 ....WALSCO #2515
A7..... GENERAL CEMENT #8272, 8276, 9298.. WALSCO #2515, 2516, 2518, 2519, 2525, 2541
A13..... GENERAL CEMENT #8282, 8606, 9295.. WALSCO #2526, 2543, 2544, 2545

RECEIVER ALIGNMENT

Connect DC probe of VTVM to point Ⓐ, common to ground.

SIGNAL GENERATOR	CHANNEL	ADJUST	REMARKS
High side thru .05mfd to pin 2 of V2, common to ground. (455KC Unmod.)		A1, A2, A3, A4, A5, A6	Adjust for maximum deflection.
High side to antenna terminal common to ground. Tune to channel frequency.	1 (26.965MC)	A7	Rotate channel selector switch to the "External" position. Adjust for maximum deflection.
"	12 (27.105MC)	A8, A9, A10, A11	Adjust for maximum deflection.
"	20 (27.205MC)	A12	"

TRANSMITTER ALIGNMENT

ONLY THOSE PERSONS PROPERLY LICENSED ARE PERMITTED TO MAKE REPAIRS OR ADJUSTMENTS WHICH MAY RESULT IN ILLEGAL OPERATION. (REFER TO FCC RULES & REGULATIONS PART 19, SUBPART D, SECTION 19.71)

SPECIAL INSTRUCTIONS	INDICATOR	ADJUST	REMARKS
Place channel selector switch on or near the centermost channel as covered by the unit.	Connect dummy load and RF wattmeter to antenna terminal. Common to ground.	A13	Connect DC probe of VTVM to point Ⓑ, common to ground. Key transmitter. Adjust A13 for maximum VTVM indication. Rock A13 to each side of peak, noting rate of dropoff. Set A13 just below peak on side of gradual dropoff.
"	"	A14, A15, A16	Adjust for maximum output.
"	Indicator lamp on front panel.	A17	Connect antenna. Adjust for maximum lamp brilliance. Slight readjustment of A16 may be necessary.
"	"	A18	Adjust for desired lamp brilliance.

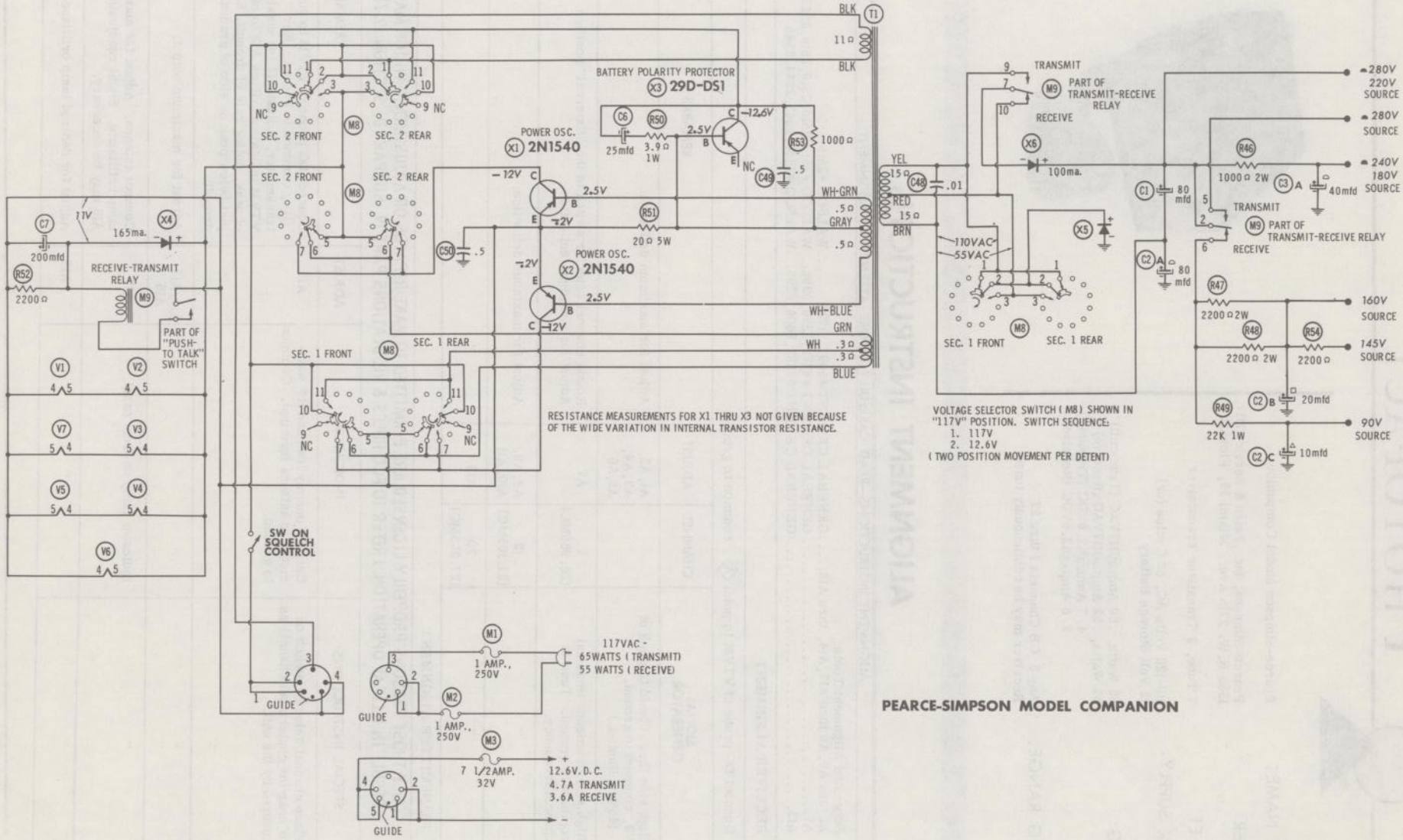

PEARCE-SIMPSON MODEL COMPANION

POWER SUPPLY

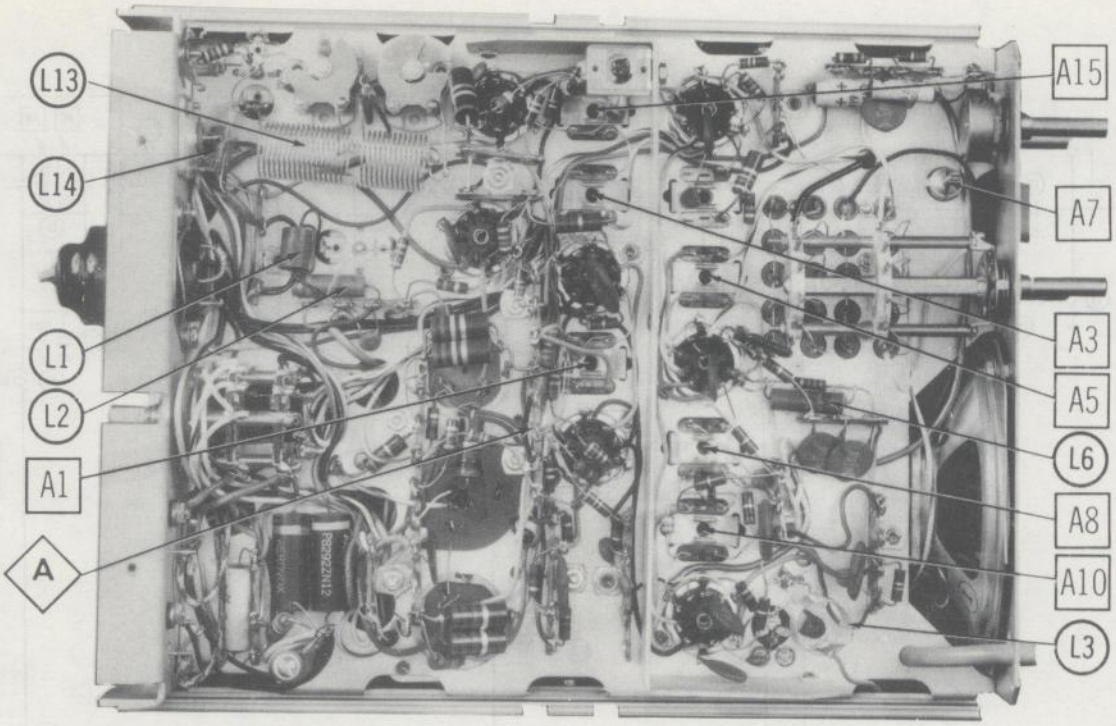
L13
L14
L1
L2
A1
A
A15
A7
A3
A5
L6
A8
A10
L3

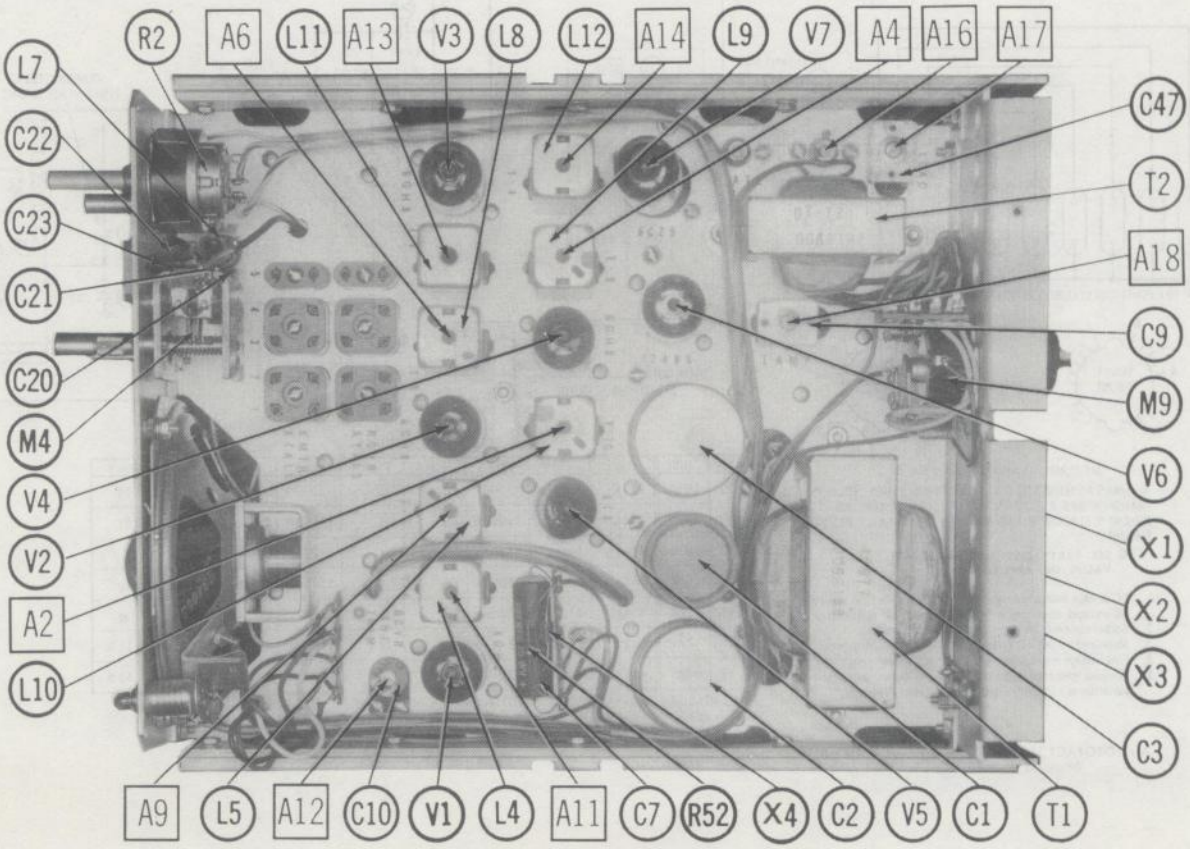
R2
A6
L11
A13
V3
L8
L12
A14
L9
V7
A4
A16
A17
L7
C22
C23
C21
C20
M4
V4
V2
A2
L10
C47
T2
A18
C9
M9
V6
X1
X2
X3
C3
A9
L5
A12
C10
V1
L4
A11
C7
R52
X4
C2
V5
C1
T1

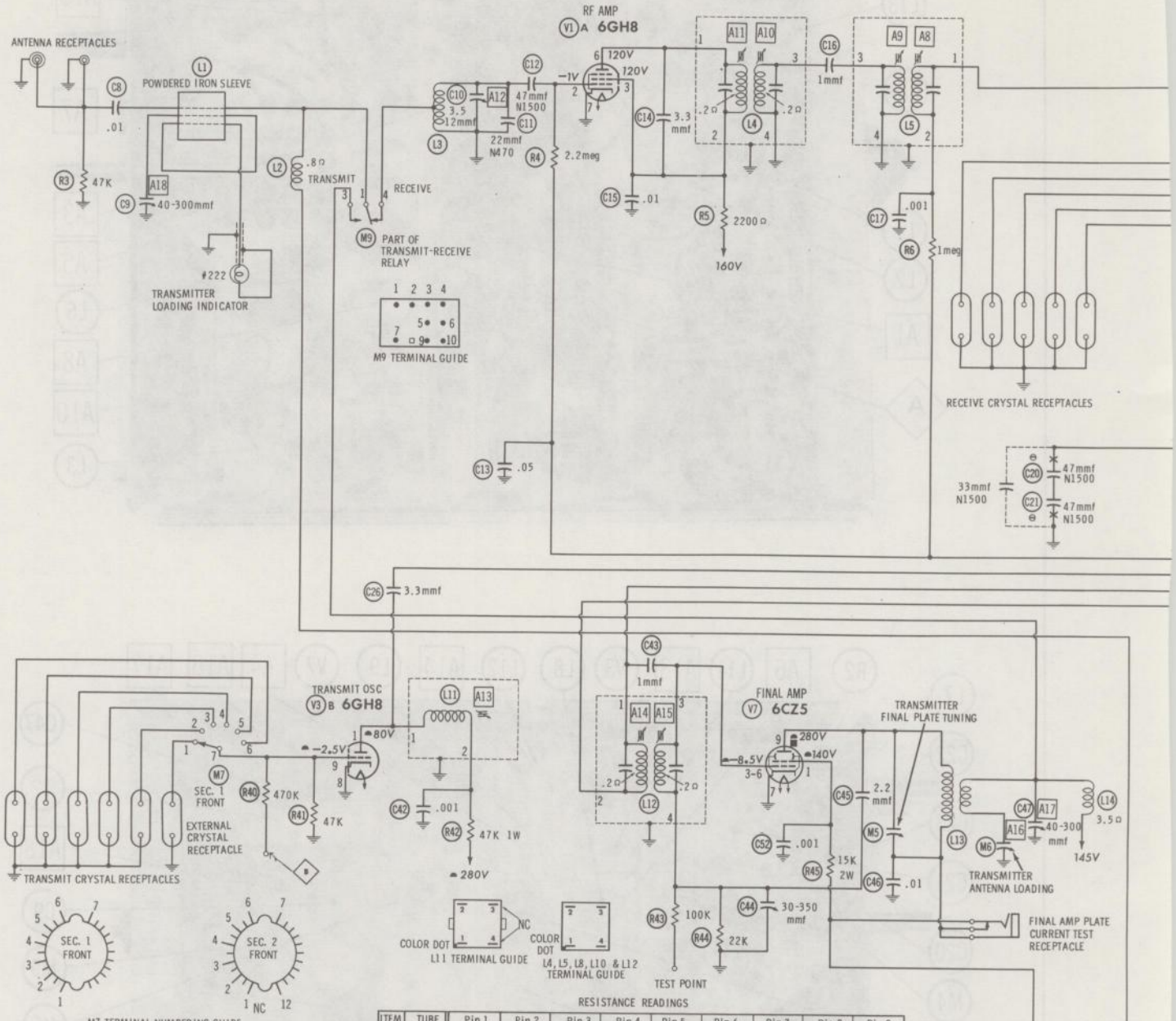

NUMBERS ASSIGNED TO COILS, SWITCHES, PLUGS, SOCKETS, AND TRANSFORMERS ARE TO FACILITATE CIRCUIT TRACING OR COMPONENT REPLACEMENT AND MAY NOT NECESSARILY BE FOUND ON THE UNIT.

⊖ SEE PARTS LIST FOR ALTERNATE VALUE OR APPLICATION

1. DC voltage measurements taken with vacuum tube voltmeter; AC voltages measured with 1000 ohm per volt voltmeter.
2. Socket connections are shown as bottom views.
3. Measured values are from socket pin to common ground.
4. Line voltage maintained at 117 volts for voltage readings.
5. Nominal tolerance of component values makes possible a variation of ±15% in voltage and resistance readings.

RESISTANCE READINGS

ITEM	TUBE	Pin 1	Pin 2	Pin 3	Pin 4	Pin 5	Pin 6	Pin 7	Pin 8	Pin 9
V1	6GH8	†70K	3.3meg	†3000Ω	FIL	FIL	†3000Ω	0Ω	1000Ω	250K
V2	6GH8	†22K	2meg	†3000Ω	FIL	FIL	†3000Ω	0Ω	0Ω	100K
V3	6GH8	▲†47K	1meg	†3200Ω	FIL	FIL	†3200Ω	0Ω	0Ω	47K
V4	6GH8	†48K	9Ω	†3000Ω	FIL	FIL	†3000Ω	470Ω	9000Ω	2meg
V5	6T8A	150K	47K	1.6meg	FIL	FIL	0Ω	0Ω	1.7meg	1meg
V6	12AB5	†1000Ω	NC	47K	FIL	FIL	47K	450Ω	†1000Ω	†110Ω
V7	6CZ5	▲†15K	NC	22K	FIL	FIL	22K	0Ω	NC	■140Ω

ALL READINGS MADE IN "RECEIVE" POSITION UNLESS OTHERWISE DESIGNATED.
† MEASURED FROM OUTPUT OF X6.
■ MEASURED AT FINAL AMP PLATE CURRENT TEST RECEPTACLE.
▲ TAKEN IN "TRANSMIT" POSITION.
NC NO CONNECTION

A PHOTOFACT STANDARD NOTATION SCHEMATIC

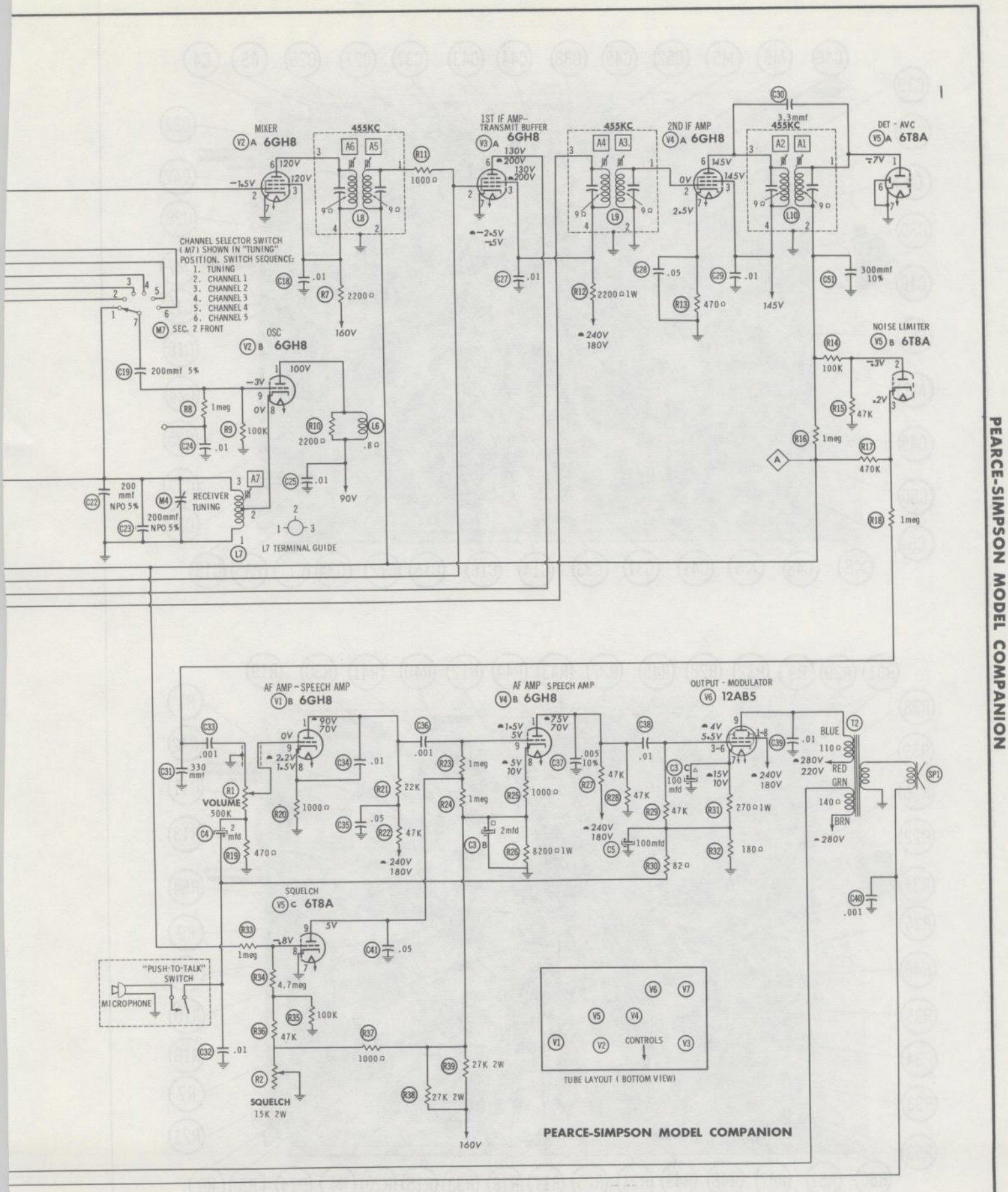
MIXER
V2 A 6GH8
455KC
1ST IF AMP-TRANSMIT BUFFER
V3 A 6GH8
2ND IF AMP
V4 A 6GH8
DET - AVC
V5 A 6T8A
CHANNEL SELECTOR SWITCH (M7) SHOWN IN "TUNING" POSITION. SWITCH SEQUENCE:
1. TUNING
2. CHANNEL 1
3. CHANNEL 2
4. CHANNEL 3
5. CHANNEL 4
6. CHANNEL 5
M7 SEC. 2 FRONT
OSC
V2 B 6GH8
NOISE LIMITER
V5 B 6T8A
RECEIVER TUNING
L7 TERMINAL GUIDE
AF AMP-SPEECH AMP
V1 B 6GH8
AF AMP SPEECH AMP
V4 B 6GH8
OUTPUT - MODULATOR
V6 12AB5
VOLUME 500K
SQUELCH
V5 C 6T8A
"PUSH-TO-TALK" SWITCH
MICROPHONE
SQUELCH 15K 2W
160V
TUBE LAYOUT (BOTTOM VIEW)
CONTROLS
PEARCE-SIMPSON MODEL COMPANION

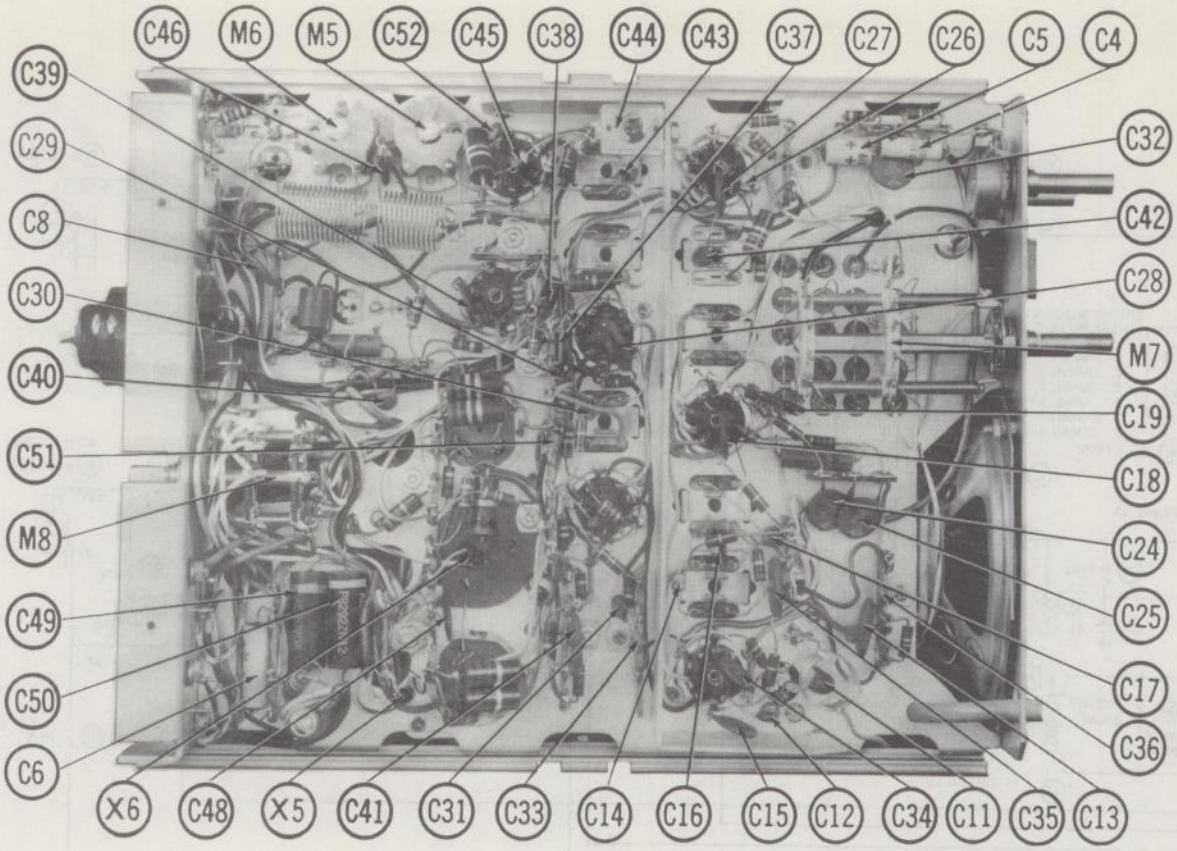
C46
M6
M5
C52
C45
C38
C44
C43
C37
C27
C26
C5
C4
C39
C29
C8
C30
C40
C51
M8
C49
C50
C6
C32
C42
C28
M7
C19
C18
C24
C25
C17
C36
X6
C48
X5
C41
C31
C33
C14
C16
C15
C12
C34
C11
C35
C13

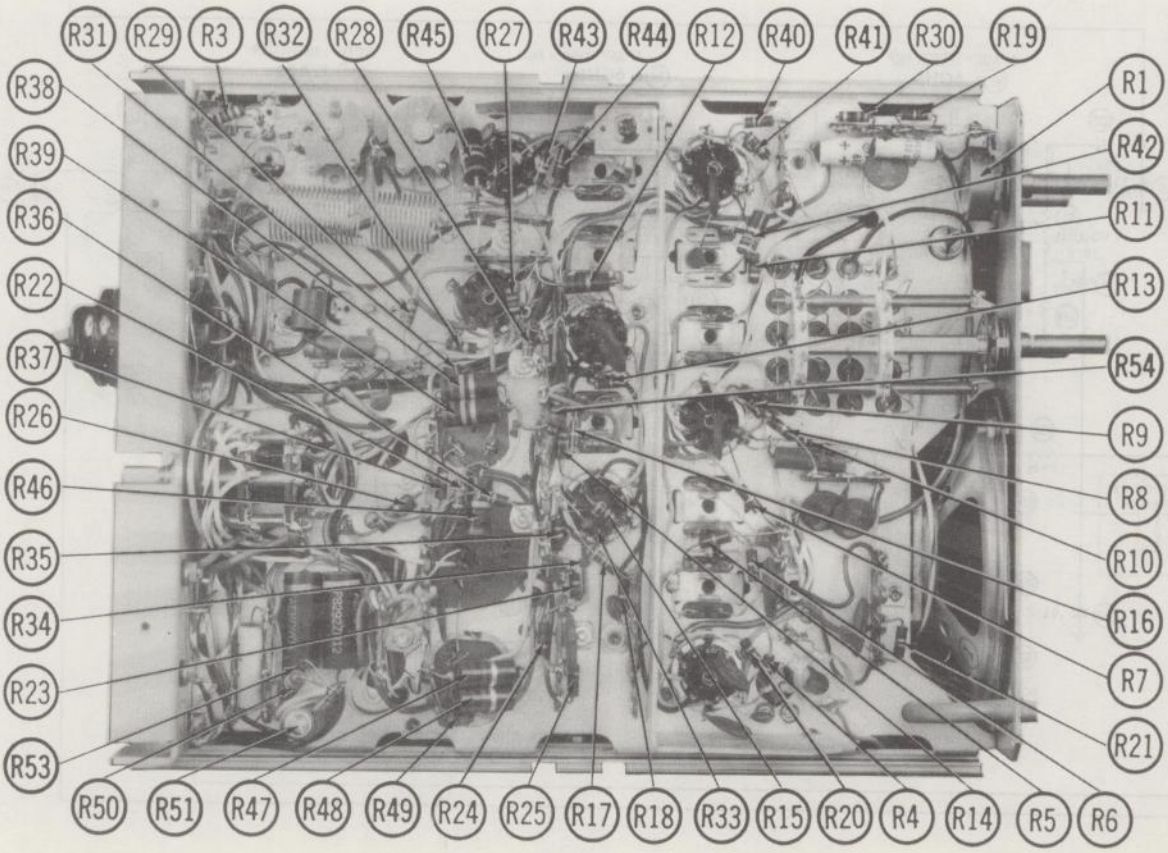
R31
R29
R3
R32
R28
R45
R27
R43
R44
R12
R40
R41
R30
R19
R38
R39
R36
R22
R37
R26
R46
R35
R34
R23
R53
R1
R42
R11
R13
R54
R9
R8
R10
R16
R7
R21
R50
R51
R47
R48
R49
R24
R25
R17
R18
R33
R15
R20
R4
R14
R5
R6

PARTS LIST AND DESCRIPTION

WIRING DATA

General-use Hook-up Wire	Use BELDEN No.	8530 (Solid) Available in 12 Colors 8524 (Stranded) Available in 12 Colors
Shielded Antenna Lead	Use BELDEN No.	8214 Lowest Loss (RG-8/U Type) 8237 Low Loss (RG-8/U) 8240 (Solid) Miniature (RG-58/U) 8259 (Stranded) Miniature (RG-58A/U)
Coiled Microphone Cable	Use BELDEN No.	8497 3 Conductor- 1 Shielded for Press-to-Talk (Neoprene) 8496 3 Conductor- 1 Shielded for Press-to-Talk (Vinyl)
Ignition Noise Suppression	Use BELDEN No.	7300-Series Spark-Plug Sets
Bonding Strap	Use BELDEN No.	8661 (3/8 In.)

TUBES

◆ AMPEREX ◆ GENERAL ELECTRIC ◆ RCA ◆ RAYTHEON ◆ SYLVANIA ◆						
ITEM No.	USE	TYPE		ITEM No.	USE	TYPE
V1	RF Amp.-AF Amp.-Speech Amp.	6GH8		V4	2nd IF Amp.-AF Amp.	6GH8
V2	Mixer-Osc.	6GH8		V5	Det.-AVC-Noise Limiter-Squelch	6T8A
V3	1st IF Amp.-Trans. Buffer-Trans. Osc.	6GH8		V6	Output-Modulator	12AB5
				V7	Final Amp.	6CZ5

TRANSISTORS

ITEM No.	ORIG. TYPE	USE	REPLACEMENT DATA			NOTES
			DELCO PART No.	GENERAL ELECTRIC PART No.	RCA PART No.	
X1	2N1540	Power Oscillator	DS503	GE-3		PNP
X2	2N1540	Power Oscillator	DS503	GE-3		PNP
X3	29D-PS1	Battery Polarity Protector	DS520	GE-3		PNP

POWER RECTIFIERS & SIGNAL DIODES

ITEM No.	CURRENT RATING (Measured)	ORIGINAL Part or Type No.	RECTIFIERS		DIODES	NOTES
			RCA PART No.	SARKES TARZIAN PART No.		
X4	.165A	21B-14	1N3193	F2		Relay (1N2073)
X5	.100A	21B-17	1N3195	F6		HV Rectifier
X6	.100A	21B-17	1N3195	F6		HV Rectifier

ELECTROLYTIC CAPACITORS

ITEM No.	RATING		REPLACEMENT DATA						
	CAP.	VOLT.	Pearce-Simpson PART No.	AEROVOX PART No.	CORNELL-DUBILIER PART No.	GENERAL ELECTRIC PART No.	MALLORY PART No.	PYRAMID PART No.	SPRAGUE PART No.
C1	80	250	4F-36			XC2-24			TVL-2520
C2A	▲80	250	4F-37	AFH3-25-40	C0180	XC3-12		TMT3301	TVL-3582
B	■20	250							
C	▲10	250							
C3A	▲40	400	4F-38						TVLS-3651*
B	■2	100							
C	▲100	25							
C4	2	25	4F-16	PTT75	NLW2-50	MT1-1	TT50X2	MLV2-50	TE-1201
C5	100	15	4F-19	PTT73	NLW100-15	MT1-19	TT15X100	MLV100-15	TE-1162
C6	25	15	4F-17	PTT69	NLW25-15	MT1-10	TT15X25	MLV25-15	TE-1157.1
C7	200	20	4F-31	PRS1280	BR250-25	QT1-27	TC-50025	TD-250-50	TVA-1208

* Not normally in distributor's stock. Available thru distributor on order to manufacturer.

FIXED CAPACITORS

ITEM No.	RATING	REMARKS	REPLACEMENT DATA					
			AEROVOX PART No.	CENTRALAB PART No.	CORNELL-DUBILIER PART No.	ELMENCO PART No.	MALLORY PART No.	SPRAGUE PART No.
C8	.01		BPD-01	DD-103	BYA10S1	CCD-103	GP-110	10TS-S10
C9	40-300							
C10	3.5-12	#4C-15		827B				10TCS-Q22
C11	22 N470							
C12	47 N1500							
C13	.05		BPD-05	DD-503	CUB6S5	6DP-3-503	GP-150	
C14	3.3		NPO-SI 3.3	TCZ-3R3	C10V33C	CCTO-3R3	CNO-533	10TS-V33
C15	.01		BPD-01	DD-103	BYA10S1	CCD-103	GP-110	10TS-S10
C16	1		NPO-SI 1	TCZ-1			CNO-510	10TCC-V10
C17	.001		BPD-001	DD-102	BYA10D1	CCD-102	GP-210	10TS-D10
C18	.01		BPD-01	DD-103	BYA10S1	CCD-103	GP-110	10TS-S10
C19	200 200 5%		ADM-15-201	DTZ-200	C10T2U	CM-20-201J	CNO-320	10TCC-T20
C20	47 N1500	Note 1	N750-DI 47	DTN-47	C10Q47U	CCTN-470	CN7-447	10TCU-Q47
C21	47 N1500	Note 1	N750-DI 47	DTN-47	C10Q47U	CCTN-470	CN7-447	10TCU-Q47
C22	200 ±5% NPO			DTZ-200			CNO-320	10TCC-T20
C23	200 ±5% NPO			DTZ-200			CNO-320	10TCC-T20
C24	.01		BPD-01	DD-103	BYA10S1	CCD-103	GP-110	10TS-S10
C25	.01		BPD-01	DD-103	BYA10S1	CCD-103	GP-110	10TS-S10
C26	3.3		NPO-SI 3.3	TCZ-3R3	C10V33C	CCTO-3R3	GP-533	10TS-V33
C27	.01		BPD-01	DD-103	BYA10S1	CCD-103	GP-110	10TS-S10
C28	.05		BPD-05	DD-503	CUB6S5	6DP-3-503	GP-150	6PS-S50
C29	.01		BPD-01	DD-103	BYA10S1	CCD-103	GP-110	10TS-S10
C30	3.3		NPO-SI 3.3	TCZ-3R3	C10V33C	CCTO-3R3	GP-533	10TS-V33
C31	330		DI-330	DD-331	L10T33	CCD-331	GP-333	10TS-T33
C32	.01		BPD-01	DD-103	BYA10S1	CCD-103	GP-110	10TS-S10
C33	.001		BPD-001	DD-102	BYA10D1	CCD-102	GP-210	10TS-D10
C34	.01		BPD-01	DD-103	BYA10S1	CCD-103	GP-110	10TS-S10
C35	.05		BPD-05	DD-503	CUB6S5	6DP-3-503	GP-150	6PS-S50
C36	.001		BPD-001	DD-102	BYA10D1	CCD-102	GP-210	10TS-D10
C37	.005 10%		DI-5000			CCD-502	GP-250	10TS-D50
C38	.01		BPD-01	DD-103	BYA10S1	CCD-103	GP-110	10TS-S10
C39	.01		BPD-01	DD-103	BYA10S1	CCD-103	GP-110	10TS-S10
C40	.001		BPD-001	DD-102	BYA10D1	CCD-102	GP-210	10TS-D10
C41	.05		BPD-05	DD-503	CUB6S5	6DP-3-503	GP-150	6PS-S50
C42	.001		BPD-001	DD-102	BYA10D1	CCD-102	GP-210	10TS-D10
C43	1		NPO-SI 1	TCZ-1			CNO-510	10TCC-V10
C44	30-350					465		
C45	2.2		NPO-SI 2.2	DTZ-2R2	C10V22C	CCTO-2R2	CNO-522	10TCC-V22
C46	.01		BPD-01	DD-103	BYA10S1	CCD-103	GP-110	10TS-S10
C47	40-300					465		
C48	.01		BPD-01	DD-103	BYA10S1	CCD-103	GP-110	10TS-S10
C49	.5 200V		P288N-5		CUB2P5	2DP-5-504	GEM-205	2PS-P50
C50	.5 200V		P288N-5		CUB2P5	2DP-5-504	GEM-205	2PS-P50
C51	300 10%		CI-300	DD-301		CCD-301	GP-330	10TS-Q30
C52	.001		BPD-001	DD-102	BYA10D1	CCD-102	GP-210	10TS-D10

Note 1. C20 and C21 may be replaced with one 33mmf N1500 unit in some versions.
\# Pearce-Simpson Part Number.

CONTROLS

All wattages 1/2 watt, or less, unless otherwise listed.

ITEM No.	USE	RESIST-ANCE	REPLACEMENT DATA				
			Pearce-Simpson PART No.	CENTRALAB PART No.	CLAROSTAT PART No.	CTS-IRC PART No.	MALLORY PART No.
R1	Volume	500K	20H-18	B-60, or (F2-500K,SU204)	A47-500K -Z, RS-3	Q13-133, PQ, or (BU2, CF25, SS5, DC1)*	U-48 or (UA55A, SL2500)
R2	Squelch & Switch	15K 2W	20H-19			WP15000, 76-12	

* "SNAPTROL"

PARTS LIST AND DESCRIPTION (CONTINUED)

RESISTORS

All wattages 1/2 watt, or less, unless otherwise listed.

ITEM No.	RATING	REPLACEMENT DATA		
		IRC PART No.	WORKMAN PART No.	REMARKS
R3	47K			
R4	2.2meg			
R5	2200Ω			
R6	1meg			
R7	2200Ω			
R8	1meg			
R9	100K			
R10	2200Ω			
R11	1000Ω			
R12	2200Ω 1W			
R13	470Ω			
R14	100K			
R15	47K			
R16	1meg			
R17	470K			
R18	1meg			
R19	470Ω			
R20	1000Ω			
R21	22K			
R22	47K			
R23	1meg			
R24	1meg			
R25	1000Ω			
R26	8200Ω 1W			
R27	47K			
R28	47K			
R29	47K			
R30	82Ω			
R31	270Ω 1W			
R32	180Ω			
R33	1meg			
R34	4.7meg			
R35	100K			
R36	47K			
R37	1000Ω			
R38	27K 2W			
R39	27K 2W			
R40	470K			
R41	47K			
R42	47K 1W			
R43	100K			
R44	22K			
R45	15K 2W			
R46	1000Ω 2W			
R47	2200Ω 2W			
R48	2200Ω 2W			
R49	22K 1W			
R50	3.9Ω 1W			
R51	20Ω 5W	PW5-20	5W-SQ-20	
R52	2200Ω			
R53	1000Ω			
R54	2200Ω			

COILS (RF-IF)

ITEM No.	USE	REPLACEMENT DATA					NOTES
		Pearce-Simpson PART No.	MERIT PART No.	MILLER PART No.	STANCOR PART No.	WORKMAN PART No.	
L1	Indicator Cpl.						
L2	RF Choke(5.6uh)	12A-58					
L3	Rec. Ant. Coil	12A-75					
L4	RF (27MC)	12A-55					
L5	RF (27MC)	12A-55					
L6	RF Choke(5.6uh)	12A-58					
L7	Rec. Osc.	12A-91					
L8	1st IF	12A-26					
L9	2nd IF	12A-26					
L10	3rd IF	12A-26					
L11	Trans. Osc. Plate	12A-67					
L12	Trans. Osc. Cpl.	12A-55					
L13	Final	12A-74					
L14	RF Choke(73uh)	12A-36					

TRANSFORMER (POWER)

ITEM No.	RATING			REPLACEMENT DATA					NOTES
	PRI.	SEC. 1	SEC. 2	Pearce-Simpson PART No.	MERIT PART No.	STANCOR PART No.	THORDARSON PART No.	TRIAD PART No.	
T1	117VAC @ .6A or 12.6VDC @ 4.7A	110VAC .38A	12.6VAC @ 1.6A	12B-77					

TRANSFORMER (AUDIO OUTPUT)

ITEM No.	IMPEDANCE		REPLACEMENT DATA					NOTES
	PRI.	SEC. 1	Pearce-Simpson PART No.	Merit PART No.	Stancor PART No.	Thordarson PART No.	Triad PART No.	
T2	5000Ω	3-4Ω	12B-47					
		SEC. 2						
		5000Ω						

SPEAKER

ITEM No.	TYPE			REPLACEMENT DATA		NOTES
	SIZE	FIELD	V. C. IMP.	Pearce-Simpson PART No.	QUAM PART No.	
SP1	4"	PM	3-4Ω	25A12*	4A07	* Alternate Part #25A-13

FUSES

ITEM No.	TYPE	RATING	REPLACEMENT DATA					
			Pearce-Simpson PART No.		LITTELFUSE PART No.		BUSS PART No.	
			FUSE	HOLDER	FUSE	HOLDER	FUSE	HOLDER
M1	3AG	1A 250V	8A-1 ①	23D-29	312001		AGC 1	
M2	3AG	1A 250V	8A-1 ①	23D-29	312001		AGC1	
M3	3AG	7½A 32V	②	31H-4	31107.5	155020	AGC 7½	HHJ-B

① AC ② DC

MISCELLANEOUS

ITEM No.	PART NAME	Pearce-Simpson PART No.	NOTES
M4	Tuning Cap	4C-21	Receiver Tuning
M5	Variable Capacitor	4C-14	Transmitter Final Plate Tuning
M6	Variable Capacitor	4C-14	Transmitter Antenna Loading
M7	Switch	27A-44	Channel Selector (Rotary Wafer Type)
M8	Switch	27A-22A	Voltage Selector (Rotary Wafer Type)
M9	Relay	19B-16	Receive-Transmit (12 Volt, 70Ω)
	Microphone	16A-8G	With Coil Cord

CABINETS & CABINET PARTS

(When Ordering Cabinets & Cabinet Parts, Specify Model, Chassis & Color)

NAME	PART NO.	DESCRIPTION
Knobs	13A-43	Control
Knob	13A-30	Power Selector
Control Panel	7K-5	Molded Plastic
Cabinet Half	3F-20	Molded Implex

TRADE NAME: Raytheon Model Ray-Tel TWR-2

SUPPLIER: Raytheon Co., Distributor Products Div.
411 Providence Turnpike, Westwood, Mass.

TYPE SET: 10 Tube Citizens Band Transceiver

POWER SUPPLY: 110 – 120 Volts AC, 60 Cycles (or)
6 (or) 12 Volt Storage Battery

RATING: 65 Watts, .6 A@117VAC, 60 Cycles
5 A@12.6VDC (or) 10A@6.3VDC

TUNING RANGE: Any 5 Citizens Band Channels 1 thru 23

ALIGNMENT INSTRUCTIONS

RECEIVER ALIGNMENT

Connect output meter across voice coil.
Volume control should be at maximum position. Output of signal generator should be no higher than necessary to obtain an output reading.

SIGNAL GENERATOR	CHANNEL	ADJUST	REMARKS
High side thru .01mfd to pin 7 of V3, low side to chassis. (Tune to 455KC, 400~ Mod.)	Any	A1, A2, A3, A4, A5, A6, A7, A8	Adjust for maximum output.
High side thru .01mfd to pin 7, of V2, low side to chassis. (Tune to 6MC, 400~ Mod.)	"	A9, A10	Adjust for maximum output.
High side thru .01mfd to antenna receptacle, low side to chassis. (Tune to channel freq.)	Center Channel Used.	All	Adjust for maximum output.

TRANSMITTER ALIGNMENT

ONLY THOSE PERSONS PROPERLY LICENSED ARE PERMITTED TO MAKE REPAIRS OR ADJUSTMENTS WHICH MAY RESULT IN ILLEGAL OPERATION. (REFER TO FCC RULES & REGULATIONS PART 19, SUBPART D, SECTION 19.71)

Best results will be obtained when adjusting A13 and A14 if the antenna normally used is connected and the unit is as nearly in the cabinet as possible.

A secondary frequency standard should be used to check accuracy. C39 is provided for precise adjustment of frequency.

INDICATOR	ADJUST	REMARKS
0-100DC milliammeter connected to meter jack on rear of chassis.	A12	Key transmitter. Adjust for maximum deflection.
"	A13	Turn clockwise finger tight.
"	A14	Adjust for MINIMUM deflection.
"	A13	Turn counterclockwise slightly.
"	A14	Readjust for MINIMUM deflection. Repeat adjustments of A13 and A14 until any further adjustment of A13 results in a meter dip. Meter should indicate approximately 21ma.

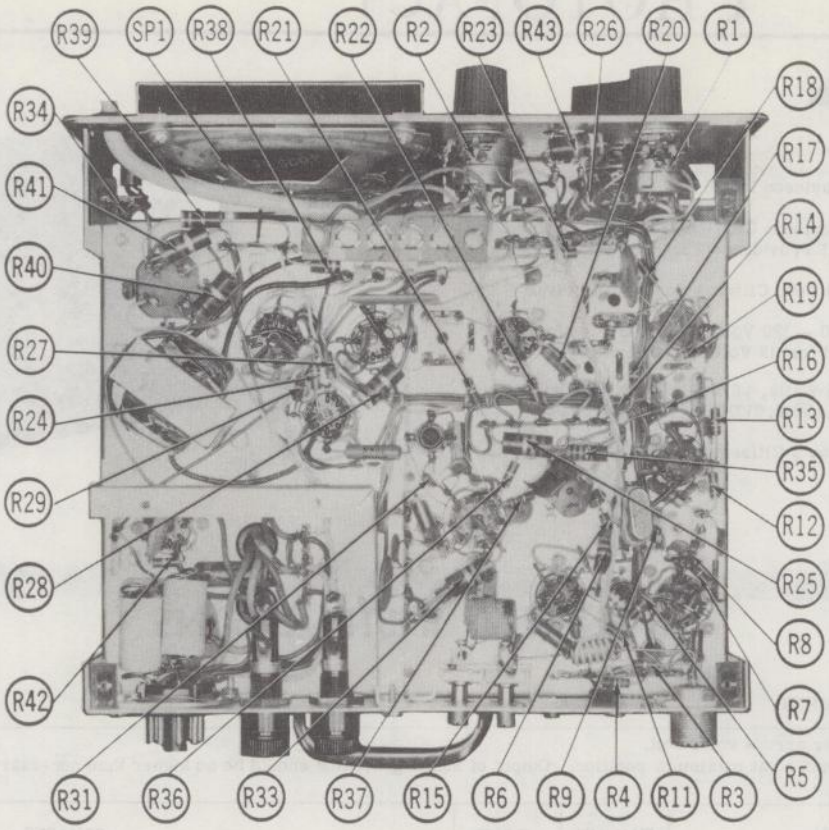
R39
SP1
R38
R21
R22
R2
R23
R43
R26
R20
R1
R18
R17
R14
R19
R16
R13
R35
R12
R25
R8
R7
R5
R3
R11
R4
R9
R6
R15
R37
R33
R36
R31
R42
R28
R29
R24
R27
R40
R41
R34

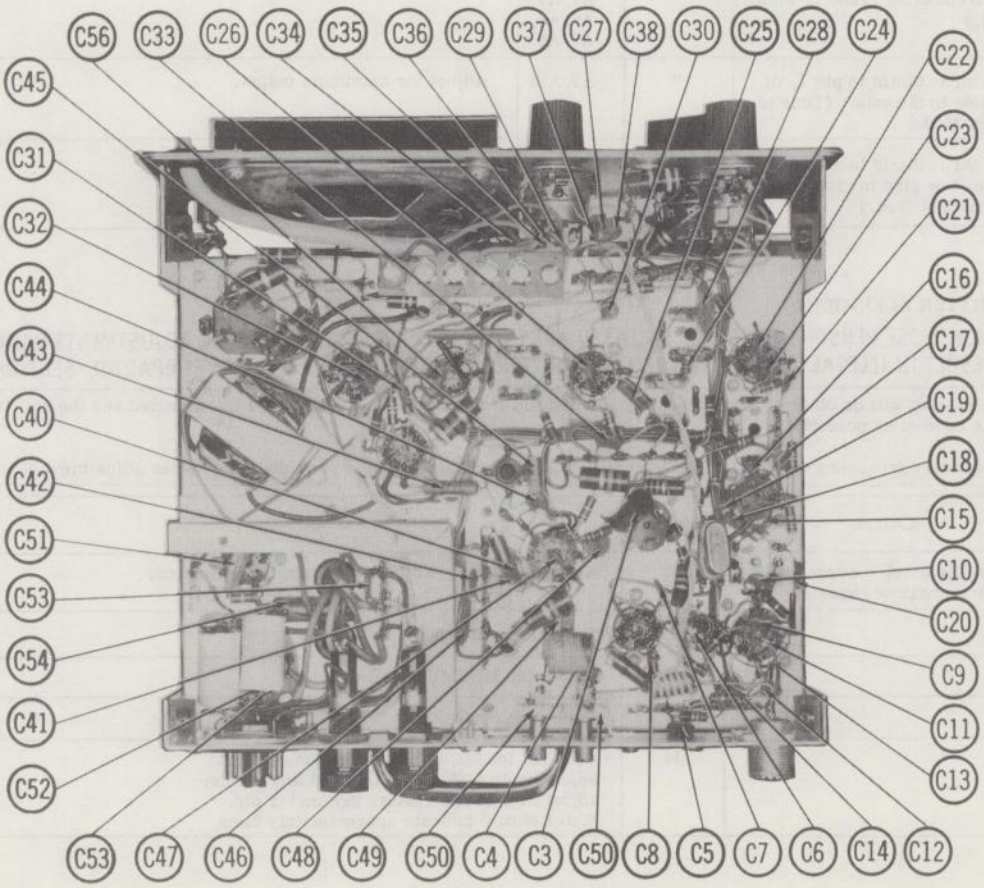
C56
C33
C26
C34
C35
C36
C29
C37
C27
C38
C30
C25
C28
C24
C22
C23
C21
C16
C17
C19
C18
C15
C10
C20
C9
C11
C13
C12
C14
C6
C7
C5
C8
C50
C3
C4
C50
C49
C48
C46
C47
C53
C52
C41
C54
C53
C51
C42
C40
C43
C44
C32
C31
C45

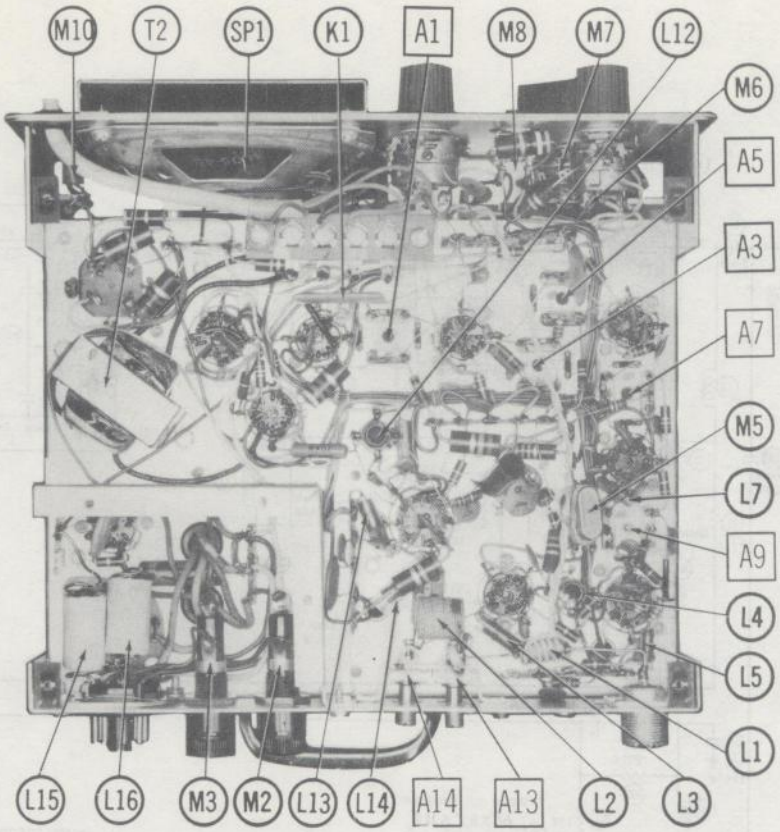
M10
T2
SP1
K1
A1
M8
M7
L12
M6
A5
A3
A7
M5
L7
A9
L4
L5
L1
L15
L16
M3
M2
L13
L14
A14
A13
L2
L3

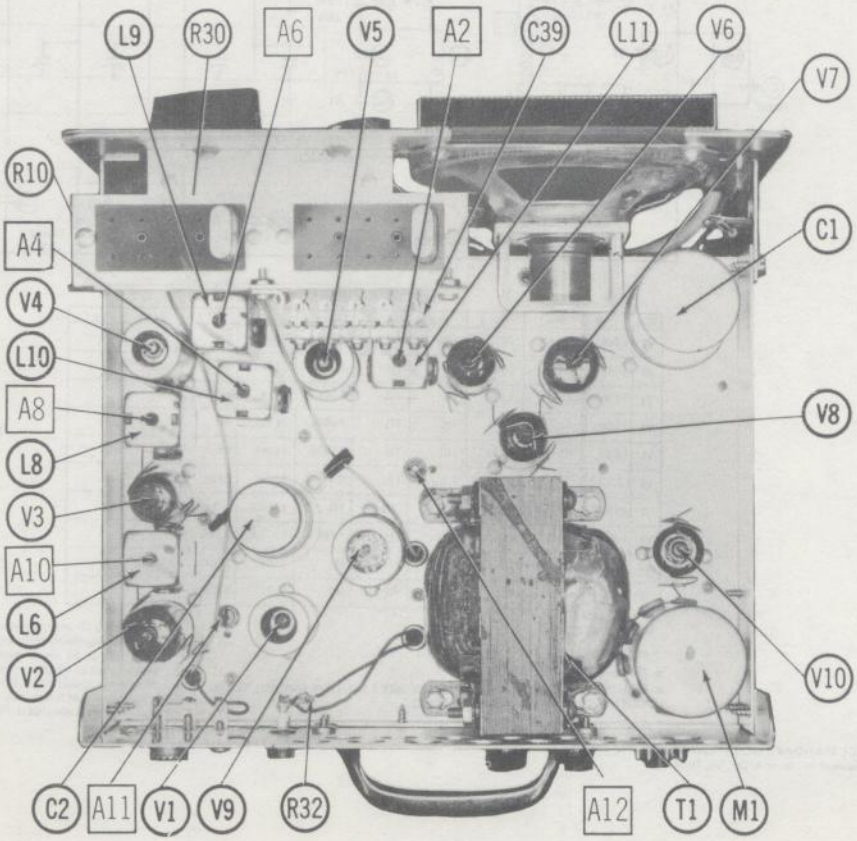
L9
R30
A6
V5
A2
C39
L11
V6
V7
R10
A4
C1
V4
L10
A8
V8
L8
V3
A10
L6
V2
V10
C2
A11
V1
V9
R32
A12
T1
M1

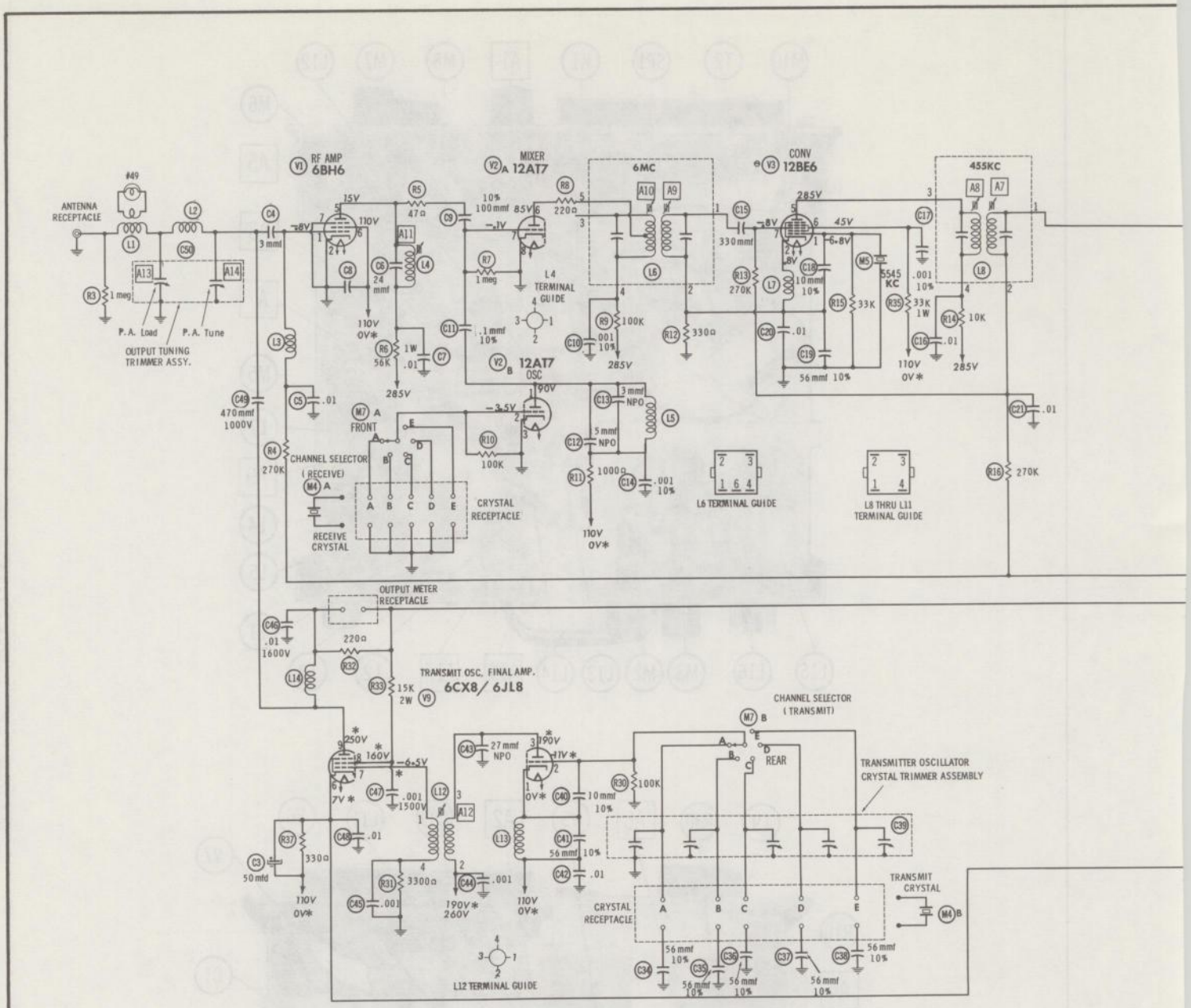

RESISTANCE READINGS

ITEM	TUBE	Pin 1	Pin 2	Pin 3	Pin 4	Pin 5	Pin 6	Pin 7	Pin 8	Pin 9
V1	6BH6	1 meg	0Ω	FIL	FIL	†56K	†26K	0Ω		
V2	12AT7	†26K	100K	0Ω	FIL	FIL	†100K	1 meg	0Ω	NC
V3	12BE6	33K	330Ω	FIL	FIL	†10K	†55K	1.3 meg		
V4	6BH6	1.1 meg	470Ω	FIL	FIL	†100K	†100K	0Ω		
V5	6BH6	†1 meg	330Ω	FIL	FIL	†100K	†100K	0Ω		
V6	12AL5	270K 2.5 meg	500K	FIL	FIL	0Ω	0Ω	270K		
V7	12AX7	†560K	†3.3 meg	22K	FIL	FIL	†560K	2.2 meg	†25K	NC
V8	6AQ5	560K	470Ω	FIL	FIL	†400Ω	†300Ω	560K		
V9	6CX8	†25.4K	100K	†3600Ω	FIL	FIL	†30K	3300Ω	†15K	†550Ω
V10	12X4	450Ω	TP	FIL	FIL	NC	450Ω	¶100K		

TP TIE POINT
NC NO CONNECTION

† MEASURED FROM OUTPUT OF RECTIFIER, PIN 7, V10.

● MEASURED WITH ANL SWITCH CLOSED.

* MEASURED WITH TRANSMIT-RECEIVE-RECEIVE ONLY & SWITCH IN TRANSMIT-RECEIVE POSITION, PUSH-TO-TALK BUTTON DEPRESSED.

POWER PLUG & CABLE
117VAC

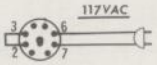

POWER PLUG & CABLE
12.6V

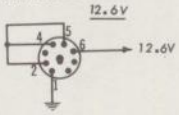

⊖ See parts list for alternate value or application.
1. Voltage measurements taken with vacuum tube voltmeter.
2. All controls set for normal operation, no signal applied.
3. Measured values are from socket pin or terminal to common ground.
4. All terminals viewed from bottom unless otherwise designated.
5. Numbers assigned to terminals may not be found on the unit.
6. Supply voltage maintained at rated value for voltage readings.

A PHOTOFACT STANDARD NOTATION SCHEMATIC

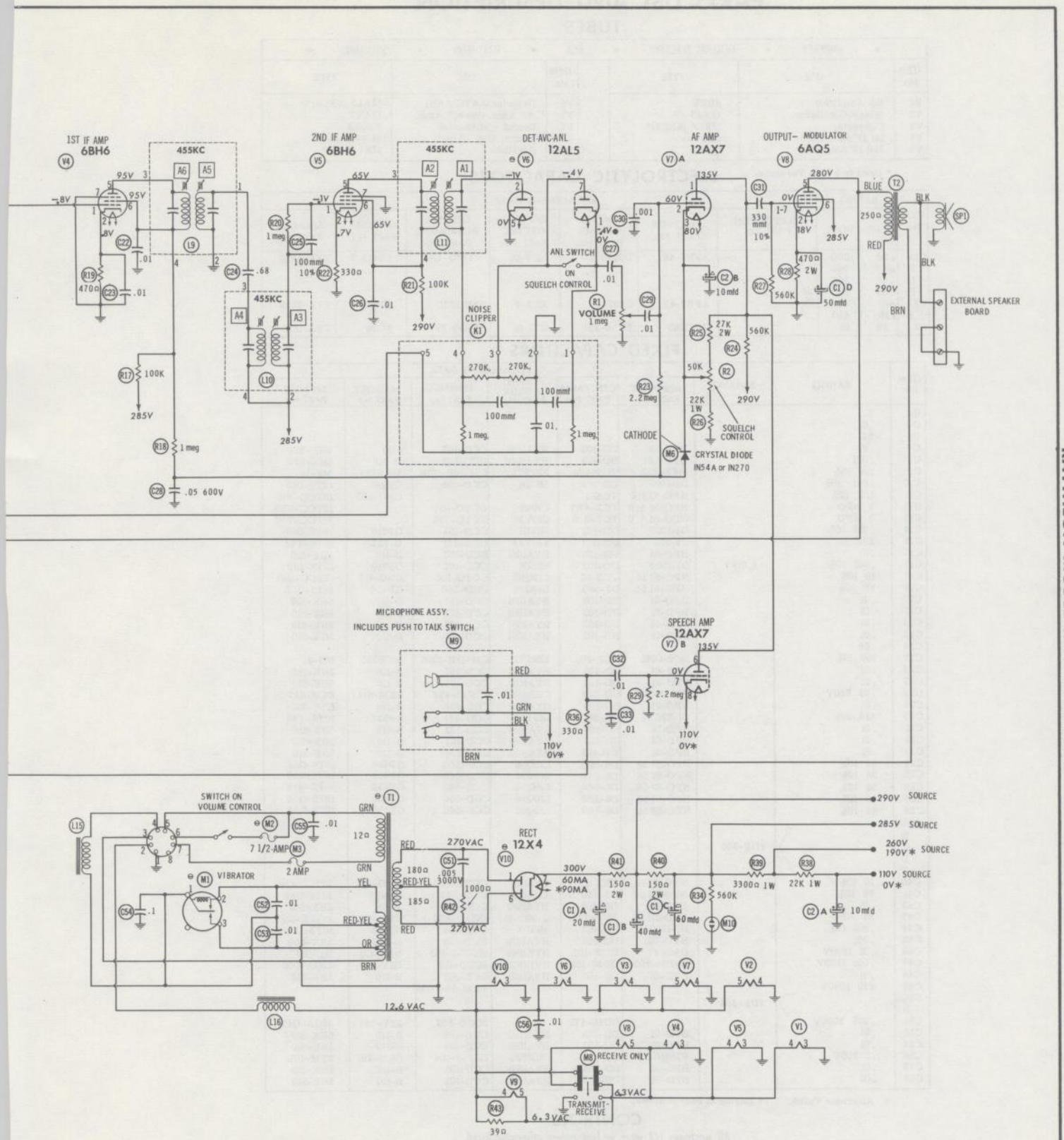

RAYTHEON MODEL RAY-TEL TWR 2

RAYTHEON MODEL RAY-TEL TWR 2

PARTS LIST AND DESCRIPTION

TUBES

◆ AMPEREX ◆ GENERAL ELECTRIC ◆ RCA ◆ RAYTHEON ◆ SYLVANIA ◆

ITEM No.	USE	TYPE	ITEM No.	USE	TYPE
V1	RF Amplifier	6BH6	V6	Detector / AVC / ANL	12AL5 (6AL5)*
V2	Mixer-Oscillator	12AT7	V7	AF Amp. -Speech Amp.	12AX7
V3	Converter	12BE6 (6BE6)*	V8	Output - Modulator	6AQ5A
V4	1st IF Amplifier	6BH6	V9	Trans. Osc. -Final	6CX8/6JL8
V5	2nd IF Amplifier	6BH6	V10	Rectifier	12X4 (6X4)*

* Used in 6 Volt Versions.

ELECTROLYTIC CAPACITORS

ITEM No.	RATING CAP.	RATING VOLT.	REPLACEMENT DATA RAYTHEON PART No.	AEROVOX PART No.	CORNELL-DUBILIER PART No.	GENERAL ELECTRIC PART No.	GENERAL INSTRUMENT PART No.	MALLORY PART No.	SPRAGUE PART No.
C1A	▲20	300		AFH4-46	D0380	XC4-66	TMQ-4140	FP419.7	TVL-4570
B	■40	300							
C	▰60	300							
D	50	25							
C2A	■10	450		AFH2-47	C0370	XC2-3	TMD2230	FP231	TVL-2750
B	▲10	450							
C3	50	12		PRS1265	BR50-25	QT1-15	TD-50-25	TC29	TVA-1206

FIXED CAPACITORS

ITEM No.	RATING	REMARKS	REPLACEMENT DATA AEROVOX PART No.	CENTRALAB PART No.	CORNELL-DUBILIER PART No.	ELMENCO PART No.	MALLORY PART No.	SPRAGUE PART No.
C4	3							
C5	.01							
C6	24							
C7	.01		BPD-01	DD-103	BYA10S1	CCD-103	B-110	5HK-S10
C8	.001		BPD-001	DD-102	BYA10D1	CCD-102	B-210	5HK-D10
C9	100 10%		1469-0001	TCZ-100	22R5T1	CM-19B-101K	MCB235	MS-31
C10	.001 10%		DI-1000	DD-102	5R5D1	CCD-102	GP210	10TS-D10
C11	1.0 10%		NPO-SI 1.0	TCZ-1			CNO-510	10TCC-V10
C12	5 NPO		NPO-SI 5.0	TCZ-4R7	C10V5C	CCTO-050		10TCC-V50
C13	3 NPO		NPO-SI 3.0	TCZ-3.0	C10V3C	CCTO-030		10TCC-V30
C14	.001 10%		DI-1000	DD-102	5R5D1	CCD-102	GP210	10TS-D10
C15	330		DI-330	DD-331	L10T33	CCD-331	B-333	10TS-T33
C16	.01		BPD-01	DD-103	BYA10S1	CCD-103	B-110	5HK-S10
C17	.001 10%	(.01) †	DI-1000	DD-102	5R5D1	CCD-102	GP210	10TS-D10
C18	10 10%		NPO-SI 10	TCZ-10	C10Q1C	CCTO-100	CNO-410	10TCC-Q10
C19	56 10%		NPO-SI 56	D6-560	L10Q56	CCD-560	GP456	10TS-Q56
C20	.01		BPD-01	DD-103	BYA10S1	CCD-103	B-110	5HK-S10
C21	.01		BPD-01	DD-103	BYA10S1	CCD-103	B-110	5HK-S10
C22	.01		BPD-01	DD-103	BYA10S1	CCD-103	B-110	5HK-S10
C23	.01		BPD-01	DD-103	BYA10S1	CCD-103	B-110	5HK-S10
C24	.68							
C25	100 10%		1469-0001	TCZ-100	22R5T1	CM-19B-101K	MCB235	MS-31
C26	.01		BPD-01	DD-103	BYA10S1	CCD-103	B-110	5HK-S10
C27	.01		BPD-01	DD-103	BYA10S1	CCD-103	B-110	5HK-S10
C28	.05 600V		P688N-047	DD-503	CUB6S47	6DP-3-473	GEM-6147	6TM-S47
C29	.01		BPD-01	DD-103	BYA10S1	CCD-103	B-110	5HK-S10
C30	330 10%		DI-330	DD-331	L10T33	CCD-331	GP333	10TS-T33
C31	.01		BPD-01	DD-103	BYA10S1	CCD-103	B-110	5HK-S10
C32	.01		BPD-01	DD-103	BYA10S1	CCD-103	B-110	5HK-S10
C33	.01		BPD-01	DD-103	BYA10S1	CCD-103	B-110	5HK-S10
C34	56 10%		NPO-SI 56	D6-560	L10Q56	CCD-560	GP456	10TS-Q56
C35	56 10%		NPO-SI 56	D6-560	L10Q56	CCD-560	GP456	10TS-Q56
C36	56 10%		NPO-SI 56	D6-560	L10Q56	CCD-560	GP456	10TS-Q56
C37	56 10%		NPO-SI 56	D6-560	L10Q56	CCD-560	GP456	10TS-Q56
C38	56 10%		NPO-SI 56	D6-560	L10Q56	CCD-560	GP456	10TS-Q56
C39A								
B								
C		#DP-305						
D								
E								
C40	10 10%		NPO-SI 10	TCZ-10	C10Q1C	CCTO-100	CNO-410	10TCC-Q10
C41	56 10%		NPO-SI 56	D6-560	L10Q56	CCD-560	GP456	10TS-Q56
C42	.01		BPD-01	DD-103	BYA10S1	CCD-103	B-110	5HK-S10
C43	27 NPO		NPO-DI 25	TCZ-27	C10Q27C	CCTO-270	CNO-427	10TCC-Q27
C44	.001 10%		DI-1000	DD-102	5R5D1	CCD-102	GP210	10TS-D10
C45	.001		BPD-001	DD-102	BYA10D1	CCD-102	B-210	5HK-D10
C46	.01 1600V		DAC-27	DD16-103	HVE16S1	16DP-3-103	UAC-110	BL-S10
C47	.001 1500V		HVD15-1000	DD30-102	HVB16D1	3CCD-102	2HV-210	30GA-D10
C48	.01		BPD-01	DD-103	BYA10S1	CCD-103	B-110	5HK-S10
C49	470 1000V					VCM-20-471M		
C50A								
B		#DP-304						
C51	.005 3000V			DD30-472		3CCD-502	3HV-247	30GA-D47
C52	.01		BPD-01	DD-103	BYA10S1	CCD-103	B-110	5HK-S10
C53	.01		BPD-01	DD-103	BYA10S1	CCD-103	B-110	5HK-S10
C54	.1 200V		P288N-1	DF-104	CUB2P1	2DP-3-104	GEM-201	2TM-P10
C55	.01		BPD-01	DD-103	BYA10S1	CCD-103	B-110	5HK-S10
C56	.01		BPD-01	DD-103	BYA10S1	CCD-103	B-110	5HK-S10

† Alternate Value. # Raytheon Part Number.

CONTROLS

All wattages 1/2 watt, or less, unless otherwise listed.

ITEM No.	USE	RESISTANCE	REPLACEMENT DATA RAYTHEON PART No.	CENTRALAB PART No.	CLAROSTAT PART No.	CTS-IRC PART No.	MALLORY PART No.
R1	Volume, Power On-Off Switch	1meg		B-70-S or F2-1meg, SU-204, KR-4	A47-1meg-Z, FS-3, SWE-23	Q13-137, 76-1 or (BU1, CF-26, SS1, GC)*	(UA16A, SF1000, US-41) or (RU16A, SF-1000, SL38, US-41) or (U53, US26)
R2	Squelch, ANL Switch	50K		F1-50K, SU204, KR-2	A47-50K-S, FS-3, SWE-20	Q11-123, 76-2, or (BU1, CF12, SS1, WF)*	(UA54L, SF1000, US42) or (RU54L, SF1000, SL38, US42) or (U35, US27)

* "SNAPTROL"

PARTS LIST AND DESCRIPTION (CONTINUED)

COILS (RF-IF)

ITEM No.	USE	REPLACEMENT DATA					NOTES
		RAYTHEON PART No.	MERIT PART No.	MILLER PART No.	STANCOR PART No.	WORKMAN PART No.	
L1	Indicator Coup.	DP-108					
L2	Antenna Tank	DP-109					
L3	RF Choke (5.6uh)	DP-105	SW-631	4609	RTC-8519	T959	
L4	Rec. RF	DP-107					
L5	RF Choke (1.5 uh)	DP-103	BC-562	4604	RTC-8516	T856	
L6	6MC IF	DP-303					
L7	Conv. Cath. (27uh)	DP-301					
L8	1st 455KC IF	DP-101	BC-353	12-C30	RTC-8633	T608	
L9	2nd 455KC IF	DP-101	BC-352	12-C31	RTC-8632	T607	
L10	3rd 455KC IF	DP-101	BC-352	12-C31	RTC-8632	T607	
L11	4th 455KC IF	DP-101	BC-352	12-C31	RTC-8632	T607	
L12	Trans. Osc. Coup.	DP-302					
L13	RF Choke (5.6uh)	DP-105					
L14	RF Choke (15uh)	DP-104		4624	RTC-8524	T862	
L15	Hash Choke (48uh)	DP-106		7825-8			
L16	Hash Choke (48uh)	DP-106		7825-8			

TRANSFORMER (POWER)

ITEM No.	RATING			REPLACEMENT DATA					NOTES
	PRI.	SEC. 1	SEC. 2	RAYTHEON PART No.	MERIT PART No.	STANCOR PART No.	THORDARSON PART No.	TRIAD PART No.	
T1	117VAC @ .720A or 12.6V DC @ 3.1A	540VCT @60MA DC, (90MA)*		DP-112 ①					* Transmit ① 6 Volt DC Versions use Part #DP-113

TRANSFORMER (AUDIO OUTPUT)

ITEM No.	IMPEDANCE		REPLACEMENT DATA					NOTES
	PRI.	SEC.	RAYTHEON PART No.	MERIT PART No.	STANCOR PART No.	THORDARSON PART No.	TRIAD PART No.	
T2	6500Ω	3-4Ω	DP-111	A-2931	A-3878	24S05	S-63X	

SPEAKER

ITEM No.	TYPE	REPLACEMENT DATA		NOTES
		RAYTHEON PART No.	QUAM PART No.	
SP1	4" PM 3-4Ω	DP-114	4A1	

COMPONENT COMBINATIONS

ITEM No.	USE	DESCRIPTION	RAYTHEON PART No.	REPLACEMENT DATA
K1	Noise Clipper Net.	(2) 270K, (2) 1meg, (2) 100mmf, .01mfd	DP-110	

VIBRATOR

ITEM No.	TYPE	INPUT VOLTS	FRE-QUENCY	REPLACEMENT DATA			NOTES
				RAYTHEON PART No.	CORNELL-DUBILIER PART No.	MALLORY PART No.	
M1	Interrupter	12.6	115∿		6301	G-1601	12.6VDC Versions
	Interrupter	6.3	115∿		5301	1601	6VDC Versions

FUSES

ITEM No.	TYPE	RATING	REPLACEMENT DATA					
			RAYTHEON PART No.		LITTELFUSE PART No.		BUSS PART No.	
			FUSE	HOLDER	FUSE	HOLDER	FUSE	HOLDER
M2	3AG	7½A 250V	AGC 7½①		31707.5 (3AG 7½A 250V)	342001	AGC 7½	HKP
M3	3AG	2A 250V S/B	AGC 2		312002 (3AG 2A 250V)	342001	AGC 2	HKP

① 15 Amp. fuse used in 6-volt Versions.

MISCELLANEOUS

ITEM No.	PART NAME	RAYTHEON PART No.	NOTES
M4A	Crystal	DP-01 to DP-23	Receive } Matched Pair, Order by Channel Desired.
B			Transmit }
M5	Crystal	DP-307	Converter Crystal, 5545KC
M6	Squelch Diode	DP-309	1N270 or 1N54A
M7	Switch	DP-306	Channel Selector (Rotary Wafer Type)
M8	Switch	DP-121	Transmit Receive—Receive Only (DPDT Slide Type)
M9	Microphone	DP-122	Includes Switch, Capacitor, and Cord.
M10	Lamp Assembly	DP-308	Power On Indicator
	Power Cable	DP-312	6VDC
	Power Cable	DP-313	12VDC
	Power Cable	DP-314	117VAC
	Knob	DP-310	Volume, Squelch
	Knob	DP-311	Channel Selector

WIRING DATA

General-use Hook-up Wire	Use BELDEN No.	8530 (Solid) Available in 12 Colors
		8524 (Stranded) Available in 12 Colors
Shielded Antenna Lead	Use BELDEN No.	8214 Lowest Loss (RG-8/U Type)
		8237 Low Loss (RG-8/U)
		8240 (Solid) Miniature (RG-58/U)
		8259 (Stranded) Miniature (RG-58A/U)
Coiled Microphone Cable	Use BELDEN No.	8497 3 Conductor-1 Shielded for Press-to-Talk (Neoprene)
		8496 3 Conductor-1 Shielded for Press-to-Talk (Vinyl)
Ignition Noise Suppression	Use BELDEN No.	7300-Series Spark-Plug Sets
Bonding Strap	Use BELDEN No.	8661 (3/8 In.)

TRADE NAME:	Raytheon Model Raycom
SUPPLIER:	Raytheon Co., Distributor Products Div. 411 Providence Turnpike, Westwood, Mass.
TYPE SET:	AC-Battery, 9 Tube Transceiver
POWER SUPPLY:	110 – 120 Volts AC, 60 Cycles (or) 12 VDC (or) 32VDC
RATING:	4.5 Amp. @12.6VDC
TUNING RANGE:	Any 5 CB Channels 1 thru 22

ALIGNMENT INSTRUCTIONS

RECEIVER

Turn Gate Control (R2) to off.

Connect a signal generator tuned to 455KC (400~ Mod.) thru .1mfd to pin 2 of V2A (Mixer), common to chassis. Connect a DC VTVM to point Ⓐ. Adjust A1, A2, A3, and A4 for maximum deflection.

Change connection of signal generator to the antenna socket and retune generator to 27.085KC (Channel 11). Adjust A5, A6 and A7 for maximum deflection.

TRANSMITTER

Connect a 52Ω dummy load to antenna socket. Using a Frequency Meter, adjust A8 to frequency indicated on osc. crystal for zero beat, (within 100 cps.)

Connect DC probe of VTVM to point Ⓑ, common to chassis. Adjust A9 on channel 11 for maximum deflection of VTVM and then back off about 10% on the long slope. (When the crystal oscillator is tuned in one direction the output will increase slowly -- long slope -- then suddenly fall off).

Connect DC probe of VTVM to point Ⓒ, common to chassis. Adjust A10 for maximum deflection (approximately 30 volts).

Connect DC milliammeter to two screw terminal strip and adjust A11 and A12 alternately until the meter reads 25ma. Care should be taken not to exceed this current, otherwise the maximum legal plate input of 5 watts will be exceeded.

Adjustment A13 is intended to cancel out the internal wiring inductance between the pi section load capacitor and the antenna coaxial feed. The output of the transmitter is designed to match from 25 to 75 ohms. This adjustment (A13) may also be used to compensate for a standing wave ratio appearing on the coaxial cable feed to the antenna. An antenna may be off frequency by several inches and yet be loaded efficiently by the adjustment of A13. A12 is shorted out of the circuit when fully meshed.

PARTS LIST AND DESCRIPTIONS

TUBES

ITEM No.	USE	TYPE	ITEM No.	USE	TYPE
V1	RF Amplifier	12AU6	V6	AF Output-Modulator	6AQ5
V2	Mixer-Osc.	6U8A	V7	Trans. Osc. -Doubler	12AU7
V3	IF Amplifier	12BA6	V8	Final Amplifier	12AQ5
V4	Det. -AF Amp.	12CR6	V9	Rectifier	12X4
V5	Noise Limiter-Squelch	12AL5			

ELECTROLYTIC CAPACITORS

ITEM No.	RATING CAP.	RATING VOLT.	REPLACEMENT DATA RAYTHEON PART No.	AEROVOX PART No.	CORNELL-DUBILIER PART No.	MALLORY PART No.	PYRAMID PART No.	SPRAGUE PART No.	NOTES
C1A	▲60	450		AFH2-59	A0500	FP148	TMS-1790	TVL-1730	Note 1
B	■60	450			BR6045	TC795	TD-50-450	TVA-1714	Note 1
C2A	■20	100		AFH2-08	B0090	FP208	TMD-2075	TVL-2415	
B	▲20	100							

Note 1. AC versions use 20-20mfd in this application.

FIXED CAPACITORS

ITEM No.	RATING	REMARKS	REPLACEMENT DATA AEROVOX PART No.	CENTRALAB PART No.	CORNELL-DUBILIER PART No.	ELMENCO PART No.	MALLORY PART No.	SPRAGUE PART No.
C3	5000		BPD-005	DD-502	BYA10D5	CCD-502	B-250	5HK-D50
C4	20000		BPD-02	DD-203	BYB6S2	CCD-203	B-120	5HK-S20
C5	20000		BPD-02	DD-203	BYB6S2	CCD-203	B-120	5HK-S20
C6	.68 10%		NPO-SI .68	TCZ-R68				
C7	20000		BPD-02	DD-203	BYB6S2	CCD-203	B-120	5HK-S20
C8	20000		BPD-02	DD-203	BYB6S2	CCD-203	B-120	5HK-S20
C9	10000		BPD-01	DD-103	BYA10S1	CCD-103	B-110	5HK-S10
C10	10 10%	(3.3) †	NPO-SI 10	D6-100	L10Q1	CCD-100	GP410	10TS-Q10
C11	51 10%		NPO-SI 51	D6-500	L10Q51	CCD-500	GP450	10TS-Q50
C12	10000		BPD-01	DD-103	BYA10S1	CCD-103	B-110	5HK-S10
C13	5000		BPD-005	DD-502	BYA10D5	CCD-502	B-250	5HK-D50
C14	10000		BPD-01	DD-103	BYA10S1	CCD-103	B-110	5HK-S10
C15	10000		BPD-01	DD-103	BYA10S1	CCD-103	B-110	5HK-S10
C16	100 10%		NPO-SI 100	D6-101	L10T1	CCD-101	GP310	10TS-T10
C17	100 10%		NPO-SI 100	D6-101	L10T1	CCD-101	GP310	10TS-T10
C18	20000	(10000) †	BPD-02	DD-203	BYB6S2	CCD-203	B-120	5HK-S20
C19	10000		BPD-01	DD-103	BYA10S1	CCD-103	B-110	5HK-S10
C20	100 10%		NPO-SI 100	D6-101	L10T1	CCD-101	GP310	10TS-T10
C21	.05 600V		P688N-05	DD-503	CUB6S5	6DP-3-503	GEM-615	6TM-S50
C22	1000		BPD-001	DD-102	BYA10D1	CCD-102	B-210	5HK-D10
C23	.05 600V		P688N-05	DD-503	CUB6S5	6DP-3-503	GEM-615	6TM-S50
C24	10000		BPD-01	DD-103	BYA10S1	CCD-103	B-110	5HK-S10
C25	1000 10%		DI-1000	DD-102	5R5D1	CCD-102	GP210	10TS-D10
C26	10000		BPD-01	DD-103	BYA10S1	CCD-103	B-110	5HK-S10
C27	1000 10%		DI-1000	DD-102	5R5D1	CCD-102	GP210	10TS-D10
C28	10000		BPD-01	DD-103	BYA10S1	CCD-103	B-110	5HK-S10
C29	3300 10%		1469-0033		1R5D33	CM-20B-332K	MCJ462	MS-233
C30	1000 10%		DI-1000	DD-102	5R5D1	CCD-102	GP210	10TS-D10
C31	10 max.							
C32	56 10%		NPO-SI 56	D6-560	L10Q56	CCD-560	GP456	10TS-Q56
C33	5000 2000V			DD30-502	HVC20D5	3CCD-502	2HV-247	BL-D50
C34	100 10%		NPO-SI 100	D6-101	L10T1	CCD-101	GP310	10TS-T10
C35	24 10%		1469-000024	TCZ-24	22R5Q24	CM-19B-240K	MCB220	MS-424
C36	10000 1600V		DAC-27	DD16-103	HVE16S1	16DP-3-103	UAC-110	BL-S10
C37	24 10%		1469-000024	TCZ-24	22R5Q24	CM-19B-240K	MCB220	MS-424
C38	1000 10%		DI-1000	DD-102	5R5D1	CCD-102	GP210	10TS-D10
C39	4700 3000V			DD30-472		3CCD-502	3HV-247	30GA-D47
C40	1000 1500V		DAC-2	DD30-102	HVB20D1	3CCD-102	UAC-210	BL-D10
C41	10000		BPD-01	DD-103	BYA10S1	CCD-103	B-110	5HK-S10
C42	470	(1000) †	1468-00047		5W5T47	CM-19B-471M	MCJ244	1FM-347
C43	600 max.							
C44	4700 3000V			DD30-472		3CCD-502	3HV-247	30GA-D47
C45	.5 200V		P288N-5		CUB2P5	2DP-5-504	GEM-205	2TM-P50

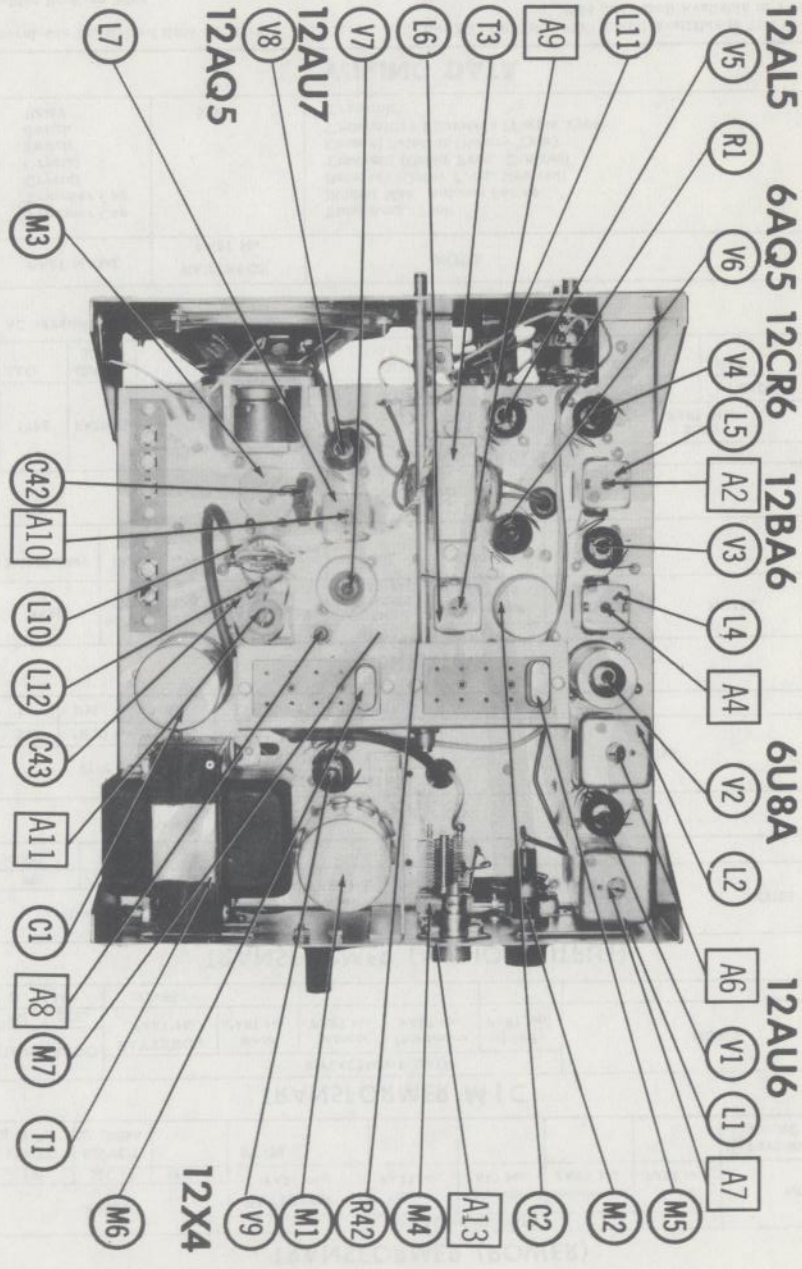

RAYTHEON MODEL RAYCOM

PARTS LIST AND DESCRIPTIONS (Continued)

FIXED CAPACITORS (cont)

ITEM No.	RATING	REMARKS	REPLACEMENT DATA					
			AEROVOX PART No.	CENTRALAB PART No.	CORNELL-DUBILIER PART No.	ELMENCO PART No.	MALLORY PART No.	SPRAGUE PART No.
C46	.5 200V	Note 1	P288N-5		CUB2P5	2DP-5-504	GEM-205	2TM-P50
C47	.5 200V	Note 1	P288N-5		CUB2P5	2DP-5-504	GEM-205	2TM-P50

Note 1. Not used in some versions.
† Alternate Value.

CONTROLS

ITEM No.	RATING		REPLACEMENT DATA					INSTALLATION NOTES
	RESISTANCE	WATTS	RAYTHEON PART No.	CENTRALAB PART No.	CLAROSTAT PART No.	CTS-IRC PART No.	MALLORY PART No.	
R1A	1meg	½	CM-16666	B-69	A47-1meg-S	Q11-137	U54	Volume
B	Shaft			Not Req.	RS-2	Not Req.	Not Req.	
C	Switch			KR-2	SWE-20	76-2	US-27	Power Off-On
R2A	1meg	½	CM-18888	B-69	A47-1meg-S	Q11-137	U54	Gate A. N. L.
B	Shaft			Not Req.	RS-2	Not Req.	Not Req.	
C	Switch			KR-1	SWE-12	76-1	US-26	Gate Off-On

RESISTORS

All wattages 1/2 watt, or less, unless otherwise listed.

ITEM No.	RATING	REPLACEMENT DATA			ITEM No.	RATING	REPLACEMENT DATA		
		IRC PART No.	WORKMAN TV PART No.	REMARKS			IRC PART No.	WORKMAN TV PART No.	REMARKS
R3	560K				R24	1meg			
R4	100K				R25	220Ω			
R5	1meg				R26	560K			
R6	3300Ω				R27	330Ω 2W			
R7	100K				R28	10K			
R8	2200Ω				R29	10K 1W			
R9	100Ω				R30	22K			
R10	270K				R31	330Ω			
R11	1meg				R32	47Ω			
R12	22K 1W				R33	10K			
R13	22K 1W			Note 1	R34	220Ω			
R14	270K				R35	10K 2W			
R15	270K				R36	1meg			
R16	1meg				R37	100Ω 2W			
R17	1meg				R38	3300Ω			
R18	1meg				R39	330Ω			
R19	1meg				R40	330Ω			
R20	270K				R41	10Ω 2W			
R21	270K				R42	100K			
R22	2.2meg				R43	10K 1W			
R23	270K								

Note 1. Not used in some versions.

COILS (RF-IF)

ITEM No.	USE	REPLACEMENT DATA					NOTES
		RAYTHEON PART No.	Merit PART No.	Miller PART No.	Stancor PART No.	Workman TV PART No.	
L1	Ant.	TL-61					
L2	RF	TL-62					
L3	RF Choke (1.5uh)		BC-562	4604	RTC-8516	T856	
L4	Input IF	302217K	BC-352	12-C1	RTC-8632	T607	
L5	Output IF	302225K	BC-352	12-C2	RTC-8633	T608	
L6	Osc. Plate	TL-65					
L7	Doubler Plate	TL-64					
L8	RF Choke (2uh)		BC-563	4606	RTC-8517	T857	
L9	RF Choke (15uh)			4624	RTC-8524	T862	
L10	Final Plate	TL-63					
L11	RF Choke (15uh)			4624	RTC-8524	T862	
L12	Output						
L13	Hash Choke (10uh)	T105-116T	BC-537	7825-8	RTC-9182		

TRANSFORMER (POWER)

ITEM No.	RATING			REPLACEMENT DATA					NOTES
	PRI.	SEC. 1	SEC. 2	RAYTHEON PART No.	Merit PART No.	Stancor PART No.	Thordarson PART No.	Triad PART No.	
T1	12VCT @ 2.7A	520VCT @ .085A		ST-86 ①					① Part #ST-89 used for AC Operation.

TRANSFORMER MIC

ITEM No.	TURNS RATIO		REPLACEMENT DATA					NOTES
	PRI.	SEC.	RAYTHEON PART No.	Merit PART No.	Stancor PART No.	Thordarson PART No.	Triad PART No.	
T2	1	14	ST-88					

TRANSFORMER (AUDIO OUTPUT)

ITEM No.	IMPEDANCE		REPLACEMENT DATA					NOTES
	PRI.	SEC.	RAYTHEON PART No.	Merit PART No.	Stancor PART No.	Thordarson PART No.	Triad PART No.	
T3	5900Ω	3-4Ω	ST-19					

SPEAKER

ITEM No.	TYPE			REPLACEMENT DATA		NOTES
	SIZE	FIELD	V. C. IMP.	RAYTHEON PART No.	QUAM PART No.	
SP1	5"	PM	3-4Ω	220006	5A07	

VIBRATOR

ITEM No.	TYPE	INPUT VOLTS	FREQUENCY	REPLACEMENT DATA				NOTES
				RAYTHEON PART No.	CORNELL-DUBILIER PART No.	MALLORY PART No.	RADIART PART No.	
M1	Interrupter	12.6	115V	G-8301	6301	G1601	6301	

FUSES

ITEM No.	TYPE	RATING	REPLACEMENT DATA					
			RAYTHEON PART No.		LITTELFUSE PART No.		BUSS PART No.	
			FUSE	HOLDER	FUSE	HOLDER	FUSE	HOLDER
M2	3AG	10A ① 32V			313010 (3AG 10A 32V)	342001	AGC 10	HKP

① AC versions use 1A in this application.

MISCELLANEOUS

ITEM No.	PART NAME	RAYTHEON PART No.	NOTES
M3	Trimmer Cap		Final Amp. Tank
M4	Trimmer Cap		110mmf Max. Antenna Series
M5	Crystal		Receiver (Order Freq. Desired)
M6	Crystal		Transmit (Order Freq. Desired)
M7	Switch		Channel Selector (Rotary Type)
M8	Switch		Transmitter Filaments (Toggle Type)
M9	Relay	579	Transmit

WIRING DATA

General-use Unshielded Hook-up Wire ..... Use BELDEN No. 8530 (Solid) Available in Ten Colors
8524 (Stranded) Available in Ten Colors
Shielded Hook-up Wire ..... Use BELDEN No. 8885
Bonding Strap ..... Use BELDEN No. 8661

CHASSIS-BOTTOM VIEW-ALIGNMENT, CAPACITOR & MISC. IDENT.

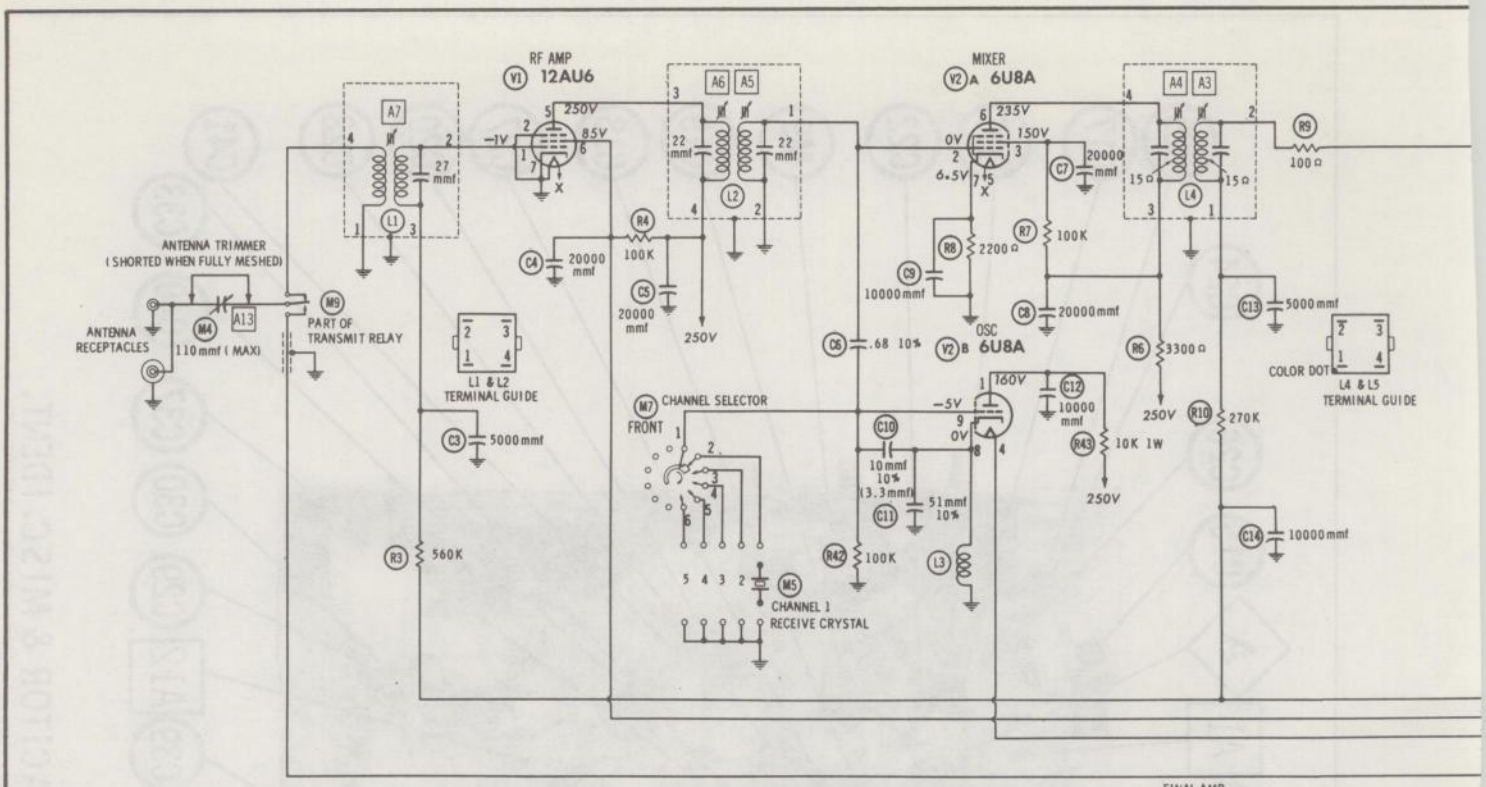

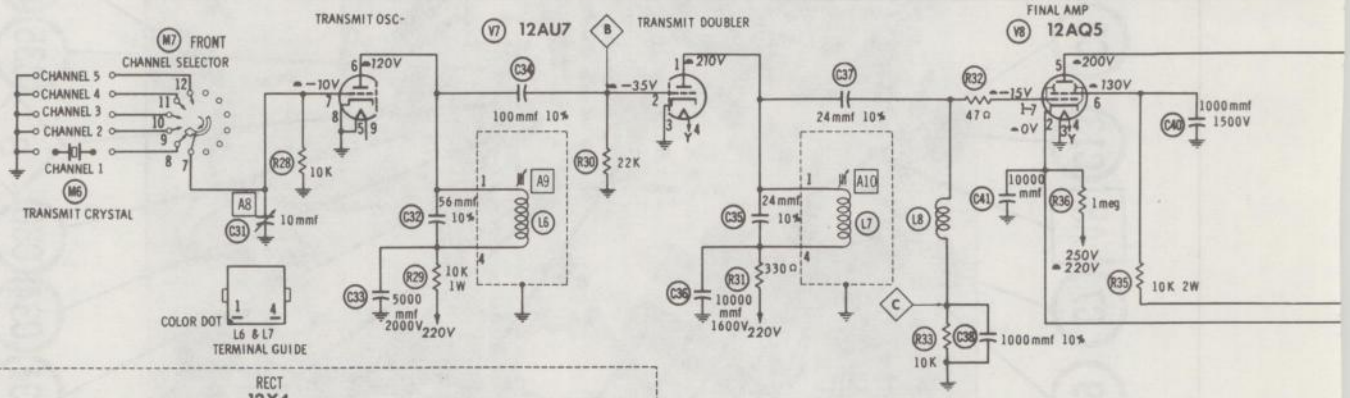

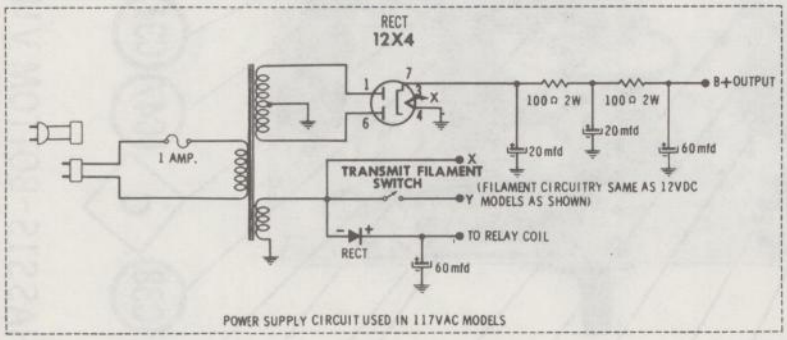

RESISTANCE READINGS

ITEM	TUBE	Pin 1	Pin 2	Pin 3	Pin 4	Pin 5	Pin 6	Pin 7	Pin 8	Pin 9
V1	12AU6	2meg	0Ω	0Ω	2Ω	†100Ω	†100K	0Ω		
V2	6U8A	†10K	0Ω	†100K	2Ω	3Ω	†3400Ω	2200Ω	0Ω	100K
V3	12BA6	1.8meg	0Ω	0Ω	2Ω	†11K	†11K	0Ω		
V4	12CR6	0Ω	520K	2Ω	0Ω	†270K	†1meg	2.2meg		
V5	12AL5	†1.2meg	270K	0Ω	4Ω	2.5meg	0Ω	†2.1meg		
V6	6AQ5	560K ▬820Ω	330Ω ▬550Ω	0Ω	3Ω	†365Ω	†100Ω	560K ▬820Ω		
V7	12AU7	▬†430Ω	22K	0Ω	0Ω	2Ω	▬†10K	10K	0Ω	NC
V8	12AQ5	NC	▬0Ω	2Ω	0Ω	†585Ω	†10K	10K		
V9	12X4	135Ω	TP	0Ω	2Ω	NC	120Ω	¶		

ALL MEASUREMENTS MADE IN "RECEIVE" POSITION UNLESS OTHERWISE DESIGNATED.
▬ MEASURED IN "TRANSMIT" POSITION.
NC NO CONNECTION
¶ THIS READING WILL VARY DEPENDING UPON THE CONDITION OF THE ELECTROLYTIC IN THE CIRCUIT.
† MEASURED FROM PIN 7 OF V9.
TP TIE POINT

A PHOTOFACT STANDARD NOTATION SCHEMATIC

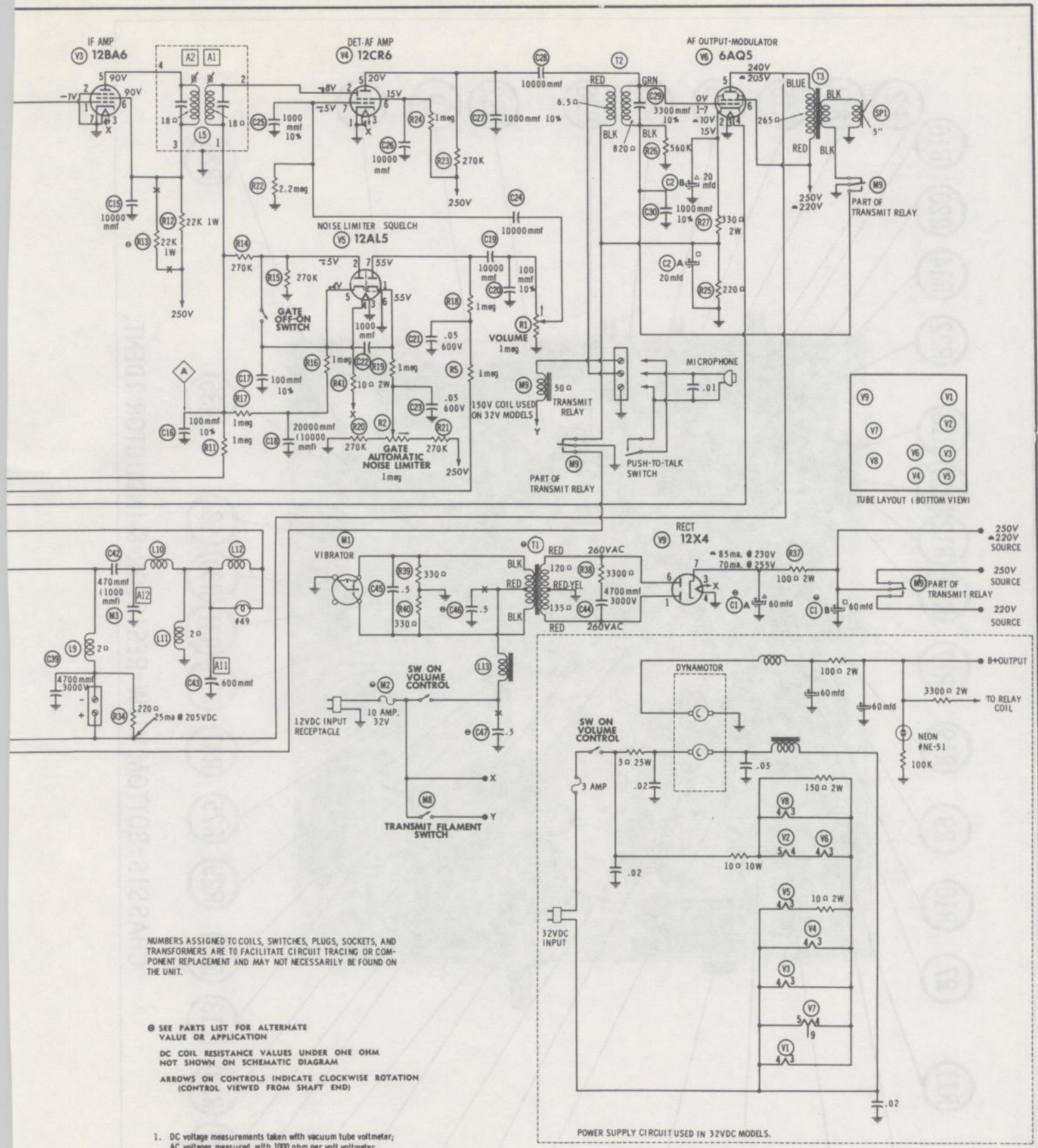

NUMBERS ASSIGNED TO COILS, SWITCHES, PLUGS, SOCKETS, AND TRANSFORMERS ARE TO FACILITATE CIRCUIT TRACING OR COMPONENT REPLACEMENT AND MAY NOT NECESSARILY BE FOUND ON THE UNIT.

⊖ SEE PARTS LIST FOR ALTERNATE VALUE OR APPLICATION

DC COIL RESISTANCE VALUES UNDER ONE OHM NOT SHOWN ON SCHEMATIC DIAGRAM

ARROWS ON CONTROLS INDICATE CLOCKWISE ROTATION (CONTROL VIEWED FROM SHAFT END)

1. DC voltage measurements taken with vacuum tube voltmeter; AC voltages measured with 1000 ohm per volt voltmeter.
2. Socket connections are shown as bottom views.
3. Measured values are from socket pin to common ground.
4. Line voltage maintained at 117 volts for voltage readings.
5. Nominal tolerance on component values makes possible a variation of ±15% in voltage and resistance readings.
6. Volume control at maximum, no signal applied for voltage measurements.

RAYTHEON MODEL RAYCOM

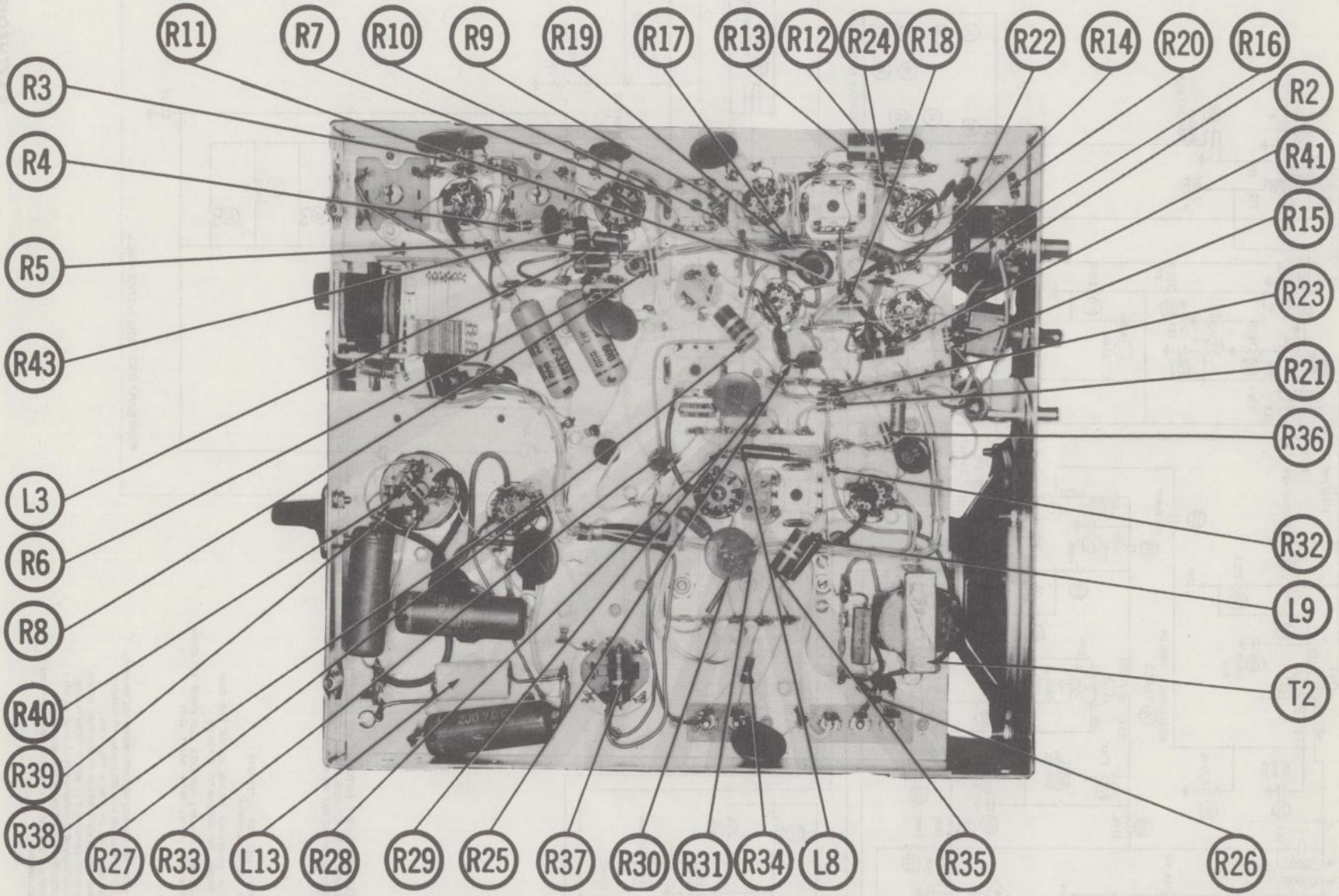

CHASSIS-BOTTOM VIEW-RESISTOR & INDUCTOR IDENT.

TRADE NAME: Realtone Model TR-6134

SUPPLIER: Realtone Electronics
71 Fifth Ave., New York 3, N. Y.

TYPE SET: 11 Transistor AM-CB Transceiver

POWER SUPPLY: 12 Volts DC

RATING: 6MA@12VDC (AM, No Signal)
7MA@12VDC (CB, Receive, No Signal)
16MA@12VDC (CB, Transmit, No Mod.)

TUNING RANGE: Any one CB Channel 1 thru 22
BROADCAST 540 — 1620KC

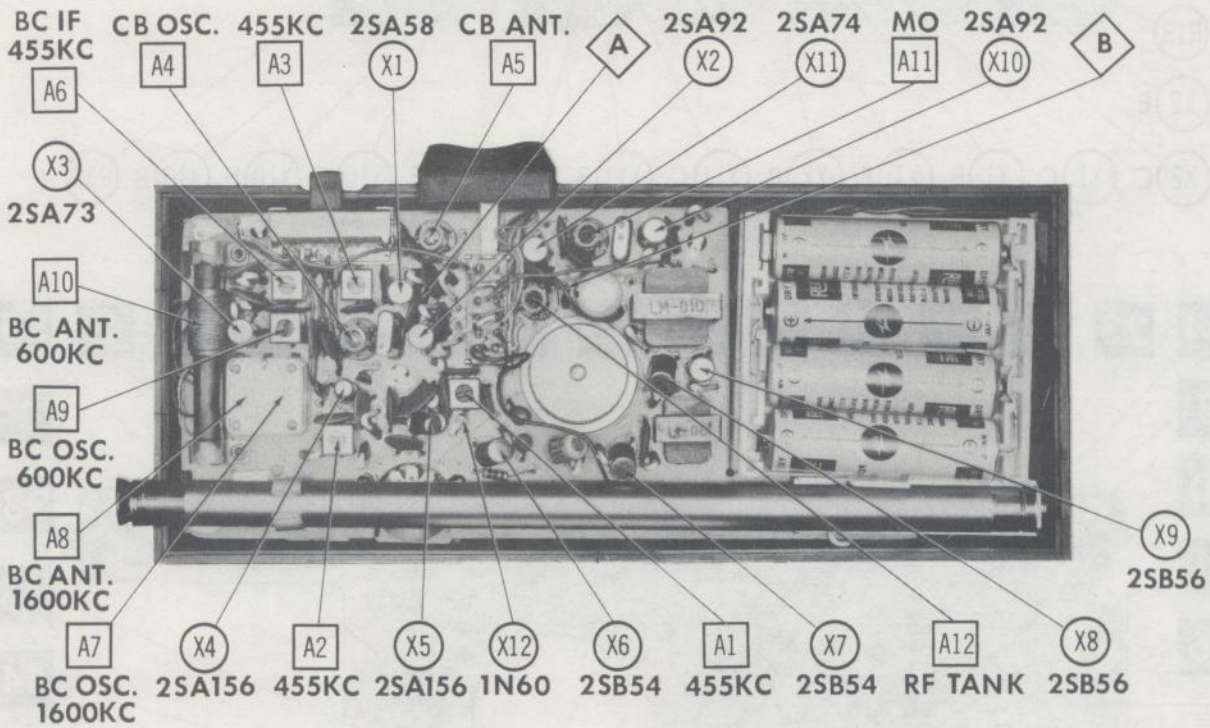

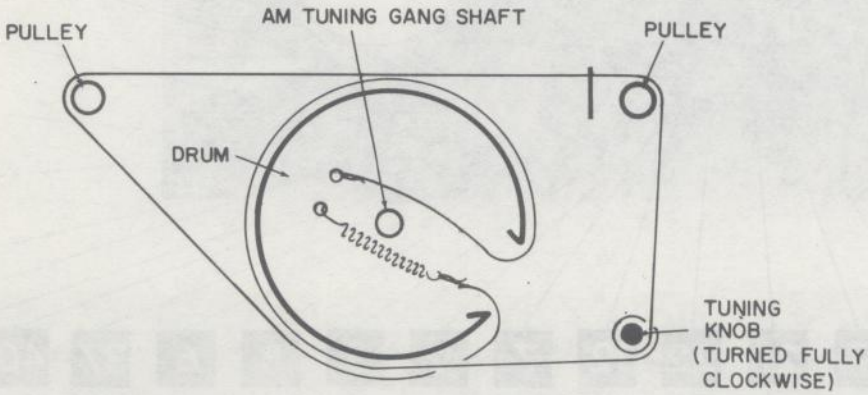

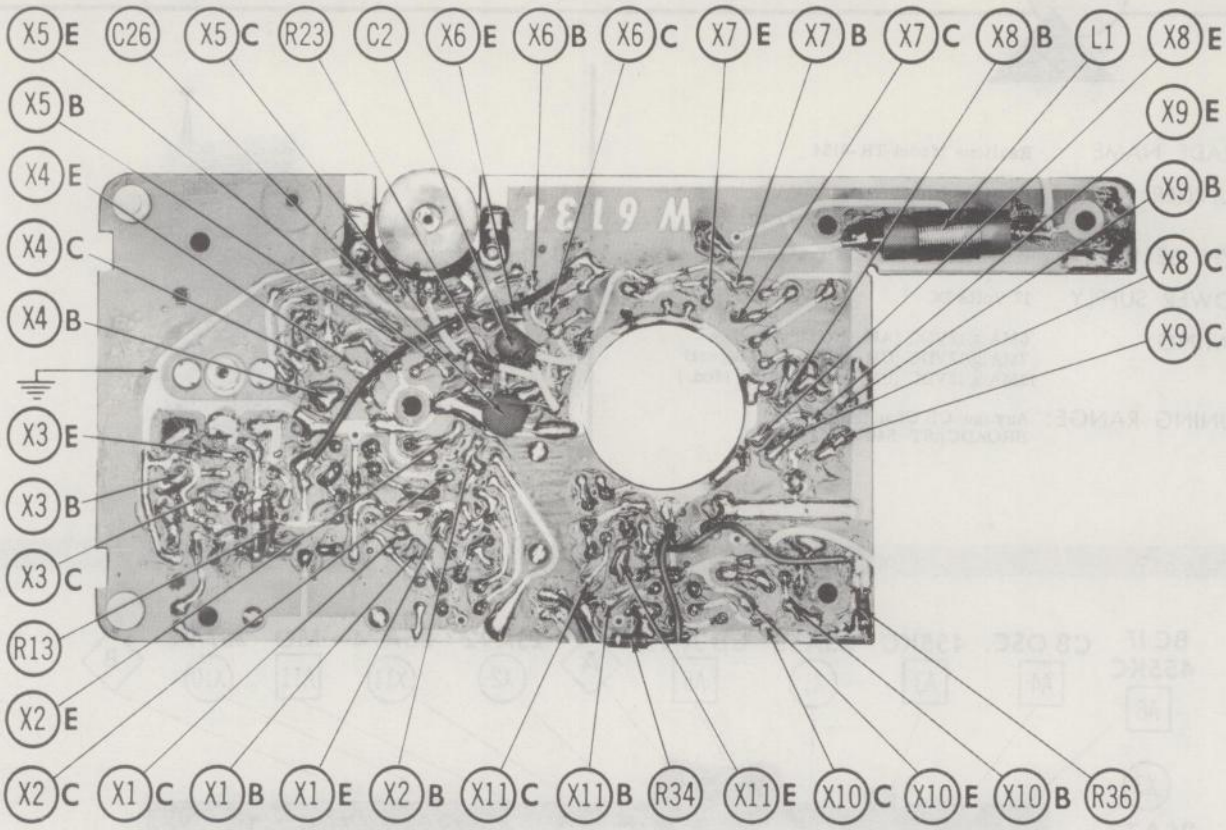

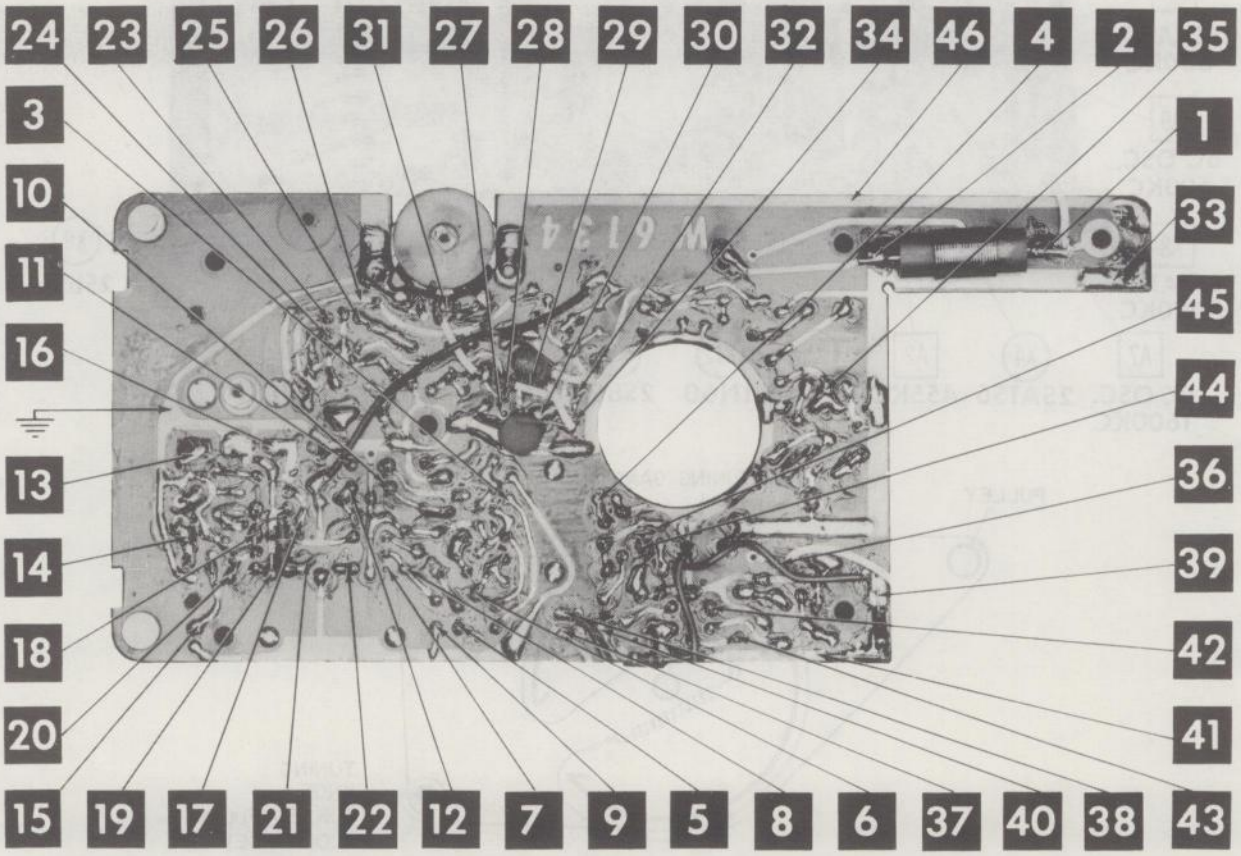

A Howard W. Sams CIRCUITRACE Photo

ALIGNMENT INSTRUCTIONS

This transceiver meets all requirements of F.C.C. Rules & Regulations, Part 15, Subpart "E" for low power communications devices and requires no station license. However, only those persons properly licensed by the F.C.C. are permitted to repair or adjust any malfunctioning unit found to be transmitting illegally. (Refer to F.C.C. Rules & Regulations, Part 19, Subpart "D", Section 19.71.)

Equipment Required

1. AM Signal Generator
2. Audio Signal Generator
3. Frequency Meter
4. Oscilloscope
5. Output Meter
6. Milliammeter

CB Receiver Alignment

1. Connect output meter across speaker voice coil (use earphone jack).

2. Set receiver volume control to maximum.

3. Slide Radio-Trans switch to Trans.

4. Connect high side of signal generator through a .01 mfd capacitor to telescoping antenna (antenna must be fully collapsed) connect low side to receiver ground. Set generator to 455 KC **1000∿** 30% Modulation. Output of generator should be no higher than is necessary to obtain output readings.

5. Turn receiver on. (Batteries should be new or up to full voltage while aligning receiver and transmitter sections).

6. Adjust A1, A2 and A3 for maximum reading on output meter.

CB Receiver Oscillator and RF Alignment

1. Disconnect signal generator and output meter.

2. Connect negative lead of milliammeter (set on 100 μa scale) to receiver ground. Connect positive ammeter lead through an OA70 (or equivalent) diode to point Ⓐ as follows:

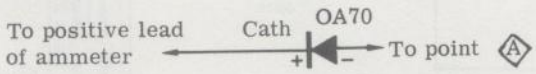

3. Adjust A4 counterclockwise (out) for maximum current reading. Then turn A4 clockwise (in) until reading is 5% less than maximum.

4. Disconnect milliammeter and reconnect output meter and signal generator. Connect high side of generator through a 13 mmf capacitor to telescoping antenna, low side to receiver ground. Set generator to operating frequency specified for the unit being aligned. **Use 1000∿ 30% modulation.**

5. Adjust A5 for maximum reading on output meter.

Broadcast AM Receiver Alignment

1. Slide Radio-Trans switch to Radio Position.

2. Set receiver volume control to maximum. Tuning gang fully open.

3. Connect output meter to earphone jack.

4. Fashion loop of several turns of wire and connect to output of signal generator to radiate signal into BC antenna of receiver. **Set generator to 455KC 400∿** modulation and operate with output no higher than necessary to obtain an output reading.

5. Adjust A6 for maximum reading on output meter.

6. Set signal generator to 1600 KC.

7. Set receiver dial to 1600 KC.

8. Adjust A7 and A8 for maximum reading on output meter.

9. Set signal generator to 600 KC.

10. Set receiver dial to 600 KC.

11. Adjust A9 and A10 for maximum reading. A10 is adjusted by moving coil along ferrite core.

Transmitter Alignment

1. Connect milliammeter (10 ma range) into RF output circuit as follows:

   a. Cut loop in lead of resistor (R35) at point Ⓑ.

   b. Connect negative lead of milliammeter to cut lead on resistor (R35).

   c. Connect positive lead of milliammeter to cut lead on wiring board at point 39.

2. Connect a dummy antenna (13 mmf capacitor in series with a 39Ω resistor) between telescoping antenna and receiver ground.

3. Set receiver volume control to maximum.

4. Hold Talk-Listen switch in Talk position and:

   a. Adjust A11 counterclockwise (out) for maximum current reading. Then turn A11 clockwise (in) for a reading .15 ma less than maximum.

   b. Adjust A12 for minimum current reading.

5. Connect the audio generator to earphone jack. Connect the oscilloscope to the earphone jack of another TR6134 (known to be in good operating condition and operating on the same frequency) and set this unit to receive the signal from the unit being aligned.

6. Press the Talk-Listen switch on the unit being aligned and check the waveform for distortion on the oscilloscope connected to the second unit. Realign if necessary.

7. Remove milliammeter and solder cut lead of resistor R35.

8. Use a good frequency meter to check the frequency of the TR 6134 to make certain it is within the ± .005% deviation permitted by the F.C.C.

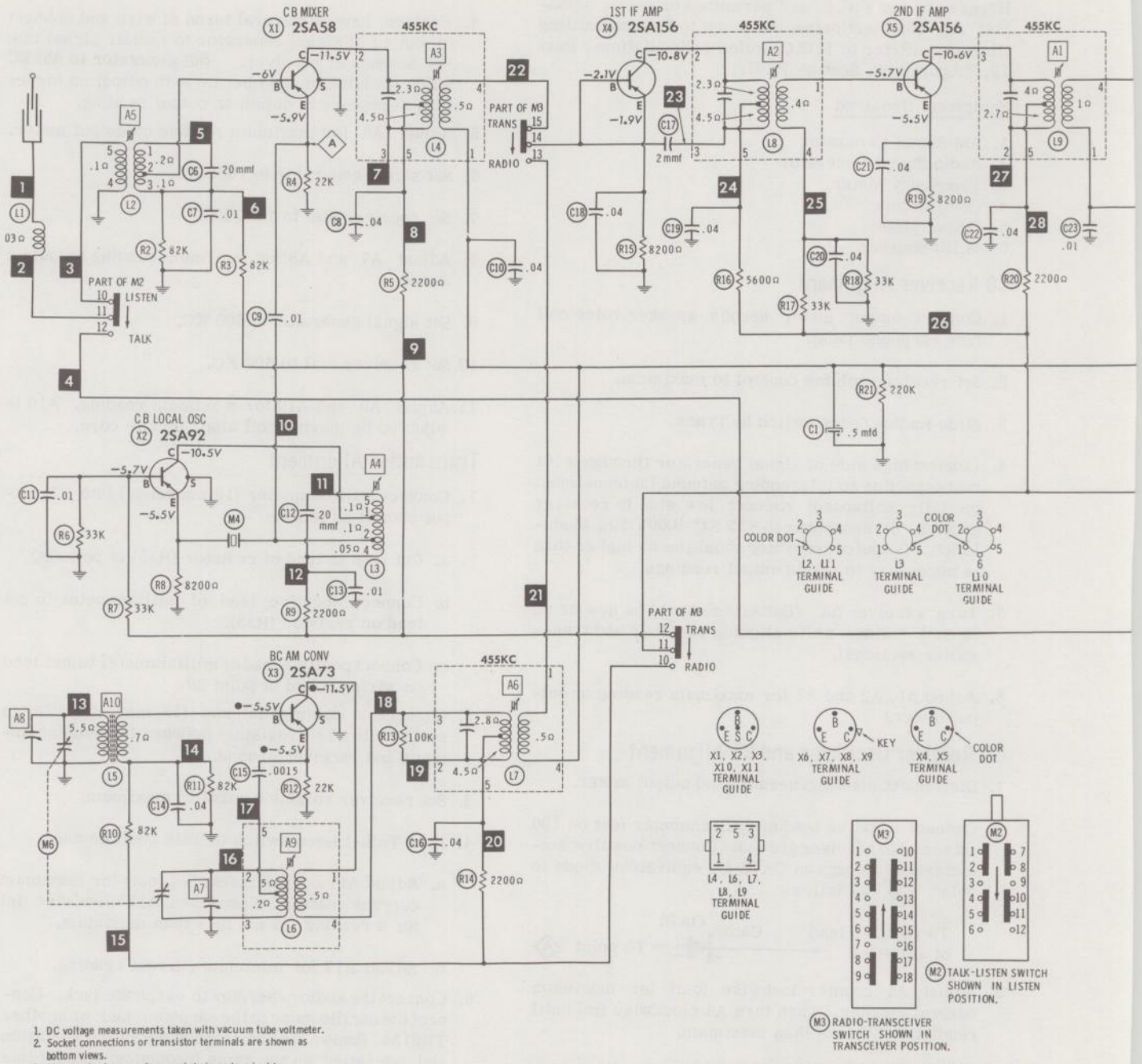

1. DC voltage measurements taken with vacuum tube voltmeter.
2. Socket connections or transistor terminals are shown as bottom views.
3. Measured values are from socket pin or terminal to common ground.
4. Nominal tolerance on component values makes possible a variation of ±15% in voltage and resistance readings.
5. Volume control at maximum, no signal applied for voltage measurements.

VOLTAGE READINGS TAKEN WITH M2 IN LISTEN POSITION AND M3 IN TRANS POSITION, UNLESS OTHERWISE INDICATED.
■ TAKEN WITH M2 IN TALK POSITION AND M3 IN TRANS POSITION.
● TAKEN WITH M2 IN LISTEN POSITION AND M3 IN RADIO POSITION.

A PHOTOFACT STANDARD NOTATION SCHEMATIC
with CIRCUITRACE®

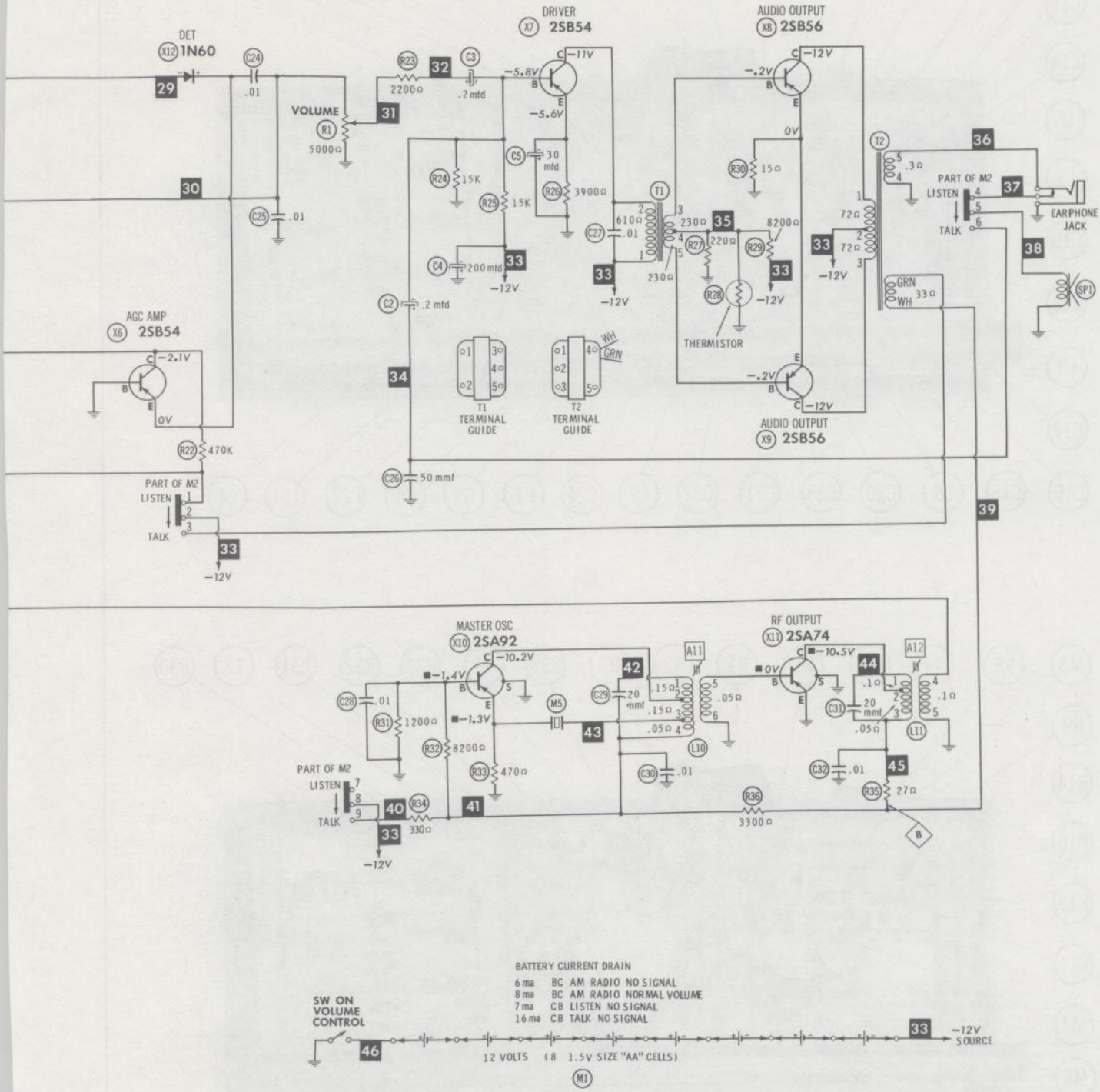

REALTONE MODEL TR-6134

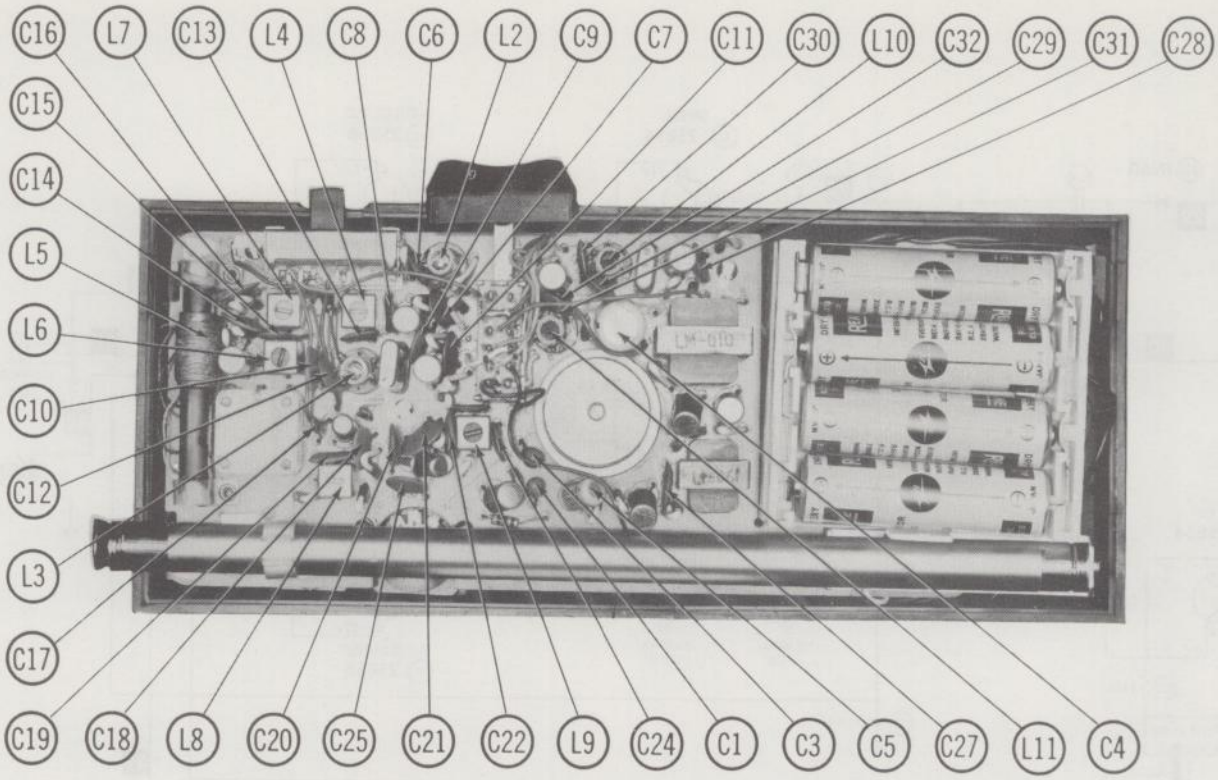
C16
L7
C13
L4
C8
C6
L2
C9
C7
C11
C30
L10
C32
C29
C31
C28
C15
C14
L5
L6
C10
C12
L3
C17
C19
C18
L8
C20
C25
C21
C22
L9
C24
C1
C3
C5
C27
L11
C4

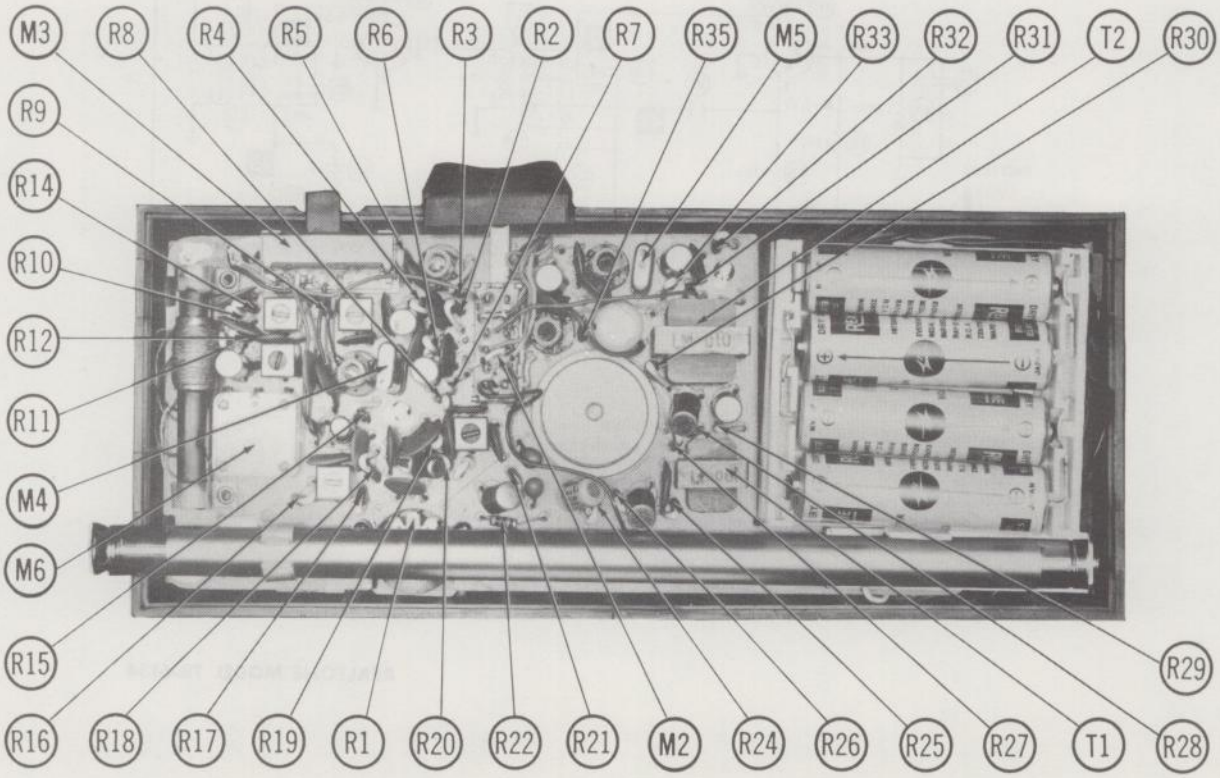
M3
R8
R4
R5
R6
R3
R2
R7
R35
M5
R33
R32
R31
T2
R30
R9
R14
R10
R12
R11
M4
M6
R15
R29
R16
R18
R17
R19
R1
R20
R22
R21
M2
R24
R26
R25
R27
T1
R28

PARTS LIST AND DESCRIPTION

TRANSISTORS

ITEM No.	ORIG. TYPE	USE	REPLACEMENT DATA			NOTES
			DELCO PART No.	GENERAL ELECTRIC PART No.	RCA PART No.	
X1	2SA58	CB Mixer	DS-25	GE-1	2N1179	PNP
X2	2SA92	CB Oscillator	DS-25	GE-1	2N1178	PNP
X3	2SA73	AM Converter			2N412	PNP
X4	2SA156	1st IF Amp.	DS-25	GE-1	2N410	PNP
X5	2SA156	2nd IF Amp.	DS-25	GE-1	2N410	PNP
X6	2SB54	AGC Amp.	DS-26	GE-2	2N406	PNP
X7	2SB54	Driver	DS-26	GE-2	2N406	PNP
X8	2SB56	Output	DS-26	GE-2	2N408	PNP
X9	2SB56	Output	DS-26	GE-2	2N408	PNP
X10	2SA92	Transmitter Osc.	DS-25	GE-1	2N410	PNP
X11	2SA74	Final RF Output	DS-26	GE-2	2N408	PNP
X12	1N60	Detector		1N60	1N60	Diode

ELECTROLYTIC CAPACITORS

ITEM No.	RATING		REPLACEMENT DATA						
	CAP.	VOLT.	REALTONE PART No.	AEROVOX PART No.	CORNELL-DUBILIER PART No.	GENERAL ELECTRIC PART No.	GENERAL INSTRUMENT PART No.	MALLORY PART No.	SPRAGUE PART No.
C1	.5	6	CA0.5	BCD6001	NLW1-6	MT1-1			
C2	.2	6	CA0.2	BCD6001	NLW1-6	MT1-1			
C3	.2	6	CA0.2	BCD6001	NLW1-6	MT1-1			
C4	200	12	V-200-12	BCD10190	ECPB421	MT1-23	MLV200-10	TT15X200	TE-1119.6
C5	30	6	V-30-6	PTT10	NLW30-6	MT1-13	MLV30-6	TT6X30	TE-1056

FIXED CAPACITORS

ITEM No.	RATING	REMARKS	REPLACEMENT DATA					
			AEROVOX PART No.	CENTRALAB PART No.	CORNELL-DUBILIER PART No.	ELMENCO PART No.	MALLORY PART No.	SPRAGUE PART No.
C6	20			DD-200	L10Q2	CCD-200	GP420	5GA-Q20
C7	.01		TTD-01	DDM-103	H05S1		TA-110	TG-S10
C8	.04		TTD-05	CK-503	H5		TA-150	TG-S50
C9	.01		TTD-01	DDM-103	H05S1		TA-110	TG-S10
C10	.04		TTD-05	CK-503	H5		TA-150	TG-S50
C11	.01		TTD-01	DDM-103	H05S1		TA-110	TG-S10
C12	20			DD-200	L10Q2	CCD-200	GP420	5GA-D20
C13	.01		TTD-01	DDM-103	H05S1		TA-110	TG-S10
C14	.04		TTD-05	CK-503	H5		TA-150	TG-S50
C15	.0015		BPD-0015	DD-152	BYA10D15	CCD-152	GP215	10TS-D15
C16	.04		TTD-05	CK-503	H5		TA-150	TG-S50
C17	2		NPO-DI 2.2	DTZ-2R2	C10V22C	CCTO-2R2	CNO-522	10TCC-V22
C18	.04		TTD-05	CK-503	H5		TA-150	TG-S50
C19	.04		TTD-05	CK-503	H5		TA-150	TG-S50
C20	.04		TTD-05	CK-503	H5		TA-150	TG-S50
C21	.04		TTD-05	CK-503	H5		TA-150	TG-S50
C22	.04		TTD-05	CK-503	H5		TA-150	TG-S50
C23	.01		TTD-01	DDM-103	H05S1		TA-110	TG-S10
C24	.01		TTD-01	DDM-103	H05S1		TA-110	TG-S10
C25	.01		TTD-01	DDM-103	H05S1		TA-110	TG-S10
C26	50		DI 50	DD-500	L10Q50	CCD-500	GP450	10TS-Q50
C27	.01		TTD-01	DDM-103	H05S1		TA-110	TG-S10
C28	.01		TTD-01	DDM-103	H05S1		TA-110	TG-S10
C29	20			DD-200	L10Q2	CCD-200	GP420	5GA-Q20
C30	.01		TTD-01	DDM-103	H05S1		TA-110	TG-S10
C31	20			DD-200	L10Q2	CCD-200	GP420	5GA-Q20
C32	.01		TTD-01	DDM-103	H05S1		TA-110	TG-S10

CONTROLS

All wattages 1/2 watt, or less, unless otherwise listed.

ITEM No.	USE	RESIST-ANCE	REPLACEMENT DATA				
			REALTONE PART No.	CENTRALAB PART No.	CLAROSTAT PART No.	CTS-IRC PART No.	MALLORY PART No.
R1	Volume & Switch	5000Ω	RV-014				

RESISTORS (Power and Special)

ITEM No.	RATING	REPLACEMENT DATA		
		IRC PART No.	WORKMAN PART No.	REMARKS
R28	Thermistor			#D-22A

ITEM No.	RATING	REPLACEMENT DATA		
		IRC PART No.	WORKMAN PART No.	REMARKS

Realtone Part Number.

PARTS LIST AND DESCRIPTION (CONTINUED)

COILS (RF-IF)

ITEM No.	USE	REPLACEMENT DATA					NOTES
		REALTONE PART No.	MERIT PART No.	MILLER PART No.	STANCOR PART No.	WORKMAN PART No.	
L1	Antenna Loading	HL-010					
L2	Antenna	HA-155					
L3	Oscillator	HO-130					
L4	1st IF	HI-040					
L5	AM Loopstick	HA-015					
L6	AM Oscillator	HO-091					
L7	1st AM IF	HI-043					
L8	2nd IF	HI-051					
L9	3rd IF	HI-062					
L10	Trans. Osc.	HM-010					
L11	RF Tank	HN-010					

TRANSFORMER (DRIVER)

ITEM No.	TURNS RATIO		REPLACEMENT DATA					NOTES
	PRI.	SEC.	REALTONE PART No.	MERIT PART No.	STANCOR PART No.	THORDARSON PART No.	TRIAD PART No.	
T1	1.5	1	LI-061					

TRANSFORMER (AUDIO OUTPUT)

ITEM No.	IMPEDANCE		REPLACEMENT DATA					NOTES
	PRI.	SEC. 1	REALTONE PART No.	MERIT PART No.	STANCOR PART No.	THORDARSON PART No.	TRIAD PART No.	
T2	500Ω CT	6-8Ω	LM-010					
		SEC. 2						
		450Ω						

SPEAKER

ITEM No.	TYPE	REPLACEMENT DATA		NOTES
		REALTONE PART No.	QUAM PART No.	
SP1	2 ½" PM 6-8Ω	AS-088		

BATTERIES

ITEM No.	VOLTAGE	REALTONE PART No.	REPLACEMENT DATA			NOTES
			BURGESS	EVEREADY	MALLORY	
M1	1.5V	703	930 (or AL-9, Hg-9)	1015 (or E91, E9)	M-15R (or MN1500, ZM-9)	4 Used

MISCELLANEOUS

ITEM No.	PART NAME	REALTONE PART No.	NOTES
M2	Switch	SH-087	Talk-Listen (Push-to-talk)
M3	Switch	SH-086	Radio-Trans.-Selector (Slide Type DPST)
M4	Crystal	W6134-2002	Receiving (27.065MC)
	Crystal	W6134-2004	Receiving (27.135MC)
M5	Crystal	W6134-2001	Transmitting (27.065MC)
	Crystal	W6134-2003	Transmitting (27.135MC)
M6	Tuning Cap.	CV-013	2 Gang (AM Receiver)

CABINETS & CABINET PARTS

(When Ordering Specify Model, Chassis & Color)

ITEM	PART No.	ITEM	PART No.
Knob - Volume	W6134-0012	Knob - Talk-Listen	W6134-0020
Knob - Tuning	W6134-0013	Cabinet	W6134-0001

WIRING DATA

General-use Hook-up Wire .... Use BELDEN No. 8530 (Solid) Available in 12 Colors
8524 (Stranded) Available in 12 Colors)
Shielded Antenna Lead ..... Use BELDEN No. 8214 Lowest Loss (RG-8/U Type)
8237 Low Loss (RG-8/U)
8240 (Solid) Miniature (RG-58/U)
8259 (Stranded) Miniature (RG-58A/U)
Coiled Microphone Cable ..... Use BELDEN No. 8499 Single Conductor Shielded (Neoprene)
8498 Single Conductor Shielded (Vinyl)
Ignition Noise Suppression .... Use BELDEN No. 7300-Series Spark-Plug Sets
Bonding Strap ..... Use BELDEN No. 8661 (3/8 In.)

PHOTOFACT®

TRADE NAME: Sonar Model E (Revised)

SUPPLIER: Sonar Radio Corp.
73 Wortman Avenue, Brooklyn, N. Y.

TYPE SET: 9 Tube Transceiver

POWER SUPPLY: 110 - 120 Volts AC, 60 Cycles (or)
6 (or) 12 Volt Storage Battery

RATING: 52 Watts, .5 Amp. @117VAC
8 Amp. @ 6.3VDC
4.1 Amp. @12.6VDC

TUNING RANGE: Any 8 CB Channels 1 thru 23
Receiver may be continuously tuned.

ALIGNMENT INSTRUCTIONS

Suggested Alignment Tools:
A1 thru A6.....GENERAL CEMENT #5097, 8727..... WALSCO #2515
A7 thru A10.....GENERAL CEMENT #8282, 8606, 8606-L..... WALSCO #2526, 2543, 2544
A11 and A13.....GENERAL CEMENT #5000, 5003, 5066..... WALSCO #2512, 2525, 2528
A12.....GENERAL CEMENT #8721, 8722..... WALSCO #2519

RECEIVER ALIGNMENT

SIGNAL GENERATOR	CHANNEL	ADJUST	REMARKS
High side thru .1mfd to pin 6 (grid) of V2 (Mixer), common to chassis. (Tune to 455KC, 400~ Mod.)	Center Channel Used.	A1, A2, A3, A4, A5, A6	Output meter across voice coil. Adjust for maximum deflection.
High side to antenna input, common to chassis (Tune to Channel Frequency.)	Center Channel Used.	A7, A8, A9	Tune-Crystal switch in Tune position. Output meter across voice coil. Adjust for maximum deflection.

TRANSMITTER ALIGNMENT

Only those persons properly licensed are permitted to make repairs or adjustments which may result in illegal operation. (Refer to FCC rules and regulations Part 19, Subpart D, Section 19.71)

The frequency of the transmitter should be checked periodically with a secondary frequency standard to insure proper and legal operation.

Best results will be obtained when adjusting the final RF output circuit if the antenna normally used is connected and the chassis is as nearly in the cabinet as possible.

	CHANNEL	ADJUST	REMARKS
Connect antenna or dummy load. Connect DC probe of VTVM to point (A). Common to chassis.		A10	Key transmitter. Adjust for maximum deflection. Note rate of dropoff on each side of peak and set just below peak on side of gradual dropoff.
Connect antenna or dummy load.		A11, A12, A13	Adjust for maximum brilliance of front panel lamp.

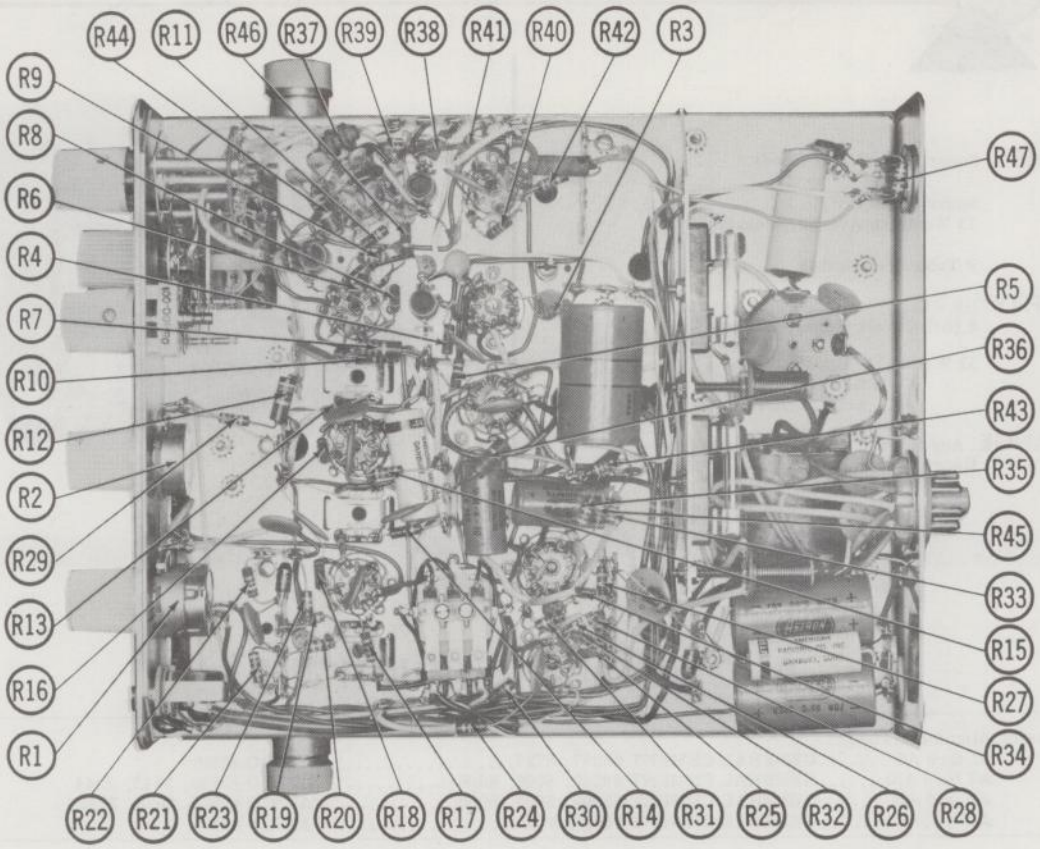
R44
R11
R46
R37
R39
R38
R41
R40
R42
R3
R9
R8
R6
R4
R7
R10
R12
R2
R29
R13
R16
R1
R47
R5
R36
R43
R35
R45
R33
R15
R27
R34
R22
R21
R23
R19
R20
R18
R17
R24
R30
R14
R31
R25
R32
R26
R28

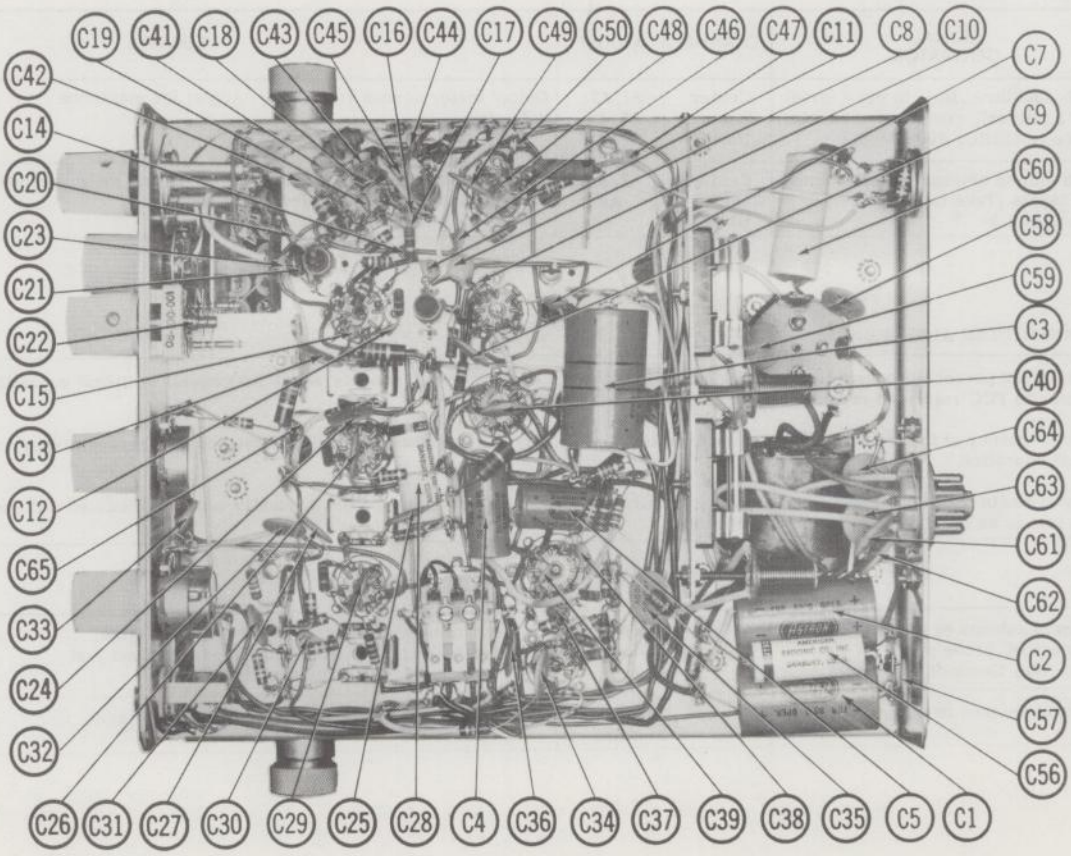
C19
C41
C18
C43
C45
C16
C44
C17
C49
C50
C48
C46
C47
C11
C8
C10
C42
C14
C20
C23
C21
C22
C15
C13
C12
C65
C33
C24
C32
C7
C9
C60
C58
C59
C3
C40
C64
C63
C61
C62
C2
C57
C56
C26
C31
C27
C30
C29
C25
C28
C4
C36
C34
C37
C39
C38
C35
C5
C1

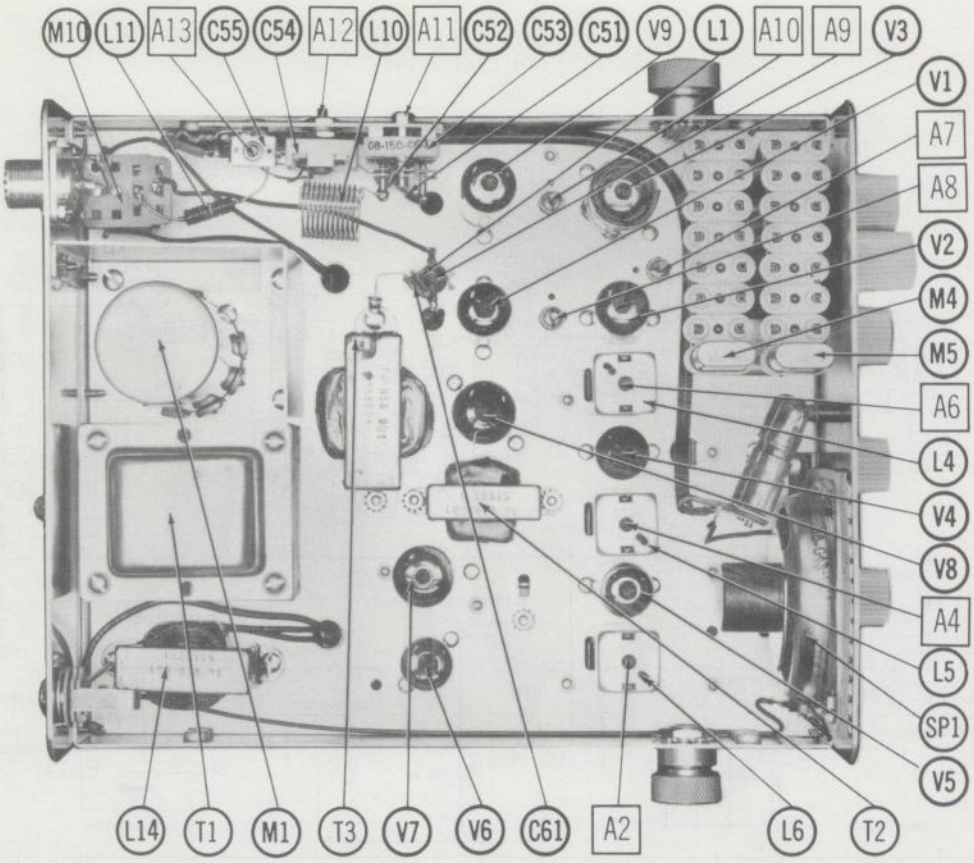
M10
L11
A13
C55
C54
A12
L10
A11
C52
C53
C51
V9
L1
A10
A9
V3
V1
A7
A8
V2
M4
M5
A6
L4
V4
V8
A4
L5
SP1
V5
L14
T1
M1
T3
V7
V6
C61
A2
L6
T2

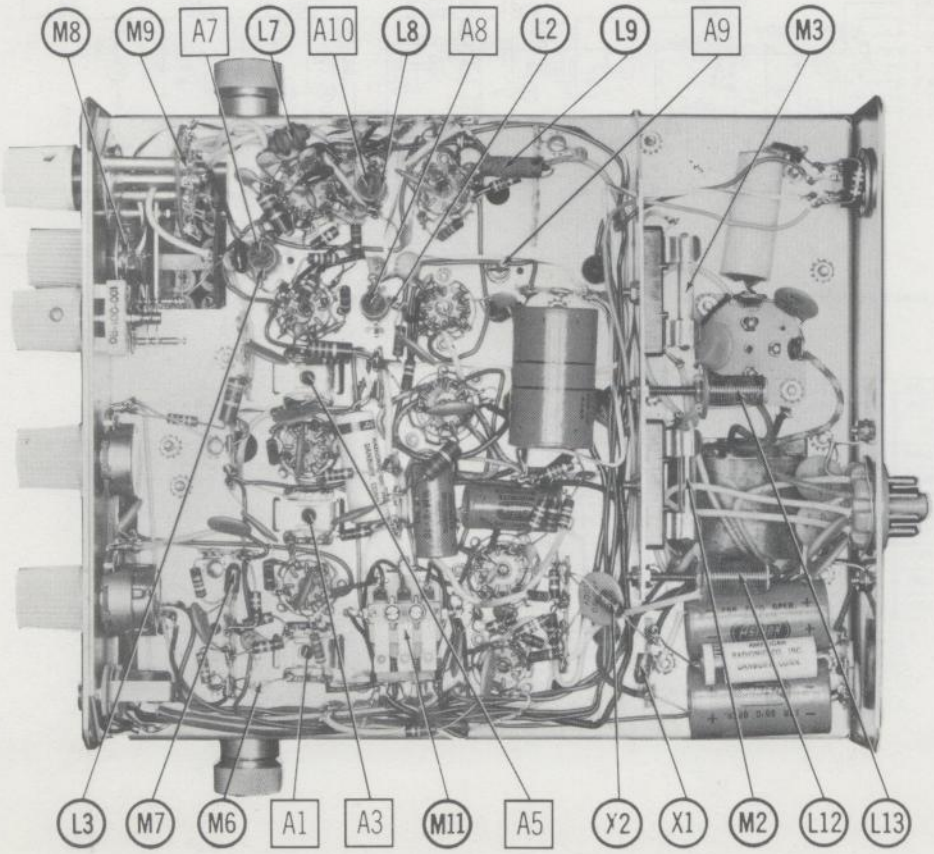
M8
M9
A7
L7
A10
L8
A8
L2
L9
A9
M3
L3
M7
M6
A1
A3
M11
A5
X2
X1
M2
L12
L13

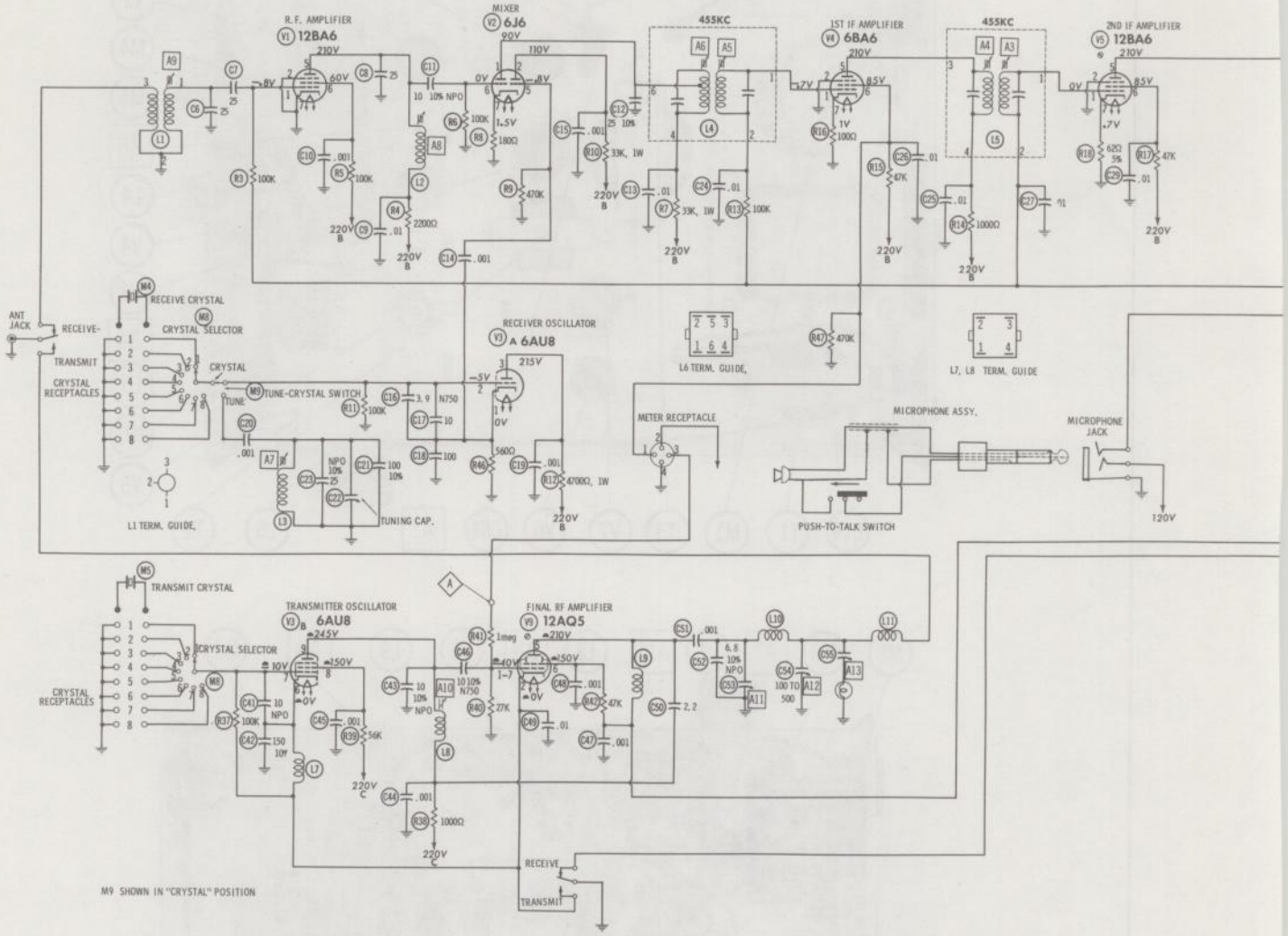

RESISTANCE READINGS

ITEM	TUBE	Pin 1	Pin 2	Pin 3	Pin 4	Pin 5	Pin 6	Pin 7	Pin 8	Pin 9
V1	12BA6	1.6meg	0Ω	FIL	FIL	†2200Ω	†100K	0Ω		
V2	6J6	†35K	†35K	FIL	FIL	470K	100K	180Ω		
V3	6AU8A	560Ω	100K	†4700Ω	FIL	FIL	⌒ 8Ω	⌒ 100K	⌒ 56K	⌒ 1000Ω
V4	6BA6	1.6meg	0Ω	FIL	FIL	†1000Ω	147K	100Ω		
V5	12BA6	1.6meg	0Ω	FIL	FIL	†35Ω	147K	62Ω		
V6	12AU6	1.8meg	0Ω	FIL	FIL	†500K	†470K	0Ω		
V7	12AT7	†520K	2.3meg	11.5K	FIL	FIL	†535Ω	470K	220Ω	FIL
V8	12BH7	†345Ω	130Ω	220Ω	FIL	FIL	†325Ω	110Ω	220Ω	FIL
V9	12AQ5	27K	⌒ 0Ω	FIL	FIL	⌒ †935Ω	⌒ 147K	27K		

ALL MEASUREMENTS TAKEN IN "RECEIVE" POSITION, UNLESS NOTED.
† MEASURED FROM OUTPUT OF X2.
⌒ MEASURED IN "TRANSMIT" POSITION.

⊖ See parts list for alternate value or application.
1. Voltage measurements taken with vacuum tube voltmeter.
2. All controls set for normal operation, no signal applied.
3. Measured values are from socket pin or terminal to common ground.
4. All terminals viewed from bottom unless otherwise designated.
5. Numbers assigned to terminals may not be found on the unit.
6. Supply voltage maintained at rated value for voltage readings.

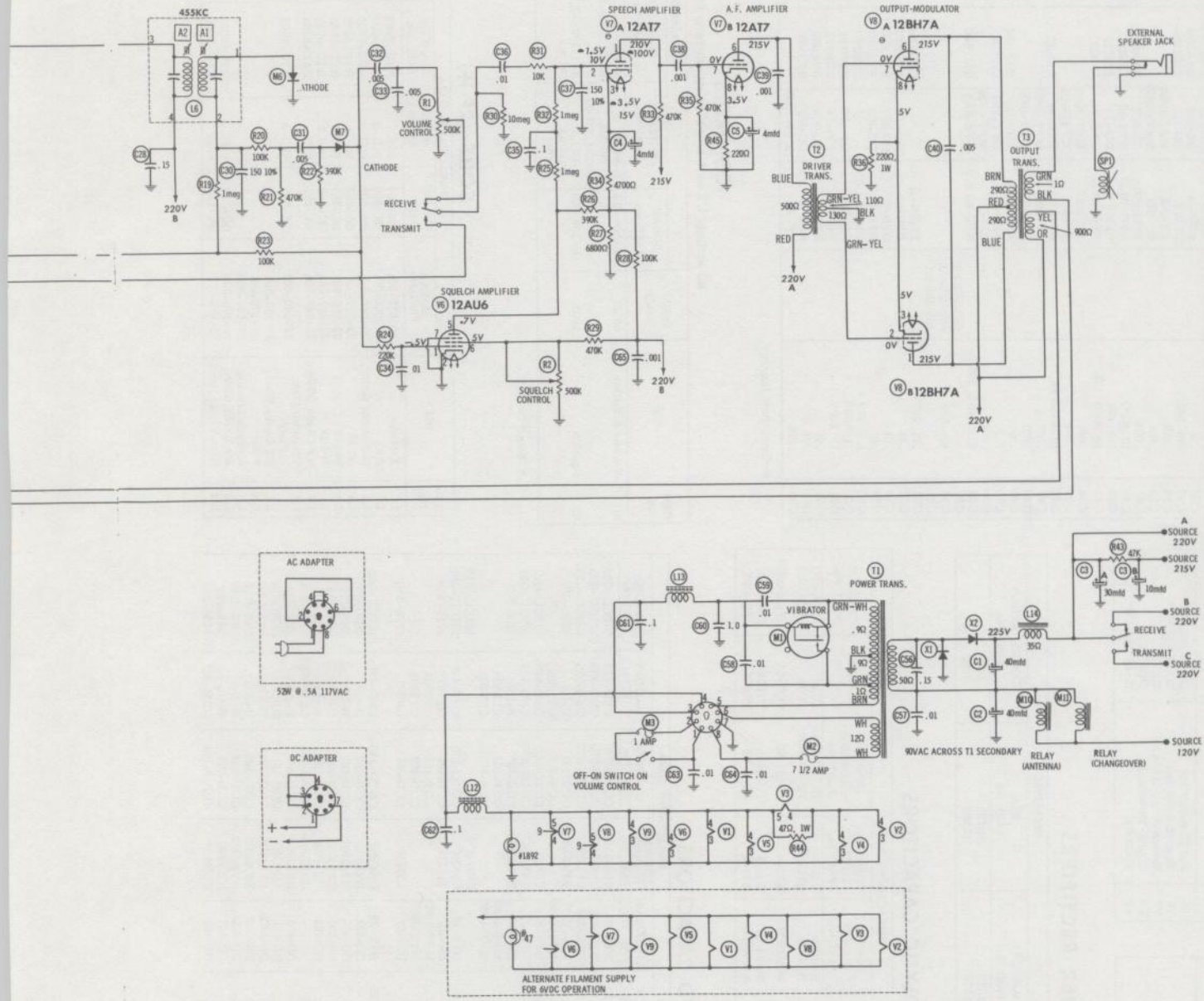

SONAR MODEL E (Revised)

PARTS LIST AND DESCRIPTION

TUBES

◆ AMPEREX ◆ GENERAL ELECTRIC ◆ RCA ◆ RAYTHEON ◆ SYLVANIA ◆

ITEM No.	USE	TYPE
V1	RF Amplifier	12BA6
V2	Mixer	6J6
V3	Receive Oscillator-Transmit Oscillator	6AU8A
V4	1st IF Amplifier	6BA6
V5	2nd IF Amplifier	12BA6 (6BA6)*
V6	Squelch Amplifier	12AU6 (6AU6)*
V7	Speech Amp.-AF Amp.	12AT7
V8	Output-Modulator	12BH7A
V9	Final RF	12AQ5 (6AQ5)*

* 6 Volt Versions.

POWER RECTIFIERS

ITEM No.	MEASURED CURRENT	ORIGINAL Part or Type No.	RECTIFIERS		
			MALLORY PART No.	RCA PART No.	SARKES TARZIAN PART No.
X1	.080A	19-040-004	1N2070	1N1763	40H
X2	.080A	19-040-004	1N2070	1N1763	40H

ELECTROLYTIC CAPACITORS

ITEM No.	RATING		REPLACEMENT DATA						
	CAP.	VOLT.	SONAR PART No.	AEROVOX PART No.	CORNELL-DUBILIER PART No.	GENERAL ELECTRIC PART No.	GENERAL INSTRUMENT PART No.	MALLORY PART No.	SPRAGUE PART No.
C1	40	250	06-130-003	PRS1580	BR4025	QT1-14	TD-40-250	TC58	TVA-1511
C2	40	250	06-130-003	PRS1580	BR4025	QT1-14	TD-40-250	TC58	TVA-1511
C3A	30	350	06-230-001	PRS2410	BBRD2245	QT2-4	TDLD-30	TCD-65	TVA-2730
B	10	350							
C4	4	150	06-130-002	PRS1400	BBR4-150	QT1-2	TD-4-25	TT50X4	TE-1123
C5	4	150	06-130-002	PRS1400	BBR4-150	QT1-2	TD-4-25	TT50X4	TE-1123

FIXED CAPACITORS

ITEM No.	RATING	REMARKS	REPLACEMENT DATA					
			AEROVOX PART No.	CENTRALAB PART No.	CORNELL-DUBILIER PART No.	ELMENCO PART No.	MALLORY PART No.	SPRAGUE PART No.
C6	25 NPO 10%		NPO-DI 25	DTZ-25	C10Q25C	CCTO-270	CNO-425	10TCC-Q25
C7	25 NPO 10%		NPO-DI 25	DTZ-25	C10Q25C	CCTO-270	CNO-425	10TCC-Q25
C8	25 NPO 10%		NPO-DI 25	DTZ-25	C10Q25C	CCTO-270	CNO-425	10TCC-Q25
C9	.01		BPD-01	DD-103	BYA10S1	CCD-103	B-110	5HK-S10
C10	.001		EF-001	MFT-1000		CCF-102	CT280A	
C11	10 NPO 10%		NPO-DI 10	DTZ-10	C10Q1C	CCTO-100	CNO-410	10TCC-Q10
C12	25 NPO 10%		NPO-DI 25	DTZ-25	C10Q25C	CCTO-270	CNO-425	10TCC-Q25
C13	.01		BPD-01	DD-103	BYA10S1	CCD-103	B-110	5HK-S10
C14	.001		EF-001	MFT-1000		CCF-102	CT280A	
C15	.001		EF-001	MFT-1000		CCF-102	CT280A	
C16	3.9 N750				C10V4C			10TCC-V39
C17	10 NPO 10%		NPO-DI 10	DTZ-10	C10Q1C	CCTO-100	CNO-410	10TCC-Q10
C18	100 10%		DI 100	DD-101	L10T10	CCD-101	GP310	10TS-T10
C19	.001		EF-001	MFT-1000		CCF-102	CT280A	
C20	.001		EF-001	MFT-1000		CCD-102	CT280A	
C21	100 10%		DI 100	DD-101	L10T10	CCD-101	GP310	10TS-T10
C22		#08-100-001						
C23	25 NPO 10%		NPO-DI 25	DTZ-25	C10Q25C	CCTO-270	CNO-425	10TCC-Q25
C24	.01		BPD-01	DD-103	BYA10S1	CCD-103	B-110	5HK-S10
C25	.01		BPD-01	DD-103	BYA10S1	CCD-103	B-110	5HK-S10
C26	.01		BPD-01	DD-103	BYA10S1	CCD-103	B-110	5HK-S10
C27	.01		BPD-01	DD-103	BYA10S1	CCD-103	B-110	5HK-S10
C28	.15 200V		P288N-15		CUB2P15	2DP-3-154	GEM-2015	2TM-P15
C29	.01		BPD-01	DD-103	BYA10S1	CCD-103	B-110	5HK-S10
C30	150 10%		DI 150	DD-151	L10T15	CCD-151	GP315	10TS-T15
C31	.005		BPD-005	DD-502	BYA10D5	CCD-502	B-250	5HK-D50
C32	.005		BPD-005	DD-502	BYA10D5	CCD-502	B-250	5HK-D50
C33	.005		BPD-005	DD-502	BYA10D5	CCD-502	B-250	5HK-D50
C34	.01		BPD-01	DD-103	BYA10S1	CCD-103	B-110	5HK-S10
C35	.1		P488N-1	DF-104	CUB4P1	4DP-3-104	GEM-401	4TM-P10

FIXED CAPACITORS (cont)

ITEM No.	RATING	REMARKS	REPLACEMENT DATA					
			AEROVOX PART No.	CENTRALAB PART No.	CORNELL-DUBILIER PART No.	ELMENCO PART No.	MALLORY PART No.	SPRAGUE PART No.
C36	.01		BPD-01	DD-103	BYA10S1	CCD-103	B-110	5HK-S10
C37	150 10%		DI 150	DD-151	L10T15	CCD-151	GP315	10TS-T15
C38	.001		EF-001	MFT-1000		CCF-102	CT280A	
C39	.001		EF-001	MFT-1000		CCF-102	CT280A	
C40	.005		BPD-005	DD-502	BYA10D5	CCD-502	B-250	5HK-D50
C41	10 NPO		NPO-DI 10	DTZ-10	C10Q1C	CCTO-100	CNO-410	10TCC-Q10
C42	150 10%		DI 150	DD-151	L10T15	CCD-151	GP315	10TS-T15
C43	10 NPO 10%		NPO-DI 10	DTZ-10	C10Q1C	CCTO-100	CNO-410	10TCC-Q10
C44	.001		EF-001	MFT-1000		CCF-102	CT280A	
C45	.001		EF-001	MFT-1000		CCF-102	CT280A	
C46	10 N750 5%		NPO-DI 10	DTZ-10	C10Q1C	CCTO-100	CNO-410	10TCC-Q10
C47	.001		EF-001	MFT-1000		CCF-102	CT280A	
C48	.001		EF-001	MFT-1000		CCF-102	CT280A	
C49	.01		BPD-01	DD-103	BYA10S1	CCD-103	B-110	5HK-S10
C50	2.2		NPO-SI 2.2	DTZ-2R2	C10V3C	CCTO-2R2	CNO-522	10TCC-V22
C51	.001		EF-001	MFT-1000		CCF-102	CT280A	
C52	6.8 NPO 10%		NPO-DI 6.8	DTZ-6R8	C10V68C	CCTO-6R8	CNO-568	10TCC-V68
C53		#08-150-003						
C54	100-500	#09-210-001						
C55		#09-110-011						
C56	.15 200V		P288N-15		CUB2P15	2DP-3-154	GEM-2015	2TM-P15
C57	.01		BPD-01	DD-103	BYA10S1	CCD-103	B-110	5HK-S10
C58	.01		BPD-01	DD-103	BYA10S1	CCD-103	B-110	5HK-S10
C59	.01		BPD-01	DD-103	BYA10S1	CCD-103	B-110	5HK-S10
C60	1.0 50V		P288N-1.0		CUB2W1	1DP-5-105	GEM-21	2TM-M1
C61	.1 200V		P488N-1	DF-104	CUB4P1	4DP-3-104	GEM-401	4TM-P10
C62	.1 200V		P488N-1	DF-104	CUB4P1	4DP-3-104	GEM-401	4TM-P10
C63	.01		BPD-01	DD-103	BYA10S1	CCD-103	B-110	5HK-S10
C64	.01		BPD-01	DD-103	BYA10S1	CCD-103	B-110	5HK-S10
C65	.001		EF-001	MFT-1000		CCF-102	CT280A	

Sonar Part Number.

CONTROLS

All wattages 1/2 watt, or less, unless otherwise listed.

ITEM No.	USE	RESIST-ANCE	REPLACEMENT DATA				
			SONAR PART No.	CENTRALAB PART No.	CLAROSTAT PART No.	CTS-IRC PART No.	MALLORY PART No.
R1	Volume & Switch	500K	03-504-018	B-60-S, or (F2-500K, SU204, KR-2)	A47-500K-Z/ RS-2, SWE-20	Q13-133, 76-2, or (BU2, CF25, SS1, WF)*	U48, US-27 or (UA55A, SF1000, US42)
R2	Squelch	500K	03-504-003	B-60, or (F1-500K, SU204)	A47-500K-Z/ RS-2	Q13-133 or (BU1, CF25, SS1, DC1)*	U48, or (UA55A, SF1000)

* "SNAPTROL"

COILS (RF-IF)

ITEM No.	USE	REPLACEMENT DATA					NOTES
		SONAR PART No.	MERIT PART No.	MILLER PART No.	STANCOR PART No.	WORKMAN PART No.	
L1	Antenna	22-030-001	SW-609	6250	RTC-8569	T232A	
L2	RF	22-050-001	SW-608	6171-A	RTC-8609	T219	
L3	Oscillator Grid	22-040-001	SW-608	6171-A	RTC-8609	T216	
L4	1st IF	22-010-014	BC-352	12-C1	RTC-8632	T607	
L5	2nd IF	22-010-002	BC-353	12-C2	RTC-8633	T608	
L6	3rd IF	22-010-002	BC-353	12-C2	RTC-8633	T608	
L7	RF Choke (250uh)	22-060-001	TV-185	6181	RTC-8598	T315	
L8	Transmit Osc. Plate	22-040-002	SW-608	6171-A	RTC-8609	T216	
L9	RF Choke (21uh)	21-060-005					
L10	Final	22-070-001					
L11	Antenna Loading	22-090-003					
L12	Fil. Choke (10uh)	22-100-003	BC-537	5220	RTC-9182	T963	
L13	Hash Choke (10uh)	22-100-003	BC-537	5220	RTC-9182	T963	

PARTS LIST AND DESCRIPTION (CONTINUED)

FILTER CHOKE

ITEM No.	RATINGS			REPLACEMENT DATA					NOTES
	CURRENT (Measured)	DC RES.	INDUCTANCE (0 CURRENT 1000~)	SONAR PART No.	MERIT PART No.	STANCOR PART No.	THORDARSON PART No.	TRIAD PART No.	
L14	.080A	35Ω	1HY	14-070-001					

TRANSFORMER (POWER)

ITEM No.	RATING			REPLACEMENT DATA					NOTES
	PRI.	SEC. 1	SEC. 2	SONAR PART No.	MERIT PART No.	STANCOR PART No.	THORDARSON PART No.	TRIAD PART No.	
T1	117VAC @ .48A (or) 12.6VDC @ 4.1A	90VAC @ .080A DC		14-010-017 *					* Part #14-010-018 used in 6VDC version

TRANSFORMER (DRIVER)

ITEM No.	TURNS RATIO		REPLACEMENT DATA					NOTES
	PRI.	SEC.	SONAR PART No.	MERIT PART No.	STANCOR PART No.	THORDARSON PART No.	TRIAD PART No.	
T2	1	1	14-020-001					

TRANSFORMER (AUDIO OUTPUT)

ITEM No.	IMPEDANCE		REPLACEMENT DATA					NOTES
	PRI.	SEC. 1	SONAR PART No.	MERIT PART No.	STANCOR PART No.	THORDARSON PART No.	TRIAD PART No.	
T3	16K CT	SEC. 2	14-050-001					

SPEAKER

ITEM No.	TYPE	REPLACEMENT DATA		NOTES
		SONAR PART No.	QUAM PART No.	
SP1	3" PM	36-043-001		

VIBRATOR

ITEM No.	TYPE	INPUT VOLTS	FRE-QUENCY	REPLACEMENT DATA			NOTES
				SONAR PART No.	CORNELL-DUBILIER PART No.	MALLORY PART No.	
M1	Interrupter	12.6	115~	29-030-001	6301	G-1601	12 Volt Versions
	Interrupter	6.3	115~	29-030-002	5301	1601	6 Volt Versions

FUSES

ITEM No.	TYPE	RATING	REPLACEMENT DATA					
			SONAR PART No.		LITTELFUSE PART No.		BUSS PART No.	
			FUSE	HOLDER	FUSE	HOLDER	FUSE	HOLDER
M2	3AG	7½A 32V	42-010-014		31107.5 (3AG 7½A 32V)	357001	AGC 7½	4405
	3AG	10A 32V	42-010-008		311010 (3AG 10A 32V)	357001	AGC 10	4405
	3AG	6A 32V	42-010-009		311006 (3AG 6A 32V)	357001	AGC 6	4405
M3	3AG	1A 250V	42-010-016		312001 (3AG 1A 250V)	357001	AGC 1	4405
	3AG	2A 250V	42-010-006		312002 (3AG 2A 250V)	357001	AGC 2	4405

MISCELLANEOUS

ITEM No.	PART NAME	SONAR PART No.	NOTES
M4	Crystal		Receive (order by freq. & channel desired)
M5	Crystal		Transmit (order by freq. & channel desired)
M6	Diode	19-050-001	Detector (1N295)
M7	Diode	19-040-003	Squelch
M8	Switch	10-030-002	Crystal Selector (Rotary Wafer Type)
M9	Switch	10-030-001	Crystal-Manual Tune (Rotary Wafer Type)
M10	Relay	16-030-002	Antenna (SPDT)
M11	Relay	16-010-002	Change-over (3PDT)
	Microphone Assy.	43-010-011	Includes Plug, Cable, and Push-to-talk Switch

WIRING DATA

General-use Hook-up Wire .... Use BELDEN No. 8530 (Solid) Available in 12 Colors
8524 (Stranded) Available in 12 Colors
Shielded Antenna Lead ..... Use BELDEN No. 8214 Lowest Loss (RG-8/U Type)
8237 Low Loss (RG-8/U)
8240 (Solid) Miniature (RG-58/U)
8259 (Stranded) Miniature (RG-58A/U)
Coiled Microphone Cable ..... Use BELDEN No. 8497 3 Conductor- 1 Shielded for Press-to-Talk (Neoprene)
8496 3 Conductor- 1 Shielded for Press-to-Talk (Vinyl)
Ignition Noise Suppression .... Use BELDEN No. 7300-Series Spark-Plug Sets
Bonding Strap ..... Use BELDEN No. 8661 (3/8 In.)

TRADE NAME: Sony Model CB-901

SUPPLIER: Sony Corp. of America
514 Broadway, New York 12, N. Y.

TYPE SET: 9 Transistor Transceiver

POWER SUPPLY: 12 Volts DC

RATING: 8MA@12VDC (Receive, No Signal)
18MA@12VDC (Transmit, No Modulation)

TUNING RANGE: Any one CB Channel 1 thru 23

ALIGNMENT INSTRUCTIONS

Suggested Alignment Tools: A1 thru A8...GENERAL CEMENT #9089, 8728A

RECEIVER ALIGNMENT

Connect DC VTVM across Volume Control.

	SIGNAL GENERATOR	CHANNEL	ADJUST	REMARKS
1.	High side thru .01mfd to base of X1, common to ground. Tune to 455KC (Unmod.).		A1, A2, A3	Adjust for maximum deflection.
2.	Radiate signal into receiver of antenna. Tune to channel frequency.		A4, A5, A6	Adjust for maximum deflection.

TRANSMITTER ALIGNMENT

ONLY THOSE PERSONS PROPERLY LICENSED ARE PERMITTED TO MAKE REPAIRS OR ADJUSTMENTS WHICH MAY RESULT IN ILLEGAL OPERATION. (REFER TO FCC RULES & REGULATIONS PART 19, SUBPART D, SECTION 19.71)

	SPECIAL INSTRUCTIONS	INDICATOR	ADJUST	REMARKS
1.	Maintain supply voltage at 12V during alignment.	RF Wattmeter (or Field Strength Meter)	A7, A8	Remove jumper. (Refer to capacitor photo). Connect DC milliameter. Key transmitter. Adjust for maximum on RF wattmeter and MINIMUM on DC milliameter. Retouch A6 for maximum deflection on RF wattmeter.

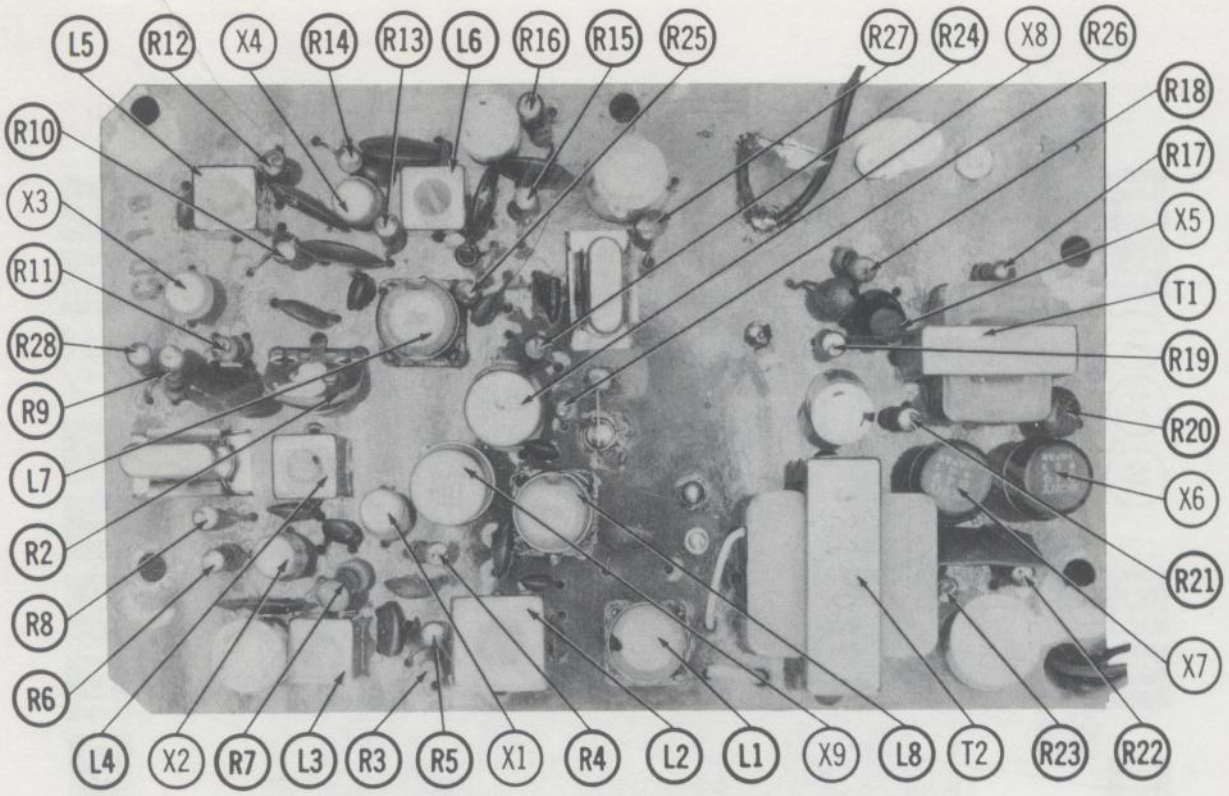
L5
R12
X4
R14
R13
L6
R16
R15
R25
R27
R24
X8
R26
R18
R17
X5
T1
R19
R20
X6
R21
X7
R10
X3
R11
R28
R9
L7
R2
R8
R6
L4
X2
R7
L3
R3
R5
X1
R4
L2
L1
X9
L8
T2
R23
R22

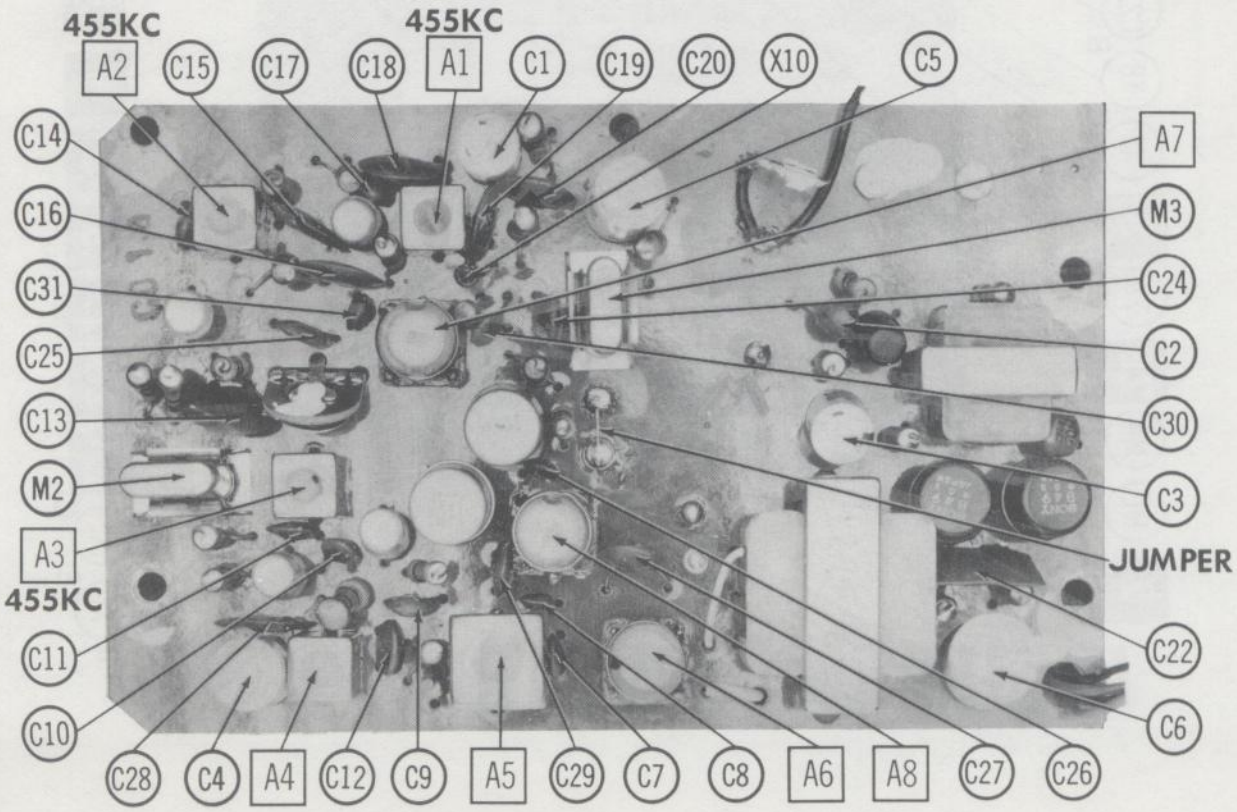
455KC
A2
C15
C17
C18
455KC
A1
C1
C19
C20
X10
C5
A7
M3
C24
C2
C30
C3
JUMPER
C22
C6
C14
C16
C31
C25
C13
M2
A3
455KC
C11
C10
C28
C4
A4
C12
C9
A5
C29
C7
C8
A6
A8
C27
C26

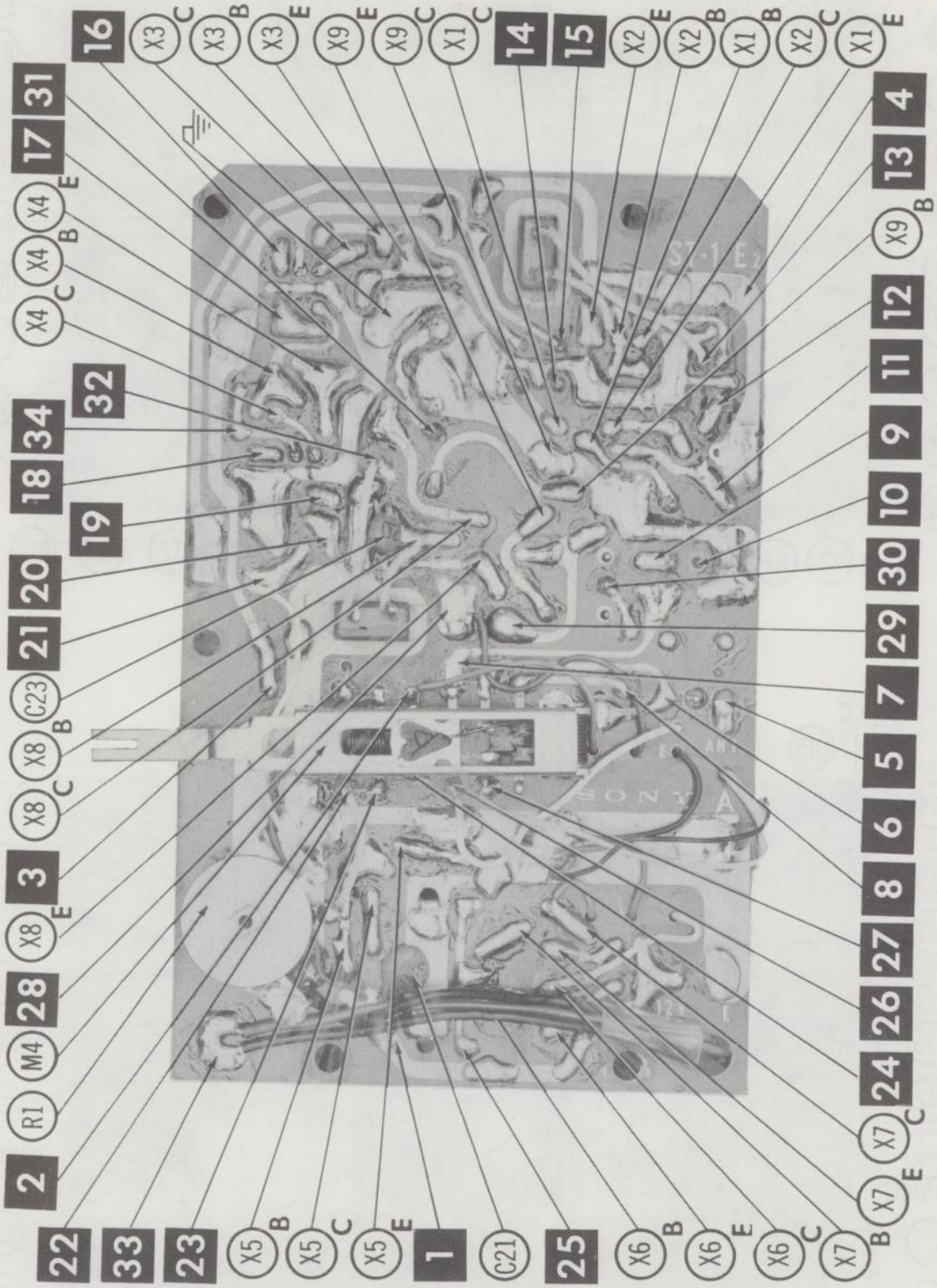

A Howard W. Sams CIRCUITRACE® Photo

PARTS LIST AND DESCRIPTION

TRANSISTORS

ITEM No.	ORIG. TYPE	USE	REPLACEMENT DATA			NOTES
			DELCO PART No.	GENERAL ELECTRIC PART No.	RCA PART No.	
X1	A122	Mixer	DS25	GE-1		PNP
X2	A122	Rec. Osc.	DS25	GE-1		PNP
X3	C76	1st IF Amp.		GE-7		NPN
X4	C76	2nd IF Amp.		GE-7		NPN
X5	D64	Driver-Speech Amp.		GE-8	2N647	NPN
X6	B49	Output-Modulator	DS26	GE-2	2N408	PNP
X7	B49	Output-Modulator	DS26	GE-2	2N408	PNP
X8	2SA70	Trans. Osc.	DS34	GE-1		PNP
X9	TT116	Final Amp.	DS34	GE-1		PNP

POWER RECTIFIERS & SIGNAL DIODES

ITEM No.	MEASURED CURRENT	ORIGINAL Part or Type No.	RECTIFIERS			NOTES
			MALLORY PART No.	RCA PART No.	SARKES TARZIAN PART No.	
X10		1T23				Detector

ELECTROLYTIC CAPACITORS

ITEM No.	RATING		REPLACEMENT DATA						
	CAP.	VOLT.	SONY PART No.	AEROVOX PART No.	CORNELL-DUBILIER PART No.	GENERAL ELECTRIC PART No.	MALLORY PART No.	PYRAMID PART No.	SPRAGUE PART No.
C1	30	6		BCD6025	ECPB412	MT1-10	TT6X30	MLV30-6	VL-1092
C2	.3	6							
C3	30	6		BCD6025	ECPB412	MT1-10	TT6X30	MLV30-6	VL-1092
C4	30	15		BCD15025	ECPB412	MT1-10	TT15X30	MLV25-15	TE-1158
C5	30	15		BCD15025	ECPB412	MT1-10	TT15X30	MLV25-15	TE-1158
C6	50	15		BCD15050	NLW50-15	MT1-16		MLV50-15	TE-1160

FIXED CAPACITORS

ITEM No.	RATING	REMARKS	REPLACEMENT DATA					
			AEROVOX PART No.	CENTRALAB PART No.	CORNELL-DUBILIER PART No.	ELMENCO PART No.	MALLORY PART No.	SPRAGUE PART No.
C7	100		DI-100	DD-101	LI0T1	CCD-101	GP310	10TS-T10
C8	20		DI-20	DD-200	LI0Q2	CCD-200	GP420	10TS-Q20
C9	.01		TTD-01	CK-103	H05S1		TA-110	TG-S10
C10	20		DI-20	DD-200	LI0Q2	CCD-200	GP420	10TS-Q20
C11	.01		TTD-01	CK-103	H05S1		TA-110	TG-S10
C12	.001		DI-1000	DD-102	LI0D1	CCD-102	GP210	10TS-D10
C13	.04		TTD-05	CK-503	H05S5			TG-S50
C14	1		NPO-DI 1	TCZ-1			CNO-510	10TCC-V10
C15	.04		TTD-05	CK-503	H05S5			TG-S50
C16	.04		TTD-05	CK-503	H05S5			TG-S50
C17	1		NPO-DI 1	TCZ-1			CNO-510	10TCC-V10
C18	.04		TTD-05	CK-503	H05S5			TG-S50
C19	.02		TTD-02	CK-203	H05S2		TA-120	TG-S20
C20	.02		TTD-02	CK-203	H05S2		TA-120	TG-S20
C21	.01		TTD-01	CK-103	H05S1		TA-110	TG-S10
C22	.1		TTD-1	CK-104	H05P1			TG-P10
C23	20		DI-20	DD-200	LI0Q2	CCD-200	GP420	10TS-Q20
C24	.002		DI-2000	DD-202	LI0D2	CCD-202	GP220	10TS-D20
C25	.01		TTD-01	CK-103	H05S1		TA-110	TG-S10
C26	12		DI-12	DD-120	LI0Q12	CCD-120	GP412	10TS-Q12
C27	.001		DI-1000	DD-102	LI0D1	CCD-102	GP210	10TS-D10
C28	.04		TTD-05	CK-503	H05S5			10TS-S50
C29	.005		TTD-005	CK-502	H05D5	CCD-502	TA-250	TG-D50
C30	20		DI-20	DD-200	LI0Q2	CCD-200	GP420	10TS-Q20
C31	12		DI-12	DD-120	LI0Q12	CCD-120	GP412	10TS-Q12

CONTROLS

All wattages 1/2 watt, or less, unless otherwise listed.

ITEM No.	USE	RESIST-ANCE	REPLACEMENT DATA				
			SONY PART No.	CENTRALAB PART No.	CLAROSTAT PART No.	CTS-IRC PART No.	MALLORY PART No.
R1	Volume & Switch	5000Ω	36.09				
R2	Transmit Osc. Bias	2000Ω					

COILS (RF-IF)

ITEM No.	USE	REPLACEMENT DATA					NOTES
		SONY PART No.	MERIT PART No.	MILLER PART No.	STANCOR PART No.	WORKMAN PART No.	
L1	Ant. Load						
L2	Ant. Coil						
L3	Rec. Osc.						
L4	1st IF						
L5	2nd IF						
L6	3rd IF						
L7	Transmit Osc.						
L8	Final						

TRANSFORMER (DRIVER)

ITEM No.	TURNS RATIO		REPLACEMENT DATA					NOTES
	PRI.	SEC.	SONY PART No.	MERIT PART No.	STANCOR PART No.	THORDARSON PART No.	TRIAD PART No.	
T1	1.3	1	423-045					

TRANSFORMER (AUDIO OUTPUT)

ITEM No.	IMPEDANCE		REPLACEMENT DATA					NOTES
	PRI.	SEC.	SONY PART No.	MERIT PART No.	STANCOR PART No.	THORDARSON PART No.	TRIAD PART No.	
T2	1000Ω CT	6-8Ω	427-026					

BATTERIES

ITEM No.	VOLTAGE	SONY PART No.	REPLACEMENT DATA			NOTES
			BURGESS	EVEREADY	MALLORY	
M1	1.5V		930	1015	M-15R (Zinc-Carbon) MN-1500 (Manganese) ZM-9 (Mercury)	8 Used

MISCELLANEOUS

ITEM No.	PART NAME	SONY PART No.	NOTES
M2	Crystal		Receive
M3	Crystal		Transmit
M4	Switch		Receive-Transmit

SPEAKER

ITEM No.	TYPE	REPLACEMENT DATA	
		SONY PART No.	QUAM PART No.
SP1	2" PM 6-8Ω		

WIRING DATA

General-use Hook-up Wire .... Use BELDEN No. 8530 (Solid) Available in 12 Colors
8524 (Stranded) Available in 12 Colors)
Shielded Antenna Lead ..... Use BELDEN No. 8214 Lowest Loss (RG-8/U Type)
8237 Low Loss (RG-8/U)
8240 (Solid) Miniature (RG-58/U)
8259 (Stranded) Miniature (RG-58A/U)
Coiled Microphone Cable ..... Use BELDEN No. 8499 Single Conductor Shielded (Neoprene)
8498 Single Conductor Shielded (Vinyl)
Ignition Noise Suppression .... Use BELDEN No. 7300-Series Spark-Plug Sets
Bonding Strap ..... Use BELDEN No. 8661 (3/8 In.)

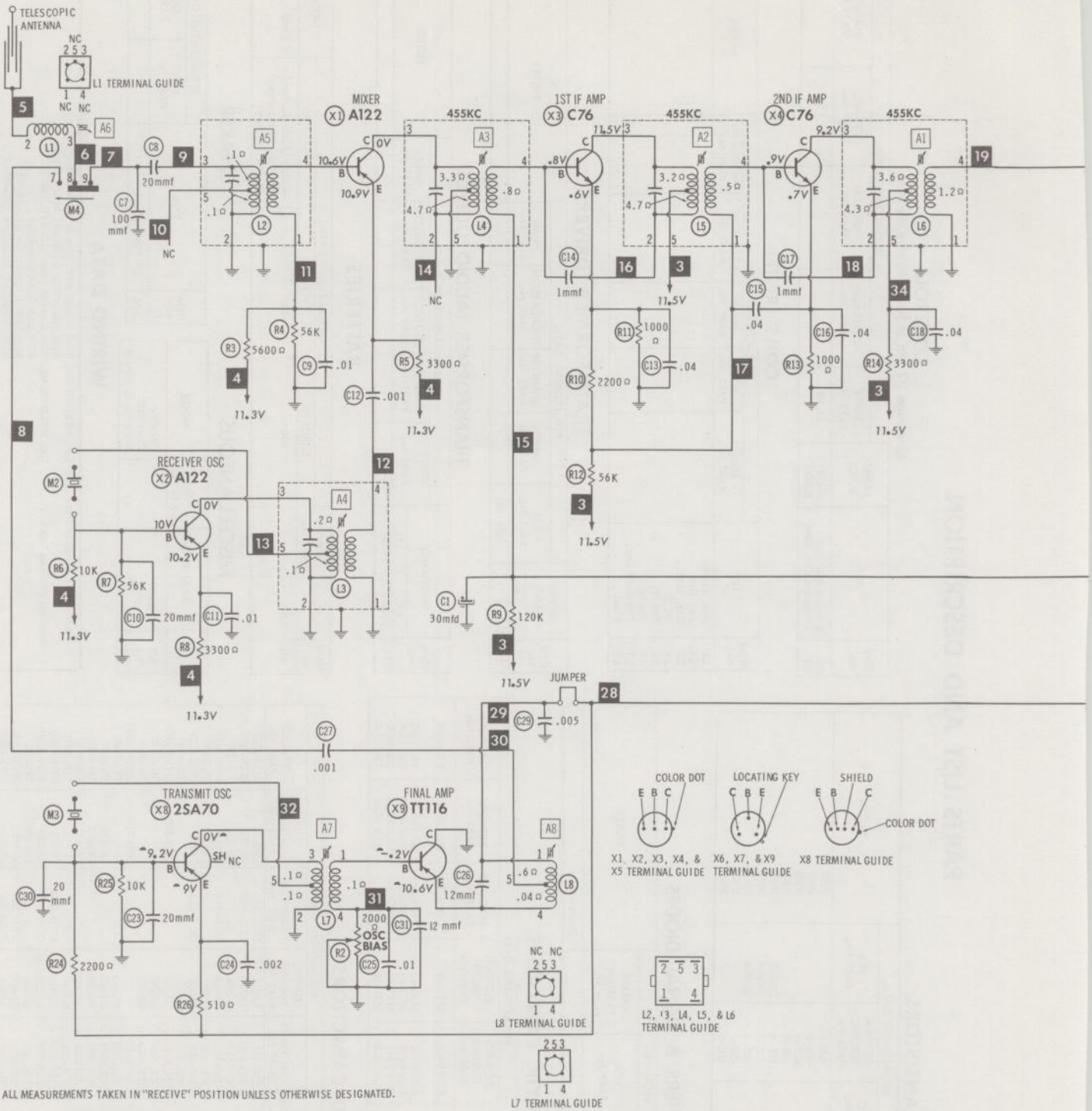

ALL MEASUREMENTS TAKEN IN "RECEIVE" POSITION UNLESS OTHERWISE DESIGNATED.

⊕ TAKEN IN "TRANSMIT" POSITION.

NUMBERS ASSIGNED TO COILS, SWITCHES, PLUGS, SOCKETS, AND TRANSFORMERS ARE TO FACILITATE CIRCUIT TRACING OR COMPONENT REPLACEMENT AND MAY NOT NECESSARILY BE FOUND ON THE UNIT.

RESISTANCE MEASUREMENTS NOT GIVEN BECAUSE OF THE WIDE VARIATION IN INTERNAL TRANSISTOR RESISTANCE.

1. DC voltage measurements taken with vacuum tube voltmeter.
2. Socket connections or transistor terminals are shown as bottom views.
3. Measured values are from socket pin or terminal to common ground.
4. Nominal tolerance on component values makes possible a variation of ±15% in voltage and resistance readings.

A PHOTOFACT STANDARD NOTATION SCHEMATIC with CIRCUITRACE®

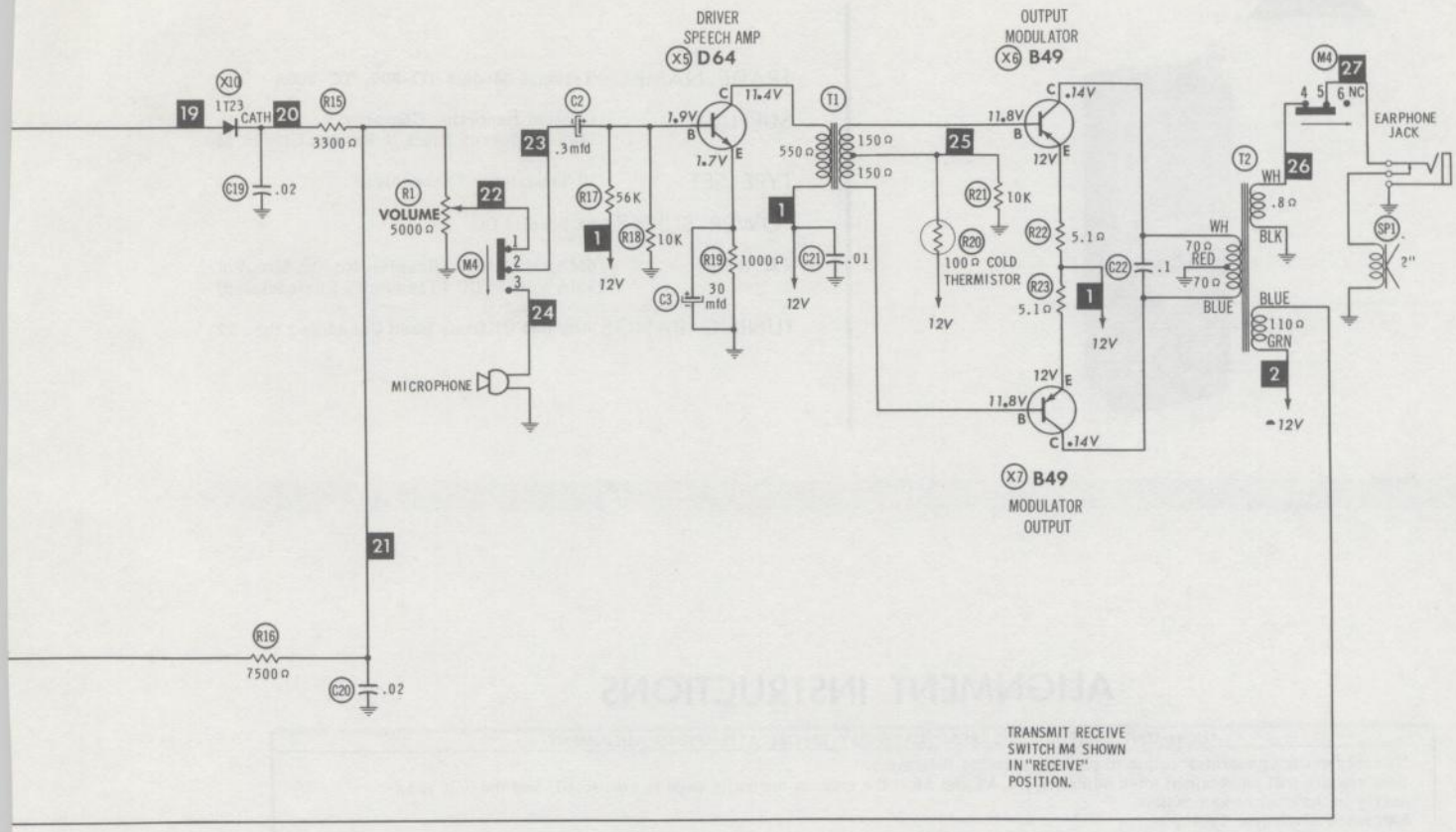

TRANSMIT RECEIVE
SWITCH M4 SHOWN
IN "RECEIVE"
POSITION.

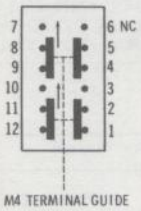

M4 TERMINAL GUIDE

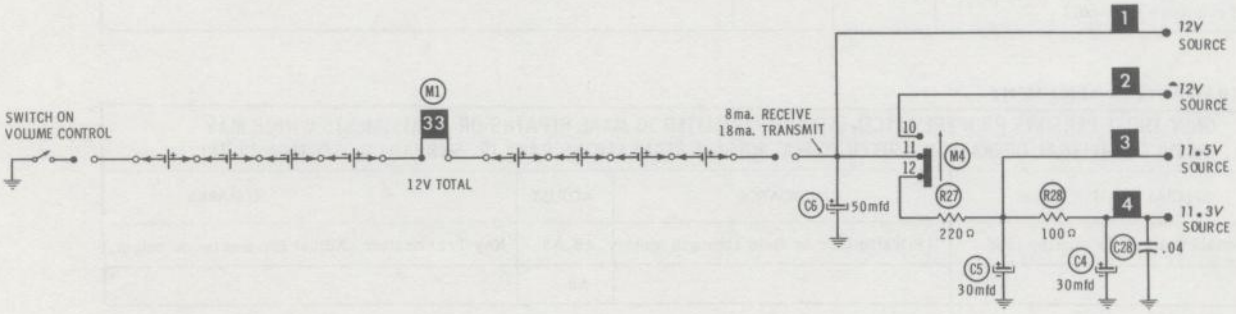

SONY MODEL CB-901

SONY MODEL CB-901

TRADE NAME: Triumph Models TC-900, TC-900A

SUPPLIER: Custom Importing Company
1409-11 Murray Road, N. Kansas City 16, Mo.

TYPE SET: 10 Transistor Transceiver

POWER SUPPLY: 10.5 Volts DC

RATING: 6MA @ 10.5VDC (Receive, No Sig. Min. Vol.)
14MA @ 10.5VDC (Transmit, Unmodulated)

TUNING RANGE: Any one Citizens Band Channels 1 thru 22

ALIGNMENT INSTRUCTIONS

ALIGNMENT INSTRUCTIONS—READ CAREFULLY BEFORE ATTEMPTING ALIGNMENT

Use only enough generator output to provide a usable indication.
Best results will be obtained when adjusting A5, A7 and A8 if the antenna normally used is connected, and the unit is as nearly in the cabinet as possible.
Suggested Alignment Tools:

A1, A2, A3.....GENERAL CEMENT #5000, 5003, 5066, 8271, 8272, 8276, 8277, 8290, 8609, 8722, 9150, 9298
WALSCO #2515, 2516, 2518, 2519, 2525, 2541

A4 thru A8.....GENERAL CEMENT #8282, 8606, 8606-L, 9091
WALSCO #2526, 2541, 2542, 2543, 2544

RECEIVER ALIGNMENT

Connect DC VTVM across volume control

SIGNAL GENERATOR	CHANNEL	ADJUST	REMARKS
High side to antenna terminal, low side to ground. Tune to 455KC (Unmod.)		A1, A2, A3	Adjust for maximum deflection.
High side to antenna terminal, low side to ground. Tune to Channel Frequency (Unmod.)		A4, A5	Adjust for maximum deflection.

TRANSMITTER ALIGNMENT

ONLY THOSE PERSONS PROPERLY LICENSED ARE PERMITTED TO MAKE REPAIRS OR ADJUSTMENTS WHICH MAY RESULT IN ILLEGAL OPERATION. (REFER TO FCC RULES & REGULATIONS PART 19, SUBPART D, SECTION 19.71)

SPECIAL INSTRUCTIONS	INDICATOR	ADJUST	REMARKS
Connect antenna or dummy load.	RF Wattmeter or field strength meter.	A6, A7	Key Transmitter. Adjust for maximum output.
	"	A8	"

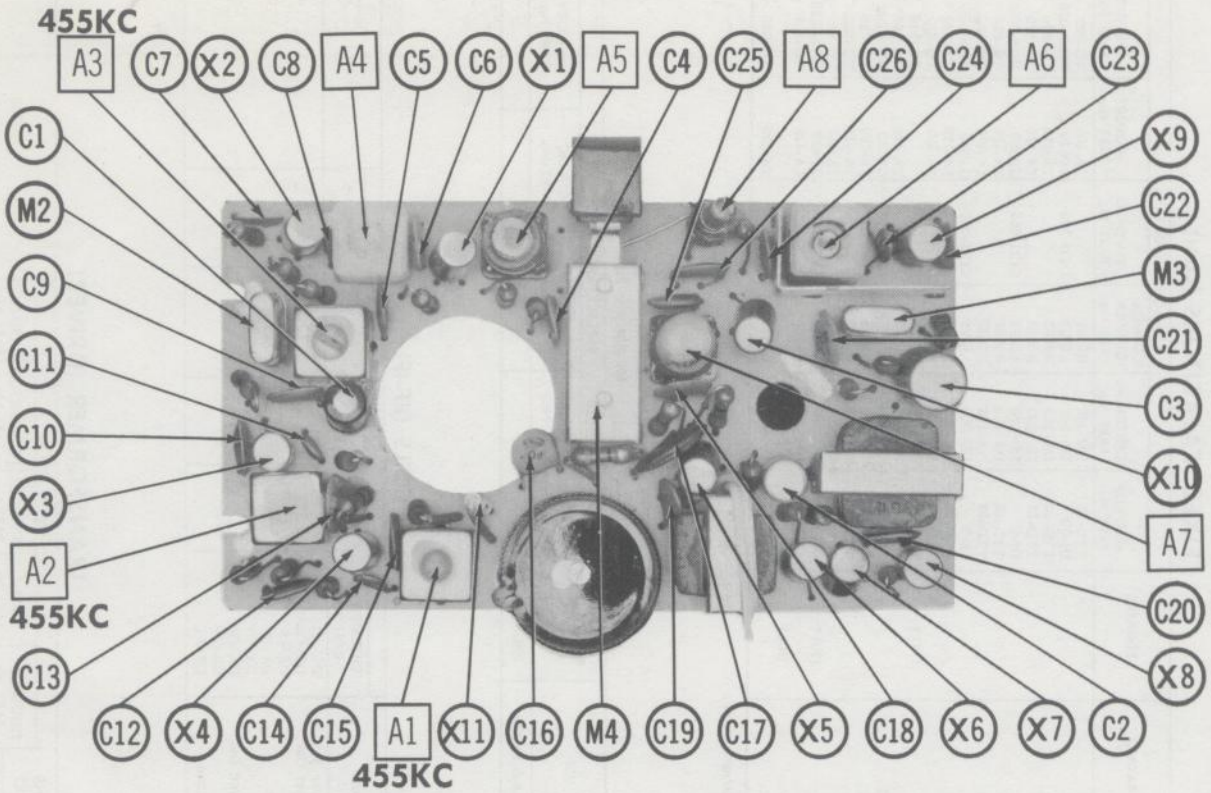

CHASSIS TOP VIEW — ALIGNMENT, CAPACITOR & MISC. IDENT.

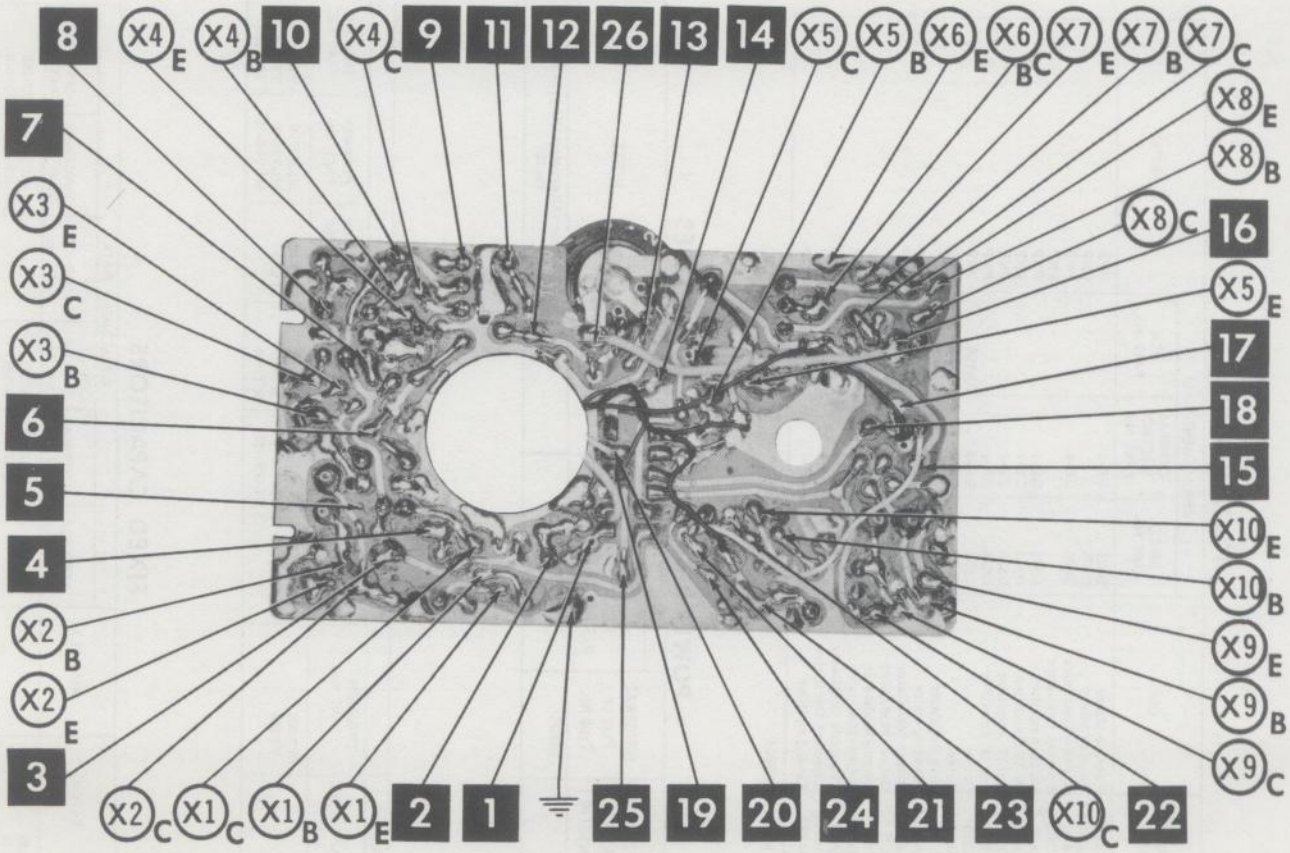

A Howard W. Sams CIRCUITRACE Photo

PRINTED BOARD

PARTS LIST AND DESCRIPTION

TRANSISTORS

ITEM No.	ORIG. TYPE	USE	REPLACEMENT DATA			NOTES
			DELCO PART No.	GENERAL ELECTRIC PART No.	RCA PART No.	
X1	2SA82	Receive Mixer	DS25	GE-1		PNP
	2SA103DA †	Receive Mixer	DS25			PNP
X2	2SA80	Receive Oscillator	DS25	GE-1		PNP
	2SA103DA †	Receive Oscillator				PNP
X3	2SA12	1st IF Amplifier	DS25	GE-1		PNP
	2SA101 †	1st IF Amplifier	DS25	GE-1		PNP
X4	2SA12	2nd IF Amplifier	DS25	GE-1		PNP
	2SA101 †	2nd IF Amplifier	DS25	GE-1		PNP
X5	2SB75	Driver	DS26	GE-2	2N406	PNP
	2SB171 †	Driver	DS26	GE-2	2N406	PNP
X6	HV-15	Bias Regulator	DS26	GE-2	1N2326	
	MA-23 †	Bias Regulator				
X7	2SB77	Output-Modulator	DS26	GE-2	2N408	PNP
	2SB172 †	Output-Modulator	DS26	GE-2	2N408	PNP
X8	2SB77	Output-Modulator	DS26	GE-2	2N408	PNP
	2SB172 †	Output-Modulator	DS26	GE-2	2N408	PNP
X9	2SA80	Transmit Oscillator	DS25	GE-1		PNP
	2SA103DA †	Transmit Oscillator				PNP
X10	2SA246	Final Amplifier	DS25	GE-1		PNP

† Used in Model TC-900A

POWER RECTIFIERS & SIGNAL DIODES

ITEM No.	CURRENT RATING (Measured)	ORIGINAL Part or Type No.	RECTIFIERS		DIODES	NOTES
			RCA PART No.	SARKES TARZIAN PART No.		
X11		1N60				Detector (Alternates 1NA4, 1N34A, OA70)

ELECTROLYTIC CAPACITORS

ITEM No.	RATING		REPLACEMENT DATA						
	CAP.	VOLT.	TRIUMPH PART No.	AEROVOX PART No.	CORNELL-DUBILIER PART No.	GENERAL ELECTRIC PART No.	MALLORY PART No.	PYRAMID PART No.	SPRAGUE PART No.
C1	30	3	VF306	PTT10	NLW30-6	MT1-13	TT6X30	MLV30-6	TE-1092
C2	30	3	VF306	PTT10	NLW30-6	MT1-13	TT6X30	MLV30-6	TE-1092
C3	50	12			NLW50-15	MT1-16		MLV50-15	TE-1133

FIXED CAPACITORS

ITEM No.	RATING	REMARKS	REPLACEMENT DATA					
			AEROVOX PART No.	CENTRALAB PART No.	CORNELL-DUBILIER PART No.	ELMENCO PART No.	MALLORY PART No.	SPRAGUE PART No.
C4	.01		TTD-01	DM-103	H05S1		TA-110	TG-S10
C5	.01		TTD-01	DM-103	H05S1		TA-110	TG-S10
C6	.02		TTD-02	DA-203	H05S2		TA-120	TG-S20

FIXED CAPACITORS (cont)

ITEM No.	RATING	REMARKS	REPLACEMENT DATA					
			AEROVOX PART No.	CENTRALAB PART No.	CORNELL-DUBILIER PART No.	ELMENCO PART No.	MALLORY PART No.	SPRAGUE PART No.
C7	.01		TTD-01	DM-103	H05S1		TA-110	TG-S10
C8	30		DI-30	DD-300	L10Q3	CCD-300	GP430	10TS-Q30
C9	.02		TTD-02	DA-203	H05S2		TA-120	TG-S20
C10	.02		TTD-02	DA-203	H05S2		TA-120	TG-S20
C11	5		DI-5	DD-050	L10V5	CCD-050	GP550	10TS-V50
C12	.02		TTD-02	DA-203	H05S2		TA-120	TG-S20
C13	.02		TTD-02	DA-203	H05S2		TA-120	TG-S20
C14	5		DI-5	DD-050	L10V5	CCD-050	GP550	10TS-V50
C15	.02		TTD-02	DA-203	H05S2		TA-120	TG-S20
C16	.01		TTD-01	DM-103	H05S1		TA-110	TG-S10
C17	.1	(.5) †	TTD-1	DA-104	H05P1			TG-P10
C18	.02		TTD-02	DA-203	H05S2		TA-120	TG-S20
C19	.002		DI-2000	DM-202	L10D2	CCD-202	GP220	10TS-D20
C20	.02		TTD-02	DA-203	H05S2		TA-120	TG-S20
C21	.02		TTD-02	DA-203	H05S2		TA-120	TG-S20
C22	.01		TTD-01	DM-103	H05S1		TA-110	TG-S10
C23	40	(30) †	DI-39	DD-390	L10Q39	CCD-390	GP439	10TS-Q39
C24	.01		TTD-01	DM-103	H05S1		TA-110	TG-S10
C25	30	(10) †						
C26	.02		TTD-02	DA-203	H05S2		TA-120	TG-S20

† Alternate Value.

CONTROLS

All wattages 1/2 watt, or less, unless otherwise listed.

ITEM No.	USE	RESIST-ANCE	REPLACEMENT DATA				
			TRIUMPH PART No.	CENTRALAB PART No.	CLAROSTAT PART No.	CTS-IRC PART No.	MALLORY PART No.
R1	Volume & Switch	10K	DX-VC				

COILS (RF-IF)

ITEM No.	USE	REPLACEMENT DATA					NOTES
		TRIUMPH PART No.	Merit PART No.	Miller PART No.	Stancor PART No.	Workman PART No.	
L1	Receiver Ant.	DX-AA					
L2	Receiver Osc.	DX-OSA					
L3	1st IF	DX-IN	BC-574				
L4	2nd IF	DX-IS	BC-575				
L5	3rd IF	DX-OT	BC-576				
L6	Transmit Osc.	DX-OA					
L7	Final	DX-TA					
L8	Ant. Load	DX-AL					

TRANSFORMER (DRIVER)

ITEM No.	TURNS RATIO		REPLACEMENT DATA					NOTES
	PRI.	SEC.	TRIUMPH PART No.	MERIT PART No.	STANCOR PART No.	THORDARSON PART No.	TRIAD PART No.	
T1	1.2	1	DX-IT					

PARTS LIST AND DESCRIPTION (CONTINUED)

TRANSFORMER (AUDIO OUTPUT)

ITEM No.	IMPEDANCE		REPLACEMENT DATA					NOTES
	PRI.	SEC. 1	TRIUMPH PART No.	Merit PART No.	Stancor PART No.	Thordarson PART No.	Triad PART No.	
T2	700Ω	6-8Ω	DX-MT					
		SEC. 2						
		900Ω						

SPEAKER

ITEM No.	TYPE			REPLACEMENT DATA		NOTES
	SIZE	FIELD	V. C. IMP.	TRIUMPH PART No.	QUAM PART No.	
SP1	2 1/4"	PM	6-8Ω	DX-S		

BATTERIES

ITEM No.	VOLTAGE	TRIUMPH PART No.	REPLACEMENT DATA						NOTES
			BURGESS		EVEREADY		MALLORY		
			"A"	"B"	"A"	"B"	"A"	"B"	
M1	$1\frac{1}{2}$V			930		1015		M-15R	7 Required

MISCELLANEOUS

ITEM No.	PART NAME	TRIUMPH PART No.	NOTES
M2	Crystal	DX-R7	Receive (Channel 7 Only)
M3	Crystal	DX-T7	Transmit (Channel 7 Only)
M4	Switch	DX-PT	Receive-Transmit (Spring-Loaded Slide Type)
	Antenna	DX-CA	Telescoping

CABINETS & CABINET PARTS

(When Ordering Cabinets & Cabinet Parts, Specify Model, Chassis & Color)

NAME	PART NO.	DESCRIPTION
Push Button	DX-SB	
Knob	DX-VCB	Volume
Case	DX-MC	Metal

WIRING DATA

General-use Hook-up Wire .... Use BELDEN No. 8530 (Solid) Available in 12 Colors
8524 (Stranded) Available in 12 Colors)
Shielded Antenna Lead ..... Use BELDEN No. 8214 Lowest Loss (RG-8/U Type)
8237 Low Loss (RG-8/U)
8240 (Solid) Miniature (RG-58/U)
8259 (Stranded) Miniature (RG-58A/U)
Coiled Microphone Cable ..... Use BELDEN No. 8499 Single Conductor Shielded (Neoprene)
8498 Single Conductor Shielded (Vinyl)
Ignition Noise Suppression .... Use BELDEN No. 7300-Series Spark-Plug Sets
Bonding Strap ..... Use BELDEN No. 8661 (3/8 In.)

CHASSIS—TOP VIEW
RESISTOR & INDUCTOR IDENT.

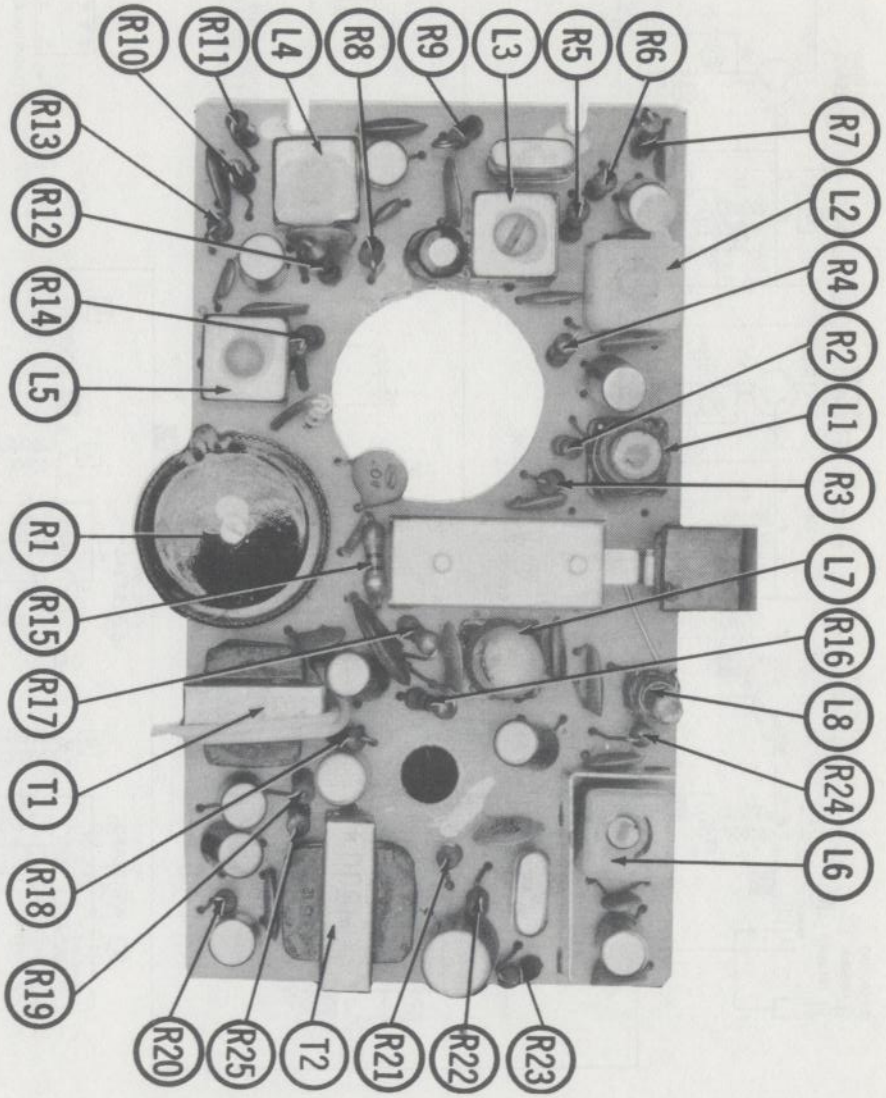

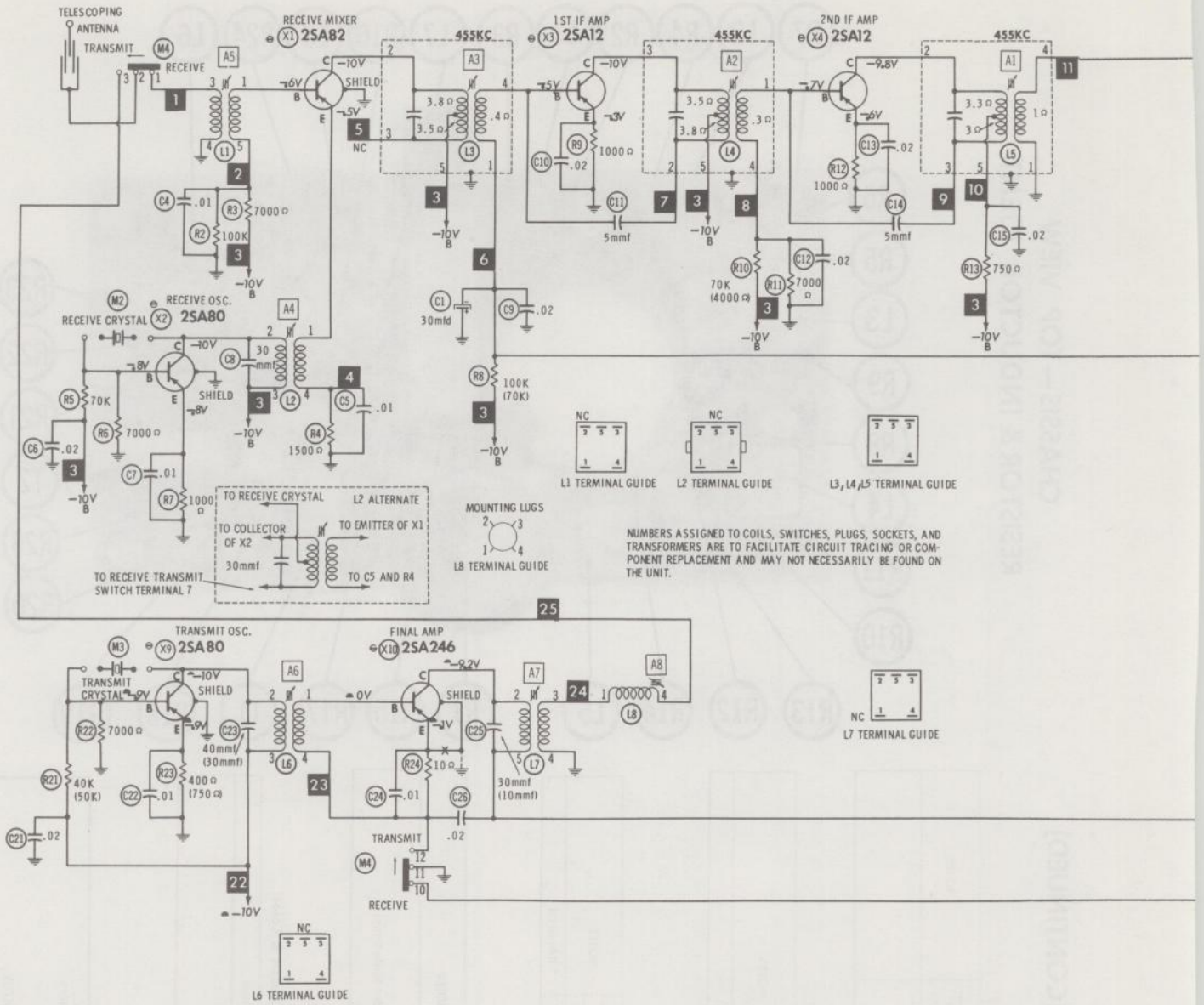

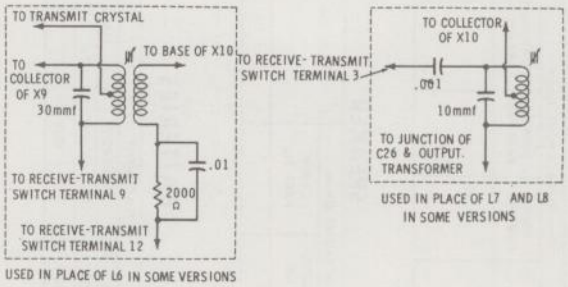

● SEE PARTS LIST FOR ALTERNATE VALUE OR APPLICATION

RESISTANCE MEASUREMENTS NOT GIVEN BECAUSE OF THE WIDE VARIATION IN INTERNAL TRANSISTOR RESISTANCE.

1. DC voltage measurements taken with vacuum tube voltmeter.
2. Socket connections or transistor terminals are shown as bottom views.
3. Measured values are from socket pin or terminal to common ground.
4. Nominal tolerance on component values makes possible a variation of ±15% in voltage and resistance readings.
5. Volume control at maximum, no signal applied for voltage measurements.

A PHOTOFACT STANDARD NOTATION SCHEMATIC
with CIRCUITRACE

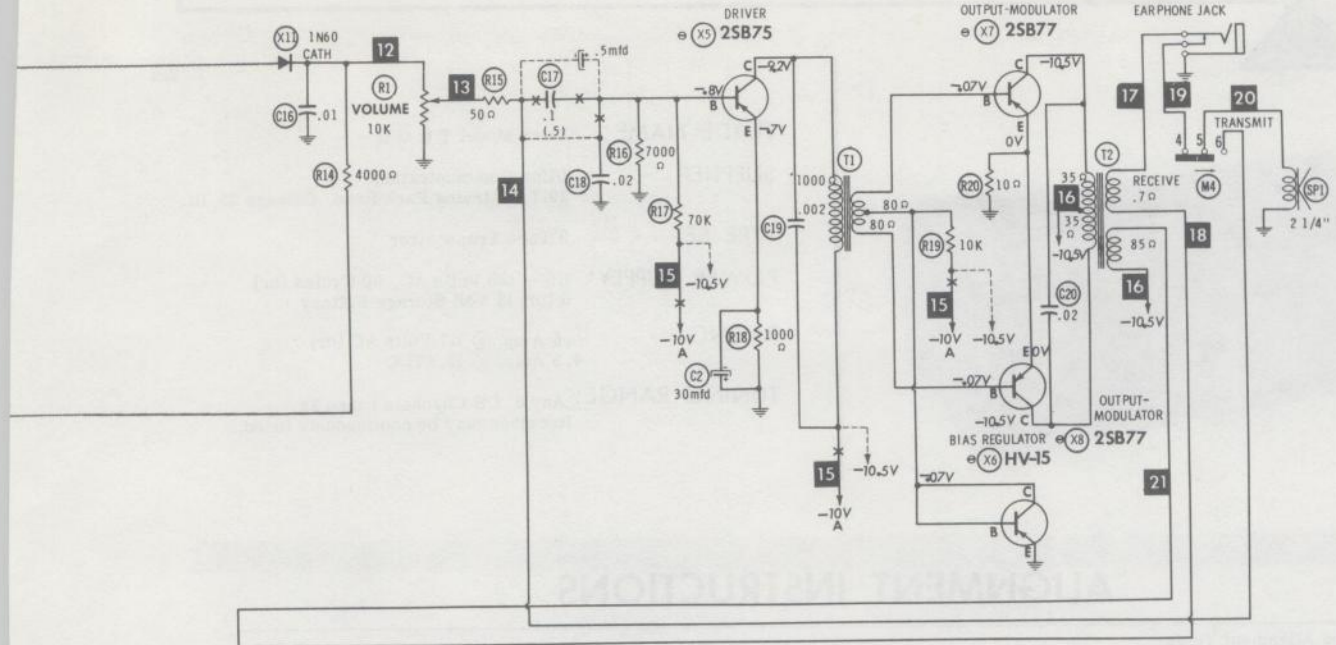

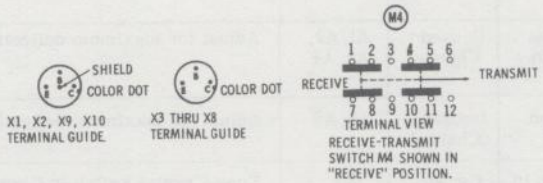

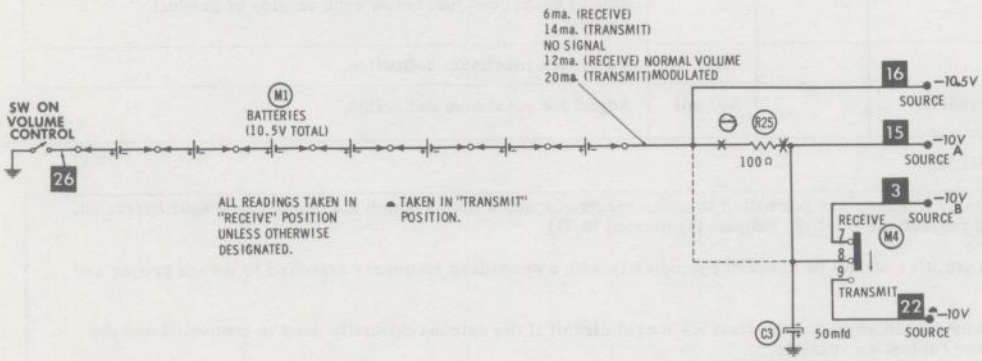

TRIUMPH
MODELS TC-900, TC-900A

TRADE NAME: Utica Model T & C II

SUPPLIER: Utica Communications
2917 W. Irving Park Road, Chicago 25, Ill.

TYPE SET: 9 Tube Transceiver

POWER SUPPLY: 110 – 120 Volts AC, 60 Cycles (or)
6 (or) 12 Volt Storage Battery

RATING: .5 Amp. @ 117 Volts AC (or)
4.5 Amp. @ 12.6VDC

TUNING RANGE: Any 6 CB Channels 1 thru 23
Receiver may be continuously tuned.

ALIGNMENT INSTRUCTIONS

Suggested Alignment Tools:
A1 thru A6, A10, A11.....GENERAL CEMENT #8282, 8606, 8606-L....WALSCO #2526, 2543, 2544
A7, A8, A12.....GENERAL CEMENT #8271, 8722.....WALSCO #2519
A13.....GENERAL CEMENT #2588.....WALSCO #2588

RECEIVER ALIGNMENT

Connect DC probe of VTVM to point ⟨A⟩, common to chassis.

SIGNAL GENERATOR	CHANNEL	ADJUST	REMARKS
High side to pin 7 of V3, common to chassis. (Tune to 266KC, 400~ Mod.)	Unused Channel	A1, A2, A3, A4	Adjust for maximum deflection.
High side to pin 2 of V2, common to chassis (Tune to 1680KC).	Unused Channel	A5, A6	Adjust for maximum deflection.
High side to pin 1 of V1, common to chassis. (Tune to channel frequency).	Center Channel Used.	A7	Tune-Crystal switch in Crystal position. Adjust for maximum deflection. Note rate of dropoff on either side of peak. Set just below peak on side of gradual dropoff.
"	"	A8	Tune-Crystal switch to tune position. Adjust for maximum deflection. Note rate of dropoff on either side of peak. Set just below peak on side of gradual dropoff.
"	"	A9	Adjust for maximum deflection.
High side to antenna receptacle, low side to chassis.	"	A10, A11	Adjust for maximum deflection.

TRANSMITTER ALIGNMENT

Only those persons properly licensed are permitted to make repairs or adjustments which may result in illegal operation. (Refer to FCC rules and regulations Part 19, Subpart D, Section 19.71).

The frequency of the transmitter should be checked periodically with a secondary frequency standard to insure proper and legal operation.

Best results will be obtained when adjusting the final RF output circuit if the antenna normally used is connected and the chassis is as nearly in the cabinet as possible.

		ADJUST	REMARKS
Connect antenna or dummy load.	RF Wattmeter or Signal Strength Meter.	A12	Key transmitter. Adjust for maximum output. Key transmitter several times to be certain that oscillator starts each time.
"	"	A13	Adjust for maximum output.

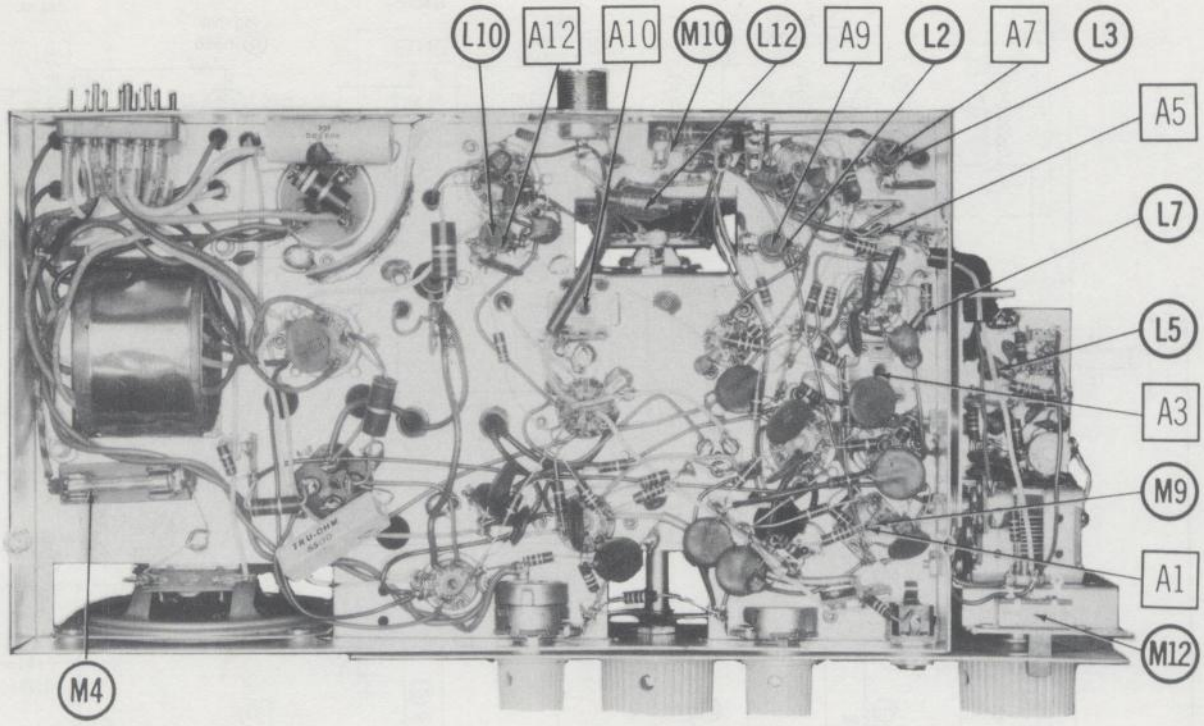
L10
A12
A10
M10
L12
A9
L2
A7
L3
A5
L7
L5
A3
M9
A1
M12
M4

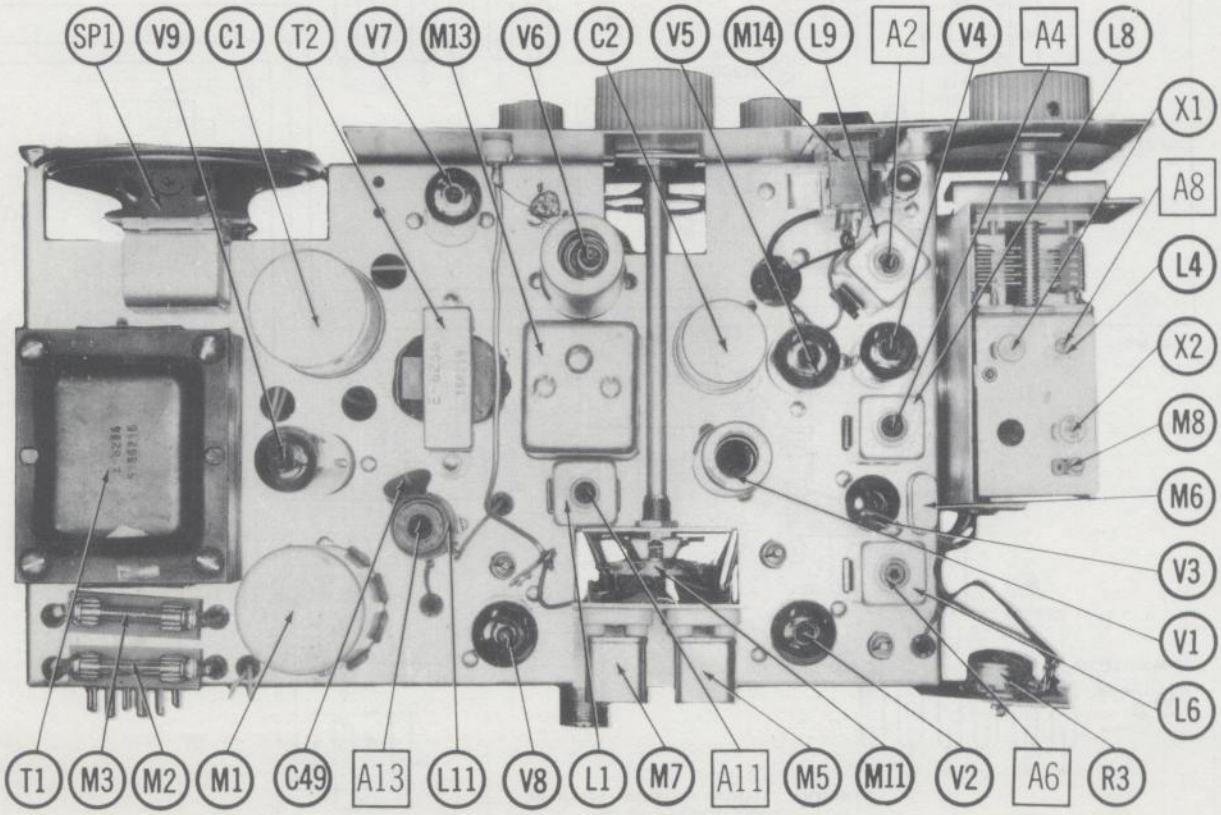
SP1
V9
C1
T2
V7
M13
V6
C2
V5
M14
L9
A2
V4
A4
L8
X1
A8
L4
X2
M8
M6
V3
V1
L6
T1
M3
M2
M1
C49
A13
L11
V8
L1
M7
A11
M5
M11
V2
A6
R3

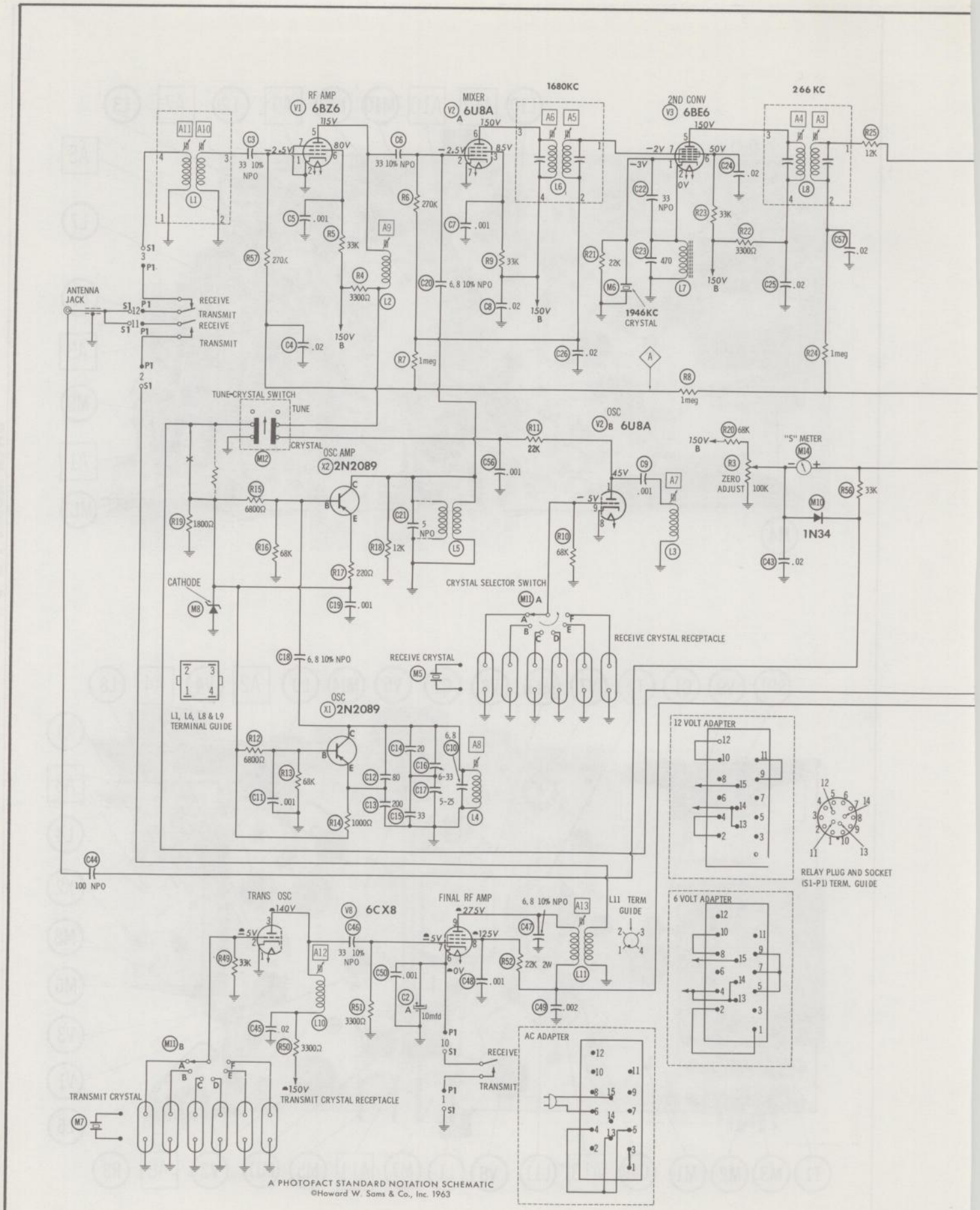

A PHOTOFACT STANDARD NOTATION SCHEMATIC

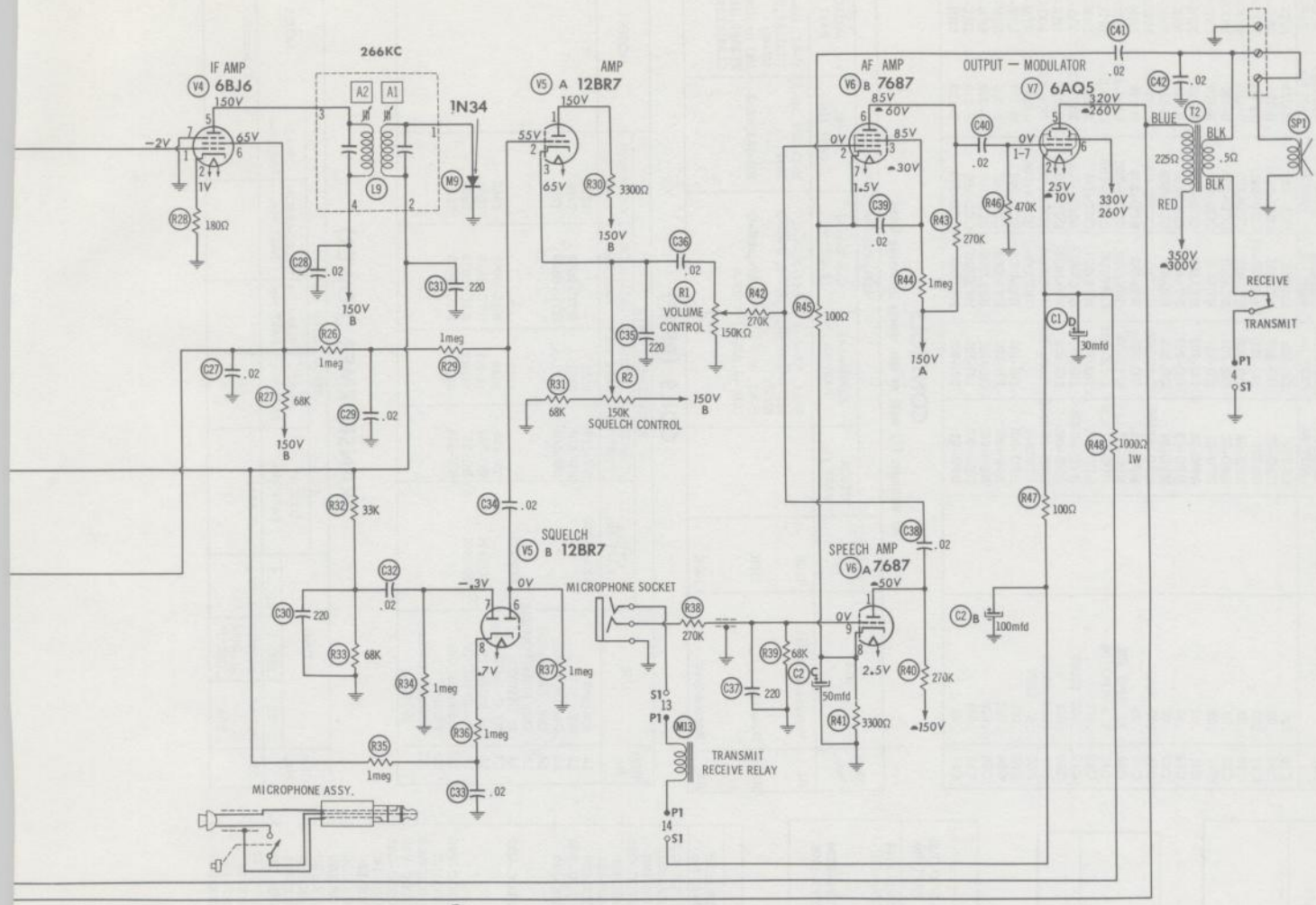

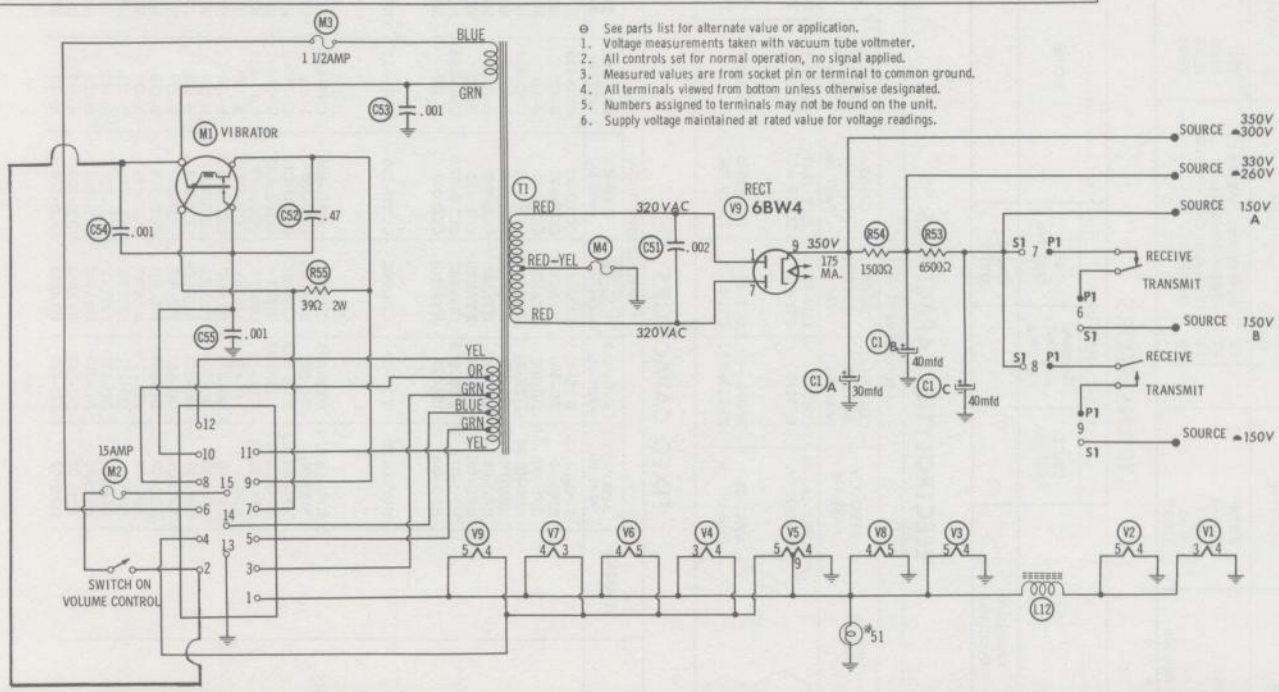

⊖ See parts list for alternate value or application.
1. Voltage measurements taken with vacuum tube voltmeter.
2. All controls set for normal operation, no signal applied.
3. Measured values are from socket pin or terminal to common ground.
4. All terminals viewed from bottom unless otherwise designated.
5. Numbers assigned to terminals may not be found on the unit.
6. Supply voltage maintained at rated value for voltage readings.

UTICA MODEL T & C II

PARTS LIST AND DESCRIPTION

TUBES

◆ AMPEREX ◆ GENERAL ELECTRIC ◆ RCA ◆ RAYTHEON ◆ SYLVANIA ◆

ITEM No.	USE	TYPE	ITEM No.	USE	TYPE
V1	RF Amplifier	6BZ6	V6	Speech Amp. -AF Amp.	7687
V2	Mixer-Oscillator	6U8-A	V7	Output-Modulator	6AQ5
V3	2nd Converter	6BE6	V8	Transmit Osc. -Final RF	6CX8
V4	IF Amplifier	6BJ6	V9	Rectifier	6BW4
V5	Noise Limiter-Squelch	12BR7			

TRANSISTORS

ITEM No.	ORIG. TYPE	USE	REPLACEMENT DATA			NOTES
			DELCO PART No.	GENERAL ELECTRIC PART No.	RCA PART No.	
X1	2N2089	Oscillator			2N1178	
X2	2N2089	Oscillator Amp.			2N1178	

ELECTROLYTIC CAPACITORS

ITEM No.	RATING		REPLACEMENT DATA						
	CAP.	VOLT.	UTICA PART No.	AEROVOX PART No.	CORNELL-DUBILIER PART No.	GENERAL ELECTRIC PART No.	GENERAL INSTRUMENT PART No.	MALLORY PART No.	SPRAGUE PART No.
C1A	▲30	450		AFH3-140-50	C0870	XC3-39	TMT-3367	FP367.5	TVL-3744
B	■40	350		PRS1670	BR3045	QT1-12	TD-30-450	TC67	TVA-1711
C	▲40	350							
D	30	25							
C2A	10	100		AFH2-05	B0070	XC2-32	TMD-2035	WP339.5A	TVL-2224
B	100	25		PRS1410	BBR10-150	QT1-5	TD-10-150		TVA-1406
C	50	6							

FIXED CAPACITORS

ITEM No.	RATING	REMARKS	REPLACEMENT DATA					
			AEROVOX PART No.	CENTRALAB PART No.	CORNELL-DUBILIER PART No.	ELMENCO PART No.	MALLORY PART No.	SPRAGUE PART No.
C3	33 10% NPO		NPO-DI 33	DTZ-33	C10Q33C	CCTO-33	CNO-433	10TCC-Q33
C4	.02		BPD-02	DD-203	BYA6S2	CCD-203	B-120	5HK-S20
C5	.001		BPD-001	DD-102	BYA10D1	CCD-102	B-110	5HK-D10
C6	33 10% NPO		NPO-DI 33	DTZ-33	C10Q33C	CCTO-33	CNO-433	10TCC-Q33
C7	.001		BPD-001	DD-102	BYA10D1	CCD-102	B-210	5HK-D10
C8	.02		BPD-02	DD-203	BYA6S2	CCD-203	B-120	5HK-S20
C9	.001		BPD-001	DD-102	BYA10D1	CCD-102	B-210	5HK-D10
C10	6.8		NPO-DI 6.8	DTZ-6R8	C10V68C	CCTO-6R8	CNO-568	10TCC-V68
C11	.001		BPD-001	DD-102	BYA10D1	CCD-102	B-210	5HK-D10
C12	80 N150							
C13	200 N150							
C14	20 NPO		NPO-DI 20	TCZ-20	C10Q20C	CCTO-200	CNO-427	10TCC-Q27
C15	133 NPO							
C16	5-25							
C17	6-33							
C18	6.8 NPO 10%		NPO-DI 6.8	DTZ-6R8	C10V68C	CCTO-6R8	CNO-568	10TCC-V68
C19	.001		BPD-001	DD-102	BYA10D1	CCD-102	B-210	5HK-D10
C20	6.8		NPO-DI 6.8	DTZ-6R8	C10V68C	CCTO-6R8	CNO-568	10TCC-V68
C21	5 NPO		NPO-DI 4.7	DTZ-4R7	C10V47C	CCTO-4R7	CNO-547	10TCC-V47
C22	33 NPO 10%		NPO-DI 33	DTZ-33	C10Q33C	CCTO-33	CNO-433	10TCC-Q33
C23	470		DI-470	DD-471	L10T47	CCD-471	B-347	10TS-T47
C24	.02		BPD-02	DD-203	BYA6S2	CCD-203	B-120	5HK-S20
C25	.02		BPD-02	DD-203	BYA6S2	CCD-203	B-120	5HK-S20
C26	.02		BPD-02	DD-203	BYA6S2	CCD-203	B-120	5HK-S20
C27	.02		BPD-02	DD-203	BYA6S2	CCD-203	B-120	5HK-S20
C28	.02		BPD-02	DD-203	BYA6S2	CCD-203	B-120	5HK-S20
C29	.02		BPD-02	DD-203	BYA6S2	CCD-203	B-120	5HK-S20
C30	220		DI-220	DD-221	L10T22	CCD-221	B-322	10TS-T22
C31	220		DI-220	DD-221	L10T22	CCD-221	B-322	10TS-T22
C32	.02		BPD-02	DD-203	BYA6S2	CCD-203	B-120	5HK-S20
C33	.02		BPD-02	DD-203	BYA6S2	CCD-203	B-120	5HK-S20
C34	.02		BPD-02	DD-203	BYA6S2	CCD-203	B-120	5HK-S20

FIXED CAPACITORS (cont)

ITEM No.	RATING	REMARKS	REPLACEMENT DATA					
			AEROVOX PART No.	CENTRALAB PART No.	CORNELL-DUBILIER PART No.	ELMENCO PART No.	MALLORY PART No.	SPRAGUE PART No.
C35	220		DI-220	DD-221	L10T22	CCD-221	B-322	10TS-T22
C36	.02		BPD-02	DD-203	BYA6S2	CCD-203	B-120	5HK-S20
C37	220		DI-220	DD-221	LA10T22-S3	CCD-221	GP322	10TS-T22
C38	.02		BPD-02	DD-203	BYA6S2	CCD-203	B-120	5HK-S20
C39	.02		BPD-02	DD-203	BYA6S2	CCD-203	B-120	5HK-S20
C40	.02		BPD-02	DD-203	BYA6S2	CCD-203	B-120	5HK-S20
C41	.02		BPD-02	DD-203	BYA6S2	CCD-203	B-120	5HK-S20
C42	.02		BPD-02	DD-203	BYA6S2	CCD-203	B-120	5HK-S20
C43	.02		BPD-02	DD-203	BYA6S2	CCD-203	B-120	5HK-S20
C44	100 NPO		NPO-DI 100	DTZ-100	C10T1C	CCTO-101	CNO-310	10TCC-T10
C45	.02		BPD-02	DD-203	BYA6S2	CCD-203	B-120	5HK-S20
C46	33 NPO 10%		NPO-DI 33	DTZ-33	C10Q33C	CCTO-330	CNO-433	10TCC-Q33
C47	6.8 NPO 10%		NPO-DI 6.8	DTZ-6R8	C10V68C	CCTO-6R8	CNO-568	10TCC-V68
C48	.001		BPD-001	DD-102	BYA10D1	CCD-102	B-210	5HK-D10
C49	.002 3000V		HVD-30-2200	DD30-202	HVC30D2	3CCD-202	3HV-222	30GA-D20
C50	.001		BPD-001	DD-102	BYA10D1	CCD-102	B-210	5HK-D10
C51	.002 3000V		HVD-30-2200	DD30-202	HVC30D2	3CCD-202	3HV-222	30GA-D20
C52	.47 200V		P288N-5		CUB2P5	1DP-4-504	GEM-205	2TM-P50
C53	.001		BPD-001	DD-102	BYA10D1	CCD-102	B-210	5HK-D10
C54	.001		BPD-001	DD-102	BYA10D1	CCD-102	B-210	5HK-D10
C55	.001		BPD-001	DD-102	BYA10D1	CCD-102	B-210	5HK-D10
C56	.001		BPD-001	DD-102	BYA10D1	CCD-102	B-210	5HK-D10
C57	.02		BPD-02	DD-203	BYA6S2	CCD-203	B-120	5HK-S20

CONTROLS

All wattages 1/2 watt, or less, unless otherwise listed.

ITEM No.	USE	RESIST-ANCE	REPLACEMENT DATA				
			UTICA PART No.	CENTRALAB PART No.	CLAROSTAT PART No.	CTS-IRC PART No.	MALLORY PART No.
R1	Volume & Switch	150K		B-44, KR-1 or (AB-44, AK-11, KR-1)	A47-150K-S/ RS-2, SWE-2	B-13-328, SK-3, 76-1	U-42, US-26 or (UA154A, SK750, US-41)
R2	Squelch	150K		B-43, or (AB-43, AK-11)	A-47-150K-S/ RS-2	B11-328, SK-3	U43 or (UA154L, SL2500, RU154L, SL38, SL2500)
R3	Zero Adjust	100K					

COILS (RF-IF)

ITEM No.	USE	REPLACEMENT DATA					NOTES
		UTICA PART No.	MERIT PART No.	MILLER PART No.	STANCOR PART No.	WORKMAN PART No.	
L1	Antenna	AK-40-310	TV-140	6252		T234	
L2	RF		SW-608	6171-A	RTC-8609	T216	
L3	Osc. (Crystal)		SW-608	6171-A	RTC-8609	T216	
L4	Osc. (Tuneable)						
L5	Osc. Plate(Tuneable)						
L6	IF (1680KC)	EO11492		1732			
L7	RF Choke (50uh)		TV-193	4629	RTC-8668	T962	
L8	1st 266KC IF	EO11491	BC-350	14-H1	RTC-8638	T604	
L9	2nd 266KC IF	EO11491	BC-351	14-H2	RTC-8639	T605	
L10	Transmit Osc.		SW-608	6171-A	RTC-8609	T216	
L11	Final						
L12	Filament Choke (50uh)						

TRANSFORMER (POWER)

ITEM No.	RATING			REPLACEMENT DATA					NOTES
	PRI.	SEC. 1	SEC. 2	UTICA PART No.	MERIT PART No.	STANCOR PART No.	THORDARSON PART No.	TRIAD PART No.	
T1	117VAC @ .5A (.68A)*	640VCT @ .046A (.090A)*	6.3V @ 4A	E-6234					* Transmit

PARTS LIST AND DESCRIPTION (CONTINUED)

TRANSFORMER (AUDIO OUTPUT)

ITEM No.	IMPEDANCE		REPLACEMENT DATA					NOTES
	PRI.	SEC.	UTICA PART No.	MERIT PART No.	STANCOR PART No.	THORDARSON PART No.	TRIAD PART No.	
T2	7300Ω	3-4Ω	E-6256					

SPEAKER

ITEM No.	TYPE	REPLACEMENT DATA		NOTES
		UTICA PART No.	QUAM PART No.	
SP1	3 1/2" PM 3-4Ω	S-5325	3A07	

VIBRATOR

ITEM No.	TYPE	INPUT VOLTS	FRE-QUENCY	REPLACEMENT DATA			NOTES
				UTICA PART No.	CORNELL-DUBILIER PART No.	MALLORY PART No.	
M1	Interrupter	6.3	115~	1610	5372	1610	

FUSES

ITEM No.	TYPE	RATING	REPLACEMENT DATA					
			UTICA PART No.		LITTELFUSE PART No.		BUSS PART No.	
			FUSE	HOLDER	FUSE	HOLDER	FUSE	HOLDER
M2	3AG	15A 32V			311015 (3AG 15A 32V)	357002	AGC15	3823-2
M3	3AG	1 1/2A 125V			31301.5 (3AG 1½A 125V)	357002	AGC 1½	3823-2
M4	3AG	.175A 250V			312.175 (3AG .175A 250V)	357001	AGC 175/1000	4405

MISCELLANEOUS

ITEM No.	PART NAME	UTICA PART No.	NOTES
M5	Crystal	RS-6	Receive (Order by frequency & channel desired)
M6	Crystal		1946KC
M7	Crystal		Transmit (Order by frequency & channel desired)
M8	Diode		Oscillator Amp. Overload
M9	Diode		Detector (1N34)
M10	Diode		Meter Rectifier (1N34)
M11	Switch		Crystal Selector (Rotary Wafer Type)
M12	Switch		Tune-Crystal (DPDT Slide Type)
M13	Relay		Transmit-Receive (Plug-in type, DC Coil Resistance 125Ω)
M14	"S" Meter		

WIRING DATA

General-use Hook-up Wire .... Use BELDEN No. 8530 (Solid) Available in 12 Colors
8524 (Stranded) Available in 12 Colors
Shielded Antenna Lead ..... Use BELDEN No. 8214 Lowest Loss (RG-8/U Type)
8237 Low Loss (RG-8/U)
8240 (Solid) Miniature (RG-58/U)
8259 (Stranded) Miniature (RG-58A/U)
Coiled Microphone Cable ..... Use BELDEN No. 8497 3 Conductor- 1 Shielded for Press-to-Talk (Neoprene)
8496 3 Conductor- 1 Shielded for Press-to-Talk (Vinyl)
Ignition Noise Suppression .... Use BELDEN No. 7300-Series Spark-Plug Sets
Bonding Strap ..... Use BELDEN No. 8661 (3/8 In.)

RESISTANCE MEASUREMENTS

ITEM	TUBE	Pin 1	Pin 2	Pin 3	Pin 4	Pin 5	Pin 6	Pin 7	Pin 8	Pin 9
V1	6BZ6	1.5meg	0Ω	FIL	FIL	†11.3K	†41K	0Ω		
V2	6U8-A	†33K	2.5meg	†41K	FIL	FIL	†8000Ω	0Ω	0Ω	68K
V3	6BE6	22K	.1Ω	FIL	FIL	†11.3K	†41K	2.2meg		
V4	6BJ6	1.2meg	180Ω	FIL	FIL	†8000Ω	†74K	0Ω		
V5	12BR7	†11.3K	†2meg	100K	FIL	FIL	1meg	1meg	2.1meg	FIL
V6	7687	†▲280K	270K	†1meg	FIL	FIL	†270K	3400Ω	3300Ω	68K ▲330K
V7	6AQ5	470K	2800Ω	FIL	FIL	†225Ω	† 1500Ω	470K		
V8	6CX8	0Ω	33K	†▲11.3K	FIL	FIL	▲0Ω	3300Ω	†22K	†225Ω
V9	6BW4	355Ω	NC	NC	FIL	FIL	NC	335Ω	NC	200K

ITEM	TYPE	BASE	EMITTER	COLLECTOR
X1	2N2089	10K	2000Ω	.1Ω
X2	2N2089	10K	2000Ω	3.5Ω

ALL MEASUREMENTS TAKEN IN "RECEIVE" POSITION UNLESS NOTED. WITH TUNE-CRYSTAL SWITCH IN CRYSTAL POSITION.
† MEASURED FROM PIN 9, V9.
▲ MEASURED IN "TRANSMIT" POSITION.
NC NO CONNECTION

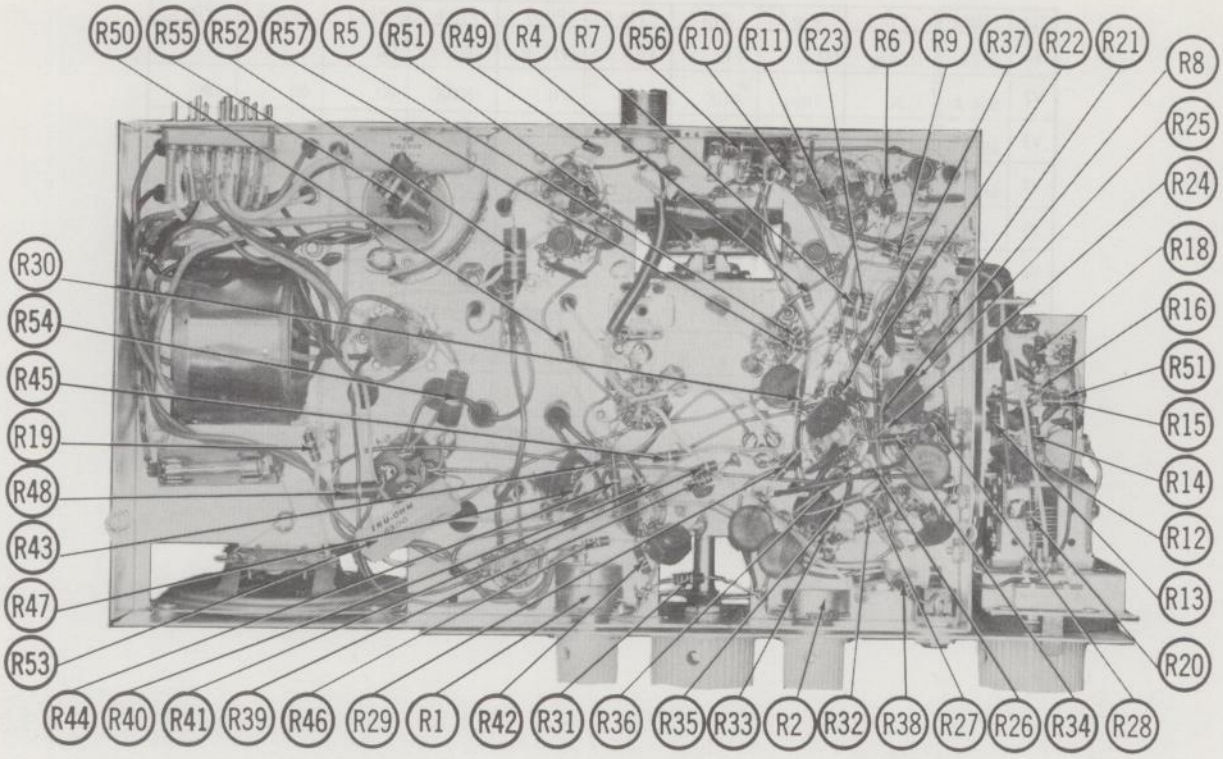
R50
R55
R52
R57
R5
R51
R49
R4
R7
R56
R10
R11
R23
R6
R9
R37
R22
R21
R8
R25
R24
R18
R16
R51
R15
R14
R12
R13
R20
R30
R54
R45
R19
R48
R43
R47
R53
R44
R40
R41
R39
R46
R29
R1
R42
R31
R36
R35
R33
R2
R32
R38
R27
R26
R34
R28

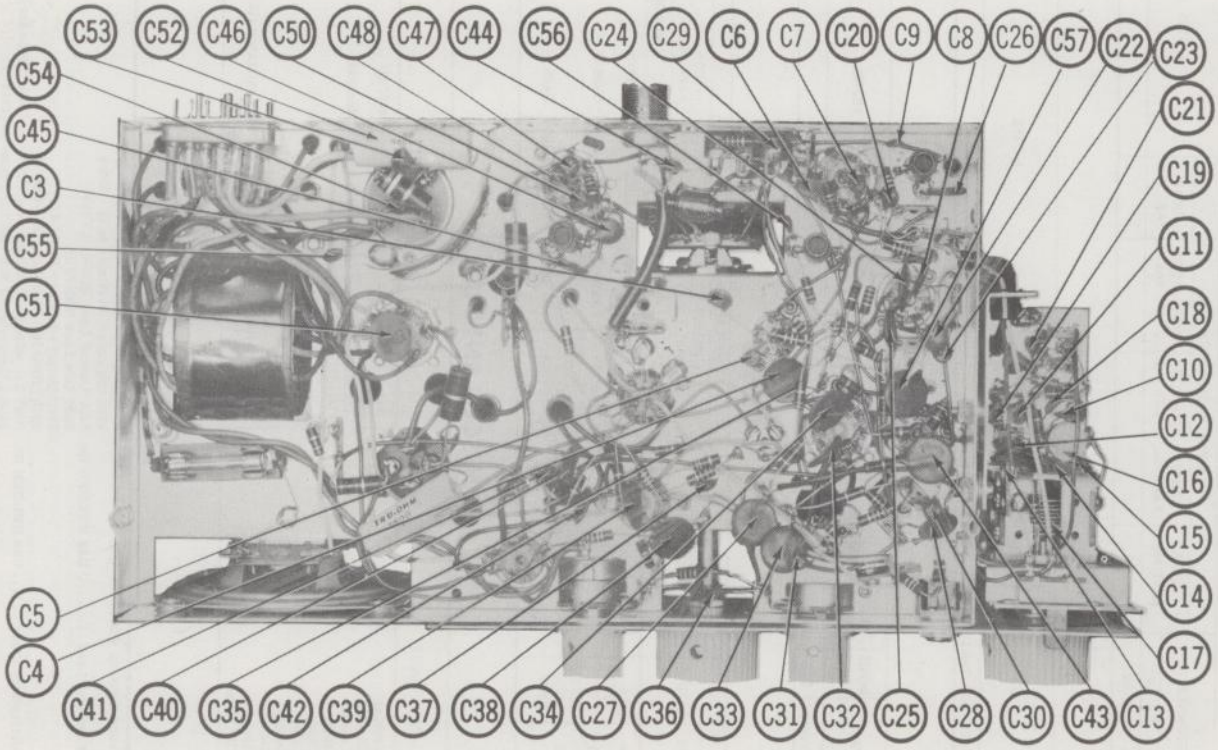
C53
C52
C46
C50
C48
C47
C44
C56
C24
C29
C6
C7
C20
C9
C8
C26
C57
C22
C23
C21
C19
C11
C18
C10
C12
C16
C15
C14
C17
C13
C54
C45
C3
C55
C51
C5
C4
C41
C40
C35
C42
C39
C37
C38
C34
C27
C36
C33
C31
C32
C25
C28
C30
C43

TRADE NAME: Cadre Model 510

SUPPLIER: Cadre Industries Corp.
Endicott, N. Y.

TYPE SET: 18 Transistor Transceiver

POWER SUPPLY: 110 — 120 Volts AC, 60 Cycles
(or) 12 Volt Storage Battery

RATING: 5 Watts, .19 Amp. @117 VAC
.8 Amp. @12.6VDC

TUNING RANGE: Any 5 CB Channels 1 thru 22
Receiver may be continuously tuned.

ALIGNMENT INSTRUCTIONS

Suggested Alignment Tools:

A1 thru A4.....GENERAL CEMENT #5009, 8195, 8274.....WALSCO #2515, 2516, 2532
A5, A7 thru A10, A15, A16.....GENERAL CEMENT #5000, 5003, 5066.....WALSCO #2515, 2516, 2518
A6, A11, A12, A14.....GENERAL CEMENT #8282, 8606, 8606-L....WALSCO #2526, 2541, 2542

RECEIVER ALIGNMENT

Connect output meter across voice coil except for step 3.

	SIGNAL GENERATOR	CHANNEL	ADJUST	REMARKS
1.	High side thru .05mfd to base of X4, low side to common. (Tune to 455K, 400~ Mod.)	Any	A1, A2, A3	Adjust for maximum.
2.	High side thru .05mfd to base of X2, low side to common. (Tune to 1.68MC, 400~ Mod.)	Any	A4	Adjust for maximum.
3.	Not Used	Center Channel	A5	Connect DC probe of VTVM to emitter of X2, low side to common. Adjust for maximum.
4.	High side to antenna terminal, low side to common. (Tune to channel frequency.)	Channel Desired	A6, A7	Adjust for maximum.
5.	"	Center Channel Used.	A8	Crystal-Tune switch to tune position. Adjust for maximum.

TRANSMITTER ALIGNMENT

Only those persons properly licensed are permitted to make repairs or adjustments which may result in illegal operation. (Refer to FCC rules and regulations Part 19, Subpart D, Section 19.71).

The frequency of the transmitter should be checked periodically with a secondary frequency standard to insure proper and legal operation.

Best results will be obtained when adjusting the final RF output circuit if the antenna normally used is connected and the chassis is as nearly in the cabinet as possible.

		ADJUST	REMARKS
Connect dummy load or antenna. Remove shorting wire from terminal 2 and 5 of power plug. Connect 0-500MA meter between these two pins.		A9, A10, A11	Key transmitter. Adjust for maximum output (current reading must not exceed 380MA). Replace shorting wire.
Connect Antenna.		A12	MINIMUM interference on lower TV channels.

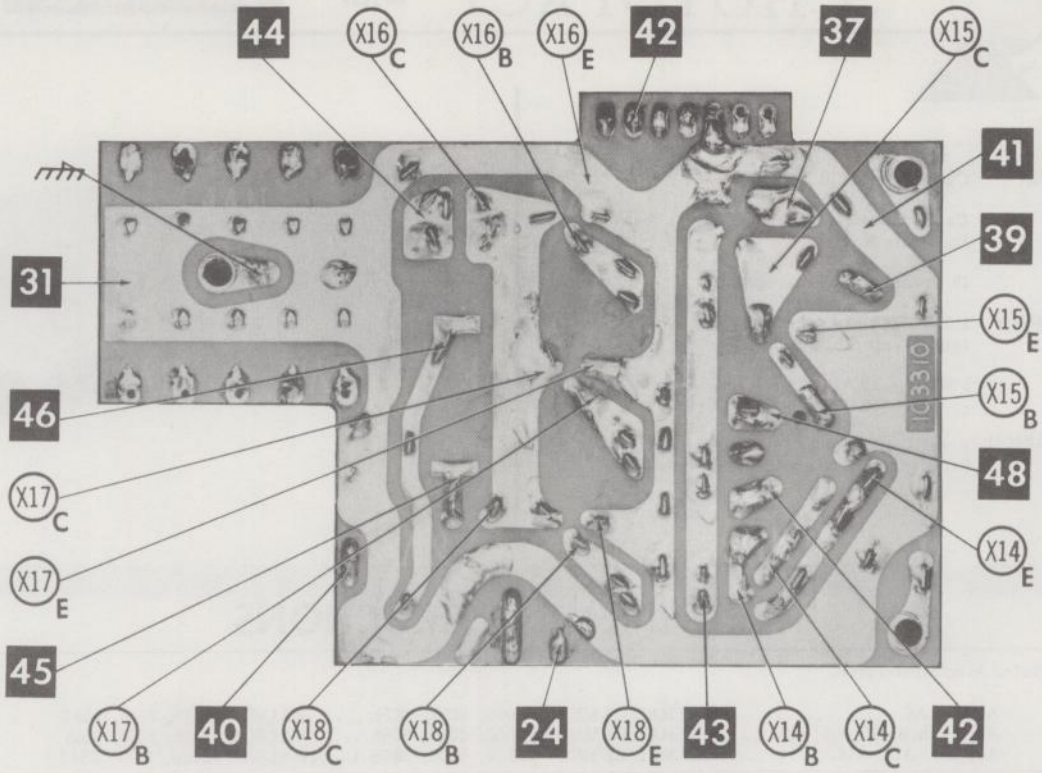

A Howard W. Sams CIRCUITRACE™ Photo **TRANSMITTER PRINTED BOARD**

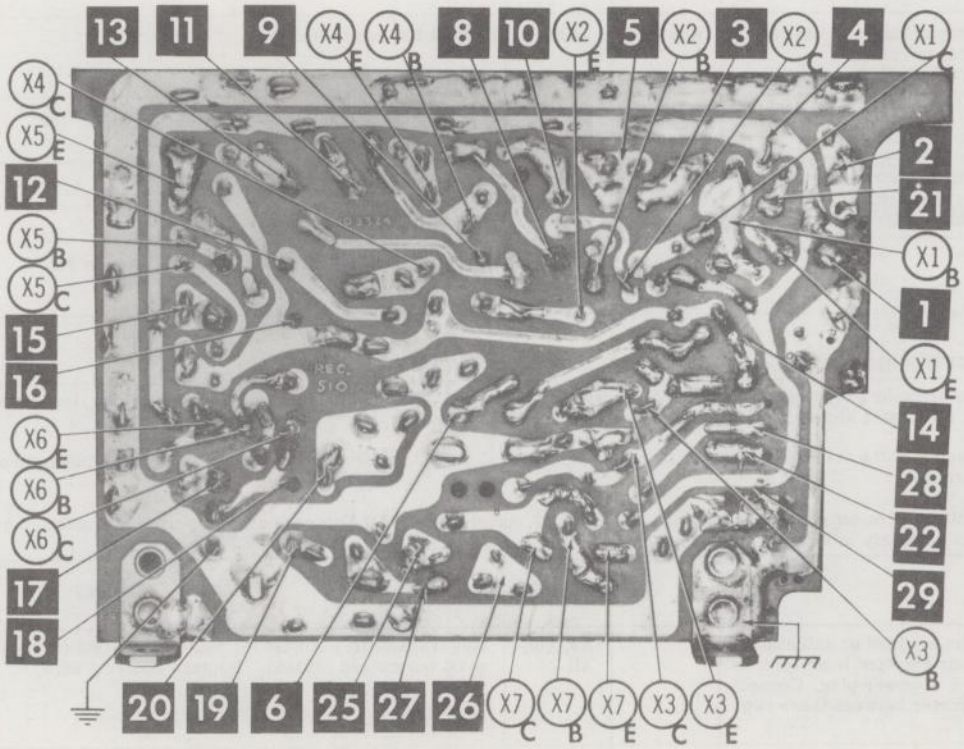

A Howard W. Sams CIRCUITRACE™ Photo **RECEIVER PRINTED BOARD**

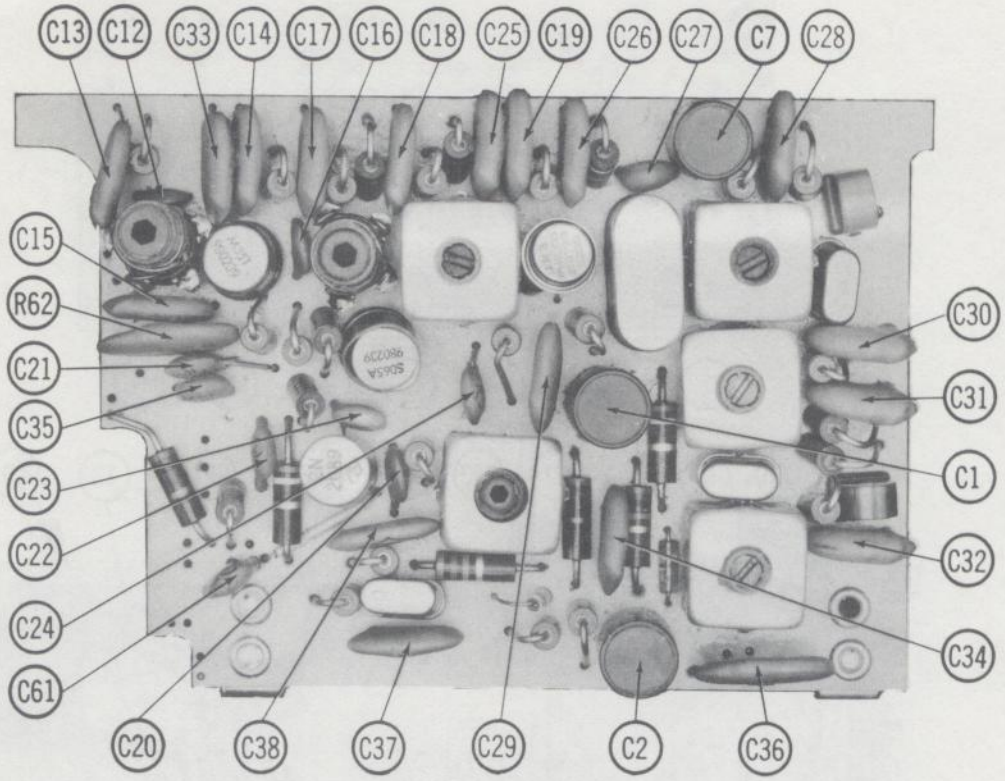

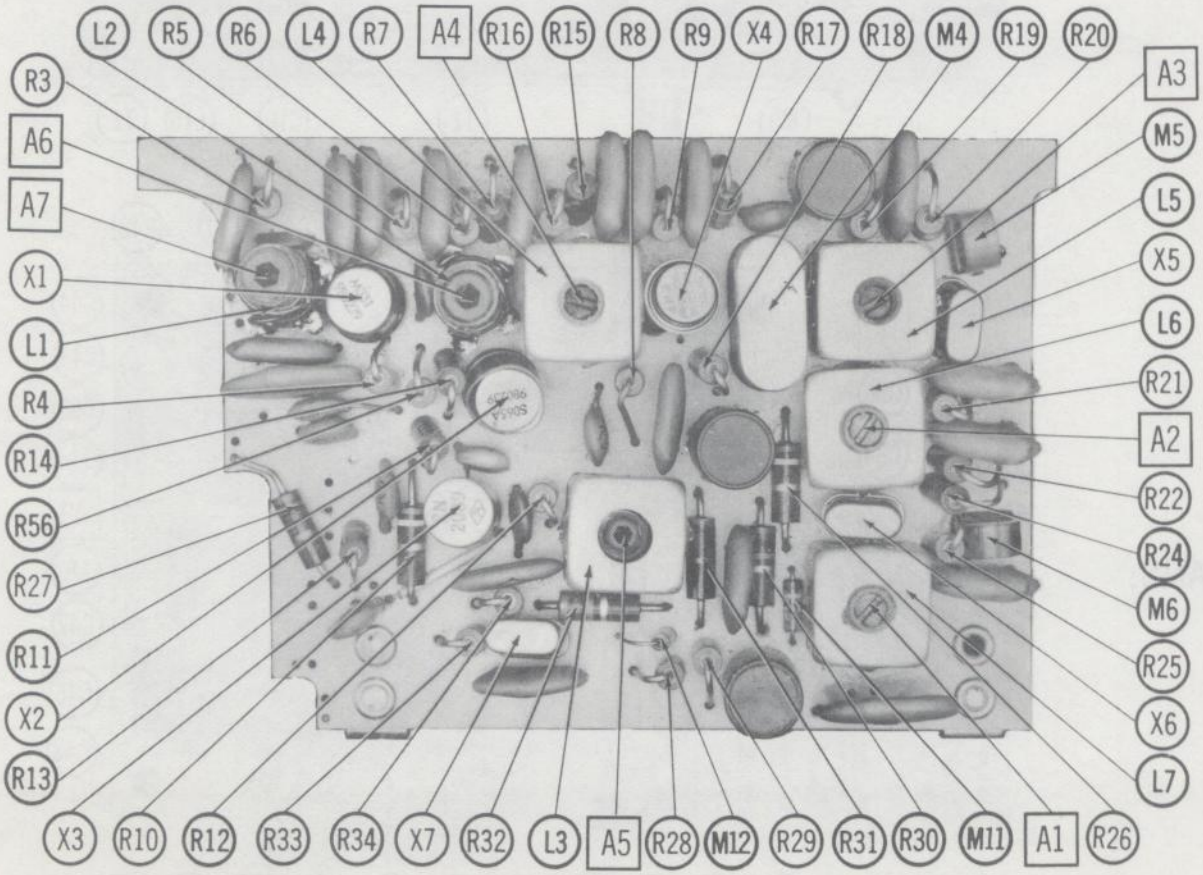

RECEIVER PRINTED BOARD

POWER

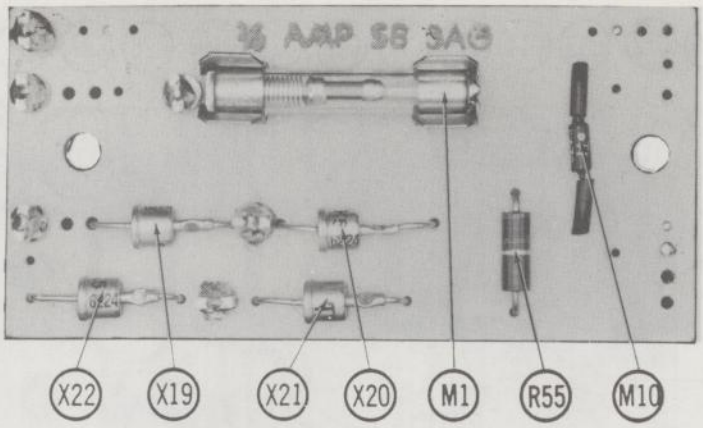

TOP VIEW

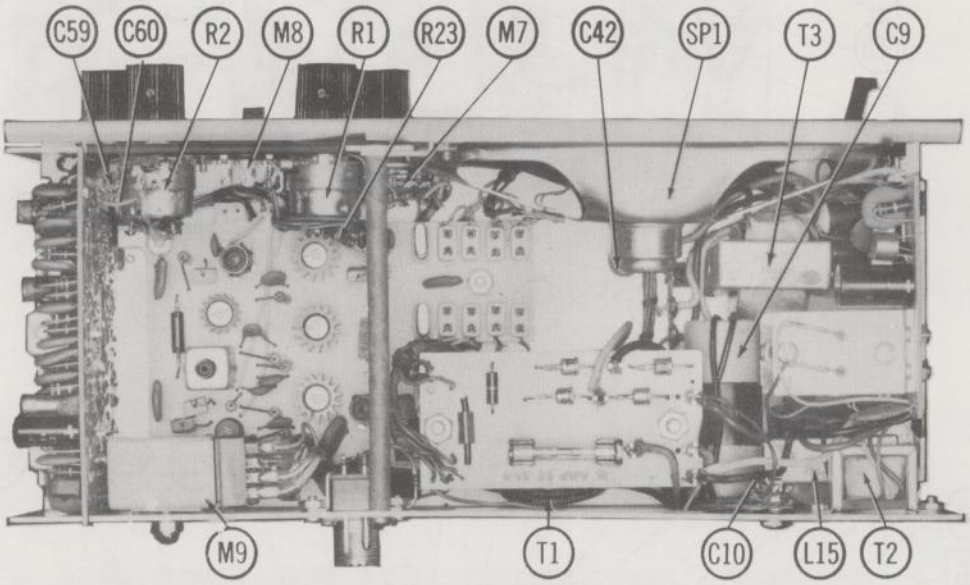

TRANS.

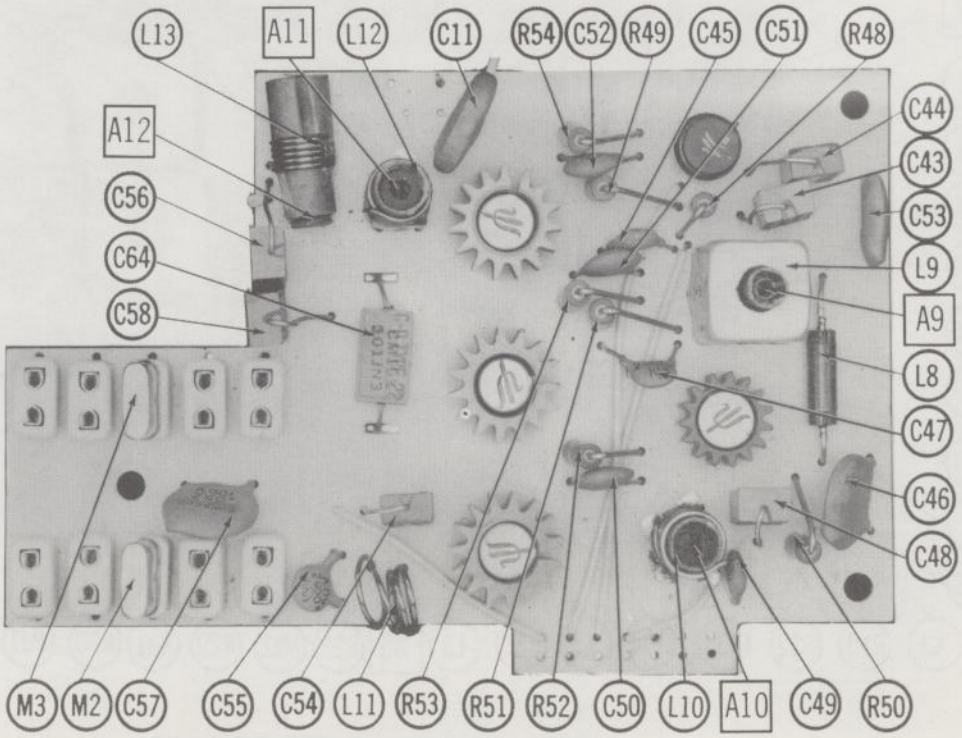

PARTS LIST AND DESCRIPTION

TRANSISTORS

ITEM No.	ORIG. TYPE	USE	REPLACEMENT DATA			NOTES
			DELCO PART No.	GENERAL ELECTRIC PART No.	RCA PART No.	
X1	M351	RF Amp.				PNP
X2	S065A	Mixer				PNP
X3	2N2089	Receiver Oscillator				PNP
X4	2N1789	2nd Converter				PNP
X5	R539	1st IF Amp.				PNP
X6	R539	2nd IF Amp.				PNP
X7	M108	1st AF Amp.			2N406	PNP
X8	2N1274	1st Squelch Amp.			2N591	PNP
X9	2N1274	2nd Squelch Amp.			2N591	PNP
X10	2N1274	2nd AF Amp. -Speech Amp.			2N591	PNP
X11	2N1274	Driver			2N591	PNP
X12	2N250	Output-Modulator			2N301	PNP
X13	2N250	Output-Modulator			2N301	PNP
X14	PT856	Transmit Oscillator				PNP
X15	PT856	Transmit Driver				PNP
X16	PT857	Final Amplifier				PNP
X17	PT857	Final Amplifier				PNP
X18	PT857	Final Amplifier				PNP

POWER RECTIFIERS

ITEM No.	MEASURED CURRENT	CADRE PART No.	RECTIFIERS		
			MALLORY PART No.	RCA PART No.	SARKES TARZIAN PART No.
X19	.500A	103318		1N3193	10H
X20	.500A	103318		1N3193	10H
X21	.500A	103318		1N3193	10H
X22	.500A	103318		1N3193	10H

ELECTROLYTIC CAPACITORS

ITEM No.	RATING		REPLACEMENT DATA						
	CAP.	VOLT.	CADRE PART No.	AEROVOX PART No.	CORNELL-DUBILIER PART No.	GENERAL ELECTRIC PART No.	GENERAL INSTRUMENT PART No.	MALLORY PART No.	SPRAGUE PART No.
C1	15	15	101013	BCD15015	ECPB409	MT1-10	MLV15-15	TT15X15	VL-1168
C2	5	12	101115	BCD12005	ECPB405	MT1-3	MLV5-12	TT12X5	VL-1124
C3	100	12	100656	BCD12100	ECPB417	MT1-19	MLV100-12	TT12X100	VL-1140
C4	100	3	100689	BCD3100	ECPB417	MT1-22	MLV100-3	PET1400	VL-1051
C5	5	15	101431	BCD15005	ECPB405	MT1-3	MLV5-15	PE1535	VL-1164
C6	50	6	101113	BCD6050	ECPB115	MT1-15	MLV50-6	TT6X50	VL-1094
C7	15	15	101013	BCD15015	ECPB409	MT1-10	MLV15-15	TT15X15	VL-1168
C8	100	12	100656	BCD12100	ECPB417	MT1-19	MLV100-12	TT12X100	VL-1140
C9	1000	15	101404	PRS1230	BR100015	QT1-32	TD-1000-15	TC1501	TVA-1163
C10	1000	15	101404	PRS1230	BR100015	QT1-32	TD-1000-15	TC1501	TVA-1163

FIXED CAPACITORS

ITEM No.	RATING	REMARKS	REPLACEMENT DATA					
			AEROVOX PART No.	CENTRALAB PART No.	CORNELL-DUBILIER PART No.	ELMENCO PART No.	MALLORY PART No.	SPRAGUE PART No.
C11	.001		DI 1000	DM-102	H-05D1	CCD-102	GP210	5GA-D1
C12	33		DI 33	DD-330	L10Q33	CCD-330	GP433	5GA-Q33
C13	.05		TTD-05	DDA-503	H-05S5			TG-S50
C14	.05		TTD-05	DDA-503	H-05S5			TG-S50
C15	.05		TTD-05	DDA-503	H-05S5			TG-S50
C16	33		DI 33	DD-330	L10Q33	CCD-330	GP433	5GA-Q33
C17	.05		TTD-05	DDA-503	H-05S5			TG-S50
C18	.05		TTD-05	DDA-503	H-05S5			TG-S50
C19	.05		TTD-05	DDA-503	H-05S5			TG-S50
C20	47		DI 47	DD-470	L10Q47	CCD-470	GP447	5GA-Q47
C21	.005		BPD-005	DD-502	BYA10D5	CCD-502	B-250	5HK-D50
C22	.005		BPD-005	DD-502	BYA10D5	CCD-502	B-250	5HK-D50
C23	330							
C24	.005		BPD-005	DD-502	BYA10D5	CCD-502	B-250	5HK-D50
C25	.05		TTD-05	DDA-503	H-05S5			TG-S50
C26	.05		TTD-05	DDA-503	H-05S5			TG-S50

AUDIO BOARD

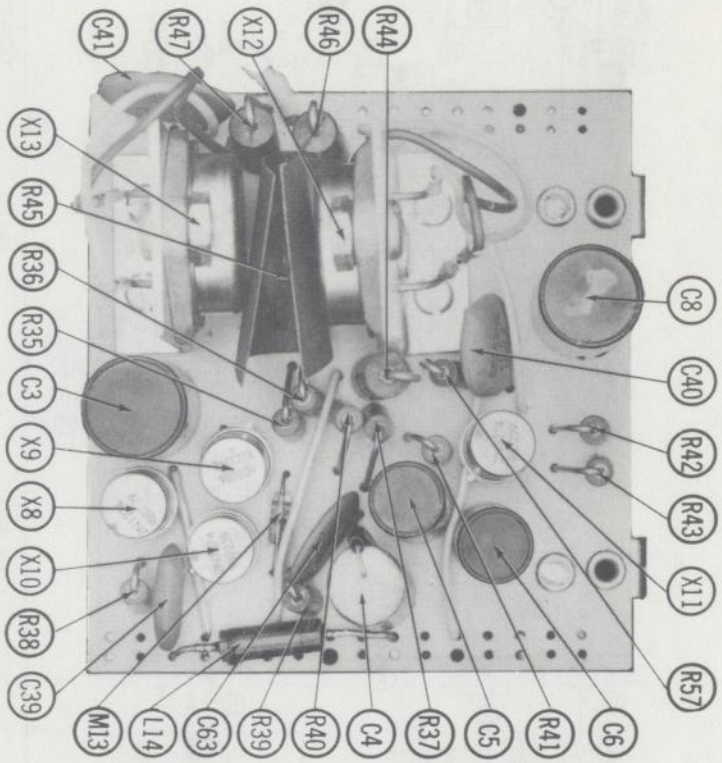

FIXED CAPACITORS (cont)

ITEM No.	RATING	REMARKS	REPLACEMENT DATA					
			AEROVOX PART No.	CENTRALAB PART No.	CORNELL-DUBILIER PART No.	ELMENCO PART No.	MALLORY PART No.	SPRAGUE PART No.
C27	47		DI 47	DD-470	L10Q47	CCD-470	GP447	5GA-Q47
C28	.05		TTD-05	DDA-503	H-05S5			TG-S50
C29	.05		TTD-05	DDA-503	H-05S5			TG-S50
C30	.05		TTD-05	DDA-503	H-05S5			TG-S50
C31	.05		TTD-05	DDA-503	H-05S5			TG-S50
C32	.05		TTD-05	DDA-503	H-05S5			TG-S50
C33	.05		TTD-05	DDA-503	H-05S5			TG-S50
C34	.05		TTD-05	DDA-503	H-05S5			TG-S50
C35	.001		DI 1000	DM-102	H-05D1	CCD-102	GP210	5GA-D10
C36	.1		TTD-1	DA-104	H-05P1			TH-P10
C37	.2	#101502		UK10-204				
C38	.2	#101502		UK10-204				
C39	.05		TTD-05	DDA-503	H-05S5			TG-S50
C40	.05		TTD-05	DDA-503	H-05S5			TG-S50
C41	.1		TTD-1	DA-104	H-05P1			TH-P10
C42	.05		TTD-05	DDA-503	H-05S5			TG-S50

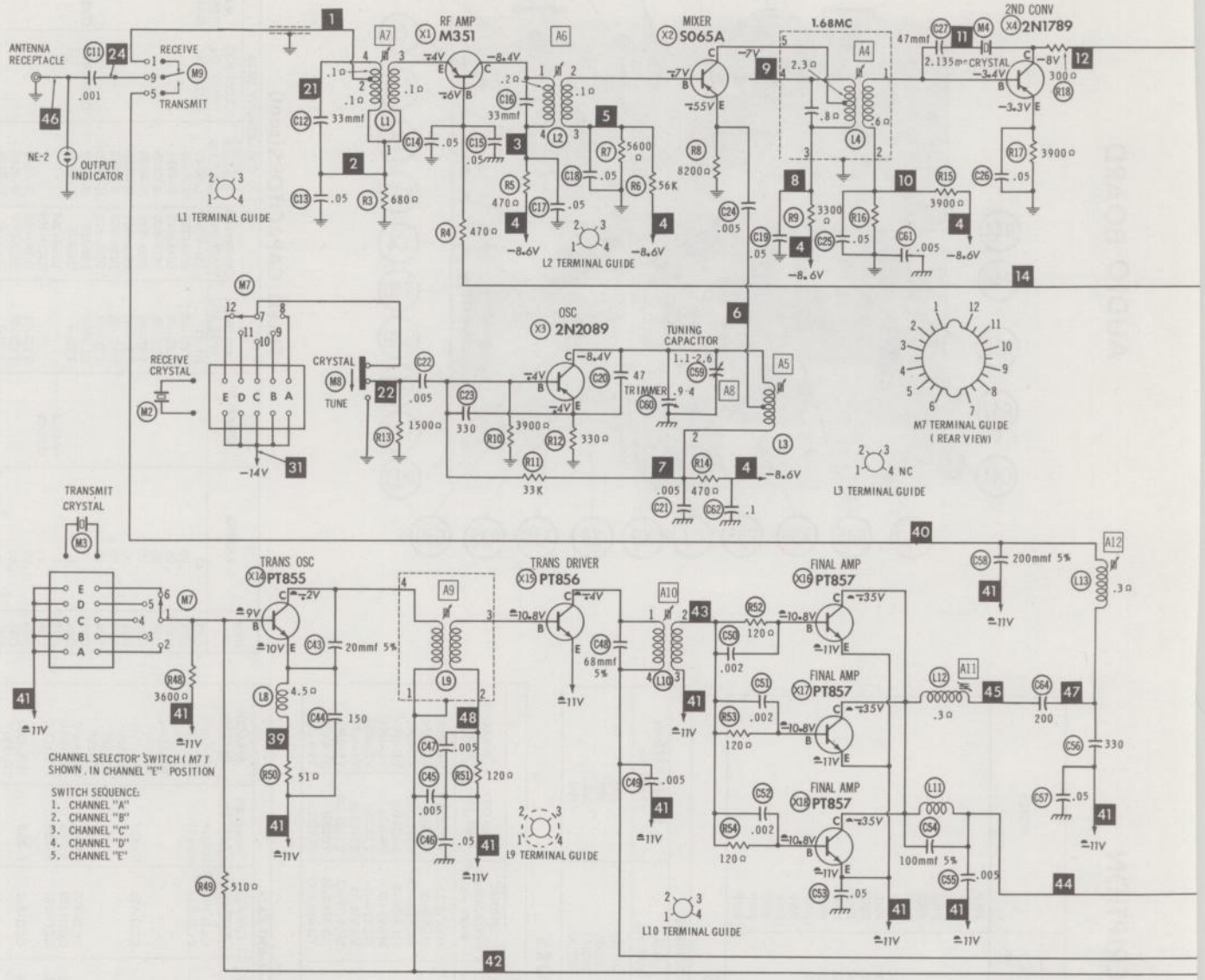

ALL MEASURMENTS MADE IN RECEIVE POSITION UNLESS OTHERWISE DESIGNATED
▲ MEASURED IN TRANSMIT POSITION

RESISTANCE MEASUREMENTS NOT GIVEN BECAUSE OF THE WIDE VARIATION IN INTERNAL TRANSISTOR RESISTANCE.

1. DC voltage measurements taken with vacuum tube voltmeter.
2. Socket connections or transistor terminals are shown as bottom views.
3. Measured values are from socket pin or terminal to common ground.
4. Nominal tolerance on component values makes possible a variation of ±15% in voltage and resistance readings.
5. Volume control at maximum, no signal applied for voltage measurements.

A PHOTOFACT STANDARD NOTATION SCHEMATIC
with CIRCUITRACE

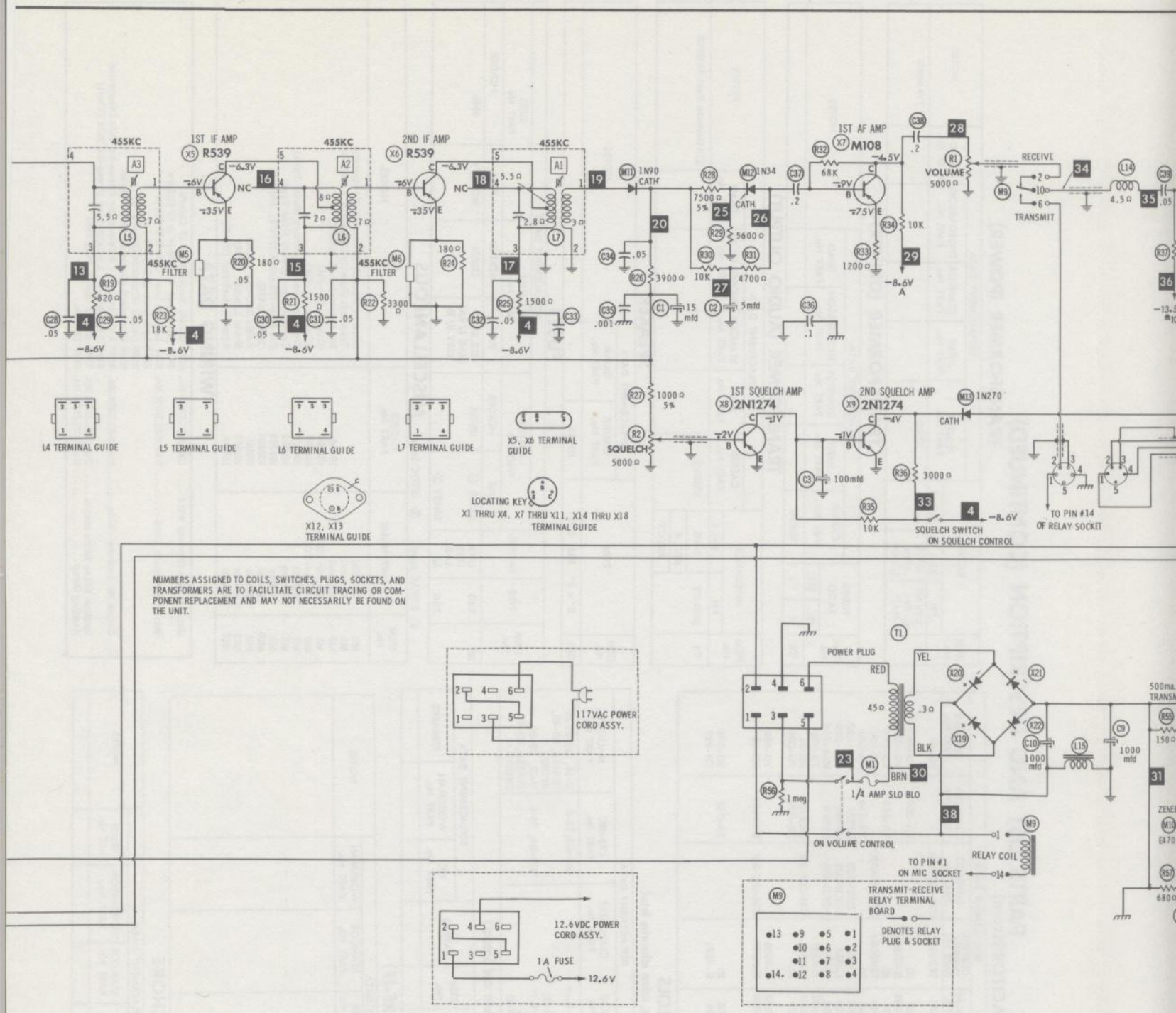
455KC
1ST IF AMP
X5 R539
2ND IF AMP
X6 R539
455KC FILTER
1N90
CATH
1N34
1ST AF AMP
X7 M108
VOLUME 5000Ω
RECEIVE
TRANSMIT
1ST SQUELCH AMP
X8 2N1274
2ND SQUELCH AMP
X9 2N1274
1N270
SQUELCH 5000Ω
SQUELCH SWITCH ON SQUELCH CONTROL
TO PIN #14 OF RELAY SOCKET
L4 TERMINAL GUIDE
L5 TERMINAL GUIDE
L6 TERMINAL GUIDE
L7 TERMINAL GUIDE
X5, X6 TERMINAL GUIDE
X12, X13 TERMINAL GUIDE
LOCATING KEY
X1 THRU X4, X7 THRU X11, X14 THRU X18 TERMINAL GUIDE
NUMBERS ASSIGNED TO COILS, SWITCHES, PLUGS, SOCKETS, AND TRANSFORMERS ARE TO FACILITATE CIRCUIT TRACING OR COMPONENT REPLACEMENT AND MAY NOT NECESSARILY BE FOUND ON THE UNIT.
117VAC POWER CORD ASSY.
POWER PLUG
RED
YEL
BLK
BRN
1/4 AMP SLO BLO
ON VOLUME CONTROL
RELAY COIL
TO PIN #1 ON MIC SOCKET
12.6VDC POWER CORD ASSY.
1A FUSE
12.6V
TRANSMIT-RECEIVE RELAY TERMINAL BOARD
DENOTES RELAY PLUG & SOCKET

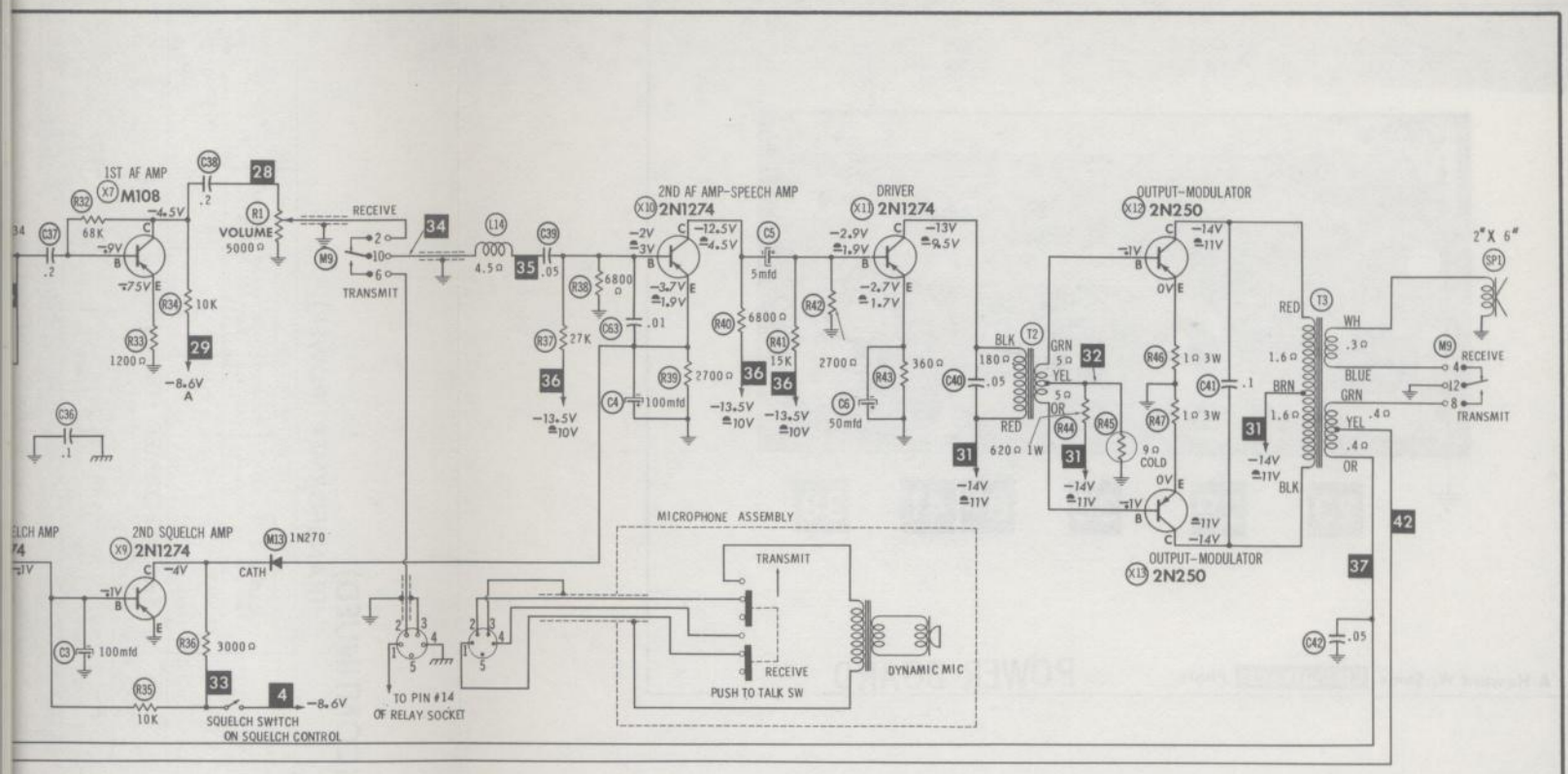

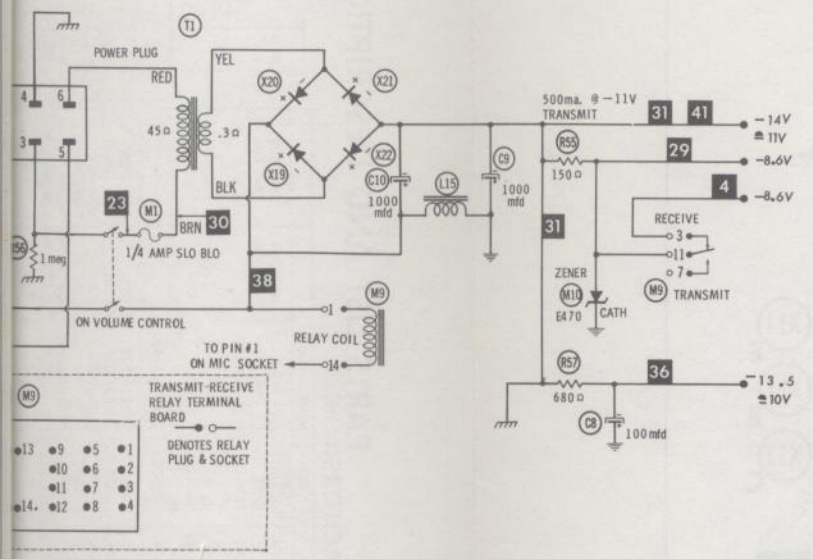

CADRE MODEL 510

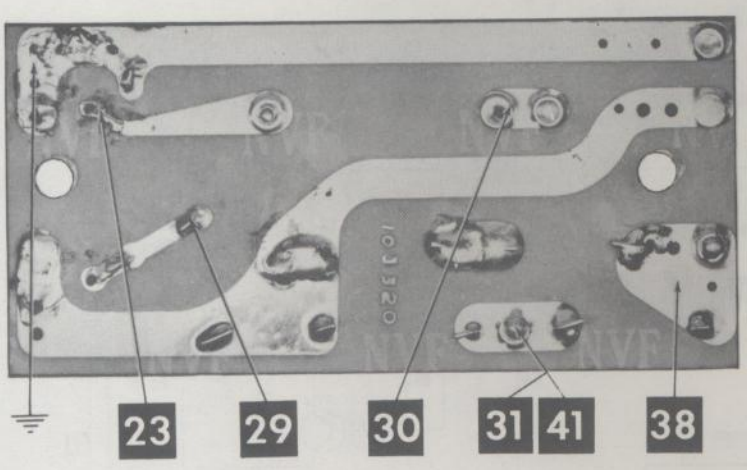

A Howard W. Sams CIRCUITRACE® Photo

POWER BOARD

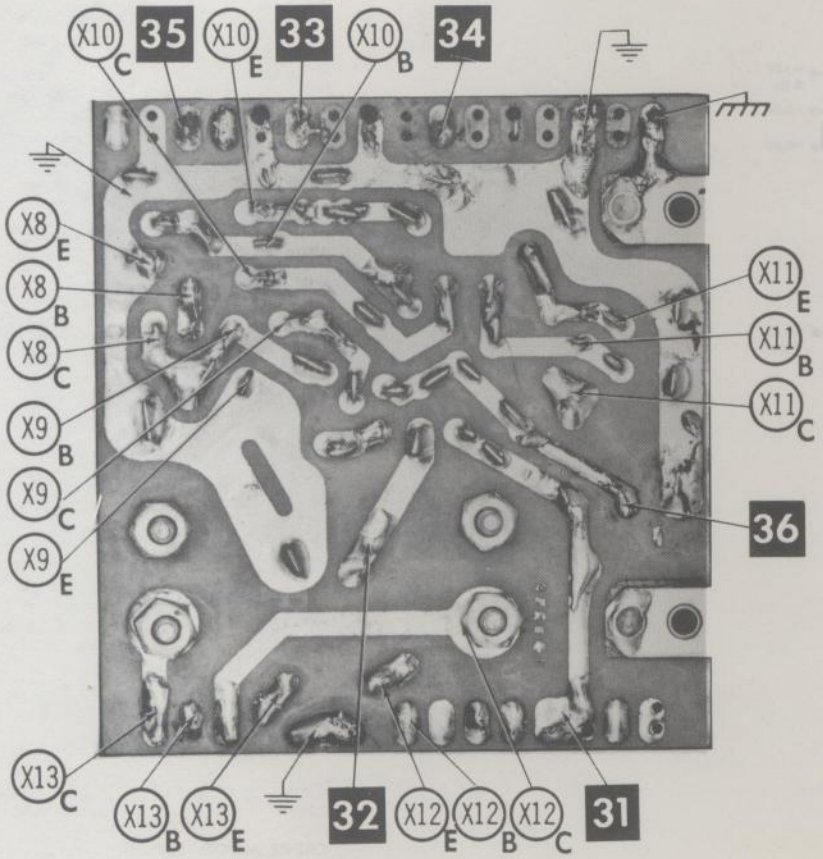

A Howard W. Sams CIRCUITRACE® Photo

AUDIO BOARD

PARTS LIST AND DESCRIPTION (CONTINUED)

FIXED CAPACITORS (cont)

ITEM No.	RATING	REMARKS	REPLACEMENT DATA				
			AEROVOX PART No.	CENTRALAB PART No.	CORNELL-DUBILIER PART No.	ELMENCO PART No.	MALLORY PART No.	SPRAGUE PART No.
C43	20 5%		1469-20	TCN-20	22P5Q2	CM-15C-200		MS-42
C44	150							
C45	.005		TTD-005	CK-502	H1		TA-250	TG-D50
C46	.05		TTD-05	DDA-503	H-05S5			TG-S50
C47	.005		TTD-005	CK-502	H1		TA-250	TG-D50
C48	68 5%		1469-68	TCN-68	22R5Q68	CM-15E-680		MS-468
C49	.005		TTD-005	CK-502	H1		TA-250	TG-D50
C50	.002			DM-202	L10D2	CCD-202	GP220	5GA-D20
C51	.002			DM-202	L10D2	CCD-202	GP220	5GA-D20
C52	.002			DM-202	L10D2	CCD-202	GP220	5GA-D20
C53	.05		TTD-05	DDA-503	H-05S5			TG-S50
C54	100 5%		1469-100	TCN-100	22R5T1	CM-15E-101	MCE235	MS-31
C55	.005		TTD-005	CK-502	H1		TA-250	TG-D50
C56	330							

TRANSFORMER (POWER)

ITEM No.	RATING			REPLACEMENT DATA				NOTES
	PRI.	SEC. 1	SEC. 2	CADRE PART No.	MERIT PART No.	STANCOR PART No.	THORDARSON PART No.	TRIAD PART No.	
T1	117VAC @ .08A (.21A)*	12V @ .130A (.5A)*		10U10					* Transmit

TRANSFORMER (DRIVER)

ITEM No.	TURNS RATIO		REPLACEMENT DATA					NOTES
	PRI.	SEC.	CADRE PART No.	MERIT PART No.	STANCOR PART No.	THORDARSON PART No.	TRIAD PART No.	
T2	4	1	10U020					

TRANSFORMER (AUDIO OUTPUT)

PARTS LIST AND DESCRIPTION (CONTINUED)

FIXED CAPACITORS(cont)

ITEM No.	RATING	REMARKS	REPLACEMENT DATA					
			AEROVOX PART No.	CENTRALAB PART No.	CORNELL-DUBILIER PART No.	ELMENCO PART No.	MALLORY PART No.	SPRAGUE PART No.
C43	20 5%		1469-20	TCN-20	22P5Q2	CM-15C-200		MS-42
C44	150							
C45	.005		TTD-005	CK-502	H1		TA-250	TG-D50
C46	.05		TTD-05	DDA-503	H-05S5			TG-S50
C47	.005		TTD-005	CK-502	H1		TA-250	TG-D50
C48	68 5%		1469-68	TCN-68	22R5Q68	CM-15E-680		MS-468
C49	.005		TTD-005	CK-502	H1		TA-250	TG-D50
C50	.002			DM-202	L10D2	CCD-202	GP220	5GA-D20
C51	.002			DM-202	L10D2	CCD-202	GP220	5GA-D20
C52	.002			DM-202	L10D2	CCD-202	GP220	5GA-D20
C53	.05		TTD-05	DDA-503	H-05S5			TG-S50
C54	100 5%		1469-100	TCN-100	22R5T1	CM-15E-101	MCE235	MS-31
C55	.005		TTD-005	CK-502	H1		TA-250	TG-D50
C56	330							
C57	.05		TTD-05	DDA-503	H-05S5			TG-S50
C58	200 5%		1469-200	TCN-200	22R5T2	CM-15E-201	MCE237	MS-32
C59	1.1-2.6							
C60	.9-4	#103333						
C61	.005		TTD-005	CK-502	H1		TA-250	TG-D50
C62	.1		TTD-1	DA-104	H-05P1			TH-P10
C63	.01							
C64	200							

Cadre Part Number.

CONTROLS

All wattages 1/2 watt, or less, unless otherwise listed.

ITEM No.	USE	RESIST-ANCE	REPLACEMENT DATA				
			CADRE PART No.	CENTRALAB PART No.	CLAROSTAT PART No.	CTS-IRC PART No.	MALLORY PART No.
R1	Volume (Power Switch)	5000Ω	101007	B-11, KR-2, or (F2-5000, SU204, KR-2)		Q13-114, 76-2	U-12, US-27 or (UA53A, US-42, SF1000)
R2	Squelch (Squelch Switch)	5000Ω	101189	B-11, KR-1, or (F2-5000, SU204, KR-1)		Q13-114, 76-1	U-12, US-26, or (UA53A, US-41, SF1000)

RESISTORS (Power and Special)

ITEM No.	RATING	REPLACEMENT DATA			ITEM No.	RATING	REPLACEMENT DATA		
		IRC PART No.	WORKMAN PART No.	REMARKS			IRC PART No.	WORKMAN PART No.	REMARKS
R45	9Ω Cold			#101086					

Cadre Part Number

COILS (RF-IF)

ITEM No.	USE	REPLACEMENT DATA					NOTES
		CADRE PART No.	MERIT PART No.	MILLER PART No.	STANCOR PART No.	WORKMAN PART No.	
L1	Antenna	103325					
L2	RF	103326					
L3	Receiver Osc.	103327					
L4	1.68MC IF	101399					
L5	1st 455KC IF	101400					
L6	2nd 455KC IF	101018					
L7	3rd 455KC IF	101019					
L8	RF Choke (50uh)	1008-500					
L9	Transmit Osc.	103312					
L10	Buffer	103313					
L11	Final	103314					
L12	Antenna Load	103315					
L13	Antenna Load	103316					
L14	RF Choke (50uh)	1008-500					

FILTER CHOKE

ITEM No.	RATINGS			REPLACEMENT DATA					NOTES
	CURRENT (Measured)	DC RES.	INDUCTANCE (0 CURRENT 1000~)	CADRE PART No.	MERIT PART No.	STANCOR PART No.	THORDARSON PART No.	TRIAD PART No.	
L15	.500A	.5Ω	175MH	101056					

TRANSFORMER (POWER)

ITEM No.	RATING			REPLACEMENT DATA					NOTES
	PRI.	SEC. 1	SEC. 2	CADRE PART No.	MERIT PART No.	STANCOR PART No.	THORDARSON PART No.	TRIAD PART No.	
T1	117VAC @ .08A (.21A)*	12V @ .130A (.5A)*		101110					* Transmit

TRANSFORMER (DRIVER)

ITEM No.	TURNS RATIO		REPLACEMENT DATA						NOTES
	PRI.	SEC.	CADRE PART No.	MERIT PART No.	STANCOR PART No.	THORDARSON PART No.	TRIAD PART No.		
T2	4	1	101020						

TRANSFORMER (AUDIO OUTPUT)

ITEM No.	IMPEDANCE		REPLACEMENT DATA					NOTES
	PRI.	SEC. 1	CADRE PART No.	MERIT PART No.	STANCOR PART No.	THORDARSON PART No.	TRIAD PART No.	
T3	100Ω CT	3-4Ω	101021①					① Alternate Part #104088
		SEC. 2						
		25Ω CT						

SPEAKER

ITEM No.	TYPE	REPLACEMENT DATA		NOTES
		CADRE PART No.*	QUAM PART No.	
SP1	2" x 6" PM 3-4Ω	101025		

FUSES

ITEM No.	TYPE	RATING	REPLACEMENT DATA					
			CADRE PART No.		LITTELFUSE PART No.		BUSS PART No.	
			FUSE	HOLDER	FUSE	HOLDER	FUSE	HOLDER
M1	3AG	1/4A 125V S/B	101095 ①	101094	313.250 (3AG 1/4A) 125V S/B	121004	MDL 1/4	4405
	3AG	1A	101437 ②					

① 117VAC Input. ② 12VDC Input.

MISCELLANEOUS

ITEM No.	PART NAME	CADRE PART No.	NOTES
M2	Crystal		Receive (Specify Channel & Frequency)
M3	Crystal		Transmit (Specify Channel & Frequency)
M4	Crystal	101116	2nd Converter (2.135MC)
M5	Trans-Filter	101897	(Clevite TF-014)
M6	Trans-Filter	101897	(Clevite TF-014)
M7	Switch	104018	Channel Selector (Rotary Wafer Type)
M8	Switch	101029	Crystal-Tune (DPDT Slide Type)
M9	Relay	103335	Receive-Transmit (4PDT, 3A)
M10	Diode	100624	(Zener E470)
M11	Diode	101153	Audio Detector (1N90)
M12	Diode	101679	Noise Limiter (1N34)
M13	Diode	101154	Squelch Rectifier (1N270)

WIRING DATA

General-use Hook-up Wire .... Use BELDEN No. 8530 (Solid) Available in 12 Colors
8524 (Stranded) Available in 12 Colors
Shielded Antenna Lead ..... Use BELDEN No. 8214 Lowest Loss (RG-8/U Type)
8237 Low Loss (RG-8/U)
8240 (Solid) Miniature (RG-58/U)
8259 (Stranded) Miniature (RG-58A/U)
Coiled Microphone Cable ..... Use BELDEN No. 8497 3 Conductor- 1 Shielded for Press-to-Talk (Neoprene)
8496 3 Conductor- 1 Shielded for Press-to-Talk (Vinyl)
Ignition Noise Suppression .... Use BELDEN No. 7300-Series Spark-Plug Sets
Bonding Strap ..... Use BELDEN No. 8661 (3/8 In.)

TRADE NAME: Poly-Comm Model SENIOR 23

SUPPLIER: Polytronics Lab. Inc., 388 Getty Ave., Clifton, N. J.

TYPE SET: 14 Tube Transceiver

POWER SUPPLY: 110 – 120 Volts AC, 60 Cycles (or) 12 Volt Storage Battery

RATING: 73 Watts, .73 Amp. @ 117VAC
5.4 Amp. @ 12.6VDC

TUNING RANGE: All 23 CB Channels

ALIGNMENT INSTRUCTIONS

Suggested Alignment Tools:
A1 thru A12, A15, A16..... GENERAL CEMENT #8271, 8722..... WALSCO #2519
A13, A14, A17 thru A23.... GENERAL CEMENT #8282, 8606, 8606-L..... WALSCO #2526, 2543, 2544

RECEIVER ALIGNMENT

SIGNAL GENERATOR	CHANNEL	ADJUST	REMARKS
High side thru .001mfd to pin 7 of V4, low side to chassis. (Tune to 455KC, Unmod.)	Any	A1, A2, A3, A4, A5, A6, A7, A8	Connect DC probe of VTVM to point (A), common to chassis, adjust for maximum deflection.
High side thru .001mfd to pin 4 of V2 (1st mixer), low side to chassis. (Tune to 6MC Mod.)	Any	A9, A10, A11, A12	"
High side to antenna terminal, low side to chassis. (Tune to desired channel.)	Near Mid-range	A13, A14, A15, A16	"

TRANSMITTER ALIGNMENT

Only those persons properly licensed are permitted to make repairs or adjustments which may result in illegal operation. (Refer to FCC rules and regulations Part 19, Subpart D, Section 19.71).

The frequency of the transmitter should be checked periodically with a secondary frequency standard to insure proper and legal operation.

Best results will be obtained when adjusting the final RF output circuit if the antenna normally used is connected and the chassis is as nearly in the cabinet as possible.

	CHANNEL	ADJUST	REMARKS
Use front panel meter. Meter switch to S-RF.	Any	A17, A18, A19, A20, A21, A22, A23	Adjust for maximum. Meter should indicate a MINIMUM of 3.5 Watts.

RELAY SENSITIVITY

		ADJUST	REMARKS
Connect DC probe of VTVM to TP8, (335V), common to TP4 (Pin 1, V11)		R4	Adjust R4 to close relay. With relay closed, turn channel selector to a point between channels and adjust R4 for a reading of 34 volts.

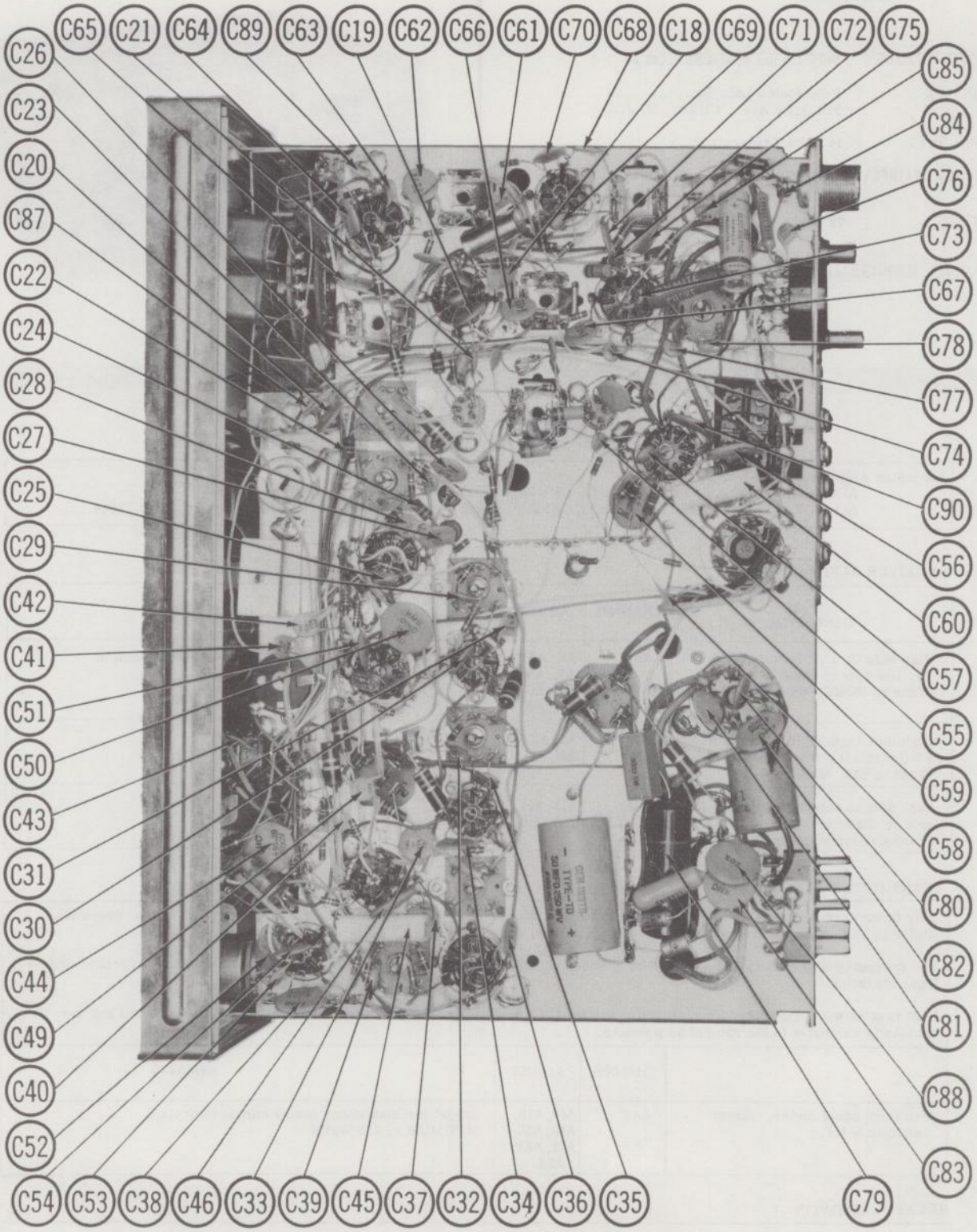

CHASSIS BOTTOM VIEW CAPACITOR IDENT
(ALSO SEE PAGE 143)

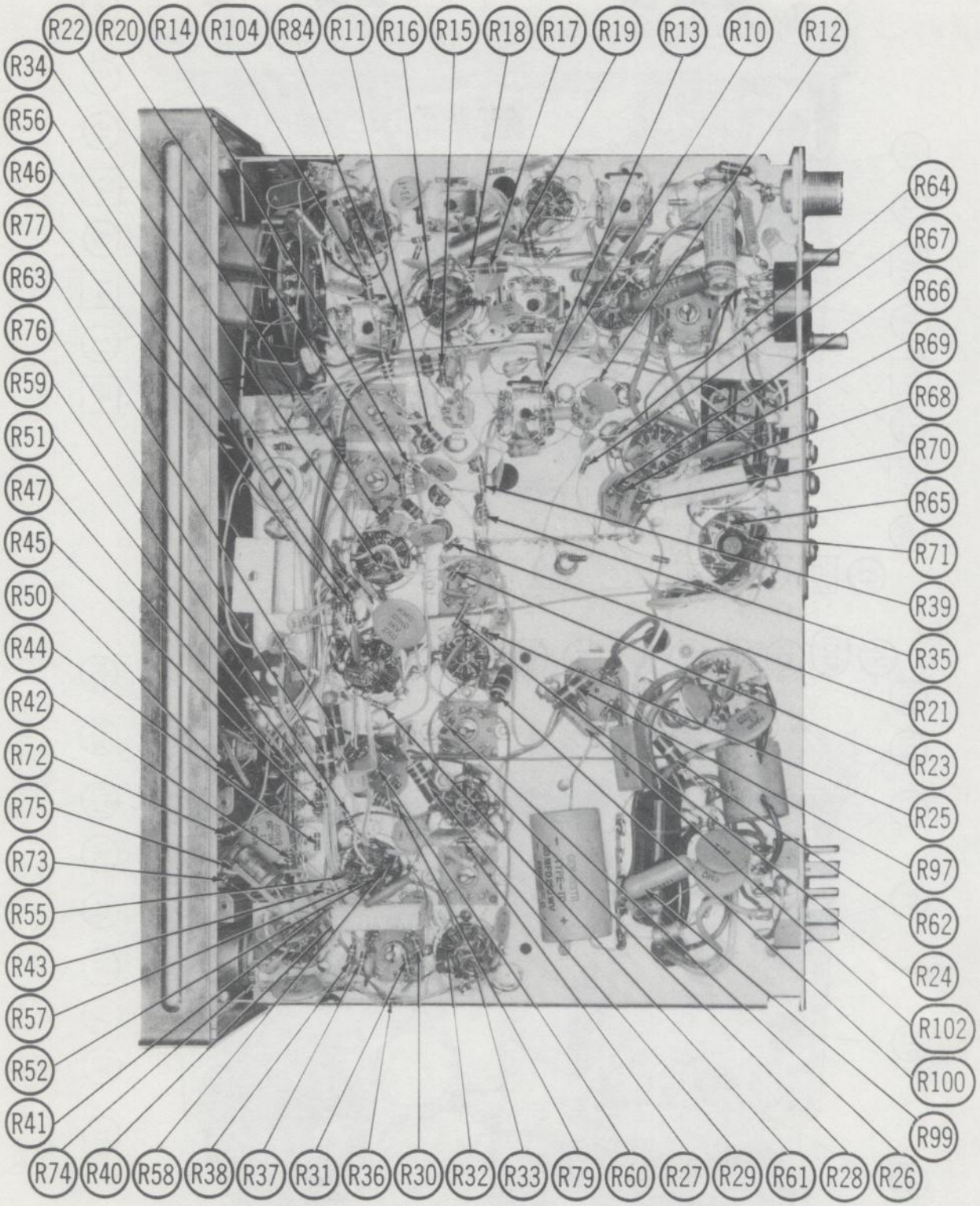

CHASSIS BOTTOM VIEW RESISTOR IDENT
(ALSO SEE PAGE 143)

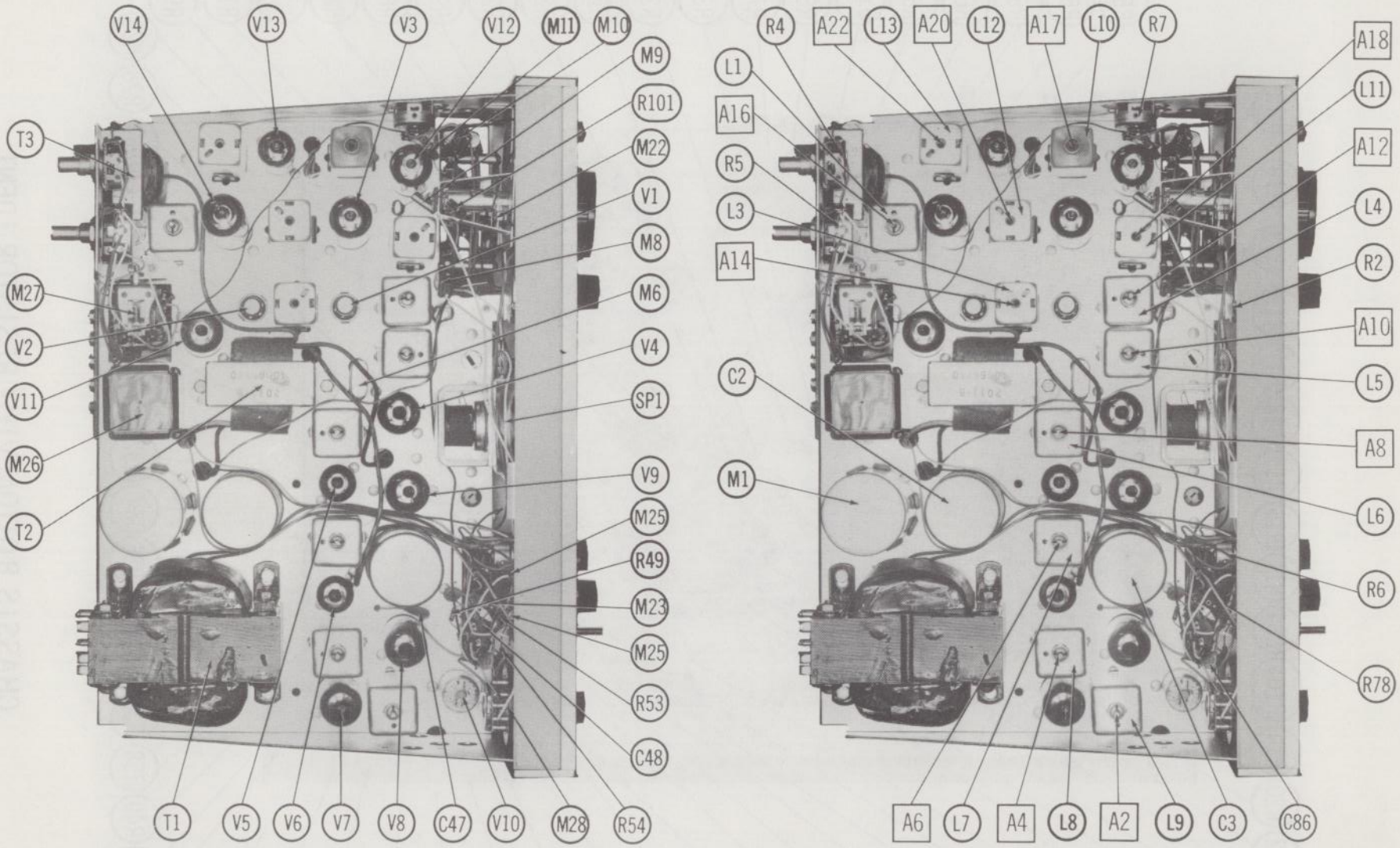

CHASSIS TOP VIEW

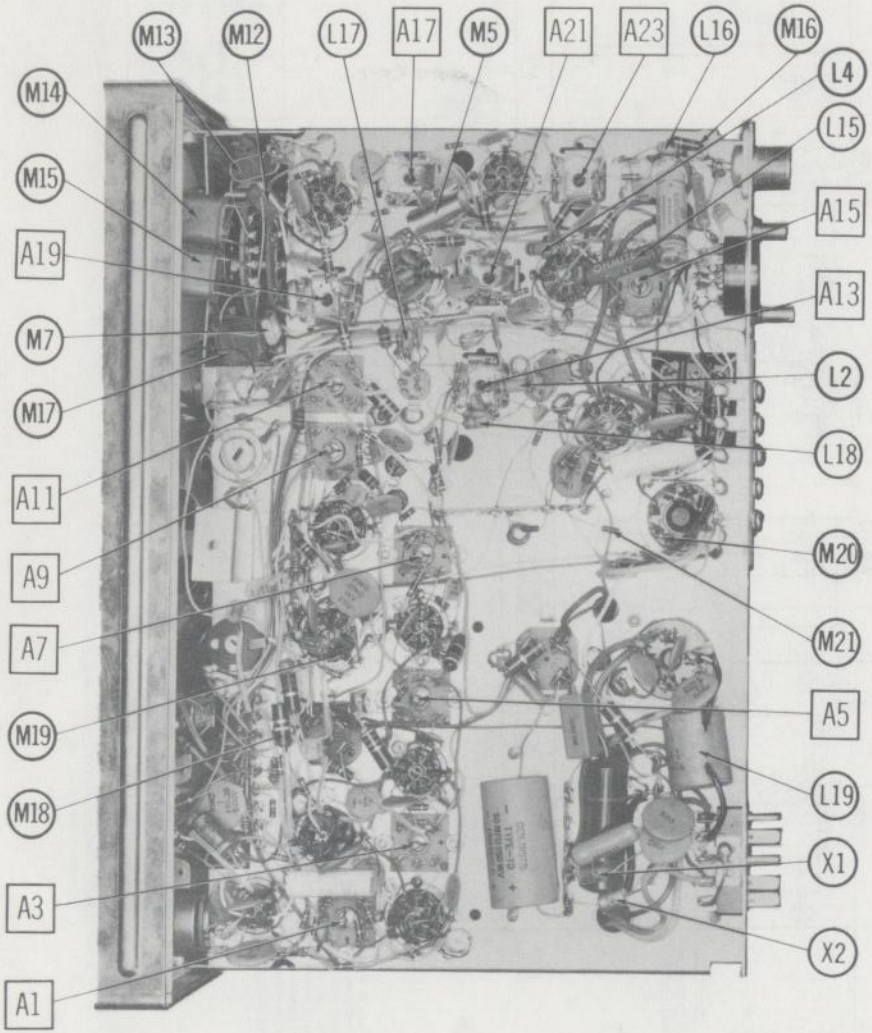

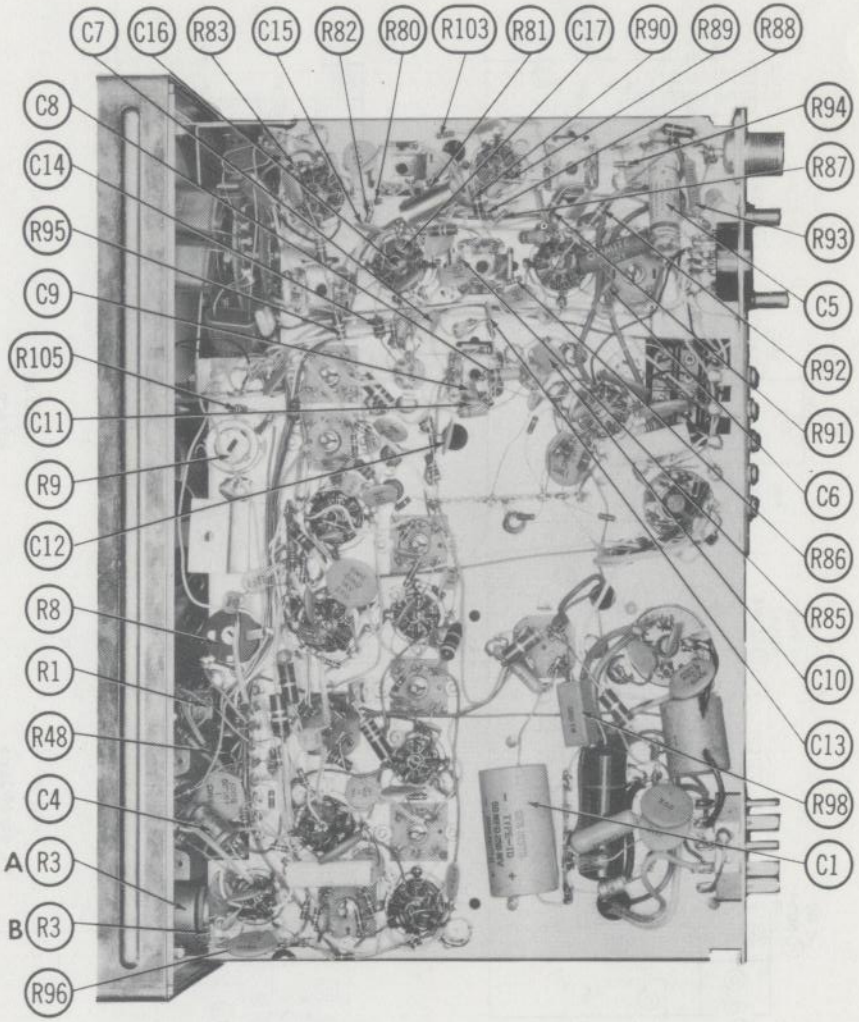

ALIGHMENT INDUCTOR AND MISC

CHASSIS BOTTOM VIEW

CAPACITOR AND RESISTOR

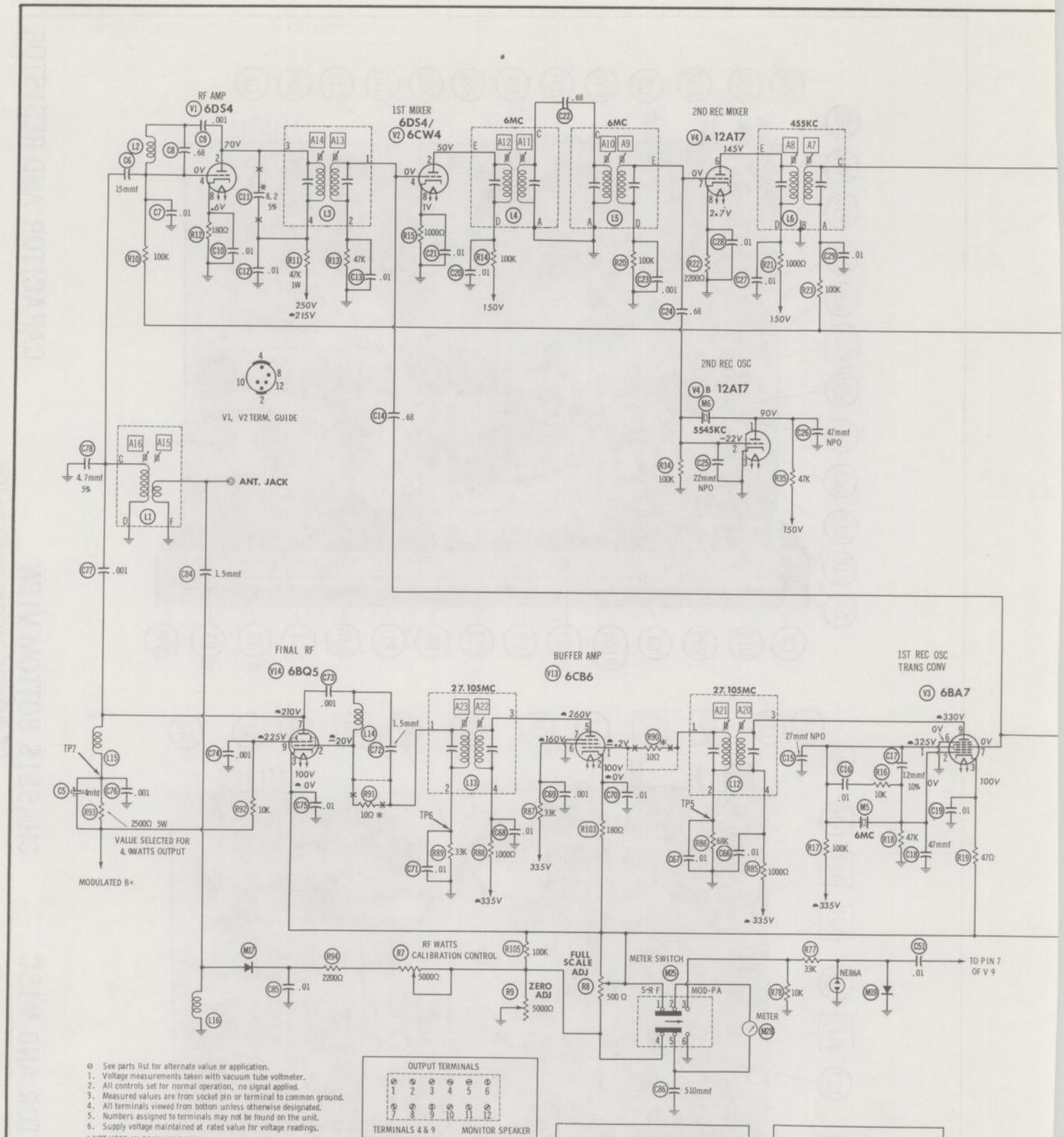

- See parts list for alternate value or application.
1. Voltage measurements taken with vacuum tube voltmeter.
2. All controls set for normal operation, no signal applied.
3. Measured values are from socket pin or terminal to common ground.
4. All terminals viewed from bottom unless otherwise designated.
5. Numbers assigned to terminals may not be found on the unit.
6. Supply voltage maintained at rated value for voltage readings.

* NOT USED IN SOME VERSIONS

OUTPUT TERMINALS

TERMINALS 4 & 9	MONITOR SPEAKER
TERMINALS 9 & 10	PA SPEAKER
TERMINALS 2 & 3	12.6VAC
TERMINALS 6, 7, & 8	RELAY
TERMINAL 5	COMMON

CRYSTAL SELECTOR M22A

POSITION A	CHANNELS 4, 8, 12, 16, 20, & 23
POSITION B	CHANNELS 3, 7, 11, 15, 19 & 22A
POSITION C	CHANNELS 2, 6, 10, 14, 18, & 22
POSITION D	CHANNELS 1, 5, 9, 13, 17, & 21

CRYSTAL SELECTOR M22B

POSITION A	CHANNELS 21 THRU 23
POSITION B	CHANNEL 17 THRU 20
POSITION C	CHANNELS 13 THRU 16
POSITION D	CHANNELS 9 THRU 12
POSITION E	CHANNELS 5 THRU 8
POSITION F	CHANNELS 1 THRU 4

POLY-COMM MODEL SENIOR 23

A PHOTOFACT STANDARD NOTATION SCHEMATIC

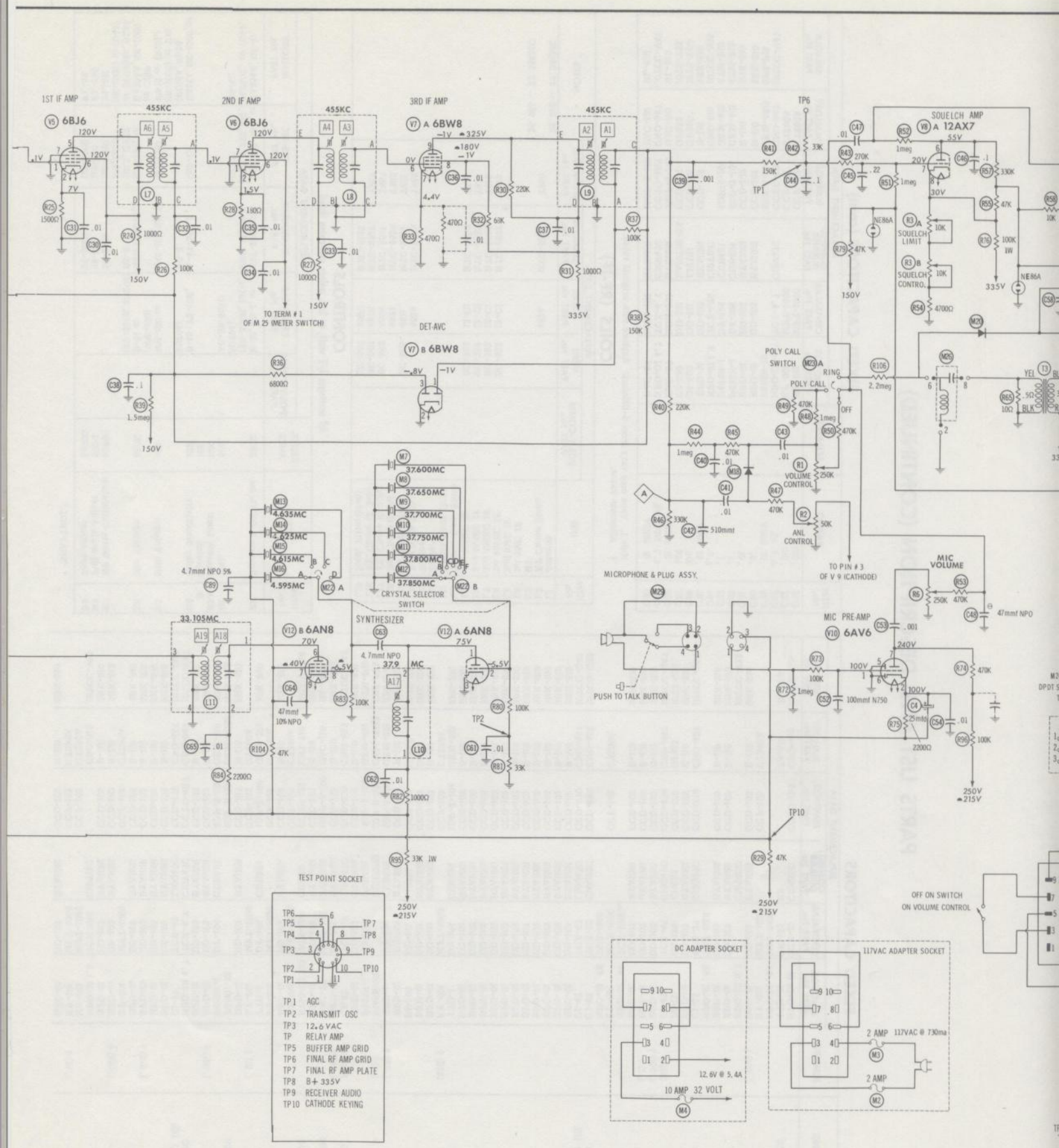
1ST IF AMP
V5 6BJ6
455KC
2ND IF AMP
V6 6BJ6
3RD IF AMP
V7 A 6BW8
TO TERM # 1 OF M 25 (METER SWITCH)
DET-AVC
V7 B 6BW8
SOUELCH AMP
V8 A 12AX7
SQUELCH LIMIT
SQUELCH CONTRO.
POLY CALL SWITCH
VOLUME CONTROL
ANL CONTROL
TO PIN # 3 OF V 9 (CATHODE)
MIC VOLUME
MIC PRE-AMP
V10 6AV6
MICROPHONE & PLUG ASSY.
PUSH TO TALK BUTTON
CRYSTAL SELECTOR SWITCH
SYNTHESIZER
V12 B 6AN8
V12 A 6AN8
TEST POINT SOCKET
TP1 AGC
TP2 TRANSMIT OSC
TP3 12.6 VAC
TP RELAY AMP
TP5 BUFFER AMP GRID
TP6 FINAL RF AMP GRID
TP7 FINAL RF AMP PLATE
TP8 B+ 335V
TP9 RECEIVER AUDIO
TP10 CATHODE KEYING
DC ADAPTER SOCKET
12.6V @ 5.4A
10 AMP 32 VOLT
117VAC ADAPTER SOCKET
2 AMP 117VAC @ 730ma
2 AMP
OFF ON SWITCH ON VOLUME CONTROL

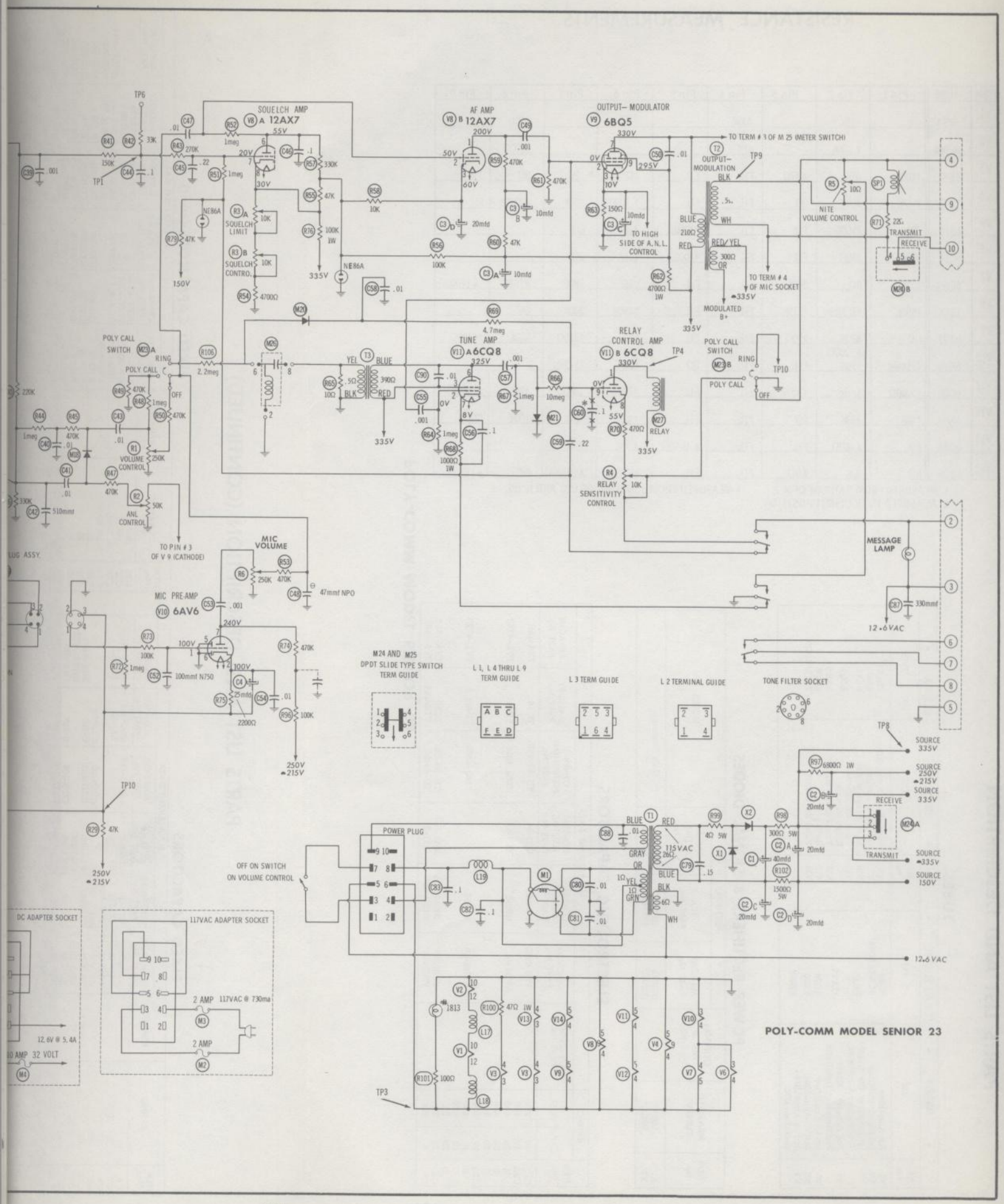
SQUELCH AMP
V8 A 12AX7
AF AMP
V8 B 12AX7
OUTPUT– MODULATOR
V9 6BQ5
TO TERM # 3 OF M 25 (METER SWITCH)
OUTPUT–MODULATION
TO HIGH SIDE OF A.N.L. CONTROL
TO TERM # 4 OF MIC SOCKET
MODULATED B+
NITE VOLUME CONTROL
TRANSMIT
RECEIVE
SQUELCH LIMIT
SQUELCH CONTRO.
POLY CALL SWITCH
TUNE AMP
V11 A 6CQ8
RELAY CONTROL AMP
V11 B 6CQ8
RELAY
RELAY SENSITIVITY CONTROL
VOLUME CONTROL
ANL CONTROL
TO PIN # 3 OF V 9 (CATHODE)
MIC VOLUME
MIC PRE-AMP
V10 6AV6
MESSAGE LAMP
12.6VAC
M24 AND M25 DPDT SLIDE TYPE SWITCH TERM GUIDE
L 1, L 4 THRU L 9 TERM GUIDE
L 3 TERM GUIDE
L 2 TERMINAL GUIDE
TONE FILTER SOCKET
SOURCE 335V
SOURCE 250V
SOURCE 150V
POWER PLUG
OFF ON SWITCH ON VOLUME CONTROL
115VAC
DC ADAPTER SOCKET
117VAC ADAPTER SOCKET
2 AMP 117VAC @ 730ma
12.6V @ 5.4A
32 VOLT
POLY-COMM MODEL SENIOR 23

PARTS LIST AND DESCRIPTION

TUBES

◆ AMPEREX ◆ GENERAL ELECTRIC ◆ RCA ◆ RAYTHEON ◆ SYLVANIA ◆

ITEM No.	USE	TYPE
V1	RF Amplifier	6DS4
V2	1st Receiver Mixer	6CW4/6DS4
V3	1st Receiver Oscillator-Transmitter Converter	6BA7
V4	2nd Receiver Mixer-2nd Receiver Oscillator	12AT7
V5	1st IF Amplifier	6BJ6
V6	2nd IF Amplifier	6BJ6
V7	3rd IF Amplifier-Detector-AGC	6BW8
V8	Squelch - AF Amplifier	12AX7
V9	Output-Modulator	6BQ5
V10	Mic. Preamplifier	6AV6
V11	Tune Amplifier-Relay Control	6CQ8
V12	Trans. Osc. -Mixer	6AN8
V13	Buffer	6CB6
V14	Final RF Output	8327/6BQ5

POWER RECTIFIERS & SIGNAL DIODES

ITEM No.	MEASURED CURRENT	ORIGINAL Part or Type No.	RECTIFIERS			NOTES
			MALLORY PART No.	RCA PART No.	SARKES TARZIAN PART No.	
X1	.085A *		1N2070	1N1763	F6	* .125A Transmit
X2	.085A *		1N2070	1N1763	F6	

ELECTROLYTIC CAPACITORS

ITEM No.	RATING		REPLACEMENT DATA						
	CAP.	VOLT.	POLY-COMM PART No.	AEROVOX PART No.	CORNELL-DUBILIER PART No.	GENERAL ELECTRIC PART No.	GENERAL INSTRUMENT PART No.	MALLORY PART No.	SPRAGUE PART No.
C1	40	250		PRS-1580	BR4025	QT1-14	TD-40-250	TC58	TVA-1511
C2A	20	400							
B	20	400		AFH4-14	D0130	XC4-14	TMQ-4616	FP444	TVL-4763
C	20	400							
D	20	400							
C3A	10	450							
B	10	450		AFH4-59	D0480		TMQ-4505	FP434.5	TVL-4723
C	10	450							
D	20	25							
C4	25	20		PRS1260	BBR25-25	QT1-15	TD-50-25	TC26	TVA-1205
C5	4	150		PRS1400	BBR4-150	QT1-2	TD-4-150	TT150X4	TVA-1402

RESISTANCE MEASUREMENTS

ITEM	TUBE	Pin 1	Pin 2	Pin 3	Pin 4	Pin 5	Pin 6	Pin 7	Pin 8	Pin 9
V1	6DS4		†55K		400K					
V2	6CW4		‡ 100K		47K				1000Ω	
V3	6BA7	†100K	47K	▲47Ω	FIL.	FIL.	0Ω	.2Ω	0Ω	†1K
V4	12AT7	‡ 47K	100K	0Ω	FIL.	FIL.	‡ 1000Ω	100K	2200Ω	FIL.
V5	6BJ6	300K	1500Ω	FIL.	FIL.	‡1000Ω	‡1000Ω	0Ω		
V6	6BJ6	300K	180Ω	FIL.	FIL.	‡1000Ω	‡55K	0Ω		
V7	6BW8	125K	0Ω	240K	FIL.	FIL.	.1Ω	180Ω	▲†68K	▲†1000Ω
V8	12AX7	†500K	†1.5meg	†115K	FIL.	FIL.	†450K	240K	8K	
V9	6BQ5	NC	470K	150Ω	FIL.	FIL.	NC	†210Ω	NC▲	†4700Ω
V10	6AV6	1.1meg	▲2200Ω †56K	FIL.	FIL.	0Ω	0Ω	†575K		
V11	6CQ8	†5000Ω	1meg	†300Ω	FIL.	FIL.	†700Ω	1000Ω	‡50K	11meg
V12	6AN8	†40K	133K	0Ω	FIL.	FIL.	†42K	†87K	100K	0Ω
V13	6CB6	68K	▲180Ω	FIL.	FIL.	▲13.00Ω	▲33K	0Ω		
V14	6BQ5	NC	33K	▲0Ω	FIL.	FIL.	NC	▲†3100Ω	NC	▲†10.6K

† MEASURED FROM CATHODE OF X 2.
▲ MEASURED IN TRANSMIT POSITION.
‡ MEASURED FROM JUNCTION OF C2D AND R 102.

PARTS LIST AND DESCRIPTION (CONTINUED)

FIXED CAPACITORS

ITEM No.	RATING	REMARKS	REPLACEMENT DATA					
			AEROVOX PART No.	CENTRALAB PART No.	CORNELL-DUBILIER PART No.	ELMENCO PART No.	MALLORY PART No.	SPRAGUE PART No.
C6	15		NPO-DI 15	TCZ-15	C10Q15C	CCTO-150	CNO-415	10TCC-Q15
C7	.01 100V		TTD-01	CK-103	H2		TA-110	TG-S10
C8	.68		NPO-SI .68	TCZ-R68				
C9	.001		EF-001	MFT-1000		CCF-102	CT280A	
C10	.01	(.001) †	BPD-01	DD-103	BYA10S1	CCD-103	B-110	5HK-S10
C11	8.2 5%		NPO-DI 8.2		C10V82C			10TCC-V22
C12	.01		BPD-01	DD-103	BYA10S1	CCD-103	B-110	5HK-S10
C13	.01		BPD-01	DD-103	BYA10S1	CCD-103	B-110	5HK-S10
C14	.68		NPO-SI .68	TCZ-R68				
C15	27 NPO		CI-27	TCZ-27	C10Q27C	CCD-270	CNO-427	10TCC-Q27
C16	.01		BPD-01	DD-103	BYA10S1	CCD-103	B-110	5HK-S10

FIXED CAPACITORS (cont)

ITEM No.	RATING	REMARKS	REPLACEMENT DATA					
			AEROVOX PART No.	CENTRALAB PART No.	CORNELL-DUBILIER PART No.	ELMENCO PART No.	MALLORY PART No.	SPRAGUE PART No.
C76	.001		EF-001	MFT-1000		CCF-102	CT280A	
C77	.001		EF-001	MFT-1000		CCF-102	CT280A	
C78	4.7 5%		NPO-DI 4.7	TCZ-4.7	C10V47C	CCTO-4R7	CNO-547	10TCC-V47
C79	.15 600V		P688N-15			6DP-5-154	GEM-6015	6PS-P15
C80	.01		BPD-01	DD-103	BYA10S1	CCD-103	B-110	5HK-S10
C81	.01		BPD-01	DD-103	BYA10S1	CCD-103	B-110	5HK-S10
C82	.1		P488N-1	DF-104	CUB4P1	4DP-3-104	GEM-401	4TM-P10
C83	.1		P488N-1	DF-104	CUB4P1	4DP-3-104	GEM-401	4TM-P10
C84	1.5		NPO-SI 1.5	TCZ-1R5	C10V15C		CNO-515	10TCC-V15
C85	.01 100V		BPD-01	DD-103	BYA10S1	CCD-103	B-110	5HK-S10
C86	510		DI-500	DD-511	L10T51	CCD-501	GP350	10TS-T50

PARTS LIST AND DESCRIPTION (CONTINUED)

FIXED CAPACITORS

ITEM No.	RATING	REMARKS	REPLACEMENT DATA					
			AEROVOX PART No.	CENTRALAB PART No.	CORNELL-DUBILIER PART No.	ELMENCO PART No.	MALLORY PART No.	SPRAGUE PART No.
C6	15		NPO-DI 15	TCZ-15	C10Q15C	CCTO-150	CNO-415	10TCC-Q15
C7	.01 100V		TTD-01	CK-103	H2		TA-110	TG-S10
C8	.68		NPO-SI .68	TCZ-R68				
C9	.001		EF-001	MFT-1000		CCF-102	CT280A	
C10	.01	(.001) †	BPD-01	DD-103	BYA10S1	CCD-103	B-110	5HK-S10
C11	8.2 5%		NPO-DI 8.2		C10V82C			10TCC-V22
C12	.01		BPD-01	DD-103	BYA10S1	CCD-103	B-110	5HK-S10
C13	.01		BPD-01	DD-103	BYA10S1	CCD-103	B-110	5HK-S10
C14	.68		NPO-SI .68	TCZ-R68				
C15	27 NPO		CI-27	TCZ-27	C10Q27C	CCD-270	CNO-427	10TCC-Q27
C16	.01		BPD-01	DD-103	BYA10S1	CCD-103	B-110	5HK-S10
C17	12 10%		DI-12	DD-120	L10Q12	CCD-120	GP412	10TS-Q12
C18	47	(22) †	CI-47	TCZ-47	C10Q47C	CCD-470	CNO-447	10TCC-Q47
C19	.01	(.001) †	BPD-01	DD-103	BYA10S1	CCD-103	B-110	5HK-S10
C20	.01	(.1) †	BPD-01	DD-103	BYA10S1	CCD-103	B-110	5HK-S10
C21	.01		BPD-01	DD-103	BYA10S1	CCD-103	B-110	5HK-S10
C22	.68		NPO-SI .68	TCZ-R68				
C23	.001		EF-001	MFT-1000		CCF-102	CT280A	
C24	.68		NPO-SI .68	TCZ-R68				
C25	22 NPO		CI-22	TCZ-22	C10Q22C	CCD-220	CNO-422	10TCC-Q22
C26	47 NPO 10%		CI-47	TCZ-47	L10Q47C	CCD-470	CNO-447	10TCC-Q47
C27	.01		BPD-01	DD-103	BYA10S1	CCD-103	B-110	5HK-S10
C28	.01		BPD-01	DD-103	BYA10S1	CCD-103	B-110	5HK-S10
C29	.01		BPD-01	DD-103	BYA10S1	CCD-103	B-110	5HK-S10
C30	.01		BPD-01	DD-103	BYA10S1	CCD-103	B-110	5HK-S10
C31	.01		BPD-01	DD-103	BYA10S1	CCD-103	B-110	5HK-S10
C32	.01		BPD-01	DD-103	BYA10S1	CCD-103	B-110	5HK-S10
C33	.01		BPD-01	DD-103	BYA10S1	CCD-103	B-110	5HK-S10
C34	.01		BPD-01	DD-103	BYA10S1	CCD-103	B-110	5HK-S10
C35	.01		BPD-01	DD-103	BYA10S1	CCD-103	B-110	5HK-S10
C36	.01		BPD-01	DD-103	BYA10S1	CCD-103	B-110	5HK-S10
C37	.01		BPD-01	DD-103	BYA10S1	CCD-103	B-110	5HK-S10
C38	.1 100V		TTD-1	DF-104	CUB2P1	1DP-2-104	GEM-201	2PS-P10
C39	.001	(220) †	EF-001	MFT-1000		CCF-102	CT280A	
C40	.01		BPD-01	DD-103	BYA10S1	CCD-103	B-110	5HK-S10
C41	.01		BPD-01	DD-103	BYA10S1	CCD-103	B-110	5HK-S10
C42	510		DI-500	DD-511	L10T51	CCD-501	GP350	10TS-T50
C43	.01		BPD-01	DD-103	BYA10S1	CCD-103	B-110	5HK-S10
C44	.1	(.22) †	TTD-1	DF-104	CUB2P1	1DP-2-104	GEM-201	2PS-P10
C45	.22	(.1) †	P188N-22		CUB2P22	1DP-3-224	GEM-2022	2PS-P22
C46	.1		P488N-1	DF-104	CUB4P1	4DP-3-104	GEM-401	4TM-P10
C47	.01		BPD-01	DD-103	BYA10S1	CCD-103	B-110	5HK-S10
C48	47 NPO	Note 1	CI-47	TCZ-47	L10Q47C	CCD-470	CNO-447	10TCC-Q47
C49	.001	(.01) †	BPD-001	DD-102	BYA10D1	CCD-102	B-210	5HK-D10
C50	.01 1000V		DAC-27	DD16-103	HVE16S1	16DP-3-103	UAC-110	BL-S10
C51	.01		BPD-01	DD-103	BYA10S1	CCD-103	B-110	5HK-S10
C52	100 N750		N750-DI 100	TCN-100	C10T1U	CCTN-101	CN7-310	10TCU-T10
C53	.001		EF-001	MFT-1000		CCF-102	CT280A	
C54	.01		BPD-01	DD-103	BYA10S1	CCD-103	B-110	5HK-S10
C55	.001		EF-001	MFT-1000		CCF-102	CT280A	
C56	.1		TTD-1	DF-104	CUB2P1	1DP-2-104	GEM-201	2PS-P10
C57	.001	(.01) †	EF-001	MFT-1000		CCF-102	CT280A	
C58	.01		BPD-01	DD-103	BYA10S1	CCD-103	B-110	5HK-S10
C59	.22 600V		P688N-22			6DP-6-224	GEM-6022	6PS-P22
C60	.1		P488N-1	DF-104	CUB4P1	4DP-3-104	GEM-401	4TM-P10
C61	.01	(.001) †	BPD-01	DD-103	BYA10S1	CCD-103	B-110	5HK-S10
C62	.01		BPD-01	DD-103	BYA10S1	CCD-103	B-110	5HK-S10
C63	4.7 NPO		NPO-DI 4.7	TCZ-4.7	C10V47C	CCTO-4R7	CNO-547	10TCC-V47
C64	47 NPO 10%		CI-47	TCZ-47	L10Q47C	CCD-470	CNO-447	10TCC-Q47
C65	.01		BPD-01	DD-103	BYA10S1	CCD-103	B-110	5HK-S10
C66	.01		BPD-01	DD-103	BYA10S1	CCD-103	B-110	5HK-S10
C67	.01	(.001) †	BPD-01	DD-103	BYA10S1	CCD-103	B-110	5HK-S10
C68	.01		BPD-01	DD-103	BYA10S1	CCD-103	B-110	5HK-S10
C69	.001		EF-001	MFT-1000		CCF-102	CT280A	
C70	.01	(.001) †	BPD-01	DD-103	BYA10S1	CCD-103	B-110	5HK-S10
C71	.01		BPD-01	DD-103	BYA10S1	CCD-103	B-110	5HK-S10
C72	1.5		NPO-SI 1.5	TCZ-1R5	C10V15C		CNO-515	10TCC-V15
C73	.001		EF-001	MFT-1000		CCF-102	CT280A	
C74	.001	(.01) †	EF-001	MFT-1000		CCF-102	CT280A	
C75	.01		BPD-01	DD-103	BYA10S1	CCD-103	B-110	5HK-S10

FIXED CAPACITORS (cont)

ITEM No.	RATING	REMARKS	REPLACEMENT DATA					
			AEROVOX PART No.	CENTRALAB PART No.	CORNELL-DUBILIER PART No.	ELMENCO PART No.	MALLORY PART No.	SPRAGUE PART No.
C76	.001		EF-001	MFT-1000		CCF-102	CT280A	
C77	.001		EF-001	MFT-1000		CCF-102	CT280A	
C78	4.7 5%		NPO-DI 4.7	TCZ-4.7	C10V47C	CCTO-4R7	CNO-547	10TCC-V47
C79	.15 600V		P688N-15			6DP-5-154	GEM-6015	6PS-P15
C80	.01		BPD-01	DD-103	BYA10S1	CCD-103	B-110	5HK-S10
C81	.01		BPD-01	DD-103	BYA10S1	CCD-103	B-110	5HK-S10
C82	.1		P488N-1	DF-104	CUB4P1	4DP-3-104	GEM-401	4TM-P10
C83	.1		P488N-1	DF-104	CUB4P1	4DP-3-104	GEM-401	4TM-P10
C84	1.5		NPO-SI 1.5	TCZ-1R5	C10V15C		CNO-515	10TCC-V15
C85	.01 100V		BPD-01	DD-103	BYA10S1	CCD-103	B-110	5HK-S10
C86	510		DI-500	DD-511	L10T51	CCD-501	GP350	10TS-T50
C87	330		DI-330	DD-331	LA10T33-C4	CCD-331	GP333	10TS-T33
C88	.01 1000V		DAC-27	DD16-103	HVE16S1	16DP-3-103	UAC-110	BL-S10
C89	4.7 NPO 5%		NPO-DI 4.7	TCZ-4.7	C10V47C	CCTO-4R7	CNO-547	10TCC-V47
C90	.01 1000V		DAC-27	DD16-103	HVE16S1	16DP-3-103	UAC-110	BL-S10

Note 1. Vaue may vary from 0-100mmf. Replace with original value.
† Alternate Value.

COILS (RF-IF)

ITEM No.	USE	REPLACEMENT DATA					NOTES
		POLY-COMM PART No.	MERIT PART No.	MILLER PART No.	STANCOR PART No.	WORKMAN PART No.	
L1	Antenna						26.965 — 27.255MC
L2	RF Choke (15uh)			4624	RTC-8524	T862	
L3	RF						26.965 — 27.255MC
L4	1st 6MC IF						
L5	2nd 6MC IF						
L6	1st 455KC IF		BC-352	12-C1	RTC-8632	T616	
L7	2nd 455KC IF		BC-352	12-C1	RTC-8632	T616	
L8	3rd 455KC IF		BC-352	12-C1	RTC-8632	T616	
L9	4th 455KC IF		BC-352	12-C1	RTC-8632	T616	
L10	Trans. Osc. Plate						
L11	Trans. Conv. Grid						
L12	Buffer						
L13	Buffer						
L14	RF Choke (15uh)			4624	RTC-8524	T862	
L15	RF Choke (7uh)		BC-565	4611	RTC-8521	T821	
L16	RF Choke (15uh)			4624	RTC-8524	T862	
L17	Fil. Choke (2.2uh)		BC-563	4606	RTC-8517	T857	
L18	Fil. Choke (2.2uh)		BC-563	4606	RTC-8517	T857	
L19	Hash Filter(14uh)		BC-537	5220	RTC-9182		

CONTROLS

All wattages 1/2 watt, or less, unless otherwise listed.

ITEM No.	USE	RESISTANCE	REPLACEMENT DATA				
			POLY-COMM PART No.	CENTRALAB PART No.	CLAROSTAT PART No.	CTS-IRC PART No.	MALLORY PART No.
R1	Volume & Off-On Sw.	250K		B-51, KR-1, or (F2-250K, KR-1, SU204)	A47-250K-Z, SWE-12, RS-2	Q13-130, 76-1, or (BU2, CF23, SS1, GC)*	UA254A, US-41, SL2500, or (U44, US-41)
R2	ANL	50K		AC-59-503U			
R3A	Squelch Limit	10K					
B	Squelch	10K					
R4	Relay Sensitivity	10K		B-15 (F2-10K, SU204)	A-47-10K-Z, RS-2	Q13-116	UA14A, SK-1000, or (RU14A, SL38, SK-1000) or U18
R5	Nite Volume	10Ω		WN-100 or (WW-100)	A43-10, RS-2	WPK-10	VW10 or (R10L) or C10P
R6	Mic Volume	250K		B-51 or (F2-250K, SU204)	A47-250K-Z, RS-2	Q13-130, or (BU1, CF23, SS1, DC1)*	UA254A, SK-1000, or (RU254A, SL38, SK-1000) or (U44)
R7	RF Watts Calibration	5000Ω			39-5000	112-5000	FL-5K
R8	Full Scale Adjust	500Ω			39-500	112-500	FL-500
R9	Zero Adjust	5000Ω			39-5000	112-5000	FL-5K

* "SNAPTROL"

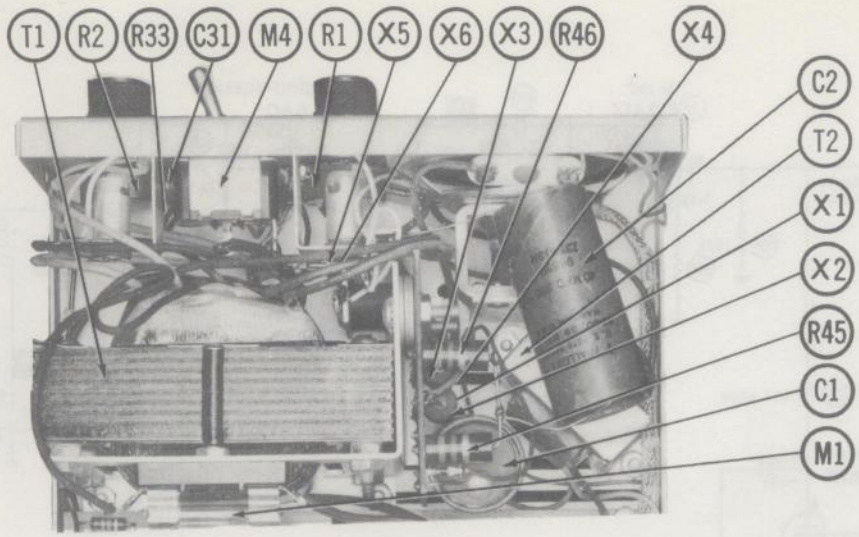

AC POWER

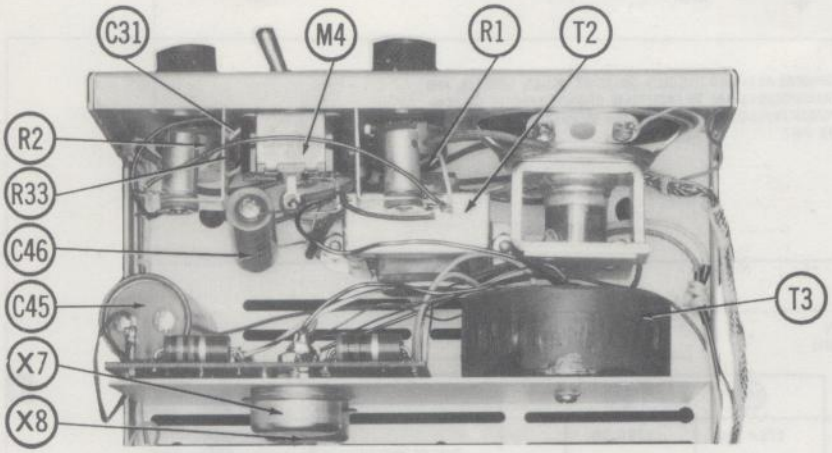

DC POWER SUPPLY

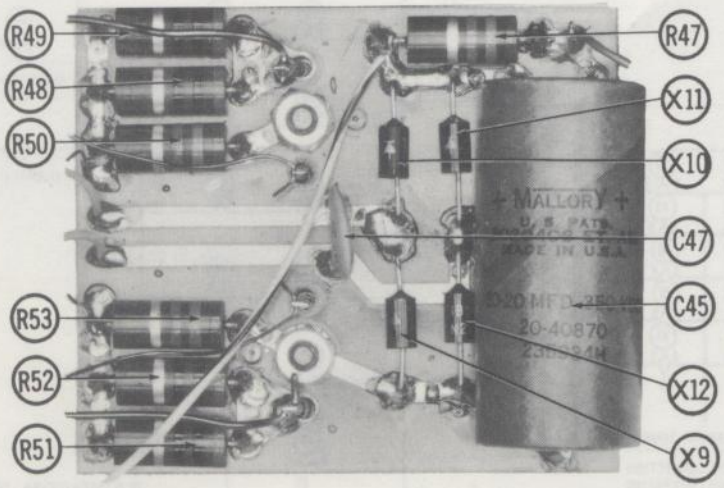

DC POWER SUPPLY BOARD

MAIN PARTS LIST AND DESCRIPTION

WIRING DATA

General-use Hook-up Wire	Use BELDEN No. 8530 (Solid) Available in 12 Colors 8524 (Stranded) Available in 12 Colors
Shielded Antenna Lead	Use BELDEN No. 8214 Lowest Loss (RG-8/U Type) 8237 Low Loss (RG-8/U) 8240 (Solid) Miniature (RG-58/U) 8259 (Stranded) Miniature (RG-58A/U)
Coiled Microphone Cable	Use BELDEN No. 8497 3 Conductor-1 Shielded for Press-to-Talk (Neoprene) 8498 3 Conductor-1 Shielded for Press-to-Talk (Vinyl)
Ignition Noise Suppression	Use BELDEN No. 7300-Series Spark-Plug Sets
Bonding Strap	Use BELDEN No. 8661 (3/8 In.)

TUBES

ITEM No.	AMPEREX USE	TYPE	GENERAL ELECTRIC USE	TYPE	RCA USE	ITEM No.	RAYTHEON USE	SYLVANIA USE	TYPE

FIXED CAPACITORS (cont)

ITEM No.	RATING	REMARKS	REPLACEMENT DATA: AEROVOX PART No.	CENTRALAB PART No.	CORNELL-DUBILIER PART No.	ELMENCO PART No.	MALLORY PART No.	SPRAGUE PART No.
C23	.001		BPD-001	DD-102	BYA10D1	CCD-102	B-210	5HK-D10
C24	.01		BPD-01	DD-103	BYA10S1	CCD-103	B-110	5HK-S10
C25	.01		BPD-01	DD-103	BYA10S1	CCD-103	B-110	5HK-S10
C26	.05 50V		BPD-05	DD-503	H-0585	*	TA-150	TG-550
C27	100 N150 5%	#300-0003-001						10TCP-T10
C28	.01		BPD-01	DD-103	BYA10S1	CCD-103	B-110	5HK-S10
C29	.001		BPD-001	DD-102	BYA10D1	CCD-102	B-210	5HK-D10
C30	.47 400V		P415LN-47		BC4P47J	4DP-6-474	GEM-4047	4TM-P47
C31	.047 400V		P488N-047	DD-503	CUB4S47	4DP-3-473	GEM-6147	4TM-S47
C32	.047 600V		P615LN-047	DD-503	BC6S47J	6DP-3-473	ACE-6147	6SE-S47
C33	.022 600V		P615LN-022	DD-203	BC6S22J	6DP-2-223	ACE-6122	6SE-S22
C34	.01		BPD-01	DD-103	BYA10S1	CCD-103	B-110	5HK-S10

PARTS LIST AND DESCRIPTION (CONTINUED)

RESISTORS (Power and Special)

ITEM No.	RATING	REPLACEMENT DATA			ITEM No.	RATING	REPLACEMENT DATA		
		IRC PART No.	WORKMAN PART No.	REMARKS			IRC PART No.	WORKMAN PART No.	REMARKS
R93 R98	2500Ω 5W 300Ω 5W	PW5-2500 PW5-300	5W-SQ-2500 5W-SQ-300	Note 1	R102	1500Ω 5W	PW5-1500	5W-SQ-1500	

Note 1. Value selected for 4.9 Watts output.

TRANSFORMER (POWER)

ITEM No.	RATING			REPLACEMENT DATA					NOTES
	PRI.	SEC. 1	SEC. 2	POLY-COMM PART No.	MERIT PART No.	STANCOR PART No.	THORDARSON PART No.	TRIAD PART No.	
T1	117VAC @ .6A or 12.6VDC @ 2.4A	115VAC @ .85A DC (.125ADC)*	12.6VAC @ 4.9A						* Transmit

TRANSFORMER (AUDIO OUTPUT)

ITEM No.	IMPEDANCE		REPLACEMENT DATA					NOTES
	PRI.	SEC.	POLY-COMM PART No.	MERIT PART No.	STANCOR PART No.	THORDARSON PART No.	TRIAD PART No.	
T2			2013-B					

TRANSFORMER (COUP)

ITEM No.	IMPEDANCE		REPLACEMENT DATA					NOTES
	PRI.	SEC.	POLY-COMM PART No.	MERIT PART No.	STANCOR PART No.	THORDARSON PART No.	TRIAD PART No.	
T3	3-4Ω	14K	715-W-1A					

SPEAKER

ITEM No.	TYPE	REPLACEMENT DATA		NOTES
		POLY-COMM PART No.	QUAM PART No.	
SP1	4" PM 3-4Ω		4A07	

VIBRATOR

ITEM No.	TYPE	INPUT VOLTS	FRE-QUENCY	REPLACEMENT DATA			NOTES
				POLY-COMM PART No.	CORNELL-DUBILIER PART No.	MALLORY PART No.	
M1	Interrupter	12.6	115~		6301	G1601	

FUSES

ITEM No.	TYPE	RATING	REPLACEMENT DATA					
			POLY-COMM PART No.		LITTELFUSE PART No.		BUSS PART No.	
			FUSE	HOLDER	FUSE	HOLDER	FUSE	HOLDER
M2	3AG	2A 250V			313002 (3AG 2A 250V)		MDL2	
M3	3AG	2A 250V			313002 (3AG 2A 250V)		MDL2	
M4	AGC	10A 32V			307010 (3AG 10A 32V)	342001	MDA10	HKP

MISCELLANEOUS

ITEM No.	PART NAME	POLY-COMM PART No.	NOTES
M5	Crystal		6MC
M6	Crystal		5545KC
M7	Crystal		37.600MC (Channels 1 thru 4)
M8	Crystal		37.650MC (Channels 5 thru 8)
M9	Crystal		37.700MC (Channels 9 thru 12)
M10	Crystal		37.750MC (Channels 13 thru 16)
M11	Crystal		37.800MC (Channels 17 thru 20)
M12	Crystal		37.850MC (Channels 21 thru 23)
M13	Crystal		4.635MC (Channels 1, 5, 9, 13, 17, & 21)
M14	Crystal		4.625MC (Channels 2, 6, 10, 14, 18, & 22)
M15	Crystal		4.615MC (Channels 3, 7, 11, 15, 19, & 22A)
M16	Crystal		4.595MC (Channels 4, 8, 12, 16, 20 & 23)
M17	Diode		Meter Rectifier (1N60)
M18	Diode		ANL Rectifier (HD6226)
M19	Diode		Meter Rectifier (HD6226)
M20	Diode		Relay Amp. Grid Coupling (HD6226)
M21	Diode		Relay Amp. Grid Coupling (HD6226)
M22	Switch		Channel Selector (Rotary Wafer Type)
M23	Switch		Poly-Call (3 Position Wafer, Spring Return from "ring" Position.
M24	Switch		Transmit-PA (DPDT Slide Type)
M25	Switch		Meter, S/RF-Mod/PA (DPDT Slide Type)
M26	Tone Filter		G (2625CPS)
	Tone Filter		A (1725CPS)
	Tone Filter		B (1875CPS)
	Tone Filter		C (2025CPS) Optional Tone Filters. Order by frequency and designate letter.
	Tone Filter		D (2175CPS)
	Tone Filter		E (2325CPS)
	Tone Filter		F (2475CPS)
	Tone Filter		H (2775CPS)
	Tone Filter		I (2925CPS)
M27	Relay		Poly-Call and Controlling Circuit
M28	Meter		S/RF-Mod/PA
M29	Microphone Ass'y.		Includes Push-to-talk Switch, Cable, and Plug

WIRING DATA

General-use Hook-up Wire .... Use BELDEN No. 8530 (Solid) Available in 12 Colors
8524 (Stranded) Available in 12 Colors
Shielded Antenna Lead ..... Use BELDEN No. 8214 Lowest Loss (RG-8/U Type)
8237 Low Loss (RG-8/U)
8240 (Solid) Miniature (RG-58/U)
8259 (Stranded) Miniature (RG-58A/U)
Coiled Microphone Cable ..... Use BELDEN No. 8497 3 Conductor-1 Shielded for Press-to-Talk (Neoprene)
8496 3 Conductor-1 Shielded for Press-to-Talk (Vinyl)
Ignition Noise Suppression .... Use BELDEN No. 7300-Series Spark-Plug Sets
Bonding Strap ..... Use BELDEN No. 8661 (3/8 In.)

TRADE NAME:	Radiocom Models 27C-2A/-2B/-2C
SUPPLIER:	Maxwell Electronics Corp. 229 Garvon Street, Garland, Texas
TYPE SET:	10 Tube Transceiver
POWER SUPPLY:	110 – 120 Volts AC, 60 Cycles (or) 6 (or) 12 Volt Storage Battery
RATING:	70 Watts, .62 Amp. @117 VAC (Receive) 80 Watts, .74 Amp. @117 VAC (Transmit) 4.3 Amp. @12.6VDC (Receive)
TUNING RANGE:	Any one CB Channel 1 thru 23

ALIGNMENT INSTRUCTIONS

ALIGNMENT INSTRUCTIONS—READ CAREFULLY BEFORE ATTEMPTING ALIGNMENT

Best results will be obtained when adjusting A9 and A10 if the antenna normally used is connected and the unit is as nearly in the cabinet as possible.

RECEIVER ALIGNMENT

Use only enough generator output to provide a usable indication.
Connect DC VTVM across volume control.
Suggested Alignment Tools: GENERAL CEMENT #5097, 8727
A1 thru A4... WALSCO #2515

	SIGNAL GENERATOR	CHANNEL	ADJUST	REMARKS
1.	High side to pin 2 (grid) of Mixer, Low side to chassis. Tune to 455KC (Unmod.)	Any	A1, A2, A3, A4	Remove receiver crystal. Adjust for maximum deflection. Reinsert crystal.
2.	High side to antenna receptacle, low side to chassis. Tune to receiver freq.	"	A5, A6, A7, A8, A9	Loosen locking inserts. Adjust for maximum deflection. Tighten locking inserts being careful not to disturb cores.

TRANSMITTER ALIGNMENT

ONLY THOSE PERSONS PROPERLY LICENSED ARE PERMITTED TO MAKE REPAIRS OR ADJUSTMENTS WHICH MAY RESULT IN ILLEGAL OPERATION. (REFER TO FCC RULES & REGULATIONS PART 19. SUBPART D, SECTION 19.71)

	SPECIAL INSTRUCTIONS	INDICATOR	ADJUST	REMARKS
3.	Connect suitable load to antenna receptacle. Turn A11 core to extreme low end of coil.	RF Wattmeter or field strength meter.	A10, A11	Key Transmitter. Adjust for maximum output. Repeat adjustments until no further improvement is noticed.

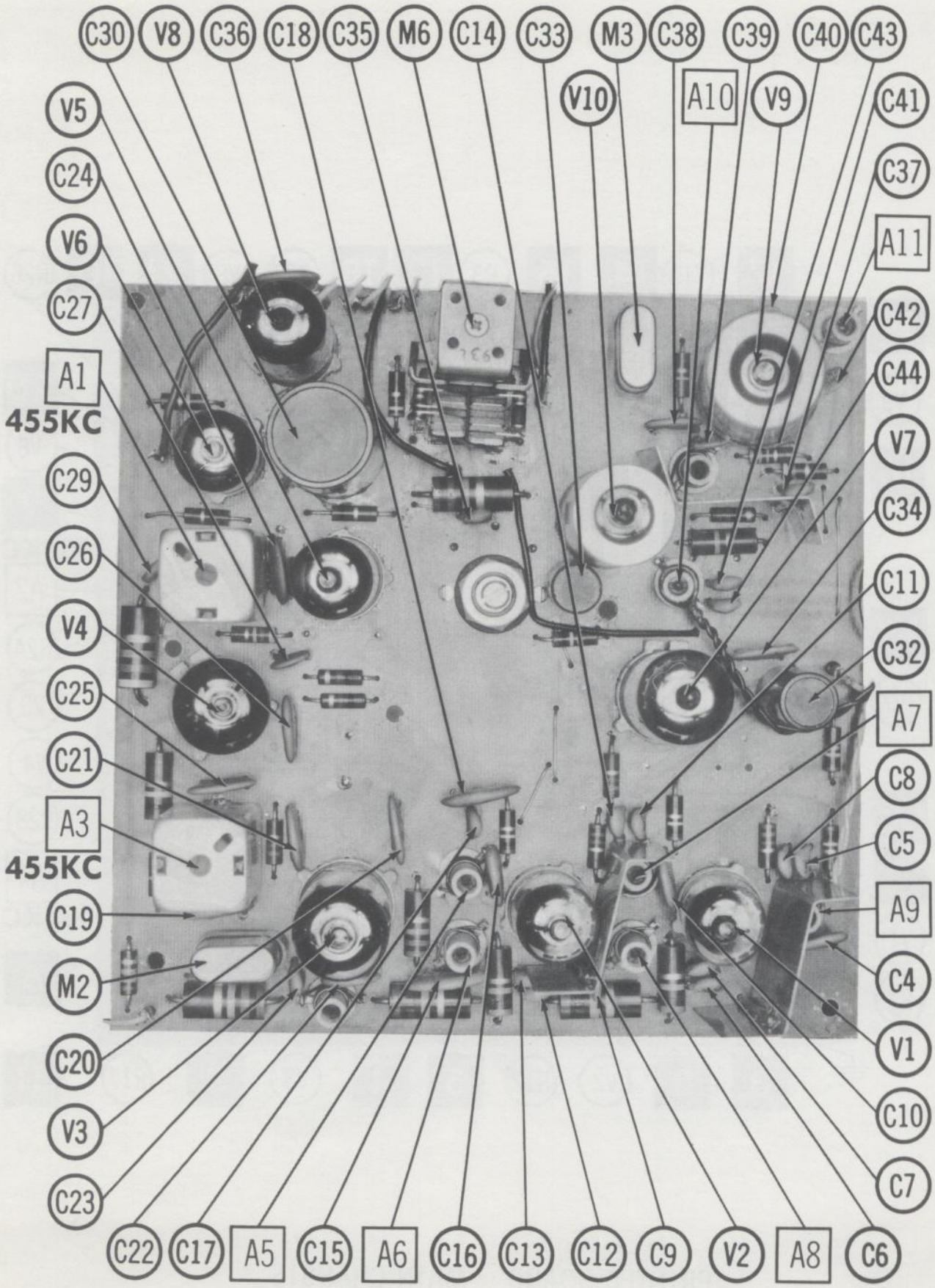

MAIN CHASSIS TOP VIEW – ALIGNMENT, CAPACITOR, TUBE & MISC. IDENT.

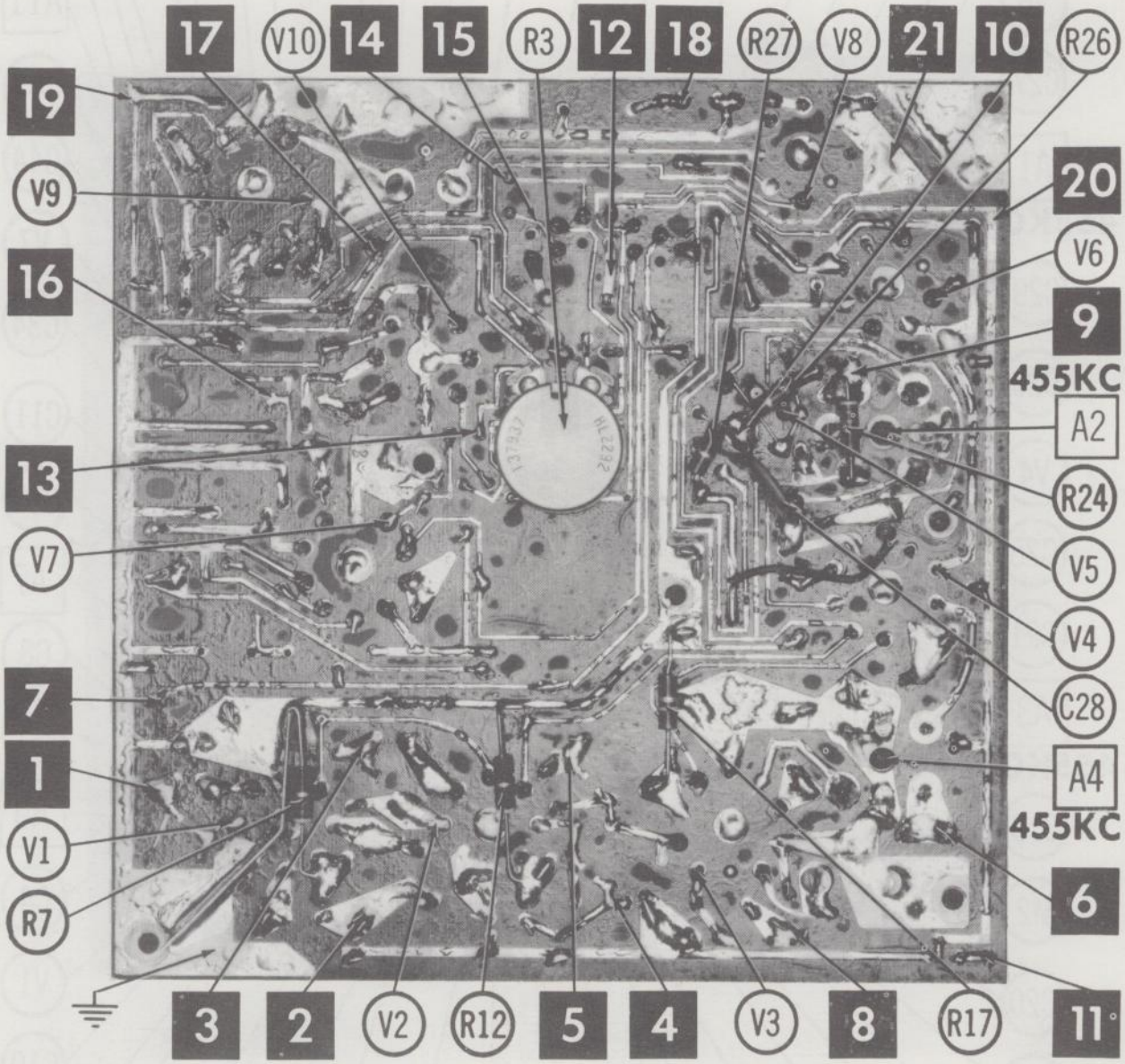

PRINTED BOARD — MAIN CHASSIS

A Howard W. Sams CIRCUITRACE® Photo

ARROWS INDICATING TUBE LOCATIONS ARE POINTING TO PIN 1 UNLESS OTHERWISE INDICATED

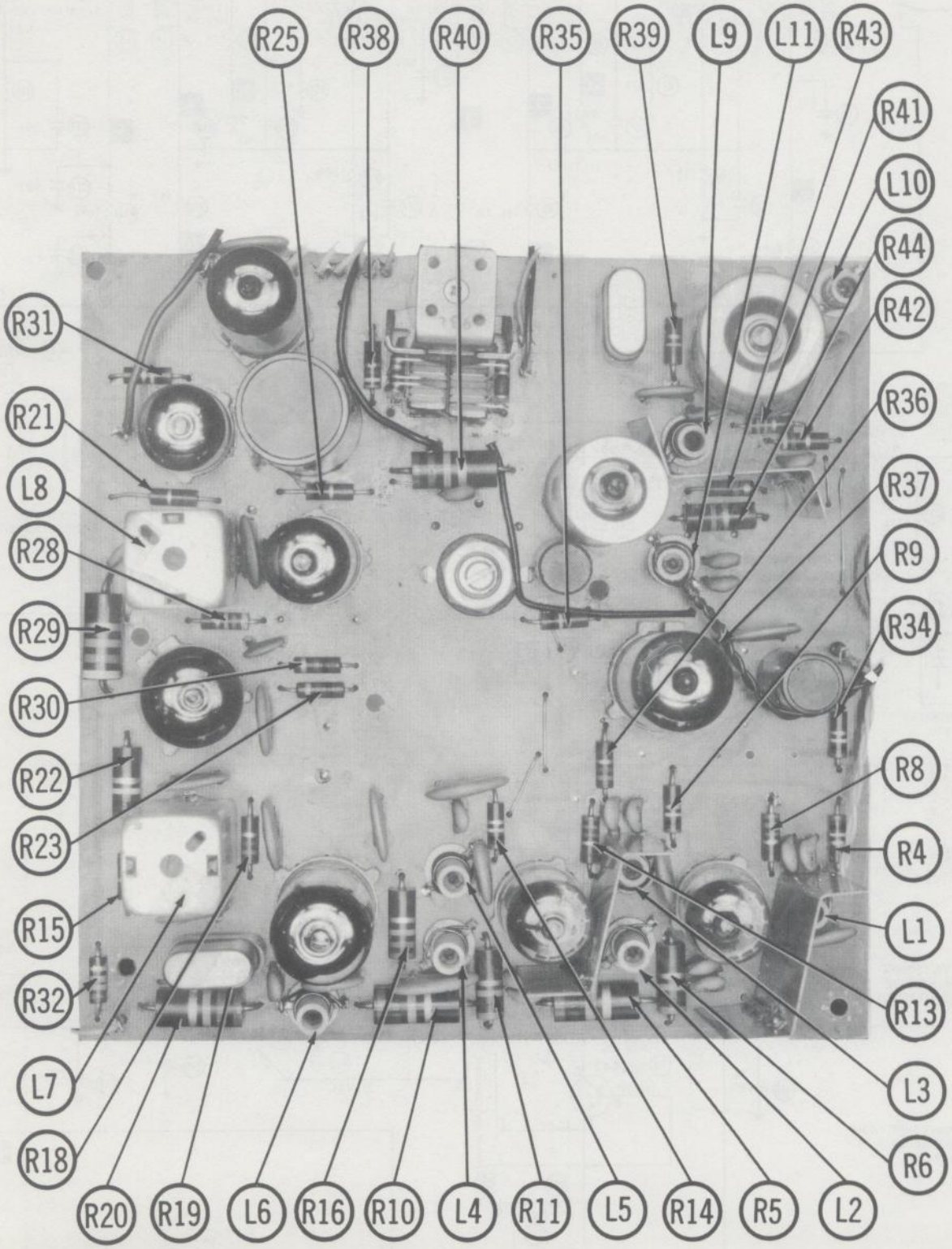

MAIN CHASSIS TOP VIEW — RESISTOR & INDUCTOR IDENT.

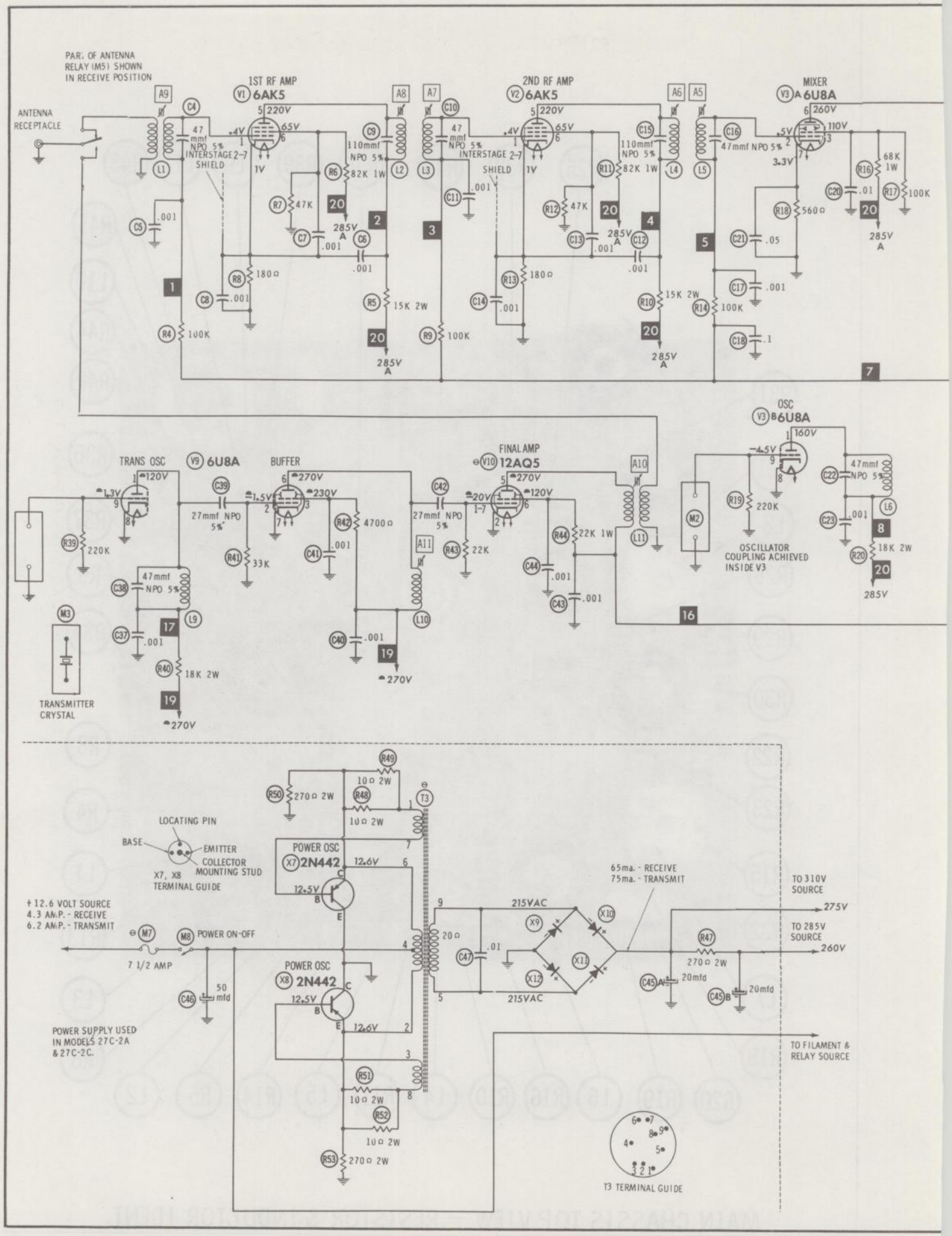
PART OF ANTENNA RELAY (M5) SHOWN IN RECEIVE POSITION
ANTENNA RECEPTACLE
1ST RF AMP
V1 6AK5
2ND RF AMP
V2 6AK5
MIXER
V3A 6U8A
INTERSTAGE 2-7 SHIELD
285V A
TRANS OSC
V9 6U8A
BUFFER
FINAL AMP
V10 12AQ5
OSC
V3B 6U8A
OSCILLATOR COUPLING ACHIEVED INSIDE V3
TRANSMITTER CRYSTAL
270V
LOCATING PIN
BASE
EMITTER
COLLECTOR
MOUNTING STUD
X7, X8 TERMINAL GUIDE
+ 12.6 VOLT SOURCE
4.3 AMP. - RECEIVE
6.2 AMP. - TRANSMIT
7 1/2 AMP
POWER ON-OFF
POWER OSC
X7 2N442
X8 2N442
POWER SUPPLY USED IN MODELS 27C-2A & 27C-2C.
215VAC
65ma. - RECEIVE
75ma. - TRANSMIT
TO 310V SOURCE
275V
TO 285V SOURCE
260V
TO FILAMENT & RELAY SOURCE
T3 TERMINAL GUIDE

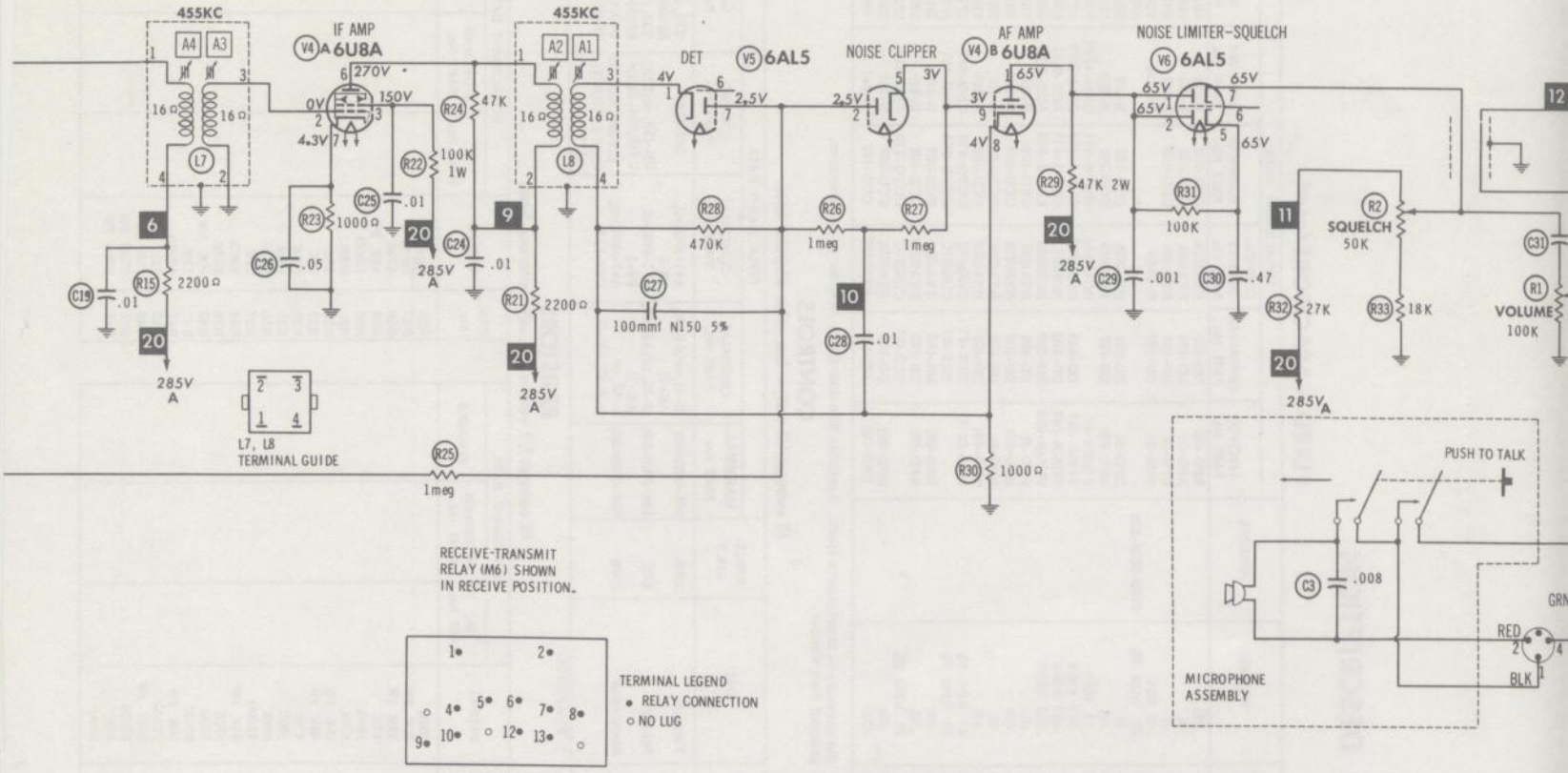

TERMINAL LEGEND
• RELAY CONNECTION
○ NO LUG

M6 TERMINAL GUIDE

RESISTANCE READINGS

ITEM	TUBE	Pin 1	Pin 2	Pin 3	Pin 4	Pin 5	Pin 6	Pin 7	Pin 8	Pin 9
V1	6AK5	1.6meg	180Ω	FIL	FIL	†15K	†82K	180Ω		
V2	6AK5	1.6meg	180Ω	FIL	FIL	†15K	†82K	180Ω		
V3	6U8A	†18K	1.6meg	100K	FIL	FIL	†2700Ω	560Ω	0Ω	220K
V4	6U8A	†47K	16Ω	†100K	FIL	FIL	†2700Ω	1000Ω	1000Ω	2.5meg
V5	6AL5	1000Ω	470K	FIL	FIL	2.5meg	NC	470K		
V6	6AL5	47K	†47K	FIL	FIL	†150K	NC	▲†47K		
V7	12AT7	†100K	▬100K 0Ω	560Ω	FIL	FIL	▬†22K	0Ω	INF	FIL
V8	6AQ5	0Ω	390Ω	FIL	FIL	†280Ω	†540Ω	0Ω		
V9	6U8A	▬†18K	33K	▬†5000Ω	FIL	FIL	▬†540Ω	0Ω	0Ω	220K
V10	12AQ5	22K	0Ω	FIL	FIL	†500Ω	†22K	22K		

ALL MEASUREMENTS TAKEN IN "RECEIVE" POSITION UNLESS OTHERWISE DESIGNATED.
▬ TAKEN IN "TRANSMIT" POSITION.
† MEASURED FROM JUNCTION OF X2 & X3.
▲ SQUELCH CONTROL AT PROPER SETTING. ALL OTHER CONTROLS AT MINIMUM.
NC NO CONNECTION
RESISTANCE MEASUREMENTS FOR X7 AND X8 NOT GIVEN BECAUSE OF THE WIDE VARIATION IN INTERNAL TRANSISTOR RESISTANCE.

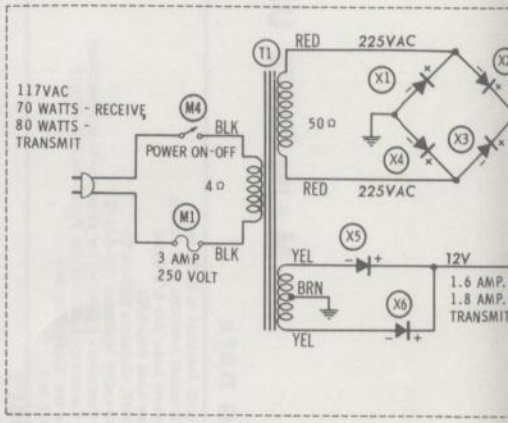

● SEE PARTS LIST FOR ALTERNATE VALUE OR APPLICATION

1. DC voltage measurements taken with vacuum tube voltmeter; AC voltages measured with 1000 ohm per volt voltmeter.
2. Socket connections are shown as bottom views.
3. Measured values are from socket pin to common ground.
4. Line voltage maintained at 117 volts for voltage readings.
5. Nominal tolerance on component values makes possible a variation of ±15% in voltage and resistance readings.
6. Volume control at maximum, no signal applied for voltage measurements.

A PHOTOFACT STANDARD NOTATION SCHEMATIC
with CIRCUITRACE

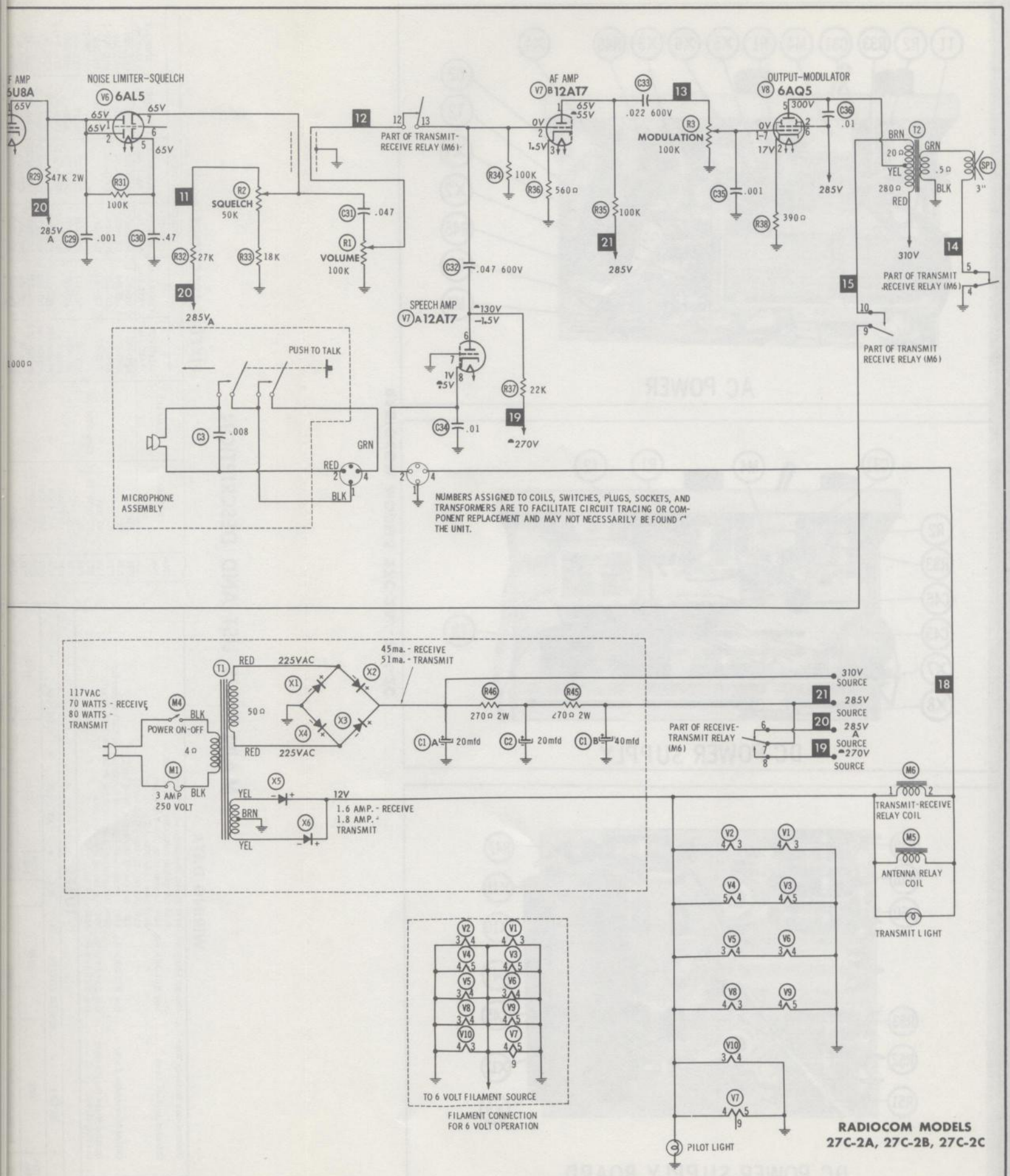

RADIOCOM MODELS 27C-2A, 27C-2B, 27C-2C

MAIN PARTS LIST AND DESCRIPTION

WIRING DATA

General-use Hook-up Wire	Use BELDEN No.	8530 (Solid) Available in 12 Colors
		8524 (Stranded) Available in 12 Colors
Shielded Antenna Lead	Use BELDEN No.	8214 Lowest Loss (RG-8/U Type)
		8237 Low Loss (RG-8/U)
		8240 (Solid) Miniature (RG-58/U)
		8259 (Stranded) Miniature (RG-58A/U)
Coiled Microphone Cable	Use BELDEN No.	8497 3 Conductor- 1 Shielded for Press-to-Talk (Neoprene)
		8496 3 Conductor- 1 Shielded for Press-to-Talk (Vinyl)
Ignition Noise Suppression	Use BELDEN No.	7300-Series Spark-Plug Sets
Bonding Strap	Use BELDEN No.	8661 (3/8 In.)

TUBES

ITEM No.	USE	TYPE (AMPEREX / GENERAL ELECTRIC / RCA / RAYTHEON / SYLVANIA)	ITEM No.	USE	TYPE (AMPEREX / GENERAL ELECTRIC / RCA / RAYTHEON / SYLVANIA)
V1	1st RF Amplifier	6AK5	V6	Noise Limiter-Squelch	6AL5
V2	2nd RF Amplifier	6AK5	V7	Speech Amp. -AF Amp.	12AT7
V3	Mixer-Osc.	6U8A	V8	Output-Modulator	6AQ5
V4	IF Amp. -AF Amp.	6U8A	V9	Trans. Osc. -Buffer	6U8A
V5	Det. -Noise Clipper	6AL5	V10	Final Amplifier	12AQ5 (6AQ5)*

* Used in Model 27C-2C.

POWER RECTIFIERS & SIGNAL DIODES

ITEM No.	CURRENT RATING (Measured)	ORIGINAL Part or Type No.	RECTIFIERS: RCA PART No.	RECTIFIERS: SARKES TARZIAN PART No.	DIODES: RAYTHEON PART No.	NOTES
X1	.051A	700-0026-001	1N3194	2F4		HV Bridge Rect. (1N270)
X2	.051A	700-0026-001	1N3194	2F4		
X3	.051A	700-0026-001	1N3194	2F4		
X4	.051A	700-0026-001	1N3194	2F4		
X5	1.6A	700-0025-001	1N2858			LV DC Rect. (1N1217)
X6	1.6A	700-0025-001	1N2858			

ELECTROLYTIC CAPACITORS

ITEM No.	RATING: CAP.	RATING: VOLT.	MAXWELL PART No.	AEROVOX PART No.	CORNELL-DUBILIER PART No.	GENERAL ELECTRIC PART No.	MALLORY PART No.	PYRAMID PART No.	SPRAGUE PART No.
C1A	20	350	301-0021-001				TCD65	TDLD-28	TVAS-2635*
B	20	350							
C2	40	350	301-0024-001	PRS1670	BR40-350	QT1-14	TC78	TD-40-350	TVA-1611

* Not normally in distributor's stock. Available thru distributor on order to manufacturer.

FIXED CAPACITORS

ITEM No.	RATING	REMARKS	AEROVOX PART No.	CENTRALAB PART No.	CORNELL-DUBILIER PART No.	ELMENCO PART No.	MALLORY PART No.	SPRAGUE PART No.
C3	.008 200V		P288N-008	DD-822	DDMS-6D8	6DP-2-802	GEM-628	6TM-D80
C4	47 NPO 5%		NPO-DI-47	DTZ-47	C10Q47C	CCTO-470	CNO-447	10TCC-Q47
C5	.001		BPD-001	DD-102	BYA10D1	CCD-102	B-210	5HK-D10
C6	.001		BPD-001	DD-102	BYA10D1	CCD-102	B-210	5HK-D10
C7	.001		BPD-001	DD-102	BYA10D1	CCD-102	B-210	5HK-D10
C8	.001		BPD-001	DD-102	BYA10D1	CCD-102	B-210	5HK-D10
C9	110 NPO 5%	#300-0004-001						
C10	47 NPO 5%		NPO-DI 47	DTZ-47	C10Q47C	CCTO-470	CNO-447	10TCC-Q47
C11	.001		BPD-001	DD-102	BYA10D1	CCD-102	B-210	5HK-D10
C12	.001		BPD-001	DD-102	BYA10D1	CCD-102	B-210	5HK-D10
C13	.001		BPD-001	DD-102	BYA10D1	CCD-102	B-210	5HK-D10
C14	.001		BPD-001	DD-102	BYA10D1	CCD-102	B-210	5HK-D10
C15	110 NPO 5%	#300-0004-001						
C16	47 NPO 5%		NPO-DI 47	DTZ-47	C10Q47C	CCTO-470	CNO-447	10TCC-Q47
C17	.001		BPD-001	DD-102	BYA10D1	CCD-102	B-210	5HK-D10
C18	.1 50V		C80V104AM	DF-104	H-05P1		TA-010	TG-P10
C19	.01		BPD-01	DD-103	BYA10S1	CCD-103	B-110	5HK-S10
C20	.01		BPD-01	DD-103	BYA10S1	CCD-103	B-110	5HK-S10
C21	.05 50V		BPD-05	DD-503	H-05S5		TA-150	TG-S50
C22	47 NPO 5%		NPO-DI 47	DTZ-47	C10Q47C	CCTO-470	CNO-447	10TCC-Q47

FIXED CAPACITORS (cont)

ITEM No.	RATING	REMARKS	AEROVOX PART No.	CENTRALAB PART No.	CORNELL-DUBILIER PART No.	ELMENCO PART No.	MALLORY PART No.	SPRAGUE PART No.
C23	.001		BPD-001	DD-102	BYA10D1	CCD-102	B-210	5HK-D10
C24	.01		BPD-01	DD-103	BYA10S1	CCD-103	B-110	5HK-S10
C25	.01		BPD-01	DD-103	BYA10S1	CCD-103	B-110	5HK-S10
C26	.05 50V		BPD-05	DD-503	H-05S5		TA-150	TG-S50
C27	100 N150 5%	#300-0003-001				*		10TCP-T10
C28	.01		BPD-01	DD-103	BYA10S1	CCD-103	B-110	5HK-S10
C29	.001		BPD-001	DD-102	BYA10D1	CCD-102	B-210	5HK-D10
C30	.47 400V		P4151N-47		BC4P47J	4DP-6-474	GEM-4047	4TM-P47
C31	.047 400V		P488N-047	DD-503	CUB4S47	4DP-3-473	GEM-6147	4TM-S47
C32	.047 600V		P6151N-047	DD-503	BC6S47J	6DP-3-473	ACE-6147	6SE-S47
C33	.022 600V		P6151N-022	DD-203	BC6S22J	6DP-2-223	ACE-6122	6SE-S22
C34	.01		BPD-01	DD-103	BYA10S1	CCD-103	B-110	5HK-S10
C35	.001		BPD-001	DD-102	BYA10D1	CCD-102	B-210	5HK-D10
C36	.01		BPD-01	DD-103	BYA10S1	CCD-103	B-110	5HK-S10
C37	.001		BPD-001	DD-102	BYA10D1	CCD-102	B-210	5HK-D10
C38	47 NPO 5%		NPO-DI 47	DTZ-47	C10Q47C	CCTO-470	CNO-447	10TCC-Q47
C39	27 NPO 5%			TCZ-27	C10Q27C	CCTO-270	CNO-427	10TCC-Q27
C40	.001		BPD-001	DD-102	BYA10D1	CCD-102	B-210	5HK-D10
C41	.001		BPD-001	DD-102	BYA10D1	CCD-102	B-210	5HK-D10
C42	27 NPO 5%			TCZ-27	C10Q27C	CCTO-270	CNO-427	10TCC-Q27
C43	.001		BPD-001	DD-102	BYA10D1	CCD-102	B-210	5HK-D10
C44	.001		BPD-001	DD-102	BYA10D1	CCD-102	B-210	5HK-D10

* Not normally in distributor's stock. Available thru distributor on order to manufacturer.
\# Maxwell Part Number.

CONTROLS

All wattages 1/2 watt, or less, unless otherwise listed.

ITEM No.	USE	RESISTANCE	MAXWELL PART No.	CENTRALAB PART No.	CLAROSTAT PART No.	CTS-IRC PART No.	MALLORY PART No.
R1	Volume	100K	406-0011-001	B-41, or(AB-41, AK-7)	A47-100K-Z, FS-3	Q13-128	U39, or(UA15A, SF1000)
R2	Squelch	50K	406-0010-001	B-32, or(AB-32, AK-7)	A47-50K-Z, FS-3	Q11-123, or(BU1, CF12, SS1, DC1)*	U33, (UA54A, SF1000)
R3	Modulation	100K	406-0009-001	B-40, or (AB-40, AK-1)	A47-100K-Z, FKS-1/2	B11-128, SK3, or (BU2, CF13, SS3, DC1)*	U39, or(UA15A, SK-1000)

* "SNAPTROL"

RESISTORS

All wattages 1/2 watt, or less, unless otherwise listed.

ITEM No.	RATING	REPLACEMENT DATA: IRC PART No.	WORKMAN PART No.	REMARKS
R4	100K			
R5	15K 2W			
R6	82K 1W			
R7	47K			
R8	180Ω			
R9	100K			
R10	15K 2W			
R11	82K 1W			
R12	47K			
R13	180Ω			
R14	100K			
R15	2200Ω			
R16	68K 1W			
R17	100K			
R18	560Ω			
R19	220K			
R20	18K 2W			
R21	2200Ω			
R22	100K 1W			
R23	1000Ω			
R24	47K			
R25	1meg			

ITEM No.	RATING	REPLACEMENT DATA: IRC PART No.	WORKMAN PART No.	REMARKS
R26	1meg			
R27	1meg			
R28	470K			
R29	47K 2W			
R30	1000Ω			
R31	100K			
R32	27K			
R33	18K			
R34	100K			
R35	100K			
R36	560Ω			
R37	22K			
R38	390Ω			
R39	220K			
R40	18K 2W			
R41	33K			
R42	4700Ω			
R43	22K			
R44	22K 1W			
R45	270Ω 2W			
R46	270Ω 2W			

MAIN PARTS LIST AND DESCRIPTION (CONTINUED)

COILS (RF-IF)

ITEM No.	USE	REPLACEMENT DATA					NOTES
		MAXWELL PART No.	Merit PART No.	Miller PART No.	Stancor PART No.	Workman PART No.	
L1	Ant.	200-6038-001					
L2	Pri. 1st RF	201-0001-001					
L3	Sec. 1st RF	201-0002-001					
L4	Pri. 2nd RF	201-0001-001					
L5	Sec. 2nd RF	201-0002-001					
L6	Receiver Osc.	201-0002-001					
L7	Input IF	200-0005-001					
L8	Output IF	200-0005-001					
L9	Osc. Plate Trans.	201-0031-001					
L10	Buffer Amp. Plate	201-0031-001					
L11	Final Amp.	201-0032-001					

TRANSFORMER (POWER)

ITEM No.	RATING			REPLACEMENT DATA					NOTES
	PRI.	SEC. 1	SEC. 2	MAXWELL PART No.	MERIT PART No.	STANCOR PART No.	THORDARSON PART No.	TRIAD PART No.	
T1	117V ⓐ .62A .74A*	225V ⓐ .045A .051A*	12V ⓐ 1.6A 1.8A*	200-0009-001					* Transmit

TRANSFORMER (AUDIO OUTPUT)

ITEM No.	IMPEDANCE		REPLACEMENT DATA					NOTES
	PRI.	SEC.	MAXWELL PART No.	Merit PART No.	Stancor PART No.	Thordarson PART No.	Triad PART No.	
T2	6750Ω Tap ⓐ 1750Ω	3-4Ω	200-0006-001					

SPEAKER

ITEM No.	TYPE			REPLACEMENT DATA		NOTES
	SIZE	FIELD	V. C. IMP.	MAXWELL PART No.	QUAM PART No.	
SP1	3"	PM	3-4Ω	202-0001-001	30A5	

FUSES

ITEM No.	TYPE	RATING	REPLACEMENT DATA					
			MAXWELL PART No.		LITTELFUSE PART No.		BUSS PART No.	
			FUSE	HOLDER	FUSE	HOLDER	FUSE	HOLDER
M1	3AG	3A 250V		600-0028-001	312003	357001	AGC 3	4405

MISCELLANEOUS

ITEM No.	PART NAME	MAXWELL PART No.	NOTES
M2	Crystal		Receive (Specify Model & Channel Desired)
M3	Crystal		Transmit (Specify Model & Channel Desired)
M4	Switch	600-0067-001	On-Off SPST Toggle Type
M5	Relay	203-0002-001	Antenna (12V)
	Relay	203-0001-001	Antenna (6V)
M6	Relay	203-0004-001	Control (12V)
	Relay	203-0003-001	Control (6V)
	Microphone	202-0002-001	

CABINETS & CABINET PARTS

(When Ordering Cabinets & Cabinet Parts, Specify Model, Chassis & Color)

NAME	PART NO.	DESCRIPTION
Knob	600-0006-001	Volume, Squelch

DC POWER SUPPLY PARTS LIST AND DESCRIPTION

TRANSISTORS

ITEM No.	ORIG. TYPE	USE	REPLACEMENT DATA			NOTES
			GENERAL ELECTRIC PART No.	RCA PART No.	RAYTHEON PART No.	
X7	2N442	Power Oscillator	GE-4			PNP
X8	2N442	Power Oscillator	GE-4			PNP

POWER RECTIFIERS & SIGNAL DIODES

ITEM No.	CURRENT RATING (Measured)	ORIGINAL Part or Type No.	RECTIFIERS		DIODES	NOTES
			RCA PART No.	SARKES TARZIAN PART No.	RAYTHEON PART No.	
X9	.075A	700-0026-001	1N3194	2F4		HV Bridge Rectifier (1N2070)
X10	.075A	700-0026-001	1N3194	2F4		
X11	.075A	700-0026-001	1N3194	2F4		
X12	.075A	700-0026-001	1N3194	2F4		

ELECTROLYTIC CAPACITORS

ITEM No.	RATING		REPLACEMENT DATA						
	CAP.	VOLT.	MAXWELL PART No.	AEROVOX PART No.	CORNELL-DUBILIER PART No.	GENERAL ELECTRIC PART No.	MALLORY PART No.	PYRAMID PART No.	SPRAGUE PART No.
C45A	20	350	301-0021-001				TCD65	TDLD-28	
B	20	350							
C46	50	15	301-0023-001	PRS1265	BR50-25	QT1-15	TC29	TD-50-25	TVA-1206

FIXED CAPACITORS

ITEM No.	RATING	REMARKS	REPLACEMENT DATA					
			AEROVOX PART No.	CENTRALAB PART No.	CORNELL-DUBILIER PART No.	ELMENCO PART No.	MALLORY PART No.	SPRAGUE PART No.
C47	.01		BPD-01	DD-103	BYA105I	CCD-103	B-110	5HK-S10

RESISTORS

All wattages 1/2 watt, or less, unless otherwise listed.

ITEM No.	RATING	REPLACEMENT DATA		
		IRC PART No.	WORKMAN PART No.	REMARKS
R47	270Ω 2W			
R48	10Ω 2W			
R49	10Ω 2W			
R50	270Ω 2W			

ITEM No.	RATING	REPLACEMENT DATA		
		IRC PART No.	WORKMAN PART No.	REMARKS
R51	10Ω 2W			
R52	10Ω 2W			
R53	270Ω 2W			

TRANSFORMER (POWER)

ITEM No.	RATING			REPLACEMENT DATA					NOTES
	PRI.	SEC. 1	SEC. 2	MAXWELL PART No.	MERIT PART No.	STANCOR PART No.	THORDARSON PART No.	TRIAD PART No.	
T3	17.5VAC ⓐ 2.2A CT	2VAC ⓐ .2A	2VAC ⓐ .2A	200-0003-001 ①					① Part #200-0002-001 used in 6 Volt versions. * Transmit
	SEC. 3								
	215V ⓐ .065A (.075A)*								

FUSES

ITEM No.	TYPE	RATING	REPLACEMENT DATA					
			MAXWELL PART No.		LITTELFUSE PART No.		BUSS PART No.	
			FUSE	HOLDER	FUSE	HOLDER	FUSE	HOLDER
M7	SFE	7½A	①	600-0038-001	30707.5	155009	SFE 7½	HRE
	SFE	14A	②	600-0038-001	307014	155014	SFE 14	HRI

① 12 Volt DC Versions. ② 6 Volt DC Versions.

MISCELLANEOUS

ITEM No.	PART NAME	MAXWELL PART No.	NOTES
M8	Switch	600-0067-001	Power On-Off (Toggle Type)

INDEX

This index lists all radios appearing in "Citizens Band Manual" Volumes 1 thru 3 and "PHOTOFACT CB Radio Series" Volume 4.

PHOTOFACT® SPECIALIZED SERIES

AUTO RADIO SERIES

Complete and up-to-date PHOTOFACT® coverage of Auto Radios and Tape Players. Regular price $3.50 per volume—**only $3.20 when purchased on a Standing Order Subscription! Sign up and save 30¢ per volume.**

CB RADIO SERIES

Five to six volumes issued yearly provides complete PHOTOFACT® coverage of all popular CB Radio models. Regular price $3.50 per volume—**only $3.20 when purchased on a Standing Order Subscription! Sign up and save 30¢ per volume.**

TAPE RECORDER SERIES

Complete PHOTOFACT® coverage of all important late-model Tape Recorders in easy-to-use volumes. Regular price **$5.25** per volume—**only $4.95 when purchased on a Standing Order Subscription! Sign up and save 30¢ per volume.**

HOWARD W. SAMS & CO., INC.

PHOTOFACT® SPECIALIZED SERIES

are available from your local parts distributor

$3.50
$4.40 IN CANADA
CB-4
06055