A Howard W. Sams® PHOTOFACT PUBLICATION • CB-3

Howard W. Sams

CITIZENS BAND RADIO MANUAL

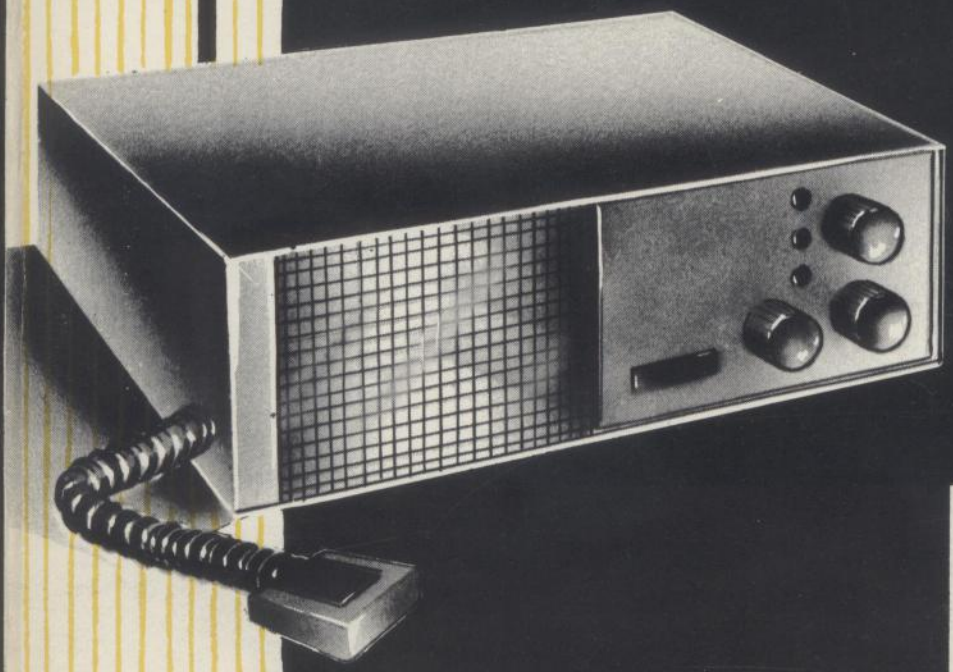

VOLUME 3

Complete PHOTOFACT® service data for 34 popular models . . . plus a special text section on CB radio and the service technician.

VOL. 3
H. W. Sams CITIZENS BAND RADIO MANUAL
CB 3

$3.50
$4.40 IN CANADA
Cat. No. CB-3

CITIZENS BAND RADIO MANUAL

VOLUME 3

by

The Howard W. Sams Engineering Staff

HOWARD W. SAMS & CO., INC.
THE BOBBS-MERRILL COMPANY, INC.
Indianapolis • New York

FIRST EDITION

FIRST PRINTING — FEBRUARY, 1963
SECOND PRINTING — MAY, 1964
THIRD PRINTING — APRIL, 1965
FOURTH PRINTING—APRIL, 1968
FIFTH PRINTING—NOVEMBER, 1970
SIXTH PRINTING—MARCH, 1973
SEVENTH PRINTING—MAY, 1974
EIGHTH PRINTING—MARCH, 1975
NINTH PRINTING—JANUARY, 1976
TENTH PRINTING—MAY, 1976

CITIZENS BAND RADIO MANUAL, VOL. 3

Library of Congress Catalog Card Number: 61-18464

PREFACE

Citizens-band radio is a rapidly growing field, not only in sales but also from the servicing standpoint. As of this writing, there are approximately 400,000 licensed CB'ers in the United States. Many are buying not just one or two pieces of equipment, but enough to equip an entire fleet of cars or trucks. It doesn't take much imagination to understand that there is a demand for additional servicing facilities for this type of equipment and that a potential opportunity awaits the enterprising service technician.

Before the technician can service CB radio, however, he must thoroughly understand the type of equipment he will be called on to service. Further, there are certain conditions of installation and repair which must satisfy not only the customer, but the FCC as well.

The purpose of this book is to provide the needed service information for several of the most popular CB units. A text section at the beginning describes the servicing potential and provides a brief look at some of the problems associated with this type of two-way radio equipment. Some of the more common transceiver troubles are discussed together with recommended troubleshooting procedures to locate and correct the cause, with the least amount of time and effort. Complete PHOTOFACT schematics covering widely used CB transceivers are included to make your servicing of CB equipment faster, easier, and more profitable.

January, 1963

TABLE OF CONTENTS

• COVERING THESE UNITS •

INDEX

This index lists all Citizens-band units appearing in Volumes 1 through 3 of "Citizens Band Radio Manual."

INDEX

This Index lists all Citizens-band units appearing in Volumes 1 through 8 of "Citizens Band Radio Manual."

CB RADIO AND THE SERVICE TECHNICIAN

With the advent of the Citizens Radio Service, an entirely new field of electronics servicing has been opened to those who are properly qualified. Although this service was originally introduced to the public back in 1949, it was not until September of 1958 (when the Class-D Service was initiated) that CB radio really became practical as a means of providing the personal two-way radiocommunications for which is was intended. Since that time, CB radio has been growing by leaps and bounds until it has become what is probably the most popular radio service in existence. As an example of its growth, let's make a simple comparison between CB and amateur radio. At present there are approximately 252,000 licensed hams in the United States as compared with nearly 400,000 CB'ers (Fig. 1). Even more significant is the fact that amateur radio has been in existence over 50 years, while Citizens band radio is still in its infancy. Moreover, CB is continuing to grow at a very rapid pace; the FCC has been receiving approximately 10,000 license applications each month.

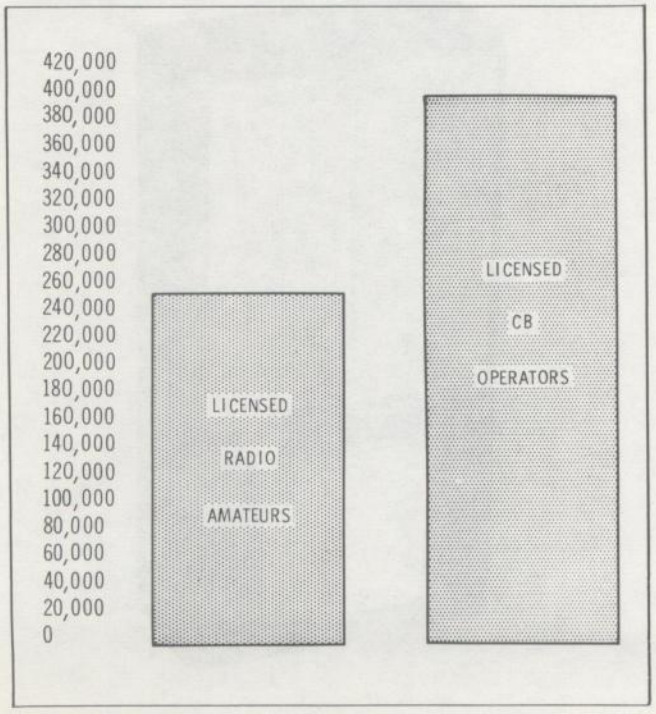

Fig. 1. Graph showing the relationship between the number of licensed radio amateurs and CB'ers.

As you probably already know, there are four classes of CB radio, namely *A*, *B*, *C*, and *D*. Each class is designed to fill a particular need and is governed by the regulations set forth in Part 19, Volume VI of the FCC (Federal Communications Commission) Rules and Regulations. Among other things, these regulations stipulate the manner in which the service is to be used and the technical requirements of the radio equipment for each class of operation.

SERVICING REGULATIONS

The rapid growth of CB radio has resulted in a need for additional servicing facilities for this type of two-way radio equipment. This represents almost unlimited opportunities for the ambitious radio and television technician who wishes to expand his business and subsequently increase profits by servicing CB two-way radio. There are, however, certain FCC regulations which prevent just anyone from servicing CB gear. Obviously, if this were permitted, there would be chaos on the CB bands (and undoubtedly on many of the commercial bands as well) as the result of off-frequency operation, spurious radiations, overmodulation, etc. To preclude such problems, Part 19 of the FCC regulations prohibits anyone except the holder of a valid first- or second-class commercial radiotelephone license from making any repairs or adjustments which could cause improper (illegal) operation. Even though a person has the ability to repair and adjust such equipment *properly*, he must have an appropriate commercial license before he can perform this service *legally*. In radio and television servicing, the technician strives to satisfy the customer. However, in servicing CB two-way radio, the

technician must satisfy not only the customer, but the FCC as well.

There is one exception to the servicing rule. An unlicensed person may make repairs or adjustments on a piece of two-way gear, providing such repairs are performed under the *direct* supervision of someone holding a valid first- or second-class commercial radiotelephone license. The licensee, of course, then assumes all responsibility for operation of the radio equipment after the repairs are made. At first it would appear that this regulation would limit the construction of CB equipment available in kit form, and it does to some extent. In order to conform to these regulations, kit manufacturers have made certain that

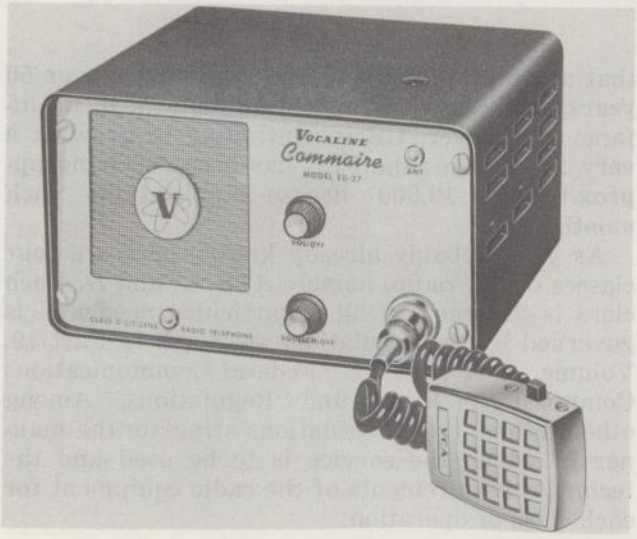

Courtesy Vocaline Company of America

Fig. 2. Vocaline Model ED-27 Class-D transceiver.

all critical circuits, such as the transmitter oscillator, frequency multiplication stages, etc., are preassembled and tuned at the factory. All adjustments are sealed at this time, and the manufacturer assumes the responsibility of proper circuit operation. If the seal on one of these adjustments is broken after the CB kit is assembled, the manufacturer no longer assumes this responsibility.

Approximately two thirds of all CB equipment now in operation is of the Class-D variety. Since a transmitter power input of 5 watts is all that is permitted in this class of operation, the radio equipment is generally of the transceiver design. A transceiver has both transmitting and receiving circuits incorporated on a single chassis with one or more circuits common to both sections. The FCC regulations regarding the license requirements for servicing are directed primarily toward the repair and adjustment of transmitters. The FCC is not concerned with receiver circuits, except those in transceivers which are common to transmitter and receiver operation. Therefore a person who is not qualified to repair or adjust transmitters should not attempt to service transceivers. It is best to adopt a "hands off" policy on all CB equipment until you obtain the proper FCC license.

CB EQUIPMENT

The CB equipment which the technician will be called on to service will appear in a number of forms. The majority of units, of course, will be Class-D transceivers. These vary in size from the table model shown in Fig. 2, to the hand-held type in Fig. 3. The smaller transceivers of the walkie-talkie variety generally employ transistors throughout their circuitry and operate with a transmitter power input of less than 2 watts; in many instances even 100 millwatts or less. No FCC license is required with equipment operating in this power range, providing it is used to communicate with similar unlicensed equipment. The larger transceivers usually operate with the maximum 5 watts plate-power input permitted by the FCC and use vacuum tubes in their circuitry. Some of these units, particularly those that can be used in mobile operation, employ transistorized power supplies to keep power consumption at a minimum.

To service CB two-way radio efficiently, the service technician must have considerable knowledge of vacuum-tube circuits and how they function in transmitters, receivers, power supplies, and special accessory equipment, such as power inverters, transverters, tone-coded squelch and selective calling systems, etc. It is also imperative that the service technician have a general knowl-

Fig. 3. Lafayette Model HE-29A all-transistor, portable, CB transceiver.

edge of transistors and how they perform in the various stages. Transistor circuits are quite different from vacuum-tube stages and require special servicing techniques. You can get by with a lot more in vacuum-tube equipment than you can in transistorized units. For example, transistors can be ruined quite easily by indiscriminate probing in the circuit, or for that matter, by taking resistance readings with the wrong ohmmeter. In this type of CB equipment the transistors and their associated components have relatively low voltage ratings. Some ohmmeters are designed to operate with enough voltage at the test leads to damage or even ruin these delicate circuit components. Thus, a certain amount of caution must be exercised when servicing this type of gear.

The printed circuit board is another item that requires special consideration, but most radio and television service technicians will already be familiar with these since they are used in the majority of present-day entertainment receivers.

SHOP FACILITIES

If you are a radio or TV technician planning on going into the CB servicing business, there will be several changes and additions required in your shop. First of all you will need sufficient space to work on the equipment as well as storage space for units to be repaired and those which have been repaired. Also, in addition to the usual test equipment found in most radio and TV shops you will need, among other things, a wattmeter for checking the RF power output of transmitters, some type of field-strength meter, a dummy load to replace the antenna while tests and repairs are being made, and an accurate signal generator (preferably crystal-controlled and with a calibrated attenuator) for checking receiver sensitivity and troubleshooting. Other instruments which are helpful in maintaining CB equipment include a frequency meter, grid-dip oscillator, and some type of device for checking the percentage of modulation. The average shop will already have such things as a VTVM or VOM, general purpose tube tester, and a standard signal generator.

The type and amount of test instruments required will depend largely on the volume of business contemplated and the kind of CB equipment to be serviced. For example, if you intend to service only Class-D transceivers you will be able to get by with less test equipment than would be needed for servicing all classes of CB gear. Since two-way radio equipment designed for Class-A and -B service operates in the UHF spectrum, it generally requires additional and more elaborate test instruments for servicing.

The average VTVM or a VOM with at least 20,000 ohms-per-volt sensitivity can be used for circuit measurements and as a basic tool for troubleshooting in CB equipment. A tube tester will also prove helpful in many instances. A mutual-conductance tube tester is preferable but a dynamic- or emission-type checker will suffice for general purposes. You will need some kind of CB antenna (an omnidirectional ground plane will do fine) to make a "final checkout" of equipment on the bench, and it will be necessary to provide a primary source of DC power for checking DC and AC/DC transceivers. (The majority of Class-D Citizens band units have a two-way power supply which will operate from either AC or DC. An automobile storage battery can be used to supply DC; however, with this arrangement it will also be necessary to provide a battery charger. Better still is one of the commercial 6/12 volt filtered DC supplies such as the type shown in Fig. 4. This supply should be capable of delivering sufficient current (10 amperes continuous and 20 amperes intermittent) and should have a means of varying the 6- and 12-volt output above and below these values.

The wattmeter can be any one of several types. Some meters indicate the exact output of the transmitter in watts. Other less expensive meters merely give a relative indication of the output power. There are two basic kinds of wattmeters. One is an in-line type and the second is known as a terminating wattmeter. Before describing these meters it should be pointed out that when checking transmitter operation, the RF output should be connected to a suitable dummy load rather than the antenna whenever possible. This will prevent

Fig. 4. Typical, filtered, DC power supply.

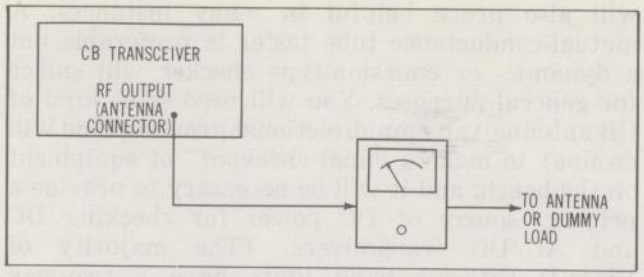

(A) In-line wattmeter.

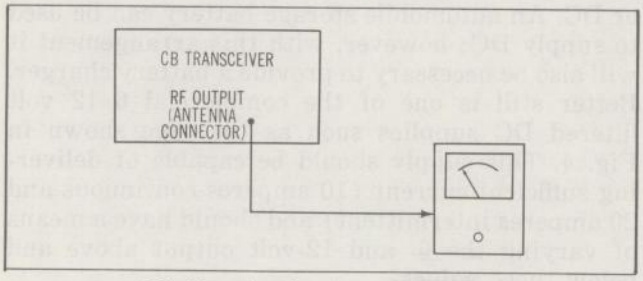

(B) Terminating-type wattmeter.

Fig. 5. Methods of connecting wattmeters to check transmitter output power.

undue interference to other stations operating on the same channel. Obviously, there will be instances where the signal *must* be fed to the antenna for testing purposes, but "on the air" testing should be kept at a minimum. The in-line wattmeter, as its name implies, is connected in series with the transmission line between the transmitter output connector and the antenna (Fig. 5A). If the antenna is not used as the load, the wattmeter must be terminated with a dummy load, such as the one shown in Fig. 6. The dummy load, also referred to as dummy antenna, must have the proper impedance (generally 50 to 52 ohms), otherwise the transmitter will not load properly. Failure to provide a load for the transmitter can cause the final RF amplifier to be damaged or ruined by excessive plate current. The terminating-type wattmeter connects directly to the RF output connector of the transmitter (Fig. 5B). Here, the wattmeter itself serves as the terminating load and must, therefore, present the proper impedance to the transmitter. Either type of wattmeter can be used; however, the series (in-line) unit does provide somewhat more versatility.

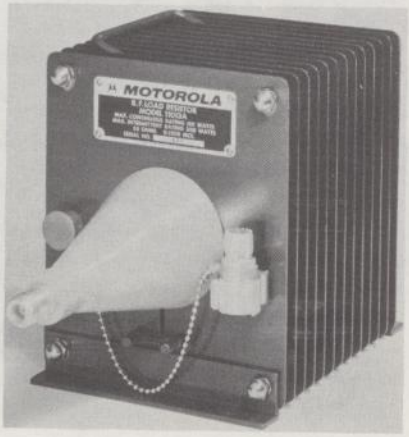

Courtesy Motorola

Fig. 6. A typical 50-ohm commercial dummy load.

An RF field-strength meter can also be a useful tool in servicing CB radio equipment. It does not have to be too elaborate, but it should be fairly sensitive. A field-strength meter provides a quick way of checking to determine whether or not a transmitter is radiating RF energy and approximately how much. The meter does not have to be connected to the transmitter; instead, the signal from the transmitter is induced in a small antenna on the unit itself. The signal is then rectified and fed directly to the meter to provide a relative indication of the strength of the incoming signal.

As mentioned previously, the type of signal generator you will require depends on the radio equipment you intend to service. In any event, the RF generator must be stable as well as accurate. It is also essential that the CB service shop have some type of instrument on hand which will accurately check transmitter frequency. Here again, the word accuracy is stressed. Since transmitters in Class-D operation must operate with a frequency tolerance no greater than .005%, it stands to reason that the meter used to check their frequency must have even less tolerance. If you intend to service Class-A CB equipment, the frequency meter must have a frequency tolerance considerably less than .001%.

In addition to the aforementioned test equipment, the service technician should have an adequate supply of replacement parts in stock. The smaller CB service shops generally stock only those parts which are needed most; the rest they purchase from their local distributor as needed. Actually, the amount of components you stock should be governed by the volume of service work performed. It certainly would not be practical, especially in a small business, to tie up too much capital in parts which may set idly on the shelves for months.

The majority of radio and TV service shops already have a pretty good supply of tubes on hand. It may be necessary, however, to expand this stock to include several additional tube types which are used quite frequently in CB radio equipment. Your stock should also include such things as 6- and 12-volt vibrators, line fuses, interference suppression devices, and possibly an assortment of crystals. The resistors, capacitors, and other components normally stocked in service shops will take care of the usual circuit defects. Relays and the like are generally more specialized devices and for this reason are usually purchased as needed. There is no set rule as to what you should or should not buy; actually, the needs of every service shop will vary. After a short time in the two-way radio business, you will have a much better idea of your needs.

SERVICE HINTS

Servicing CB radio is actually no more difficult than repairing a household radio or TV set—in fact, in many instances you will find it easier. Like any other repair job though, much time and effort can be saved by following a few simple rules.

For example, always make sure that the radio equipment in question is actually defective before you begin "digging in." Always confirm the complaint yourself. Sometimes the customer can be of help in determining the trouble by describing the symptoms. However, you cannot always base your conclusions on the symptoms he describes. You must remember that a CB licensee is not required to have any technical knowledge of electronics, and while some are quite gifted in this respect, there are many who know little or nothing about the subject.

Initial tests should be made under the same operating conditions in which the trouble was first noticed. In other words, if a Class-D transceiver installed in an automobile operated improperly only when the engine was idling, the trouble symptoms should be confirmed before the transceiver is removed from the car. In the case of mobile equipment, this type of check can be made with little inconvenience to the technician, since a car or truck can be driven to the shop. However, it is not always practical to make such tests with base stations, unless you plan on servicing in the field. Nevertheless, on the spot checks are helpful and often reveal trouble in the intercabling, automotive electrical, or antenna systems, rather than the radio equipment itself. In some instances where the transceiver is at fault, repairs can still be made without having to remove the unit. Anytime such repairs become too involved, you will probably save much time and effort by removing the unit and correcting the trouble on the bench.

After gaining access to the radio equipment, the normal troubleshooting methods can be used to isolate the defective section, stage, and component. Troubles which affect both transmitter and receiver operation are generally traced to circuits which are common to both modes. Also, remember that tubes can cause just about any type of trouble normally encountered in CB equipment. When a tube is suspected as the culprit, it is best to check it by substituting another that is known to be good. Although the substitution method is recommended, a tube checker is often helpful in confirming your suspicions. These instruments may indicate that a bad tube is good; but when they show that a tube is bad, you can be reasonably sure that it is. The majority of tube checkers provide fairly reliable readings of emission or transconductance, as well as indicating shorts and leakage between tube elements.

If the transceiver is of the AC-DC type, check it out in both modes of operation. If, for example, a piece of equipment blows fuses when operating from either an AC or DC voltage source, the trouble is in the transceiver circuits themselves, or in some component of the power supply common to both AC and DC operation. On the other hand, if the equipment blows fuses only on DC or AC operation, the defective component can usually be traced to that section of the power supply in operation at the time.

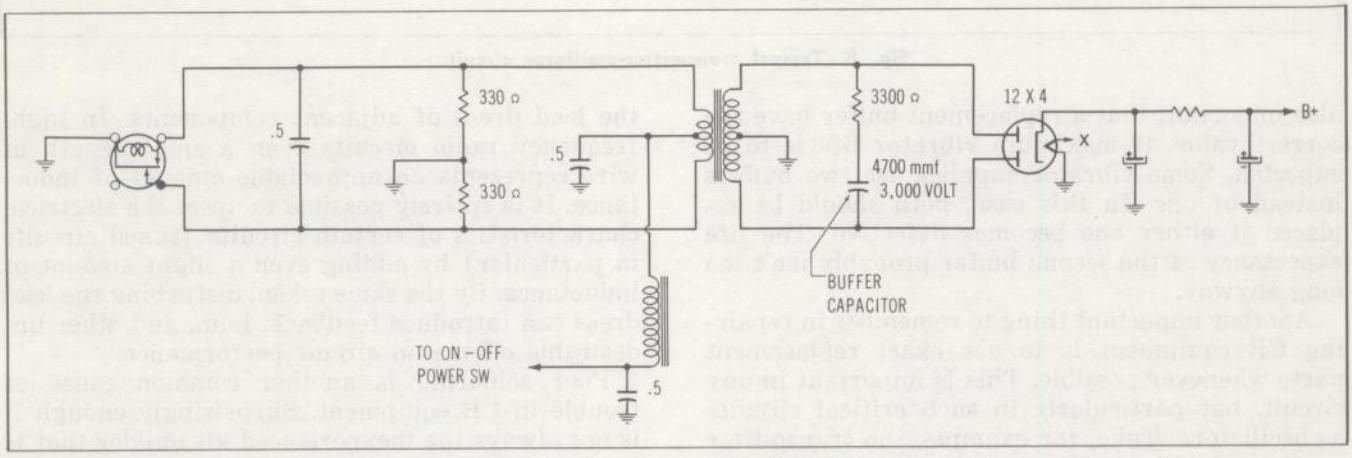

Fig. 7. Vibrator power-supply circuit.

In DC power supplies using vibrators, a common cause of fuse blowing is defective buffer capacitors. Fig. 7 shows the location of the buffer capacitor in the circuit. Should the buffer develop excessive leakage or a short, it will cause excessive current to be drawn through the vibrator contacts. If this condition is not corrected immediately, it can ruin the vibrator. Therefore, always check the fuse to make sure it has the proper rating. Quite often someone will merely replace a blown fuse with one of a higher rating. In fact, a good policy to follow when making power supply repairs is never replace a vibrator without replacing the buffer capacitor, and never replace a buffer without checking the vibrator. Many manufacturers stipulate that the guarantee on their vibrators is void unless the buffer capacitor is checked before the new vibrator is installed. It is

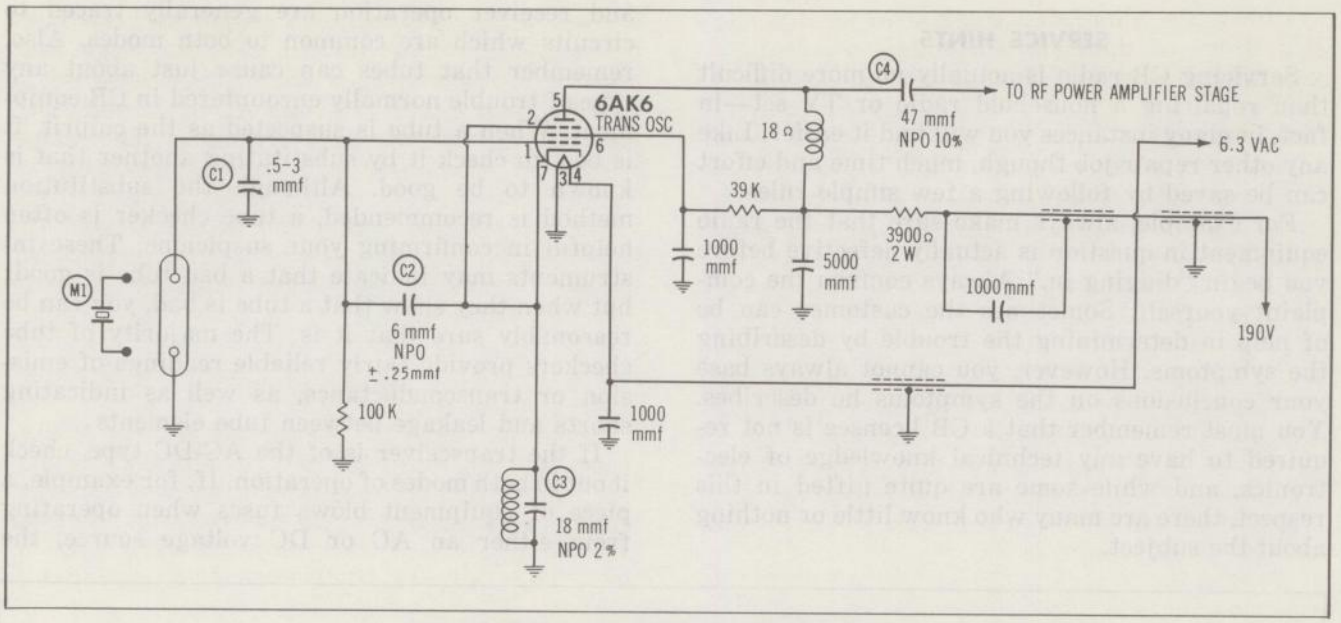

Fig. 8. Typical transmitter-oscillator circuit.

also important that a replacement buffer have the correct value, if maximum vibrator life is to be expected. Some vibrator supplies use two buffers instead of one. In this case, both should be replaced if either one becomes defective. The life expectancy of the second buffer probably isn't too long anyway.

Another important thing to remember in repairing CB equipment is to use exact replacement parts whenever possible. This is important in any circuit, but particularly in such critical circuits as oscillators. Take, for example, the transmitter oscillator in Fig. 8. The fact that this oscillator is crystal-controlled does not mean that it cannot operate off frequency. There are several things that can change the operating frequency. Seldom will you find a crystal that will operate on the exact frequency for which it was cut when it is placed in the circuit. Thus, to compensate for any slight variations, a trimmer capacitor (C8) is connected across the crystal. Adjustment of this trimmer permits the operating frequency of the oscillator to be corrected. Readjustment of C1 is usually required when the oscillator tube is replaced or as the circuit components age. Crystals themselves can become defective and cause off-frequency operation; the effects of temperature on circuit components also have considerable influence on the operating frequency. Generally, a number of temperature compensated components are employed in oscillator circuits to offset these effects. C2, C3, and C4 in Fig. 7 are temperature compensated and should be replaced only with components of the same ratings.

Another helpful suggestion for replacing defective components in CB radio, or for that matter any type of radio equipment, is to keep all leads as short as possible and do not unnecessarily disturb the lead dress of adjacent components. In high-frequency radio circuits even a small length of wire represents an appreciable amount of inductance. It is entirely possible to upset the electrical characteristics of certain circuits (tuned circuits in particular) by adding even a slight amount of inductance. By the same token, disturbing the lead dress can introduce feedback, hum, and other undesirable effects on circuit performance.

Poor soldering is another common cause of trouble in CB equipment. Surprisingly enough it is not always the inexperienced kit builder that is guilty of such practice. There are quite a few experienced service technicians who still haven't learned how to solder a connection properly. Avoid using too much solder when replacing components and above all apply sufficient heat. Nothing is worse to track down than an intermittent trouble caused by a cold solder joint.

You should also use extreme care in working with transistorized radio equipment and printed circuit boards. Since printed boards are easily damaged, make sure your suspicions are confirmed about any component before removing it from the circuit. Always use a small-wattage soldering iron to prevent damage caused by excessive heat. Transistors, as well as semiconductor diodes, are also easily damaged or ruined by excessive heat. Therefore, when soldering the leads of a transistor or diode, use as little heat as possible to make a good connection. A pair of long-nose pliers make an ideal heat sink by grasping the lead at some point between the soldering iron and the body of the transistor or diode.

As mentioned previously, you should also make it a practice not to indiscriminately probe around or ground connections in this type of radio equipment; circuit components could be damaged. Be

careful of the ohmmeter you use in locating defects; some of these have a voltage source that exceeds the ratings of transistors and capacitors.

Final Checkout

As a part of every service job the technician should make a thorough check of transmitter and receiver performance after repairs have been made. This should include a check of receiver and squelch (if employed) sensitivity, transmitter power input and output, modulation, and operating frequency. If receiver alignment or transmitter adjustment is dictated, it should be performed with accuracy. Since the signals we are dealing with are relatively weak anyway, it is imperative that the radio equipment be properly aligned if maximum efficiency is to be obtained.

You will also find that it is good practice to clean relay contacts, repair poorly soldered joints, replace weak tubes, or any other service that might preclude trouble. In this way you will be doing the customer and yourself a favor. Before releasing the set to the customer you should also check its performance under various source-voltage conditions. For example, if the unit is designed to operate from either 110-volts AC or 12-volts DC, see if it will operate properly under the voltage variations encountered in normal operation. A *Variac* can be used to check AC operation between 90 and 125 volts, and an adjustable DC power supply similar to that described earlier can be used to vary the DC source voltage between 10 and 14.5 volts.

SCHEMATICS

As an aid to the service technician, the following section is comprised of PHOTOFACT servicing information on 34 current models of CB radio equipment. Included in this coverage are complete schematics together with parts lists and replacement data, tube and component layout and identification, and alignment instructions.

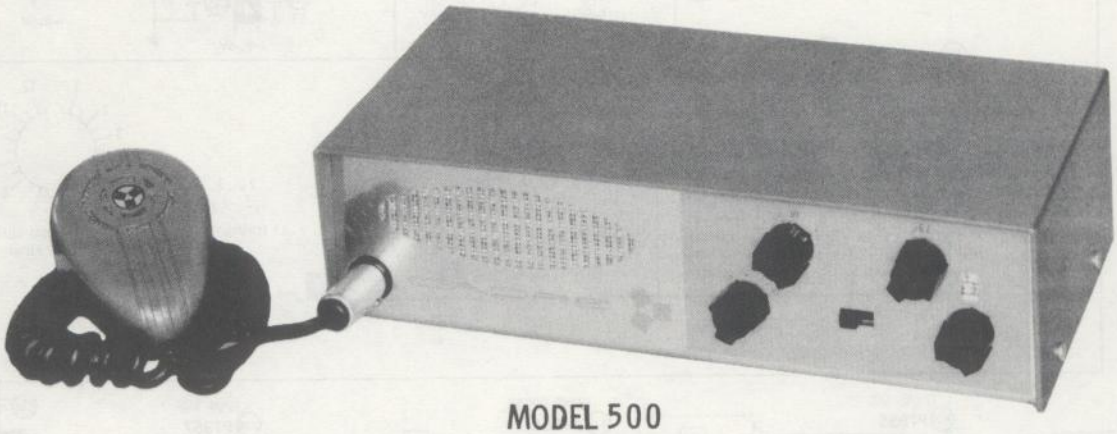

MODEL 500

CADRE MODELS
500, 500-C

TRADE NAME	Cadre Models 500, 500-C (Serial #4000 and Higher)
MANUFACTURER	Cadre Industries Corp.
TYPE SET	AC-Battery Operated 18 Transistor Portable Citizens Band Transmitter-Receiver
POWER SUPPLY	110 – 120 Volts AC, 60 Cycles (or) 12 Volt Storage Battery
RATING	RECEIVE : 5 Watts, .8 Amp. @117 Volts AC (or) .19 Amp. @12 Volts DC
	TRANSMIT: 14 Watts, .21 Amp. @117 Volts AC (or) .72 Amp. @12 Volts DC
TUNING RANGE	Any 5 Citizens Band Channels 1 thru 22. Receiver may be manually tuned.

NOTICE

ONLY THOSE PERSONS PROPERLY LICENSED ARE PERMITTED TO MAKE REPAIRS OR ADJUSTMENTS WHICH MAY RESULT IN ILLEGAL OPERATION. (REFER TO FCC RULES & REGULATIONS PART 19, SUBPART D, SECTION 19.71.)

HOWARD W. SAMS & CO., INC. Indianapolis 6, Indiana

LY645

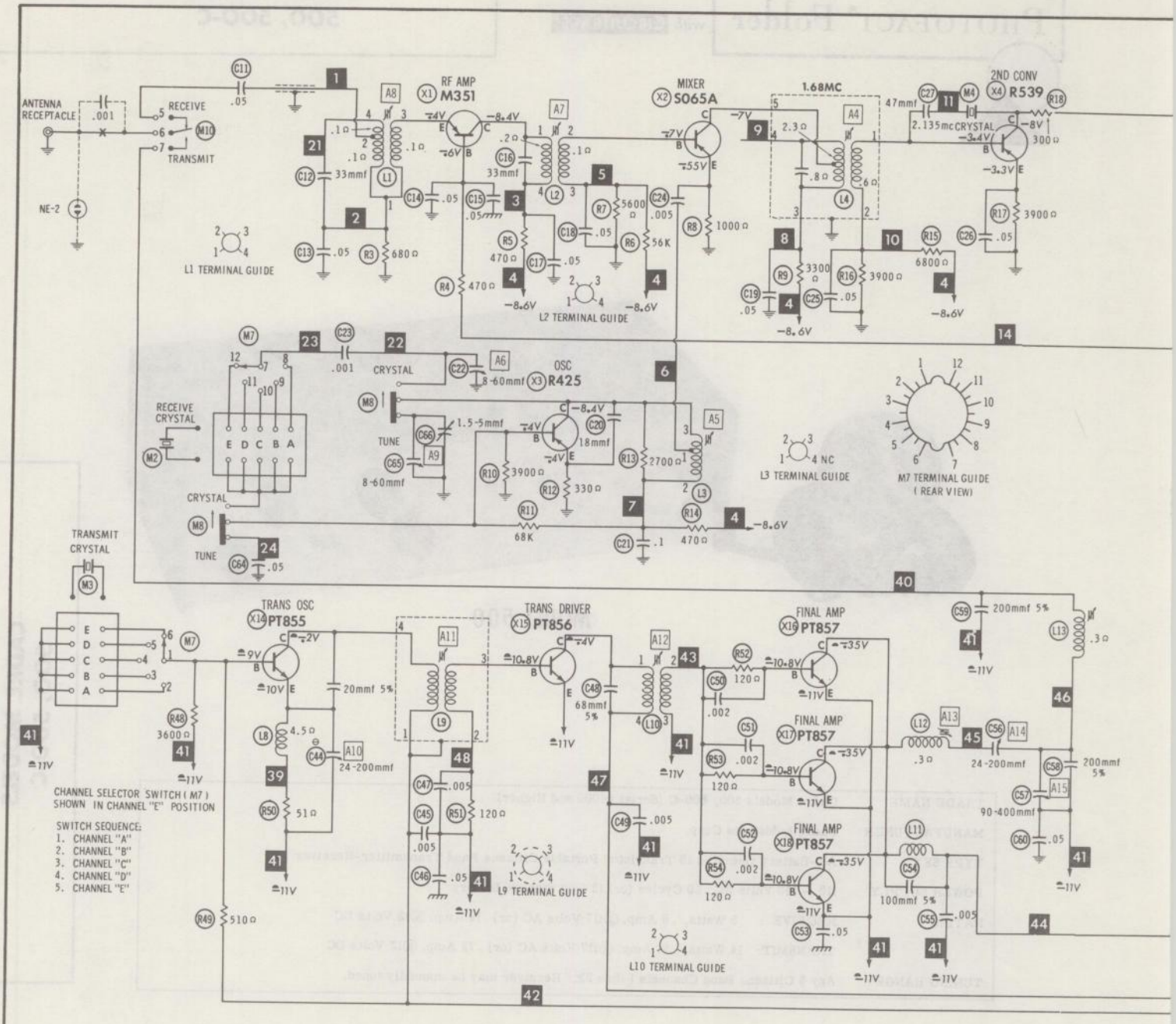

ALL MEASUREMENTS MADE IN RECEIVE POSITION UNLESS OTHERWISE DESIGNATED
⏏ MEASURED IN TRANSMIT POSITION

RESISTANCE MEASUREMENTS NOT GIVEN BECAUSE OF THE WIDE VARIATION IN INTERNAL TRANSISTOR RESISTANCE.

⊖ SEE PARTS LIST FOR ALTERNATE VALUE OR APPLICATION

1. DC voltage measurements taken with vacuum tube voltmeter.
2. Socket connections or transistor terminals are shown as bottom views.
3. Measured values are from socket pin or terminal to common ground.
4. Nominal tolerance on component values makes possible a variation of ±15% in voltage and resistance readings.
5. Volume control at maximum, no signal applied for voltage measurements.

A PHOTOFACT STANDARD NOTATION SCHEMATIC with CIRCUITRACE

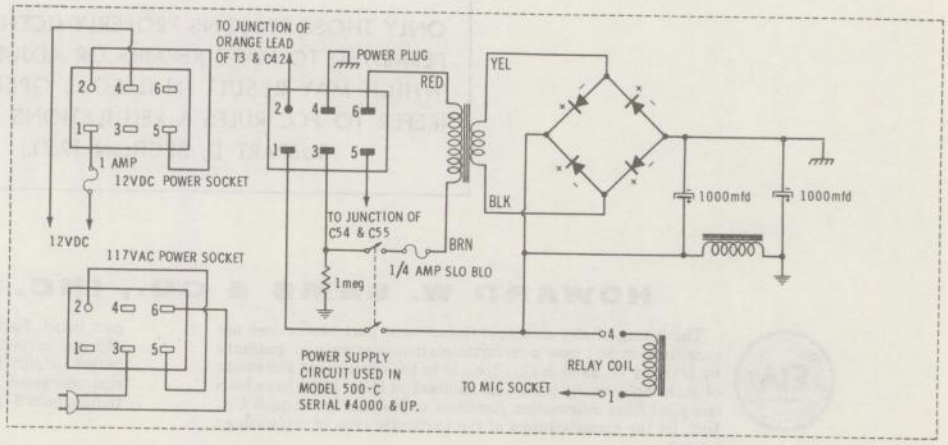

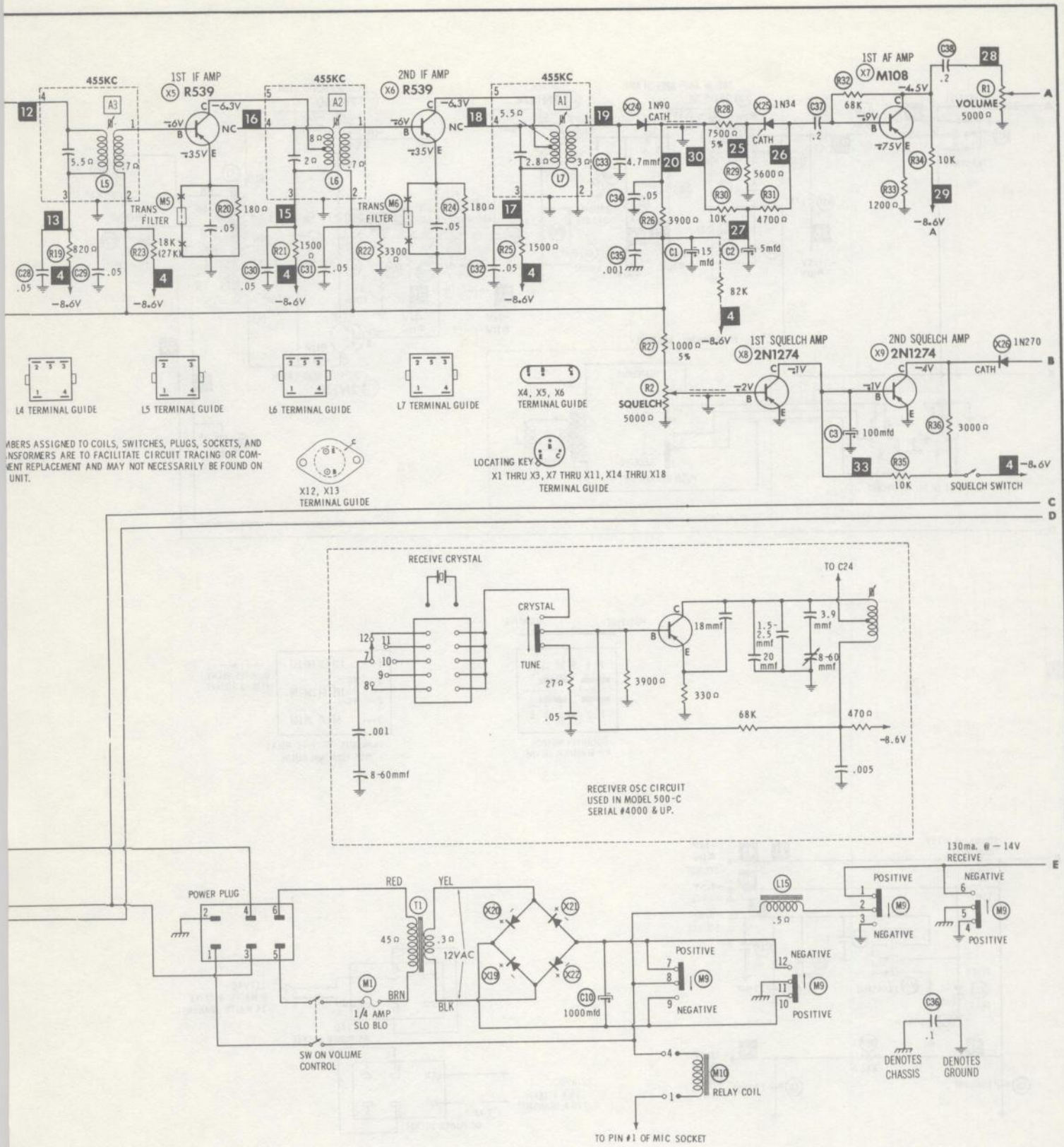

CADRE MODELS 500, 500-C

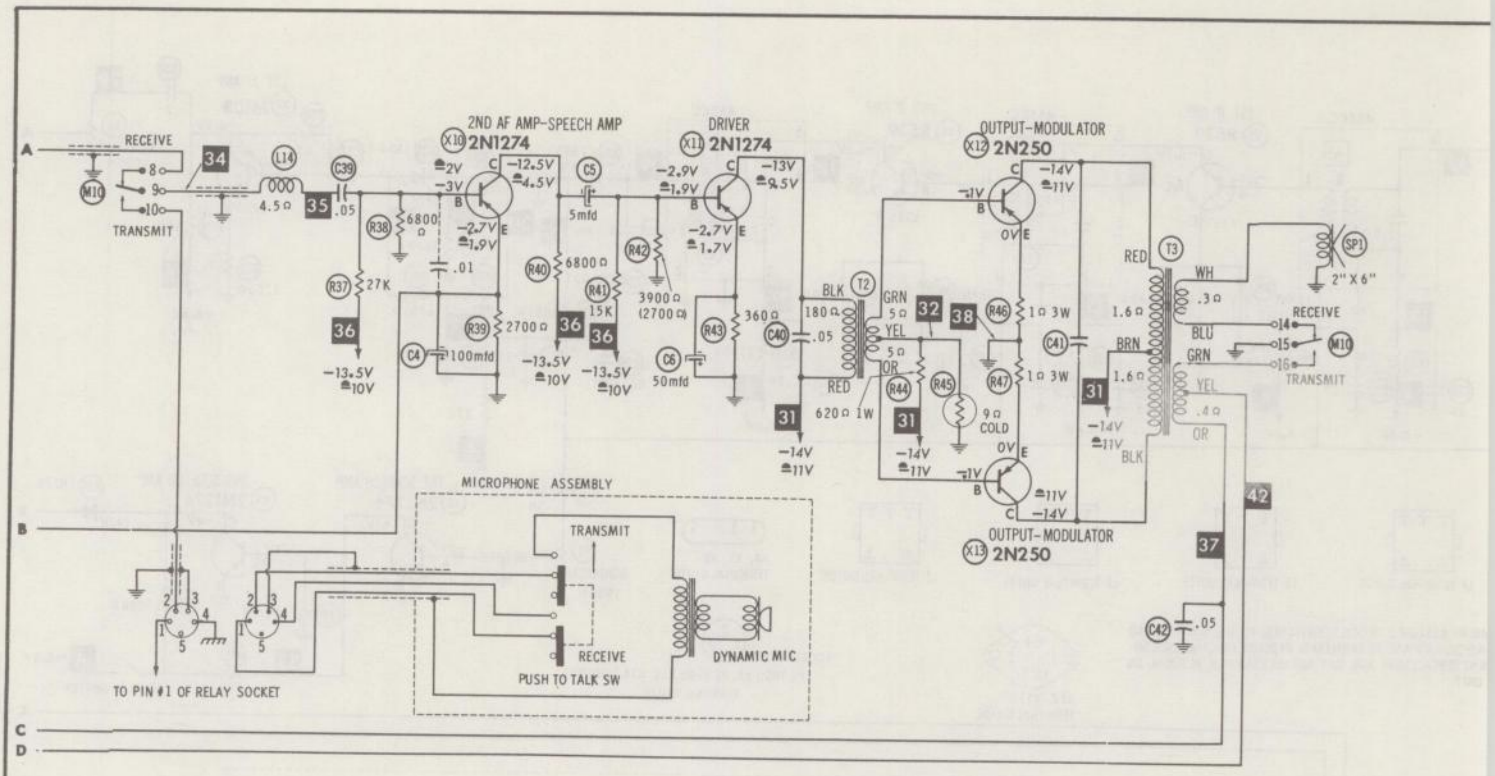

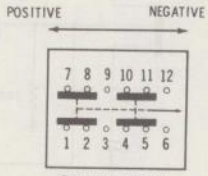

POLARITY SWITCH
M9 TERMINAL GUIDE

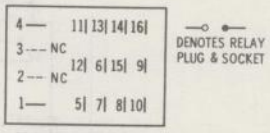

TRANSMIT - RECEIVE RELAY
M10 TERMINAL GUIDE

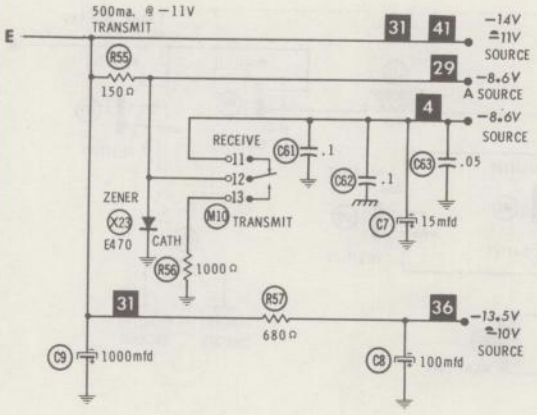

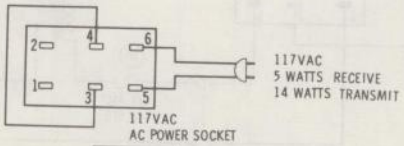

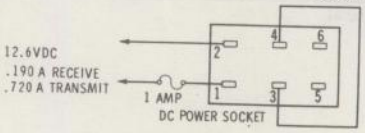

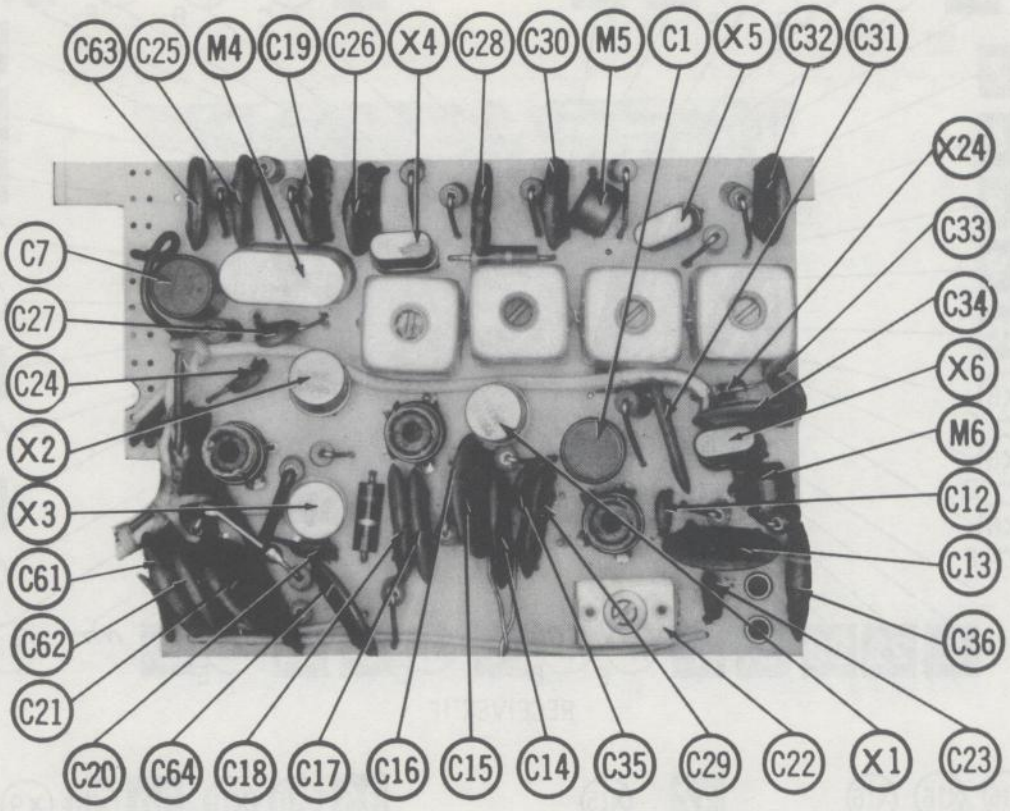

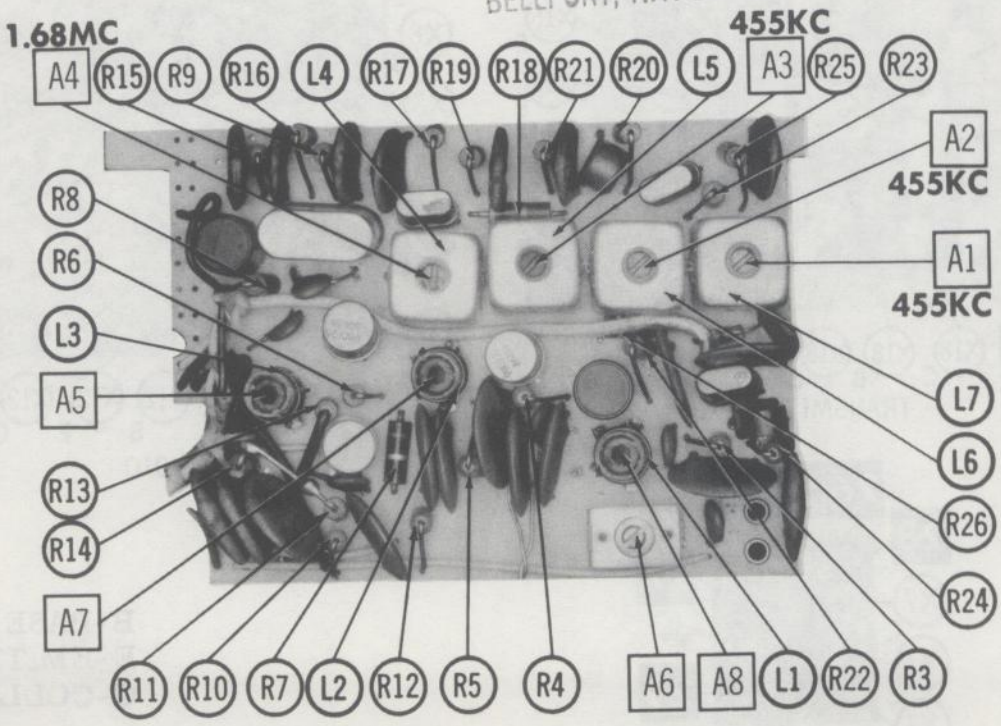

RECEIVER IF PRINTED BOARD

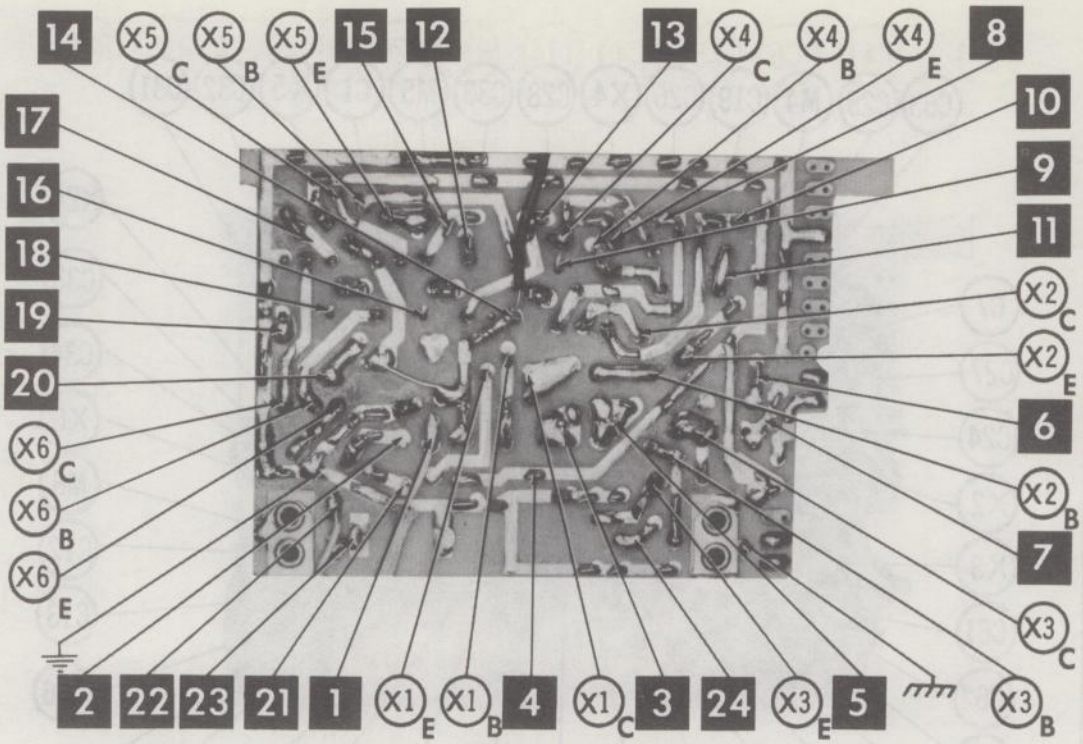

RECEIVER IF

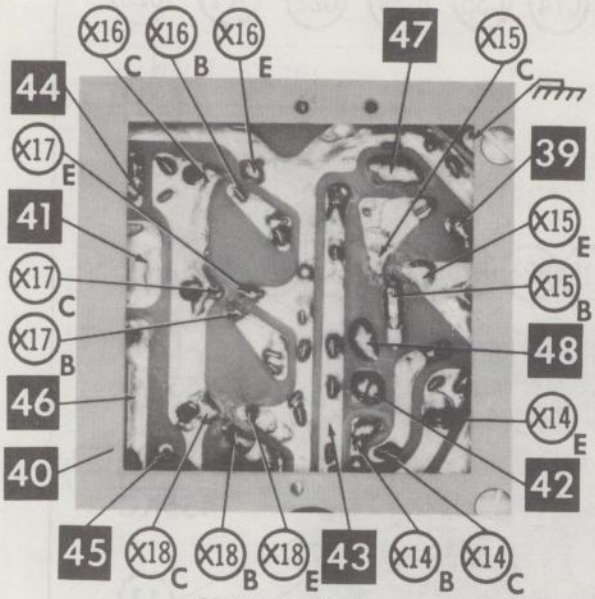

TRANSMITTER

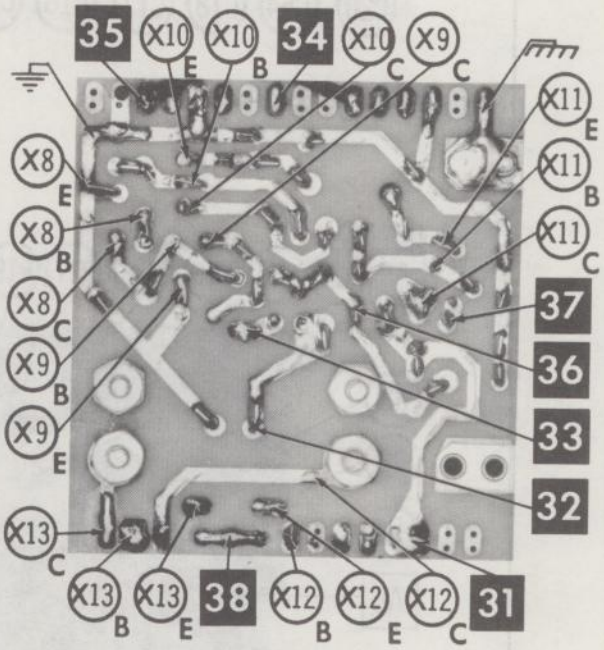

AUDIO

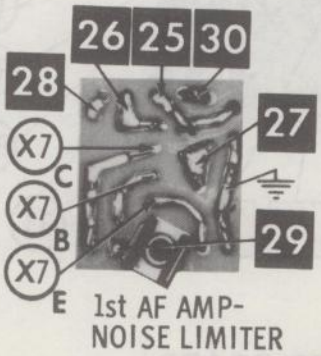

1st AF AMP-
NOISE LIMITER

B-BASE
E-EMITTER
C-COLLECTOR

PRINTED BOARDS

Howard W. Sams CIRCUITRACE Photos

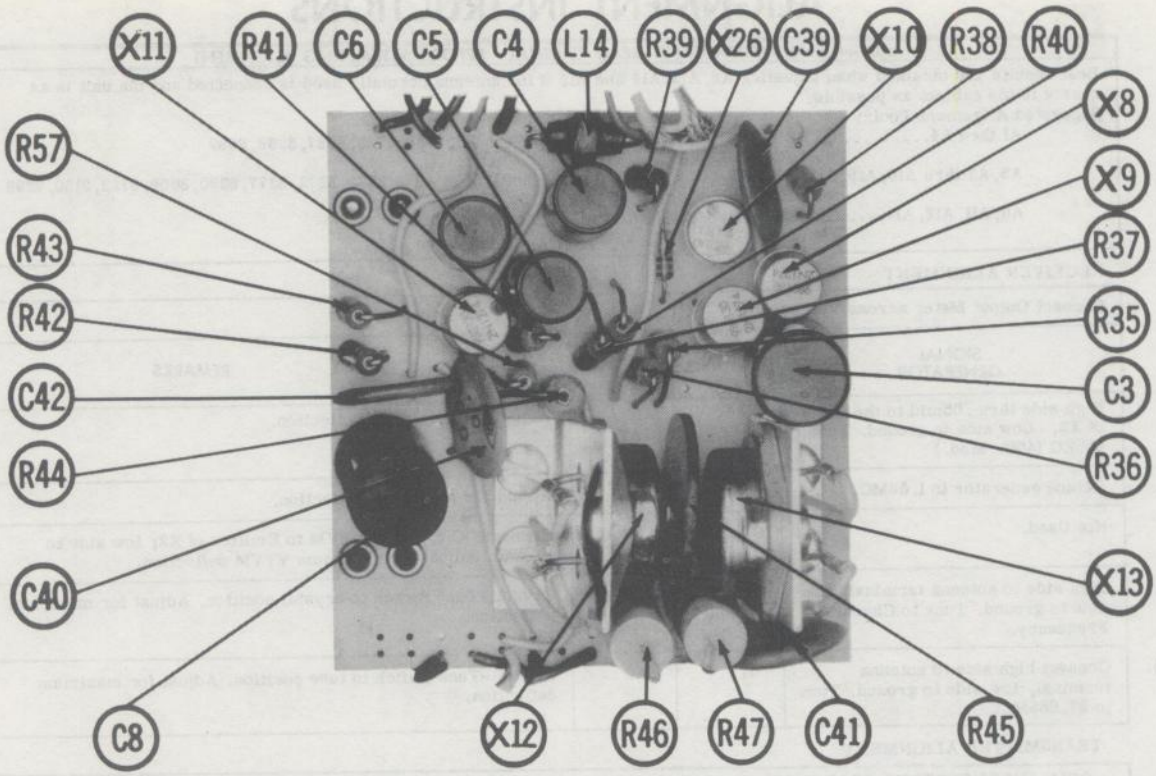

AUDIO PRINTED BOARD

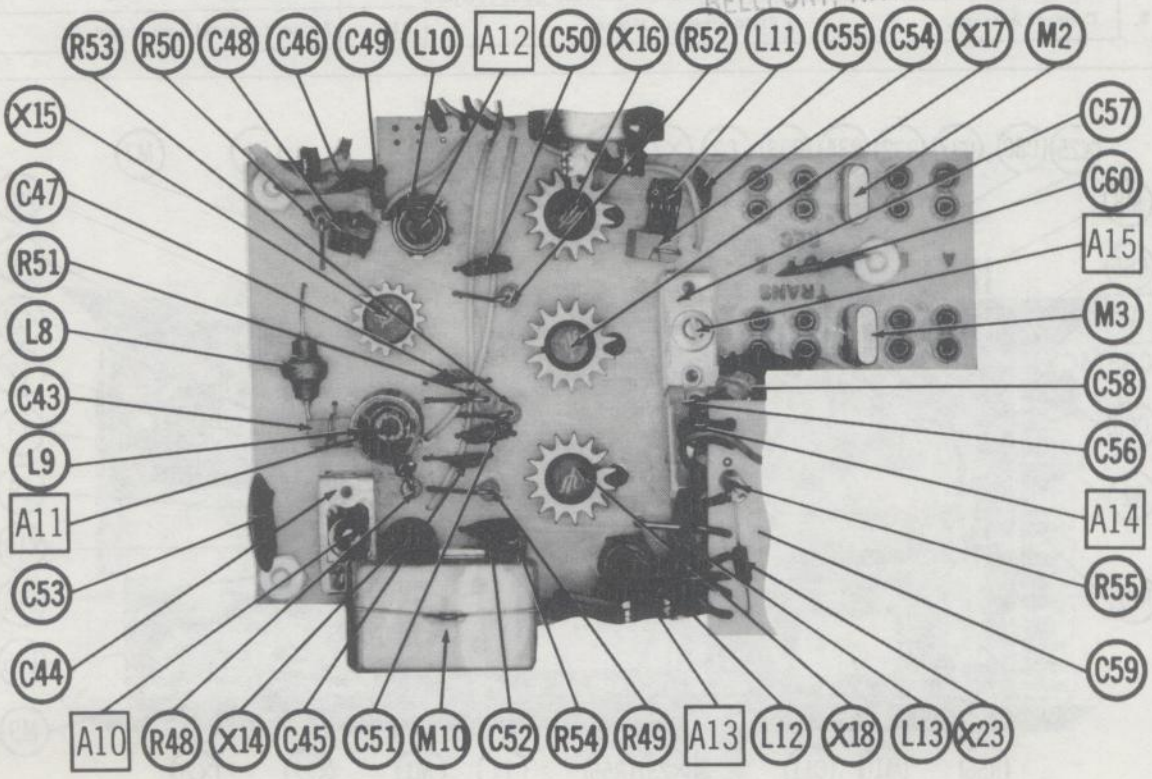

TRANSMITTER PRINTED BOARD

ALIGNMENT INSTRUCTIONS

ALIGNMENT INSTRUCTIONS—READ CAREFULLY BEFORE ATTEMPTING ALIGNMENT

Best results are obtained when adjusting A8, A13, A14 and A15 if the antenna normally used is connected and the unit is as nearly in the cabinet as possible.

Suggested Alignment Tools:

A1 thru A4..... GENERAL CEMENT #5009, 8195, 8274, 8275, 8728, 8729, 8987, 8988, 8989
WALSCO #2515, 2531, 2532

A5, A7 thru A10, A15, A16... GENERAL CEMENT #5000, 5003, 5066, 8271, 8272, 8276, 8277, 8290, 8609, 8722, 9150, 9298
WALSCO #2515, 2516, 2518, 2519, 2525, 2541

A6, A11, A12, A14.....GENERAL CEMENT #8282, 8606, 8606-L, 9091
WALSCO #2526, 2541, 2542, 2543, 2544

RECEIVER ALIGNMENT

Connect Output Meter across Voice Coil.

	SIGNAL GENERATOR	CHANNEL	ADJUST	REMARKS
1.	High side thru .05mfd to the base of X2. Low side to ground. Tune to 455KC (400~ Mod.)	Any	A1, A2, A3	Adjust for maximum deflection.
2	Retune generator to 1.68MC.	Any	A4	Adjust for maximum deflection.
3.	Not Used.	Center Channel	A5, A6	Connect DC probe of VTVM to Emitter of X2; low side to ground. Adjust for maximum VTVM deflection.
4.	High side to antenna terminal, low side to ground. Tune to Channel Frequency.	Center Channel	A7, A8	Crystal-Tune Switch to crystal position. Adjust for maximum deflection.
5.	Connect high side to antenna terminal, low side to ground. Tune to 27.085MC.	11	A9	Crystal-Tune Switch to tune position. Adjust for maximum deflection.

TRANSMITTER ALIGNMENT

ONLY THOSE PERSONS PROPERLY LICENSED ARE PERMITTED TO MAKE REPAIRS OR ADJUSTMENTS WHICH MAY RESULT IN ILLEGAL OPERATION. (REFER TO FCC RULES & REGULATIONS PART 19, SUBPART D, SECTION 19.71)

	SPECIAL INSTRUCTIONS	INDICATOR	ADJUST	
1.	Channel Selector to center Frequency. Connect dummy load or antenna.	Field Strength Meter or RF Wattmeter. Remove shorting wire between pins 3 and 4 of power socket. Connect 0-500 DC milliammeter between these two pins.	A10, A11, A12, A13, A14	Key transmitter. Adjust for maximum output. Milliammeter must not exceed 380MA. Replace shorting wire.
2.	Connect Antenna.	Field Strength Meter.	A15	Adjust for maximum output.

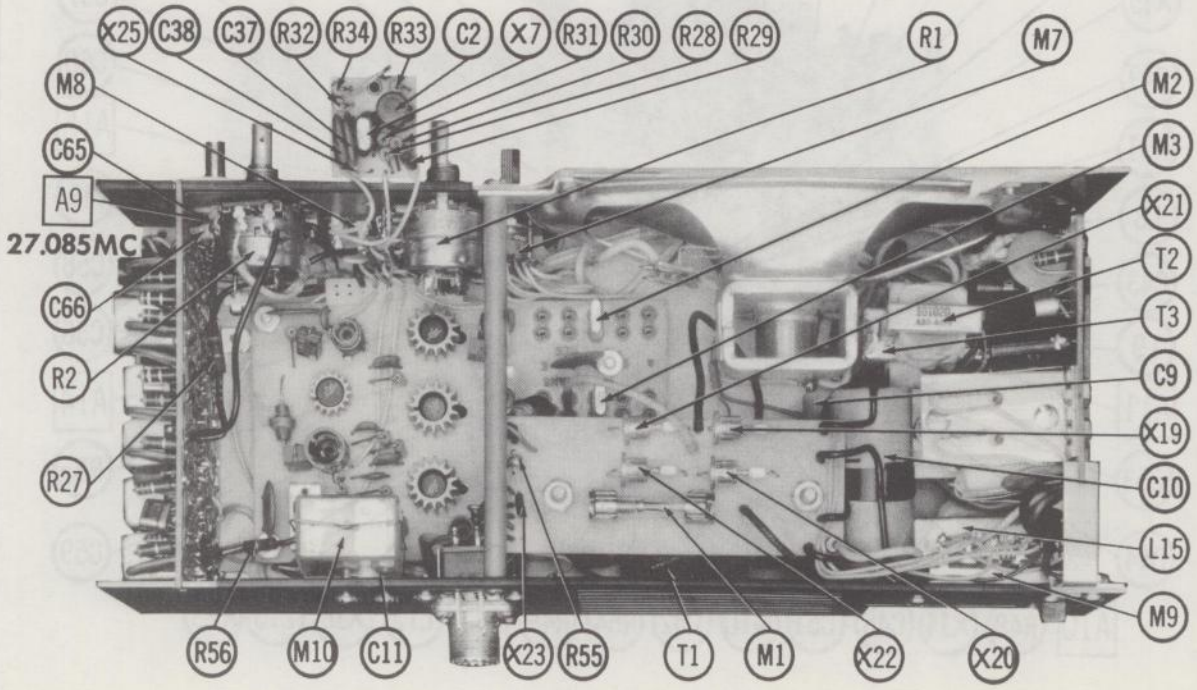

CHASSIS—TOP VIEW

PARTS LIST AND DESCRIPTION

TRANSISTORS

ITEM No.	ORIG. TYPE	USE	REPLACEMENT DATA: GENERAL ELECTRIC PART No.	REPLACEMENT DATA: RCA PART No.	NOTES
X1	M351	RF Amplifier	GE-1		PNP
X2	S065A	Mixer	GE-1		PNP
X3	R425	Oscillator	GE-1		PNP
X4	R539	2nd Converter	GE-1		PNP
X5	R539	1st IF Amplifier	GE-1		PNP
X6	R539	2nd IF Amplifier	GE-1		PNP
X7	M108	1st AF Amplifier	GE-2	2N406	PNP
X8	2N1274	1st Squelch Amplifier	GE-2	2N591	PNP
X9	2N1274	2nd Squelch Amplifier	GE-2	2N591	PNP
X10	2N1274	2nd AF Amplifier and Speech Amplifier	GE-2	2N591	PNP
X11	2N1274	Driver	GE-2	2N591	PNP
X12	2N250	Output-Modulator	GE-3	2N301	PNP
X13	2N250	Output-Modulator	GE-3	2N301	PNP
X14	PT855	Transmit-Oscillator	GE-6		NPN
X15	PT856	Transmit Driver	GE-6		NPN
X16	PT857	Final Amplifier	GE-6		NPN
X17	PT857	Final Amplifier	GE-6		NPN
X18	PT857	Final Amplifier	GE-6		NPN

POWER RECTIFIERS & SIGNAL DIODES

ITEM No.	CURRENT RATING (Measured)	ORIGINAL Part or Type No.	RECTIFIERS: RCA PART No.	RECTIFIERS: SARKES TARZIAN PART No.	DIODES	NOTES
X19	.500A	101403	1N3193	10H		AC Rectifier (1N536)
X20	.500A	101403	1N3193	10H		
X21	.500A	101403	1N3193	10H		
X22	.500A	101403	1N3193	10H		
X23		100624				(Zener E470)
X24		101153				Audio Detector (1N90)
X25		101679				Noise Limiter (1N34)
X26		101154				Squelch (1N270)

ELECTROLYTIC CAPACITORS

ITEM No.	RATING: CAP.	RATING: VOLT.	REPLACEMENT DATA: CADRE PART No.	AEROVOX PART No.	CORNELL-DUBILIER PART No.	GENERAL ELECTRIC PART No.	MALLORY PART No.	PYRAMID PART No.	SPRAGUE PART No.
C1	15	15	101013	BCD15015	ECPB409	MT1-10	TT15X15	MLV15-15	VL-1168
C2	5	12	101115	BCD12005	ECPB405	MT1-3	TT12X5	MLV5-12	VL-1124
C3	100	12	101656	BCD12100	ECPB417	MT1-19	TT12X100	MLV100-12	VL-1140
C4	100	3	100689	BCD3100	ECPB417	MT1-22	PET1400	MLV100-3	VL-1051
C5	5	15	101431	BCD15005	ECPB405	MT1-3	PET1535	MLV5-15	VL-1164
C6	50	6	101113	BCD6050	ECPB115	MT1-15	TT6X50	MLV50-6	VL-1094
C7	15	15	101013	BCD15015	ECPB409	MT1-10	TT15X15	MLV15-15	VL-1168
C8	100	12	101656	BCD12100	ECPB417	MT1-19	TT12X100	MLV100-12	VL-1140
C9	1000	15	101404	PRS1230	BR1000-15	QT1-32	TC1501	TD-1000-15	TVA-1163
C10	1000	15	101404	PRS1230	BR1000-15	QT1-32	TC1501	TD-1000-15	TVA-1163

FIXED CAPACITORS

ITEM No.	RATING	REMARKS	REPLACEMENT DATA: AEROVOX PART No.	CENTRALAB PART No.	CORNELL-DUBILIER PART No.	ELMENCO PART No.	MALLORY PART No.	SPRAGUE PART No.
C11	.05		TTD-05	DDA-503	H-05S5			TG-S50
C12	33		DI-33	DD-330	L10Q33	CCD-330	GP433	5GA-Q33
C13	.05		TTD-05	DDA-503	H-05S5			TG-S50
C14	.05		TTD-05	DDA-503	H-05S5			TG-S50
C15	.05		TTD-05	DDA-503	H-05S5			TG-S50
C16	33		DI-33	DD-330	L10Q33	CCD-330	GP433	5GA-Q33

FIXED CAPACITORS (cont)

ITEM No.	RATING	REMARKS	REPLACEMENT DATA: AEROVOX PART No.	CENTRALAB PART No.	CORNELL-DUBILIER PART No.	ELMENCO PART No.	MALLORY PART No.	SPRAGUE PART No.
C17	.05		TTD-05	DDA-503	H-05S5			TG-S50
C18	.05		TTD-05	DDA-503	H-05S5			TG-S50
C19	.05		TTD-05	DDA-503	H-05S5			TG-S50
C20	18		DI-18	DD-180	L10Q18	CCD-180	GP418	5GA-Q18
C21	.1		TTD-1	DA-104	H-05P1			TH-P10
C22	8-60	#101417				404		
C23	.001		DI-001	DM-102	H-05D1	CCD-102	GP210	5GA-D10
C24	.005		TTD-005	DM-502	H-05D5	CCD-502	TA-250	TH-D50
C25	.05		TTD-05	DDA-503	H-05S5			TG-S50
C26	.05		TTD-05	DDA-503	H-05S5			TG-S50
C27	47		DI-47	DD-470	L10Q47	CCD-470	GP447	5GA-Q47
C28	.05		TTD-05	DDA-503	H-05S5			TG-S50
C29	.05		TTD-05	DDA-503	H-05S5			TG-S50
C30	.05		TTD-05	DDA-503	H-05S5			TG-S50
C31	.05		TTD-05	DDA-503	H-05S5			TG-S50
C32	.05		TTD-05	DDA-503	H-05S5			TG-S50
C33	4.7	#100687	DI-4.7					
C34	.05		TTD-05	DDA-503	H-05S5			TG-S50
C35	.001		DI-001	DM-102	H-05D1	CCD-102	GP210	5GA-D10
C36	.1		TTD-1	DA-104	H-05P1			TH-P10
C37	.2	#101502		UK10-204				
C38	.2	#101502		UK10-204				
C39	.05		TTD-05	DDA-502	H-05S5			TG-S50
C40	.05		TTD-05	DDA-503	H-05S5			TG-S50
C41	.1		TTD-1	DA-104	H-05P1			TH-P10
C42	.05		TTD-05	DDA-503	H-05S5			TG-S50
C43	20 5%		CM-15C-200	TCN-20	22P5Q2	CM-15C-200		MS-42
C44	24-200 ①	#101422				425		
C45	.005		TTD-005	DM-502	H-05D5	CCD-502	TA-250	TH-D50
C46	.05		TTD-05	DDA-503	H-05S5			TG-S50
C47	.005		TTD-005	DM-502	H-05D5	CCD-502	TA-250	TH-D50
C48	68 5%		CM-15E-680	TCN-68	22R5Q68	CM-15E-680		MS-468
C49	.005		TTD-005	DM-502	H-05D5	CCD-502	TA-250	TG-D50
C50	.002			DM-202	L10D2	CCD-202	GP220	5GA-D20
C51	.002			DM-202	L10D2	CCD-202	GP220	5GA-D20
C52	.002			DM-202	L10D2	CCD-202	GP220	5GA-D20
C53	.05		TTD-05	DDA-503	H-05S5			TG-S50
C54	100 5%		CM-15E-101	TCN-100	22R5T1	CM-15E-101	MCE235	MS-31
C55	.005		TTD-005	DM-502	H-05D5	CCD-502	TA-250	TH-D50
C56	24-200	#101422				425		
C57	90-400	#101421				429		
C58	200 5%		CM-15E-201	TCN-200	22R5T2	CM-15E-201	MCE237	MS-32
C59	200 5%		CM-15E-201	TCN-200	22R5T2	CM-15E-201	MCE237	MS-32
C60	.05		TTD-05	DDA-503	H-05S5			TG-S50
C61	.1		TTD-1	DA-104	H-05P1			TH-P10
C62	.1		TTD-1	DA-104	H-05P1			TH-P10
C63	.05		TTD-05	DD-503	H-05S5			TG-S50
C64	.05		TTD-05	DD-503	H-05S5			TG-S50
C65	8-60	#101417						
C66	1.5-5	#101062						

Cadre Part Number.
① Some versions use a 150mmf in this application.

CONTROLS

All wattages 1/2 watt, or less, unless otherwise listed.

ITEM No.	USE	RESISTANCE	REPLACEMENT DATA: CADRE PART No.	CENTRALAB PART No.	CLAROSTAT PART No.	CTS-IRC PART No.	MALLORY PART No.
R1	Volume, Power On-Off	5000Ω	101007	B-11, KR-2 or (F2-5000, SU204, KR-2)		Q13-114, 76-2	U-12, US-27, or (UA53A, US42, SF1000)
R2	Squelch, Squelch On-Off	5000Ω	101189	B-11, KR-1 or (F2-5000, SU204, KR-1)		Q13-114, 76-1	U-12, US-26 or (UA53A, US41, SF1000)

PARTS LIST AND DESCRIPTION (CONTINUED)

RESISTORS

All wattages 1/2 watt, or less, unless otherwise listed.

ITEM No.	RATING	REPLACEMENT DATA		
		IRC PART No.	WORKMAN PART No.	REMARKS
R3	680Ω			
R4	470Ω			
R5	470Ω			
R6	56K			
R7	5600Ω			
R8	1000Ω			
R9	3300Ω			
R10	3900Ω			
R11	68K			
R12	330Ω			
R13	2700Ω			
R14	470Ω			
R15	6800Ω			
R16	3900Ω			
R17	3900Ω			
R18	300Ω			
R19	820Ω			
R20	180Ω			
R21	1500Ω			
R22	3300Ω			
R23	18K			(27K) †
R24	180Ω			
R25	1500Ω			
R26	3900Ω			
R27	1000Ω 5%			
R28	7500Ω 5%			
R29	5600Ω			
R30	10K			

ITEM No.	RATING	REPLACEMENT DATA		
		IRC PART No.	WORKMAN PART No.	REMARKS
R31	4700Ω			
R32	68K			
R33	1200Ω			
R34	10K			
R35	10K			
R36	3000Ω			
R37	27K			
R38	6800Ω			
R39	2700Ω			
R40	6800Ω			
R41	15K			
R42	3900Ω			(2700) †
R43	360Ω			
R44	620Ω 1W			
R45	9Ω Cold			#101086
R46	1Ω 3W			
R47	1Ω 3W			
R48	3600Ω			
R49	510Ω			
R50	51Ω			
R51	120Ω			
R52	120Ω			
R53	120Ω			
R54	120Ω			
R55	150Ω			
R56	1000Ω			
R57	680Ω			

Cadre Part Number.
† Alternate Value.

COILS (RF-IF)

ITEM No.	USE	REPLACEMENT DATA					NOTES
		CADRE PART No.	Merit PART No.	Miller PART No.	Stancor PART No.	Workman PART No.	
L1	Ant.	101396					
L2	RF	101397					
L3	Receiver Osc.	101398					
L4	1.68MC IF	101399					
L5	1st 455KC IF	101400					
L6	2nd 455KC IF	101018					
L7	3rd 455KC IF	101019					
L8	RF Choke (50uh)	101424					
L9	Transmit Osc.	101425					
L10	Transmit Driver	101426					
L11	Final	101427					
L12	Ant. Load	101428					
L13	Ant. Load	101429					
L14	RF Choke (50uh)	101424					

FILTER CHOKE

ITEM No.	RATINGS			REPLACEMENT DATA						NOTES
	CURRENT (Measured)	DC RES.	INDUCTANCE (0 CURRENT 1000~)	CADRE PART No.	MERIT PART No.	STANCOR PART No.	THORDARSON PART No.	TRIAD PART No.		
L15	.500A	.5Ω	175MH	101056						

TRANSFORMER (POWER)

ITEM No.	RATING			REPLACEMENT DATA					NOTES
	PRI.	SEC. 1	SEC. 2	CADRE PART No.	MERIT PART No.	STANCOR PART No.	THORDARSON PART No.	TRIAD PART No.	
T1	117V ⓐ .08A (.21A)*	12V ⓐ .130A (.5A)*		101110					* Transmit

TRANSFORMER (DRIVER)

ITEM No.	TURNS RATIO		REPLACEMENT DATA					NOTES
	PRI.	SEC.	CADRE PART No.	MERIT PART No.	STANCOR PART No.	THORDARSON PART No.	TRIAD PART No.	
T2	4	1	101020					

TRANSFORMER (AUDIO OUTPUT)

ITEM No.	IMPEDANCE		REPLACEMENT DATA					NOTES
	PRI.	SEC. 1	CADRE PART No.	Merit PART No.	Stancor PART No.	Thordarson PART No.	Triad PART No.	
T3	100Ω CT	3-4Ω	101021					
		SEC. 2						
		25Ω CT						

SPEAKER

ITEM No.	TYPE			REPLACEMENT DATA		NOTES
	SIZE	FIELD	V. C. IMP.	CADRE PART No.	QUAM PART No.	
SP1	2" x 6"	PM	3-4Ω	101025		

FUSES

ITEM No.	TYPE	RATING	REPLACEMENT DATA					
			CADRE PART No.		LITTELFUSE PART No.		BUSS PART No.	
			FUSE	HOLDER	FUSE	HOLDER	FUSE	HOLDER
M1	3AG S/B	1/4A 125V 1A	101095 ① 101437 ②	101094	313.250 (3AG 1/4A 125V S/B	121004	MDL 1/4	4405

① AC Power Supply
② DC Power Supply

MISCELLANEOUS

ITEM No.	PART NAME	CADRE PART No.	NOTES
M2	Crystal		Receive Specify Channel & Frequency
M3	Crystal		Transmit
M4	Crystal	10116	2nd Converter (2.135MC)
M5	Trans-Filter		(Clevite TF-014)
M6	Trans.-Filter		(Clevite TF-014)
M7	Switch	101028	Channel Selector (Rotary Type)
M8	Switch	101029	Crystal-Tune (DPDT Slide Type)
M9	Switch	101121	Polarity (2-Position Slide Type)
M10	Relay	101024	Receive-Transmit (185Ω - 12VDC)

WIRING DATA

General-use Hook-up Wire .... Use BELDEN No. 8530 (Solid) Available in 12 Colors
8524 (Stranded) Available in 12 Colors
Shielded Antenna Lead ..... Use BELDEN No. 8214 Lowest Loss (RG-8/U Type)
8237 Low Loss (RG-8/U)
8240 (Solid) Miniature (RG-58/U)
8259 (Stranded) Miniature (RG-58A/U)
Coiled Microphone Cable ..... Use BELDEN No. 8497 3 Conductor- 1 Shielded for Press-to-Talk (Neoprene)
8496 3 Conductor- 1 Shielded for Press-to-Talk (Vinyl)
Ignition Noise Suppression .... Use BELDEN No. 7300-Series Spark-Plug Sets
Bonding Strap ..... Use BELDEN No. 8661 (3/8 In.)

CAPITAL MODEL ND-309

NOTICE

ONLY THOSE PERSONS PROPERLY LICENSED ARE PERMITTED TO MAKE REPAIRS OR ADJUSTMENTS WHICH MAY RESULT IN ILLEGAL OPERATION. (REFER TO FCC RULES & REGULATIONS PART 19, SUBPART D, SECTION 19.71.)

TRADE NAME	Capital Model ND-309
SUPPLIER	Associated Importers, 1168 Battery Street, San Francisco 11, California
TYPE SET	Battery Operated 9 Transistor Portable Citizens Band Transmitter-Receiver
POWER SUPPLY	9 Volts DC RATING 8MA@9 Volts DC, Receive (No Signal, Min. Volume) 12MA@9 Volts DC, Receive (Signal, Normal Volume) 22MA@9 Volts DC, Transmit (No Signal) 30MA@9 Volts DC, Transmit (Modulated)
TUNING RANGE	Any one of Citizens Band Channels 1 thru 22

ALIGNMENT INSTRUCTIONS

ALIGNMENT INSTRUCTIONS—READ CAREFULLY BEFORE ATTEMPTING ALIGNMENT

Best results will be obtained when adjusting A5 and A7 if the antenna normally used is connected and the unit is as nearly in the cabinet as possible.
Suggested Alignment Tools:
A1, A2, A3..... GENERAL CEMENT #5000, 5003, 5066, 8276, 8290, 9087, 9089
WALSCO #2512, 2525, 2528

RECEIVER ALIGNMENT

Connect DC VTVM across Volume Control.

	SIGNAL GENERATOR	CHANNEL	ADJUST	REMARKS
1.	High side thru .005mfd to the base of X1, low side to ground. (Tune to 455KC Unmod.)		A1, A2, A3	Adjust for maximum deflection.
2.	Fashion loop of several turns of wire and radiate signal into loop of receiver.	Highest Channel Used	A4	Adjust for maximum deflection. Rock A4 to each side of peak. Note Rate of dropoff and set just below peak, on side of gradual dropoff.
3.	"	Channel Desired	A5	Adjust for maximum deflection.

TRANSMITTER ALIGNMENT

ONLY THOSE PERSONS PROPERLY LICENSED ARE PERMITTED TO MAKE REPAIRS OR ADJUSTMENTS WHICH MAY RESULT IN ILLEGAL OPERATION. (REFER TO FCC RULES & REGULATIONS PART 19, SUBPART D, SECTION 19.71)

	SPECIAL INSTRUCTIONS	INDICATOR	ADJUST	REMARKS
1.	Connect dummy load or antenna to antenna terminal.	DC VTVM Across R26.	A6, A7	Adjust for maximum deflection. Observe meter carefully while adjusting A6.

HOWARD W. SAMS & CO., INC. Indianapolis 6, Indiana

LY629

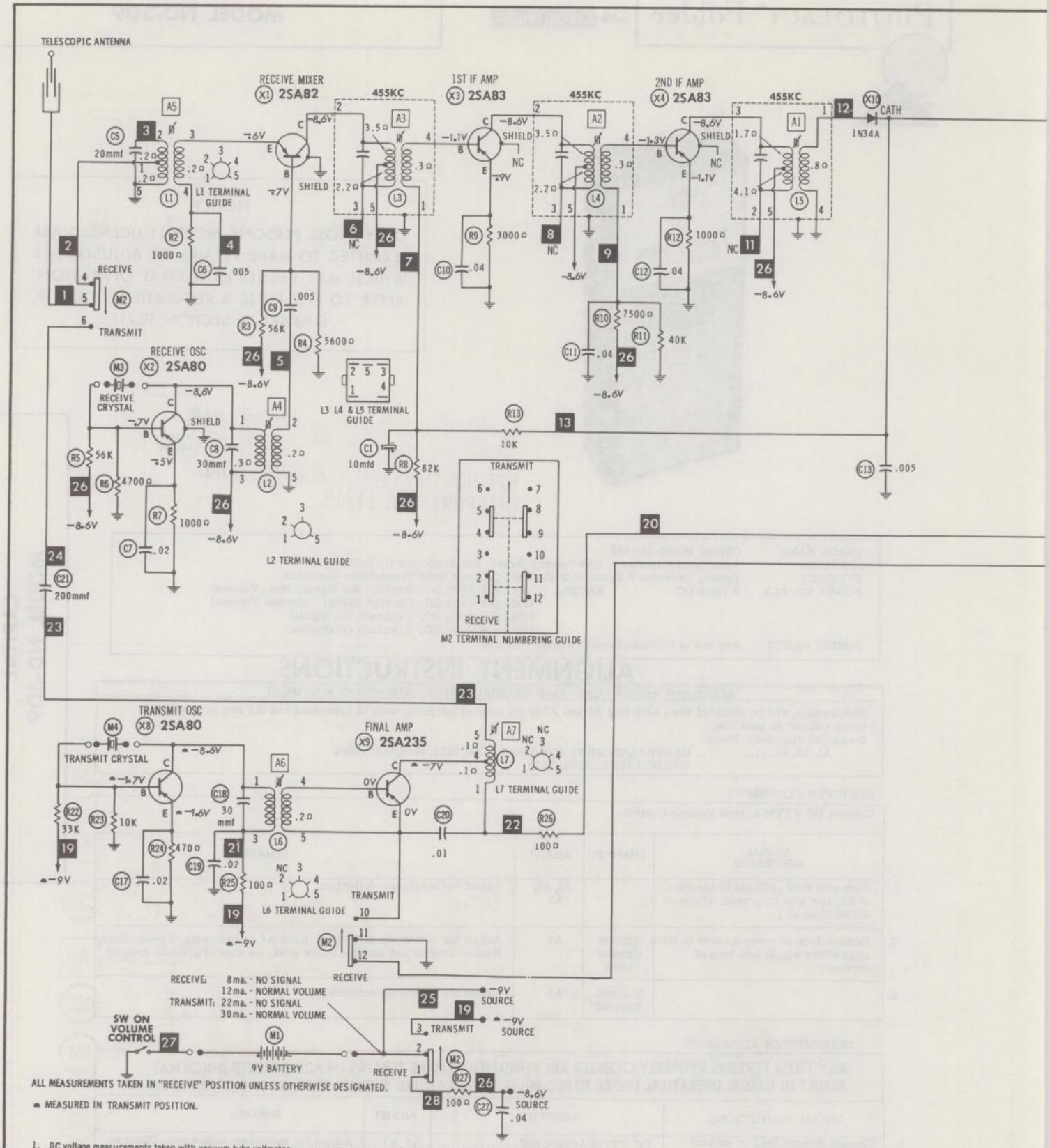

1. DC voltage measurements taken with vacuum tube voltmeter.
2. Socket connections or transistor terminals are shown as bottom views.
3. Measured values are from socket pin or terminal to common ground.
4. Nominal tolerance on component values makes possible a variation of ± 15% in voltage and resistance readings.
5. Volume control at maximum, no signal applied for voltage measurements.

RESISTANCE MEASUREMENTS NOT GIVEN BECAUSE OF THE WIDE VARIATION IN INTERNAL TRANSISTOR RESISTANCE.

A PHOTOFACT STANDARD NOTATION SCHEMATIC with CIRCUITRACE

CAPITAL
MODEL ND-309

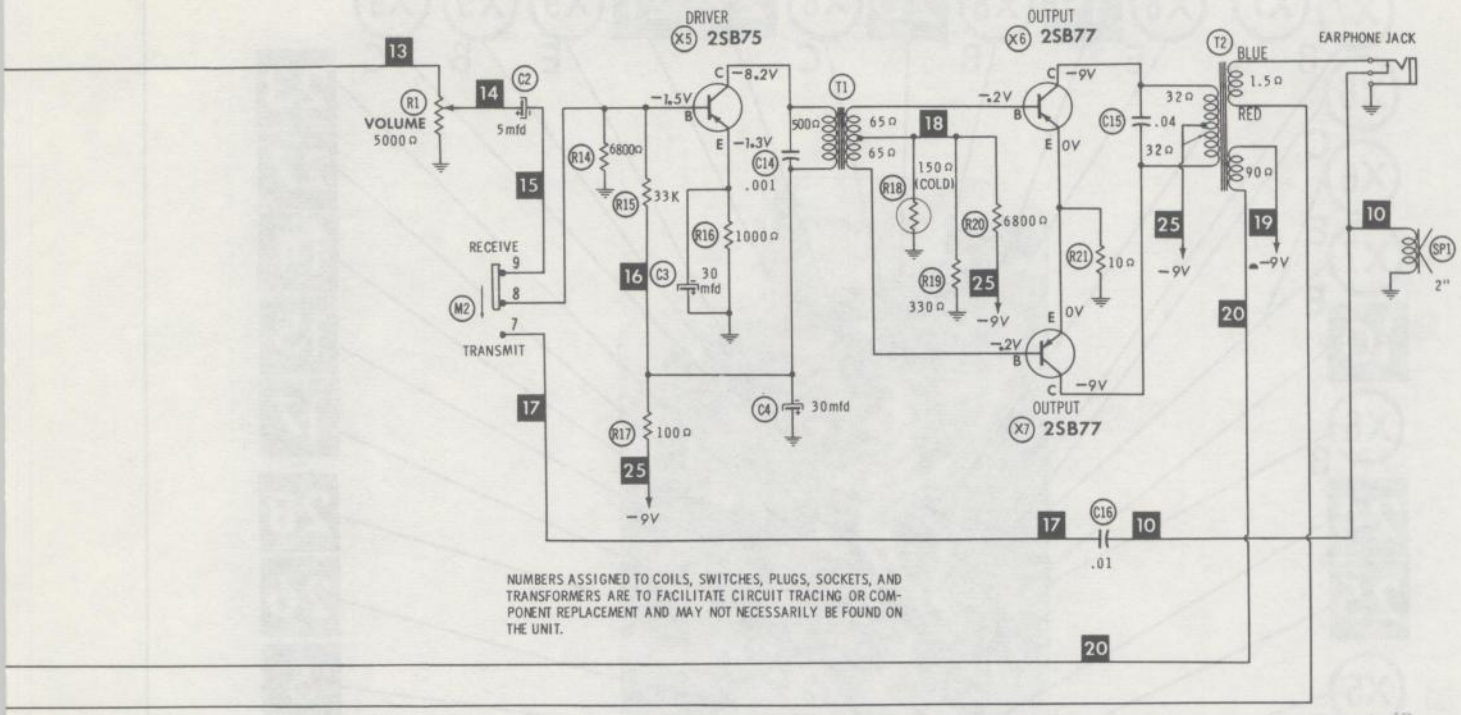

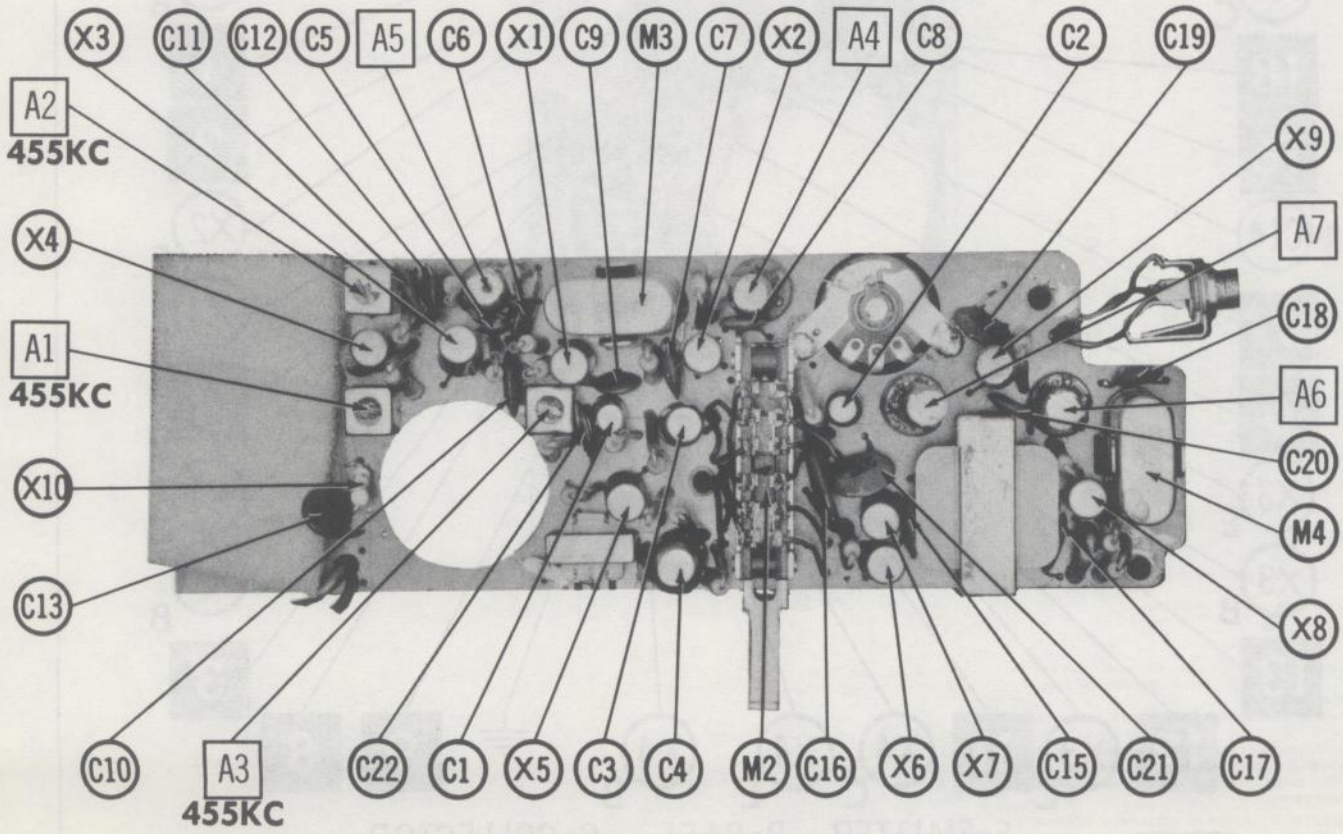

CHASSIS TOP VIEW-ALIGNMENT, CAPACITORS, & MISC. IDENT.

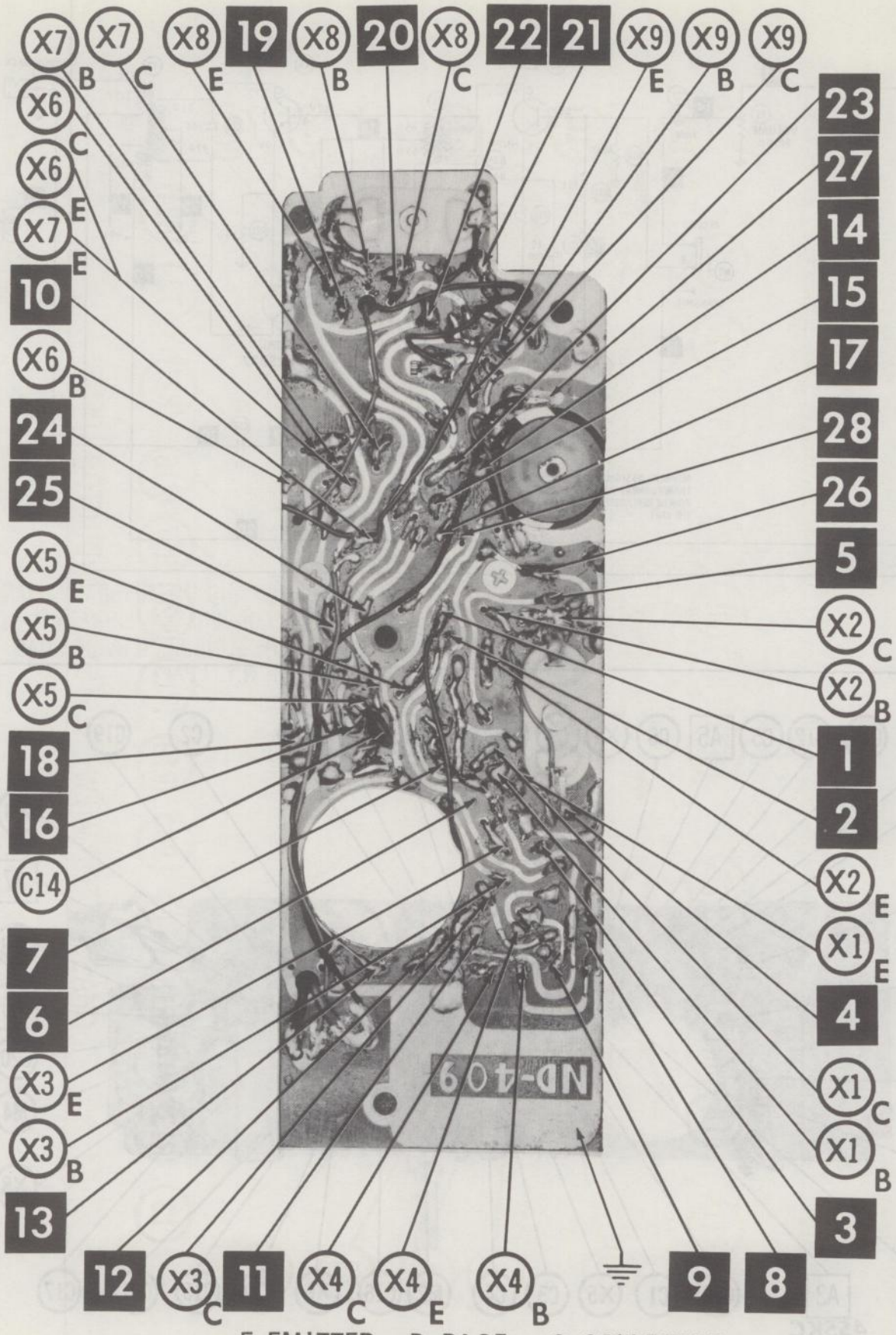

E-EMITTER B-BASE C-COLLECTOR

A Howard W. Sams CIRCUITRACE® Photo

PRINTED BOARD

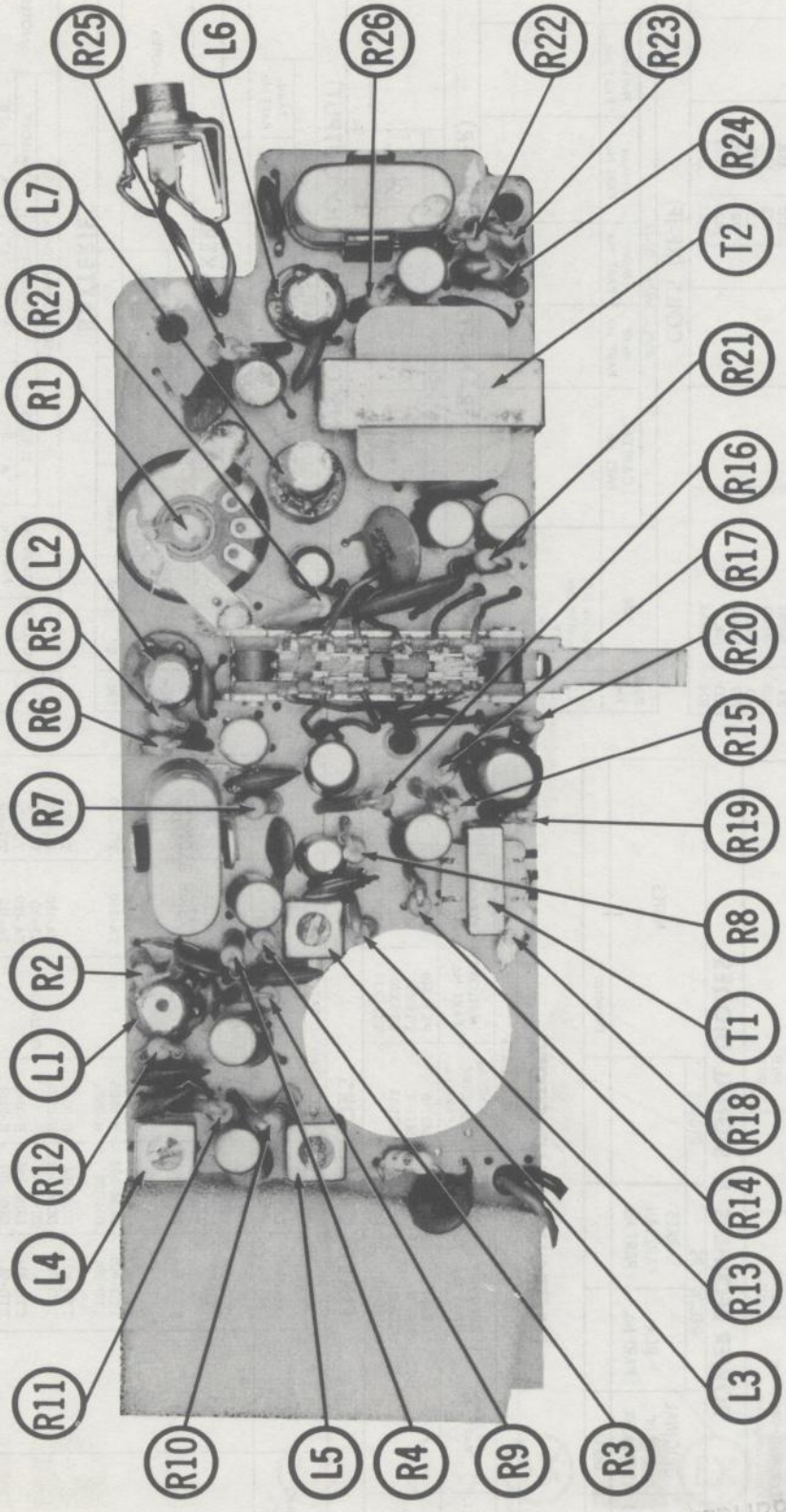

CHASSIS TOP VIEW- RESISTOR, INDUCTOR IDENT.

PARTS LIST AND DESCRIPTIONS

TRANSISTORS

ITEM No.	ORIG. TYPE	USE	REPLACEMENT DATA: GENERAL ELECTRIC PART No.	REPLACEMENT DATA: RCA PART No.	NOTES
X1	2SA82	Receive Mixer	GE-1		PNP
X2	2SA80	Receive Oscillator	GE-1		PNP
X3	2SA83	1st IF Amplifier	GE-1		PNP
X4	2SA83	2nd IF Amplifier	GE-1		PNP
X5	2SB75	Driver	GE-2	2N406	PNP
X6	2SB77	Output-Modulator	GE-2	2N408	PNP
X7	2SB77	Output-Modulator	GE-2	2N408	PNP
X8	2SA80	Transmit-Oscillator	GE-1		PNP
X9	2SA235	Final Amplifier	GE-1		PNP

POWER RECTIFIERS & SIGNAL DIODES

ITEM No.	CURRENT RATING (Measured)	ORIGINAL Part or Type No.	RECTIFIERS: RCA PART No.	RECTIFIERS: SARKES TARZIAN PART No.	DIODES	NOTES
X10		1N34A				Detector

ELECTROLYTIC CAPACITORS

ITEM No.	RATING: CAP.	RATING: VOLT.	CAPITAL PART No.	AEROVOX PART No.	CORNELL-DUBILIER PART No.	GENERAL ELECTRIC PART No.	MALLORY PART No.	PYRAMID PART No.	SPRAGUE PART No.
C1	10	10		CRE407	ECPB408	MT1-5	PET1340	MLV10-10	VL-1127
C2	5	3		CRE204	ECPB405	MT1-3	TT6X5	MLV5-3	VL-1035
C3	30	3		BCD3025	ECPB412	MT1-13	TT6X30	MLV30-6	VL-1043
C4	30	10		BCD10025	ECPB412		TT10X30	MLV35-15	VL-1132

FIXED CAPACITORS

ITEM No.	RATING	REMARKS	AEROVOX PART No.	CENTRALAB PART No.	CORNELL-DUBILIER PART No.	ELMENCO PART No.	MALLORY PART No.	SPRAGUE PART No.
C5	20			DD-200	L10Q2	CCD-200	GP420	5GA-Q20
C6	.005		TTD-005	DDM-502	H-05D5		TA-250	TG-D50
C7	.02		TTD-02	DDM-203	H-05S2		TA-120	TG-S20
C8	30			DD-300		CCD-300	GP430	5GA-Q30
C9	.005		TTD-005	DDM-502	H-05D5		TA-250	TG-D50
C10	.04							
C11	.04							
C12	.04							
C13	.005		TTD-005	DDM-502	H-05D5		TA-250	TG-D50
C14	.001		TTD-001	DM-102	H-05D1			
C15	.04							
C16	.1		TTD-1	DDA-104	H-05P1			TG-P10
C17	.02		TTD-02	DDM-203	H-05S2		TA-120	TG-S20
C18	30			DD-300		CCD-300	GP430	5GA-Q30
C19	.02		TTD-02	DDM-203	H-05S2		TA-120	TG-S20
C20	.01		TTD-01	DDM-103	H-05S1		TA-110	TG-S10
C21	200		BPD-0002	DD-201	L10T2	CCD-201	GP320	5GA-T20
C22	.04							

CONTROLS

All wattages 1/2 watt, or less, unless otherwise listed.

ITEM No.	USE	RESISTANCE	CAPITAL PART No.	CENTRALAB PART No.	CLAROSTAT PART No.	CTS-IRC PART No.	MALLORY PART No.
R1	Volume & Switch	5000Ω					

RESISTORS

All wattages 1/2 watt, or less, unless otherwise listed.

ITEM No.	RATING	IRC PART No.	WORKMAN PART No.	REMARKS	ITEM No.	RATING	IRC PART No.	WORKMAN PART No.	REMARKS
R2	1000Ω				R15	33K			
R3	56K				R16	1000Ω			
R4	5600Ω				R17	100Ω			
R5	56K				R18	150Ω Cold			
R6	4700Ω				R19	330Ω			
R7	1000Ω				R20	6800Ω			
R8	82K				R21	10Ω			
R9	3000Ω				R22	33K			
R10	7500Ω				R23	10K			
R11	40K				R24	470Ω			
R12	1000Ω				R25	100Ω			
R13	10K				R26	100Ω			
R14	6800Ω				R27	100Ω			

COILS (RF-IF)

ITEM No.	USE	CAPITAL PART No.	Merit PART No.	Miller PART No.	Stancor PART No.	Workman PART No.	NOTES
L1	Receive RF						
L2	Receive Osc.						
L3	1st IF						
L4	2nd IF						
L5	3rd IF						
L6	Transmit Osc.						
L7	Final						

TRANSFORMER (DRIVER)

ITEM No.	TURNS RATIO: PRI.	TURNS RATIO: SEC.	CAPITAL PART No.	MERIT PART No.	STANCOR PART No.	THORDARSON PART No.	TRIAD PART No.	NOTES
T1	1	1						

TRANSFORMER (AUDIO OUTPUT)

ITEM No.	IMPEDANCE: PRI.	IMPEDANCE: SEC.	CAPITAL PART No.	Merit PART No.	Stancor PART No.	Thordarson PART No.	Triad PART No.	NOTES
T2	60Ω	6-8Ω						

SPEAKER

ITEM No.	TYPE: SIZE	TYPE: FIELD	TYPE: V. C. IMP.	CAPITAL PART No.	QUAM PART No.	NOTES
SP1	2"	PM	6-8Ω			

BATTERIES

ITEM No.	VOLTAGE	CAPITAL PART No.	BURGESS "A"	BURGESS "B"	EVEREADY "A"	EVEREADY "B"	MALLORY "A"	MALLORY "B"	NOTES
M1	9V			2U6		216		M-1604	

MISCELLANEOUS

ITEM No.	PART NAME	CAPITAL PART No.	NOTES
M2	Switch		Receive-Transmit
M3	Crystal		Receive
M4	Crystal		Transmit

WIRING DATA

General-use Unshielded Hook-up Wire ..... Use BELDEN No. 8530 (Solid 22AWG)
8524 (Stranded 22AWG)
8570 (Stranded 26AWG)

Available in 12 Colors

PHOTOFACT® Folder with CIRCUITRACE™

CITI-FONE MODELS CD-6/6, CD-6/12

NOTICE

ONLY THOSE PERSONS PROPERLY LICENSED ARE PERMITTED TO MAKE REPAIRS OR ADJUSTMENTS WHICH MAY RESULT IN ILLEGAL OPERATION. (REFER TO FCC RULES & REGULATIONS PART 19, SUBPART D, SECTION 19.71.)

CITI-FONE MODELS CD-6/6, CD-6/12

TRADE NAME	Citi-Fone Models CD-6/6 CD-6/12
MANUFACTURER	Multi-Products Co., 21470 Coolidge Highway, Oak Park 37, Michigan
TYPE SET	AC-Battery Operated 9 Tube Citizens Band Transmitter-Receiver
POWER SUPPLY	110 — 120 Volts AC, 60 Cycles (or) 6 Volt Storage Battery (or) 12 Volt Storage Battery
RATING	Receive: 48 Watts, .44 Amp. @117 Volts AC; 2.8 Amp. @12.6 Volts DC; 5.6 Amp. @6.3 Volts DC Transmit: 60 Watts, .55 Amp. @117 Volts AC; 3.6 Amp. @12.6 Volts DC; 7.2 Amp. @6.3 Volts DC
TUNING RANGE	Any 5 of Citizens Band Channels 1 thru 22

ALIGNMENT INSTRUCTIONS

Suggested Alignment Tools:
A1 thru A7..... GENERAL CEMENT #8282, 8606, 8606-L, 9295, 9440
WALSCO #2526, 2543, 2544, 2545
A8, A9, A10..... GENERAL CEMENT #5000, 5003, 5066, 8271, 8272, 8276, 8277, 8290, 8609, 8722, 9150, 9298
WALSCO #2515, 2516, 2518, 2519, 2525, 2541

RECEIVER ALIGNMENT

Connect DC probe of VTVM to point (A), common to ground.

	SIGNAL GENERATOR	CHANNEL	ADJUST	REMARKS
1.	High side to pin 7 (grid) of V2, common to ground. Tune to 455KC (Unmod.).	Any	A1, A2, A3, A4, A5, A6	Adjust for maximum deflection. Repeat as required.
2.	Across antenna terminals. Tune to channel frequency.	Center Channel	A7	Adjust for maximum deflection.

TRANSMITTER ALIGNMENT

Best results will be obtained when adjusting A9 and A10 if the antenna normally used is connected to the unit and the chassis is as nearly in the cabinet as possible.

ONLY THOSE PERSONS PROPERLY LICENSED ARE PERMITTED TO MAKE REPAIRS OR ADJUSTMENTS WHICH MAY RESULT IN ILLEGAL OPERATION. (REFER TO FCC RULES & REGULATIONS PART 19, SUBPART D, SECTION 19.71)

	SPECIAL INSTRUCTIONS	INDICATOR	ADJUST	REMARKS
1.	Connect antenna or dummy load.	DC VTVM across R41 (V9 Grid).	A8	Key transmitter. Adjust for maximum deflection.
2.	"	RF wattmeter or field strength meter.	A9, A10	Key transmitter. Adjust for maximum output.

HOWARD W. SAMS & CO., INC. Indianapolis 6, Indiana

LY766

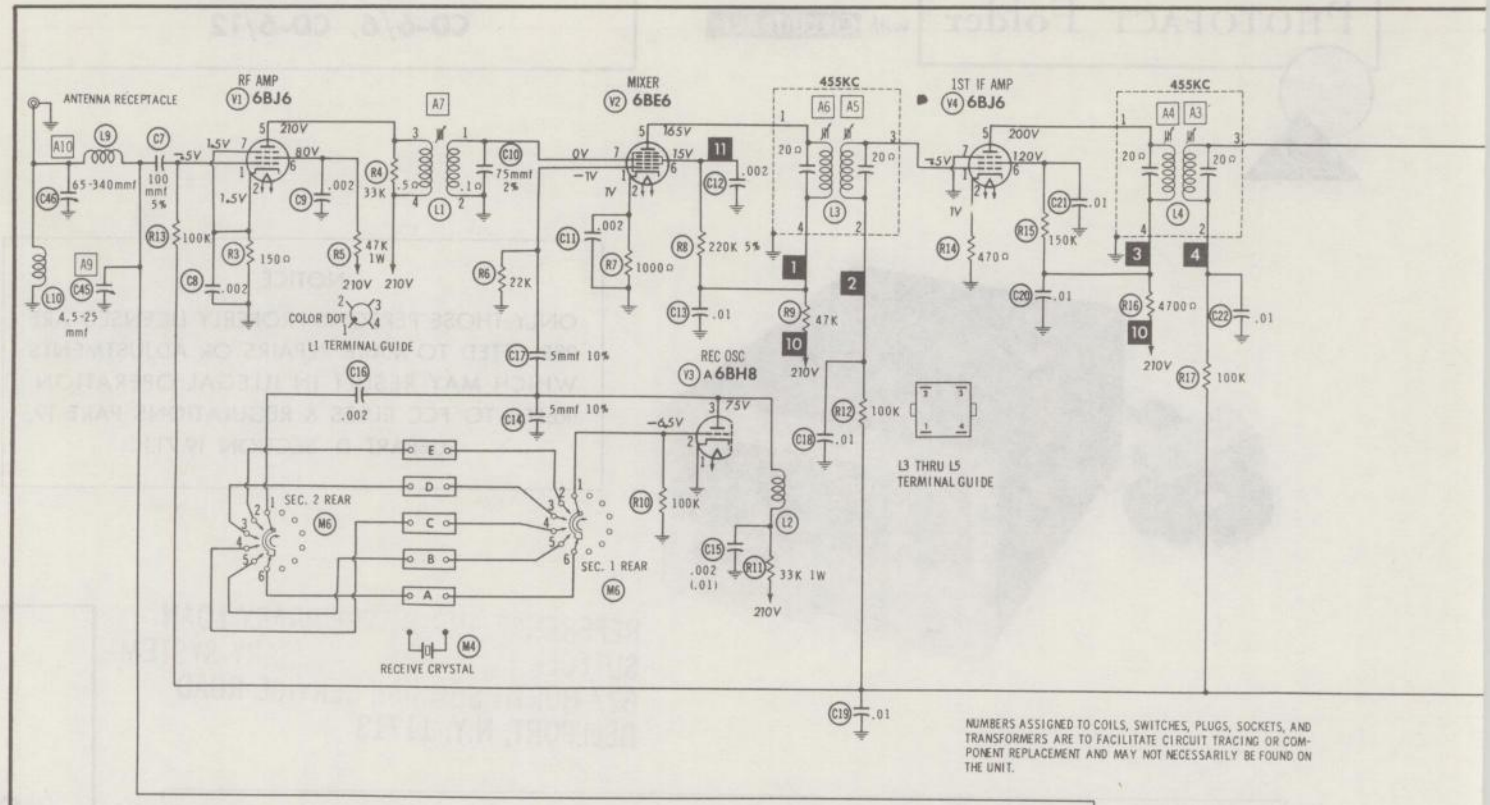

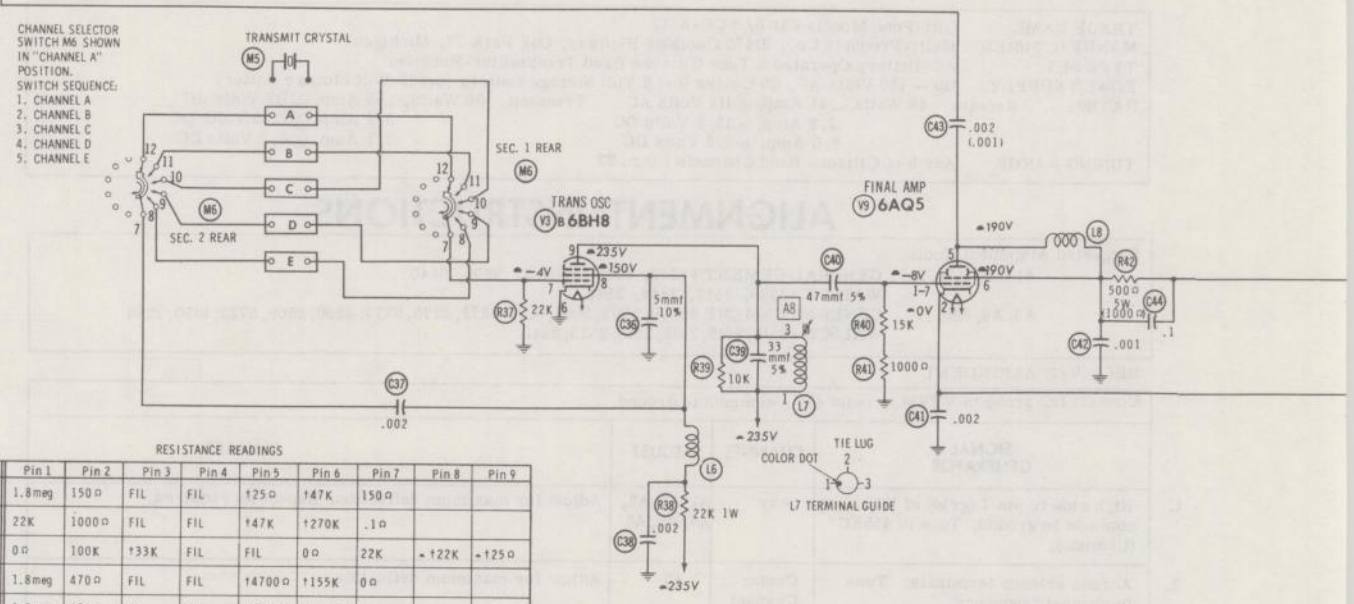

RESISTANCE READINGS

ITEM	TUBE	Pin 1	Pin 2	Pin 3	Pin 4	Pin 5	Pin 6	Pin 7	Pin 8	Pin 9
V1	6BJ6	1.8meg	150Ω	FIL	FIL	†25Ω	†47K	150Ω		
V2	6BE6	22K	1000Ω	FIL	FIL	†47K	†270K	.1Ω		
V3	6BH8	0Ω	100K	†33K	FIL	FIL	0Ω	22K	▬†22K	▬†25Ω
V4	6BJ6	1.8meg	470Ω	FIL	FIL	†4700Ω	†155K	0Ω		
V5	6BJ6	1.8meg	470Ω	FIL	FIL	†4700Ω	†155K	0Ω		
V6	6AL5	2.7meg	700K	FIL	FIL	0Ω	0Ω	470K		
V7	6AN8	†3.4meg	2.9meg	5000Ω	FIL	FIL	†220K	†1meg	†6.7meg	15K
V8	6AQ5	470K	220Ω	FIL	FIL	†325Ω	†25Ω	470K		
V9	6AQ5	16K	▬0Ω	FIL	FIL	†825Ω	†825Ω	16K		

ALL READINGS MADE IN "RECEIVE" POSITION UNLESS OTHERWISE DESIGNATED.
▬ TAKEN IN "TRANSMIT" POSITION. † MEASURED FROM JUNCTION OF X1 AND X3.

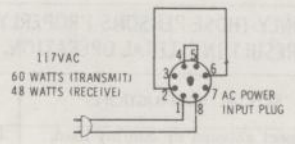

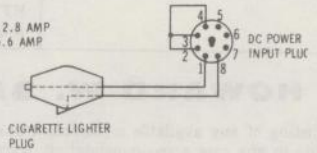

● SEE PARTS LIST FOR ALTERNATE VALUE OR APPLICATION

1. DC voltage measurements taken with vacuum tube voltmeter; AC voltages measured with 1000 ohm per volt voltmeter.
2. Socket connections are shown as bottom views.
3. Measured values are from socket pin to common ground.
4. Line voltage maintained at 117 volts for voltage readings.
5. Nominal tolerance of component values makes possible a variation of ±15% in voltage and resistance readings.

A PHOTOFACT STANDARD NOTATION SCHEMATIC with CIRCUITRACE

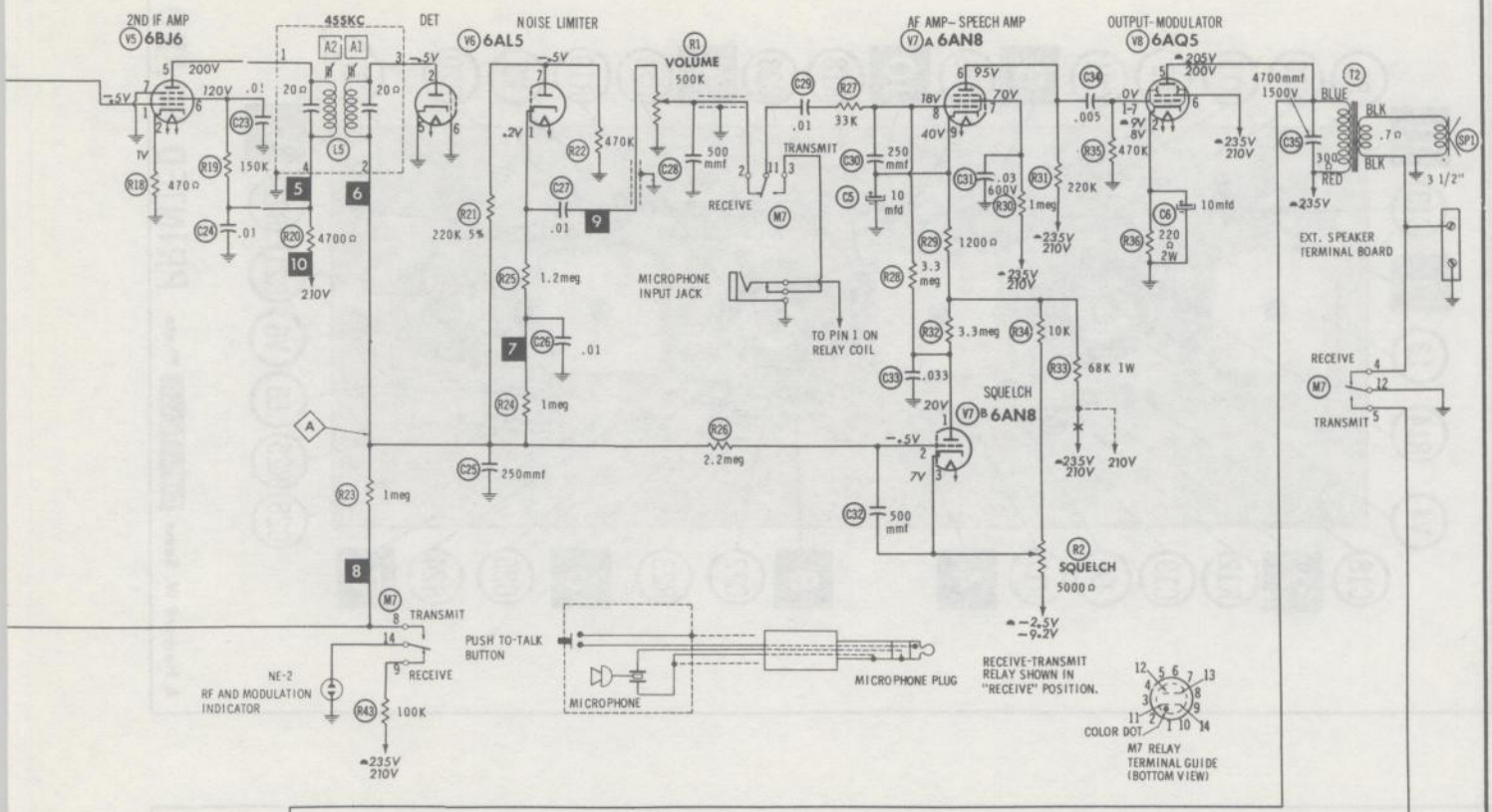

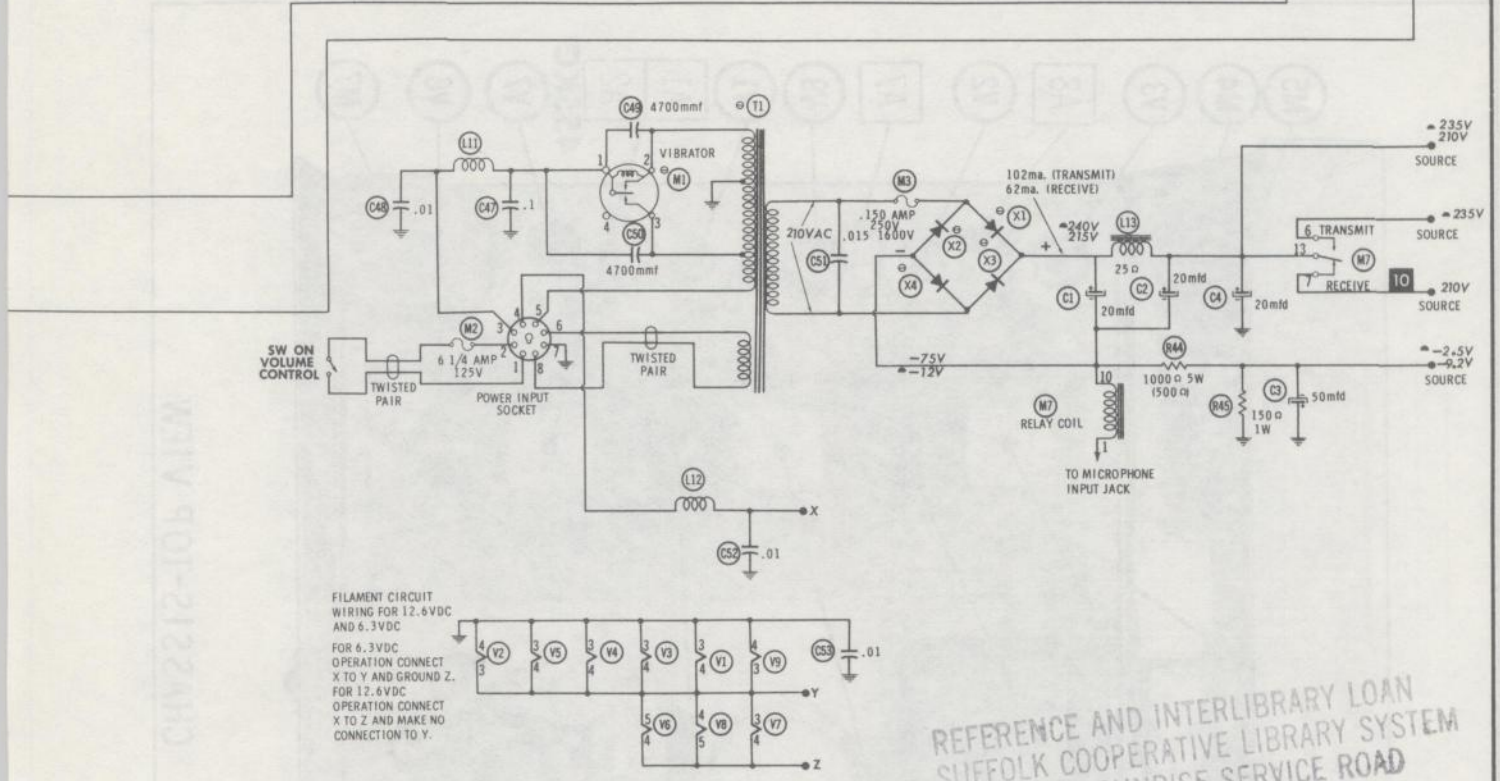

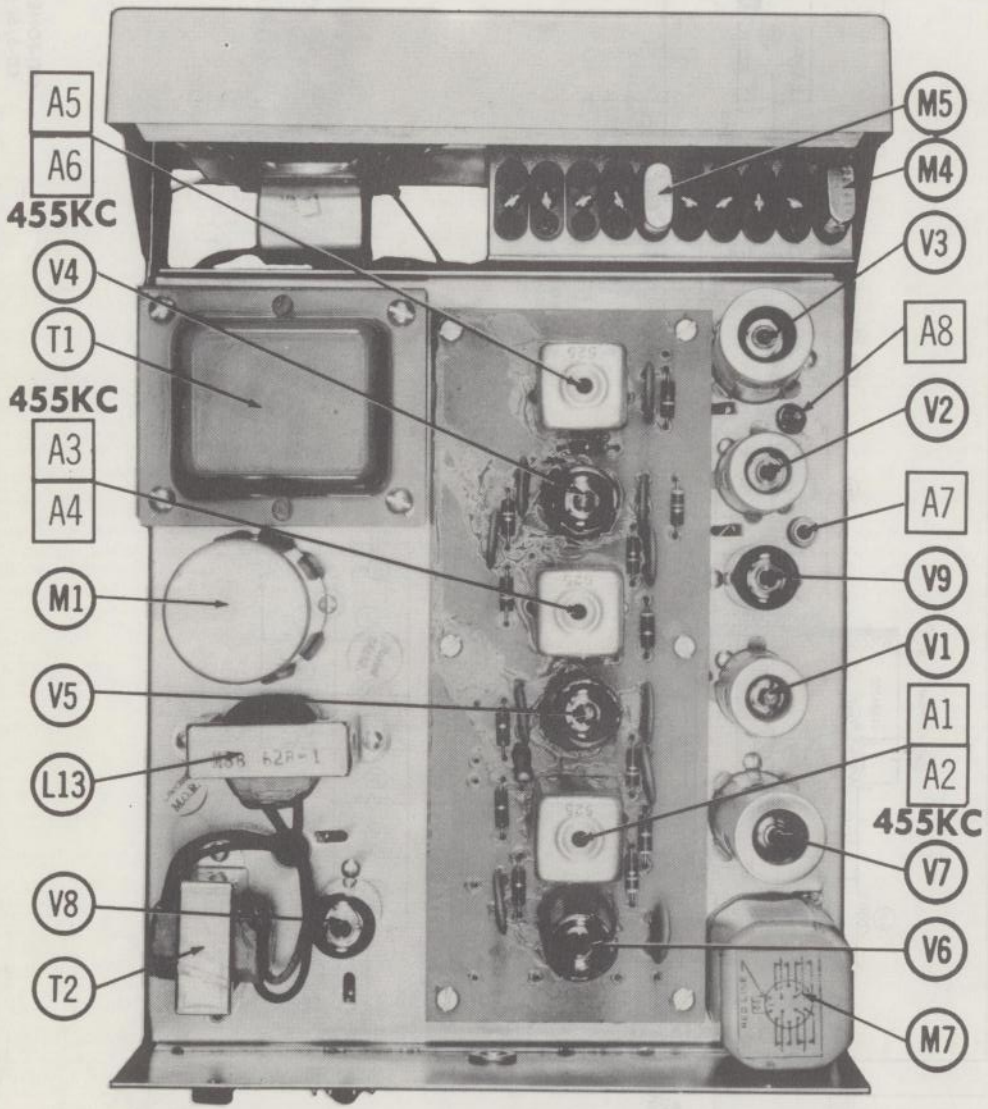

CHASSIS-TOP VIEW

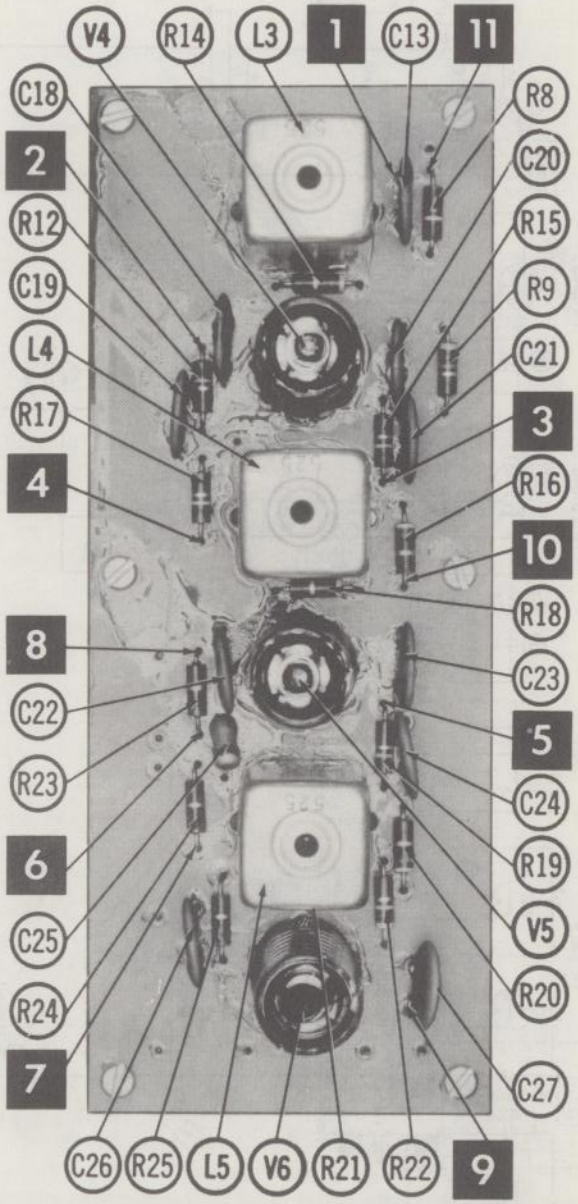

A Howard W. Sams CIRCUITRACE Photo PRINTED BOARD

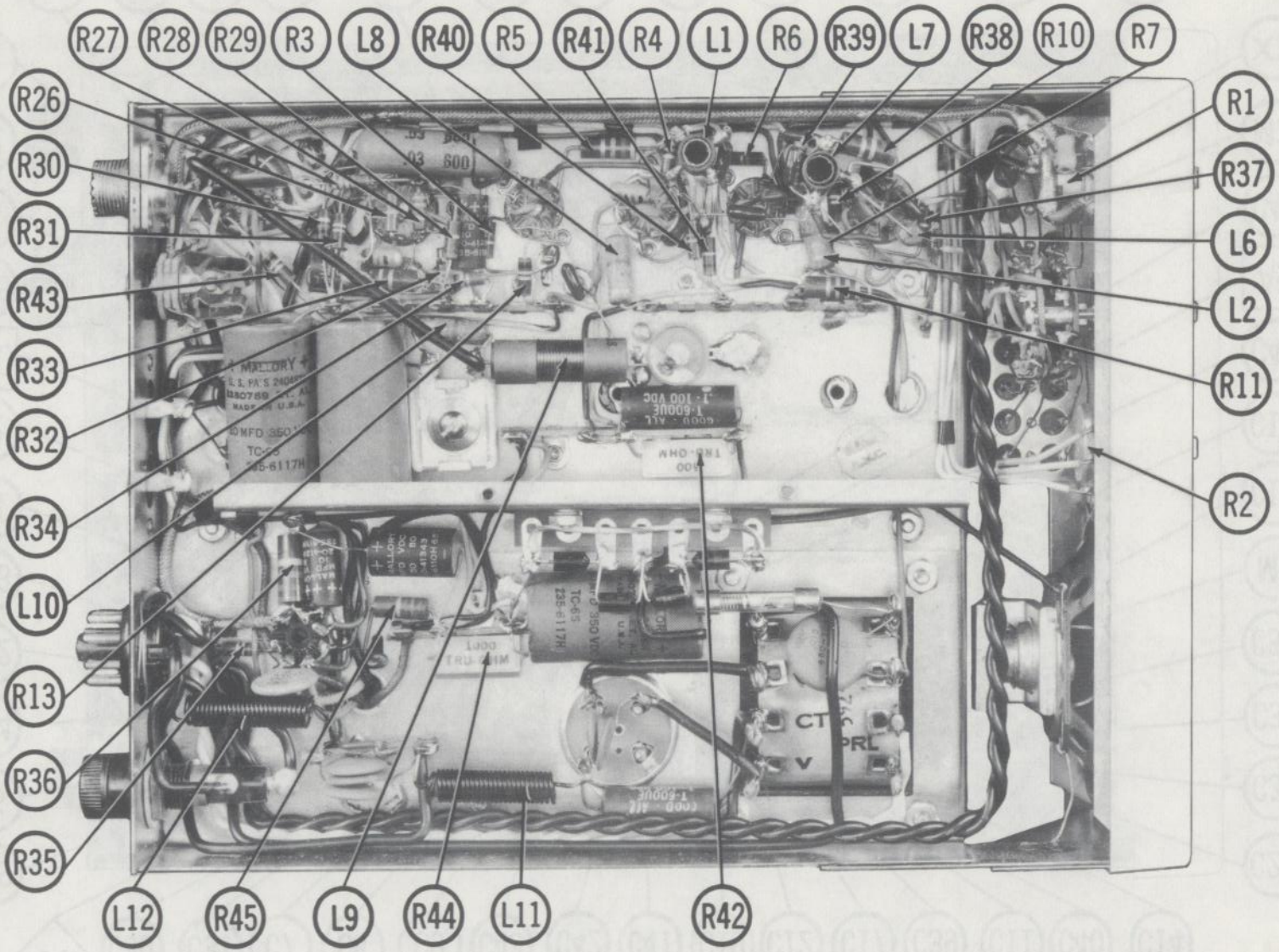

CHASSIS BOTTOM VIEW-RESISTOR & INDUCTOR IDENT.

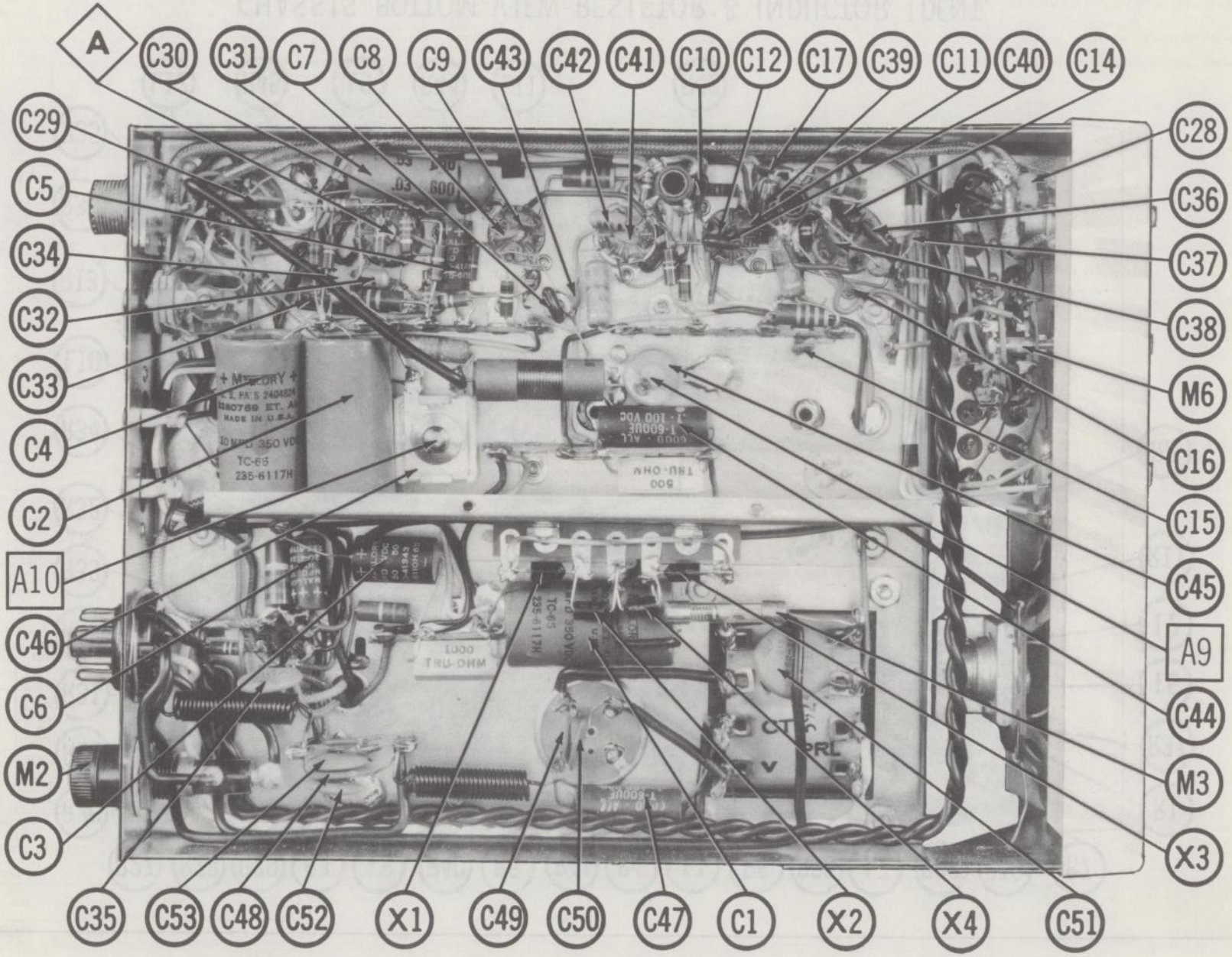

CHASSIS BOTTOM VIEW-ALIGNMENT, CAPACITOR & MISC. IDENT.

PARTS LIST AND DESCRIPTION

TUBES

ITEM No.	USE	TYPE (AMPEREX / GENERAL ELECTRIC / RCA / RAYTHEON / SYLVANIA)
V1	RF Amplifier	6BJ6
V2	Mixer	6BE6
V3	Receive Osc.-Trans. Osc.	6BH8
V4	1st IF Amplifier	6BJ6
V5	2nd IF Amplifier	6BJ6
V6	Det.-Noise Limiter	6AL5
V7	AF Amp.-Speech Amp.-Squelch	6AN8
V8	Output-Modulator	6AQ5
V9	Final Amp.	6AQ5

POWER RECTIFIERS & SIGNAL DIODES

ITEM No.	CURRENT RATING (Measured)	ORIGINAL Part or Type No.	RECTIFIERS: RCA PART No.	RECTIFIERS: SARKES TARZIAN PART No.	DIODES	NOTES
X1	.102A	1N2070*	1N3194	2F4		* HV Rectifier. Alternate 2E4
X2	.102A	1N2070*	1N3194	2F4		
X3	.102A	1N2070*	1N3194	2F4		
X4	.102A	1N2070*	1N3194	2F4		

ELECTROLYTIC CAPACITORS

ITEM No.	RATING: CAP.	RATING: VOLT.	Citi-Fone PART No.	AEROVOX PART No.	CORNELL-DUBILIER PART No.	GENERAL ELECTRIC PART No.	MALLORY PART No.	PYRAMID PART No.	SPRAGUE PART No.
C1	20	350		PRS1735	BR20-350	QT1-9	TC-65	TD-20-350	TVA-1608
C2	20	350		PRS1735	BR20-350	QT1-9	TC-65	TD-20-350	TVA-1608
C3	50	50		PTT98	NLW50-50	MT1-17	TT50X50	MLV50-50	TE-1307
C4	20	350		PRS1735	BR20-350	QT1-9	TC-65	TD-20-350	TVA-1608
C5	10	50		PTT92	NLW10-50	MT1-6	TT50X10	MLV10-50	TE-1304
C6	10	50		PTT92	NLW10-50	MT1-6	TT50X10	MLV10-50	TE-1304

FIXED CAPACITORS

ITEM No.	RATING	REMARKS	AEROVOX PART No.	CENTRALAB PART No.	CORNELL-DUBILIER PART No.	ELMENCO PART No.	MALLORY PART No.	SPRAGUE PART No.
C7	100 5%		ADM-15-101	DTZ-100	22R5T1	DM-15-101J	MCE-235	10TCC-T10
C8	.002		BPD-002	DD-202	L10D2	CCD-202	GP220	10TS-D20
C9	.002		BPD-002	DD-202	L10D2	CCD-202	GP220	10TS-D20
C10	75 2%		ADM-15-750	DTZ-75	22R5Q75	DM-15-750G	MCE-230	
C11	.002		BPD-002	DD-202	L10D2	CCD-202	GP220	10TS-D20
C12	.002		BPD-002	DD-202	L10D2	CCD-202	GP220	10TS-D20
C13	.01		BPD-01	DD-103	BYA10S1	CCD-103	GP110	10TS-S10
C14	5 10%		ADM-15-050	DTZ-5	L10V5	CCD-050	GP550	10TS-V50
C15	.002	(.01) †	BPD-002	DD-202	L10D2	CCD-202	GP220	10TS-D20
C16	.002		BPD-002	DD-202	L10D2	CCD-202	GP220	10TS-D20
C17	5 10%		ADM-15-050	DTZ-5	L10V5	CCD-050	GP550	10TS-V50
C18	.01		BPD-01	DD-103	BYA10S1	CCD-103	GP110	10TS-S10
C19	.01		BPD-01	DD-103	BYA10S1	CCD-103	GP110	10TS-S10
C20	.01		BPD-01	DD-103	BYA10S1	CCD-103	GP110	10TS-S10
C21	.01		BPD-01	DD-103	BYA10S1	CCD-103	GP110	10TS-S10
C22	.01		BPD-01	DD-103	BYA10S1	CCD-103	GP110	10TS-S10
C23	.01		BPD-01	DD-103	BYA10S1	CCD-103	GP110	10TS-S10
C24	.01		BPD-01	DD-103	BYA10S1	CCD-103	GP110	10TS-S10
C25	250		CI-250	DTZ-250	L10T25	CCD-251	GP325	10TS-T25
C26	.01		BPD-01	DD-103	BYA10S1	CCD-103	GP110	10TS-S10
C27	.01		BPD-01	DD-103	BYA10S1	CCD-103	GP110	10TS-S10
C28	500		CI-500	DD-501	L10T5	CCD-501	GP350	10TS-T50
C29	.01		BPD-01	DD-103	BYA10S1	CCD-103	GP110	10TS-S10
C30	250		CI-250	DD-251	L10T25	CCD-251	GP325	10TS-T25
C31	.03 600V		P688N-03	DD-303	BYB6S3	CCD-303	GP130	6PS-S30
C32	500		CI-500	DD-501	L10T5	CCD-501	GP350	10TS-T50
C33	.033 100V		P288N-033	DD-303	BYB6S3	CCD-303	GP130	4PS-S33

FIXED CAPACITORS (cont)

ITEM No.	RATING	REMARKS	AEROVOX PART No.	CENTRALAB PART No.	CORNELL-DUBILIER PART No.	ELMENCO PART No.	MALLORY PART No.	SPRAGUE PART No.
C34	500		CI-500	DD-501	L10T5	CCD-501	GP350	10TS-T50
C35	4700 1500V		DAC-0047	DD16-502	HVE16 D47	3CCD-502	2HV-247	30GA-D47
C36	5 10%		ADM-15-050	DD-050	L10V5	CCD-050	GP550	10TS-V50
C37	.002		BPD-002	DD-202	L10D2	CCD-202	GP220	10TS-D20
C38	.002		BPD-002	DD-202	L10D2	CCD-202	GP220	10TS-D20
C39	33 5%		ADM-15-330	DTZ-33	22R5Q33	DM-15-330J		MS-433
C40	47 5%		ADM-15-470	DTZ-47	22R5Q47	DM-15-470J		MS-447
C41	.002		BPD-002	DD-202	L10D2	CCD-202	GP220	10TS-D20
C42	.001		BPD-001	DD-102	L10D1	CCD-102	GP210	10TS-D10
C43	.002	(.001) †	BPD-002	DD-202	L10D2	CCD-202	GP220	10TS-D20
C44	.1 100V		P288N-1	DF-104	CUB2P1	1DP-2-104	GEM-201	5GAB-P10
C45	4.5 -25			822-AZ				
C46	65-340					303		
C47	.1 100V		P288N-1	DF-104	CUB2P1	1DP-2-104	GEM-201	5GAB-P10
C48	.01		BPD-01	DD-103	BYA10S1	CCD-103	GP110	10TS-S10
C49	4700		BPD-0047	DD-472	L10D47	CCD-472	GP247	10TS-D47
C50	4700		BPD-0047	DD-472	L10D47	CCD-472	GP247	10TS-D47
C51	.015 1600V			DD16-153	HVE16S15		2HV-110	30GA-S10
C52	.01		BPD-01	DD-103	BYA10S1	CCD-103	GP110	10TS-S10
C53	.01		BPD-01	DD-103	BYA10S1	CCD-103	GP110	10TS-S10

† Alternate Value.

CONTROLS

All wattages 1/2 watt, or less, unless otherwise listed.

ITEM No.	USE	RESISTANCE	Citi-Fone PART No.	CENTRALAB PART No.	CLAROSTAT PART No.	CTS-IRC PART No.	MALLORY PART No.
R1	Volume & Switch	500K	(713)	B-60-S or (F2-500K, KR-1, AK-31, SU204)	A47-500K-Z, SWE-12, FS-3	BU2, CF25, SS1, GC	UA55A, US-41, SF1000
R2	Squelch	5000Ω	(714)	B-10 or (F1-5000, SU204)	A47-5000-S, FS-3	BU2, CF8, SS1, DC1	FA53L, SF1000

RESISTORS

All wattages 1/2 watt, or less, unless otherwise listed.

ITEM No.	RATING	REPLACEMENT DATA: IRC PART No.	WORKMAN PART No.	REMARKS
R3	150Ω			
R4	33K			
R5	47K 1W			
R6	22K			
R7	1000Ω			
R8	220K 5%			
R9	47K			
R10	100K			
R11	33K 1W			
R12	100K			
R13	100K			
R14	470Ω			
R15	150K			
R16	4700Ω			
R17	100K			
R18	470Ω			
R19	150K			
R20	4700Ω			
R21	220K 5%			
R22	470K			
R23	1meg			
R24	1meg			

ITEM No.	RATING	REPLACEMENT DATA: IRC PART No.	WORKMAN PART No.	REMARKS
R25	1.2meg			
R26	2.2meg			
R27	33K			
R28	3.3meg			
R29	1200Ω			
R30	1meg			
R31	220K			
R32	3.3meg			
R33	68K 1W			
R34	10K			
R35	470K			
R36	220K 2W			
R37	22K			
R38	22K 1W			
R39	10K			
R40	15K			
R41	1000Ω			
R42	500Ω 5W	PW5-500	5W-SQ-500	(1000Ω)†
R43	100K			
R44	1000Ω 5W	PW5-1000	5W-SQ-1000	(500Ω) †
R45	150Ω 1W			

† Alternate Value.

PARTS LIST AND DESCRIPTION (CONTINUED)

COILS (RF-IF)

ITEM No.	USE	REPLACEMENT DATA					NOTES
		Citi-Fone PART No.	Merit PART No.	Miller PART No.	Stancor PART No.	Workman PART No.	
L1	RF Trans.	602					
L2	RF Choke (7.5uh)		BC-565	70F756A1	RTC-8520	T960	
L3	1st IF	525					
L4	2nd IF	525					
L5	3rd IF	525					
L6	RF Choke (7.5uh)		BC-565	70F756A1	RTC-8520	T960	
L7	Trans. Osc. Plate	604		4202			
L8	RF Choke (7.5uh)		BC-565	70F756A1	RTC-8520	T960	
L9	Final Tank	718		70F186A1			
L10	Ant. Load(7.5uh)		BC-565	70F756A1	RTC-8520	T960	
L11	Hash Choke(10uh)		BC-537	5220	RTC-9182	T980	
L12	Filament Choke (10uh)		BC-537	5220	RTC-9182	T980	

FILTER CHOKE

ITEM No.	RATINGS			REPLACEMENT DATA					NOTES
	CURRENT (Measured)	DC RES.	INDUCTANCE (0 CURRENT 1000~)	Citi-Fone PART No.	MERIT PART No.	STANCOR PART No.	THORDARSON PART No.	TRIAD PART No.	
L13	.102A	25Ω	650 MH	(M88.628-1)					

TRANSFORMER (POWER)

ITEM No.	RATING			REPLACEMENT DATA					NOTES
	PRI.	SEC. 1	SEC. 2	Citi-Fone PART No.	MERIT PART No.	STANCOR PART No.	THORDARSON PART No.	TRIAD PART No.	
T1	117VAC @ .55A or 12.6VDC @ 3.6A	210VAC @ .170A AC	12.6VAC @ 1.4A	592 *					* Part #591 used in 6V Version.

TRANSFORMER (AUDIO OUTPUT)

ITEM No.	IMPEDANCE		REPLACEMENT DATA					NOTES
	PRI.	SEC.	Citi-Fone PART No.	Merit PART No.	Stancor PART No.	Thordarson PART No.	Triad PART No.	
T2	5000Ω	3-4Ω	121-A6	A-3026	A-3877①	24S51①	S-6Z	① Drill new mtg. hole(s)

SPEAKER

ITEM No.	TYPE			REPLACEMENT DATA		NOTES
	SIZE	FIELD	V. C. IMP.	Citi-Fone PART No.	QUAM PART No.	
SP1	3½"	PM	3-4Ω	5531	3A07	

VIBRATOR

ITEM No.	TYPE	INPUT VOLTS	FRE-QUENCY	REPLACEMENT DATA			NOTES
				Citi-Fone PART No.	CORNELL-DUBILIER PART No.	MALLORY PART No.	
M1	Interrupter Interrupter	12V 6V	115~ 115~		G8801 5301	G1601 1601	Model CD 6/12 Model CD 6/6

FUSES

ITEM No.	TYPE	RATING	REPLACEMENT DATA					
			Citi-Fone PART No.		LITTELFUSE PART No.		BUSS PART No.	
			FUSE	HOLDER	FUSE	HOLDER	FUSE	HOLDER
M2	Slo-Blo	6 1/4A 125V			3136.25 (6 1/4A 125V S/B)	342014	MDX 6 1/4	HKP
M3	Slo-Blo	.150A 250V			315.150 (.15A 250V S/B)		MDV 15/100	

MISCELLANEOUS

ITEM No.	PART NAME	Citi-Fone PART No.	NOTES
M4	Crystal		Receive (Specify Channel and Frequency Desired)
M5	Crystal		Transmit (Specify Channel and Frequency Desired)
M6	Switch		Channel Selector
M7	Relay		Receive-Transmit

WIRING DATA

General-use Hook-up Wire .... Use BELDEN No. 8530 (Solid) Available in 12 Colors
8524 (Stranded) Available in 12 Colors
Shielded Antenna Lead ..... Use BELDEN No. 8214 Lowest Loss (RG-8/U Type)
8237 Low Loss (RG-8/U)
8240 (Solid) Miniature (RG-58/U)
8259 (Stranded) Miniature (RG-58A/U)
Coiled Microphone Cable ..... Use BELDEN No. 8497 3 Conductor-1 Shielded for Press-to-Talk (Neoprene)
8496 3 Conductor-1 Shielded for Press-to-Talk (Vinyl)
Ignition Noise Suppression .... Use BELDEN No. 7300-Series Spark-Plug Sets
Bonding Strap ..... Use BELDEN No. 8661 (3/8 In.)

PHOTOFACT® Folder with CIRCUITRACE™

EICO MODELS 770, 770W

EICO MODELS 770, 770W

TRADE NAME	Eico Models 770, 770W
MANUFACTURER	Electronic Instrument Co., 3300 Northern Blvd., Long Island City 1, N. Y.
TYPE SET	AC Operated 8 Tube Citizens Band Transmitter-Receiver
POWER SUPPLY	110 — 120 Volts AC, 60 Cycles RATING 54 Watts, .50 Amp. @117 Volts AC (Receive) 52 Watts, .48 Amp. @117 Volts AC (Transmit)
FREQ. RANGE	RECEIVER: Any one crystal controlled Citizens Band Channels 1 thru 23 or continuous manual tuning. TRANSMITTER: Any four Citizens Band Channels 1 thru 23

NOTICE

ONLY THOSE PERSONS PROPERLY LICENSED ARE PERMITTED TO MAKE REPAIRS OR ADJUSTMENTS WHICH MAY RESULT IN ILLEGAL OPERATION. (REFER TO FCC RULES & REGULATIONS PART 19, SUBPART D, SECTION 19.71.)

HOWARD W. SAMS & CO., INC. Indianapolis 6, Indiana

LY662

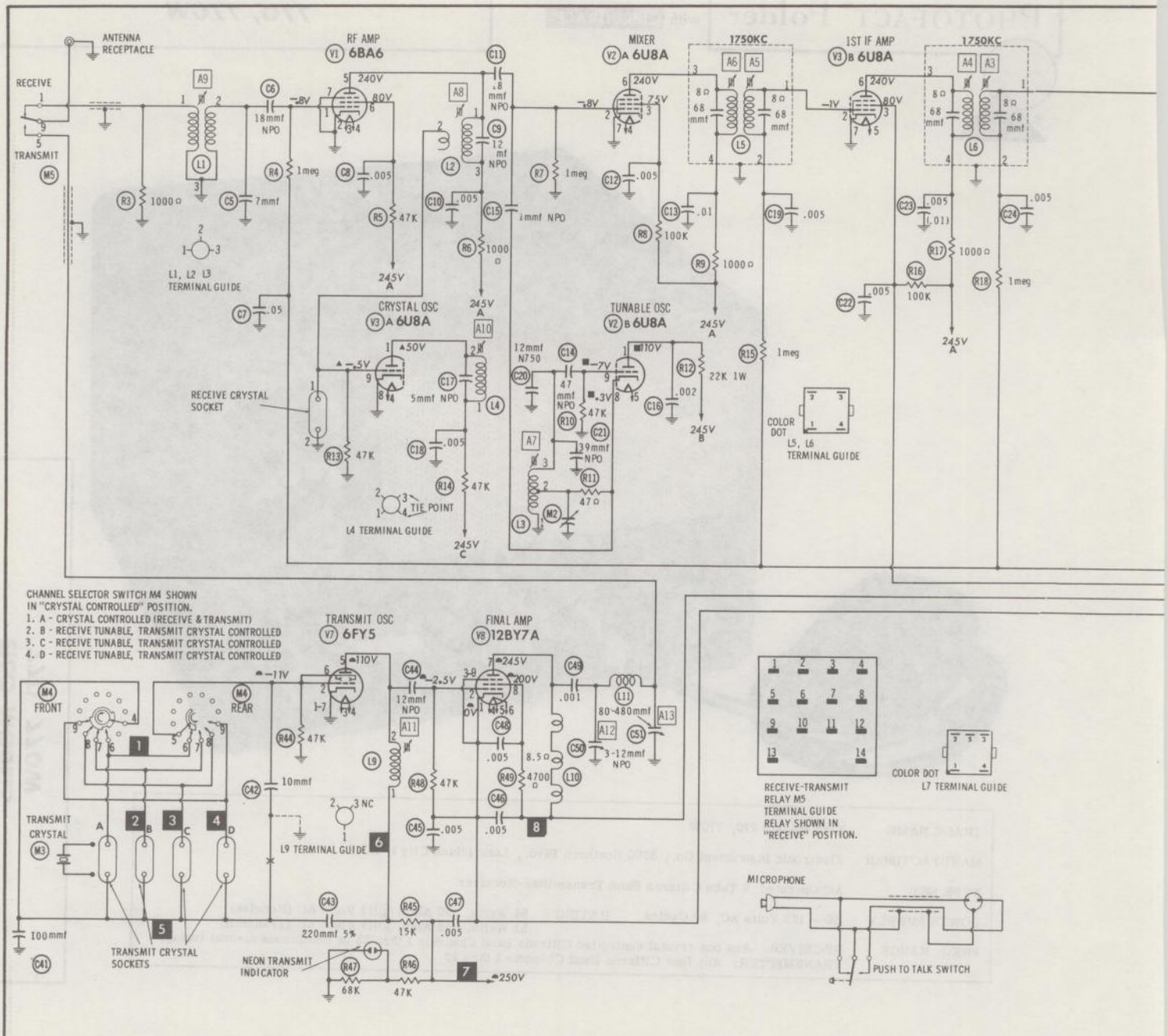

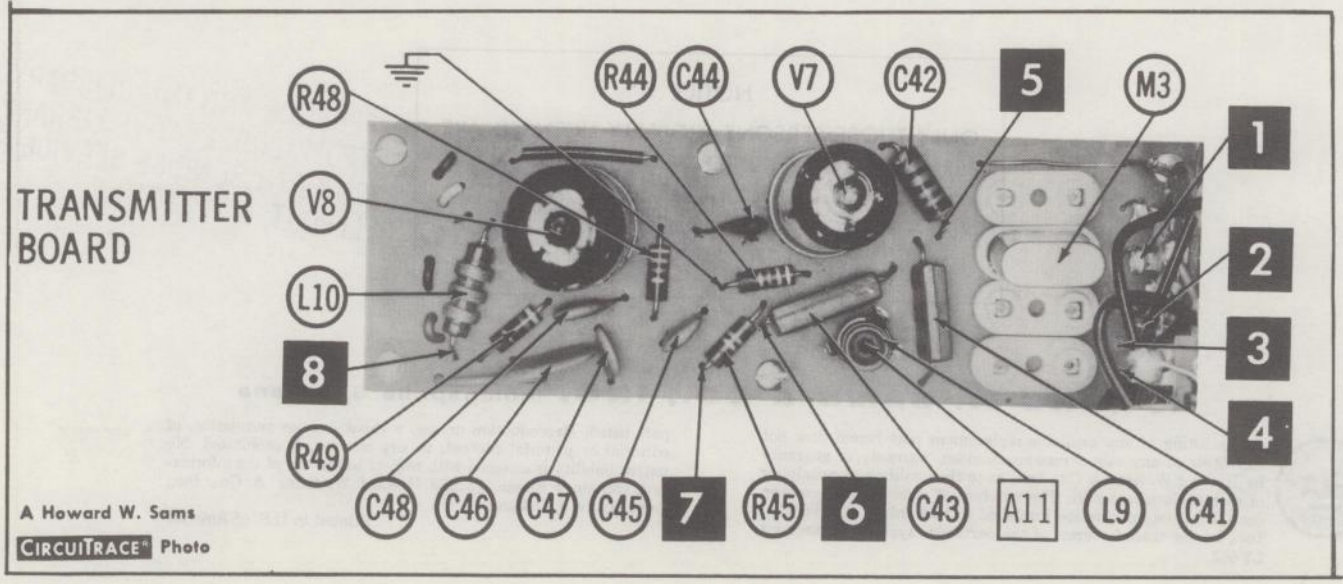

A Howard W. Sams CIRCUITRACE® Photo

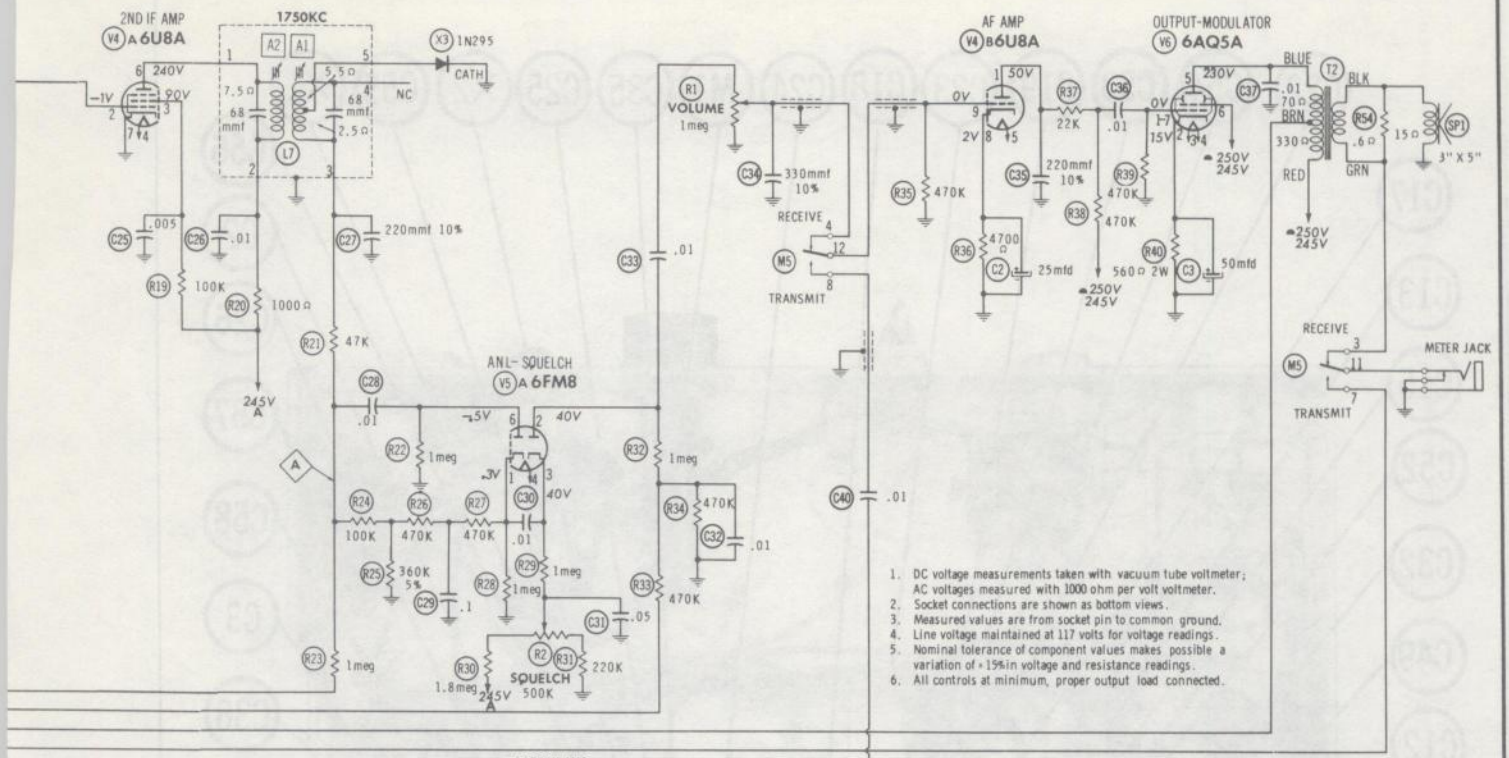

1. DC voltage measurements taken with vacuum tube voltmeter; AC voltages measured with 1000 ohm per volt voltmeter.
2. Socket connections are shown as bottom views.
3. Measured values are from socket pin to common ground.
4. Line voltage maintained at 117 volts for voltage readings.
5. Nominal tolerance of component values makes possible a variation of ±15% in voltage and resistance readings.
6. All controls at minimum, proper output load connected.

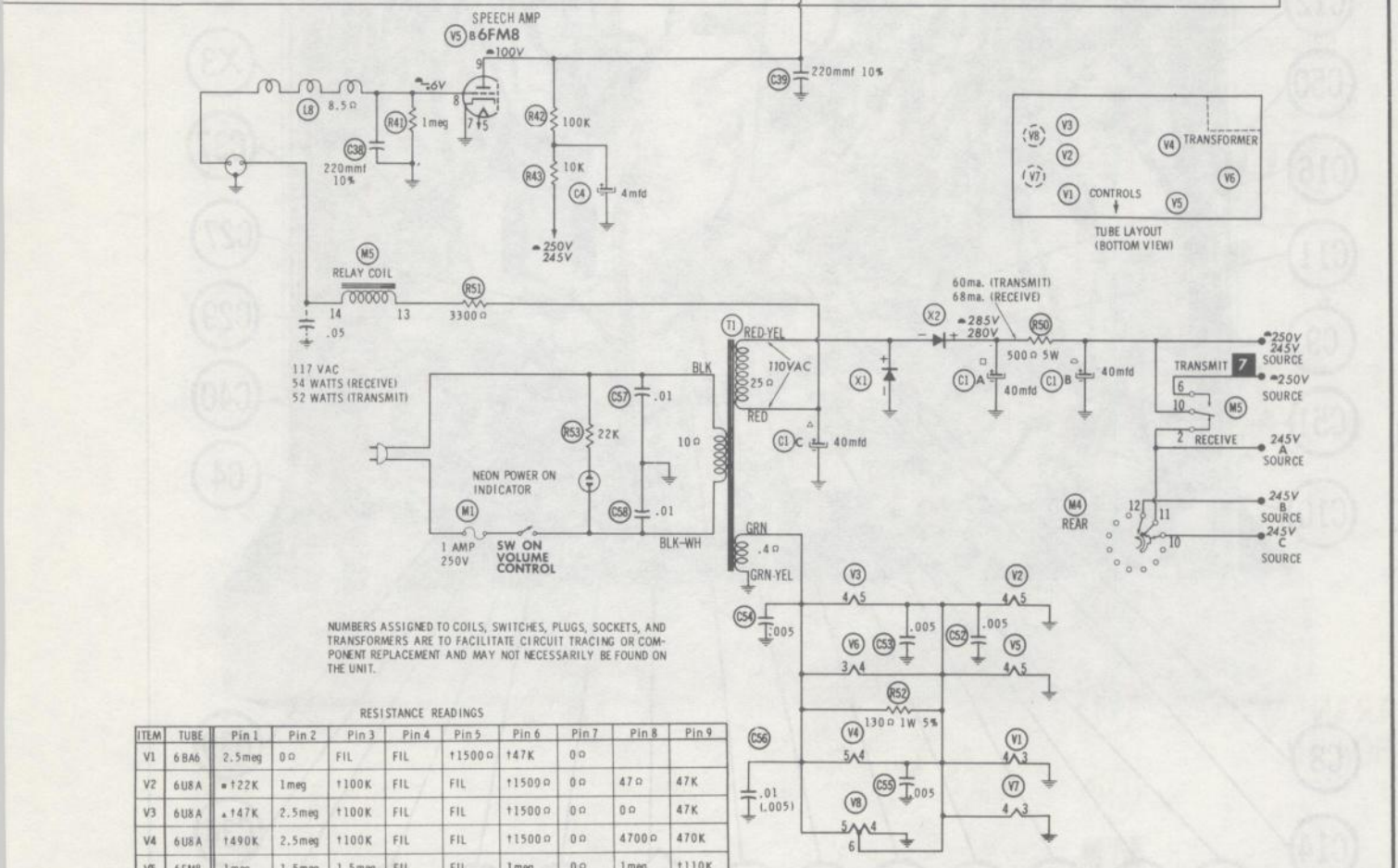

NUMBERS ASSIGNED TO COILS, SWITCHES, PLUGS, SOCKETS, AND TRANSFORMERS ARE TO FACILITATE CIRCUIT TRACING OR COMPONENT REPLACEMENT AND MAY NOT NECESSARILY BE FOUND ON THE UNIT.

RESISTANCE READINGS

ITEM	TUBE	Pin 1	Pin 2	Pin 3	Pin 4	Pin 5	Pin 6	Pin 7	Pin 8	Pin 9
V1	6BA6	2.5meg	0Ω	FIL	FIL	†1500Ω	†47K	0Ω		
V2	6U8A	▪†22K	1meg	†100K	FIL	FIL	†1500Ω	0Ω	47Ω	47K
V3	6U8A	▲†47K	2.5meg	†100K	FIL	FIL	†1500Ω	0Ω	0Ω	47K
V4	6U8A	†490K	2.5meg	†100K	FIL	FIL	†1500Ω	0Ω	4700Ω	470K
V5	6FM8	1meg	1.5meg	1.5meg	FIL	FIL	1meg	0Ω	▲1meg	†110K
V6	6AQ5A	470K	560Ω	FIL	FIL	†900Ω	†500Ω	470K		
V7	6FY5	0Ω	47K	FIL	FIL	▪†15K	47K	0Ω		
V8	12BY7A	▪0Ω	▪47K	▪0Ω	FIL	FIL	FIL	†830Ω	†5500Ω	▪0Ω

ALL MEASUREMENTS TAKEN IN "RECEIVE" POSITION UNLESS OTHERWISE DESIGNATED.
† MEASURED FROM OUTPUT OF X2.
▪ TAKEN IN "TRANSMIT" POSITION.
■ TAKEN IN SWITCH POSITION B, C OR D.
▲ TAKEN IN SWITCH POSITION A WITHOUT RECEIVE CRYSTAL.

EICO MODELS 770, 770W

A PHOTOFACT STANDARD NOTATION SCHEMATIC with CIRCUITRACE

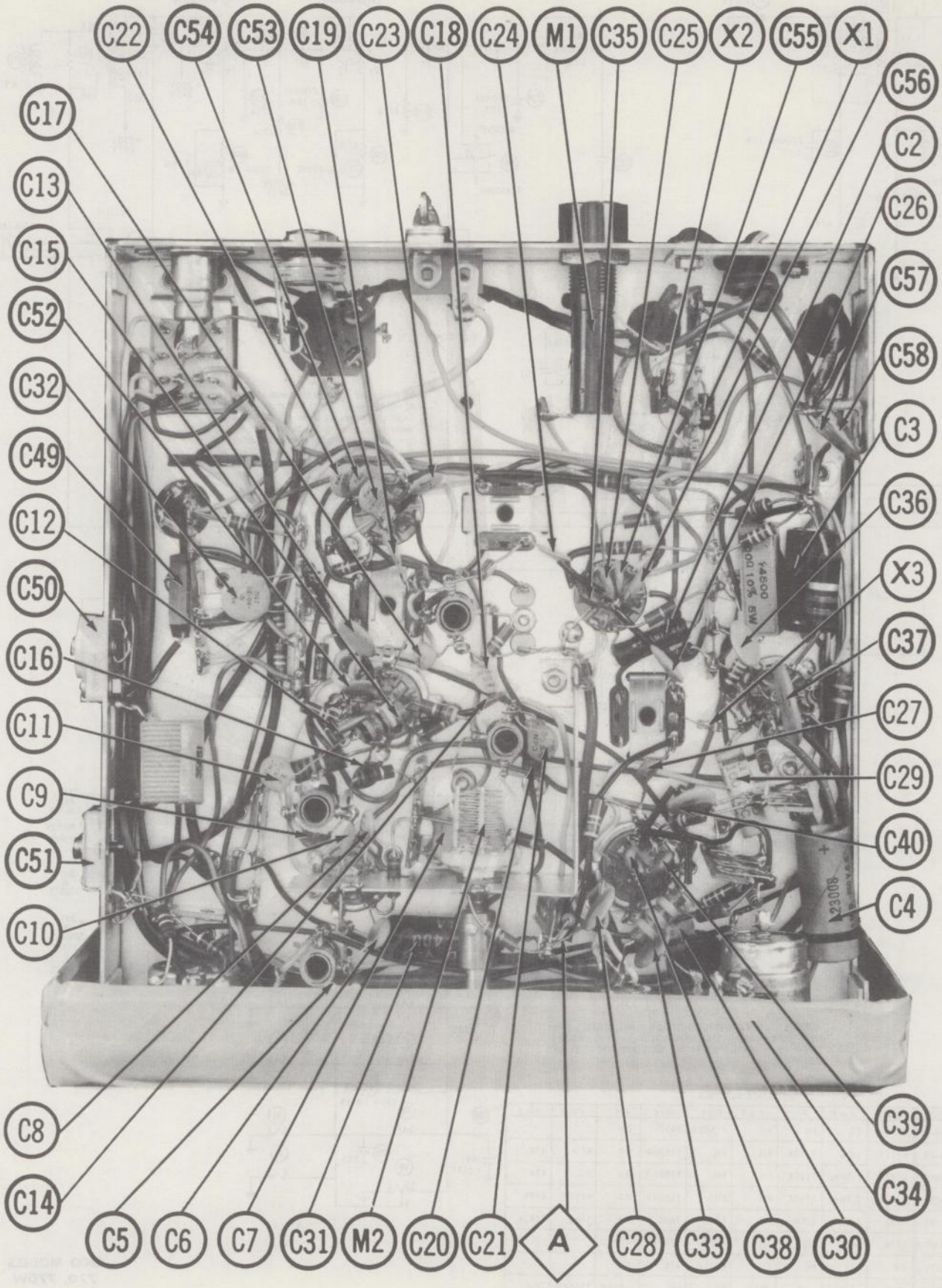

CHASSIS BOTTOM VIEW — CAPACITOR & MISC. IDENT.

ALIGNMENT INSTRUCTIONS

ALIGNMENT INSTRUCTIONS—READ CAREFULLY BEFORE ATTEMPTING ALIGNMENT

Best results will be obtained when adjusting A9, A12, and A13 if the antenna normally used is connected and the unit is as nearly in the cabinet as possible.

Suggested Alignment Tools:

A1 thru A11.....GENERAL CEMENT #8282, 8606, 8606-L, 9295, 9440
WALSCO #2526, 2543, 2544, 2545

A12, A13.....GENERAL CEMENT #5000, 5003, 5066, 8271, 8272, 8276, 8277, 8290, 8609, 8722, 9150, 9298
WALSCO #2515, 2516, 2518, 2519, 2525, 2541

RECEIVER ALIGNMENT

Connect DC VTVM between point Ⓐ and ground.

	SIGNAL GENERATOR	CHANNEL	ADJUST	REMARKS
1.	High side thru .001mfd to pin 2 (grid) of mixer, common to chassis. Tune to 1750KC (Unmod.)	Any	A1, A2, A3, A4, A5, A6	Adjust for maximum deflection.
2.	High side to antenna terminal, common to chassis. Tune to Channel Frequency (Unmod.)	11 (27.085MC)	A7, A8, A9	"
3.	Not Used.		A10	Place channel selector switch in position 1. Be sure crystal is installed. (Receiver section). Connect DC VTVM between Pin 9 of V3 and ground. Adjust A10 for maximum deflection. Rock A10 to each side of peak, noting rate of dropoff. Set A10 just below peak on side of gradual dropoff.

TRANSMITTER ALIGNMENT

ONLY THOSE PERSONS PROPERLY LICENSED ARE PERMITTED TO MAKE REPAIRS OR ADJUSTMENTS WHICH MAY RESULT IN ILLEGAL OPERATION. (REFER TO FCC RULES & REGULATIONS PART 19, SUBPART D, SECTION 19.71)

	SPECIAL INSTRUCTIONS	INDICATOR	ADJUST	REMARKS
1.	Place channel switch on or near the center most channel.	Connect dummy load and RF Wattmeter to antenna terminal.	A11	Connect DC VTVM between Pin 2 of V8 and ground. Rock A11 to each side of peak, noting rate of dropoff. Set A11 just below peak on side of gradual dropoff.
2.	"	"	A12, A13	Adjust for maximum output.
3.	"	Field Strength Meter.		Connect antenna to unit and readjust A12, A13 for maximum output.

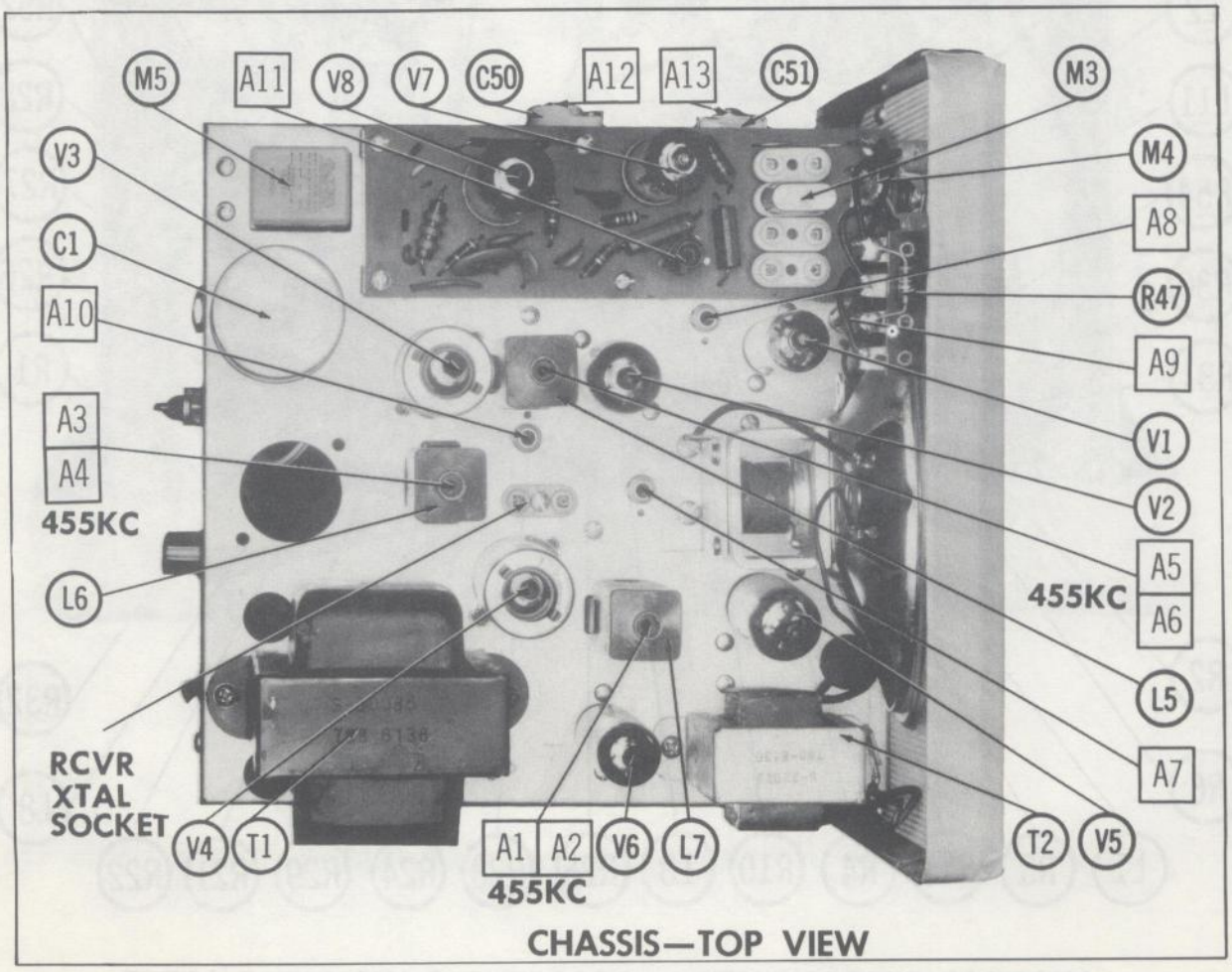

CHASSIS—TOP VIEW

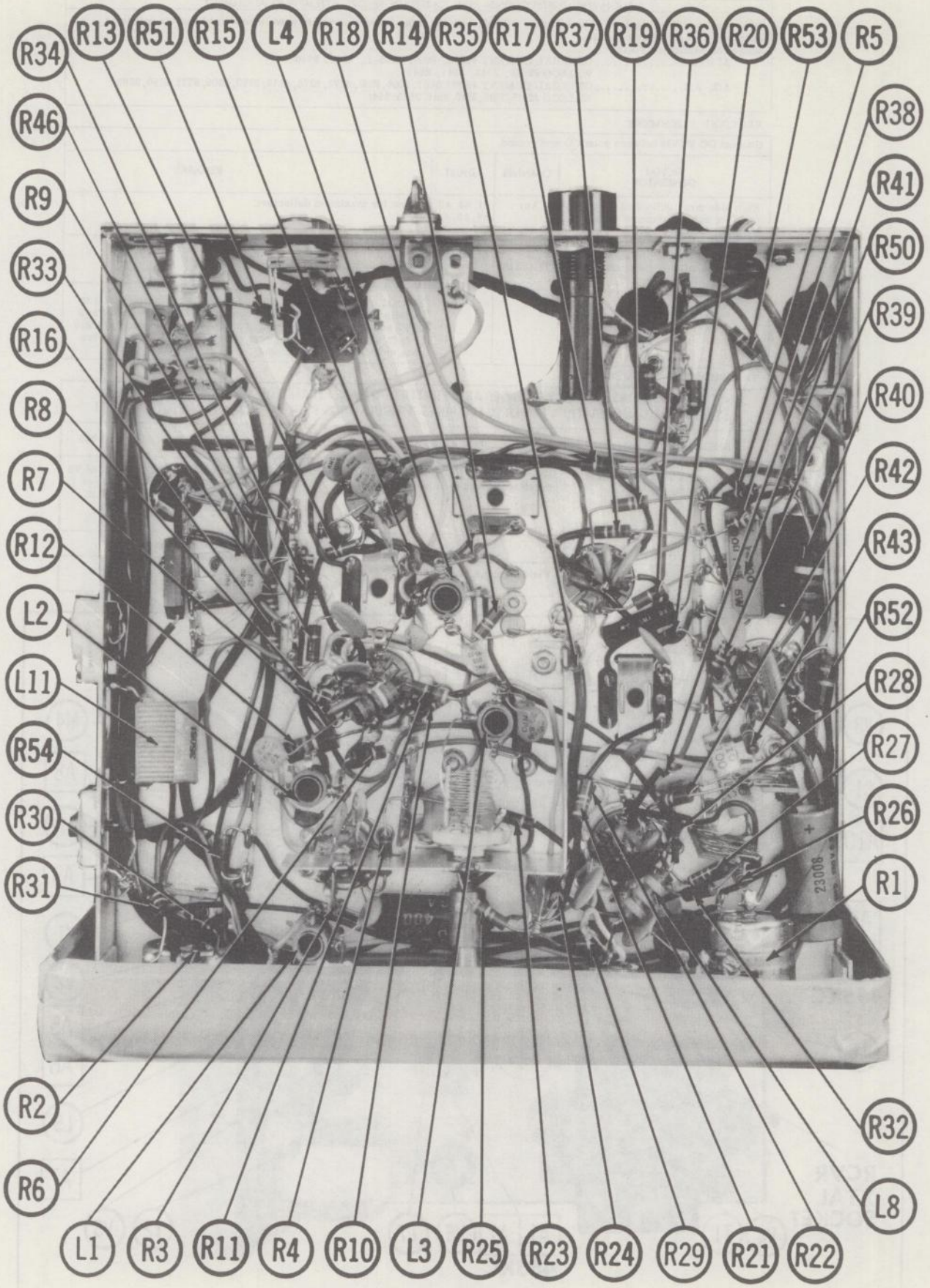

CHASSIS BOTTOM VIEW -- RESISTOR & INDUCTOR IDENT.

PARTS LIST AND DESCRIPTION

WIRING DATA

General-use Hook-up Wire	Use BELDEN No.	8530 (Solid) Available in 12 Colors
		8524 (Stranded) Available in 12 Colors
Shielded Antenna Lead	Use BELDEN No.	8214 Lowest Loss (RG-8/U Type)
		8237 Low Loss (RG-8/U)
		8240 (Solid) Miniature (RG-58/U)
		8259 (Stranded) Miniature (RG-58A/U)
Coiled Microphone Cable	Use BELDEN No.	8497 3 Conductor- 1 Shielded for Press-to-Talk (Neoprene)
		8496 3 Conductor- 1 Shielded for Press-to-Talk (Vinyl)
Ignition Noise Suppression	Use BELDEN No.	7300-Series Spark-Plug Sets
Bonding Strap	Use BELDEN No.	8661 (3/8 In.)

TUBES

ITEM No.	USE	TYPE (AMPEREX / GENERAL ELECTRIC / RCA)	ITEM No.	USE	TYPE (RAYTHEON / SYLVANIA)
V1	RF Amp.	6BA6	V5	Squelch-Speech Amp.	6FM8
V2	Mixer-Tune Osc.	6U8A	V6	Output-Modulator	6AQ5A
V3	Crystal Osc.-1st IF Amp.	6U8A	V7	Transmit Osc.	6FY5
V4	2nd IF Amp.-AF Amp.	6U8A	V8	Final Amp.	12BY7A

POWER RECTIFIERS & SIGNAL DIODES

ITEM No.	CURRENT RATING (Measured)	ORIGINAL Part or Type No.	RECTIFIERS: RCA PART No.	RECTIFIERS: SARKES TARZIAN PART No.	DIODES	NOTES
X1	.068A	93007	1N3194	F6		HV Doubler
X2	.068A	93007	1N3194	F6		HV Doubler
X3		95002			1N295	Detector (1N295)

ELECTROLYTIC CAPACITORS

ITEM No.	RATING: CAP.	RATING: VOLT.	EICO PART No.	AEROVOX PART No.	CORNELL-DUBILIER PART No.	GENERAL ELECTRIC PART No.	MALLORY PART No.	PYRAMID PART No.	SPRAGUE PART No.
C1A	■40	350	24017	AFH3-44	B0450	XC3-40	FP377.1	TMT3748	TVL-3787
B	▬40	350			BBR40-250				
C	▲40	250							
C2	25	6	23020	PTT26	NLW25-10	MT1-13	TT6X25	MLV25-6	TE-1091
C3	50	25	23007	PTT85	NLW50-25	MT1-17	TT25X50	MLV50-25	TE-1209
C4	4	250	23008	PRS1550	BBR4-250	QT1-2	TC50X	TD-4-250	TVA-1501

FIXED CAPACITORS

ITEM No.	RATING	REMARKS	AEROVOX PART No.	CENTRALAB PART No.	CORNELL-DUBILIER PART No.	ELMENCO PART No.	MALLORY PART No.	SPRAGUE PART No.
C5	7		C1-7	DD-6R8	L10V7	CCTO-6R8	CNO-568	10TCC-V68
C6	18 NPO			TCZ-18	C10Q18C	CCTO-180	CNO-418	10TCC-Q18
C7	.05		BPD-05	DD-503	CUB6S5	6DP-3-503	GP150	6PS-S50

FIXED CAPACITORS

ITEM No.	RATING	REMARKS	AEROVOX PART No.	CENTRALAB PART No.	CORNELL-DUBILIER PART No.	ELMENCO PART No.	MALLORY PART No.	SPRAGUE PART No.
C8	.005		DI-5000	DD-502	L10D5	CCD-502	GP250	10TS-D50
C9	12 NPO			TCZ-12	C10Q12C	CCTO-120	CNO-412	10TCC-Q12
C10	.005		DI-5000	DD-502	L10D5	CCD-502	GP250	10TS-D50
C11	18 NPO			TCZ-18	C10Q18C	CCTO-180	CNO-418	10TCC-Q18
C12	.005		DI-5000	DD-502	L10D5	CCD-502	GP250	10TS-D50
C13	.01		BPD-01	DD-103	BYA10S1	CCD-103	GP110	10TS-S10
C14	47 NPO		NPO-DI 47	TCZ-47	C10Q47C	CCTO-470	CNO-447	10TCC-Q47
C15	1 NPO		CI-1	TCZ-1			CNO-510	10TCC-V10
C16	.002		DI-2000	DD-202	L10D2	CCD-202	GP220	10TS-D20
C17	5 NPO		NPO-DI 5	TCZ-5	C10V5C	CCTO-050	CNO-547	10TCC-V50
C18	.005		DI-5000	DD-502	L10D5	CCD-502	GP250	10TS-D50
C19	.005		DI-5000	DD-502	L10D5	CCD-502	GP250	10TS-D50
C20	12 N750							
C21	39 NPO							
C22	.005		DI-5000	DD-502	L10D5	CCD-502	GP250	10TS-D50
C23	.005	(.01) †	DI-5000	DD-502	L10D5	CCD-502	GP250	10TS-D50
C24	.005		DI-5000	DD-502	L10D5	CCD-502	GP250	10TS-D50
C25	.005		DI-5000	DD-502	L10D5	CCD-502	GP250	10TS-D50
C26	.01		BPD-01	DD-103	BYA10S1	CCD-103	GP110	10TS-S10
C27	220 10%		DI-220	DD-221	L10T22	CCD-221	GP322	10TS-T22
C28	.01		BPD-01	DD-103	BYA10S1	CCD-103	GP110	10TS-S10
C29	.1 100V		P288N-1	DF-104	CUB2P1	1DP-2-104	GEM-201	5HK-P10
C30	.01		BPD-01	DD-103	BYA10S1	CCD-103	GP110	10TS-S10
C31	.05 400V		P488N-05	DD-503	CUB4S5	4DP-3-503	GP150	4PS-S50
C32	.01		BPD-01	DD-103	BYA10S1	CCD-103	GP110	10TS-S10
C33	.01		BPD-01	DD-103	BYA10S1	CCD-103	GP110	10TS-S10
C34	330 10%		DI-330	DD-331	L10T33	CCD-331	GP333	10TS-T33
C35	220 10%		DI-220	DD-221	L10T22	CCD-221	GP322	10TS-T22
C36	.01		BPD-01	DD-103	BYA10S1	CCD-103	GP110	10TS-S10
C37	.01		BPD-01	DD-103	BYA10S1	CCD-103	GP110	10TS-S10
C38	220 10%		DI-220	DD-221	L10T22	CCD-221	GP322	10TS-T22
C39	220 10%		DI-220	DD-221	L10T22	CCD-221	GP322	10TS-T22
C40	.01		BPD-01	DD-103	BYA10S1	CCD-103	GP110	10TS-S10
C41	100		1459-100		22R5T1	CM-19-100	MC235	MS-31
C42	10		CI-10	TCZ-10	L10Q1	DD-100	GP410	10TS-Q10
C43	220 5%		1459-220		22R5T22	CM-19-220J		MS-322
C44	12 NPO			TCZ-12	C10Q12C	CCTO-120	CNO-412	10TCC-Q12
C45	.005		DI-5000	DD-502	L10D5	CCD-502	GP250	10TS-D50
C46	.005 10%		DI-5000	DD-502	L10D5	CCD-502	GP250	10TS-D50
C47	.005		DI-5000	DD-502	L10D5	CCD-502	GP250	10TS-D50
C48	.005		DI-5000	DD-502	L10D5	CCD-502	GP250	10TS-D50
C49	.001		1469-1000		1W5D1	VCM-20-102	MC255	1FM-21
C50	3-12 NPO	#29500		822-FZ				
C51	80-480	#29509				466		
C52	.005		DI-5000	DD-502	L10D5	CCD-502	GP250	10TS-D50
C53	.005		DI-5000	DD-502	L10D5	CCD-502	GP250	10TS-D50
C54	.005		DI-5000	DD-502	L10D5	CCD-502	GP250	10TS-D50
C55	.005		DI-5000	DD-502	L10D5	CCD-502	GP250	10TS-D50
C56	.01	(.005) †						
C57	.01		BPD-01	DD-103	BYA10S1	CCD-103	GP110	10TS-S10
C58	.01		BPD-01	DD-103	BYA10S1	CCD-103	GP110	10TS-S10

† Alternate Value.
# Eico Part Number.

CONTROLS

All wattages 1/2 watt, or less, unless otherwise listed.

ITEM No.	USE	RESISTANCE	EICO PART No.	CENTRALAB PART No.	CLAROSTAT PART No.	CTS-IRC PART No.	MALLORY PART No.
R1	Volume & Switch	1meg	18059	B-70-S, or (F1-500K, SU204)	A47-1meg-Z, SWE-12, KSS-3	Q13-137, 76-1, or (BU2, CF26, SS1, GC)*	U53, US-26, or (UA16A, US-41, SK-1000)
R2	Squelch	500K	18076	B-59, or (F2-1meg, KR-1, SU204)	A47-500K-S, KSS-3	Q11-133, or (BU2, CF16, SS1, DC1)*	U50, or (UA55L, SK-1000)

* "SNAPTROL"

PARTS LIST AND DESCRIPTION (CONTINUED)

RESISTORS

All wattages 1/2 watt, or less, unless otherwise listed.

ITEM No.	RATING	REPLACEMENT DATA		
		IRC PART No.	WORKMAN PART No.	REMARKS
R3	1000Ω			
R4	1meg			
R5	47K			
R6	1000Ω			
R7	1meg			
R8	100K			
R9	1000Ω			
R10	47K			
R11	47Ω			
R12	22K 1W			
R13	47K			
R14	47K			
R15	1meg			
R16	100K			
R17	1000Ω			
R18	1meg			
R19	100K			
R20	1000Ω			
R21	47K			
R22	1meg			
R23	1meg			
R24	100K			
R25	360K 5%			
R26	470K			
R27	470K			
R28	1meg			

ITEM No.	RATING	REPLACEMENT DATA		
		IRC PART No.	WORKMAN PART No.	REMARKS
R29	1meg			
R30	1.8meg			
R31	220K			
R32	1meg			
R33	470K			
R34	470K			
R35	470K			
R36	4700Ω			
R37	22K			
R38	470K			
R39	470K			
R40	560Ω 2W			
R41	1meg			
R42	100K			
R43	10K			
R44	47K			
R45	15K			
R46	47K			
R47	68K			
R48	47K			
R49	4700Ω			
R50	500Ω 5W	PW5-500	5W-SQ-500	
R51	3300Ω			
R52	130Ω 1W 5%			
R53	22K			
R54	1meg			(15Ω) †

† Alternate

COILS (RF-IF)

ITEM No.	USE	REPLACEMENT DATA					NOTES
		EICO PART No.	Merit PART No.	Miller PART No.	Stancor PART No.	Workman PART No.	
L1	Rec. Ant.	36024					
L2	Mixer (2.4uh)	36025					
L3	Osc. (Tunable)(1.6uh)	36026					
L4	Osc.(Crystal)(6.5uh)	36027		4204			
L5	1st IF	34615					
L6	2nd IF	34616					
L7	3rd IF	34617					
L8	Grid Choke(100uh)	35052		6112			
L9	Trans. Osc. (3.5uh)	36023					
L10	Final Plate (100uh)	35052		6112			
L11	Tank Coil(1.9uh)	35051					

TRANSFORMER (POWER)

ITEM No.	RATING			REPLACEMENT DATA					NOTES
	PRI.	SEC. 1	SEC. 2	EICO PART No.	MERIT PART No.	STANCOR PART No.	THORDARSON PART No.	TRIAD PART No.	
T1	117VAC @ .5A	110VAC @ .068A	12.6VAC @ 1.7A	30035					

TRANSFORMER (AUDIO OUTPUT)

ITEM No.	IMPEDANCE		REPLACEMENT DATA					NOTES
	PRI.	SEC.	EICO PART No.	Merit PART No.	Stancor PART No.	Thordarson PART No.	Triad PART No.	
T2	7500Ω Tap @ 6000Ω	3-4Ω	32023					

SPEAKER

ITEM No.	TYPE			REPLACEMENT DATA		NOTES
	SIZE	FIELD	V. C. IMP.	EICO PART No.	QUAM PART No.	
SP1	3"x 5"	PM	3-4Ω	55014	35A05	

FUSES

ITEM No.	TYPE	RATING	REPLACEMENT DATA					
			EICO PART No.		LITTELFUSE PART No.		BUSS PART No.	
			FUSE	HOLDER	FUSE	HOLDER	FUSE	HOLDER
M1	3AG S/B	1A 250V	91006	97800	313001 (3AG 1A 250V) S/B	341001	MDL1	HCM

MISCELLANEOUS

ITEM No.	PART NAME	EICO PART No.	NOTES
M2	Tuning Cap.	29016	15mmf
M3	Crystal	49011	Transmit (Order Frequency Desired)
M4	Switch	60087	Channel Selector (Rotary Wafer Type)
M5	Relay	39002	Receive-Transmit
	Microphone	57501	
	Neon Indicator	97715	2 Used (Power On, Transmit Indicator)

CABINETS & CABINET PARTS

(When Ordering Cabinets & Cabinet Parts, Specify Model, Chassis & Color)

NAME	PART NO.	DESCRIPTION
Knob	53034	
Cabinet	88093	

PHOTOFACT® Folder

GLOBE MODELS CB-100, A

TRADE NAME	Globe Models CB-100, CB-100A
MANUFACTURER	Globe Electronics, A Div. of Textron Electronics, Inc., 22-30S. 34th St., Council Bluffs, Iowa
TYPE SET	AC (or) Battery Operated 10 Tube Crystal Controlled Citizens Band Transmitter-Receiver
POWER SUPPLY	110 – 120 Volts AC, 60 Cycles (or) 12 Volt Storage Battery 110 – 120 Volts AC, 60 Cycles (or) 6 Volt Storage Battery
RATING	56 Watts, .5 Amp. @117 Volts AC (or) 5 Amp. @12.6 Volts DC (or) 10 Amp. @6.3 Volts DC
TUNING RANGE	Any 3 of Citizens Band Channels 1 thru 23

GLOBE MODELS CB-100, A

NOTICE

ONLY THOSE PERSONS PROPERLY LICENSED ARE PERMITTED TO MAKE ADJUSTMENTS OR REPAIRS WHICH MAY RESULT IN ILLEGAL OPERATION. (REFER TO FCC RULES & REGULATIONS PART 19, SUBPART D, SECTION 19.71).

HOWARD W. SAMS & CO., INC. Indianapolis 6, Indiana

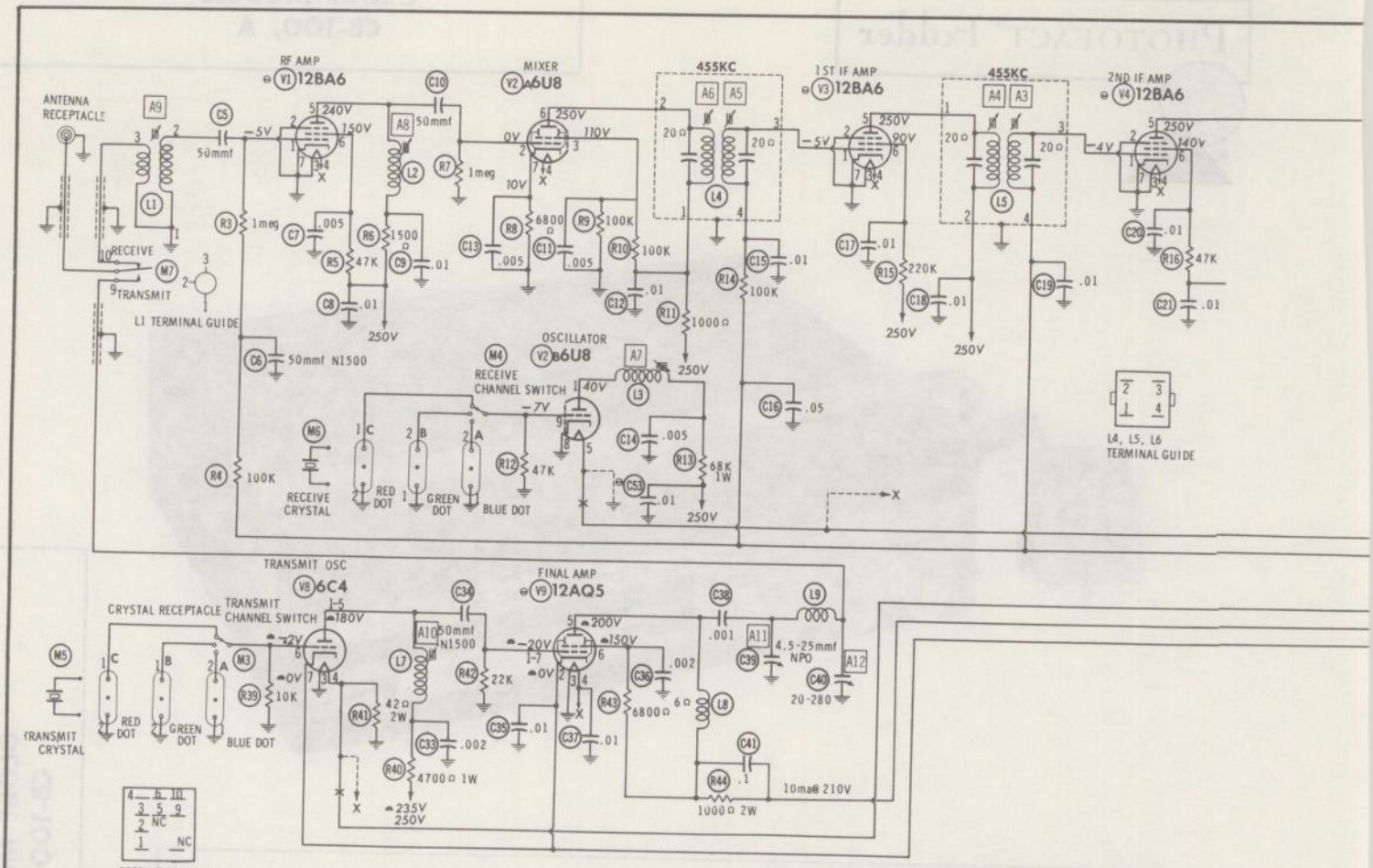

RESISTANCE READINGS

ITEM	TUBE	Pin 1	Pin 2	Pin 3	Pin 4	Pin 5	Pin 6	Pin 7	Pin 8	Pin 9
V1	12BA6	3meg	0Ω	FIL	FIL	†1700Ω	†47K	0Ω		
V2	6U8	†68K	1meg	†80K	FIL	FIL	†1200Ω	6800Ω	0Ω	47K
V3	12BA6	2meg	0Ω	FIL	FIL	†240Ω	†220K	0Ω		
V4	12BA6	1.9meg	0Ω	FIL	FIL	†240Ω	†47K	0Ω		
V5	6BJ8	450K	2.5meg	6800Ω	FIL	FIL	900K	74K	2meg	9K
V6	12AZ7	†255K	540K	30K	FIL	FIL	†520K	2.2meg	*2200Ω	FIL
V7	12AQ5	500K	220Ω	FIL	FIL	†850Ω	†47K	500K		
V8	6C4	4900Ω	NC	FIL	FIL	NC	10K			
V9	12AQ5	22K	*0Ω	FIL	FIL	†1.8K	†8600Ω	22K		
V10	12BW4	310Ω	NC	NC	FIL	FIL	NC	305Ω		¶

ALL MEASUREMENTS MADE IN "RECEIVE" POSITION WITH SQUELCH CONTROL SET AT NORMAL OPERATING POSITION UNLESS OTHERWISE DESIGNATED.

† MEASURED FROM PIN 9 OF V10.

¶ THIS READING WILL VARY DEPENDING UPON THE CONDITION OF THE ELECTROLYTIC IN THE CIRCUIT.

* MEASURED IN "TRANSMIT" POSITION.

NC NO CONNECTION

NUMBERS ASSIGNED TO COILS, SWITCHES, PLUGS, SOCKETS, AND TRANSFORMERS ARE TO FACILITATE CIRCUIT TRACING OR COMPONENT REPLACEMENT AND MAY NOT NECESSARILY BE FOUND ON THE UNIT.

⊖ SEE PARTS LIST FOR ALTERNATE VALUE OR APPLICATION

1. DC voltage measurements taken with vacuum tube voltmeter; AC voltages measured with 1000 ohm per volt voltmeter.
2. Socket connections are shown as bottom views.
3. Measured values are from socket pin to common ground.
4. Line voltage maintained at 117 volts for voltage readings.
5. Nominal tolerance of component values makes possible a variation of ±15% in voltage and resistance readings.
6. All controls at minimum, proper output load connected.

A PHOTOFACT STANDARD NOTATION SCHEMATIC

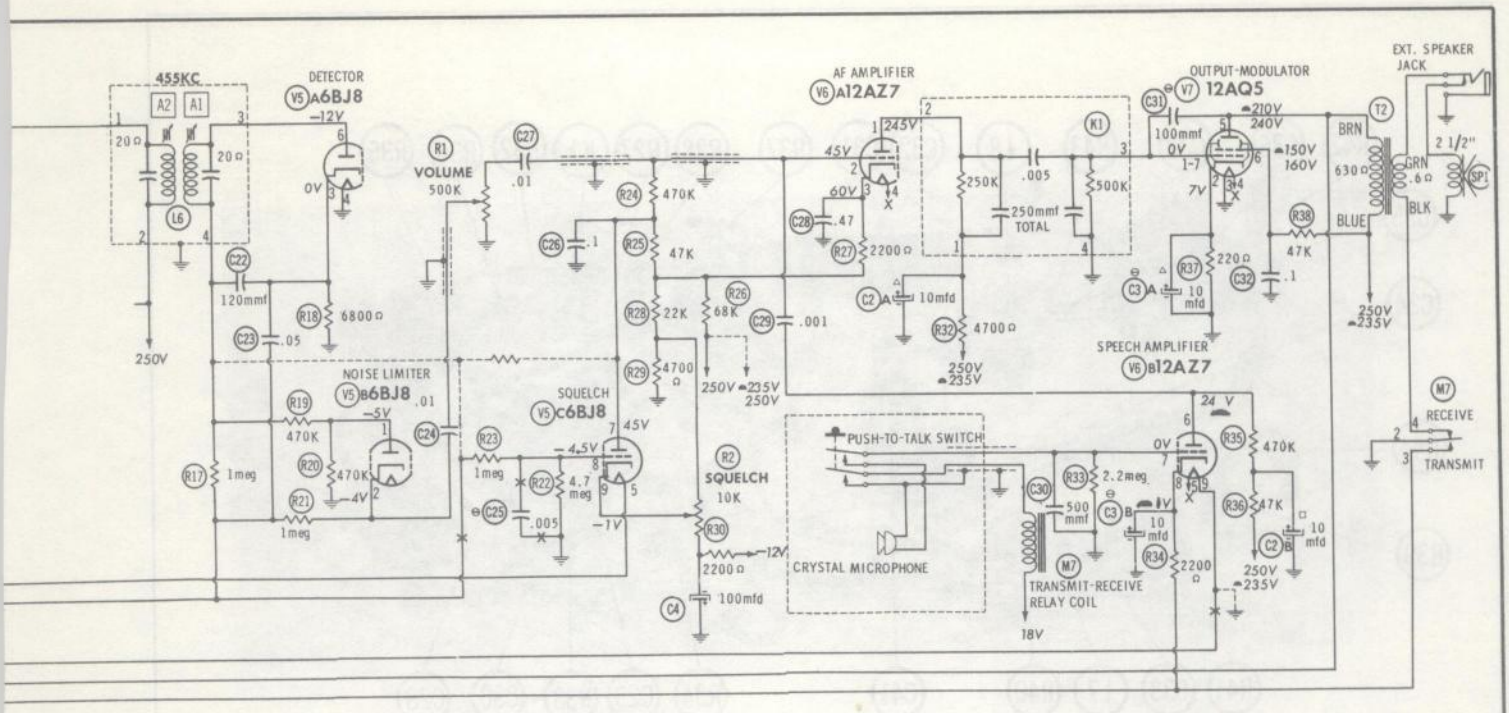

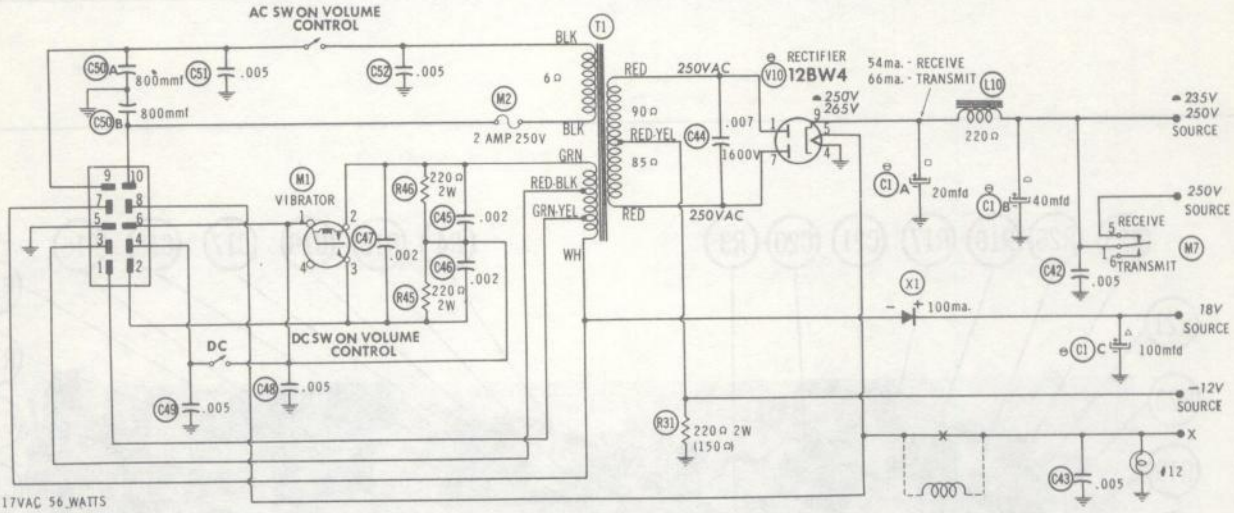

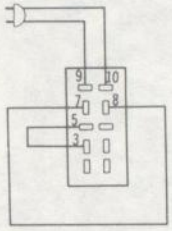

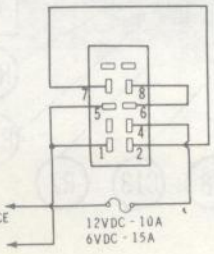

GLOBE MODELS
CB-100, A

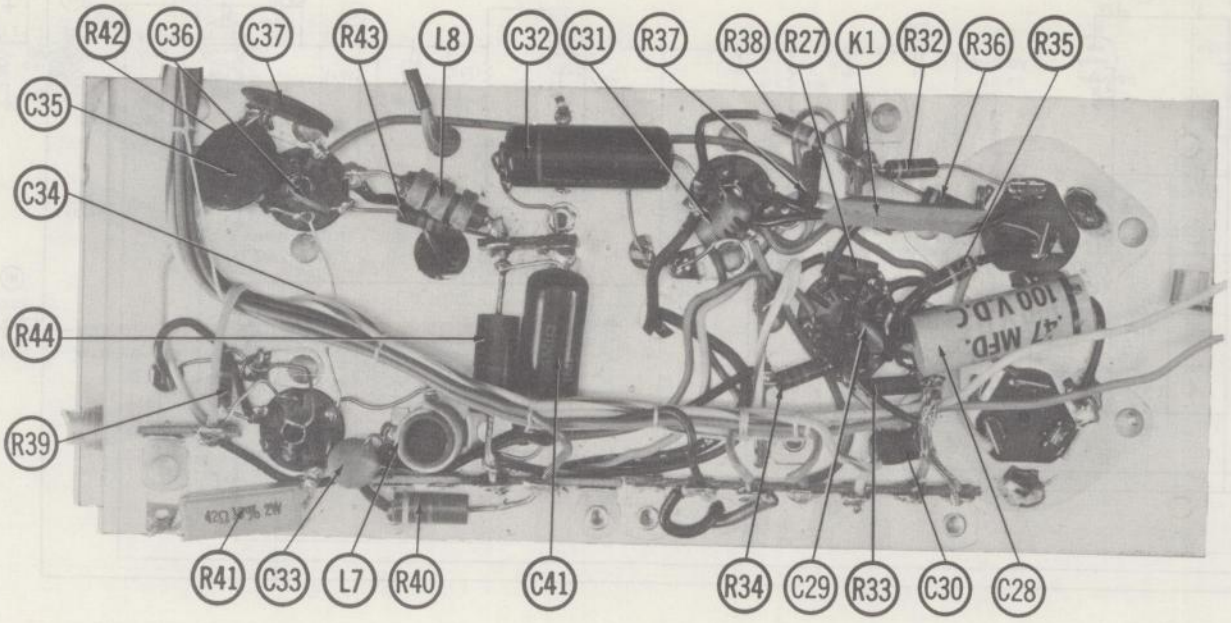

TRANSMITTER CHASSIS — BOTTOM VIEW

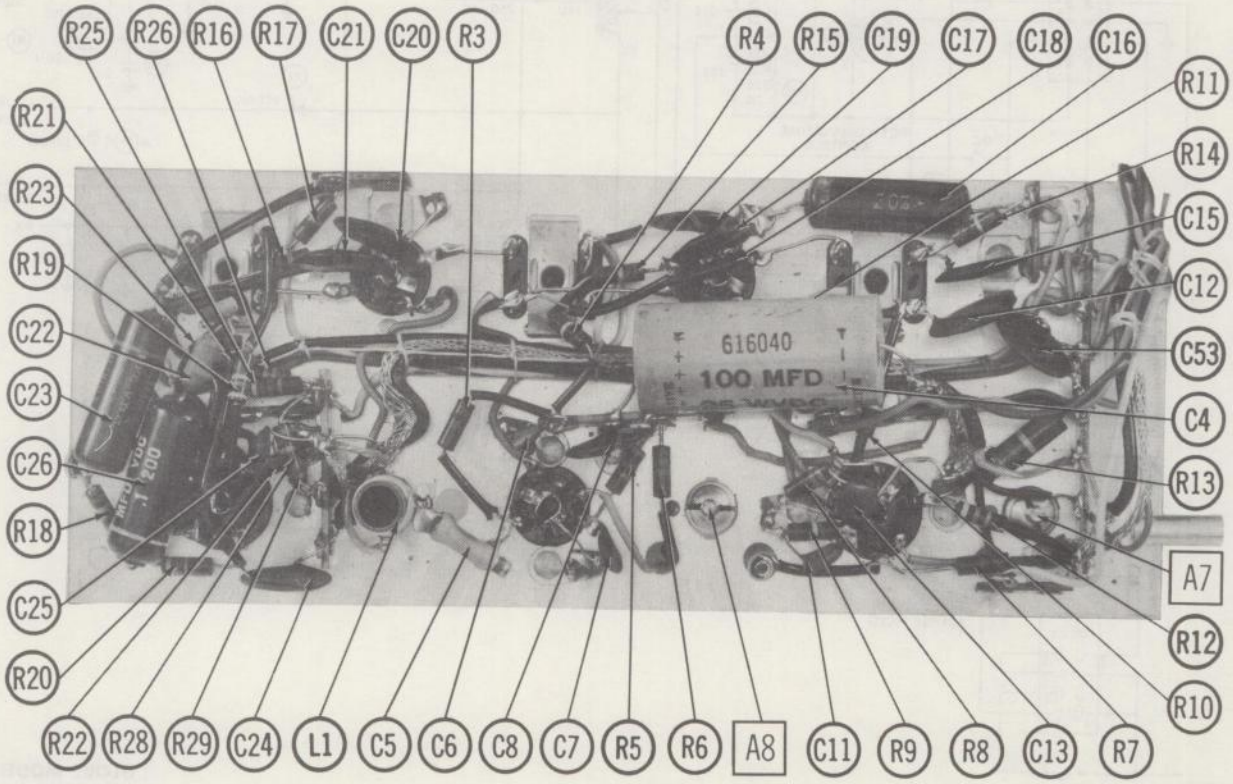

RECEIVER CHASSIS — BOTTOM VIEW

ALIGNMENT INSTRUCTIONS

ALIGNMENT INSTRUCTIONS—READ CAREFULLY BEFORE ATTEMPTING ALIGNMENT

Use only enough generator output to provide a usable indication.
Suggested Alignment Tools:

A1 Thru A6.....GENERAL CEMENT #8282, 8606, 8606-L, 9295, 9440
WALSCO #2526, 2543, 2544, 2545

A7, A8, A9, A10.....GENERAL CEMENT #5003, 8271, 8275, 8276, 8609, 8721, 8722, 9150, 9298
WALSCO #2516, 2518, 2519

A11, A12.....GENERAL CEMENT #5004, 5009, 8195, 8274, 8275, 8607, 8728, 8987, 8988, 8989, 9291
WALSCO #2515, 2520, 2522, 2523, 2531, 2532, 2534, 2537, 2538

RECEIVER ALIGNMENT

Connect DC probe of VTVM to Point Ⓐ, common to chassis.

	SIGNAL GENERATOR	CHANNEL	ADJUST	REMARKS
1.	Tune to 455KC (Unmod.) High side thru .001mfd to Pin 2 (grid) of Mixer, common to ground.		A1, A2, A3, A4, A5, A6	Remove Receiver Crystal. Adjust for maximum deflection. Reinsert Crystal.
2.	Tune to Crystal Freq. High side to antenna receptacle, low side to ground.	Highest Channel Used	A7	Adjust for maximum deflection by rocking A7. Note rate of dropoff and set just below peak on side of gradual dropoff.
3.	"	"	A8, A9	Adjust for maximum deflection. Repeat Steps 2 & 3.

TRANSMITTER ALIGNMENT

Best results will be obtained when adjusting A11 and A12 if the antenna normally used is connected and the unit is as nearly in the cabinet as possible.

ONLY THOSE PERSONS PROPERLY LICENSED ARE PERMITTED TO MAKE REPAIRS OR ADJUSTMENTS WHICH MAY RESULT IN ILLEGAL OPERATION. (REFER TO FCC RULES & REGULATIONS PART 19, SUBPART D, SECTION 19.71)

	SPECIAL INSTRUCTIONS	INDICATOR	ADJUST	REMARKS
4.	Connect suitable load to antenna receptacle.	VTVM with crystal probe. Connect to pin 1 (grid) of final amp.	A10	Key transmitter. Adjust A10 for MINIMUM of 15V. Key transmitter several times to assure stable Oscillation. Repeat if necessary.
	"	RF Wattmeter or field strength meter.	A11, A12	Key transmitter. Adjust for maximum output.

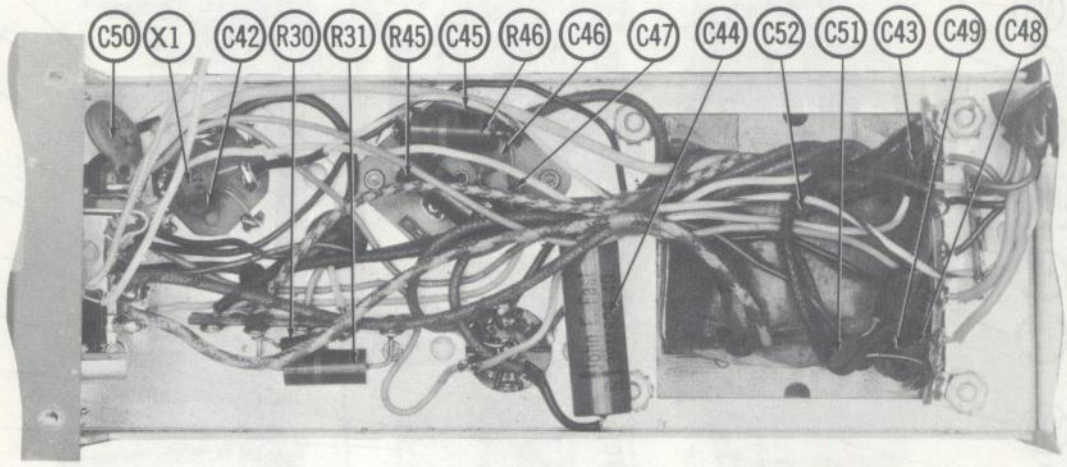

POWER CHASSIS—BOTTOM VIEW

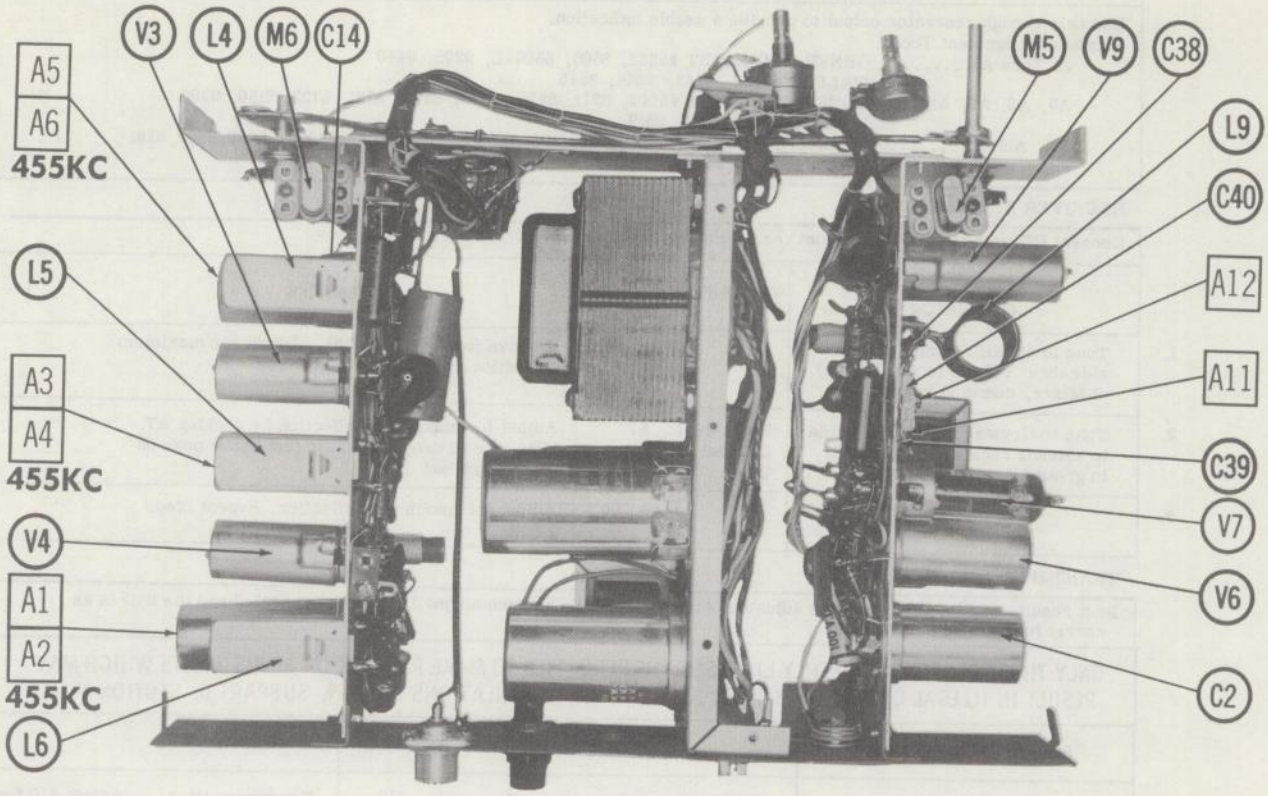

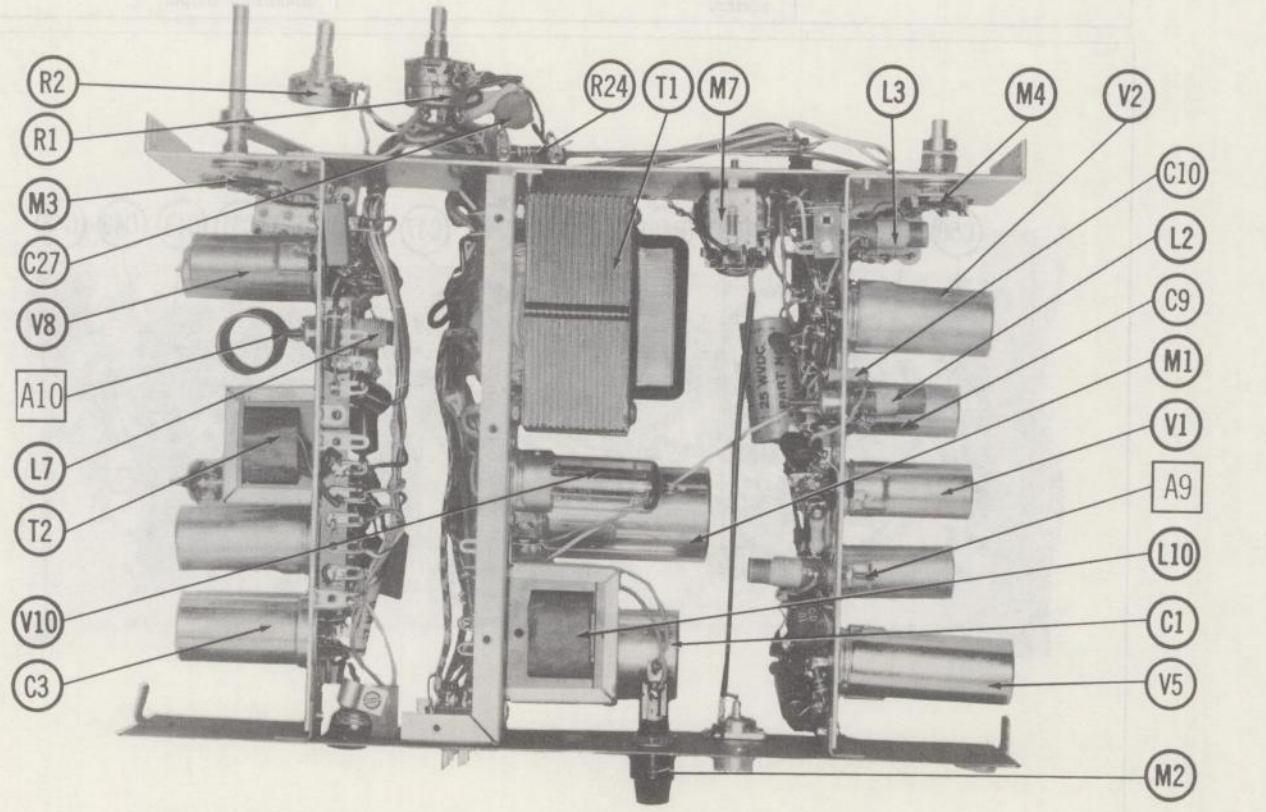

COMPLETE CHASSIS — SIDE VIEWS

PARTS LIST AND DESCRIPTIONS

WIRING DATA

General-use Hook-up Wire	Use BELDEN No.	8530 (Solid) Available in 12 Colors 8524 (Stranded) Available in 12 Colors
Shielded Antenna Lead	Use BELDEN No.	8214 Lowest Loss (RG-8/U Type) 8237 Low Loss (RG-8/U) 8240 (Solid) Miniature (RG-58/U) 8259 (Stranded) Miniature (RG-58A/U)
Coiled Microphone Cable	Use BELDEN No.	8497 3 Conductor- 1 Shielded for Press-to-Talk (Neoprene) 8496 3 Conductor- 1 Shielded for Press-to-Talk (Vinyl)
Ignition Noise Suppression	Use BELDEN No.	7300-Series Spark-Plug Sets
Bonding Strap	Use BELDEN No.	8661 (3/8 In.)

TUBES

◆ AMPEREX ◆ GENERAL ELECTRIC ◆ RCA ◆ RAYTHEON ◆ SYLVANIA ◆

ITEM No.	USE	TYPE
V1	RF Amplifier	12BA6 (6BA6)*
V2	Mixer-Oscillator	6U8
V3	1st IF Amplifier	12BA6 (6BA6)*
V4	2nd IF Amplifier	12BA6 (6BA6)*
V5	Det. -ANL-Squelch	6BJ8

ITEM No.	USE	TYPE
V6	AF Amp. -Speech Amp.	12AZ7
V7	Output-Modulator	12AQ5 (6AQ5)*
V8	Transmitter Oscillator	6C4
V9	Final Amplifier	12AQ5 (6AQ5)*
V10	Rectifier	12BW4 (6BW4)*

* 6VDC Versions.

POWER RECTIFIERS & SIGNAL DIODES

ITEM No.	CURRENT RATING (Measured)	ORIGINAL Part or Type No.	RECTIFIERS: RCA PART No.	RECTIFIERS: SARKES TARZIAN PART No.	DIODES: RAYTHEON PART No.	NOTES
X1	.1A	3700-014	1N1763	2F4		Relay DC

ELECTROLYTIC CAPACITORS

ITEM No.	RATING: CAP.	RATING: VOLT.	GLOBE PART No.	AEROVOX PART No.	CORNELL-DUBILIER PART No.	GENERAL ELECTRIC PART No.	MALLORY PART No.	PYRAMID PART No.	SPRAGUE PART No.
C1A	■20	450	1106-023 ①		C1090				TVLS-3744.4*
B	▬40	450							
C	▲100	25							
C2A	▲10	350	1106-022	AFH2-36	CO370	XC2-3	FP231	TMD2230	TVL-2750*
B	■10	350							
C3A	▲10	25	1106-021 ②	AFH3-14	B0210	XC3-7	FP330.5	TMT3292	TVL-3432.8
B	10	25							
C	■10	25							
C4	100	25	1106-019	PRS1280	BR100-25	QT1-23	TC2501	TD-100-25	TVA-1207

① In some versions C1C may be a separate unit (Part #1106-019). C1A & B Part #1106-020.
② C3C not used.
* Not normally in distributor's stock. Available thru distributor on order to manufacturer.

FIXED CAPACITORS

ITEM No.	RATING	REMARKS	AEROVOX PART No.	CENTRALAB PART No.	CORNELL-DUBILIER PART No.	ELMENCO PART No.	MALLORY PART No.	SPRAGUE PART No.
C5	50	#1101-042	SI 50	D6-500	L10Q5	CCD-500	GP450	10TS-Q50
C6	50 N1500			TCL-47		*		
C7	.005		BPD-005	DD-502	BYA10D5	CCD-502	B-250	5HK-D50
C8	.01		BPD-01	DD-103	BYA10S1	CCD-103	B-110	5HK-S10

FIXED CAPACITORS (cont)

ITEM No.	RATING	REMARKS	AEROVOX PART No.	CENTRALAB PART No.	CORNELL-DUBILIER PART No.	ELMENCO PART No.	MALLORY PART No.	SPRAGUE PART No.
C9	.01		BPD-01	DD-103	BYA10S1	CCD-103	B-110	5HK-S10
C10	50		SI 50	D6-500	L10Q5	CCD-500	GP450	10TS-Q50
C11	.005		BPD-005	DD-502	BYA10D5	CCD-502	B-250	5HK-D50
C12	.01		BPD-01	DD-103	BYA10S1	CCD-103	B-110	5HK-S10
C13	.005		BPD-005	DD-500	BYA10D5	CCD-502	B-250	5HK-D50
C14	.005		BPD-005	DD-502	BYA10D5	CCD-502	B-250	5HK-D50
C15	.01		BPD-01	DD-103	BYA10S1	CCD-103	B-110	5HK-S10
C16	.05 200V		P288N-05	DD-503	CUB2S5	4DP-3-503	GEM-415	2TM-S50
C17	.01		BPD-01	DD-103	BYA10S1	CCD-103	B-110	5HK-S10
C18	.01		BPD-01	DD-103	BYA10S1	CCD-103	B-110	5HK-S10
C19	.01		BPD-01	DD-103	BYA10S1	CCD-103	B-110	5HK-S10
C20	.01		BPD-01	DD-103	BYA10S1	CCD-103	B-110	5HK-S10
C21	.01		BPD-01	DD-103	BYA10S1	CCD-103	B-110	5HK-S10
C22	120		SI 120	D6-121	L10T12	CCD-121	GP312	10TS-T12
C23	.05 200V		P288N-05	DD-503	CUB2S5	4DP-3-503	GEM-415	2TM-S50
C24	.01		BPD-01	DD-103	BYA10S1	CCD-103	B-110	5HK-S10
C25	.005	Note 1	BPD-005	DD-502	BYA10D5	CCD-502	B-250	5HK-D50
C26	.1 200V		P288N-1	DF-104	CUB2P1	2DP-3-104	GEM-201	2TM-P10
C27	.01		BPD-01	DD-103	BYA10S1	CCD-103	B-110	5HK-S10
C28	.47		P288N-47		CUB2P47	1DP-4-474	GEM-2047	2TM-P47
C29	.001		BPD-001	DD-102	BYA10D1	CCD-102	B-210	5HK-D10
C30	500		SI 500	D6-501	L10T5	CCD-501	GP350	10TS-T50
C31	100		SI 100	D6-101	L10T1	CCD-101	GP310	10TS-T10
C32	.1 200V		P288N-1	DF-104	CUB2P1	2DP-3-104	GEM-201	2TM-P10
C33	.002		BPD-002	DD-202	BYA10D2	CCD-202	B-220	5HK-D20
C34	50 N1500	#1101-033		TCL-47		*		
C35	.01		BPD-01	DD-103	BYA10S1	CCD-103	B-110	5HK-S10
C36	.002		BPD-002	DD-202	BYA10D2	CCD-202	B-220	5HK-D20
C37	.01		BPD-01	DD-103	BYA10S1	CCD-103	B-110	5HK-S10
C38	.001		BPD-001	DD-102	BYA10D1	CCD-102	B-210	5HK-D10
C39	4.5-25 NPO	#1111-001		822-AZ		464		
C40	20-280		P288N-1	DF-104	CUB2P1	2DP-3-104	GEM-201	2TM-P10
C41	.1 200V		BPD-005	DD-502	BYA10D5	CCD-502	B-250	5HK-D50
C42	.005		BPD-005	DD-502	BYA10D5	CCD-502	B-250	5HK-D50
C43	.005		P1684CM-007	DD16-702	CUB16D7	16DP-3-702	GEM-1627	MB-D7
C44	.007 1600V		BPD-002	DD-202	BYA10D2	CCD-202	B-220	5HK-D20
C45	.002		BPD-002	DD-202	BYA10D2	CCD-202	B-220	5HK-D20
C46	.002		BPD-002	DD-202	BYA10D2	CCD-202	B-220	5HK-D20
C47	.002		BPD-005	DD-502	BYA10D5	CCD-502	B-250	5HK-D50
C48	.005		BPD-005	DD-502	BYA10D5	CCD-502	B-250	5HK-D50
C49	.005					CCD-801		
C50A	800		BPD-2X001	DD3-102	BYD6D01	CCD-801	B2X210	5HK-2D10
B	800							
C51	.005		BPD-005	DD-502	BYA10D5	CCD-502	B-250	5HK-D50
C52	.005		BPD-005	DD-502	BYA10D5	CCD-502	B-250	5HK-D50
C53	.01	Note 1	BPD-01	DD-103	BYA10S1	CCD-103	B-110	5HK-S10

Note 1. Not used in some versions.
Globe Part Number.
* Not normally in distributor's stock. Available thru distributor on order to manufacturer.

CONTROLS

All wattages 1/2 watt, or less, unless otherwise listed.

ITEM No.	USE	RESISTANCE	GLOBE PART No.	CENTRALAB PART No.	CLAROSTAT PART No.	CTS-IRC PART No.	MALLORY PART No.
R1	Volume & Switch	500K	2300-015	B-60-S, or (AB-60, KR-2, AK-9)	A47-500K-Z, SWE-20, RS-2	Q13-133, or (BU1, CF25, SS1, WF)*	U48, US27 or (UA55A, US42, SL-3500)
R2	Squelch	10K	2300-022	B-14, or (AB-14, AK-9)	A47-10K-S, RS-2	Q11-116 or (BU1, CF9, SS1, DC1)*	U20, or (UA14L, SL-3500)

* "SNAPTROL"

PARTS LIST AND DESCRIPTIONS (Continued)

RESISTORS

All wattages 1/2 watt, or less, unless otherwise listed.

ITEM No.	RATING	REPLACEMENT DATA		
		IRC PART No.	WORKMAN PART No.	REMARKS
R3	1meg			
R4	100K			
R5	47K			
R6	1500Ω			
R7	1meg			
R8	6800Ω			
R9	100K			
R10	100K			
R11	1000Ω			
R12	47K			
R13	68K 1W			
R14	100K			
R15	220K			
R16	47K			
R17	1meg			
R18	6800Ω			
R19	470K			
R20	470K			
R21	1meg			
R22	4.7meg			
R23	1meg			
R24	470K			
R25	47K			
R26	68K			
R27	2200Ω			
R28	22K			
R29	4700Ω			
R30	2200Ω			
R31	220Ω 2W			(150Ω) *
R32	4700Ω			
R33	2.2meg			
R34	2200Ω			
R35	470K			
R36	47K			
R37	220Ω			
R38	47K			
R39	10K			
R40	4700Ω 1W			
R41	42Ω 2W			
R42	22K			
R43	6800Ω			
R44	1000Ω 2W			
R45	220Ω 2W			
R46	220Ω 2W			

* Alternate

COILS (RF-IF)

ITEM No.	USE	REPLACEMENT DATA					NOTES
		GLOBE PART No.	Merit PART No.	Miller PART No.	Stancor PART No.	Workman PART No.	
L1	Ant.	1400-104	TV116	6250	RTC-8568	T232A	
L2	RF	1400-105	TV-118	6171-A	RTC-8609	T216	
L3	Osc. Plate	1400-103	TV-118	6171A	RTC-8609	T216	
L4	1st IF	1205-009	BC-352	12-C9	RTC-8636	T612	
L5	2nd IF	1205-009	BC-353	12-C10	RTC-8637	T613	
L6	3rd IF	1205-009	BC-353	12-C10	RTC-8637	T613	
L7	Osc. Plate	1400-106	TV-118	6171-A	RTC-8609	T216	
L8	RF (120uh)		TV-182	6153	RTC-8508	T307	
L9	Output Final	1400-107					

FILTER CHOKE

ITEM No.	RATINGS			REPLACEMENT DATA					NOTES
	CURRENT (Measured)	DC RES.	INDUCTANCE (0 CURRENT 1000 ∿)	GLOBE PART No.	Merit PART No.	Stancor PART No.	Thordarson PART No.	Triad PART No.	
L10	.066A	220Ω	3.2H	1300-017					

TRANSFORMER (POWER)

ITEM No.	RATING			REPLACEMENT DATA					NOTES
	PRI.	SEC. 1	SEC. 2	GLOBE PART No.	Merit PART No.	Stancor PART No.	Thordarson PART No.	Triad PART No.	
T1	117VAC @ .5A	500VCT @ .054A (.066A)*	12.6V @ 2.2A (AC Operation)	1200-018					*Transmit

TRANSFORMER (AUDIO OUTPUT)

ITEM No.	IMPEDANCE		REPLACEMENT DATA					NOTES
	PRI.	SEC.	GLOBE PART No.	Merit PART No.	Stancor PART No.	Thordarson PART No.	Triad PART No.	
T2	17K	3-4Ω	1203-011					

SPEAKER

ITEM No.	TYPE			REPLACEMENT DATA		NOTES
	SIZE	FIELD	V. C. IMP.	GLOBE PART No.	QUAM PART No.	
SP1	2½"	PM	3-4Ω	4002-001	25A07	

COMPONENT COMBINATIONS

ITEM No.	USE	DESCRIPTION	GLOBE PART No.	REPLACEMENT DATA
K1	Audio Coupling	250mmf (Total), .01mfd, 250K, 500K	1109-001	Aerovox PA-112-3 Centralab PC-81 Sprague T-2

VIBRATOR

ITEM No.	TYPE	INPUT VOLTS	FRE-QUENCY	REPLACEMENT DATA				NOTES
				GLOBE PART No.	CORNELL-DUBILIER PART No.	MALLORY PART No.	RADIART PART No.	
M1	Interrupter Interrupter	12 6	115% 115%	4001-001	G8801 5301*	G1601 1601*	G8801 5301*	12 Volt Version * 6 Volt Version

FUSES

ITEM No.	TYPE	RATING	REPLACEMENT DATA					
			GLOBE PART No.		LITTELFUSE PART No.		BUSS PART No.	
			FUSE	HOLDER	FUSE	HOLDER	FUSE	HOLDER
M2	3AG	2A 250V	1500-011		312002 (3AG 2A 250V)	342012	AGC 2	HKP-CC

MISCELLANEOUS

ITEM No.	PART NAME	GLOBE PART No.	NOTES
M3	Switch	2100-027	Transmitter Channel (Rotary Wafer Type)
M4	Switch	2100-028	Receiver Channel (Rotary Wafer Type)
M5	Crystal		Transmitter
M6	Crystal	3700-128	Receiver
M7	Relay	3500-015	Transmitt-Receive
	Microphone	4000-008	

CABINETS & CABINET PARTS

(When Ordering Cabinets & Cabinet Parts, Specify Model, Chassis & Color)

NAME	PART NO.	DESCRIPTION
Front Panel Cabinet	1800-020 1700-029	

PHOTOFACT® Folder

GONSET MODELS G-14 (3430), G-14 (3433)

MODEL G-14 (3430)

TRADE NAME	Gonset Models G-14 (3430), G-14 (3433)
MANUFACTURER	Gonset Division, Young Spring, Wire Corp., 801 S. Main Street, Burbank, California
TYPE SET	AC-Battery Operated 9 Tube Citizens Band Transmitter-Receiver
POWER SUPPLY	Model G-14 (3430): 110-120 Volts AC, 60 Cycles (or) 12 Volt Storage Battery Model G-14 (3433): 110-120 Volts AC, 60 Cycles (or) 6 Volt Storage Battery
RATING	RECEIVE: 71 Watts, .65 Amp. @117 Volts AC 5 Amp. @12.6 Volts DC 10 Amp. @6.3 Volts DC TRANSMIT: 74 Watts, .68 Amp.@117 Volts AC 5.2 Amp.@12.6 Volts DC 10.4 Amp.@6.3 Volts DC
TUNING RANGE	Any 4 of Citizens Band Channels 1 thru 23

NOTICE

ONLY THOSE PERSONS PROPERLY LICENSED ARE PERMITTED TO MAKE REPAIRS OR ADJUSTMENTS WHICH MAY RESULT IN ILLEGAL OPERATION. (REFER TO FCC RULES & REGULATIONS PART 19, SUBPART D, SECTION 19.71.)

GONSET MODELS G-14 (3430), G-14 (3433)

HOWARD W. SAMS & CO., INC. Indianapolis 6, Indiana

LY648

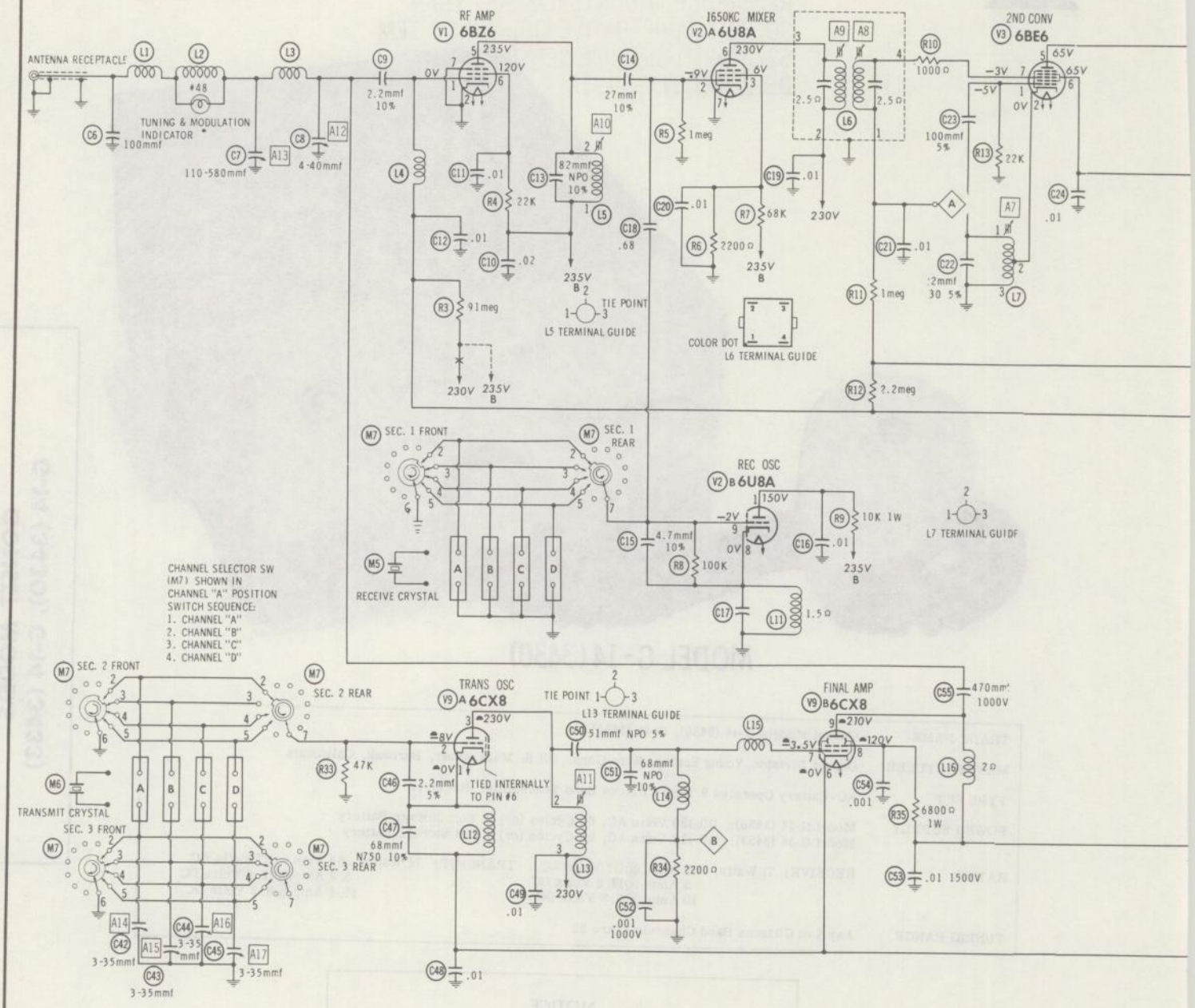

RESISTANCE READINGS

ITEM	TUBE	Pin 1	Pin 2	Pin 3	Pin 4	Pin 5	Pin 6	Pin 7	Pin 8	Pin 9
V1	6BZ6	3.5meg	0Ω	FIL	FIL	†430Ω	†22K	0Ω		
V2	6U8A	10K	1meg	†68K	FIL	FIL	†1000Ω	0Ω	1.5Ω	100K
V3	6BE6	22K	0Ω	FIL	FIL	†27K	†27K	1.5meg		
V4	6BA6	1.6meg	0Ω	FIL	FIL	†10K	†78K	82Ω		
V5	6BA6	1meg	0Ω	FIL	FIL	⊕† INF † 10K	†68K	82Ω		
V6	6AL5	1.2meg	220K	FIL	FIL	2.5meg	0Ω	†1.5meg		
V7	6AV6	2.2meg	0Ω	FIL	FIL	440K	3.5 meg	†270K		
V8	6CW5	470K	470K	220Ω	FIL	FIL	NC	†370Ω	NC	†430Ω
V9	6CX8	-0Ω	47K	900Ω	FIL	FIL	-0Ω	2200Ω	† 7500Ω	†730Ω

ALL READINGS TAKEN IN "RECEIVE" POSITION UNLESS OTHERWISE DESIGNATED.
ALL CONTROLS SET AT MINIMUM EXCEPT SQUELCH CONTROL WHICH IS SET AT NORMAL POSITION.
† MEASURED FROM OUTPUT OF X2. ⊕ MEASURED IN "TRANSMIT" POSITION. NC NO CONNECTION

⊕ SEE PARTS LIST FOR ALTERNATE VALUE OR APPLICATION

1. DC voltage measurements taken with vacuum tube voltmeter; AC voltages measured with 1000 ohm per volt voltmeter.
2. Socket connections are shown as bottom views.
3. Measured values are from socket pin to common ground.
4. Line voltage maintained at 117 volts for voltage readings.
5. Nominal tolerance on component values makes possible a variation of ± 15% in voltage and resistance readings.

A PHOTOFACT STANDARD NOTATION SCHEMATIC

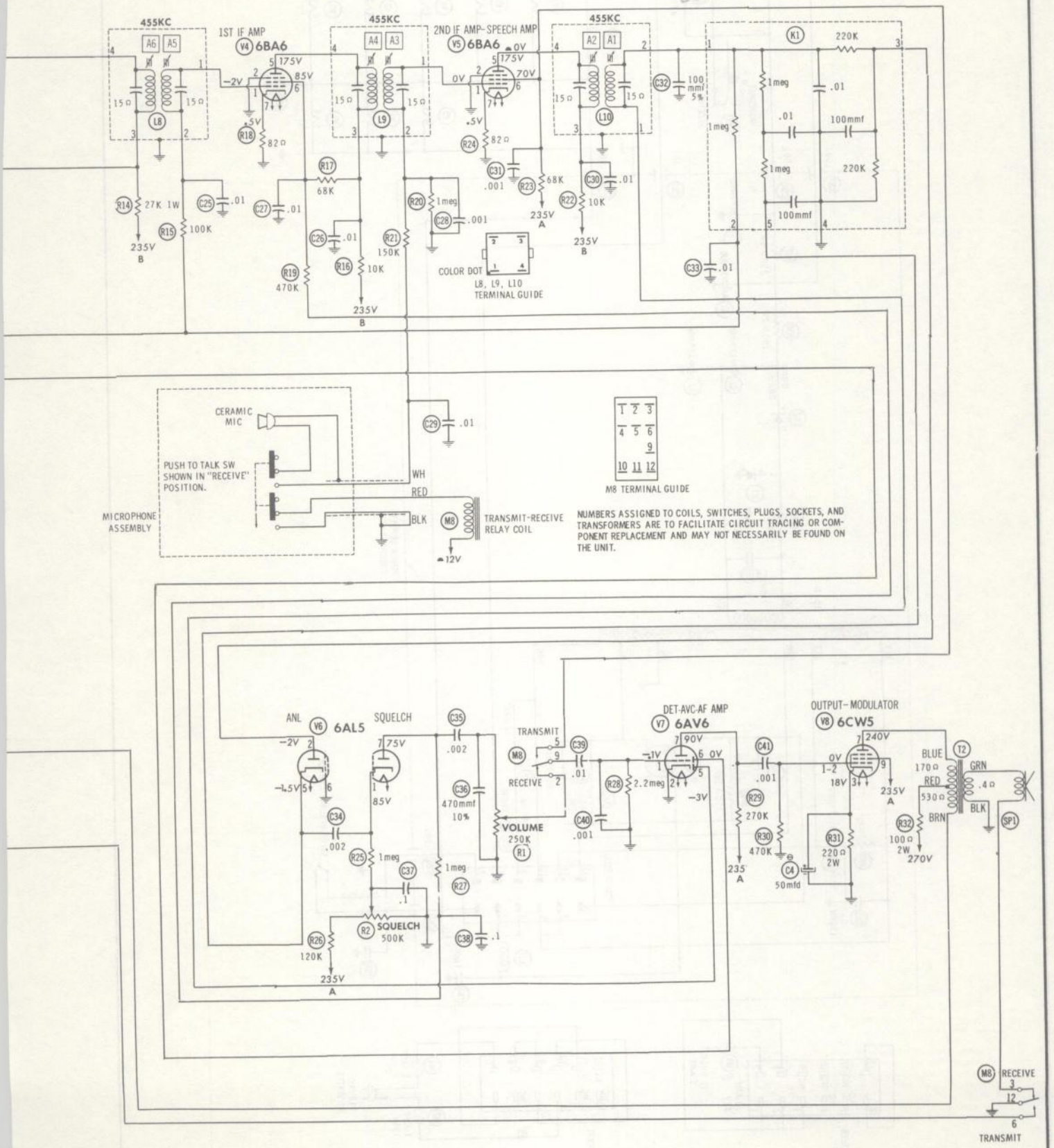

GONSET MODELS
G-14 (3430), G-14 (3433)

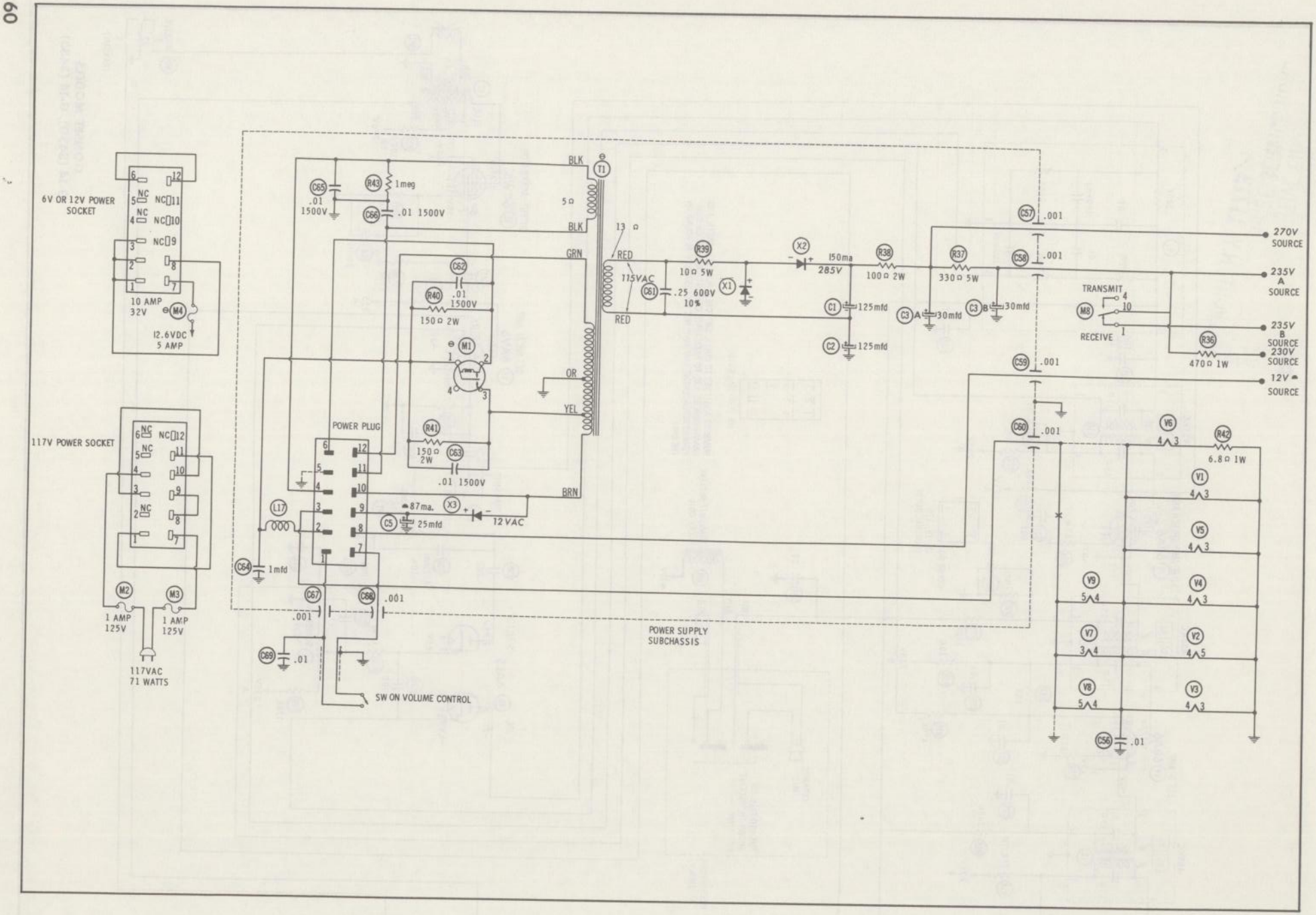
6V OR 12V POWER SOCKET
10 AMP 32V
M4
12.6VDC 5 AMP
117V POWER SOCKET
M2
M3
1 AMP 125V
1 AMP 125V
117VAC 71 WATTS
POWER PLUG
C65 .01 1500V
R43 1meg
C66 .01 1500V
C62 .01 1500V
R40 150Ω 2W
M1
R41 150Ω 2W
C63 .01 1500V
L17
C64 1mfd
C67 .001
C68 .001
C69 .01
C5 25mfd
87ma.
X3
12VAC
SW ON VOLUME CONTROL
BLK
T1
5Ω
BLK
13 Ω
GRN
RED
115VAC
RED
OR
YEL
BRN
R39 10Ω 5W
C61 .25 600V 10%
X1
X2
150ma
285V
R38 100Ω 2W
C1 125mfd
C2 125mfd
R37 330Ω 5W
C3A 30mfd
C3B 30mfd
C57 .001
C58 .001
C59 .001
C60 .001
TRANSMIT
M8
RECEIVE
R36 470Ω 1W
R42 6.8Ω 1W
V6
V1
V5
V9
V4
V7
V2
V8
V3
C56 .01
POWER SUPPLY SUBCHASSIS
270V SOURCE
235V A SOURCE
235V B SOURCE
230V SOURCE
12V SOURCE

ALIGNMENT INSTRUCTIONS

ALIGNMENT INSTRUCTIONS—READ CAREFULLY BEFORE ATTEMPTING ALIGNMENT
Best results are obtained when adjusting A12 and A13 if the antenna normally used is connected and the unit is as nearly in the cabinet as possible. Suggested Alignment Tools: A1 thru A7.....GENERAL CEMENT #5097, 8727 WALSCO #2515 A8 thru A11.....GENERAL CEMENT #8282, 8606, 8606-L, 9091 WALSCO #2526, 2541, 2542, 2543, 2544 A12 thru A17.....GENERAL CEMENT #5000, 5003, 5066, 8276, 8290, 9087, 9089 WALSCO #2512, 2525, 2528

RECEIVER ALIGNMENT

Connect DC VTVM between point (A) and ground.
Use only enough generator output to provide a usable indication.

SIGNAL GENERATOR	CHANNEL	ADJUST	REMARKS
High side thru .05mfd to pin 7 (grid) of Converter, low side to ground. Tune to 455KC (Unmod.)	ANY	A1, A2, A3, A4, A5, A6	Adjust for maximum deflection.
High side thru .05mfd to pin 7 (grid) of Converter, low side to ground. Tune to 1650KC (Unmod.)	Center Channel	A7	Adjust for maximum deflection.
High side thru .05mfd to pin 2 (grid) of 1650KC Mixer, low side to ground. Tune to 1650KC (Unmod.)	ANY	A8, A9	"
High side to antenna input, low side to ground. Tune to Channel Frequency.	Center Channel	A10	"

TRANSMITTER ADJUSTMENTS

ONLY THOSE PERSONS PROPERLY LICENSED ARE PERMITTED TO MAKE REPAIRS OR ADJUSTMENTS WHICH MAY RESULT IN ILLEGAL OPERATION. (REFER TO FCC RULES & REGULATIONS PART 19, SUBPART D, SECTION 19.71)

SPECIAL INSTRUCTIONS	INDICATOR	ADJUST	REMARKS
Connect antenna dummy load to antenna input. Set transmitter for center channel operation.	Connect VTVM to point (B), common to ground.	A11	Adjust for maximum deflection.
"	Indicator light on front panel or RF wattmeter.	A12, A13	Adjust for maximum indication until no difference in output is noticed when switching channels. Slight readjustment may be necessary when the unit is reconnected to the antenna.
Connect Antenna	Use Frequency measuring device or receiver of known accuracy.	A14, A15, A16, A17	Adjust so that associated crystal falls in the exact center of the specified channel.

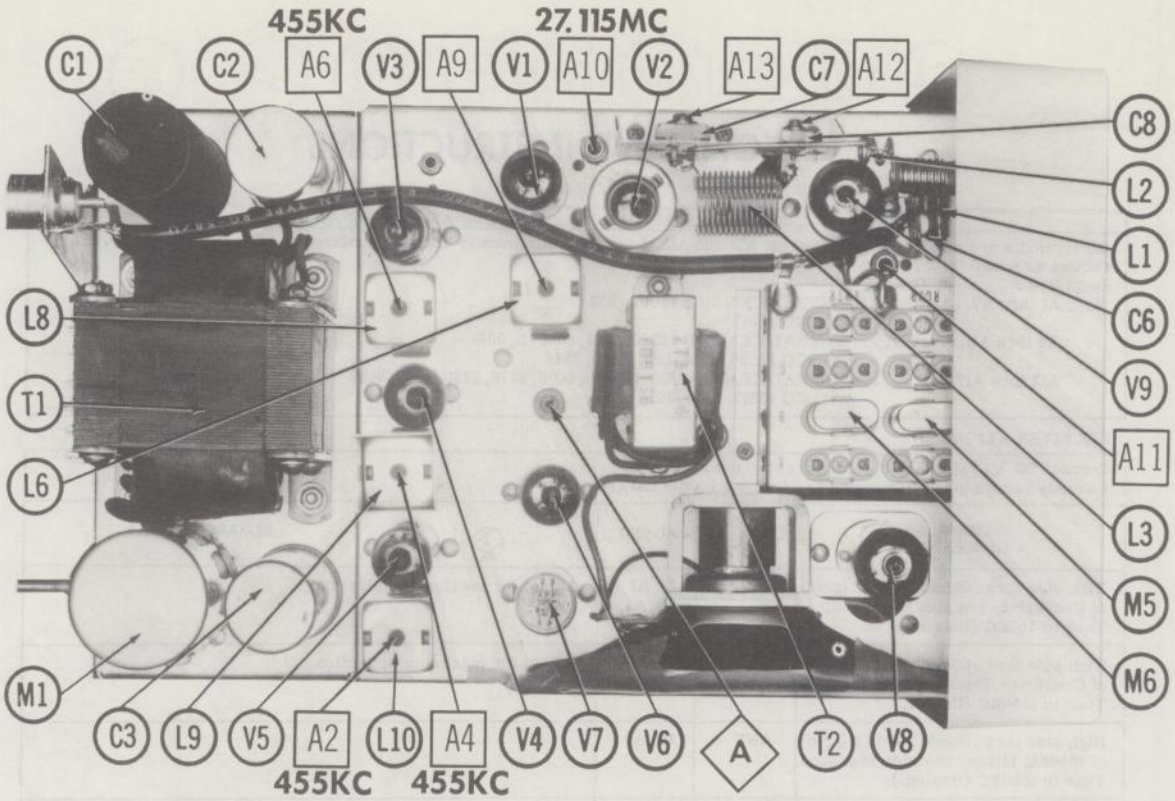

CHASSIS TOP VIEW

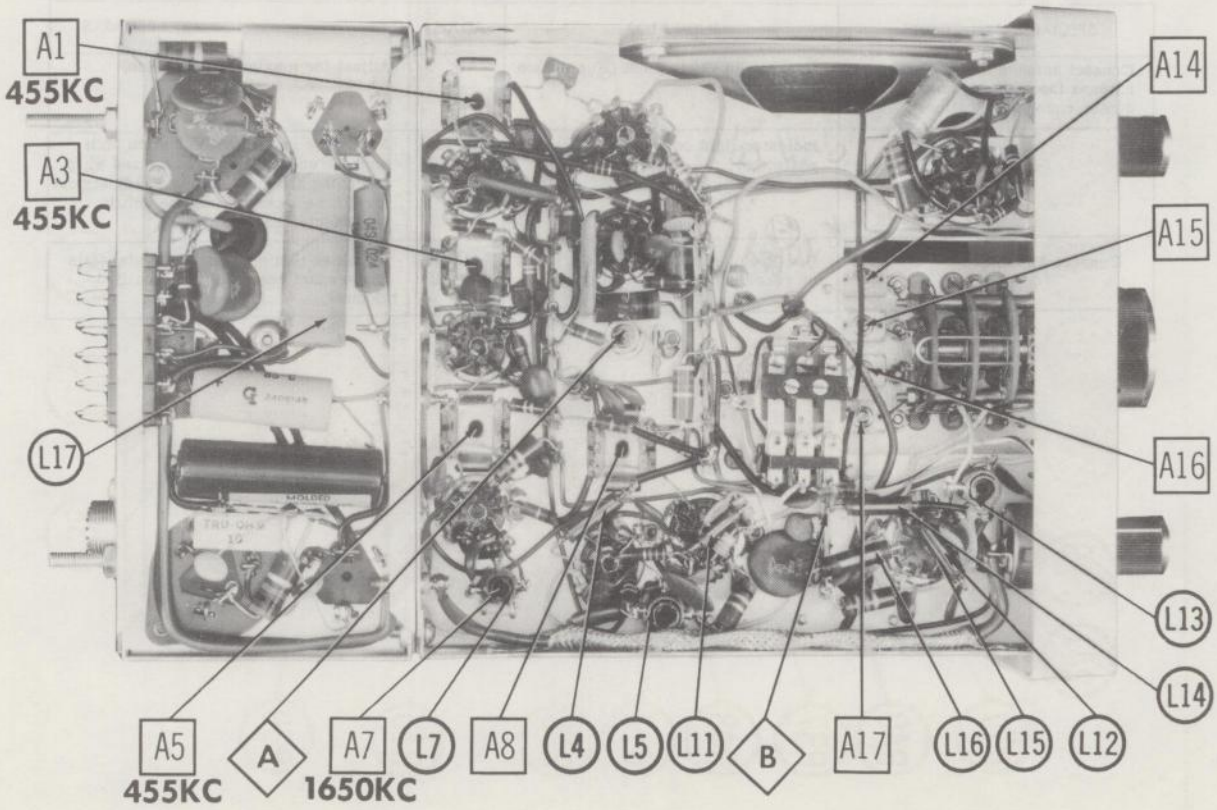

CHASSIS BOTTOM VIEW- ALIGNMENT & INDUCTOR IDENT.

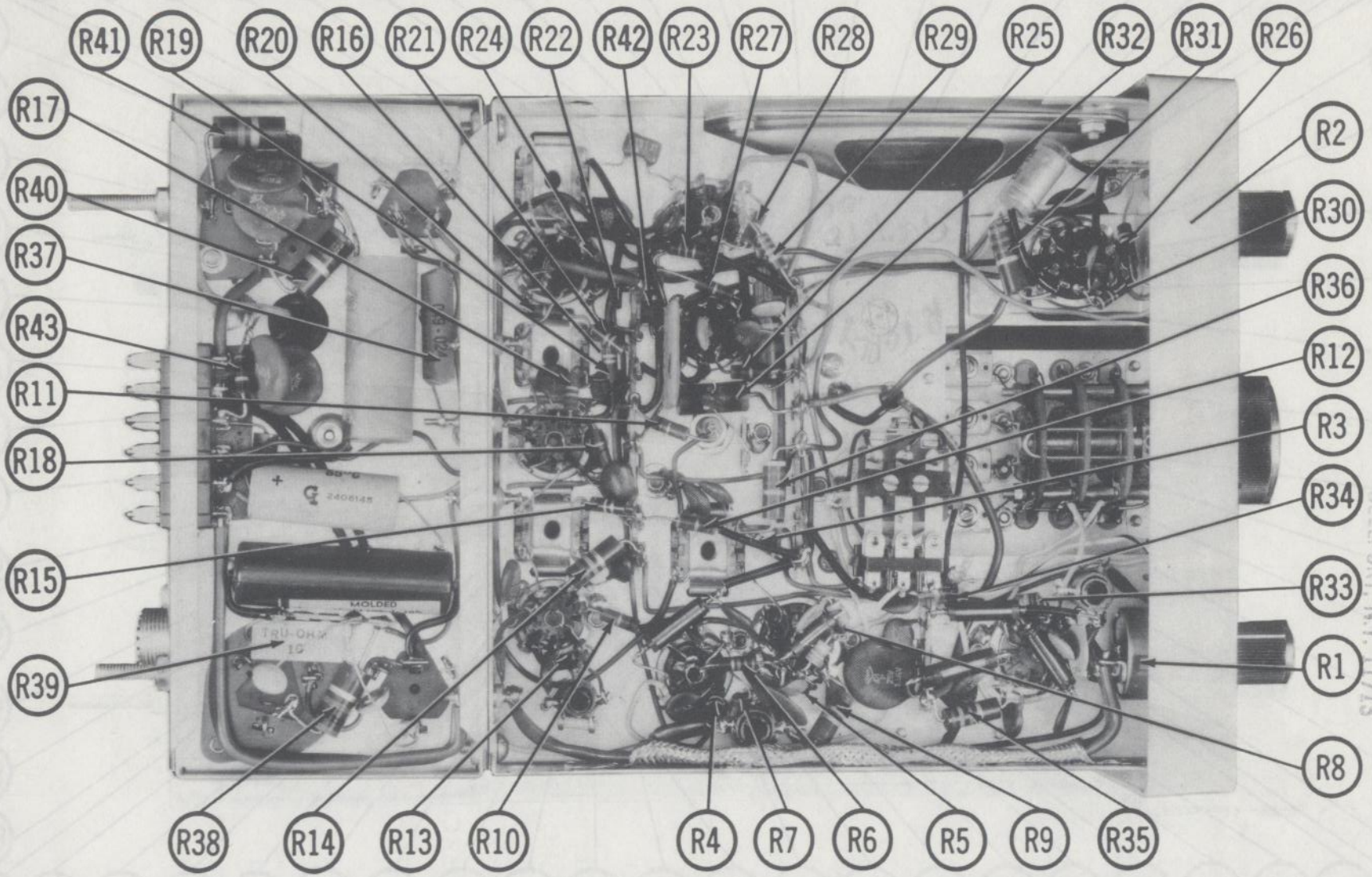

CHASSIS BOTTOM VIEW- RESISTOR IDENT.

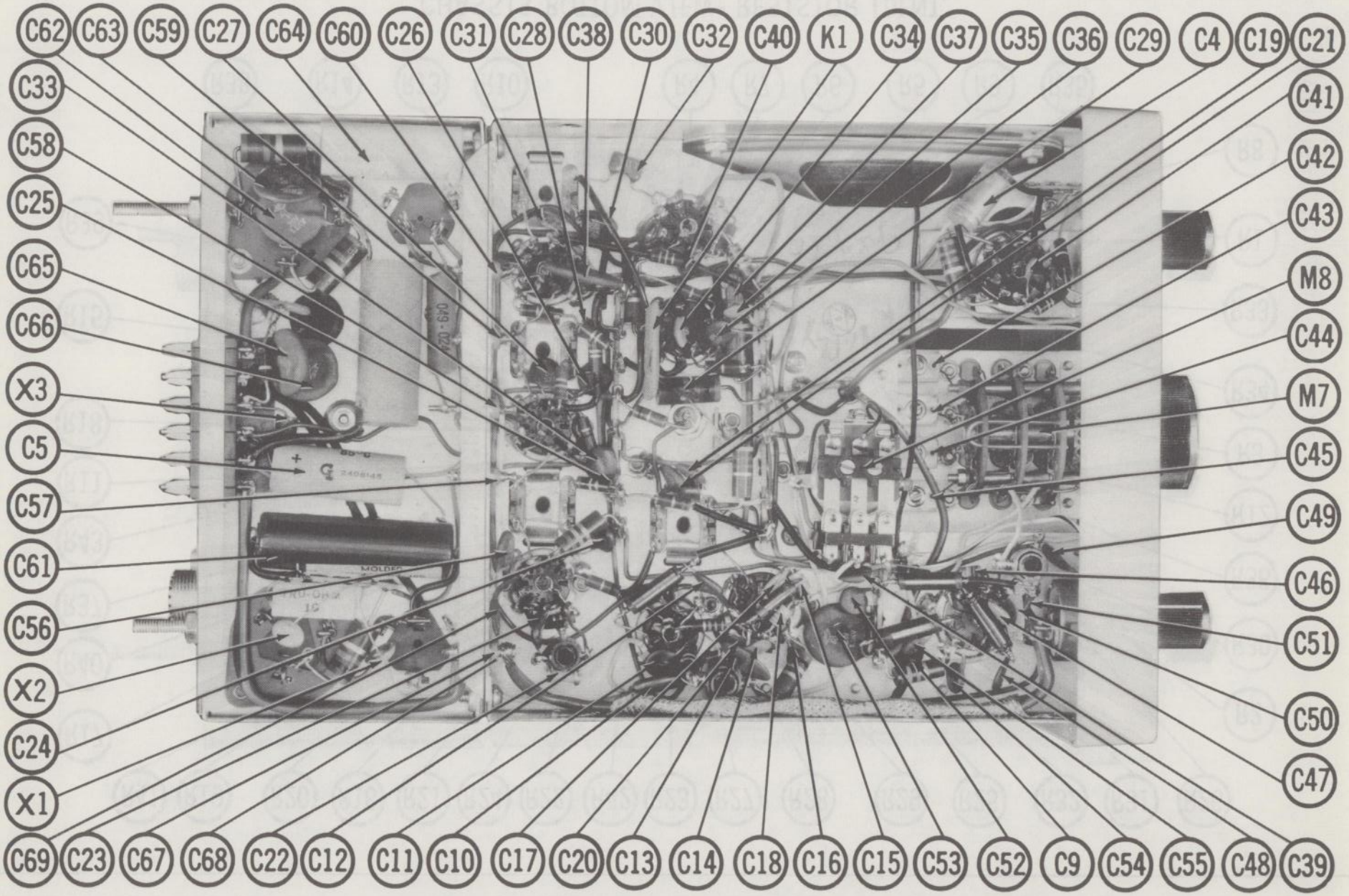

CHASSIS BOTTOM VIEW- CAPACITOR & MISC. IDENT.

PARTS LIST AND DESCRIPTION

WIRING DATA

General-use Hook-up Wire	Use BELDEN No.	8530 (Solid) Available in 12 Colors
		8524 (Stranded) Available in 12 Colors
Shielded Antenna Lead	Use BELDEN No.	8214 Lowest Loss (RG-8/U Type)
		8237 Low Loss (RG-8/U)
		8240 (Solid) Miniature (RG-58/U)
		8259 (Stranded) Miniature (RG-58A/U)
Coiled Microphone Cable	Use BELDEN No.	8497 3 Conductor - 1 Shielded for Press-to-Talk (Neoprene)
		8496 3 Conductor - 1 Shielded for Press-to-Talk (Vinyl)
Ignition Noise Suppression	Use BELDEN No.	7300-Series Spark-Plug Sets
Bonding Strap	Use BELDEN No.	8661 (3/8 In.)

TUBES

◆ AMPEREX ◆ GENERAL ELECTRIC ◆ RCA ◆ RAYTHEON ◆ SYLVANIA ◆

ITEM No.	USE	TYPE
V1	RF Amp.	6BZ6
V2	1650KC Mixer-Rec. Crystal Osc.	6U8A
V3	Converter	6BE6
V4	1st IF Amp.	6BA6
V5	2nd IF Amp. - Speech Amp.	6BA6
V6	Ani. - Squelch	6AL5
V7	Det. - AVC - AF Amp.	6AV6
V8	Output-Modulator	6CW5
V9	Transmit Osc. - Final Amp.	6CX8

POWER RECTIFIERS & SIGNAL DIODES

ITEM No.	CURRENT RATING (Measured)	ORIGINAL Part or Type No.	RECTIFIERS RCA PART No.	RECTIFIERS SARKES TARZIAN PART No.	DIODES	NOTES
X1	.150A	474-025	1N3194	F4		HV Rectifier
X2	.150A	474-025	1N3194	F4		HV Rectifier
X3	.087A	474-004	1N3194	2F4		LV Relay Control

ELECTROLYTIC CAPACITORS

ITEM No.	RATING CAP.	RATING VOLT.	GONSET PART No.	AEROVOX PART No.	CORNELL-DUBILIER PART No.	GENERAL ELECTRIC PART No.	MALLORY PART No.	PYRAMID PART No.	SPRAGUE PART No.
C1	125	200	073-018	AFH1-25-60	XA0312	XC1-14	FP122		TVLS-1470*
C2	125	200	073-019	AFH1-25-60	XA0312	XC1-14	FP122		TVLS-1470*
C3A	30	350	073-026	AFH2-39	B0310	XC3-11	FP227.3	TMD2385	TVL-2628
B	30	350							
C4	25	25	073-002 ①	PTT82	NLW25-25	MT1-11	TT25X25	MLV25-25	TE-1207
C5	50	25	073-118	PRS1265	BR50-25	QT1-15	TC29	TD-50-25	TVA-1206

* Not normally in distributor's stock. Available thru distributor on order to manufacturer.
① Model G14(3433) uses 250mfd 50V in this application (Part #073-078).

FIXED CAPACITORS

ITEM No.	RATING	REMARKS	AEROVOX PART No.	CENTRALAB PART No.	CORNELL-DUBILIER PART No.	ELMENCO PART No.	MALLORY PART No.	SPRAGUE PART No.
C6	100 5%		ADM-15-101	TCZ-100	22R5T1	VCM-20-101	MCE 235	MS-31
C7	110-580	#089-024				467		
C8	4-40	#089-005				422		
C9	2.2 10%			TCZ-2R2				10TCC-V22
C10	.02		BPD-02	DD-203	BYB6S2		GP120	5HK-S20
C11	.01		BPD-01	DD-103	BYA10S1	CCD-103	GP110	5HK-S10
C12	.01		BPD-01	DD-103	BYA10S1	CCD-103	GP110	5HK-S10
C13	82 NPO 10%			DTZ-82	C10Q82C	CCTO-820	CNO-482	10TCC-Q82
C14	27 10%			DD-270	L10Q27	CCD-270	GP427	10TS-Q27
C15	4.7 10%			TCZ-4R7				10TCC-V47
C16	.01		BPD-01	DD-103	BYA10S1	CCD-103	GP110	5HK-S10
C17	30 NPO 10%			TCZ-30	C10Q3C	CCTC-300		10TCC-Q30
C18	.68			TCZ-R68				
C19	.01		BPD-01	DD-103	BYA10S1	CCD-103	GP110	5HK-S10

FIXED CAPACITORS (cont)

ITEM No.	RATING	REMARKS	AEROVOX PART No.	CENTRALAB PART No.	CORNELL-DUBILIER PART No.	ELMENCO PART No.	MALLORY PART No.	SPRAGUE PART No.
C20	.01		BPD-01	DD-103	BYA10S1	CCD-103	GP110	5HK-S10
C21	.01		BPD-01	DD-103	BYA10S1	CCD-103	GP110	5HK-S10
C22	22 N330 5%	#084-244						
C23	100 5%		ADM-15-101	TCZ-100	22R5T1	VCM-20-101	MCE235	MS-31
C24	.01		BPD-01	DD-103	BYA10S1	CCD-103	GP110	5HK-S10
C25	.01		BPD-01	DD-103	BYA10S1	CCD-103	GP110	5HK-S10
C26	.01		BPD-01	DD-103	BYA10S1	CCD-103	GP110	5HK-S10
C27	.01		BPD-01	DD-103	BYA10S1	CCD-103	GP110	5HK-S10
C28	.001		BPD-001	DD-102	BYA10D1	CCD-102	GP210	5HK-D10
C29	.01		BPD-01	DD-103	BYA10S1	CCD-103	GP110	5HK-S10
C30	.01		BPD-01	DD-103	BYA10S1	CCD-103	GP110	5HK-S10
C31	.001		BPD-001	DD-102	BYA10D1	CCD-102	GP210	5HK-D10
C32	100 5%		ADM-15-101	TCZ-100	22R5T1	VCM-20-101	MCE235	MS-31
C33	.01		BPD-01	DD-103	BYA10S1	CCD-103	GP110	5HK-S10
C34	.002		BPD-002	DD-202	BYA10D2	CCD-202	GP220	5HK-D20
C35	.002		BPD-002	DD-202	BYA10D2	CCD-202	GP220	5HK-D20
C36	470 10%		DI-470	DD-471	5R5T47	CCS-471	GP347	10TS-T47
C37	.1 200V		P288N-1		MP2P1	2DP-3-104	GEM-201	2PS-P10
C38	.1						GEM-201	2PS-P10
C39	.01		BPD-01	DD-103	BYA10S1	CCD-103	GP110	5HK-S10
C40	.001		BPD-001	DD-102	BYA10D1	CCD-102	GP210	5HK-D10
C41	.001		BPD-001	DD-102	BYA10D1	CCD-102	GP210	5HK-D10
C42	3-35	#089-006				403		
C43	3-35	#089-006				403		
C44	3-35	#089-006				403		
C45	3-35	#089-006				403		
C46	2.2 5%			TCZ-2R2				10TCC-V22
C47	68 N750 10%		N750-DI 68	TCN-68	C10Q68U	CCTN-680	CN7-468	10TCU-Q68
C48	.01		BPD-01	DD-103	BYA10S1	CCD-103	GP110	5HK-S10
C49	.01		BPD-01	DD-103	BYA10S1	CCD-103	GP110	5HK-S10
C50	51 NPO 5%			TCZ-51	C10Q51C			
C51	68 NPO 10%		NPO-DI 68	TCZ-68	C10Q68C	CCTO-680	CNO-468	10TCC-Q68
C52	.001 1000V		BPD-001	DD-102	BYA10D1	CCD-102	GP210	5HK-D10
C53	.01		BPD-01	DD-103	BYA10S1	CCD-103	GP110	5HK-S10
C54	.001		BPD-001	DD-102	BYA10D1	CCD-102	GP210	5HK-D10
C55	470 1000V		1468-00047			VCM-20-471		
C56	.01		BPD-01	DD-103	BYA10S1	CCD-103	GP110	5HK-S10
C57	.001		EF-001	FT-1000		CCF-102	CT-280	
C58	.001		EF-001	FT-1000		CCF-102	CT-280	
C59	.001		EF-001	FT-1000		CCF-102	CT-280	
C60	.001		EF-001	FT-1000		CCF-102	CT-280	
C61	.25 600V 10%		P688N-25		MP6P25	6DP-5-254	GEM-6025	6PS-P25
C62	.01 1500V			DD16-103	HVE16S1	16CP-4-103		BL-S10
C63	.01 1500V			DD16-103	HVE16S1	16CP-4-103		BL-S10
C64	1mfd 100V		P288N-1.0		MP2W1	1DP-5-105	GEM-21	
C65	.01 1500V			DD16-103	HVE16S1	16CP-4-103		BL-S10
C66	.01 1500V			DD16-103	HVE16S1	16CP-4-103		BL-S10
C67	.001		EF-001	FT-1000		CCF-102	CT-280	
C68	.001		EF-001	FT-1000		CCF-102	CT-280	
C69	.01		BPD-01	DD-103	BYA10S1	CCD-103	GP110	5HK-S10

\# Gonset Part Number.

CONTROLS

All wattages 1/2 watt, or less, unless otherwise listed.

ITEM No.	USE	RESISTANCE	GONSET PART No.	CENTRALAB PART No.	CLAROSTAT PART No.	CTS-IRC PART No.	MALLORY PART No.
R1	Volume & Switch	250K	052-081	B-51, KR-1, or (F2-250, KR-1, SU204)	A47-250K-Z, SWE-12, FS-3	Q13-130, 76-1, or (BU1, CF23, SS1, GC)*	U44, US-26, or (UA54A, US-41, SF1000)
R2	Squelch	500K	052-082A	B-59, or (F1-500K, SU204)	A47-500K-S, FS-3	Q11-133, or (BU1, CF16, SS1, DC)*	U50, or (UA55L, SF1000)

* "SNAPTROL"

PARTS LIST AND DESCRIPTION (CONTINUED)

RESISTORS

All wattages 1/2 watt, or less, unless otherwise listed.

ITEM No.	RATING	REPLACEMENT DATA		
		IRC PART No.	WORKMAN PART No.	REMARKS
R3	91meg			
R4	22K			
R5	1meg			
R6	2200Ω			
R7	68K			
R8	100K			
R9	10K 1W			
R10	1000Ω			
R11	1meg			
R12	2.2meg			
R13	22K			
R14	27K 1W			
R15	100K			
R16	10K			
R17	68K			
R18	82Ω			
R19	470K			
R20	1meg			
R21	150K			
R22	10K			
R23	68K			
R24	82Ω			
R25	1meg			
R26	120K			(270K)*
R27	1meg			
R28	2.2meg			
R29	270K			
R30	470K			
R31	220Ω 2W			
R32	100Ω 2W			
R33	47K			
R34	2200Ω			
R35	6800Ω 1W			
R36	470Ω 1W			
R37	330Ω 5W	PW5-330	5W-SQ-330	
R38	100Ω 2W			
R39	10Ω 5W	PW5-10	5W-SQ-10	
R40	150Ω 2W			
R41	150Ω 2W			
R42	6.8Ω 1W			
R43	1meg			

* Used in early versions.

COILS (RF-IF)

ITEM No.	USE	REPLACEMENT DATA					NOTES
		GONSET PART No.	Merit PART No.	Miller PART No.	Stancor PART No.	Workman PART No.	
L1	RF (.56uh)	027-077	TV-239	4588	RTC-8513	T958	
L2	Indicator Shunt	011-118A					
L3	Final	012-512					
L4	RF (5.6uh)	027-028	BC-565	4609	RTC-8519	T959	
L5	Rec. RF	012-414				T216	
L6	1650KC IF	014-032					
L7	Rec. Osc.	012-511					
L8	1st 455KC IF	014-086	BC-352	12-C1	RTC-8632	T607	
L9	2nd 455KC IF	014-086	BC-353	12-C2	RTC-8633	T608	
L10	3rd 455KC IF	014-086	BC-353	12-C2	RTC-8633	T608	
L11	Rec. Osc. Choke	027-004				T959	
L12	Trans. Osc. Choke	027-028	BC-565	4609	RTC-8519	T959	
L13	Osc. Doubler	012-415		4304		T216	
L14	RF (5.6uh)	027-028	BC-565	4609	RTC-8519	T959	
L15	RF (.47uh)	027-073					
L16	RF (15uh)	027-032		4624			
L17	Hash Choke (4uh)						

TRANSFORMER (POWER)

ITEM No.	RATING			REPLACEMENT DATA					NOTES
	PRI.	SEC. 1	SEC. 2	GONSET PART No.	MERIT PART No.	STANCOR PART No.	THORDARSON PART No.	TRIAD PART No.	
T1	117VAC @ .65A (.68A) * (or) 12.6VDC @ 5A (5.2A) *	115VAC @ .14ADC (.15A) *	12.6VAC @ 2A	271-068E (271-071C) ①					* Transmit ①Alternate Part Number.
		SEC. 4	SEC. 5						

TRANSFORMER (AUDIO OUTPUT)

ITEM No.	IMPEDANCE		REPLACEMENT DATA					NOTES
	PRI.	SEC.	GONSET PART No.	Merit PART No.	Stancor PART No.	Thordarson PART No.	Triad PART No.	
T2	11000Ω Tap @ 3600Ω	3-4Ω	273-016					

SPEAKER

ITEM No.	TYPE			REPLACEMENT DATA		NOTES
	SIZE	FIELD	V. C. IMP.	GONSET PART No.	QUAM PART No.	
SP1	3"x 5"	PM	3-4Ω	152-023	35A05	

COMPONENT COMBINATIONS

ITEM No.	USE	DESCRIPTION	GONSET PART No.	REPLACEMENT DATA
K1	Det.-Squelch Net	(3) 100mmf, .01mfd, (2) 220K, (3) 1meg		

VIBRATOR

ITEM No.	TYPE	INPUT VOLTS	FRE-QUENCY	REPLACEMENT DATA			NOTES
				GONSET PART No.	CORNELL-DUBILIER PART No.	MALLORY PART No.	
M1	Interrupter	12	115~	117-003	6371	G-1601	Model G-14 (3430)
	Interrupter	6	115~	117-008	5371	1601	Model G-14 (3433)

FUSES

ITEM No.	TYPE	RATING	REPLACEMENT DATA					
			GONSET PART No.		LITTELFUSE PART No.		BUSS PART No.	
			FUSE	HOLDER	FUSE	HOLDER	FUSE	HOLDER
M2	3AG S/B	1A 125V	482-055		313001 (3AG 1A 125V) S/B		MDL1	
M3	3AG S/B	1A 125V	482-055		313001 (3AG 1A 125V) S/B		MDL1	
M4	3AG	10A 32V	482-007 ①		311010 (3AG 10A 32V)	155020	AGC10	HHJ-B
	3AG	20A 32V	482-008 ②		307020 (3AG 20A 32V)	155020	AGC20	HRJ

① Model G-14 (3430) only.
② Model G-14 (3433) only.

MISCELLANEOUS

ITEM No.	PART NAME	GONSET PART No.	NOTES
M5	Crystal		Receive } Specify Model and Channel Desired
M6	Crystal		Transmit } Specify Model and Channel Desired
M7	Switch	171-096C	Channel Selector (Rotary Wafer Type)
M8	Relay, 12V	111-091	Receive-Transmit
	Relay, 6V	111-090	Receive-Transmit
	Microphone	113-021	Ceramic
	Power Cable	678-031	AC
	Power Cable	678-030	12 Volt DC
	Power Cable	678-032	6 Volt DC

CABINETS & CABINET PARTS

(When Ordering Cabinets & Cabinet Parts, Specify Model, Chassis & Color)

NAME	PART NO.	DESCRIPTION
Knob	211-071	Small
Knob	211-073	Large
Cabinet	465-066A	
Front Panel	441-037	

PHOTOFACT® Folder

HALLICRAFTERS MODEL CB-3

NOTICE

ONLY THOSE PERSONS PROPERLY LICENSED ARE PERMITTED TO MAKE REPAIRS OR ADJUSTMENTS WHICH MAY RESULT IN ILLEGAL OPERATION. (REFER TO FCC RULES & REGULATIONS PART 19, SUBPART D, SECTION 19.71)

TRADE NAME	Hallicrafters Model CB-3
MANUFACTURER	The Hallicrafters Co., 4400 W. 45th Street, Chicago 32, Illinois
TYPE SET	AC-Battery Operated 7 Tube Citizens Band Transmitter-Receiver
POWER SUPPLY	110 — 120 Volts AC (or) 12 Volt Storage Battery
RATING	48 Watts, .49 Amp. @117 Volts AC (Receive) 52 Watts, .53 Amp. @117 Volts AC (Transmit) 4.2 Amp. @12.6 Volts DC (Receive) 4.3 Amp. @12.6 Volts DC (Transmit)
TUNING RANGE	Any one of eight Citizens Band Channels 2 thru 23

HALLICRAFTERS MODEL CB-3

DIAL CORD STRINGING

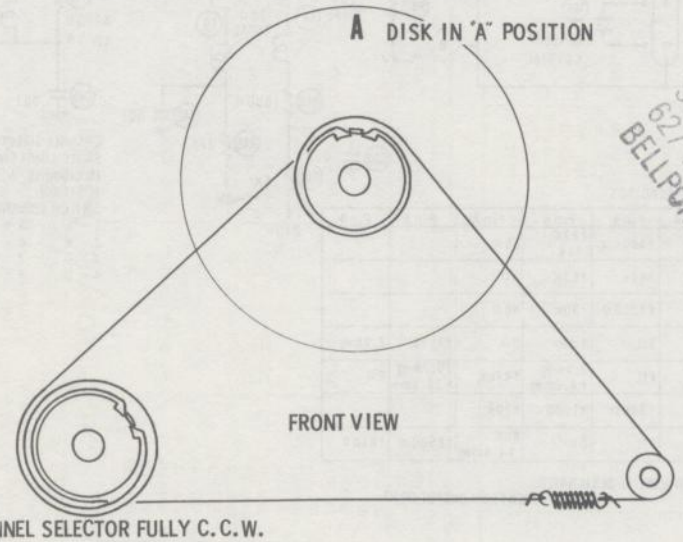

CHANNEL SELECTOR FULLY C.C.W.

HOWARD W. SAMS & CO., INC. Indianapolis 6, Indiana

LY442

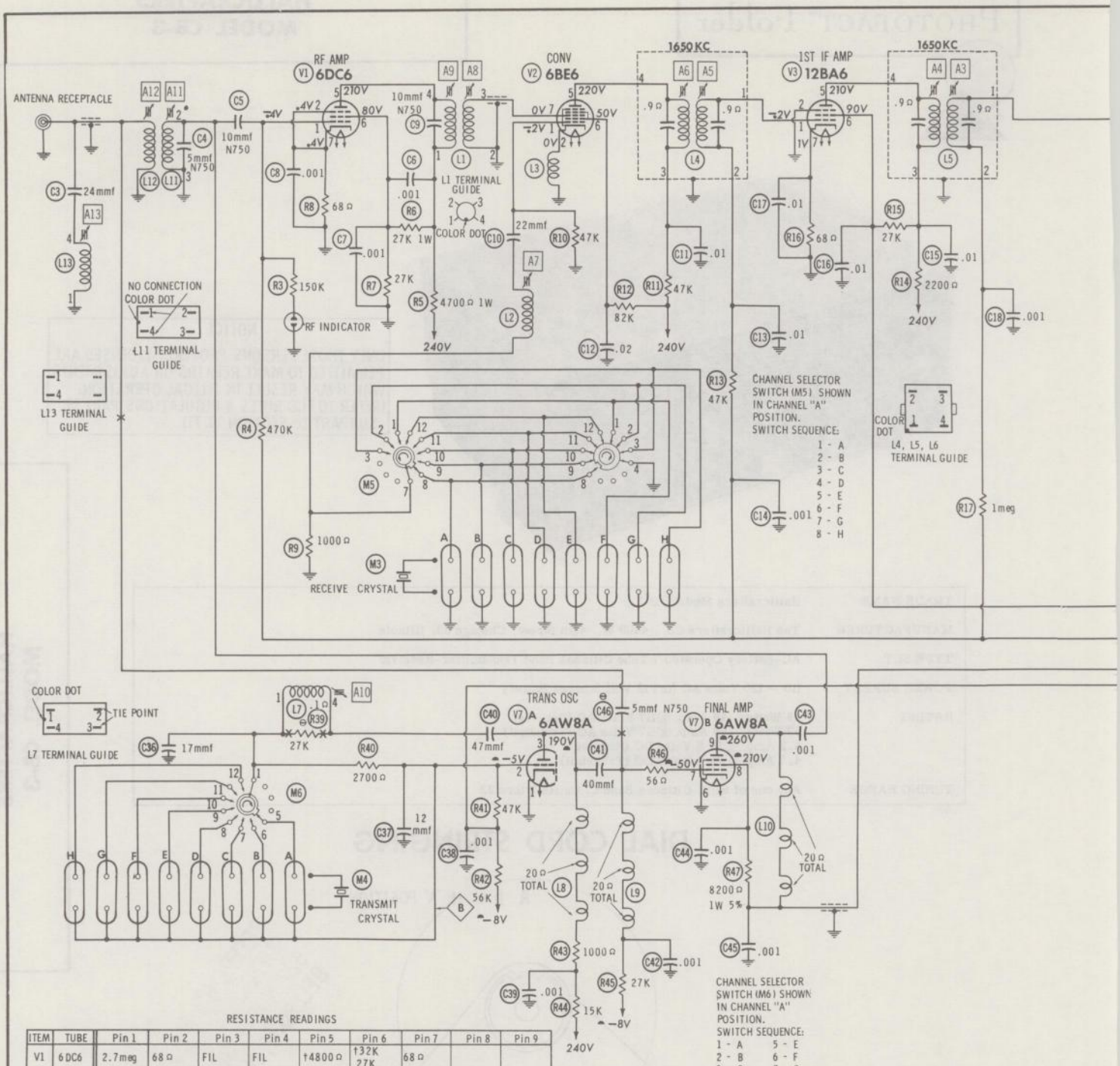

RESISTANCE READINGS

ITEM	TUBE	Pin 1	Pin 2	Pin 3	Pin 4	Pin 5	Pin 6	Pin 7	Pin 8	Pin 9
V1	6DC6	2.7meg	68Ω	FIL	FIL	†4800Ω	†32K 27K	68Ω		
V2	6BE6	47K	1Ω	FIL	FIL	†48K	†83K	0Ω		
V3	12BA6	2meg	0Ω	FIL	FIL	†3200Ω	†30K	68Ω		
V4	6AZ8	†3200Ω	†4800Ω	150Ω	FIL	FIL	3meg	0Ω	†157K	2.2meg
V5	6BN8	450K	1.5meg	0Ω	FIL	FIL	2.5meg †4.2meg	†470K	10.7meg †12.4meg	0Ω
V6	12AQ5	470K	330Ω	FIL	FIL	†399Ω	†1000Ω	470K		
V7	6AW8A	0Ω	47K †1.6meg	†17K	FIL	FIL	0Ω	80K †1.6meg	†8500Ω	†410Ω

ALL VOLTAGES TAKEN IN "RECEIVE" POSITION UNLESS OTHERWISE DESIGNATED.

† MEASURED FROM OUTPUT OF X1. † MEASURED FROM OUTPUT OF X3.

⌒ MEASURED IN TRANSMIT POSITION.

⊖ SEE PARTS LIST FOR ALTERNATE VALUE OR APPLICATION

1. DC voltage measurements taken with vacuum tube voltmeter.
2. Socket connections shown as bottom views.
3. Measured values are from socket pin to common ground.
4. Battery voltage maintained at 12.6 volts for voltage readings.
5. Nominal tolerance on component values makes possible a variation of ±15% in voltage and resistance readings.
6. Volume control at maximum, no signal applied for voltage measurements.

A PHOTOFACT STANDARD NOTATION SCHEMATIC

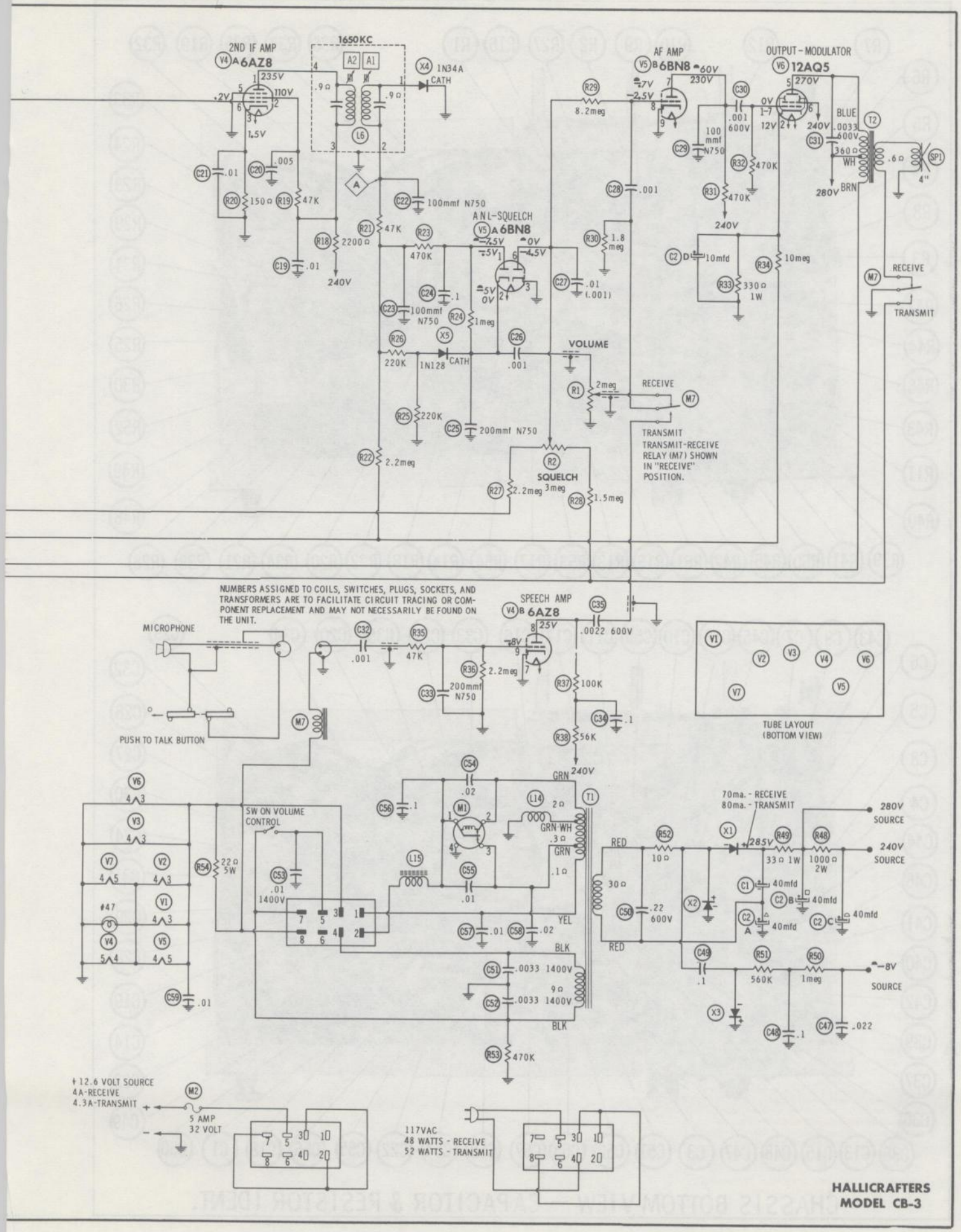

HALLICRAFTERS MODEL CB-3

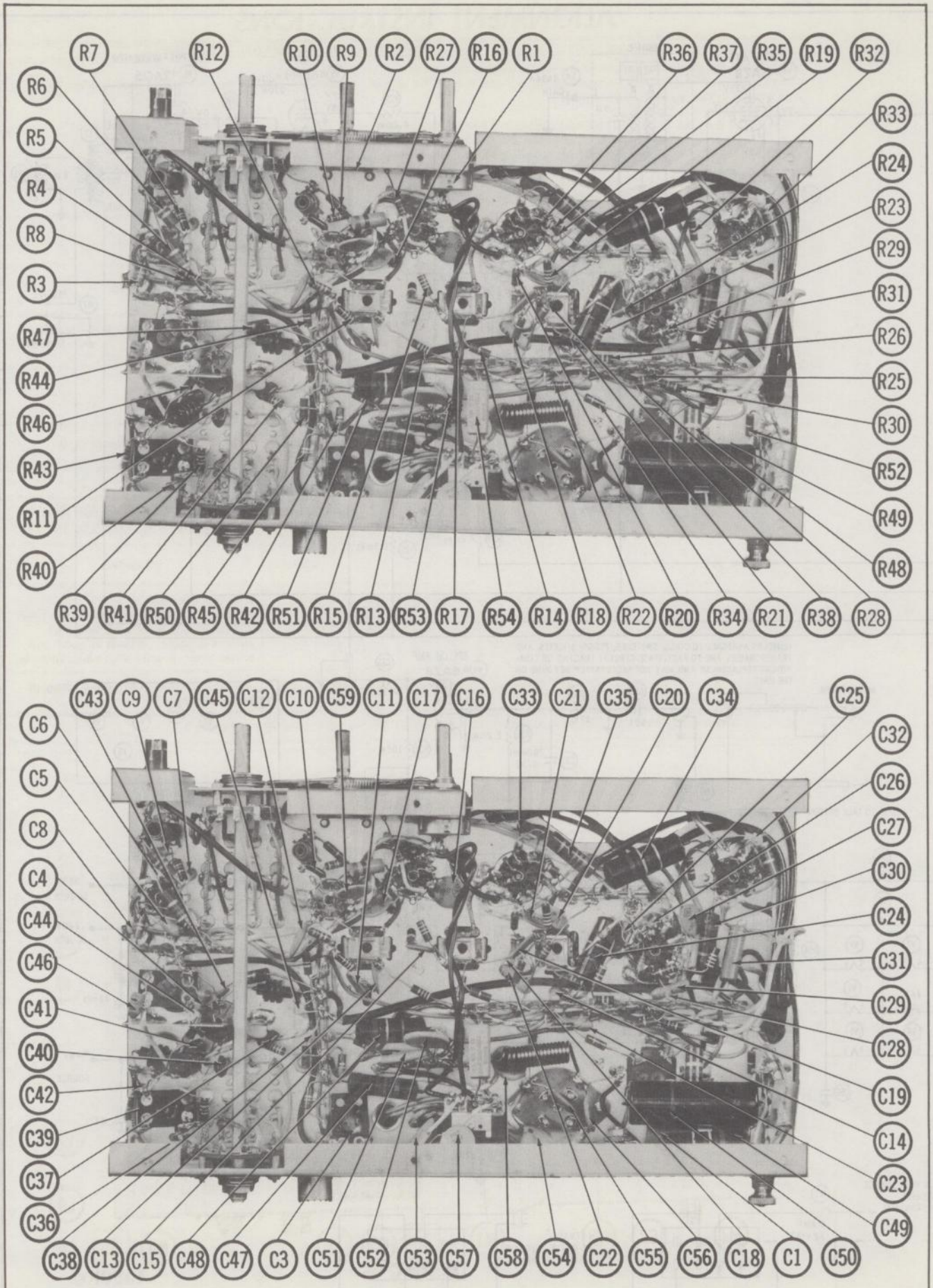

CHASSIS BOTTOM VIEW – CAPACITOR & RESISTOR IDENT.

ALIGNMENT INSTRUCTIONS

ALIGNMENT INSTRUCTIONS—READ CAREFULLY BEFORE ATTEMPTING ALIGNMENT

Use only enough generator output to provide a usable indication.
Best results will be obtained when adjusting A11 and A12, if the unit is connected to the antenna normally used and the unit is as nearly in the cabinet as possible.
Suggested Alignment Tools:

A1 thru A6..... GENERAL CEMENT #8607, 9291, 9294
WALSCO #2520, 2522, 2523, 2524, 2534, 2537, 2538
A7, A8, A9..... GENERAL CEMENT #8282, 8606, 8606-L, 9295, 9440
WALSCO #2526, 2543, 2544, 2545
A10 thru A13..... GENERAL CEMENT #8282, 8606, 8606-L, 9091
WALSCO #2526, 2541, 2542, 2543, 2544

RECEIVER ALIGNMENT

Connect DC probe to (A) common to ground.

	SIGNAL GENERATOR	CHANNEL	ADJUST	REMARKS
1.	Tune to 1650KC (Unmod.). High side thru .01mfd to pin 7 (grid) of Converter, low side to ground.	Any	A1, A2, A3, A4, A5, A6	Remove Receiver crystal. Adjust for maximum deflection. Reinsert crystal.
2.	Tune to crystal frequency. High side to antenna receptacle, low side to ground.	Highest Channel Used	A7	Adjust for maximum deflection.
3.	"	"	A8, A9	Adjust for maximum on first peak from maximum CCW position.

TRANSMITTER ALIGNMENT

ONLY THOSE PERSONS PROPERLY LICENSED ARE PERMITTED TO MAKE REPAIRS OR ADJUSTMENTS WHICH MAY RESULT IN ILLEGAL OPERATION. (REFER TO FCC RULES & REGULATIONS PART 19, SUBPART D, SECTION 19.71)

	SPECIAL INSTRUCTIONS	INDICATOR	ADJUST	REMARKS
4.	Connect suitable load to antenna receptacle.	DC VTVM between (B) and ground.	A10	Key Transmitter. Adjust for maximum deflection. Rock A10 to each side of peak and note rate of dropoff. Adjust to point just below peak on side of gradual dropoff.
5.	"	RF Wattmeter or field strength meter.	A11, A12,	Adjust for maximum output. Repeat several times.
6.	A13 is adjusted for MINIMUM Transmitter interference on local TV Receivers tuned to Channel 2.			

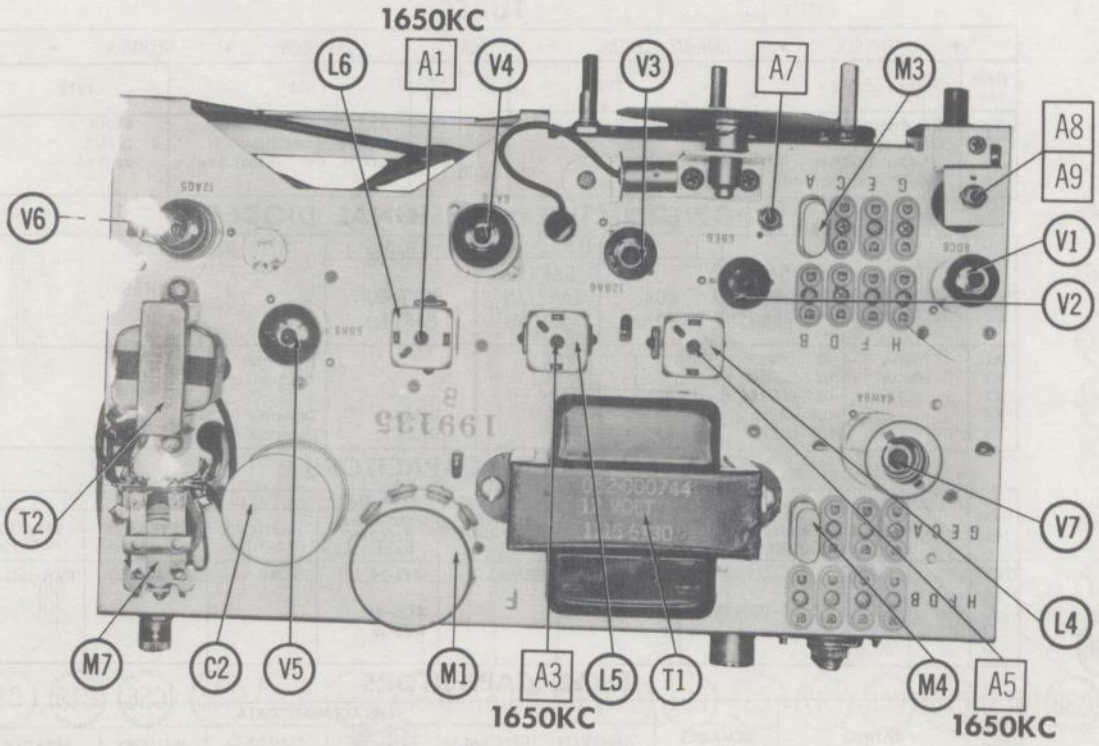

CHASSIS— TOP VIEW

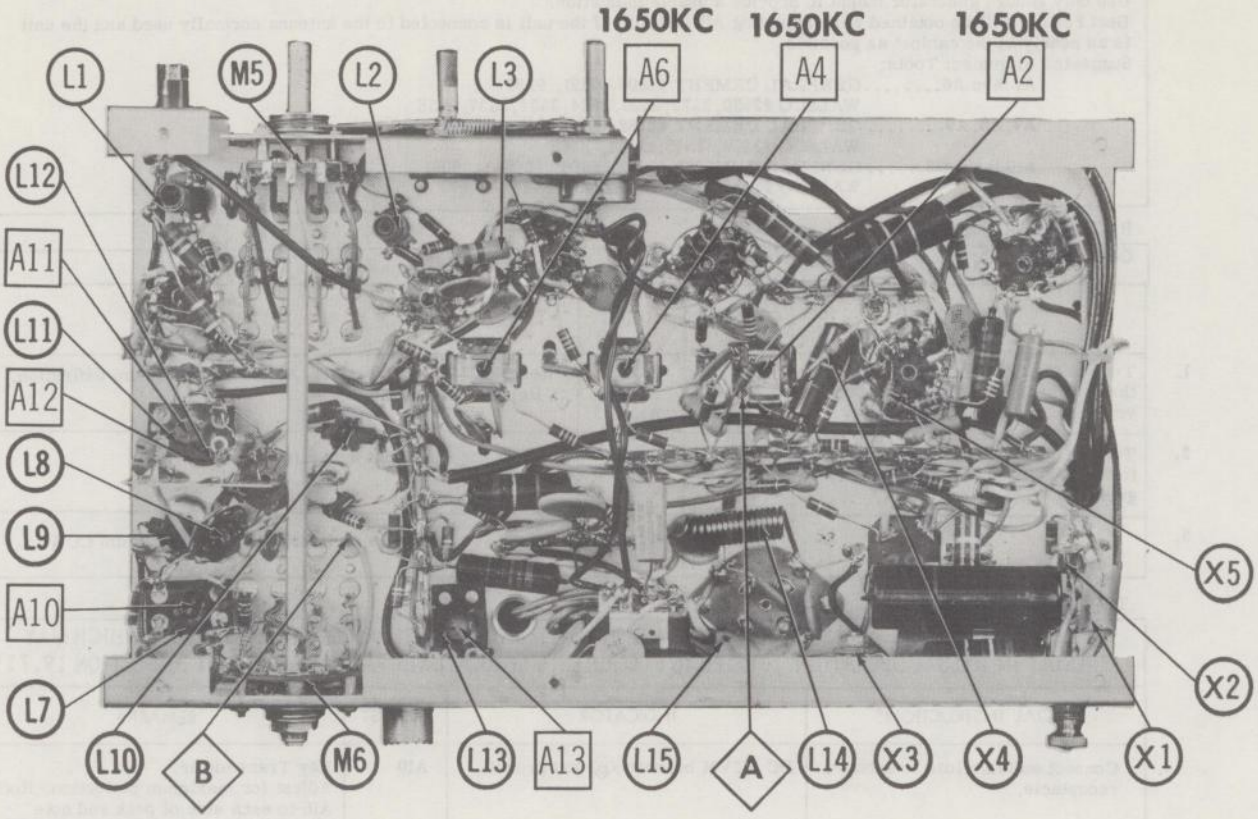

CHASSIS BOTTOM VIEW – ALIGNMENT, INDUCTOR & MISC. IDENT.

PARTS LIST AND DESCRIPTIONS

TUBES

◆ AMPEREX ◆ GENERAL ELECTRIC ◆ RCA ◆ RAYTHEON ◆ SYLVANIA ◆

ITEM No.	USE	TYPE
V1	RF Amplifier	6DC6
V2	Converter	6BE6
V3	1st IF Amplifier	12BA6
V4	2nd IF Amp. -Speech Amp.	6AZ8
V5	ANL-Squelch-AF Amp.	6BN8
V6	Output-Modulator	12AQ5
V7	Trans. Osc. -Final Amp.	6AW8A

POWER RECTIFIERS & SIGNAL DIODES

ITEM No.	CURRENT RATING (Measured)	ORIGINAL Part or Type No.	RECTIFIERS RCA PART No.	RECTIFIERS SARKES TARZIAN PART No.	DIODES RAYTHEON PART No.	NOTES
X1	.080A	027-000296 †	1N1763 †	2F4 †		† Silicon
X2	.080A	027-000296 †	1N1763 †	2F4 †		* Selenium
X3	.001A	027-000284 *	1N1763 †	10 *		
X4		019-101918			1N34A	Detector (1N34A)
X5		019-002718			1N128	Detector (1N128)

ELECTROLYTIC CAPACITORS

ITEM No.	RATING CAP.	RATING VOLT.	REPLACEMENT DATA Hallicrafters PART No.	AEROVOX PART No.	CORNELL-DUBILIER PART No.	GENERAL ELECTRIC PART No.	MALLORY PART No.	PYRAMID PART No.	SPRAGUE PART No.
C1	40	200	045-000633	PRS1580	BR40-250	QT1-14	TC48	TD-40-250	TVA-1511
C2A	▲40	350							
B	■40	350	045-000632			XC3-40			
C	◆40	200				QT1-15			
D	10	50							

FIXED CAPACITORS

ITEM No.	RATING	REMARKS	REPLACEMENT DATA AEROVOX PART No.	CENTRALAB PART No.	CORNELL-DUBILIER PART No.	ELMENCO PART No.	MALLORY PART No.	SPRAGUE PART No.
C3	24 2%				22R5Q24	CM-15E-240G	MCE220	
C4	5 N750			DTN-5	C10V5U	CCTN-050	CN7-550	10TCU-V50

PARTS LIST AND DESCRIPTIONS (Continued)

FIXED CAPACITORS (cont)

ITEM No.	RATING	REMARKS	REPLACEMENT DATA					
			AEROVOX PART No.	CENTRALAB PART No.	CORNELL-DUBILIER PART No.	ELMENCO PART No.	MALLORY PART No.	SPRAGUE PART No.
C5	10 N750			DTN-10	C10Q1U	CCTN-100	CN7-410	10TCU-Q10
C6	.001		BPD-001	DD-102	BYA10D1	CCD-102	B-210	5HK-D10
C7	.001		BPD-001	DD-102	BYA10D1	CCD-102	B-210	5HK-D10
C8	.001		BPD-001	DD-102	BYA10D1	CCD-102	B-210	5HK-D10
C9	10 N750			DTN-10	C10Q1U	CCTN-100	CN7-410	10TCU-Q10
C10	22 2%				22R5Q22	CM-15E-220G		
C11	.01		BPD-01	DD-103	BYA10S1	CCD-103	B-110	5HK-S10
C12	.02		BPD-02	DD-203	BYB6S2	CCD-203	B-120	5HK-S20
C13	.01		BPD-01	DD-103	BYA10S1	CCD-103	B-110	5HK-S10
C14	.001		BPD-001	DD-102	BYA10D1	CCD-102	B-210	5HK-D10
C15	.01		BPD-01	DD-103	BYA10S1	CCD-103	B-110	5HK-S10
C16	.01		BPD-01	DD-103	BYA10S1	CCD-103	B-110	5HK-S10
C17	.01		BPD-01	DD-103	BYA10S1	CCD-103	B-110	5HK-S10
C18	.001		BPD-001	DD-102	BYA10D1	CCD-102	B-210	5HK-D10
C19	.01		BPD-01	DD-103	BYA10S1	CCD-103	B-110	5HK-S10
C20	.005		BPD-005	DD-502	BYA10D5	CCD-502	B-250	5HK-D50
C21	.01		BPD-01	DD-103	BYA10S1	CCD-103	B-110	5HK-S10
C22	100 N750			DTN-100	C10T1U	CCTN-101	CN7-310	10TCU-T10
C23	100 N750			DTN-100	C10T1U	CCTN-101	CN7-310	10TCU-T10
C24	.1 200V		P288N-1	DF-104	CUB2P1	2DP-3-104	GEM-201	2TM-P10
C25	200 N750			DTN-200	C10T2U	CCTN-202	CN7-320	10TCU-T20
C26	.001		BPD-001	DD-102	BYA10D1	CCD-102	B-210	5HK-D10
C27	.01	(.001) †	BPD-01	DD-103	BYA10S1	CCD-103	B-110	5HK-S10
C28	.001		BPD-001	DD-102	BYA10D1	CCD-102	B-210	5HK-D10
C29	100 N750			DTN-100	C10T1U	CCTN-101	CN7-310	10TCU-T10
C30	.001 600V		P688N-001	DD-102	CUB6D1	6DP-1-102	GEM-621	6TM-D10
C31	.0033 600V		P688N-0033	DD-332	CUB6D33	6DP-1-332	GEM-6233	6TM-D33
C32	.001		BPD-001	DD-102	BYA10D1	CCD-102	B-210	5HK-D10
C33	200 N750			DTN-200	C10T2U	CCTN-202	CN7-320	10TCU-T20
C34	.1 400V		P488N-1	DF-104	CUB4P1	4DP-3-104	GEM-401	4TM-P10
C35	.0022 600V		P688N-0022	DD-222	CUB6D22	6DP-1-222	GEM-6222	6TM-D22
C36	17 2%				22R5Q18	CM-15E-180G		
C37	12 2%				22R5Q12	CM-15E-120G		
C38	.001		BPD-001	DD-102	BYA10D1	CCD-102	B-210	5HK-D10
C39	.001		BPD-001	DD-102	BYA10D1	CCD-102	B-210	5HK-D10
C40	47 2%				22R5Q47	CM-15E-470G		
C41	40 2%				22R5Q4	CM-15E-390G	MCE223	
C42	.001		BPD-001	DD-102	BYA10D1	CCD-102	B-210	5HK-D10
C43	.001		BPD-001	DD-102	BYA10D1	CCD-102	B-210	5HK-D10
C44	.001		BPD-001	DD-102	BYA10D1	CCD-102	B-210	5HK-D10
C45	.001		BPD-001	DD-102	BYA10D1	CCD-102	B-210	5HK-D10
C46	5 N750			DTN-5	C10V5U	CCTN-050	CN7-550	10TCU-V50
C47	.022 200V		P288N-022	DD-203	CUB4S22	4DP-2-223	GEM-4122	2TM-S22
C48	.1 200V		P288N-1	DF-104	CUB2P1	2DP-1-104	GEM-201	2TM-P10
C49	.1 400V		P488N-1	DF-104	CUB4P1	4DP-3-104	GEM-401	4TM-P10
C50	.22 600V		P688N-22		CUB6P22	6DP-5-224	GEM-6022	6TM-P22
C51	.0033 1400V		DAC-6	DD16-302	HVE16D3		UAC-233	BL-D30
C52	.0033 1400V		DAC-6	DD16-302	HVE16D3		UAC-233	BL-D30
C53	.01 1400V		DAC-27	DD16-103	HVE16S1		UAC-110	BL-S10
C54	.02		BPD-02	DD-203	BYB6S2	CCD-203	B-120	5HK-S20
C55	.01		BPD-01	DD-103	BYA10S1	CCD-103	B-110	5HK-S10
C56	.1 50V			DDA-104	H-05P1		TA-010	TG-P10
C57	.01		BPD-01	DD-103	BYA10S1	CCD-103	B-110	5HK-S10
C58	.02		BPD-02	DD-203	BYB6S2	CCD-203	B-120	5HK-S20
C59	.01		BPD-01	DD-103	BYA10S1	CCD-103	B-110	5HK-S10

† Alternate Value

CONTROLS

All wattages 1/2 watt, or less, unless otherwise listed.

ITEM No.	USE	RESISTANCE	REPLACEMENT DATA				
			Hallicrafters PART No.	CENTRALAB PART No.	CLAROSTAT PART No.	CTS-IRC PART No.	MALLORY PART No.
R1	Volume & Switch	2meg	025-002048	B-76, KR-1, or (AB-76, KR-1 AK-7)	A47-2meg-Z, FS-3	Q13-139, 76-1, or (BU1, CF27, SS1, GC)*	U56, US-26, or (UA26L, US-41, SL-3500)
R2	Squelch	3meg	025-002047	B-84, or (AB-84, AK-7)	A47-3meg-S, FS-3	Q11-140, or (BU1, CF21, SS1, DC)*	U59, or (UA36L, SL-3500)

* "SNAPTROL"

RESISTORS

All wattages 1/2 watt, or less, unless otherwise listed.

ITEM No.	RATING	REPLACEMENT DATA			ITEM No.	RATING	REPLACEMENT DATA		
		IRC PART No.	WORKMAN PART No.	REMARKS			IRC PART No.	WORKMAN PART No.	REMARKS
R3	150K				R29	8.2meg			
R4	470K				R30	1.8meg			
R5	4700Ω 1W				R31	470K			
R6	27K 1W				R32	470K			
R7	27K				R33	330Ω 1W			
R8	68Ω				R34	10meg			
R9	1000Ω				R35	47K			
R10	47K				R36	2.2meg			
R11	47K				R37	100K			
R12	82K				R38	56K			
R13	47K				R39	27K			
R14	2200Ω				R40	2700Ω			
R15	27K				R41	47K			
R16	68Ω				R42	56K			
R17	1meg				R43	1000Ω			
R18	2200Ω				R44	15K			
R19	47K				R45	27K			
R20	150Ω				R46	56Ω			
R21	47K				R47	8200Ω 5% 1W			
R22	2.2meg				R48	1000Ω 2W			
R23	470K				R49	33Ω 1W			
R24	1meg				R50	1meg			
R25	220K				R51	560K			
R26	220K				R52	10Ω			
R27	2.2meg				R53	470K			
R28	1.5meg				R54	22Ω 5W		5W-SQ-22.5	

PARTS LIST AND DESCRIPTIONS (Continued)

COILS (RF-IF)

ITEM No.	USE	REPLACEMENT DATA					NOTES
		Hallicrafters PART No.	Merit PART No.	Miller PART No.	Stancor PART No.	Workman PART No.	
L1	RF	051-002791					
L2	Receiver Osc.	051-003319					
L3	RF (27uh)	053-000647		72F275AP			
L4	1st IF	050-000751					
L5	2nd IF	050-000751					
L6	3rd IF	050-000751					
L7	Transmit. Osc.	051-003312					
L8	RF Choke (500uh)	053-000537					
L9	RF Choke (500uh)	053-000537					
L10	RF Choke (500uh)	053-000537					
L11	Final Pri.	051-003324					
L12	Final Sec.	051-002770					
L13	54MC Trap	053-000564					
L14	Hash Suppressor	051-002785					
L15	Hash Filter	051-002740					

TRANSFORMER (POWER)

ITEM No.	RATING			REPLACEMENT DATA					NOTES
	PRI.	SEC. 1	SEC. 2	Hallicrafters PART No.	Merit PART No.	Stancor PART No.	Thordarson PART No.	Triad PART No.	
T1	117VAC @ .53A or 12.6VDC @ 4.3A	110VAC @ .30A	12.6V @ 1.6A	052-000744					

TRANSFORMER (AUDIO OUTPUT)

ITEM No.	IMPEDANCE		REPLACEMENT DATA					NOTES
	PRI.	SEC.	Hallicrafters PART No.	Merit PART No.	Stancor PART No.	Thordarson PART No.	Triad PART No.	
T2	18K	3-4Ω	055-000433					

SPEAKER

ITEM No.	TYPE			REPLACEMENT DATA		NOTES
	SIZE	FIELD	V. C. IMP.	Hallicrafters PART No.	QUAM PART No.	
SP1	4"	PM	3-4Ω	085-000206	4A07	

VIBRATOR

ITEM No.	TYPE	INPUT VOLTS	FRE-QUENCY	REPLACEMENT DATA				NOTES
				Hallicrafters PART No.	CORNELL-DUBILIER PART No.	MALLORY PART No.	RADIART PART No.	
M1	Interruptor	12V	115~	027-000282	G8801	G1601	G8801	

FUSES

ITEM No.	TYPE	RATING	REPLACEMENT DATA					
			Hallicrafters PART No.		LITTELFUSE PART No.		BUSS PART No.	
			FUSE	HOLDER	FUSE	HOLDER	FUSE	HOLDER
M2	3AG	5A 32V	039-100322	006-000883	311005. (3AG 5A 32V)	155020	AGC 5	HHJ-B

MISCELLANEOUS

ITEM No.	PART NAME	Hallicrafters PART No.	NOTES
M3	Crystal	019-002819	Receive — When ordering crystals specify desired channel,
M4	Crystal	019-002820	Transmit — model, and serial number.
M5	Switch	062-000194	Receive
M6	Switch	062-000193	Transmit
M7	Relay	021-000511	Receive-Transmit (DPDT, 12VAC Coil)
	Microphone	081-000111	
	RF Indicator Lamp	039-000680	

CABINETS & CABINET PARTS

(When Ordering Cabinets & Cabinet Parts, Specify Model, Chassis & Color)

NAME	PART NO.	DESCRIPTION
Dial Scale	083-000943	
Knob	015-001680	Volume
Knob	015-001678	Squelch
Knob	015-001683	Channel Selector
Cabinet	150-003385	

WIRING DATA

General-use Hook-up Wire .... Use BELDEN No. 8530 (Solid) Available in 12 Colors
8524 (Stranded) Available in 12 Colors
Shielded Antenna Lead ..... Use BELDEN No. 8214 Lowest Loss (RG-8/U Type)
8237 Low Loss (RG-8/U)
8240 (Solid) Miniature (RG-58/U)
8259 (Stranded) Miniature (RG-58A/U)
Coiled Microphone Cable ..... Use BELDEN No. 8497 3 Conductor- 1 Shielded for Press-to-Talk (Neoprene)
8496 3 Conductor- 1 Shielded for Press-to-Talk (Vinyl)
Ignition Noise Suppression .... Use BELDEN No. 7300-Series Spark-Plug Sets
Bonding Strap ..... Use BELDEN No. 8661 (3/8 in.)

PHOTOFACT® Folder with CIRCUITRACE®

HALLICRAFTERS MODEL LITTLEFONE CB-4

NOTICE

ONLY THOSE PERSONS PROPERLY LICENSED ARE PERMITTED TO MAKE REPAIRS OR ADJUSTMENTS WHICH MAY RESULT IN ILLEGAL OPERATION. (REFER TO FCC RULES & REGULATIONS PART 19, SUBPART D, SECTION 19.71.)

TRADE NAME	Hallicrafters Model Littlefone CB-4
MANUFACTURER	The Hallicrafters Co., 4400 W. 45th Street, Chicago 32, Illinois
TYPE SET	Battery Operated 7 Transistor Portable Citizens Band Transmitter-Receiver
POWER SUPPLY	12 Volts DC RATING 13 MA @ 12 Volts DC (Receive, No Signal) 23 MA @ 12 Volts DC (Transmit, No Modulation)
TUNING RANGE	Any One of Citizens Band Channels 2 thru 23

ALIGNMENT INSTRUCTIONS

ALIGNMENT INSTRUCTIONS—READ CAREFULLY BEFORE ATTEMPTING ALIGNMENT

Use only enough generator output to provide a usable indication.

Suggested Alignment Tools:

A1, A2, A3.....GENERAL CEMENT #8282, 8606, 8606-L, 9091
WALSCO #2526, 2541, 2542, 2543, 2544

A4, A5, A6.....GENERAL CEMENT #8282, 8606, 8606-L, 9295, 9440
WALSCO #2526, 2543, 2544, 2545

RECEIVER ALIGNMENT

	SIGNAL GENERATOR COUPLING	SIGNAL GENERATOR FREQUENCY	CHANNEL	CONNECT VTVM	ADJUST	REMARKS
1.	Fashion loop of several turns of wire and radiate signal into loop of receiver.	455KC (Unmod.)	Channel 11 (27.085MC)	Across Volume Control	A1, A2, A3	Adjust for maximum deflection.
2.	"	Channel Freq.	Highest Channel Used	"	A4	Adjust for maximum deflection. Rock A4 to each side of peak. Note rate of dropoff. Set A4 just below peak on side of gradual dropoff.
3.	"	"	Center Freq.	"	A5	Adjust for maximum deflection.

TRANSMITTER ALIGNMENT

ONLY THOSE PERSONS PROPERLY LICENSED ARE PERMITTED TO MAKE REPAIRS OR ADJUSTMENTS WHICH MAY RESULT IN ILLEGAL OPERATION. (REFER TO FCC RULES & REGULATIONS PART 19, SUBPART D, SECTION 19.71)

	SPECIAL INSTRUCTIONS	INDICATOR	ADJUST	REMARKS
4.	Connect dummy load, RF wattmeter or antenna.	DC milliammeter in series with supply voltage.	A6	Set supply voltage for 12V DC. Key transmitter and adjust A6 for 22MA.

HOWARD W. SAMS & CO., INC. Indianapolis 6, Indiana

HALLICRAFTERS MODEL LITTLEFONE CB-4

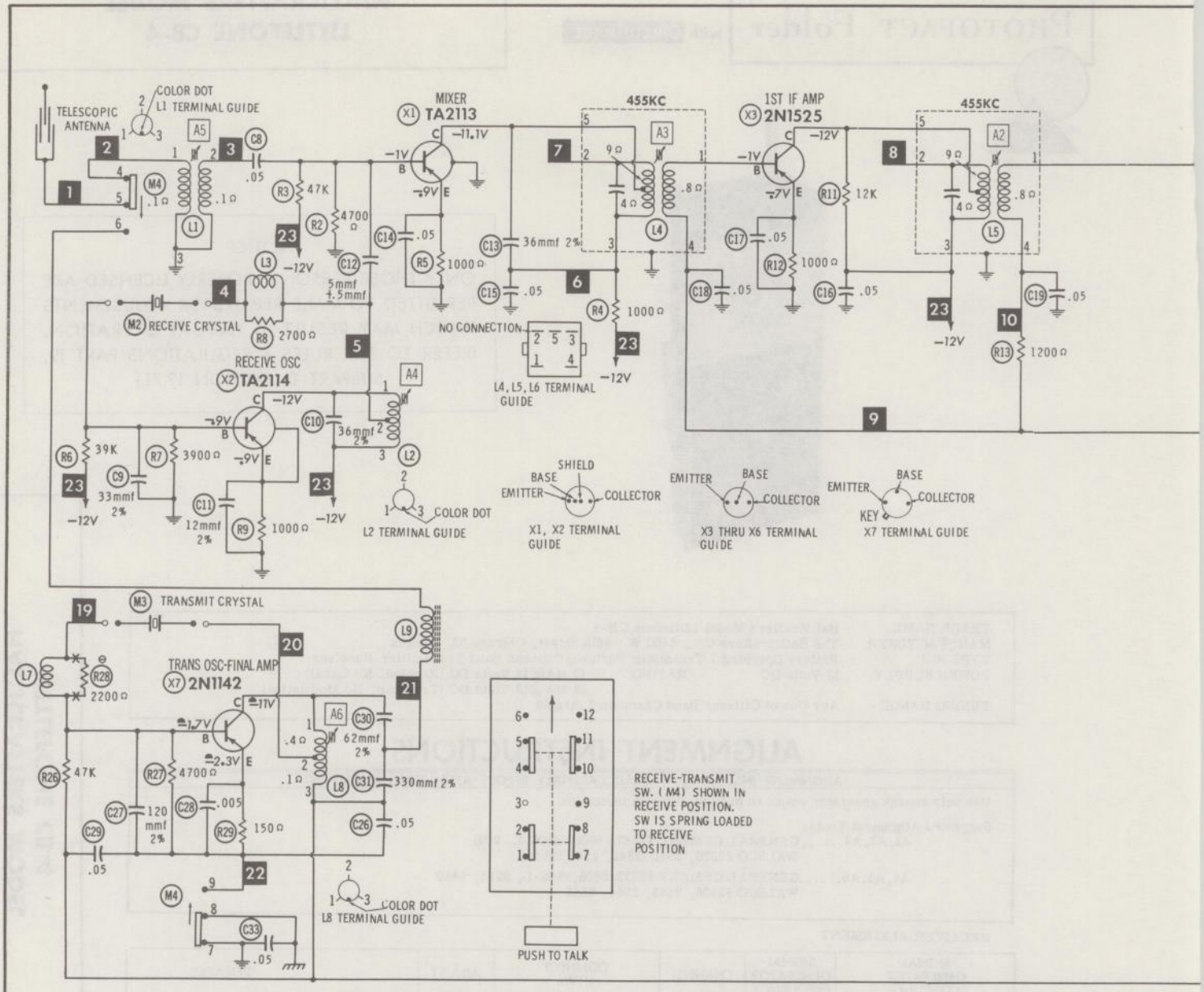

NUMBERS ASSIGNED TO COILS, SWITCHES, PLUGS, SOCKETS, AND TRANSFORMERS ARE TO FACILITATE CIRCUIT TRACING OR COMPONENT REPLACEMENT AND MAY NOT NECESSARILY BE FOUND ON THE UNIT.

⊖ SEE PARTS LIST FOR ALTERNATE VALUE OR APPLICATION

1. DC voltage measurements taken with vacuum tube voltmeter.
2. Socket connections or transistor terminals are shown as bottom views.
3. Measured values are from socket pin or terminal to common ground.
4. Nominal tolerance on component values makes possible a variation of ±15% in voltage and resistance readings.
5. Volume control at maximum, no signal applied for voltage measurements.

RESISTANCE READINGS

ITEM	TYPE	BASE	EMITTER	COLLECTOR
X1	TA2113	†4700Ω	1000Ω	†1000Ω
X2	TA2114	†3900Ω	1000Ω	†0Ω
X3	2N1525	11K	1000Ω	†4Ω
X4	2N1525	12K	560Ω	†1000Ω
X5	2N405	†3900Ω	470Ω	†5600Ω
X6	2N270	†3300Ω	100Ω	†30Ω
X7	2N1142	▪4700Ω	▪150Ω	†30Ω

ALL MEASUREMENTS TAKEN IN "RECEIVE" POSITION UNLESS OTHERWISE DESIGNATED.
▪ TAKEN IN "TRANSMIT" POSITION.
† MEASURED FROM JUNCTION OF C7 AND SWITCH.
TRANSISTORS REMOVED FOR RESISTANCE MEASUREMENTS.

A PHOTOFACT STANDARD NOTATION SCHEMATIC with CIRCUITRACE™

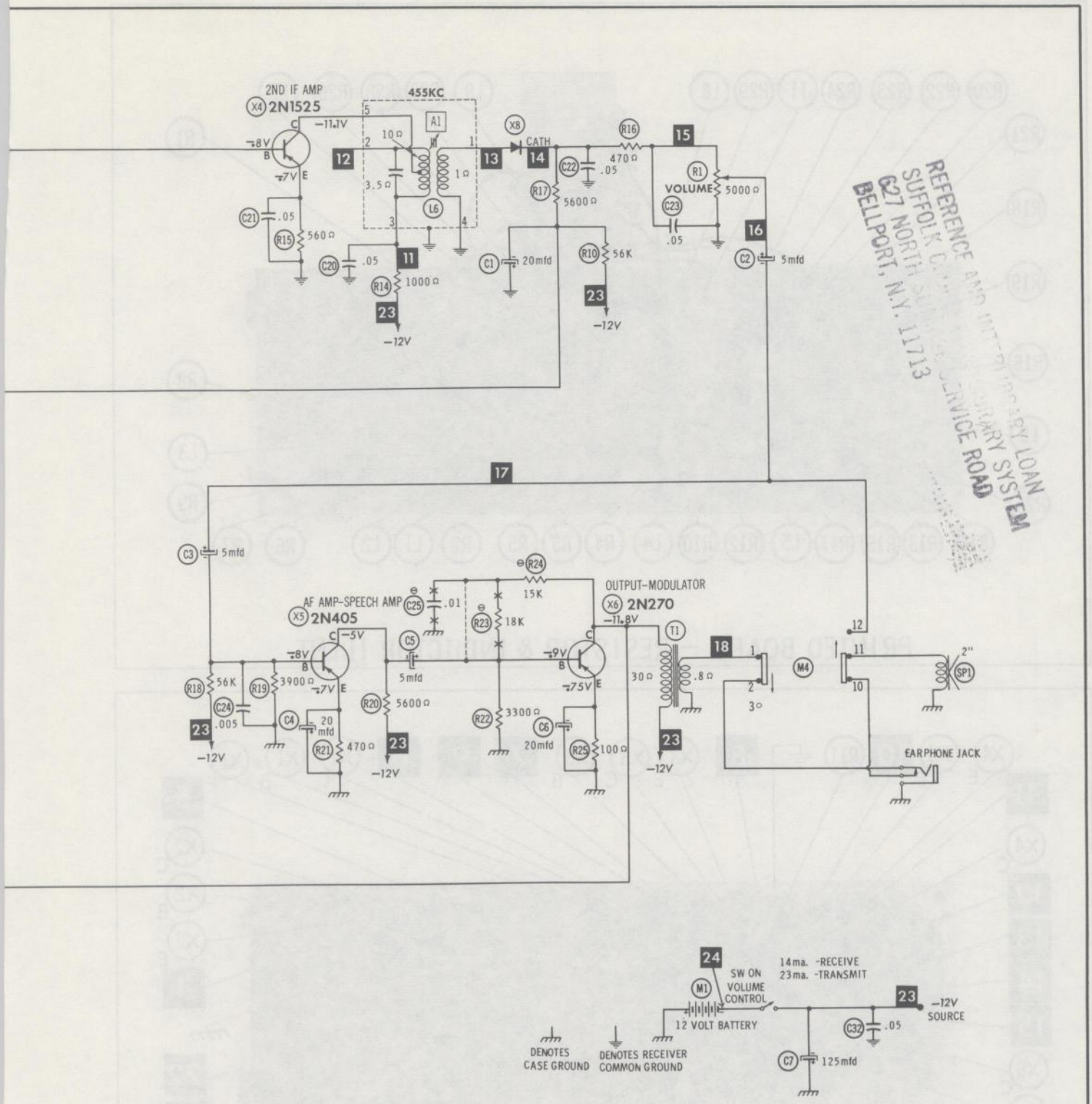

HALLICRAFTERS MODEL LITTLEFONE CB-4

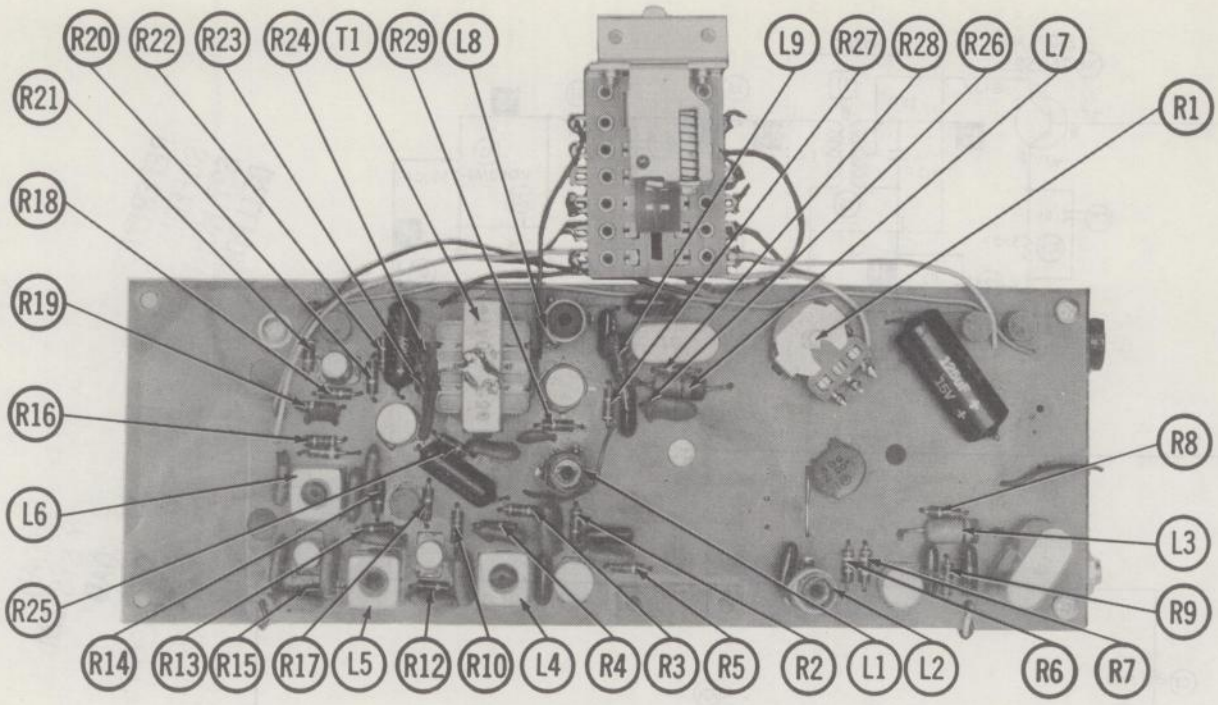

PRINTED BOARD – RESISTOR & INDUCTOR IDENT.

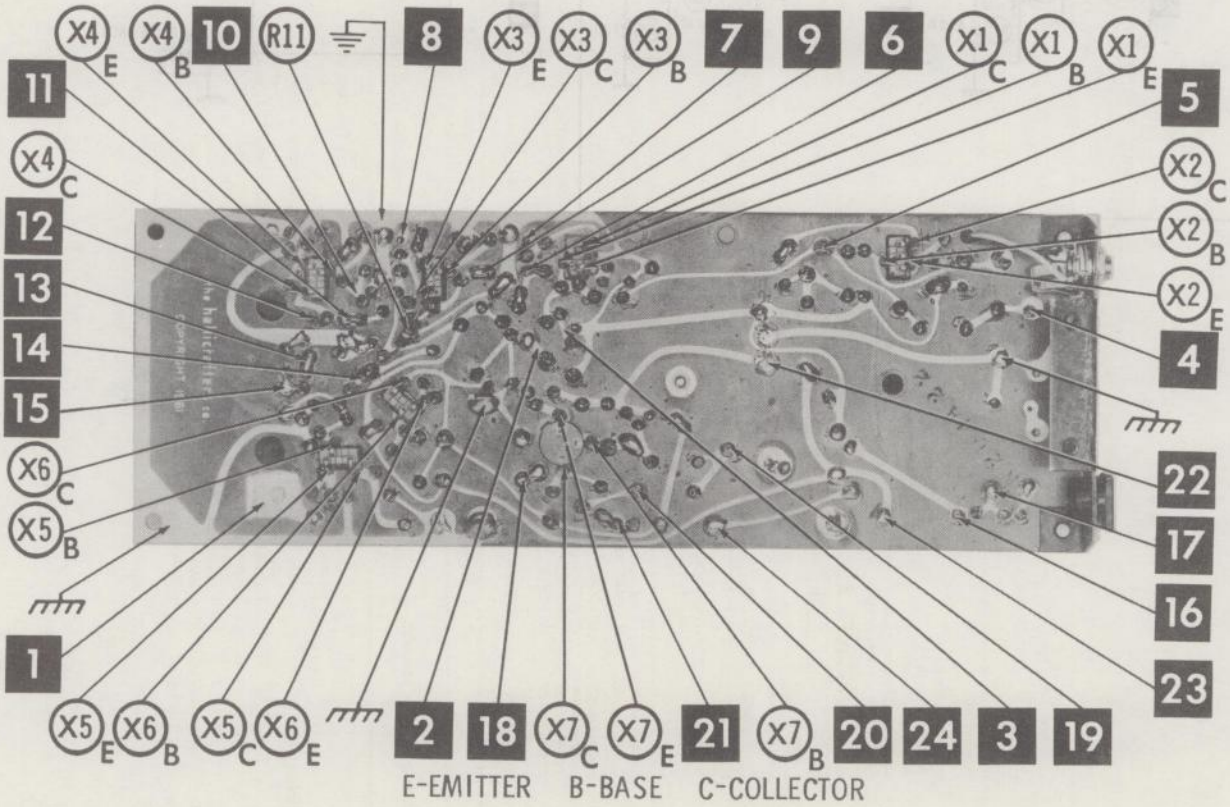

A Howard W. Sams CIRCUITRACE® Photo

PRINTED BOARD – BOTTOM VIEW

PARTS LIST AND DESCRIPTIONS

TRANSISTORS

ITEM No.	ORIG. TYPE	USE	REPLACEMENT DATA: GENERAL ELECTRIC PART No.	REPLACEMENT DATA: RCA PART No.	REPLACEMENT DATA: RAYTHEON PART No.	NOTES
X1	TA2113	Receive Mixer	GE-1		2N486	PNP
X2	TA2114	Receive Oscillator	GE-1		2N481	PNP
X3	2N1525	1st IF Amplifier	GE-1		2N484	PNP
X4	2N1525	2nd IF Amplifier	GE-1		2N484	PNP
X5	2N405	AF Amp. -Speech Amp.	GE-2	2N406	2N362	PNP
X6	2N270	Output-Modulator	GE-2	2N270	2N631	PNP
X7	2N1142	Trans. Osc. -Final Amp.	GE-1			PNP

POWER RECTIFIERS & SIGNAL DIODES

ITEM No.	CURRENT RATING (Measured)	ORIGINAL Part or Type No.	RECTIFIERS: RCA PART No.	RECTIFIERS: SARKES TARZIAN PART No.	DIODES: RAYTHEON PART No.	NOTES
X8		019-301980			1N295	Detector (1N295)

ELECTROLYTIC CAPACITORS

ITEM No.	RATING: CAP.	RATING: VOLT.	REPLACEMENT DATA: Hallicrafters PART No.	AEROVOX PART No.	CORNELL-DUBILIER PART No.	GENERAL ELECTRIC PART No.	MALLORY PART No.	PYRAMID PART No.	SPRAGUE PART No.
C1	20	10	045-000855	PTT41	ECPB410	MT1-10	TT15X20	MLV20-12	VL-1129
C2	5	10	045-000854	PTT37	ECPB405	MT1-3	TT12X5	MLV5-12	VL-1124
C3	5	10	045-000854	PTT37	ECPB405	MT1-3	TT12X5	MLV5-12	VL-1124
C4	20	10	045-000855	PTT41	ECPB410	MT1-10	TT15X20	MLV20-12	VL-1129
C5	5	10	045-000857	PTT37	NLW5-15	MT1-3	TT12X5	MLV5-12	TE-1127
C6	20	6	045-000861	BCD6020	NLW20-15	MT1-13	TT15X20	MLV20-12	TE-1090
C7	125	15	045-000856		NLW125-15	MT1-23	TT15X150		TE-1163

FIXED CAPACITORS

ITEM No.	RATING	REMARKS	REPLACEMENT DATA: AEROVOX PART No.	CENTRALAB PART No.	CORNELL-DUBILIER PART No.	ELMENCO PART No.	MALLORY PART No.	SPRAGUE PART No.
C8	.05		C80V503AM	DDA-503	H-05S5		TA-150	TG-S50
C9	33 2%		1469-33	DTZ-33	22R5Q33	CM-15E-330G		MS-433
C10	36 2%		1469-36		22R5Q36	CM-15E-360G		MS-436
C11	12 2%		1469-12		22R5Q12	CM-15C-120J		MS-412
C12	5 +.5mmf		1469-5		22R5V5	CM-15C-050J	MCB250	MS-55
C13	36 2%		1469-36		22R5Q36	CM-15E-360G		MS-436
C14	.05		C80V503AM	DDA-503	H-05S5		TA-150	TG-S50
C15	.05		C80V503AM	DDA-503	H-05S5		TA-150	TG-S50
C16	.05		C80V503AM	DDA-503	H-05S5		TA-150	TG-S50
C17	.05		C80V503AM	DDA-503	H-05S5		TA-150	TG-S50
C18	.05		C80V503AM	DDA-503	H-05S5		TA-150	TG-S50
C19	.05		C80V503AM	DDA-503	H-05S5		TA-150	TG-S50

FIXED CAPACITORS (cont)

ITEM No.	RATING	REMARKS	REPLACEMENT DATA: AEROVOX PART No.	CENTRALAB PART No.	CORNELL-DUBILIER PART No.	ELMENCO PART No.	MALLORY PART No.	SPRAGUE PART No.
C20	.05		C80V503AM	DDA-503	H-05S5		TA-150	TG-S50
C21	.05		C80V503AM	DDA-503	H-05S5		TA-150	TG-S50
C22	.05		C80V503AM	DDA-503	H-05S5		TA-150	TG-S50
C23	.05		C80V503AM	DDA-503	H-05S5		TA-150	TG-S50
C24	.005		C80V502AM	DM-502	H-05D5	CCD-502	TA-250	TG-D50
C25	.01	Note 1	C80V103AM	DM-103	H-05S1	CCD-103	TA-110	TG-S10
C26	.05		C80V503AM	DDA-503	H-05S5		TA-150	TG-S50
C27	120 2%		1469-120	DTZ-120	22R5T12	CM-15E-121G		MS-312
C28	.005		C80V502AM	DM-502	H-05D5	CCD-502	TA-250	TG-D50
C29	.05		C80V503AM	DD-503	H-05S5		TA-150	TG-S50
C30	62 2%		1469-62		22R5Q62	CM-15E-620G		MS-462
C31	330 2%		1469-330		22R5T33	CM-15E-331G		MS-333
C32	.05		C80V503AM	DDA-503	H-05S5		TA-150	TG-S50
C33	.05		C80V503AM	DDA-503	H-05S5		TA-150	TG-S50

Note 1. Not used in some versions.

CONTROLS

All wattages 1/2 watt, or less, unless otherwise listed.

ITEM No.	USE	RESISTANCE	REPLACEMENT DATA: Hallicrafters PART No.	CENTRALAB PART No.	CLAROSTAT PART No.	CTS-IRC PART No.	MALLORY PART No.
R1	Volume & Switch	5000Ω	025-002081				

RESISTORS

All wattages 1/2 watt, or less, unless otherwise listed.

ITEM No.	RATING	REPLACEMENT DATA: IRC PART No.	WORKMAN PART No.	REMARKS
R2	4700Ω			
R3	47K			
R4	1000Ω			
R5	1000Ω			
R6	39K			
R7	3900Ω			
R8	2700Ω			
R9	1000Ω			
R10	56K			
R11	12K			
R12	1000Ω			
R13	1200Ω			
R14	1000Ω			
R15	560Ω			

ITEM No.	RATING	REPLACEMENT DATA: IRC PART No.	WORKMAN PART No.	REMARKS
R16	470Ω			
R17	5600Ω			
R18	56K			
R19	3900Ω			
R20	5600Ω			
R21	470Ω			
R22	3300Ω			
R23	18K			Note 1
R24	15K			Note 1
R25	100Ω			
R26	47K			
R27	4700Ω			
R28	2200Ω			Note 2
R29	150Ω			

Note 1. When R24 is 33K, R23 is not used.
Note 2. Not used in early versions.

PARTS LIST AND DESCRIPTIONS (Continued)

COILS (RF-IF)

ITEM No.	USE	REPLACEMENT DATA					NOTES
		Hallicrafters PART No.	Merit PART No.	Miller PART No.	Stancor PART No.	Workman PART No.	
L1	Ant. Receiver	051-003411					
L2	Osc. Receiver	051-003412					
L3	RF Choke (1uh)	051-000654		4602			
L4	1st IF	050-000805-01					
L5	2nd IF	050-000805-01					
L6	3rd IF	050-000805-02					
L7	RF Choke (1uh)	051-000654		4602			
L8	Osc. Transmitt	051-003410					
L9	Ant. Loading	051-003424					

TRANSFORMER (AUDIO OUTPUT)

ITEM No.	IMPEDANCE		REPLACEMENT DATA					NOTES
	PRI.	SEC.	Hallicrafters PART No.	Merit PART No.	Stancor PART No.	Thordarson PART No.	Triad PART No.	
T1	2000Ω	10-12Ω	055-000470					

SPEAKER

ITEM No.	TYPE			REPLACEMENT DATA		NOTES
	SIZE	FIELD	V. C. IMP.	Hallicrafters PART No.	QUAM PART No.	
SP1	2"	PM	10-12Ω	085-000220		

BATTERIES

ITEM No.	VOLTAGE	Hallicrafters PART No.	REPLACEMENT DATA						NOTES
			BURGESS		EVEREADY		MALLORY		
			"A"	"B"	"A"	"B"	"A"	"B"	
M1	12V					228		TR289	

MISCELLANEOUS

ITEM No.	PART NAME	Hallicrafters PART No.	NOTES
M2	Crystal	019-002887- *	Receive (* Insert Channel Desired)
M3	Crystal	019-002820- *	Transmit (* Insert Channel Desired)
M4	Switch	060-002462	Receive-Transmit (4 PDT Spring Loaded, Slide Type)
	Antenna	057-000421	Telescoping

CABINETS & CABINET PARTS

(When Ordering Cabinets & Cabinet Parts, Specify Model, Chassis & Color)

NAME	PART NO.	DESCRIPTION
Bar	073-004352	"Push-to-Talk"
Knob	015-001750	
Cover Assembly	150-004819	
Case	150-004193	Riveting Assembly

WIRING DATA

General-use Hook-up Wire .... Use BELDEN No. 8530 (Solid) Available in 12 Colors
8524 (Stranded) Available in 12 Colors)
Shielded Antenna Lead ..... Use BELDEN No. 8214 Lowest Loss (RG-8/U Type)
8237 Low Loss (RG-8/U)
8240 (Solid) Miniature (RG-58/U)
8259 (Stranded) Miniature (RG-58A/U)
Coiled Microphone Cable ..... Use BELDEN No. 8499 Single Conductor Shielded (Neoprene)
8498 Single Conductor Shielded (Vinyl)
Ignition Noise Suppression .... Use BELDEN No. 7300-Series Spark-Plug Sets
Bonding Strap ..... Use BELDEN No. 8661 (3/8 In.)

PRINTED BOARD—TOP VIEW

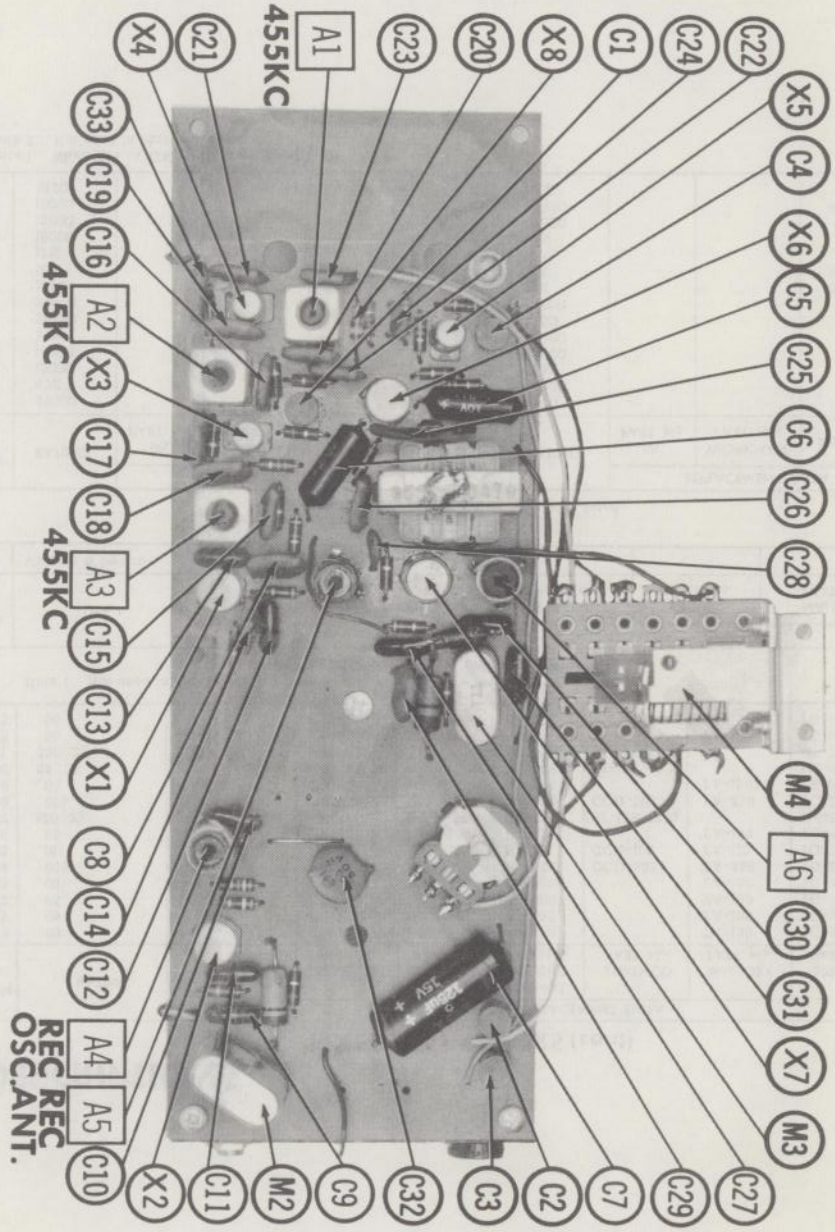

PHOTOFACT® Folder

HEATH MODELS GW-10A/D, GWW-10A/D

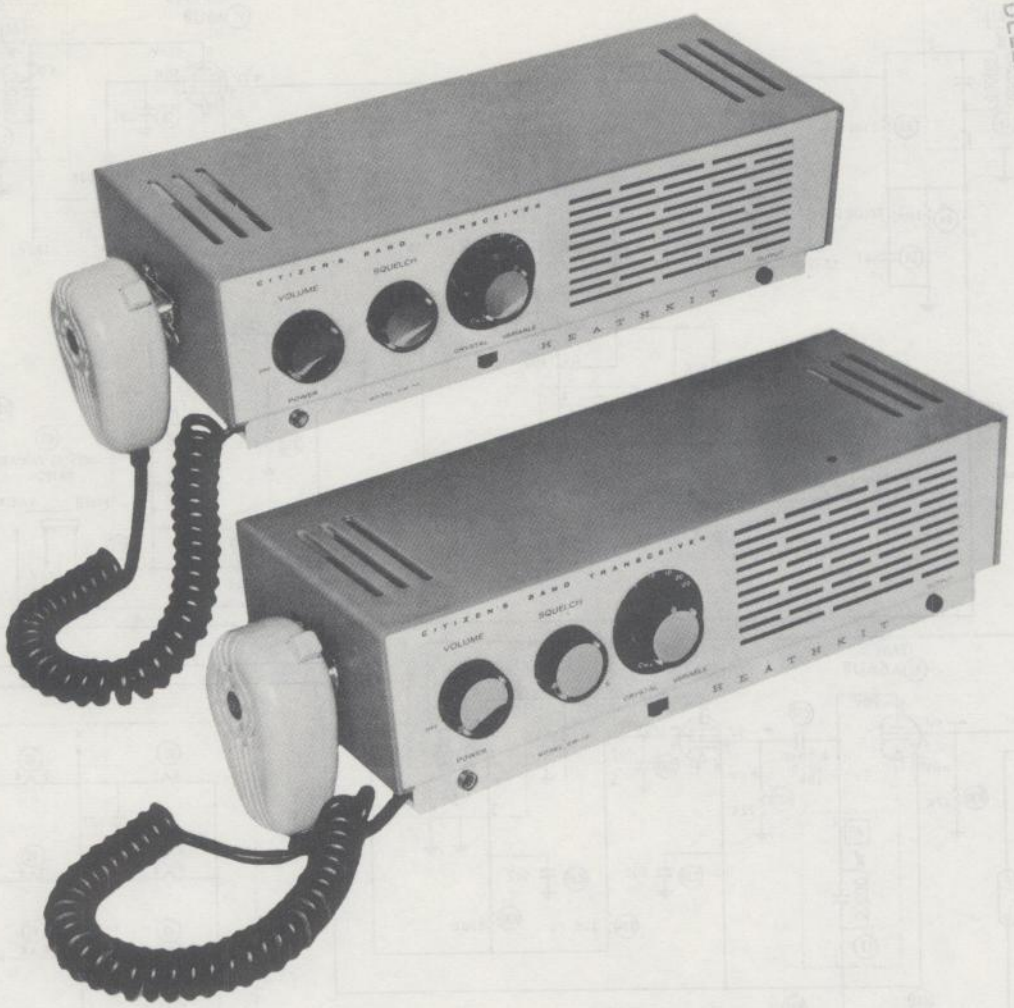

HEATH MODELS
GW-10A/D, GWW-10A/D

TRADE NAME	Heath Models GW-10A, GW-10D, GWW-10A, GWW-10D
MANUFACTURER	Heath Co., A Subsidiary of Daystrom, Inc., Benton Harbor, Michigan
TYPE SET	AC (or) Battery Operated 7 Tube Citizens Band Transmitter-Receiver
POWER SUPPLY	Models GW-10A, GWW-10A: 110-120 Volts AC, 60 Cycles GW-10D, GWW-10D: 6 (or) 12 Volt Storage Battery
RATING	Models GW-10A, GWW-10A: 38 Watts, .39 Amp. @117 Volts AC (Receive); 44 Watts, .44 Amp. @ 117 Volts AC (Transmit) GW-10D, GWW-10D: 3.2 Amp. @12.6 Volts DC (Receive); 3.8 Amp. @12.6 Volts DC (Transmit) or 6.4Amp. @6.3 Volts DC (Receive); 7.6 Amp. @6.3 Volts DC (Transmit)
TUNING RANGE	TRANSMITTER: Any 3 of Citizens Band Channels 1 thru 23 RECEIVER: Crystal Controlled on any one of Citizens Band Channels 1 thru 23 or Manually Tuneable

NOTICE

ONLY THOSE PERSONS PROPERLY LICENSED ARE PERMITTED TO MAKE ADJUSTMENTS OR REPAIRS WHICH MAY RESULT IN ILLEGAL OPERATION. (REFER TO FCC RULES & REGULATIONS PART 19, SUBPART D, SECTION 19.71).

HOWARD W. SAMS & CO., INC. Indianapolis 6, Indiana

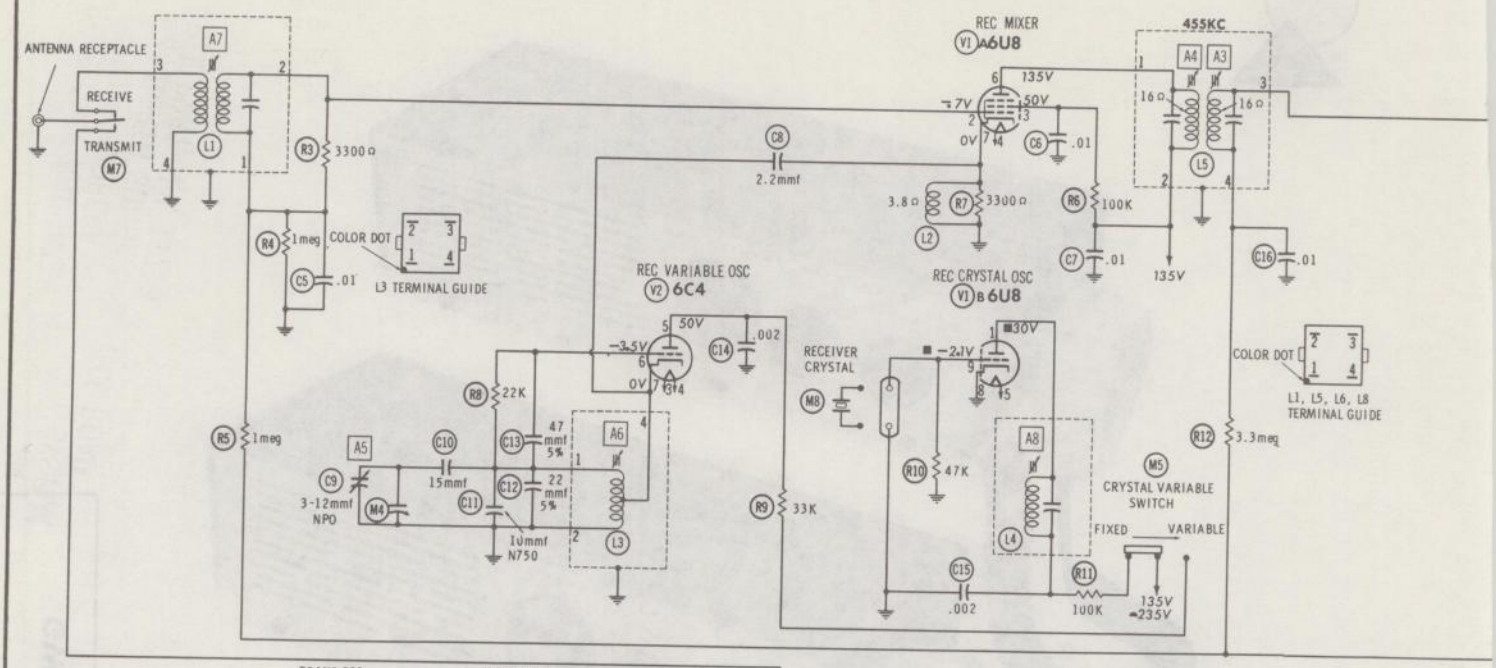

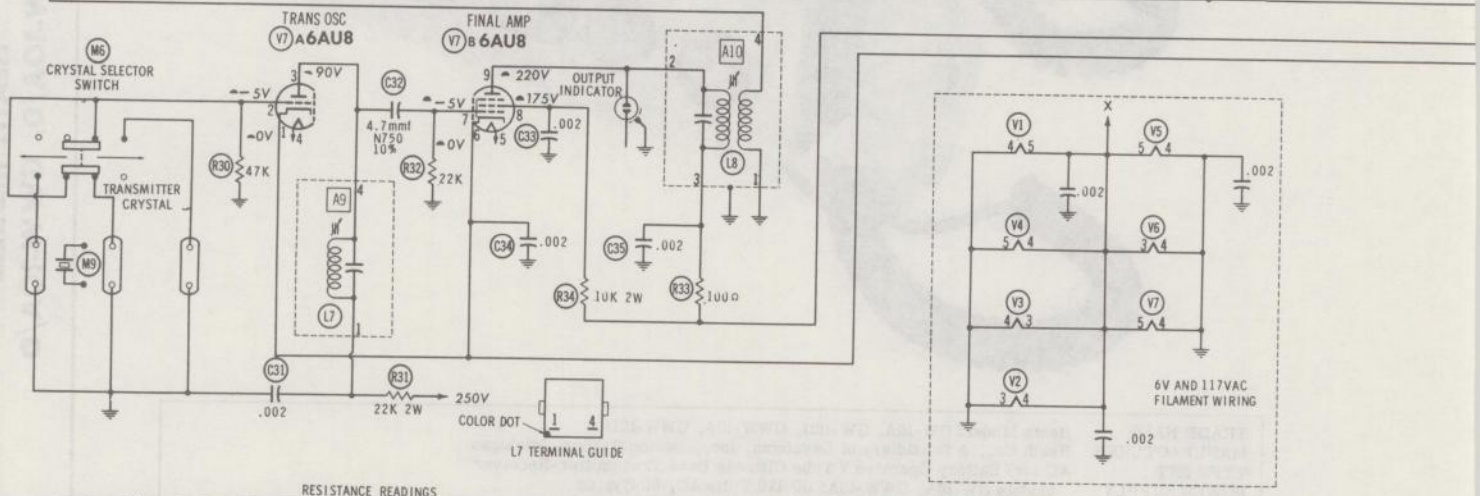

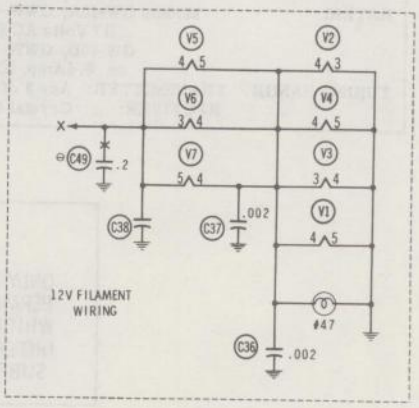

RESISTANCE READINGS

ITEM	TUBE	Pin 1	Pin 2	Pin 3	Pin 4	Pin 5	Pin 6	Pin 7	Pin 8	Pin 9
V1	6U8	■†110K	700K	†110K	FIL	FIL	†10K	.1Ω	0Ω	47K
V2	6C4	NC	NC	FIL	FIL	†43K	22K	.1Ω		
V3	6BJ6	4meg	0Ω	FIL	FIL	†10K	†66K	0Ω		
V4	6BJ7	0Ω	650K	0Ω	FIL	FIL	630K	2.3meg	†540K	630K
V5	6AN8	▲†480K	10meg	0Ω	FIL	FIL	†330K	†1.5meg	270K	1500Ω
V6	6AQ5A	270K	470Ω	FIL	FIL	†810Ω	†330Ω	270K		
V7	6AU8	▲0Ω	▲47K	†22K	FIL	FIL	▲0Ω	22K	†10K	†860Ω

ALL MEASUREMENTS MADE IN "RECEIVE", VARIABLE POSITION UNLESS OTHERWISE DESIGNATED.
▲ MEASURED IN "TRANSMIT" POSITION.
■ MEASURED IN "FIXED" POSITION.
† MEASURED FROM OUTPUT OF X1.
NC NO CONNECTION

⊖ SEE PARTS LIST FOR ALTERNATE VALUE OR APPLICATION

DC COIL RESISTANCE VALUES UNDER ONE OHM NOT SHOWN ON SCHEMATIC DIAGRAM

1. DC voltage measurements taken with vacuum tube voltmeter; AC voltages measured with 1000 ohm per volt voltmeter.
2. Socket connections are shown as bottom views.
3. Measured values are from socket pin to common ground.
4. Line voltage maintained at 117 volts for voltage readings.
5. Nominal tolerance of component values makes possible a variation of ±15% in voltage and resistance readings.
6. All controls at minimum, proper output load connected.

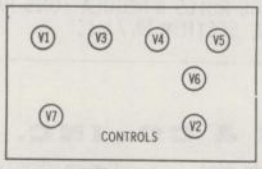

TUBE LAYOUT (BOTTOM VIEW)

A PHOTOFACT STANDARD NOTATION SCHEMATIC

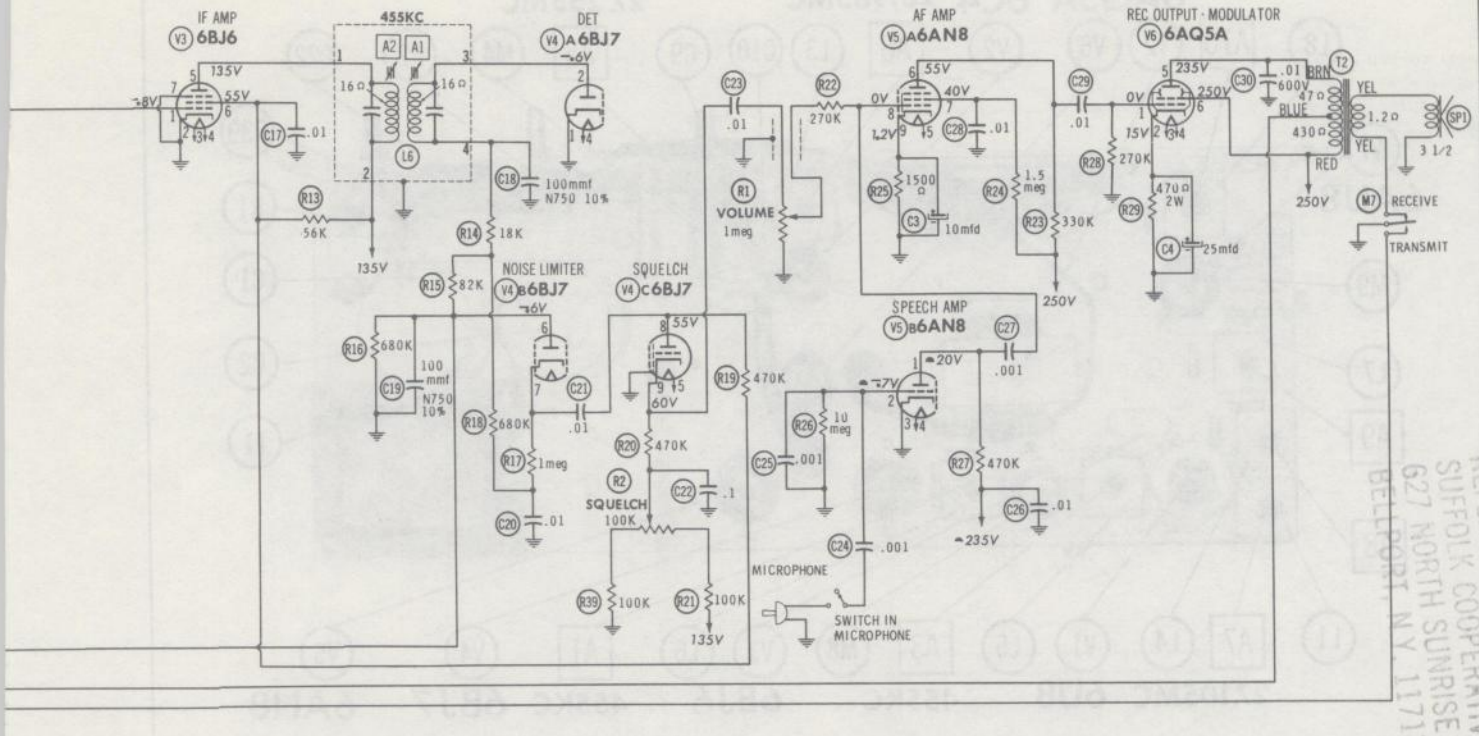

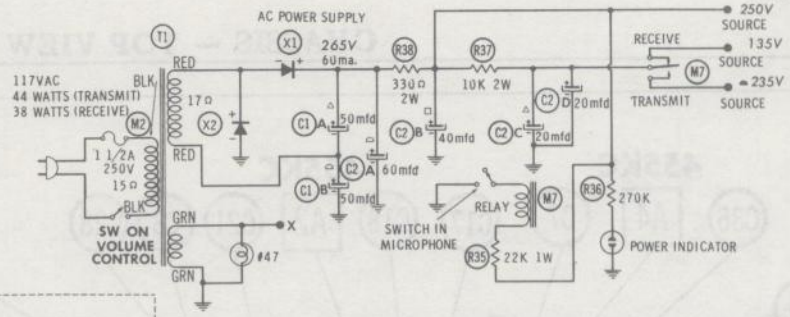

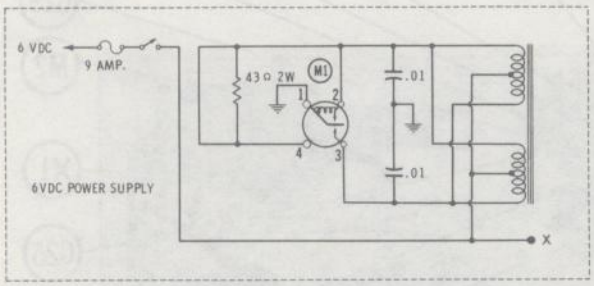

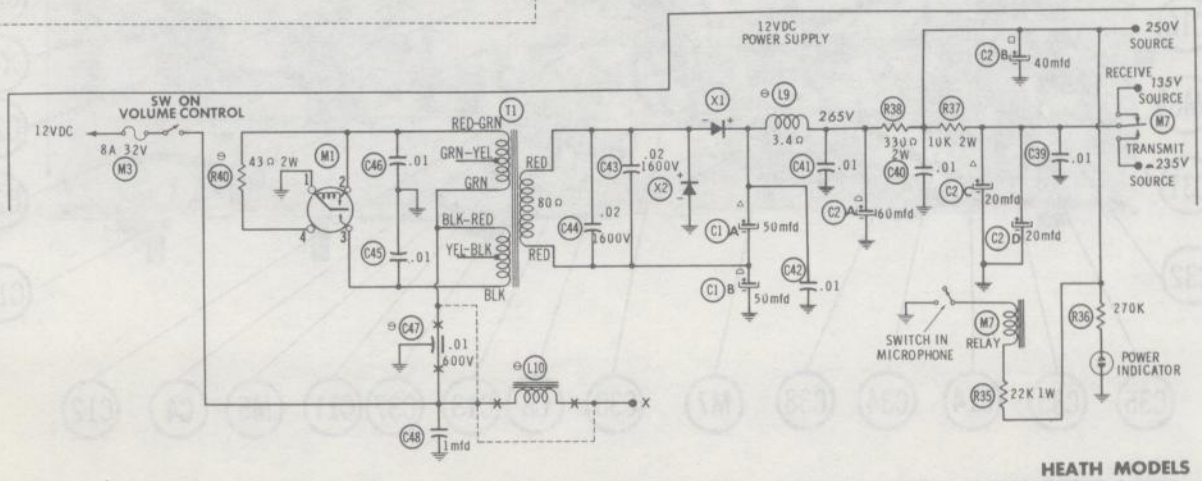

HEATH MODELS
GW-10A/D, GWW-10A/D

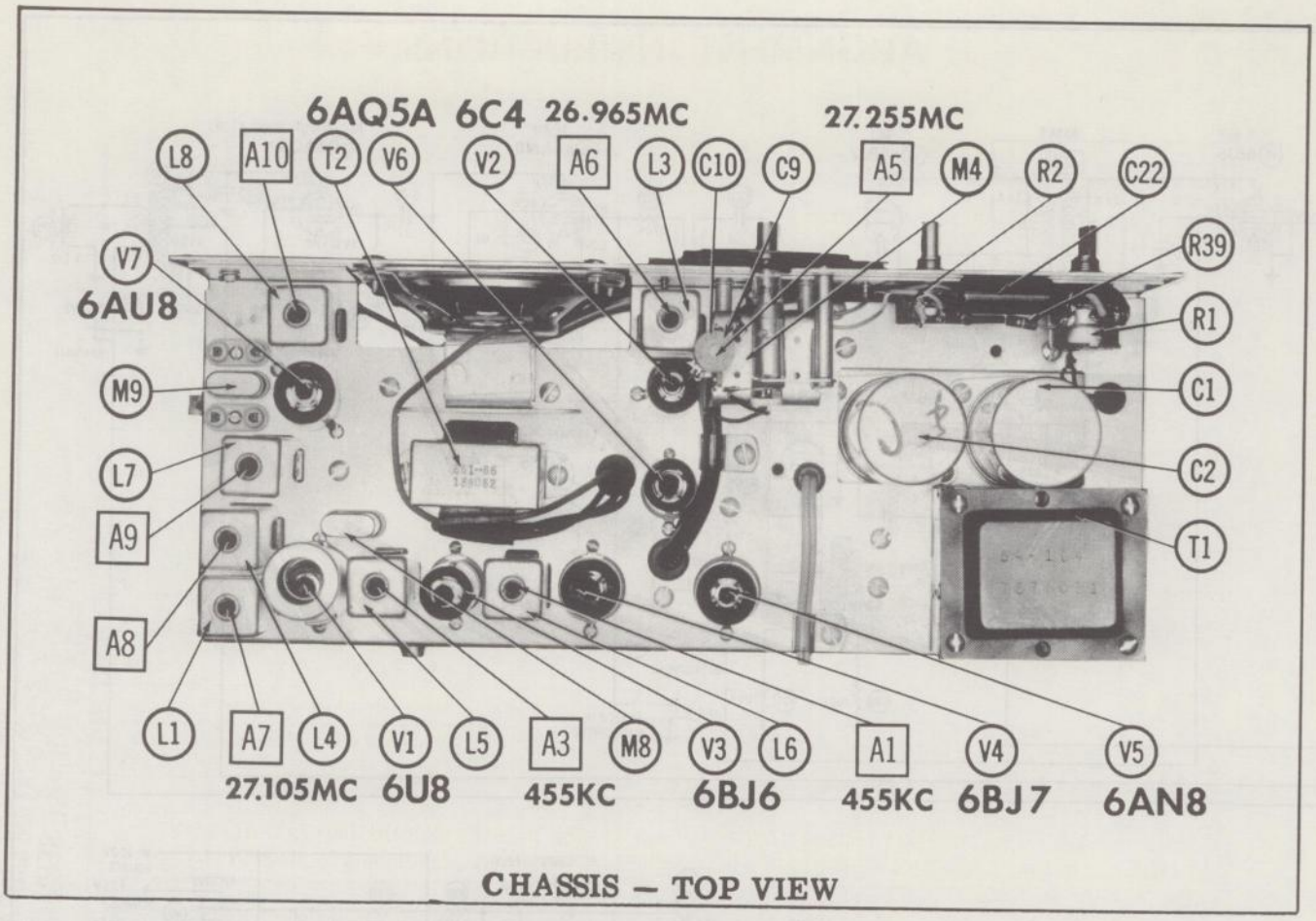

CHASSIS — TOP VIEW

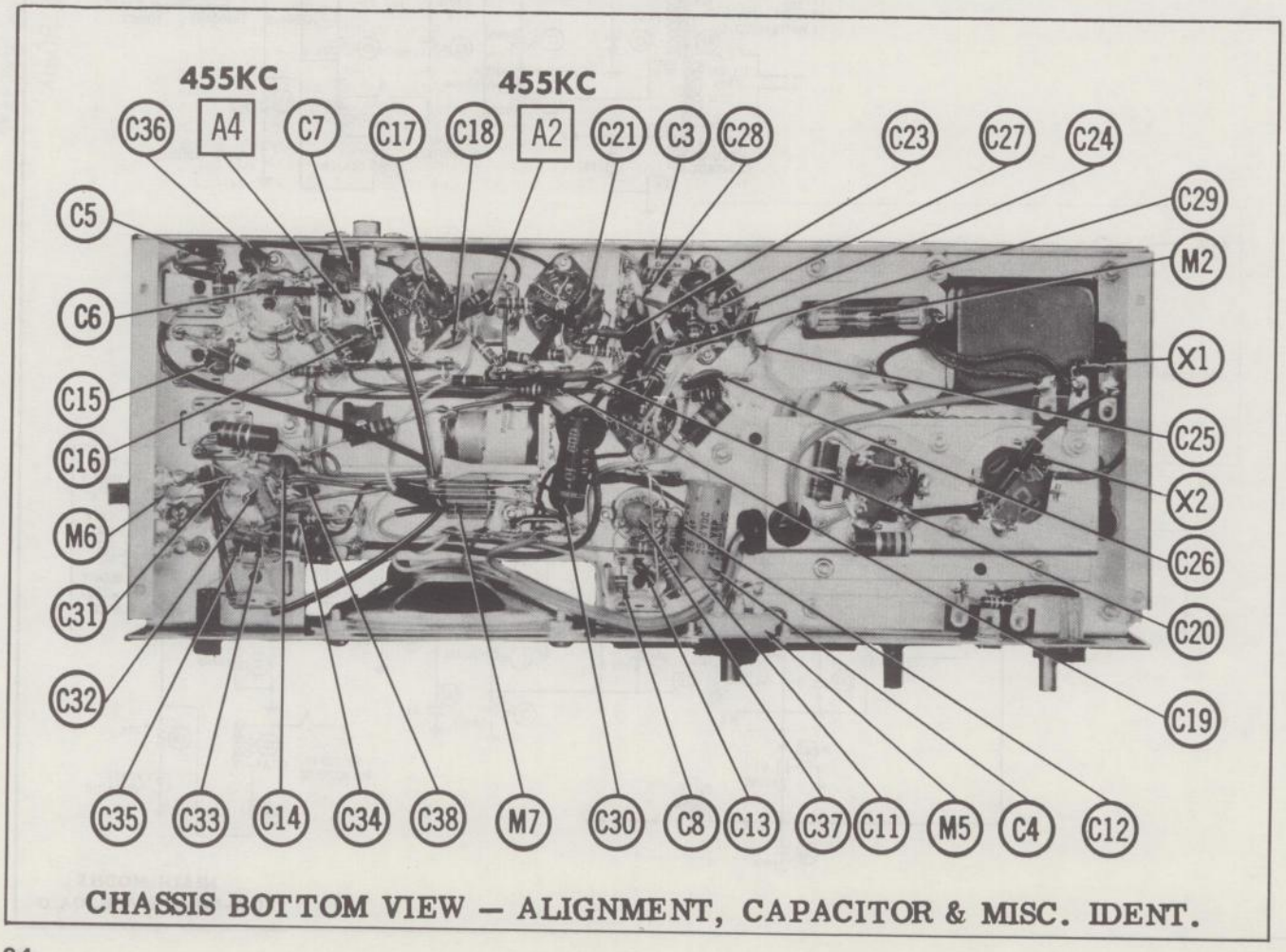

CHASSIS BOTTOM VIEW — ALIGNMENT, CAPACITOR & MISC. IDENT.

ALIGNMENT INSTRUCTIONS

ALIGNMENT INSTRUCTIONS—READ CAREFULLY BEFORE ATTEMPTING ALIGNMENT

Use only enough generator output to provide a usable indication.
Suggested Alignment Tools:

A1 thru A4, A6 thru A10..GENERAL CEMENT #8282, 8606, 8606-L, 9295, 9440
WALSCO #2526, 2543, 2544, 2545

A5.....GENERAL CEMENT #5004, 5008, 5009
WALSCO #2520

RECEIVER ALIGNMENT

Set Squelch control fully counterclockwise.
Set switch to Variable.

	SIGNAL GENERATOR COUPLING	SIGNAL GENERATOR FREQUENCY	RADIO DIAL SETTING	OUTPUT METER	ADJUST	REMARKS
1.	High side thru .01mfd to pin 2 (grid) of Mixer. Low side to chassis.	455KC (400% Mod.)		Across voice coil.	A1, A2, A3, A4	Adjust for maximum output.
2.	Fashion loop of several turns of wire and radiate signal into antenna of receiver.	27.255MC	Ch. 23	"	A5	"
3.	"	26.965MC	Ch. 1	"	A6	Adjust for maximum output. Check calibration and if necessary repeat steps 2 and 3.
4.	"	27.105MC	Ch. 12	"	A7	Adjust for maximum output.

5. Turn signal generator off. Switch to Crystal operation. Connect the DC probe of a VTVM to pin 9 (grid) of Receiver Crystal Oscillator tube, common to chassis. Adjust A8 for maximum negative voltage then adjust for a reduction of 10% on the long slope.

TRANSMITTER ALIGNMENT

ONLY THOSE PERSONS PROPERLY LICENSED ARE PERMITTED TO MAKE REPAIRS OR ADJUSTMENTS WHICH MAY RESULT IN ILLEGAL OPERATION. (REFER TO FCC RULES & REGULATIONS PART 19, SUBPART D, SECTION 19.71)

	INDICATOR	ADJUST	REMARKS
6.	#47 pilot lamp across antenna receptacle.	A9, A10	Depress mike button and adjust A9 until lamp light. Adjust A10 for maximum brilliance of dummy load lamp. Slowly turn A9 clockwise until lamp goes out. Now turn A9 counterclockwise until lamp again is lit. Turn A9 1/4 turn counterclockwise and then check to be sure oscillator starts each time mike button is depressed.
7.	"	A10	Switch to lowest channel and adjust A10 for maximum brilliance. Mark position of slug. Switch to highest channel used and readjust A10 for maximum brilliance. Make compromise adjustment of A10 by setting slug halfway between these two positions.

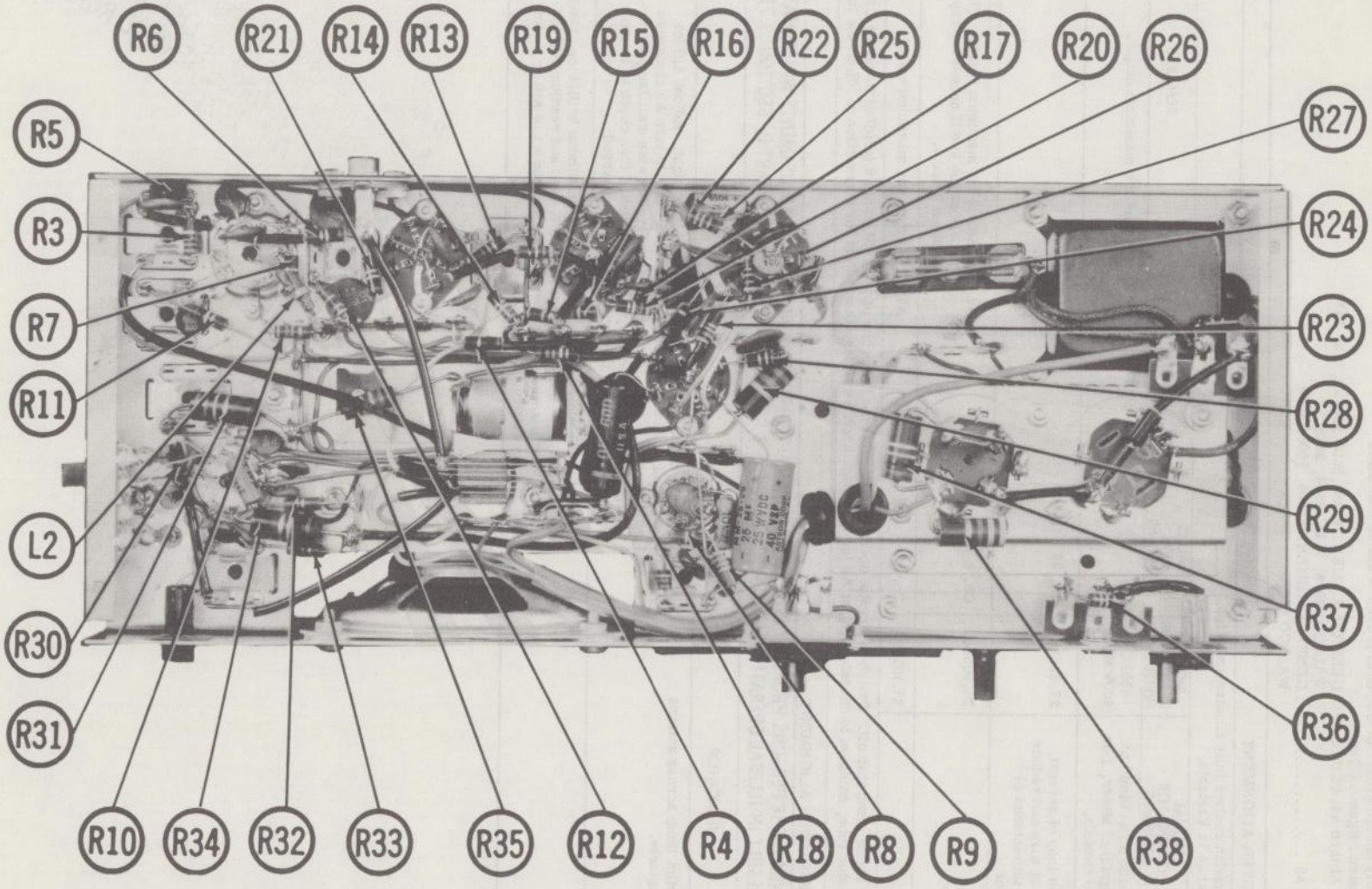

CHASSIS BOTTOM VIEW — RESISTOR & INDUCTOR IDENT.

PARTS LIST AND DESCRIPTIONS

TUBES

◆ AMPEREX ◆ GENERAL ELECTRIC ◆ RCA ◆ RAYTHEON ◆ SYLVANIA ◆

ITEM No.	USE	TYPE
V1	Rec. Mixer-Crystal Oscillator	6U8
V2	Rec. Variable Oscillator	6C4
V3	IF Amplifier	6BJ6
V4	Det. -Noise Limiter Squelch	6BJ7
V5	AF Amp. -Speech Amp.	6AN8
V6	Rec. Output-Modulator	6AQ5A
V7	Trans. Osc. -Final Amp.	6AU8

POWER RECTIFIERS & SIGNAL DIODES

ITEM No.	CURRENT RATING (Measured)	ORIGINAL Part or Type No.	RECTIFIERS		DIODES		NOTES
			RCA PART No.	SARKES TARZIAN PART No.	GENERAL ELECTRIC PART No.	RAYTHEON PART No.	
X1	.060A	57-27	1N1763	F6			
X2	.060A	57-27	1N1763	F6			

ELECTROLYTIC CAPACITORS

ITEM No.	RATING		REPLACEMENT DATA						
	CAP.	VOLT.	HEATH PART No.	AEROVOX PART No.	CORNELL-DUBILIER PART No.	GENERAL ELECTRIC PART No.	MALLORY PART No.	PYRAMID PART No.	SPRAGUE PART No.
C1A	▲50	200	25-58	PRS1585					
B	▲50	200		PRS1585		XC4-55			
C2A	▲60	450	25-93						
B	▲40	350							
C	▲20	350							
D	20	250							
C3	10	10	25-54	PTT39	NLW10-15	MT1-5	TT12X10	MLV10-10	TE-1114
C4	25	25	25-44	PRS1260	BBR25-25	QT1-11	TC26	TD-25-25	TVA-1205

FIXED CAPACITORS

ITEM No.	RATING	REMARKS	REPLACEMENT DATA					
			AEROVOX PART No.	CENTRALAB PART No.	CORNELL-DUBILIER PART No.	ELMENCO PART No.	MALLORY PART No.	SPRAGUE PART No.
C5	.01		BPD-01	DD-103	BYA10S1	CCD-103	B-110	5HK-S10
C6	.01		BPD-01	DD-103	BYA10S1	CCD-103	B-110	5HK-S10
C7	.01		BPD-01	DD-103	BYA10S1	CCD-103	B-110	5HK-S10
C8	2.2		NPO-SI 2.2	TCZ-2R2	C10V22C	CCTO-2R2	CNO-522	10TCC-V22
C9	3-12 NPO	#31-13		822-FZ		420		
C10	15 5%		1469-000015	TCZ-15	22R5Q15	CM-19B-150J	CNO-415	MS-415
C11	10 N750		N750-SI 10	TCN-10	C10Q1U	CCTN-100	CN7-410	10TCU-Q10
C12	22 5%		1469-000022	TCZ-22	22R5Q22	CM-19B-220J	CNO-422	MS-422
C13	47 5%		1469-000047	TCZ-47	22R5Q47	CM-19B-470J	CNO-447	MS-447
C14	.002		BPD-002	DD-202	BYA10D2	CCD-202	B-220	5HK-D20
C15	.002		BPD-002	DD-202	BYA10D2	CCD-202	B-220	5HK-D20
C16	.01		BPD-01	DD-103	BYA10S1	CCD-103	B-110	5HK-S10
C17	.01		BPD-01	DD-103	BYA10S1	CCD-103	B-110	5HK-S10
C18	100 N750 10%		N750-DI 100	DTN-100	C10T1U	CCTN-100	CN7-310	10TCU-T10
C19	100 N750 10%		N750-DI 100	DTN-100	C10T1U	CCTN-100	CN7-310	10TCU-T10
C20	.01		BPD-01	DD-103	BYA10S1	CCD-103	B-110	5HK-S10
C21	.01		BPD-01	DD-103	BYA10S1	CCD-103	B-110	5HK-S10
C22	.1 200V		P288N-1	DF-104	CUB2P1	2DP-3-104	GEM-201	2TM-P10
C23	.01		BPD-01	DD-103	BYA10S1	CCD-103	B-110	5HK-S10
C24	.001		BPD-001	DD-102	BYA10D1	CCD-102	B-210	5HK-D10
C25	.001		BPD-001	DD-102	BYA10D1	CCD-102	B-210	5HK-D10
C26	.01		BPD-01	DD-103	BYA10S1	CCD-103	B-110	5HK-S10
C27	.001		BPD-001	DD-102	BYA10D1	CCD-102	B-210	5HK-D10
C28	.01		BPD-01	DD-103	BYA10S1	CCD-103	B-110	5HK-S10

FIXED CAPACITORS (cont)

ITEM No.	RATING	REMARKS	REPLACEMENT DATA					
			AEROVOX PART No.	CENTRALAB PART No.	CORNELL-DUBILIER PART No.	ELMENCO PART No.	MALLORY PART No.	SPRAGUE PART No.
C29	.01		BPD-01	DD-103	BYA10S1	CCD-103	B-110	5HK-S10
C30	.01 600V		P688N-01	D6-103	CUB6S1	6DP-2-103	GEM-611	6TM-S10
C31	.002		BPD-002	DD-202	BYA10D2	CCD-202	B-220	5HK-D20
C32	4.7 N750 10%		N750-SI 5.0	TCN-5	C10V5U	CCTN-050	CN7-547	10TCU-V50
C33	.002		BPD-002	DD-202	BYA10D2	CCD-202	B-220	5HK-D20
C34	.002		BPD-002	DD-202	BYA10D2	CCD-202	B-220	5HK-D20
C35	.002		BPD-002	DD-202	BYA10D2	CCD-202	B-220	5HK-D20
C36	.002		BPD-002	DD-202	BYA10D2	CCD-202	B-220	5HK-D20
C37	.002		BPD-002	DD-202	BYA10D2	CCD-202	B-220	5HK-D20
C38	.002		BPD-002	DD-202	BYA10D2	CCD-202	B-220	5HK-D20
C39	.01		BPD-01	DD-103	BYA10S1	CCD-103	B-110	5HK-S10
C40	.01		BPD-01	DD-103	BYA10S1	CCD-103	B-110	5HK-S10
C41	.01		BPD-01	DD-103	BYA10S1	CCD-103	B-110	5HK-S10
C42	.01		BPD-01	DD-103	BYA10S1	CCD-103	B-110	5HK-S10
C43	.02 1600V				CUB16S2	16DP-4-203	GEM-1612	MB-S2
C44	.02 1600V				CUB16S2	16DP-4-203	GEM-1612	MB-S2
C45	.01		BPD-01	DD-103	BYA10S1	CCD-103	B-110	5HK-S10
C46	.01		BPD-01	DD-103	BYA10S1	CCD-103	B-110	5HK-S10
C47	.01 600V	Note 1						47P6
C48	1mfd 200V		P288N-1.0		CUB2W1		GEM-21	2TM-M1
C49	.2 50V	Note 1	P288N-2		CUB2P22	1DP-3-204	GEM-402	4TM-P20

Heath Part Number.
Note 1. Not used in some DC operated versions.

CONTROLS

All wattages 1/2 watt, or less, unless otherwise listed.

ITEM No.	USE	RESISTANCE	REPLACEMENT DATA				
			HEATH PART No.	CENTRALAB PART No.	CLAROSTAT PART No.	CTS-IRC PART No.	MALLORY PART No.
R1	Volume	1meg	19-53	B-70-S, or (AB-70, AK-11, KR-1)	A47-1meg-Z/FS-3 SWE-12	Q13-137, 76-1, or (BU2, CF26, SS1, GC)*	U53
R2	Power Off-On Squelch	100K	10-108	B-40, or (AB-40, AK-11)	A47-100K-Z/FS-3	Q11-128, or (BU2, CF13, SS1, DC)*	US-26 U41

* "SNAPTROL"

RESISTORS

All wattages 1/2 watt, or less, unless otherwise listed.

ITEM No.	RATING	REPLACEMENT DATA		
		IRC PART No.	WORKMAN PART No.	REMARKS
R3	3300Ω			
R4	1meg			
R5	1meg			
R6	100K			
R7	3300Ω			
R8	22K			
R9	33K			
R10	47K			
R11	100K			
R12	3.3meg			
R13	56K			
R14	18K			
R15	82K			
R16	680K			
R17	1meg			
R18	680K			
R19	470K			
R20	470K			
R21	100K			

ITEM No.	RATING	REPLACEMENT DATA		
		IRC PART No.	WORKMAN PART No.	REMARKS
R22	270K			
R23	330K			
R24	1.5meg			
R25	1500Ω			
R26	10meg			
R27	470K			
R28	270K			
R29	470Ω 2W			
R30	47K			
R31	22K 2W			
R32	22K			
R33	100Ω			
R34	10K 2W			
R35	22K 1W			
R36	270K			
R37	10K 2W			
R38	330Ω 2W			
R39	100K			
R40	43Ω 2W			Note 1

Note 1. DC operated models only.

PARTS LIST AND DESCRIPTIONS (Continued)

COILS (RF-IF)

ITEM No.	USE	REPLACEMENT DATA HEATH PART No.	Merit PART No.	Miller PART No.	Stancor PART No.	Workman PART No.	NOTES
L1	Ant.	40-310					① Not used in some versions.
L2	RF Choke (30uh)	45-27					
L3	Osc.	40-313					
L4	Osc. Plate	40-312					
L5	1st IF	52-38	BC-352	12-C1	RTC-8632	T607	
L6	2nd IF	52-39	BC-353	12-C2	RTC-8633	T608	
L7	Osc. Plate	40-312					
L8	Final	40-311					
L9	RF Choke (90uh)	45-7					
L10	Hash Choke	①					

TRANSFORMER (POWER)

ITEM No.	RATING PRI.	SEC. 1	SEC. 2	REPLACEMENT DATA HEATH PART No.	Merit PART No.	Stancor PART No.	Thordarson PART No.	Triad PART No.	NOTES
T1	117V ⓐ .44A	100V ⓐ .250A	6.3V ⓐ 3A	54-104					AC Operation
	PRI. 12.6VCT ⓐ 2.3A (or) 6.3VCT ⓐ 4.6A	SEC. 1 100V ⓐ .250A		55-5					DC Operation

TRANSFORMER (AUDIO OUTPUT)

ITEM No.	IMPEDANCE PRI.	SEC.	REPLACEMENT DATA HEATH PART No.	Merit PART No.	Stancor PART No.	Thordarson PART No.	Triad PART No.	NOTES
T2	5800Ω Tap ⓐ 4900Ω	3-4Ω	51-65					

SPEAKER

ITEM No.	TYPE SIZE	FIELD	V. C. IMP.	REPLACEMENT DATA HEATH PART No.	QUAM PART No.	NOTES
SP1	3½"	PM	3-4Ω	401-21	3A07	

VIBRATOR

ITEM No.	TYPE	INPUT VOLTS	FREQUENCY	REPLACEMENT DATA HEATH PART No.	CORNELL-DUBILIER PART No.	MALLORY PART No.	RADIART PART No.	NOTES
M1	Interrupter	6-12	115~	68-5	6301	G1601	6301	

FUSES

ITEM No.	TYPE	RATING	REPLACEMENT DATA HEATH PART No. FUSE	HEATH PART No. HOLDER	LITTELFUSE PART No. FUSE	LITTELFUSE PART No. HOLDER	BUSS PART No. FUSE	BUSS PART No. HOLDER
M2	3AG	1½A 250V	421-1 ①	422-1	31201.5 (3AG 1½A 250V)	357001	AGC 1½	4405
M3	SFE	8A 32V	421-4 ②	423-6	307008 (SFE 8A 32V)	155008	SFE 8	HDH

① AC Operation. ② DC Operation.

MISCELLANEOUS

ITEM No.	PART NAME	HEATH PART No.	NOTES
M4	Tuning Cap	26-66	1 Gang
M5	Switch	60-4	Crystal-Variable (DPDT Slide Type)
M6	Switch	60-10	Crystal Selector (3-Position Slide Type)
M7	Relay	69-14	
M8	Crystal		Receive
M9	Crystal		Transmit
	Microphone	480-14	

CABINETS & CABINET PARTS

(When Ordering Cabinets & Cabinet Parts, Specify Model, Chassis & Color)

NAME	PART NO.	DESCRIPTION
Dial Scale	205-M221F362	
Dial Pointer	100-M270	
Knob	462-78	
Front Panel	100-M271	
Cabinet	90-M131F	

WIRING DATA

General-use Unshielded Hook-up Wire ..... Use BELDEN No. 8530 (Solid) Available in 12 Colors
8524 (Stranded) Available in 12 Colors

Power Cord ..... Use BELDEN No. 17106 (Plastic) or 17126 (Rubber) - 6 Ft.
17109 (Plastic) or 17129 (Rubber) - 9 Ft.

Power Cord (Interlock Type) ..... Use BELDEN No. 8874 (Rubber) or 8895 (Plastic)

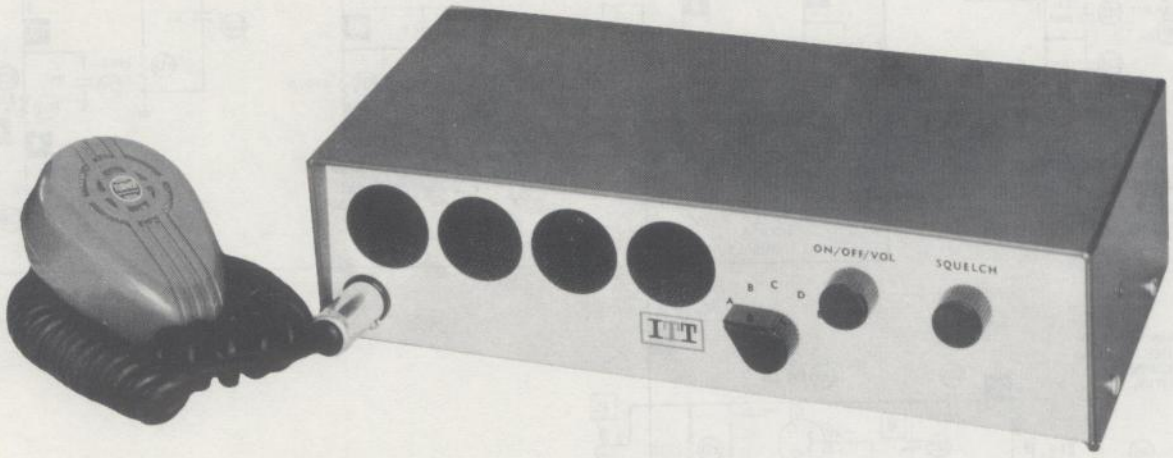

ITT
MODEL 320

TRADE NAME	ITT Model 320
MANUFACTURER	Distributor Products Div., International Telephone & Telegraph Corp., P.O. Box 99, Lodi, N.J.
TYPE SET	AC-Battery Operated 18 Transistor Citizens Band Transmitter-Receiver
POWER SUPPLY	110 — 120 Volts AC (or) 12 Volt Storage Battery
RATING	9 Watts, .105 Amp. @117 Volts AC (Receive) .36 Amp. @12.6 Volts DC (Receive) 17 Watts, .172 Amp. @117 Volts AC (Transmit) .82 Amp. @12.6 Volts DC (Transmit)
TUNING RANGE	Any 5 of Citizens Band Channels 1 thru 22

NOTICE

ONLY THOSE PERSONS PROPERLY LICENSED ARE PERMITTED TO MAKE REPAIRS OR ADJUSTMENTS WHICH MAY RESULT IN ILLEGAL OPERATION. (REFER TO FCC RULES & REGULATIONS PART 19, SUBPART D, SECTION 19.71.)

HOWARD W. SAMS & CO., INC. Indianapolis 6, Indiana

LY646

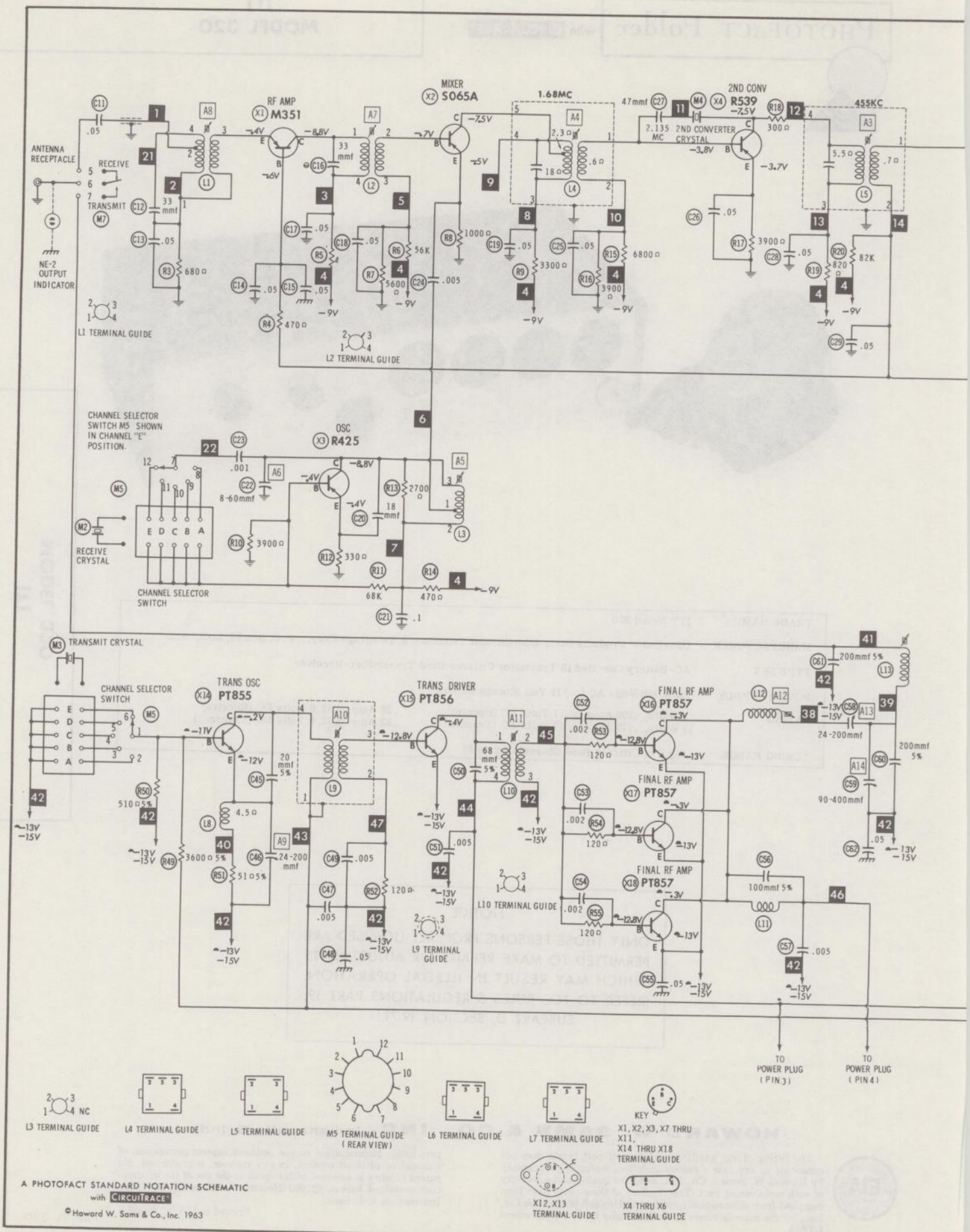

A PHOTOFACT STANDARD NOTATION SCHEMATIC with CIRCUITRACE

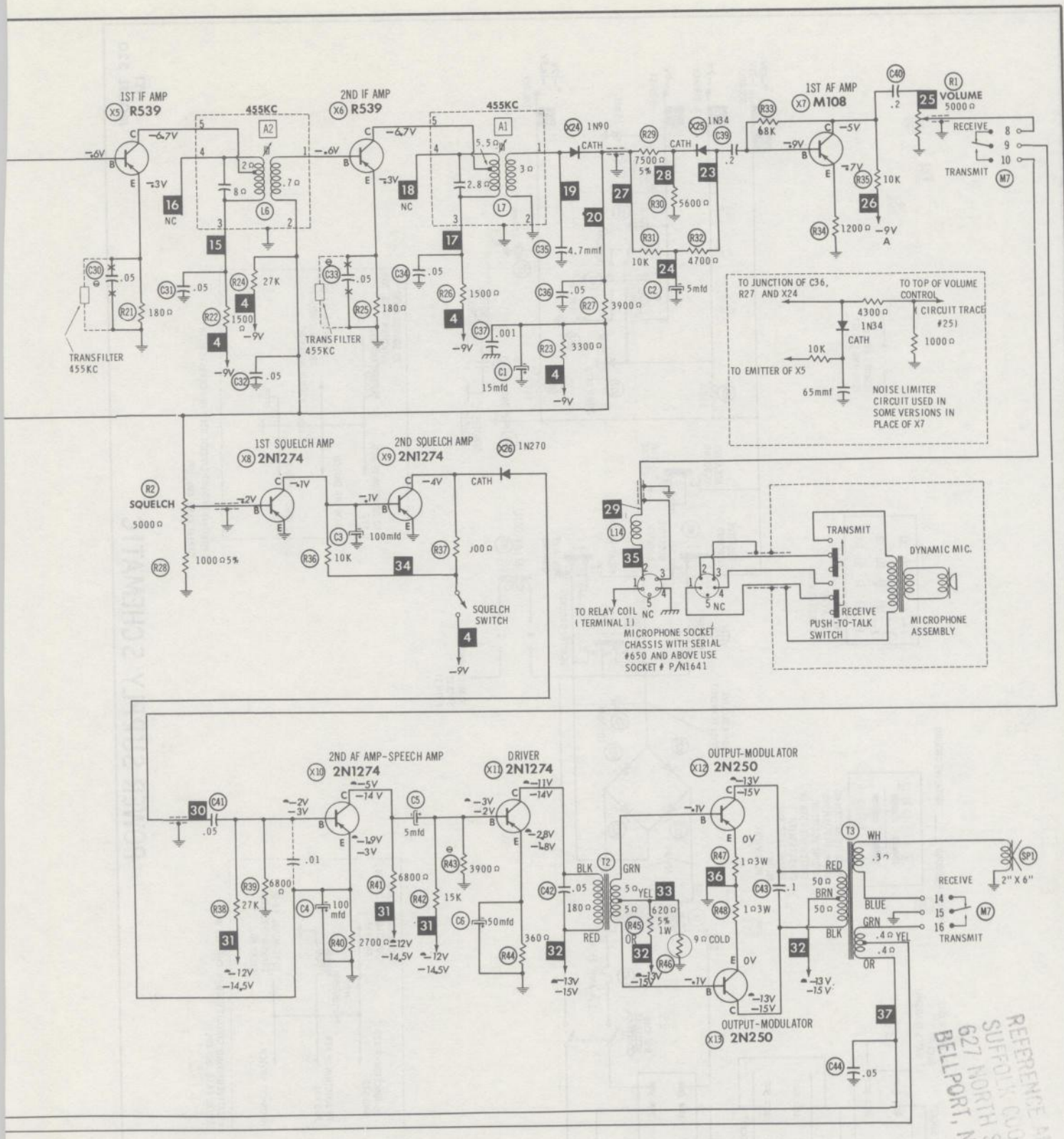

ALL MEASURMENTS MADE IN RECEIVE POSITION UNLESS OTHERWISE DESIGNATED
▲ MEASURED IN TRANSMIT POSITION

⊖ SEE PARTS LIST FOR ALTERNATE VALUE OR APPLICATION

NUMBERS ASSIGNED TO COILS, SWITCHES, PLUGS, SOCKETS, AND TRANSFORMERS ARE TO FACILITATE CIRCUIT TRACING OR COMPONENT REPLACEMENT AND MAY NOT NECESSARILY BE FOUND ON THE UNIT.

RESISTANCE MEASUREMENTS NOT GIVEN BECAUSE OF THE WIDE VARIATION IN INTERNAL TRANSISTOR RESISTANCE.

1. DC voltage measurements taken with vacuum tube voltmeter.
2. Socket connections or transistor terminals are shown as bottom views.
3. Measured values are from socket pin or terminal to common ground.
4. Nominal tolerance on component values makes possible a variation of ±15% in voltage and resistance readings.
5. Volume control at maximum, no signal applied for voltage measurements.

MAIN SCHEMATIC

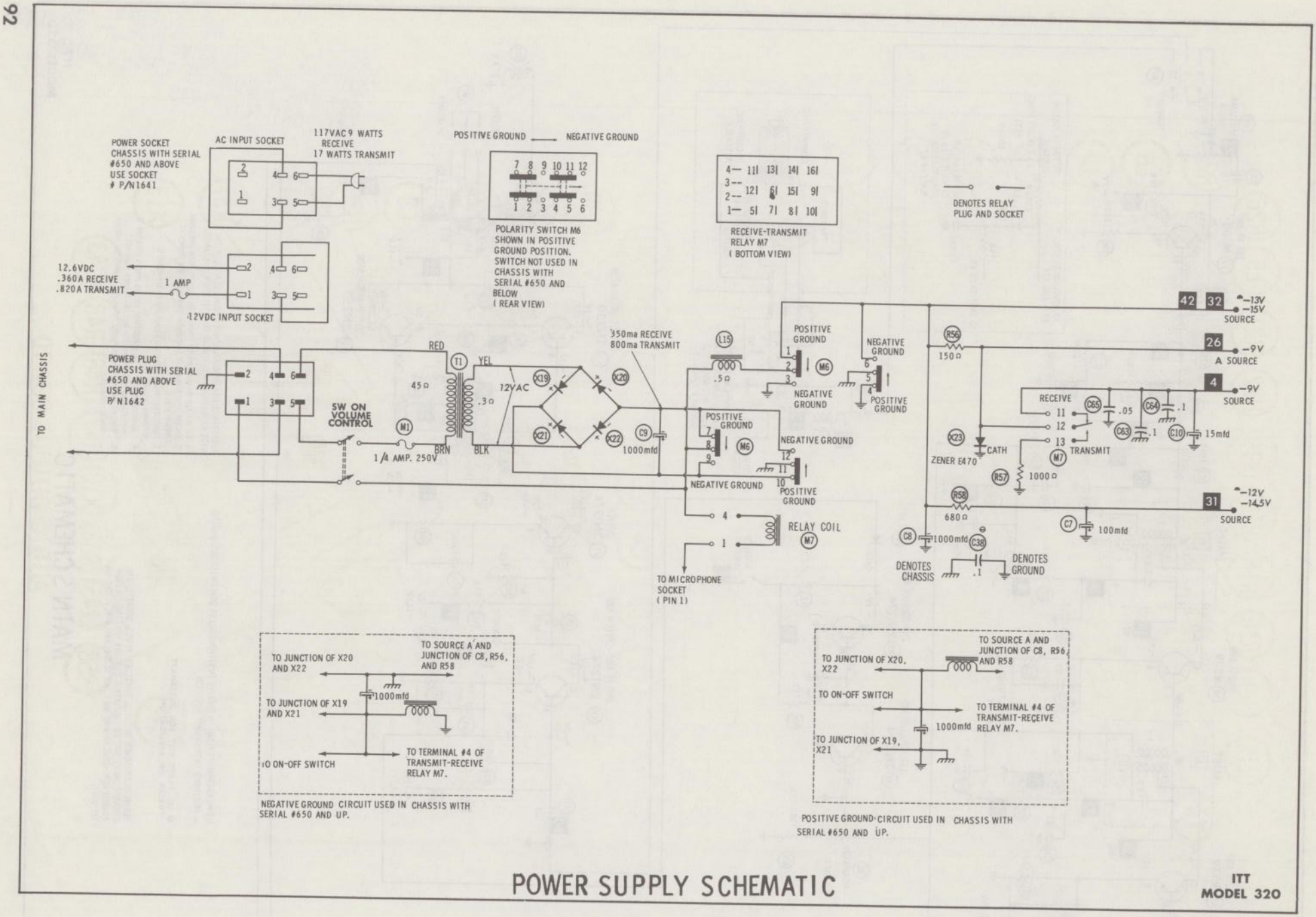

POWER SUPPLY SCHEMATIC

ITT
MODEL 320

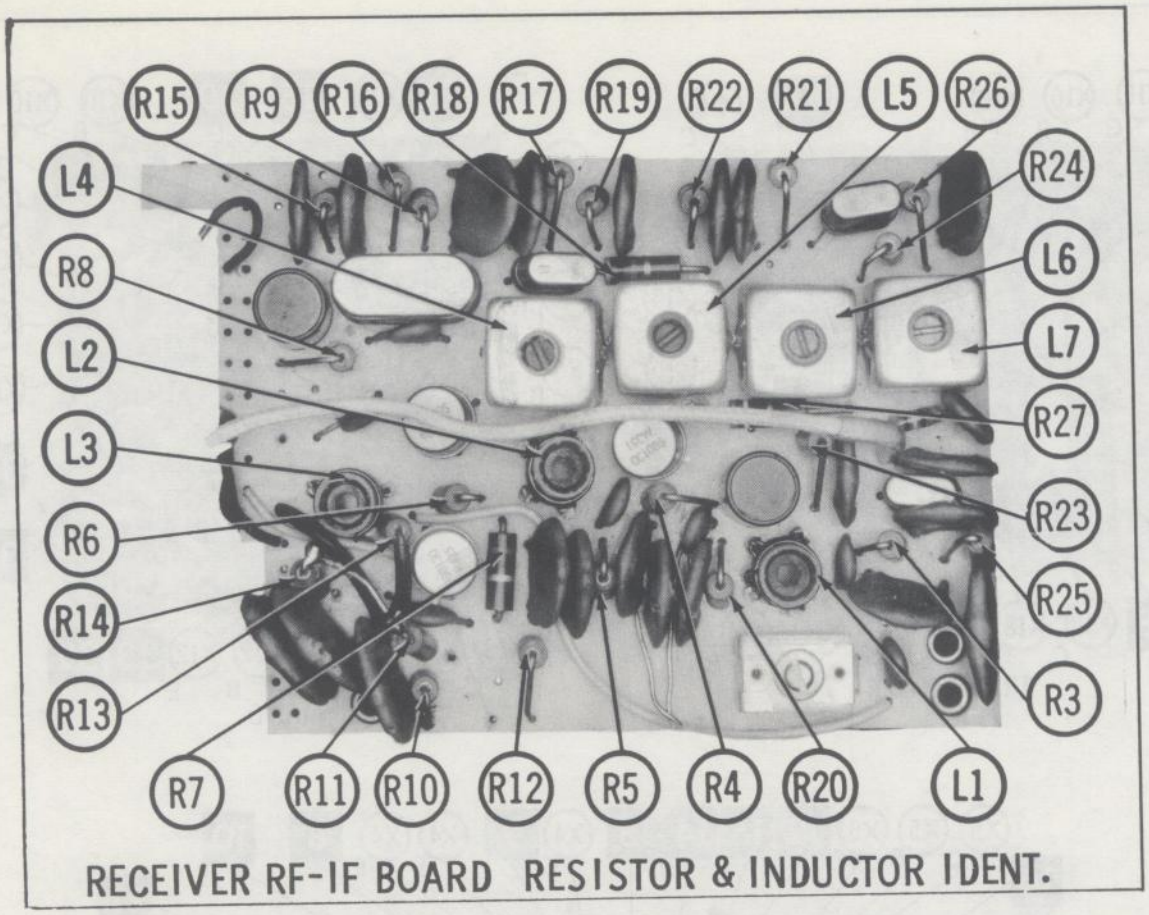

RECEIVER RF-IF BOARD RESISTOR & INDUCTOR IDENT.

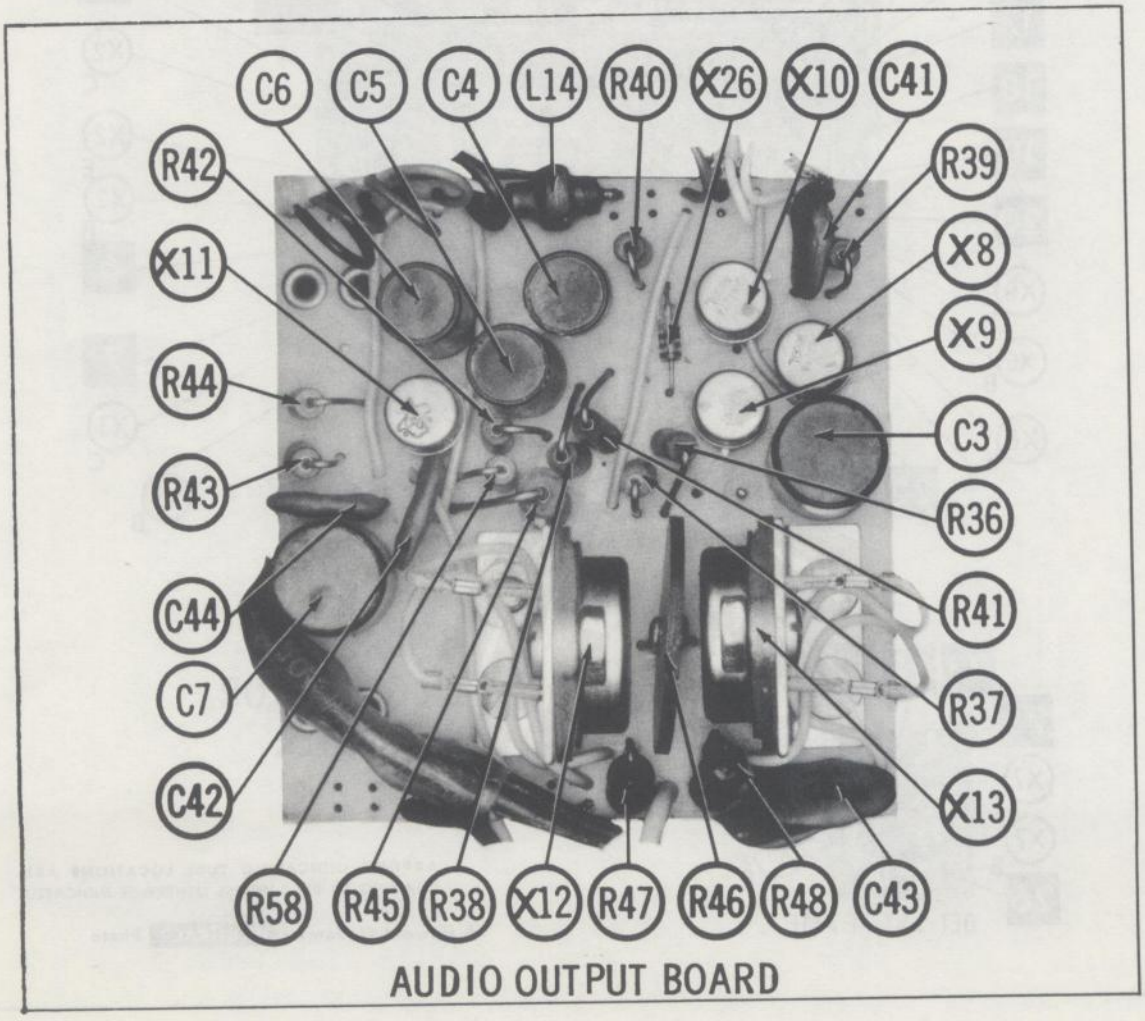

AUDIO OUTPUT BOARD

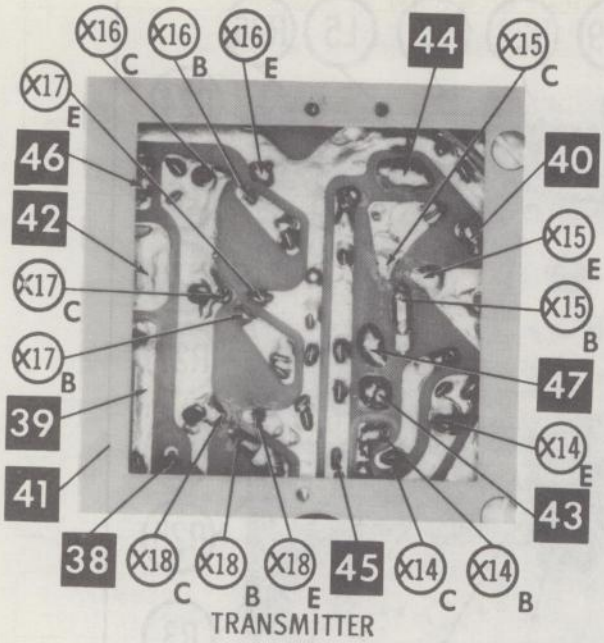

TRANSMITTER

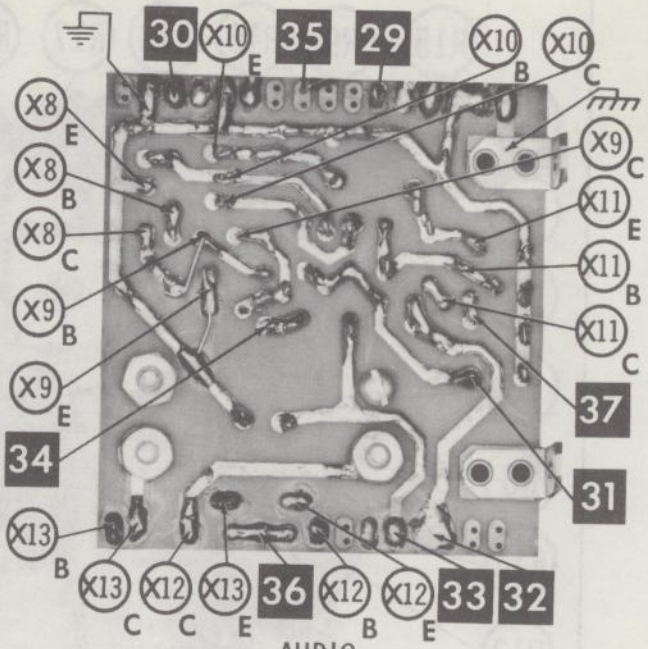

AUDIO

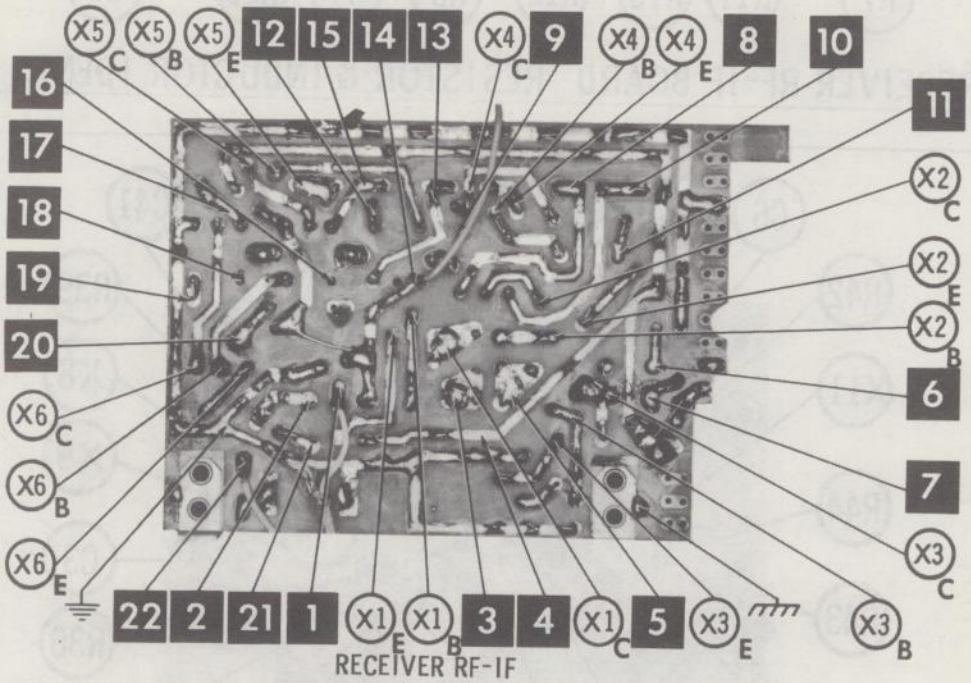

RECEIVER RF-IF

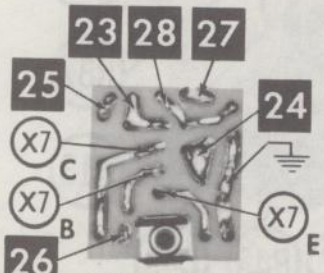

DET-1ST AF AMP

B- BASE
C- COLLECTOR
E- EMITTER

ARROWS INDICATING TUBE LOCATIONS ARE POINTING TO PIN 1 UNLESS OTHERWISE INDICATED

A Howard W. Sams CIRCUITRACE® Photo

ALIGNMENT INSTRUCTIONS

ALIGNMENT INSTRUCTIONS—READ CAREFULLY BEFORE ATTEMPTING ALIGNMENT

Suggested Alignment Tools:

A1, A2, A3, A4.....	GENERAL CEMENT #5009, 8195, 8274, 8275, 8728, 8729, 8987, 8988, 8989 WALSCO #2515, 2531, 2532
A5, A7, A8, A10, A11, A14.....	GENERAL CEMENT #8282, 8606, 8606-L, 9295, 9440 WALSCO #2526, 2543, 2544, 2545
A6, A9, A12, A13.....	GENERAL CEMENT #5000, 5003, 5066, 8271, 8272, 8276, 8277, 8290, 8609, 8722, 9150, 9298 WALSCO #2515, 2516, 2518, 2519, 2525, 2541

RECEIVER ALIGNMENT

Connect output meter across voice coil.

	SIGNAL GENERATOR	CHANNEL	ADJUST	REMARKS
1.	High side thru .05mfd to base of X2, low side to ground. (455KC, 400% Mod.)	Any	A1, A2, A3	Adjust for maximum deflection.
2.	Tune generator to 1.68MC (400% Mod.)	Any	A4	Adjust for maximum deflection.
3.	Not Used	Highest Used	A5, A6	Connect DC VTVM to X2 emitter, low side to ground. Adjust for maximum deflection.
4.	High side to antenna terminal, low side to ground. Tune generator to channel frequency.	Center Channel	A7, A8	Adjust for maximum deflection.

TRANSMITTER ALIGNMENT

ONLY THOSE PERSONS PROPERLY LICENSED ARE PERMITTED TO MAKE REPAIRS OR ADJUSTMENTS WHICH MAY RESULT IN ILLEGAL OPERATION. (REFER TO FCC RULES & REGULATIONS PART 19, SUBPART D, SECTION 19.71)

	SPECIAL INSTRUCTIONS	INDICATOR	ADJUST	REMARKS
1.	Place channel selector switch near center channel. Connect antenna or dummy load.	RF Wattmeter or Field Strength Meter. Remove shorting wire between pins 3 and 4 of power socket. Connect an 0-500 DC Milliammeter between these two pins.	A9, A10, A11, A12	Key transmitter. Adjust for maximum output. Milliammeter must not exceed 380MA. Reconnect shorting wire.
2.	Connect antenna.	RF Wattmeter or Field Strength Meter.	A13, A14	Adjust for maximum output.

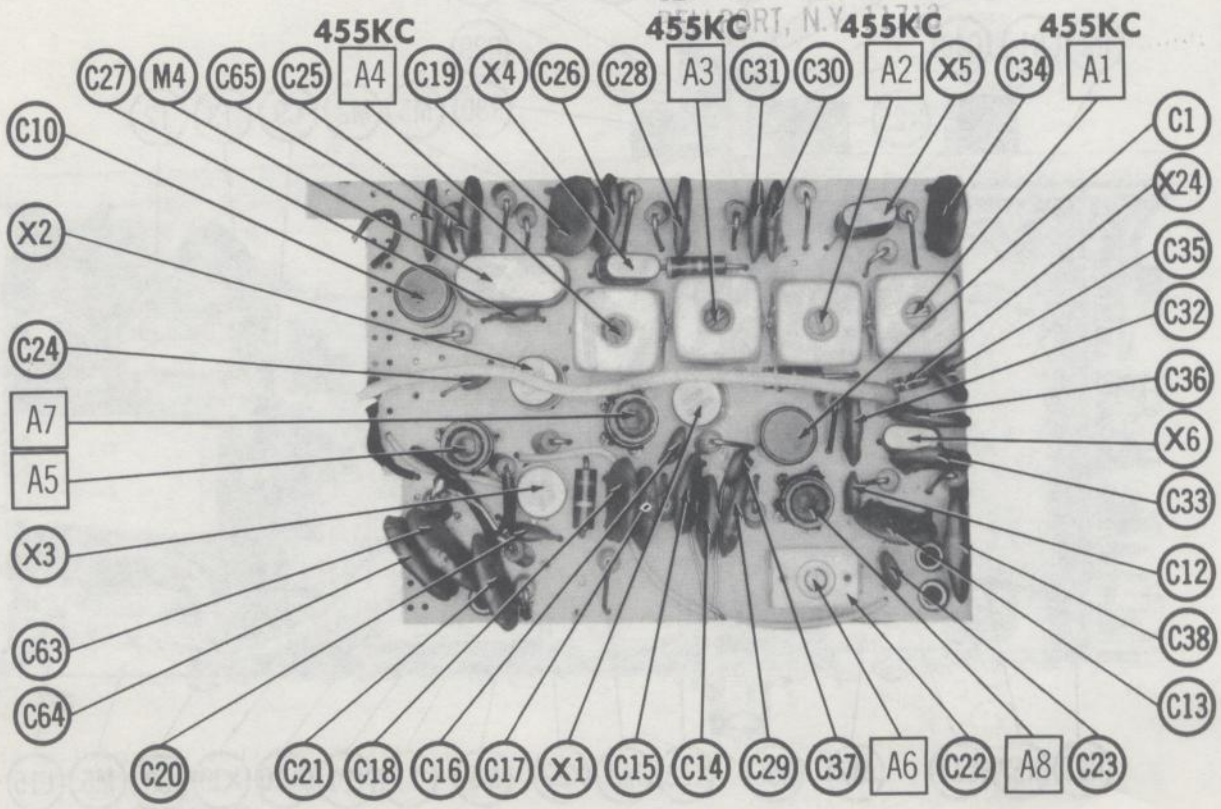

RECEIVER RF-IF BOARD- ALIGNMENT, CAPACITOR & MISC. IDENT.

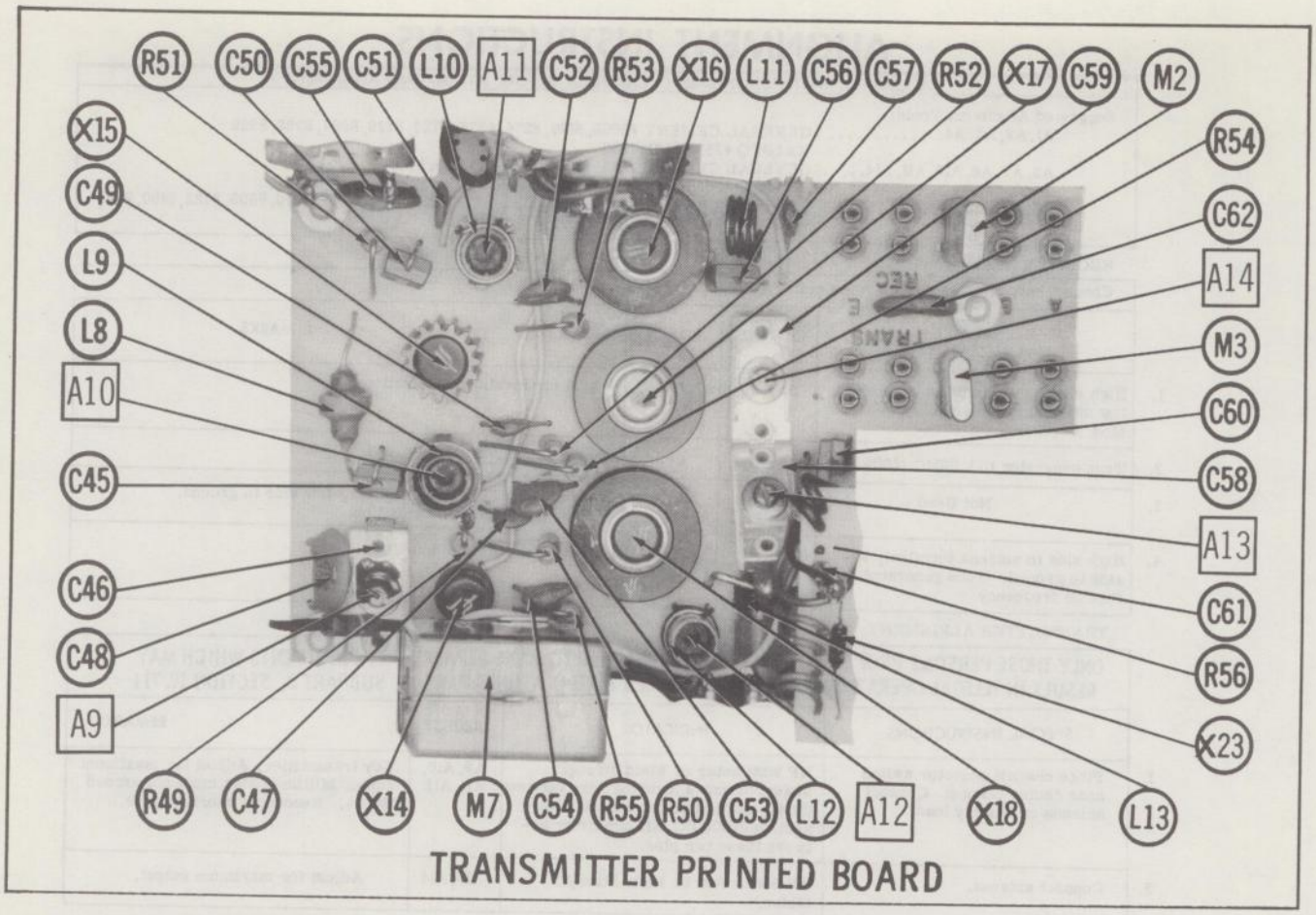

TRANSMITTER PRINTED BOARD

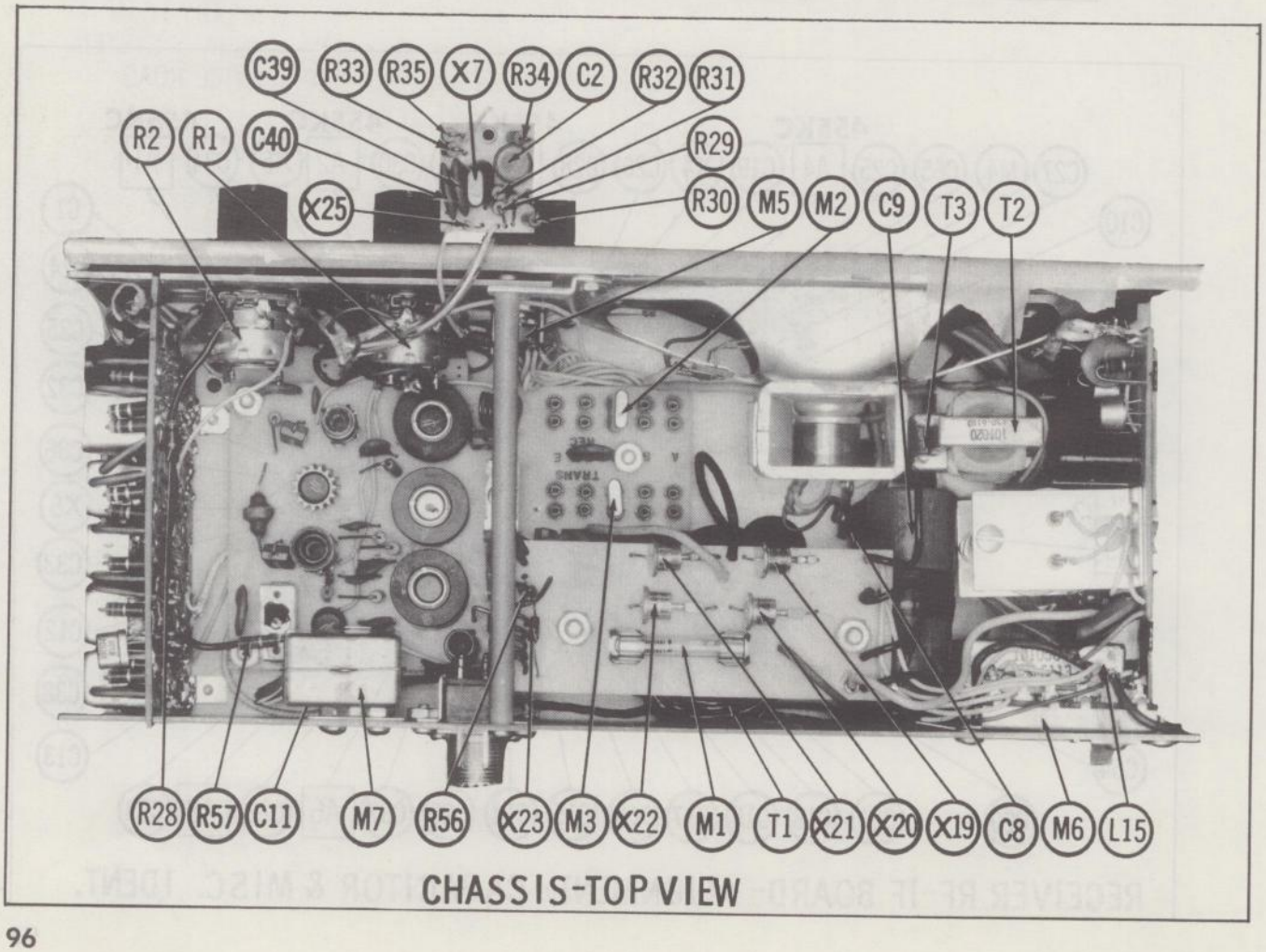

CHASSIS-TOP VIEW

PARTS LIST AND DESCRIPTION

TRANSISTORS

ITEM No.	ORIG. TYPE	USE	REPLACEMENT DATA: GENERAL ELECTRIC PART No.	REPLACEMENT DATA: RCA PART No.	NOTES
X1	M351	RF Amplifier	GE-1	2N1177	PNP
X2	S065A	Mixer	GE-1	2N1179	PNP
X3	R425	Oscillator	GE-1	2N1178	PNP
X4	R539	2nd Converter	GE-1	2N1426	PNP
X5	R539	1st IF Amplifier	GE-1	2N1180	PNP
X6	R539	2nd IF Amplifier	GE-1	2N1180	PNP
X7	M108	1st AF Amplifier	GE-2	2N406	PNP
X8	2N1274	1st Squelch Amplifier	GE-2	2N591	PNP
X9	2N1274	2nd Squelch Amplifier	GE-2	2N591	PNP
X10	2N1274	2nd AF Amp. -Speech Amp.	GE-2	2N591	PNP
X11	2N1274	Driver	GE-2	2N591	PNP
X12	2N250	Output-Modulator	GE-3	2N301	PNP
X13	2N250	Output-Modulator	GE-3	2N301	PNP
X14	PT855	Transmit-Oscillator			NPN
X15	PT856	Transmit-Driver			NPN
X16	PT857	Final RF Amplifier			NPN
X17	PT857	Final RF Amplifier			NPN
X18	PT857	Final RF Amplifier			NPN

POWER RECTIFIERS & SIGNAL DIODES

ITEM No.	CURRENT RATING (Measured)	ORIGINAL Part or Type No.	RECTIFIERS: RCA PART No.	RECTIFIERS: SARKES TARZIAN PART No.	DIODES	NOTES
X19	.800A	1403	1N3193	10H		AC Rectifier (1N536)
X20	.800A	1403	1N3193	10H		
X21	.800A	1403	1N3193	10H		
X22	.800A	1403	1N3193	10H		
X23		0624				Shunt Regulator (Zener Z470)
X24		1153				Audio Detector (1N90)
X25		1679				Noise Limiter (1N34)
X26		1154				Squelch (1N270)

ELECTROLYTIC CAPACITORS

ITEM No.	RATING: CAP.	RATING: VOLT.	REPLACEMENT DATA: ITT PART No.	AEROVOX PART No.	CORNELL-DUBILIER PART No.	GENERAL ELECTRIC PART No.	MALLORY PART No.	PYRAMID PART No.	SPRAGUE PART No.
C1	15	15	1013	BCD15015	ECPB409	MT1-10	TT15X15	MLV15-15	VL-1168
C2	5	12	Note 1	BCD12005	ECPB405	MT1-3	TT12X5	MLV5-12	VL-1124
C3	100	12	0656	BCD12100	ECPB417	MT1-19		MLV100-12	VL-1051
C4	100	3	0689	BCD3100	ECPB417	MT1-22	PET1400	MLV100-3	VL-1051
C5	5	15	1431	BCD15005	ECPB405	MT1-3	TT12X5	MLV5-12	VL-1124
C6	50	6	1113	BCD6050	ECPB115	MT1-15	TT6X50	MLV50-6	VL-1094
C7	100	12	0656	BCD12100	ECPB417	MT1-19		MLV100-12	VL-1051
C8	1000	15	1404	PRS1230	BR1000-15	QT1-32	TC1501	TD-1000-15	TVA-1163
C9	1000	15	1404	PRS1230	BR1000-15	QT1-32	TC1501	TD-1000-15	TVA-1163
C10	15	15	1013	BCD15015	ECPB409	MT1-10	TT15X15	MLV15-15	VL-1168

Note 1. Not used in some versions.

FIXED CAPACITORS

ITEM No.	RATING	REMARKS	REPLACEMENT DATA: AEROVOX PART No.	CENTRALAB PART No.	CORNELL-DUBILIER PART No.	ELMENCO PART No.	MALLORY PART No.	SPRAGUE PART No.
C11	.05		TTD-05	DDA-503	H-05S5			TG-S50
C12	33		DI-33	DD-330	L10Q33	CCD-330	GP433	5GA-Q33
C13	.05		TTD-05	DDA-503	H-05S5			TG-S50
C14	.05		TTD-05	DDA-503	H-05S5			TG-S50
C15	.05		TTD-05	DDA-503	H-05S5			TG-S50
C16	33	(18) †	DI-33	DD-330	L10Q33	CCD-330	GP433	5GA-Q33
C17	.05		TTD-05	DDA-503	H-05S5			TG-S50
C18	.05		TTD-05	DDA-503	H-05S5			TG-S50

FIXED CAPACITORS (cont)

ITEM No.	RATING	REMARKS	REPLACEMENT DATA: AEROVOX PART No.	CENTRALAB PART No.	CORNELL-DUBILIER PART No.	ELMENCO PART No.	MALLORY PART No.	SPRAGUE PART No.
C19	.05		TTD-05	DDA-503	H-05S5			TG-S50
C20	18		DI-18	DD-180	L10Q18	CCD-180	GP418	5GA-Q18
C21	.1		TTD-1	DA-104	H-05P1			TH-P10
C22	8-60	#1417				404		
C23	.001		DI-001	DM-102	H-05D1	CCD-102	GP210	5GA-D10
C24	.005		TTD-005	DM-502	H-05D5	CCD-502	TA-250	TH-D50
C25	.05		TTD-05	DDA-503	H-05S5			TG-S50
C26	.05		TTD-05	DDA-503	H-05S5			TG-S50
C27	47		DI-47	DD-470	L10Q47	CCD-470	GP447	5GA-Q47
C28	.05		TTD-05	DDA-503	H-05S5			TG-S50
C29	.05		TTD-05	DDA-503	H-05S5			TG-S50
C30	.05		TTD-05	DDA-503	H-05S5			TG-S50
C31	.05		TTD-05	DDA-503	H-05S5			TG-S50
C32	.05		TTD-05	DDA-503	H-05S5			TG-S50
C33	.05		TTD-05	DDA-503	H-05S5			TG-S50
C34	.05		TTD-05	DDA-503	H-05S5			TG-S50
C35	4.7		DI-4.7	TCZ-4R7				
C36	.05		TTD-05	DDA-503	H-05S5			TG-S50
C37	.001		DI-001	DM-102	H-05D1	CCD-102	GP210	5GA-D10
C38	.1	(.2) †	TTD-1	DA-104	H-05P1			TH-P10
C39	.2	#1502		UK10-204				
C40	.2	#1502		UK10-204				
C41	.05		TTD-05	DDA-503	H-05S5			TG-S50
C42	.05		TTD-05	DDA-503	H-05S5			TG-S50
C43	.1		TTD-1	DA-104	H-05P1			TH-P10
C44	.05		TTD-05	DDA-503	H-05S5			TG-S50
C45	20 5%		CM-15C-200	TCN-20	22R5Q2	CM-15C-200		MS-42
C46	24-200	#1422				425		
C47	.005		TTD-005	DM-502	H-05D5	CCD-502	TA-250	TH-D50
C48	.05		TTD-05	DDA-503	H-05S5			TG-S50
C49	.005		TTD-005	DM-502	H-05D5	CCD-502	TA-250	TH-D50
C50	68 5%		CM-15E-680	TCN-68	22R5Q68	CM-15E-680		MS-468
C51	.005		TTD-005	DM-502	H-05D5	CCD-502	TA-250	TH-D50
C52	.002			DM-202	L10D2	CCD-202	GP220	5GA-D20
C53	.002			DM-202	L10D2	CCD-202	GP220	5GA-D20
C54	.002			DM-202	L10D2	CCD-202	GP220	5GA-D20
C55	.05		TTD-05	DDA-503	H-05S5			TG-S50
C56	100 5%		CM-15E-101	TCN-100	22R5T1	CM-15E-101	MCE235	MS-31
C57	.005		TTD-005	DM-502	H-05D5	CCD-502	TA-250	TH-D50
C58	24-200	#1422				425		
C59	90-400	#1421				429		
C60	200 5%		CM-15E-201	TCN-200	22R5T2	CM-15E-201	MCE237	MS-32
C61	200 5%		CM-15E-201	TCN-200	22R5T2	CM-15E-201	MCE237	MS-32
C62	.05		TTD-05	DDA-503	H-05S5			TG-S50
C63	.1		TTD-1	DA-104	H-05P1			TH-P10
C64	.1		TTD-1	DA-104	H-05P1			TH-P10
C65	.05		TTD-05	DD-503	H-05S5			TG-S50

ITT Part Number.
† Alternate Value.

CONTROLS

All wattages 1/2 watt, or less, unless otherwise listed.

ITEM No.	USE	RESISTANCE	REPLACEMENT DATA: ITT PART No.	CENTRALAB PART No.	CLAROSTAT PART No.	CTS-IRC PART No.	MALLORY PART No.
R1	Volume, Power On-Off	5000Ω	1007	B-11, KR-2 or (F2-5000, SU204, KR-1)		Q13-114, 76-2	U-12, US27 or (UA53A, US42, SF1000)
R2	Squelch Squelch On-Off	5000Ω	1189	B-11, KR-1 or (F2-5000, SU204, KR-2)		Q13-114, 76-1	U-12, US26 or (UA53A, US41, SF1000)

RESISTORS

All wattages 1/2 watt, or less, unless otherwise listed.

ITEM No.	RATING	REPLACEMENT DATA: IRC PART No.	WORKMAN PART No.	REMARKS	ITEM No.	RATING	REPLACEMENT DATA: IRC PART No.	WORKMAN PART No.	REMARKS
R3	680Ω				R5	470Ω			
R4	470Ω				R6	56K			

PARTS LIST AND DESCRIPTION (CONTINUED)

RESISTORS (cont)

All wattages 1/2 watt, or less, unless otherwise listed.

ITEM No.	RATING	REPLACEMENT DATA		
		IRC PART No.	WORKMAN PART No.	REMARKS
R7	5600Ω			
R8	1000Ω			
R9	3300Ω			
R10	3900Ω			
R11	68K			
R12	330Ω			
R13	2700Ω			
R14	470Ω			
R15	6800Ω			
R16	3900Ω			
R17	3900Ω			
R18	300Ω			
R19	820Ω			
R20	82K			
R21	180Ω			
R22	1500Ω			
R23	3300Ω			
R24	27K			
R25	180Ω			
R26	1500Ω			
R27	3900Ω			
R28	1000Ω 5%			
R29	7500Ω 5%			
R30	5600Ω			
R31	10K			
R32	4700Ω			

ITEM No.	RATING	REPLACEMENT DATA		
		IRC PART No.	WORKMAN PART No.	REMARKS
R33	68K			
R34	1200Ω			
R35	10K			
R36	10K			
R37	3000Ω			
R38	27K			
R39	6800Ω			
R40	2700Ω			
R41	6800Ω			
R42	15K			
R43	3900Ω			(2700Ω) †
R44	360Ω			
R45	620Ω 5% 1W			
R46	9Ω Cold			#1086
R47	1Ω 3W			
R48	1Ω 3W			
R49	3600Ω 5%			
R50	510Ω 5%			
R51	51Ω 5%			
R52	120Ω			
R53	120Ω			
R54	120Ω			
R55	120Ω			
R56	150Ω			
R57	1000Ω			
R58	680Ω			

ITT Part Number.
† Alternate Value.

COILS (RF-IF)

ITEM No.	USE	REPLACEMENT DATA					NOTES
		ITT PART No.	Merit PART No.	Miller PART No.	Stancor PART No.	Workman PART No.	
L1	Ant.	1396					
L2	RF	1397					
L3	Receiver Osc.	1398					
L4	1.68MC IF	1399					
L5	1st 455KC IF	1400					
L6	2nd 455KC IF	1018					
L7	3rd 455KC IF	1019					
L8	RF Choke (50uh)	1424					
L9	Transmit Osc.	1425					
L10	Transmit Driver	1426					
L11	Final	1427					
L12	Ant. Load	1428					
L13	Ant. Load	1429					
L14	RF Choke (50uh)	1424					

FILTER CHOKE

ITEM No.	RATINGS			REPLACEMENT DATA					NOTES
	CURRENT (Measured)	DC RES.	INDUCTANCE (0 CURRENT 1000~)	ITT PART No.	MERIT PART No.	STANCOR PART No.	THORDARSON PART No.	TRIAD PART No.	
L15	.800A	.5Ω	175MH	1056					

TRANSFORMER (POWER)

ITEM No.	RATING			REPLACEMENT DATA					NOTES
	PRI.	SEC. 1	SEC. 2	ITT PART No.	MERIT PART No.	STANCOR PART No.	THORDARSON PART No.	TRIAD PART No.	
T1	117V ⓐ .105A (.172A)*	12V ⓐ .360A DC (.800A DC)*		1110					* Transmit

TRANSFORMER (DRIVER)

ITEM No.	TURNS RATIO		REPLACEMENT DATA					NOTES
	PRI.	SEC.	ITT PART No.	MERIT PART No.	STANCOR PART No.	THORDARSON PART No.	TRIAD PART No.	
T2	4	1	1020					

TRANSFORMER (AUDIO OUTPUT)

ITEM No.	IMPEDANCE		REPLACEMENT DATA					NOTES
	PRI.	SEC. 1	ITT PART No.	Merit PART No.	Stancor PART No.	Thordarson PART No.	Triad PART No.	
T3	100Ω CT	3-4Ω	1021					
		SEC. 2						
		25Ω CT						

SPEAKER

ITEM No.	TYPE			REPLACEMENT DATA		NOTES
	SIZE	FIELD	V. C. IMP.	ITT PART No.	QUAM PART No.	
SP1	2"x 6"	PM	3-4Ω	1025		

FUSES

ITEM No.	TYPE	RATING	REPLACEMENT DATA					
			ITT PART No.		LITTELFUSE PART No.		BUSS PART No.	
			FUSE	HOLDER	FUSE	HOLDER	FUSE	HOLDER
M1	3AG S/B	1/4A 125V 1A	1095 ① 1437 ②	101094	313.250	121004	MDL 1/4	4405

① AC Power Supply.
② DC Power Supply.

MISCELLANEOUS

ITEM No.	PART NAME	ITT PART No.	NOTES
M2	Crystal		Receive Specify Channel
M3	Crystal		Transmit Specify Channel
M4	Crystal	1116	2nd Converter (2.135MC)
M5	Switch	1028	Channel Selector (Rotary Type)
M6	Switch	1121	Polarity (2 Position Slide Type)
M7	Relay	1024	Receive-Transmit (185Ω, 12VDC)
	Microphone	1682	

WIRING DATA

General-use Hook-up Wire .... Use BELDEN No. 8530 (Solid) Available in 12 Colors
8524 (Stranded) Available in 12 Colors
Shielded Antenna Lead ..... Use BELDEN No. 8214 Lowest Loss (RG-8/U Type)
8237 Low Loss (RG-8/U)
8240 (Solid) Miniature (RG-58/U)
8259 (Stranded) Miniature (RG-58A/U)
Coiled Microphone Cable ..... Use BELDEN No. 8497 3 Conductor- 1 Shielded for Press-to-Talk (Neoprene)
8496 3 Conductor- 1 Shielded for Press-to-Talk (Vinyl)
Ignition Noise Suppression .... Use BELDEN No. 7300-Series Spark-Plug Sets
Bonding Strap ..... Use BELDEN No. 8661 (3/8 In.)

PHOTOFACT® Folder with CIRCUITRACE™

LAFAYETTE MODEL HE-29A

NOTICE

ONLY THOSE PERSONS PROPERLY LICENSED ARE PERMITTED TO MAKE REPAIRS OR ADJUSTMENTS WHICH MAY RESULT IN ILLEGAL OPERATION. (REFER TO FCC RULES & REGULATIONS PART 19, SUBPART D, SECTION 19.71.)

TRADE NAME	Lafayette Model HE-29A
SUPPLIER	Lafayette Radio, 165-08 Liberty Ave., Jamaica 33, N. Y.
TYPE SET	Battery Operated 9 Transistor Portable Citizens Band Transmitter-Receiver
POWER SUPPLY	12 Volts DC RATING Receive: 9MA@12 Volts DC (No Signal, Min. Volume) 14MA@12 Volts DC (Signal, Normal Volume) Transmit: 17MA@12 Volts DC
TUNING RANGE	Any One of Citizens Band Channels 1 thru 22

ALIGNMENT INSTRUCTIONS

ALIGNMENT INSTRUCTIONS—READ CAREFULLY BEFORE ATTEMPTING ALIGNMENT

Best results will be obtained when adjusting A5, A7 and A8 if the antenna normally used is connected and the unit is as nearly in the cabinet as possible.

Suggested Alignment Tools: A1, A2, A3... GENERAL CEMENT #5000, 5003, 5066, 8276, 8290, 9087, 9089
WALSCO #2512, 2525, 2528
A4 thru A8.. GENERAL CEMENT #8282, 8606, 8606-L, 9091
WALSCO #2526, 2541, 2542, 2543, 2544

RECEIVER ALIGNMENT

Connect DC VTVM across volume control.

	SIGNAL GENERATOR	CHANNEL	ADJUST	REMARKS
1.	Fashion loop of several turns of wire and radiate signal into loop of receiver. Tune to 455KC (Unmod.)	Any	A1, A2, A3	Adjust for maximum deflection.
2.	Fashion loop of several turns of wire and radiate signal into loop of receiver. Tune to channel frequency.	Highest Channel Used	A4	Adjust for maximum deflection. Rock A4 to each side of peak noting rate of dropoff. Set A4 just below peak on side of gradual dropoff.
3.	"	"	A5	Adjust for maximum deflection.

TRANSMITTER ALIGNMENT

ONLY THOSE PERSONS PROPERLY LICENSED ARE PERMITTED TO MAKE REPAIRS OR ADJUSTMENTS WHICH MAY RESULT IN ILLEGAL OPERATION. (REFER TO FCC RULES & REGULATIONS PART 19, SUBPART D, SECTION 19.71)

	SPECIAL INSTRUCTIONS	INDICATOR	ADJUST	REMARKS
1.	Connect dummy load or antenna to antenna receptacle.	Connect DC VTVM across R30.	A6	Key transmitter. Adjust A6 for maximum deflection. Rock A6 to each side of peak, noting rate of dropoff. Set A6 just below peak on side of gradual dropoff.
2.	"	"	A7	Key transmitter. Adjust A7 for MINIMUM deflection on VTVM and maximum indication of RF Wattmeter.
3.	"	RF Wattmeter or Field Strength Meter.	A8	Adjust for maximum indication.

LAFAYETTE MODEL HE-29A

HOWARD W. SAMS & CO., INC. Indianapolis 6, Indiana

LF644

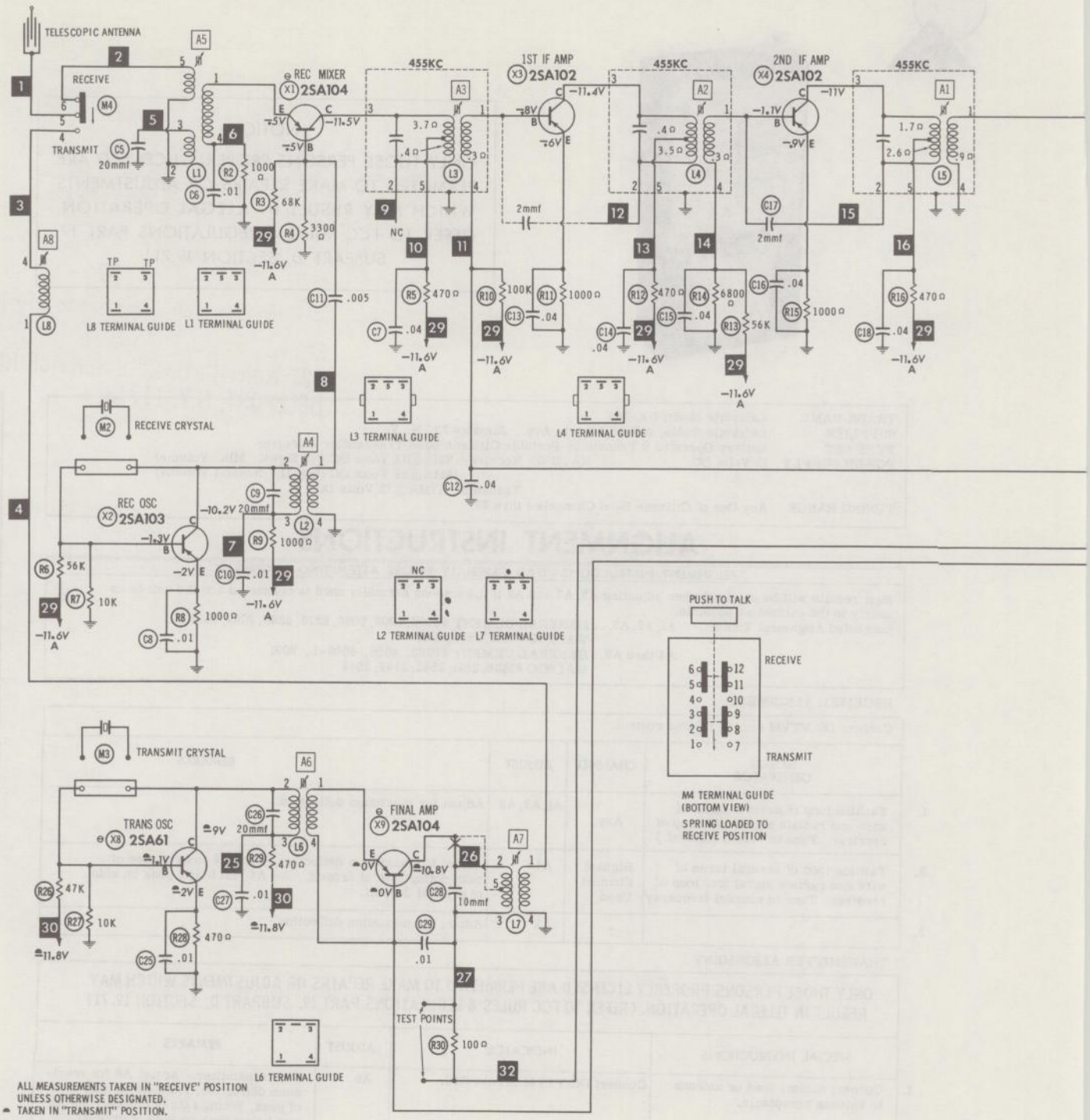

ALL MEASUREMENTS TAKEN IN "RECEIVE" POSITION UNLESS OTHERWISE DESIGNATED.
⊕ TAKEN IN "TRANSMIT" POSITION.

RESISTANCE MEASUREMENTS NOT GIVEN BECAUSE OF THE WIDE VARIATION IN INTERNAL TRANSISTOR RESISTANCE.

⊖ SEE PARTS LIST FOR ALTERNATE VALUE OR APPLICATION

1. DC voltage measurements taken with vacuum tube voltmeter.
2. Socket connections or transistor terminals are shown as bottom views.
3. Measured values are from socket pin or terminal to common ground.
4. Nominal tolerance on component values makes possible a variation of ±15% in voltage and resistance readings.
5. Volume control at maximum, no signal applied for voltage measurements.

A PHOTOFACT STANDARD NOTATION SCHEMATIC with CIRCUITRACE

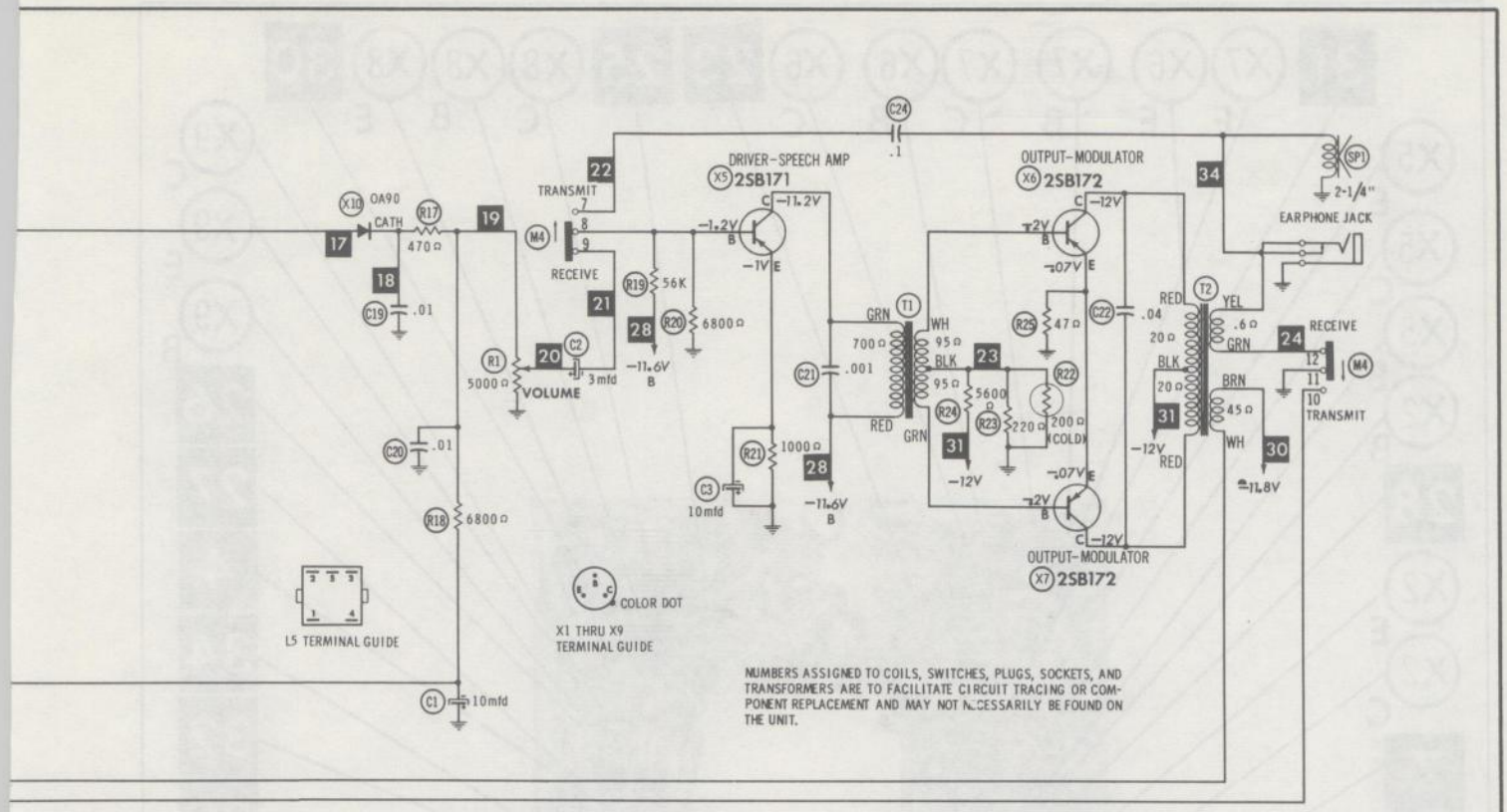

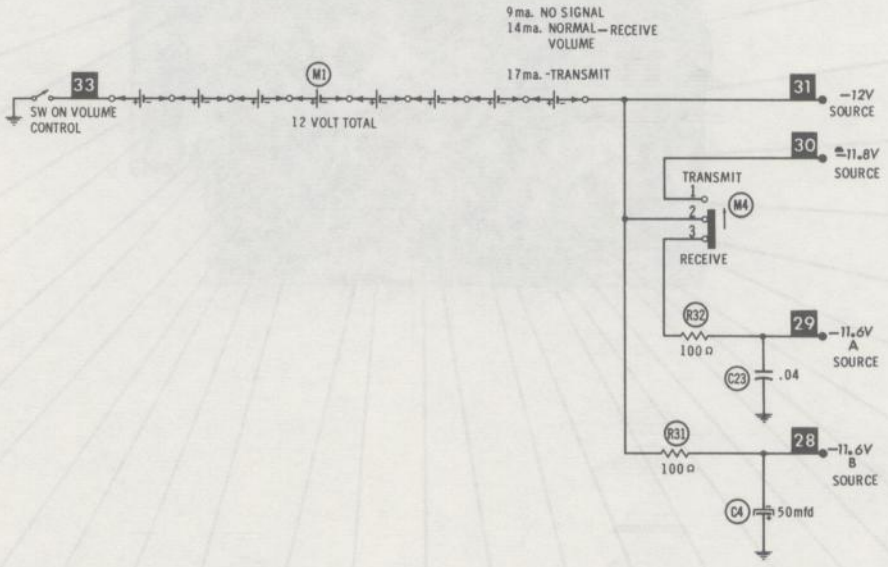

LAFAYETTE MODEL HE-29A

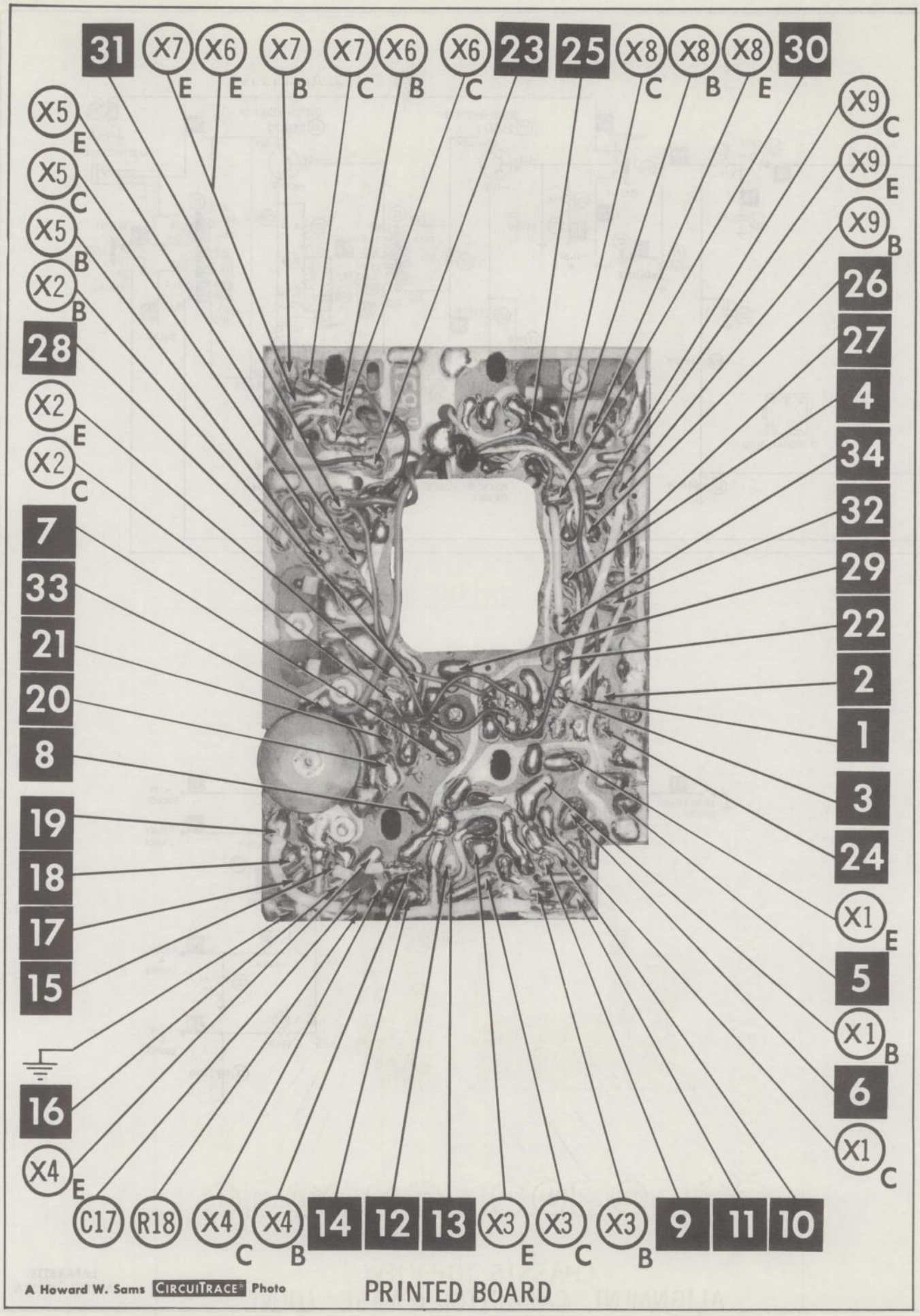

A Howard W. Sams CIRCUITRACE Photo

PRINTED BOARD

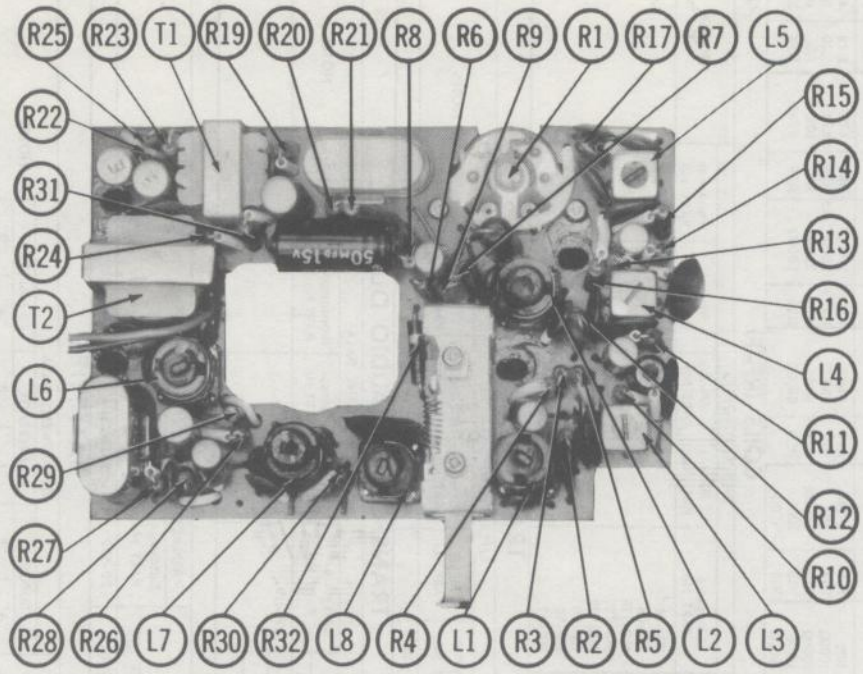

CHASSIS-TOP VIEW
RESISTOR & INDUCTOR IDENT.

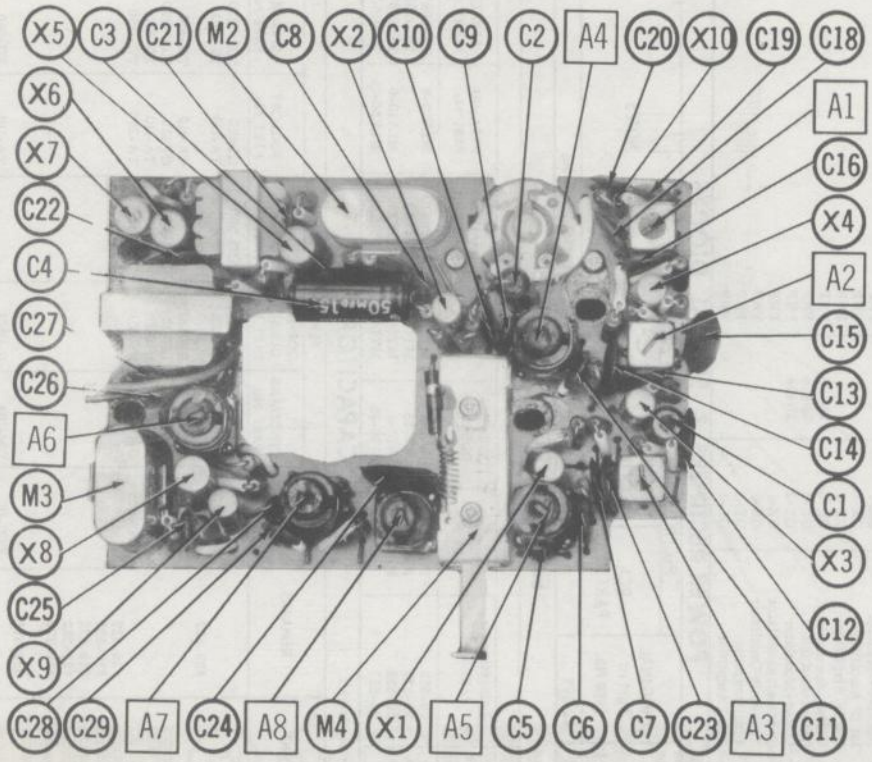

CHASSIS-TOP VIEW
ALIGNMENT, CAPACITOR & MISC. IDENT.

WIRING DATA

General-use Unshielded Hook-up Wire ..... Use BELDEN No.	8530 (Solid 22AWG) 8524 (Stranded 22AWG) 8570 (Stranded 26AWG)	Available in 12 Colors

PARTS LIST AND DESCRIPTIONS

TRANSISTORS

ITEM No.	ORIG. TYPE	USE	REPLACEMENT DATA: GENERAL ELECTRIC PART No.	REPLACEMENT DATA: RCA PART No.	NOTES
X1	2SA104	Receive Mixer	GE-1		PNP
	2SA61 †	Receive Mixer	GE-1		PNP
X2	2SA103	Receive Oscillator	GE-1		PNP
X3	2SA102	1st IF Amplifier	GE-1		PNP
X4	2SA102	2nd IF Amplifier	GE-1		PNP
X5	2SB171	Driver-Speech Amp.	GE-2	2N406	PNP
X6	2SB172	Output-Modulator	GE-2	2N408	PNP
X7	2SB172	Output-Modulator	GE-2	2N408	PNP
X8	2SA61	Transmit-Oscillator	GE-1		PNP
	2SA104 †	Transmit-Oscillator	GE-1		PNP
X9	2SA104	Final Amplifier	GE-1		PNP
	2SA61 †	Final Amplifier	GE-1		PNP

† Alternate Type

POWER RECTIFIERS & SIGNAL DIODES

ITEM No.	CURRENT RATING (Measured)	ORIGINAL Part or Type No.	RECTIFIERS: RCA PART No.	RECTIFIERS: SARKES TARZIAN PART No.	DIODES	NOTES
X10		29-505				Detector (OA90)

ELECTROLYTIC CAPACITORS

ITEM No.	RATING: CAP.	RATING: VOLT.	Lafayette PART No.	AEROVOX PART No.	CORNELL-DUBILIER PART No.	GENERAL ELECTRIC PART No.	MALLORY PART No.	PYRAMID PART No.	SPRAGUE PART No.
C1	10	6 *	29-525	PTT23	NLW10-6	MT1-5	TT6X10	MLV10-6	TE-1087
C2	3	3 *	29-523	PTT3	NLW3-25	MT1-3	TT6X3		TE-1052
C3	10	6 *	29-526	PTT23	NLW10-6	MT1-5	TT6X10	MLV10-6	TE-1087
C4	50	15	29-527		NLW50-15	MT1-16	TT15X50	MLV50-15	TE-1160

* May be 3 or 6 volt unit.

FIXED CAPACITORS

ITEM No.	RATING	REMARKS	AEROVOX PART No.	CENTRALAB PART No.	CORNELL-DUBILIER PART No.	ELMENCO PART No.	MALLORY PART No.	SPRAGUE PART No.
C5	20			DD-200	L10Q2	CCD-200	GP420	5GA-Q20
C6	.01		TTD-01	DM-103	H-05S1		TA-110	TG-S10
C7	.04	#29-522						
C8	.01		TTD-01	DM-103	H-05S1		TA-110	TG-S10
C9	20			DD-200	L10Q2	CCD-200	GP420	5GA-Q20
C10	.01		TTD-01	DM-103	H-05S1		TA-110	TG-S10
C11	.005		TTD-005	DM-502	H-05D5	CCD-502	TA-250	TG-D50
C12	.04	#29-522						
C13	.04	#29-522						
C14	.04	#29-522						
C15	.04	#29-522						
C16	.04	#29-522						
C17	2							
C18	.04	#29-522						
C19	.01		TTD-01	DM-103	H-05S1		TA-110	TG-S10
C20	.01		TTD-01	DM-103	H-05S1		TA-110	TG-S10
C21	.001			DM-102	H-05D1	CCD-102	GP-210	5GA-D10
C22	.04	#29-522						
C23	.04	#29-522						
C24	.1		TTD-1	DA-104	H-05P1			
C25	.01		TTD-01	DM-103	H-05S1		TA-110	TG-S10
C26	20			DD-200	L10Q2	CCD-200	GP420	5GA-Q20
C27	.01		TTD-01	DM-103	H-05S1		TA-110	TG-S10
C28	10			DD-100	L10Q1	CCD-100	GP410	5GA-Q10
C29	.01		TTD-01	DM-103	H-05S1		TA-110	TG-S10

\# Lafayette Part Number.

CONTROLS

All wattages 1/2 watt, or less, unless otherwise listed.

ITEM No.	USE	RESISTANCE	REPLACEMENT DATA: Lafayette PART No.	CENTRALAB PART No.	CLAROSTAT PART No.	CTS-IRC PART No.	MALLORY PART No.
R1	Volume & Switch	5000Ω	29-512				

RESISTORS (IRC, WORKMAN OR EQUIVALENT)

All wattages 1/2 watt, or less, unless otherwise listed.

ITEM No.	RATING	ITEM No.	RATING	ITEM No.	RATING	ITEM No.	RATING	ITEM No.	RATING	ITEM No.	RATING	ITEM No.	RATING
R2	1000Ω	R7	10K	R12	470Ω	R17	470Ω	R21	1000Ω	R25	47Ω	R29	470Ω
R3	68K	R8	1000Ω	R13	56K	R18	6800Ω	R22 #	200Ω Cold	R26	47K	R30	100Ω
R4	3300Ω	R9	1000Ω	R14	6800Ω	R19	56K	R23	220Ω	R27	10K	R31	100Ω
R5	470Ω	R10	100K	R15	1000Ω	R20	6800Ω	R24	5600Ω	R28	470Ω	R32	100Ω
R6	56K	R11	1000Ω	R16	470Ω								

\# Lafayette Part #MT-25

COILS (RF-IF)

ITEM No.	USE	REPLACEMENT DATA: Lafayette PART No.	Merit PART No.	Miller PART No.	Stancor PART No.	Workman PART No.	NOTES
L1	Antenna	HP-66					
L2	Receive Osc.	HP-68					
L3	1st IF	MS-776					
L4	2nd IF	MS-777					
L5	3rd IF	MS-778					
L6	Trans. Osc.	HP-69					
L7	Final	HP-70					
L8	Ant. Load	HP-67					

TRANSFORMER (DRIVER)

ITEM No.	TURNS RATIO: PRI.	TURNS RATIO: SEC.	REPLACEMENT DATA: Lafayette PART No.	MERIT PART No.	STANCOR PART No.	THORDARSON PART No.	TRIAD PART No.	NOTES
T1	1.6	1	TR-118					

TRANSFORMER (AUDIO OUTPUT)

ITEM No.	IMPEDANCE: PRI.	IMPEDANCE: SEC. 1	SEC. 2	REPLACEMENT DATA: Lafayette PART No.	Merit PART No.	Stancor PART No.	Thordarson PART No.	Triad PART No.	NOTES
T2	500Ω CT	6-8Ω	200Ω	TR-119					

SPEAKER

ITEM No.	TYPE: SIZE	TYPE: FIELD	TYPE: V. C. IMP.	REPLACEMENT DATA: Lafayette PART No.	QUAM PART No.	NOTES
SP1	2 1/4"	PM	6-8Ω	29-539	22A06Z8	

BATTERIES

ITEM No.	VOLTAGE	Lafayette PART No.	REPLACEMENT DATA: BURGESS "A"	BURGESS "B"	EVEREADY "A"	EVEREADY "B"	MALLORY "A"	MALLORY "B"	NOTES
M1	1½V	BA-155		930		1015		M-15R	8 Required

MISCELLANEOUS

ITEM No.	PART NAME	Lafayette PART No.	NOTES
M2	Crystal		Receive } Specify Channel
M3	Crystal		Transmit } Specify Channel
M4	Switch	SW-102	Receive-Transmit (Spring Loaded, Slide Type, Normally in Receive Position)
	Antenna	F-703	Telescoping

PHOTOFACT® Folder

La SALLE
MODELS LA101, LA101-A

MODEL LA-101-A

TRADE NAME	LaSalle Models LA-101, LA-101-A
MANUFACTURER	Biggs Electronics, Inc., 1328 Pulaski Street, Peru, Illinois
TYPE SET	AC-Battery Operated 10 Tube 5 Channel Transmitter-Receiver
POWER SUPPLY	105 – 125 Volts AC (or) 6 Volt Storage Battery (or) 12 Volt Storage Battery
RATING	57 Watts, .56 Amp. @117 Volts AC (Receive); 75 Watts, .7 Amp. @117 Volts AC (Transmit) 3.8 Amp. @12.6 Volts DC (Receive); 6.2 Amp. @12.6 Volts (Transmit)
TUNING RANGE	Any 5 of Citizens Band Channels 1 thru 22

La SALLE
MODELS LA101, LA101-A

NOTICE

ONLY THOSE PERSONS PROPERLY LICENSED ARE PERMITTED TO MAKE REPAIRS OR ADJUSTMENTS WHICH MAY RESULT IN ILLEGAL OPERATION. (REFER TO FCC RULES & REGULATIONS PART 19, SUBPART D, SECTION 19.71)

HOWARD W. SAMS & CO., INC. Indianapolis 6, Indiana

LY782

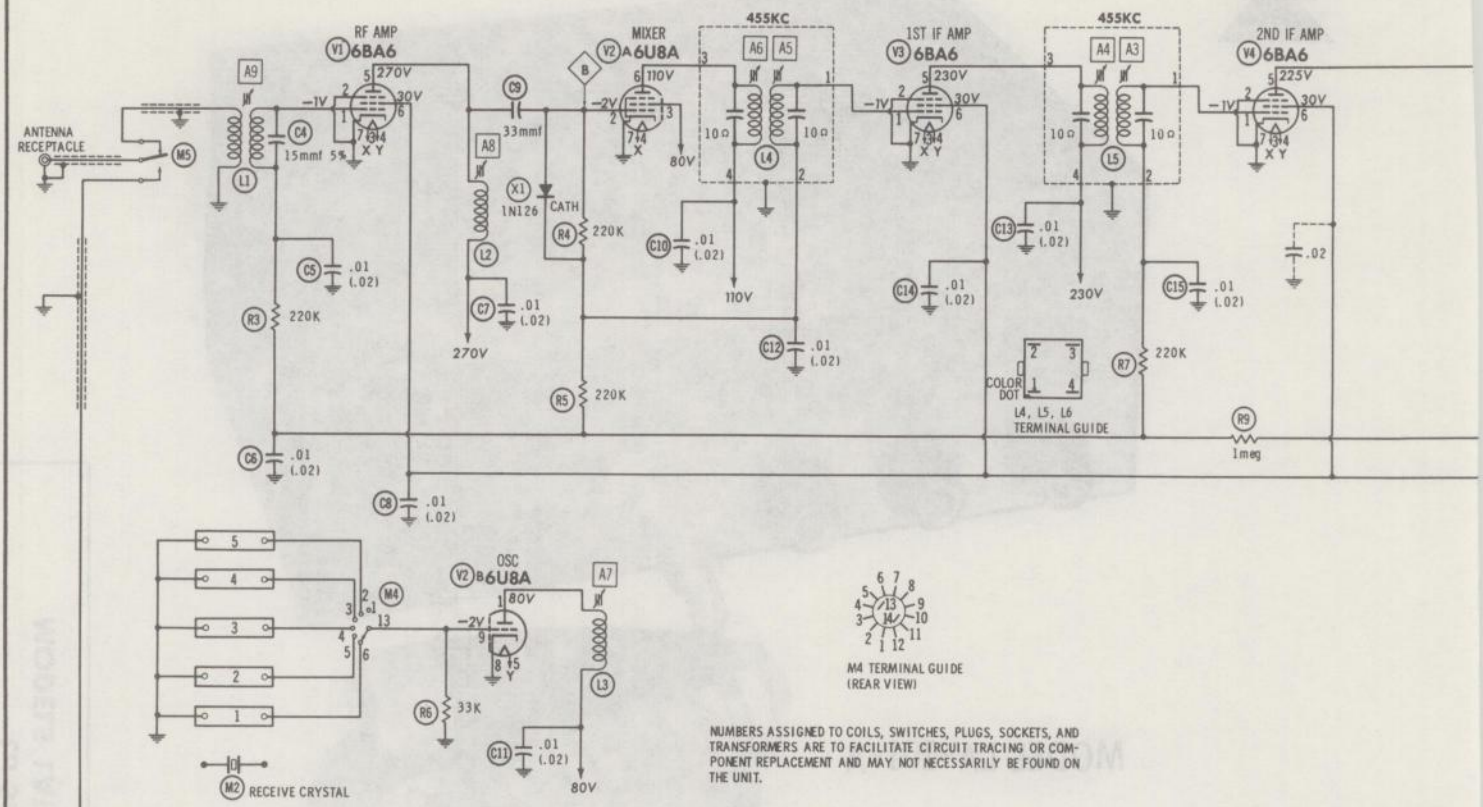

RESISTANCE READINGS

ITEM	TUBE	Pin 1	Pin 2	Pin 3	Pin 4	Pin 5	Pin 6	Pin 7	Pin 8	Pin 9
V1	6BA6	1.9meg	0Ω	FIL	FIL	†15K	†235K	0Ω		
V2	6U8A	†48K	2.1meg	†48K	FIL	FIL	†100K	0Ω	0Ω	33K
V3	6BA6	1.9meg	0Ω	FIL	FIL	†33K	†235K	0Ω		
V4	6BA6	1.9meg	0Ω	FIL	FIL	†36K	†235K	0Ω		
V5	6AL5	0Ω	470K	FIL	FIL	2.7meg	0Ω	690K		
V6	12AX7	†250K	†2.2meg	750K	FIL	FIL	†250K	1meg	0Ω	0Ω
V7	6AQ5A	470K	330Ω	FIL	FIL	†300Ω	†33K	470K		
V8	12AU7A	†320K	4.7meg	†19K	FIL	FIL	†250K	4.7meg	†19K	FIL
V9	6CX8	†19K	2200Ω	†33K	FIL	FIL	†19K	33K	†33K	†0Ω
V10	6X4	†100Ω	TP	FIL	FIL	TP	†100Ω	¶		

ALL MEASUREMENTS TAKEN IN "RECEIVE" POSITION UNLESS OTHERWISE DESIGNATED. TP TIE POINT
† MEASURED FROM PIN 7 OF V10. VOLUME CONTROL SET AT MINIMUM, SQUELCH CONTROL SET AT NORMAL OPERATION.
¶ THIS READING WILL VARY DEPENDING UPON THE CONDITION OF THE ELECTROLYTIC IN THE CIRCUIT.

◆ TAKEN IN "TRANSMIT" POSITION.

● SEE PARTS LIST FOR ALTERNATE VALUE OR APPLICATION

1. DC voltage measurements taken with vacuum tube voltmeter; AC voltages measured with 1000 ohm per volt voltmeter.
2. Socket connections are shown as bottom views.
3. Measured values are from socket pin to common ground.
4. Line voltage maintained at 117 volts for voltage readings.
5. Nominal tolerance on component values makes possible a variation of ±15% in voltage and resistance readings.
6. Volume control at maximum, no signal applied for voltage measurements.

A PHOTOFACT STANDARD NOTATION SCHEMATIC

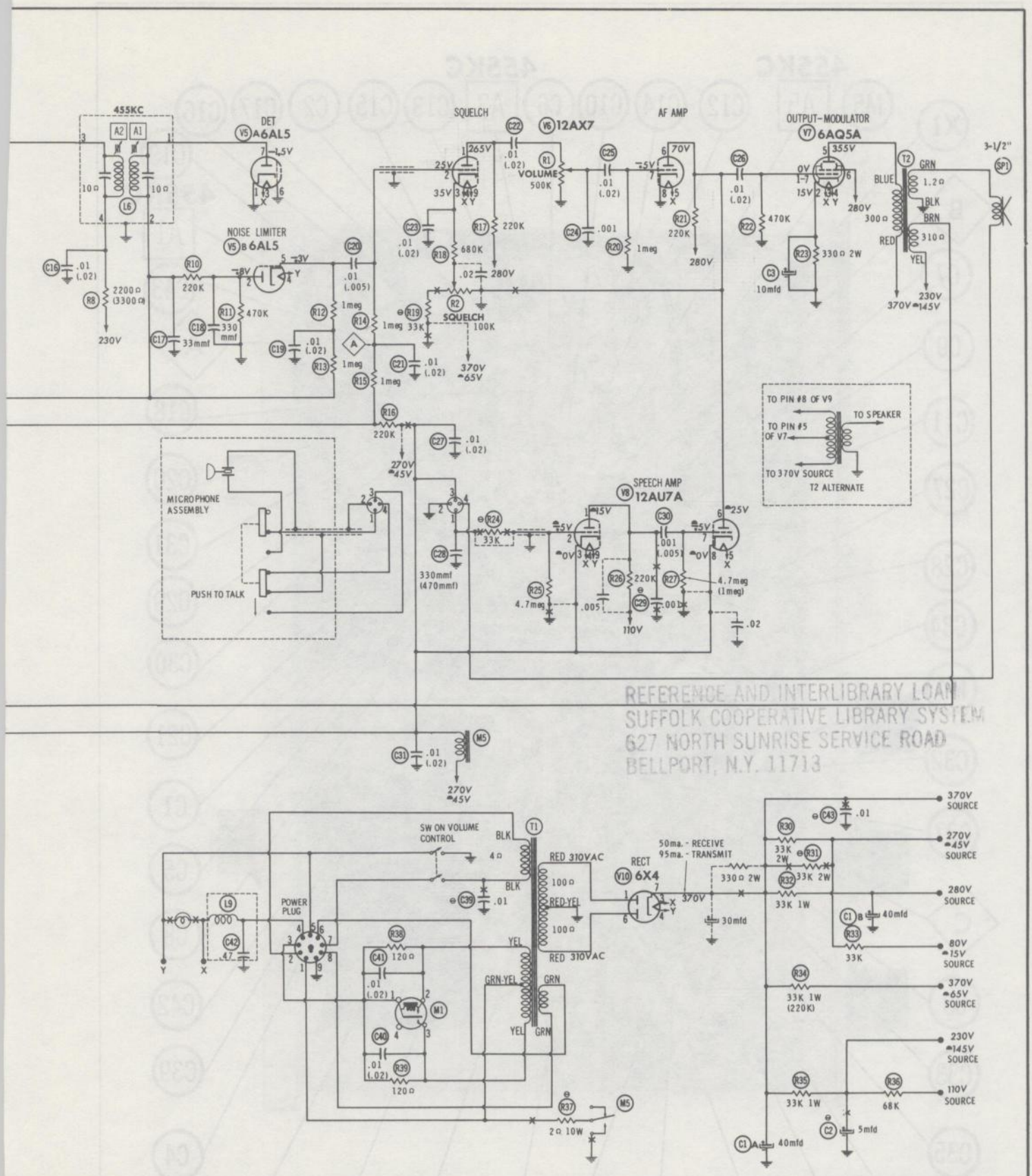

La SALLE
MODELS LA101, LA101-A

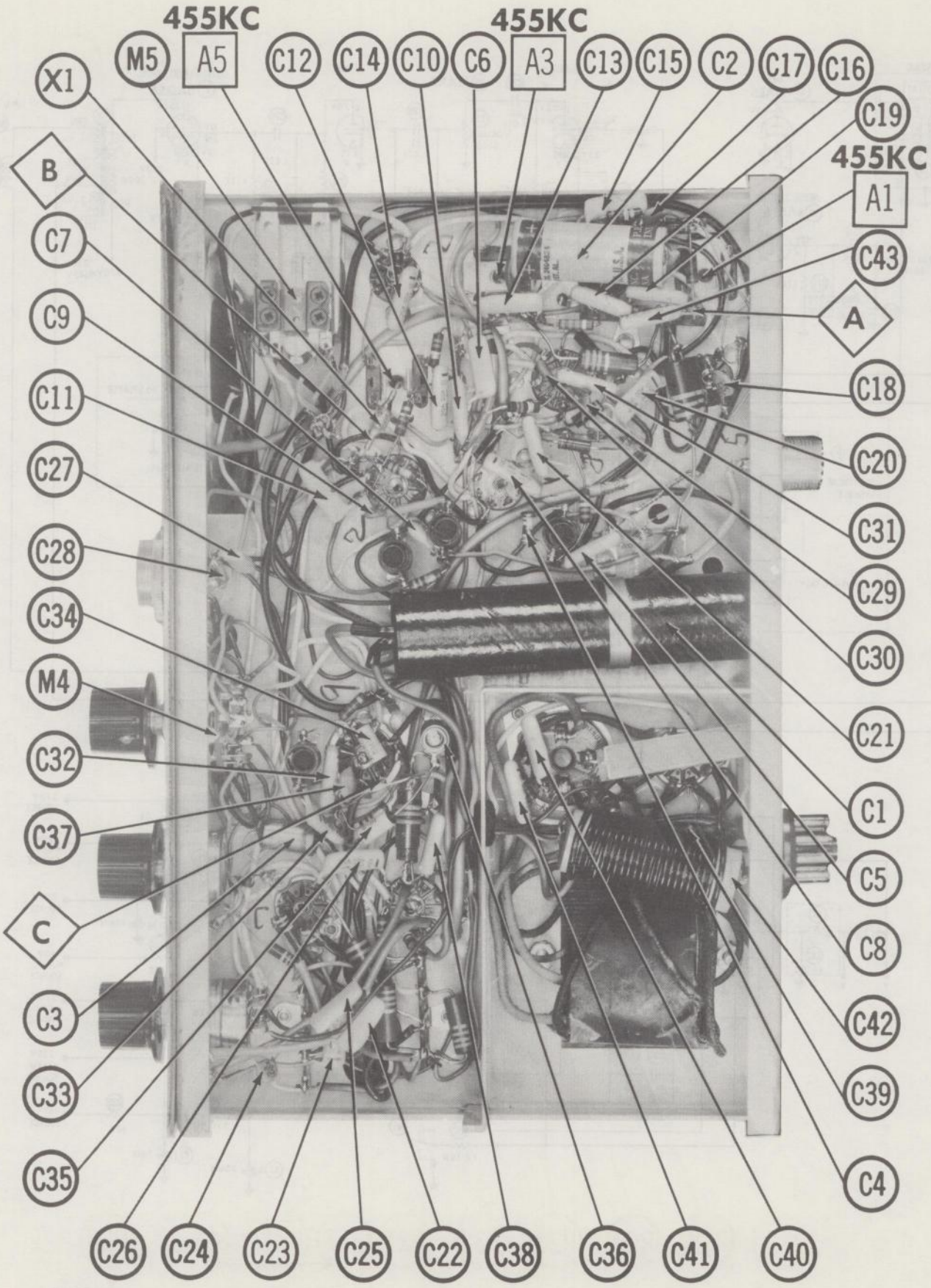

CHASSIS BOTTOM VIEW – ALIGNMENT, CAPACITOR & MISC. IDENT.

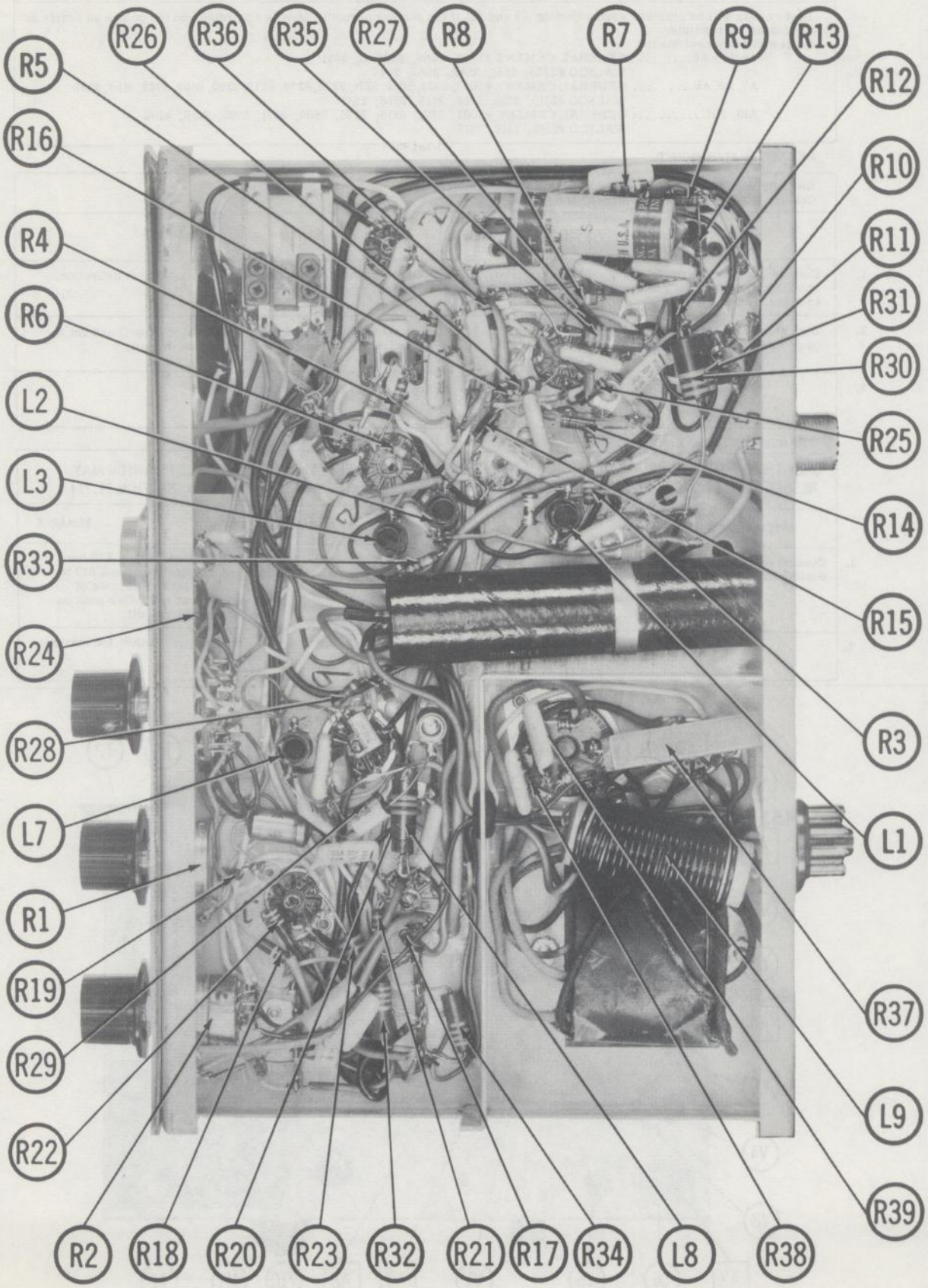

CHASSIS BOTTOM VIEW – RESISTOR & INDUCTOR IDENT.

ALIGNMENT INSTRUCTIONS

ALIGNMENT INSTRUCTIONS—READ CAREFULLY BEFORE ATTEMPTING ALIGNMENT

Best results will be obtained when adjusting A9 and A11 if the antenna normally used is connected and the unit is as nearly in the cabinet as possible.

Suggested Alignment Tools:

A1 thru A6..... GENERAL CEMENT #8282, 8606, 8606-L, 9091
WALSCO #2526, 2541, 2542, 2543, 2544

A7, A8, A9..... GENERAL CEMENT #5000, 5003, 5066, 8271, 8272, 8276, 8277, 8290, 8609, 8722, 9150, 9298
WALSCO #2515, 2516, 2518, 2519, 2525, 2541

A10, A11..... GENERAL CEMENT #5003, 8271, 8275, 8276, 8609, 8721, 8722, 9150, 9298
WALSCO #2516, 2518, 2519

RECEIVER ALIGNMENT

Use only enough generator output to provide a usable indication.
Connect DC VTVM between Point Ⓐ and ground.

	SIGNAL GENERATOR	CHANNEL	ADJUST	REMARKS
1.	Connect generator thru .05mfd to Pin 2 (grid) of V2. Set generator to 455KC (unmod.).	Not Used	A1, A2, A3, A4, A5, A6	Remove Receiver crystals. Adjust for maximum deflection. Reinsert crystals.
2.	High side to antenna input, common to ground. Tune to channel Freq.	Highest Channel Used.	A7	Rock A7 to each side of peak. Not rate of dropoff and set to point just below peak on side of gradual dropoff.
3.	"	Center Channel Freq.	A8, A9	Adjust for maximum deflection.

TRANSMITTER ALIGNMENT

ONLY THOSE PERSONS PROPERLY LICENSED ARE PERMITTED TO MAKE REPAIRS OR ADJUSTMENTS WHICH MAY RESULT IN ILLEGAL OPERATION. (REFER TO FCC RULES & REGULATIONS PART 19, SUBPART D, SECTION 19.71)

	SPECIAL INSTRUCTIONS	INDICATOR	ADJUST	REMARKS
1.	Connect antenna, RF Wattmeter or dummy load to antenna receptacle.	DC VTVM between Point Ⓑ and ground.	A10	Key transmitter. Adjust A10 for maximum deflection. Rock A10 to each side of peak. Note rate of dropoff and set just below peak on side of gradual dropoff.
2.	"	RF Wattmeter or field strength meter.	A11	Key transmitter. Adjust for maximum output.

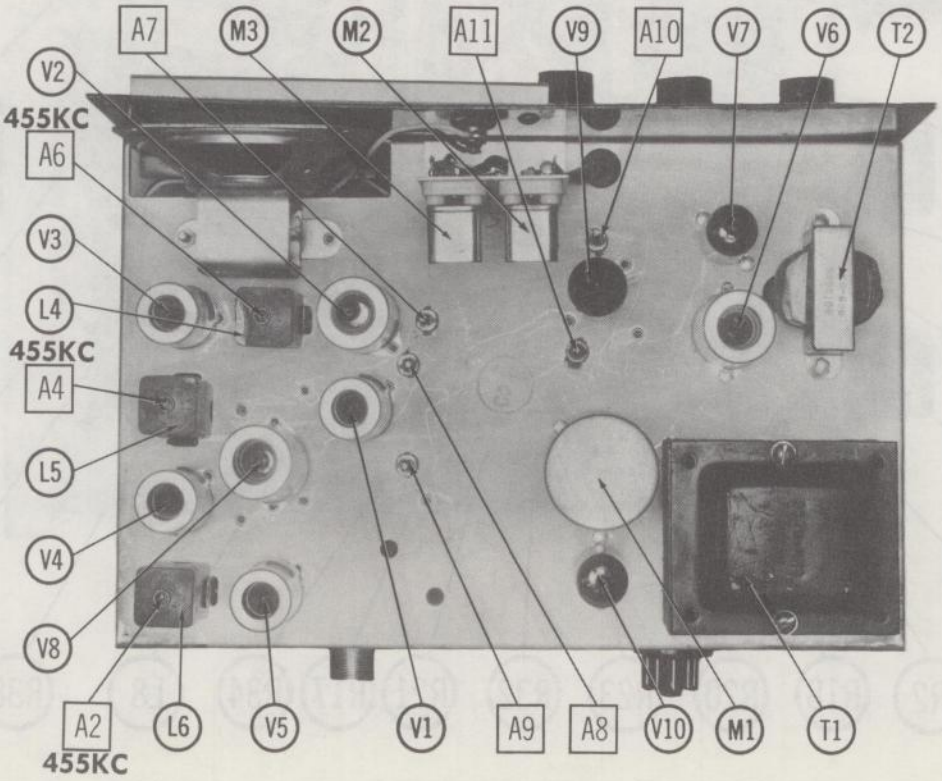

CHASSIS—TOP VIEW

PARTS LIST AND DESCRIPTIONS

WIRING DATA

General-use Hook-up Wire	Use BELDEN No.	8530 (Solid) Available in 12 Colors
		8524 (Stranded) Available in 12 Colors
Shielded Antenna Lead	Use BELDEN No.	8214 Lowest Loss (RG-8/U Type)
		8237 Low Loss (RG-8/U)
		8240 (Solid) Miniature (RG-58/U)
		8259 (Stranded) Miniature (RG-58A/U)
Coiled Microphone Cable	Use BELDEN No.	8497 3 Conductor- 1 Shielded for Press-to-Talk (Neoprene)
		8496 3 Conductor- 1 Shielded for Press-to-Talk (Vinyl)
Ignition Noise Suppression	Use BELDEN No.	7300-Series Spark-Plug Sets
Bonding Strap	Use BELDEN No.	8661 (3/8 In.)

TUBES

AMPEREX - GENERAL ELECTRIC - RAYTHEON - SYLVANIA

ITEM No.	USE	TYPE	ITEM No.	USE	TYPE
V1	RF Amplifier	6BA6	V6	Squelch-AF Amp.	12AX7
V2	Mixer-Osc.	6U8A	V7	Output-Modulator	6AQ5A
V3	1st IF Amplifier	6BA6	V8	Speech Amp.	12AU7A
V4	2nd IF Amplifier	6BA6	V9	Transmit Osc. -Final	6CX8
V5	Det. -Noise Limiter	6AL5	V10	Rectifier	6X4

* Alternate.

POWER RECTIFIERS & SIGNAL DIODES

ITEM No.	CURRENT RATING (Measured)	ORIGINAL Part or Type No.	RECTIFIERS RCA PART No.	RECTIFIERS SARKES TARZIAN PART No.	DIODES RAYTHEON PART No.	NOTES
X1		1N126			1N126	Overload

ELECTROLYTIC CAPACITORS

ITEM No.	RATING CAP.	RATING VOLT.	REPLACEMENT DATA La Salle PART No.	AEROVOX PART No.	CORNELL-DUBILIER PART No.	GENERAL ELECTRIC PART No.	MALLORY PART No.	PYRAMID PART No.	SPRAGUE PART No.
C1A	40	450	Note 1	PRS2420	BBRD4445	QT2-8	TCD78	TDLD-31	TVA-2740
B	40	450							
C2	5	450				QT1-4	TC70		
C3	10	25		PTT82	NLW10-25	MT1-5	TC22	MLV10-25	TE-1204

Note 1. Not used in some versions.

FIXED CAPACITORS

ITEM No.	RATING	REMARKS	AEROVOX PART No.	CENTRALAB PART No.	CORNELL-DUBILIER PART No.	ELMENCO PART No.	MALLORY PART No.	SPRAGUE PART No.
C4	15 5%				22R5Q15	CM-20C-150		
C5	.01	(.02) †	P488N-01	D6-103	PM-4S1	4DP-1-103	GEM-411	4TM-S10
C6	.01	(.02) †	P488N-01	D6-103	PM-4S1	4DP-1-103	GEM-411	4TM-S10
C7	.01	(.02) †	P488N-01	D6-103	PM-4S1	4DP-1-103	GEM-411	4TM-S10
C8	.01	(.02) †	P488N-01	D6-103	PM-4S1	4DP-1-103	GEM-411	4TM-S10
C9	33		BPD-33	DD-330	L10Q33	CCD-330	GP433	5GA-Q33
C10	.01	(.02) †	P488N-01	D6-103	PM-4S1	4DP-1-103	GEM-411	4TM-S10
C11	.01	(.02) †	P488N-01	D6-103	PM-4S1	4DP-1-103	GEM-411	4TM-S10
C12	.01	(.02) †	P488N-01	D6-103	PM-4S1	4DP-1-103	GEM-411	4TM-S10
C13	.01	(.02) †	P488N-01	D6-103	PM-4S1	4DP-1-103	GEM-411	4TM-S10
C14	.01	(.02) †	P488N-01	D6-103	PM-4S1	4DP-1-103	GEM-411	4TM-S10
C15	.01	(.02) †	P488N-01	D6-103	PM-4S1	4DP-1-103	GEM-411	4TM-S10
C16	.01	(.02) †	P488N-01	D6-103	PM-4S1	4DP-1-103	GEM-411	4TM-S10
C17	33		BPD-33	DD-330	L10Q33	CCD-330	GP433	5GA-Q33
C18	330		BPD-330	DD-331	L10T33	CCD-331	GP333	5GA-T33
C19	.01	(.02) †	P488N-01	D6-103	PM-4S1	4DP-1-103	GEM-411	4TM-S10
C20	.01	(.005) †	P488N-01	D6-103	PM-4S1	4DP-1-103	GEM-411	4TM-S10
C21	.01	(.02) †	P488N-01	D6-103	PM-4S1	4DP-1-103	GEM-411	4TM-S10
C22	.01	(.02) †	P488N-01	D6-103	PM-4S1	4DP-1-103	GEM-411	4TM-S10
C23	.01	(.02) †	P488N-01	D6-103	PM-4S1	4DP-1-103	GEM-411	4TM-S10
C24	.001		BPD-001	DD-102	L10D1	CCD-102	GP210	5GA-D10
C25	.01	(.02) †	P488N-01	D6-103	PM-4S1	4DP-1-103	GEM-411	4TM-S10
C26	.01	(.02) †	P488N-01	D6-103	PM-4S1	4DP-1-103	GEM-411	4TM-S10
C27	.01	(:02) †	P488N-01	D6-103	PM-4S1	4DP-1-103	GEM-411	4TM-S10
C28	330	(470) †	BPD-330	DD-331	L10T33	CCD-331	GP333	5GA-T33
C29	.001	Note 1	BPD-001	DD-102	L10D1	CCD-102	GP210	5GA-D10
C30	.001	(.005) †	BPD-001	DD-102	L10D1	CCD-102	GP210	5GA-D10
C31	.01	(.02) †	P488N-01	D6-103	PM-4S1	4DP-1-103	GEM-411	4TM-S10
C32	.01	(.02) †	P488N-01	D6-103	PM-4S1	4DP-1-103	GEM-411	4TM-S10
C33	.01	(.02) †	P488N-01	D6-103	PM-4S1	4DP-1-103	GEM-411	4TM-S10
C34	5	(6.8) †	ADM-15-050		22R5V5	VCM-20-050		
C35	5	Note 1	ADM-15-050		22R5V5	VCM-20-050		
C36	1-11							
C37	330		BPD-330	DD-331	L10T33	CCD-331	GP333	5GA-T33
C38	.01	(.002) †	P488N-01	D6-103	PM-4S1	4DP-1-103	GEM-411	4TM-S10
C39	.01	Note 1	P488N-01	D6-103	PM-4S1	4DP-1-103	GEM-411	4TM-S10
C40	.01	(.02) †	P488N-01	D6-103	PM-4S1	4DP-1-103	GEM-411	4TM-S10
C41	.01	(.02) †	P488N-01	D6-103	PM-4S1	4DP-1-103	GEM-411	4TM-S10
C42	.47		P688N-47		PM-6P47	6DP-6-474	GEM-6047	6TP-P47
C43	.01	Note 1	P488N-01	D6-103	PM-4S1	4DP-1-103	GEM-411	4TM-S10

Note 1. Not used in some versions.
† Alternate Value

CONTROLS

All wattages 1/2 watt, or less, unless otherwise listed.

ITEM No.	USE	RESISTANCE	LaSalle PART No.	CENTRALAB PART No.	CLAROSTAT PART No.	CTS-IRC PART No.	MALLORY PART No.
R1	Volume & Switch	500K	(W7270)	AB-60, KR-1, AK-9 or (F2-500K, KR-1, SU204)	A47-500K, SWE-12, RS-3	(BU2, CF25, SS5, GC) *	U48, US-26, or (UA55A, US41, SL2500)
R2	Squelch	100K	(W7269)	B-40, or(AB-40, AK-9)	A47-100K-S, RS-3		U41 or (UA15A, SL2500)

* "SNAPTROL".

PARTS LIST AND DESCRIPTIONS (Continued)

RESISTORS

All wattages 1/2 watt, or less, unless otherwise listed.

ITEM No.	RATING	REPLACEMENT DATA		
		IRC PART No.	WORKMAN PART No.	REMARKS
R3	220K			
R4	220K			
R5	220K			
R6	33K			
R7	220K			
R8	2200Ω			(3300Ω) †
R9	1meg			
R10	220K			
R11	470K			
R12	1meg			
R13	1meg			
R14	1meg			
R15	1meg			
R16	220K			
R17	220K			
R18	680K			
R19	33K			Note 1
R20	1meg			
R21	220K			

ITEM No.	RATING	REPLACEMENT DATA		
		IRC PART No.	WORKMAN PART No.	REMARKS
R22	470K			
R23	330Ω 2W			
R24	33K			Note 1
R25	4.7meg			
R26	220K			
R27	4.7meg			(1meg) †
R28	2200Ω			(3300Ω) †
R29	33K			(3300Ω) †
R30	33K 2W			
R31	33K 2W			Note 1
R32	33K 1W			
R33	33K			
R34	33K 1W			(220K) †
R35	33K 1W			
R36	68K			
R37	2Ω 10W	10W-SQ-2	PW10-2	Note 1
R38	120Ω			
R39	120Ω			

Note 1. Not used in some versions.
† Alternate Value.

COILS (RF-IF)

ITEM No.	USE	REPLACEMENT DATA					NOTES
		LaSalle PART No.	Merit PART No.	Miller PART No.	Stancor PART No.	Workman PART No.	
L1	Receive Ant.						
L2	Receive RF		TV-118 ①	6171A ①	RTC-8609 ①	T216A	①Enlarge Mounting Hole
L3	Receive Osc.		TV-118 ①	6171A ①	RTC-8609 ①	T216A	
L4	1st IF		BC-352	12-C9	RTC-8636	T612	
L5	2nd IF		BC-353	12-C10	RTC-8637	T613	
L6	3rd IF		BC-353	12-C10	RTC-8637	T613	
L7	Trans. Osc.		TV-118 ①	6171A ①	RTC-8609 ①	T216A	
L8	Final						
L9	Hash Choke						

TRANSFORMER (POWER)

ITEM No.	RATING			REPLACEMENT DATA					NOTES
	PRI.	SEC. 1	SEC. 2	LaSalle PART No.	MERIT PART No.	STANCOR PART No.	THORDARSON PART No.	TRIAD PART No.	
T1	117V ⓐ .56A (.72A)* 12.6V ⓐ 3.8A (6.2A)*	620VCT ⓐ .050A (.095A)*	11V ⓐ 1.7A (2.7A)*						* Transmit
	SEC. 3								
	6.3V ⓐ 4.2A								

TRANSFORMER (AUDIO OUTPUT)

ITEM No.	IMPEDANCE		REPLACEMENT DATA					NOTES
	PRI.	SEC.	LaSalle PART No.	Merit PART No.	Stancor PART No.	Thordarson PART No.	Triad PART No.	
T2	6000Ω	3-4Ω						

SPEAKER

ITEM No.	TYPE			REPLACEMENT DATA		NOTES
	SIZE	FIELD	V. C. IMP.	LaSalle PART No.	QUAM PART No.	
SP1	3½"	PM	3-4Ω		3A07	

VIBRATOR

ITEM No.	TYPE	INPUT VOLTS	FRE-QUENCY	REPLACEMENT DATA				NOTES
				LaSalle PART No.	CORNELL-DUBILIER PART No.	MALLORY PART No.	RADIART PART No.	
M1	Interrupter	6V			5301	1601	5301	

MISCELLANEOUS

ITEM No.	PART NAME	LaSalle PART No.	NOTES
M2	Crystal		Receive — Specify Channel and Frequency Desired
M3	Crystal		Transmit
M4	Switch		Channel Selector
M5	Relay		Receive - Transmit

PHOTOFACT® Folder with CIRCUITRACE™

MAGNAVOX MODEL WT101

NOTICE

ONLY THOSE PERSONS PROPERLY LICENSED ARE PERMITTED TO MAKE ADJUSTMENTS OR REPAIRS WHICH MAY RESULT IN ILLEGAL OPERATION. (REFER TO FCC RULES & REGULATIONS PART 19, SUBPART D, SECTION 19.71).

TRADE NAME	Magnavox Model WT101
MANUFACTURER	The Magnavox Co., 2131 Bueter Road, Fort Wayne 4, Indiana
TYPE SET	Battery Operated 8 Transistor Single Band Portable Citizens Band Transmitter-Receiver
POWER SUPPLY	18 Volts DC RATING 12MA @ 18 Volts DC (Receive) 20MA @ 18 Volts DC (Transmit)
TUNING RANGE	Any One of Citizens Band Channels 1 thru 23

ALIGNMENT INSTRUCTIONS

ALIGNMENT INSTRUCTIONS—READ CAREFULLY BEFORE ATTEMPTING ALIGNMENT

Best results will be obtained when adjusting A6 and A7 if the antenna normally used is connected, and the unit is as nearly in the cabinet as possible.
Suggested Alignment Tools:
A1, A2, A3..... GENERAL CEMENT #8607, 9291, 9294
WALSCO #2520, 2522, 2523, 2524, 2534, 2537, 2538

RECEIVER ALIGNMENT

Connect VTVM across Volume Control.

	SIGNAL GENERATOR	CHANNEL	ADJUST	REMARKS
1.	Tune to 455KC (Unmod.). Fashion loop of several turns of wire and radiate signal into loop of receiver.	Unused Channel	A1, A2, A3	Adjust for maximum deflection.
2.	Tune to Crystal Frequency. Fashion loop of several turns of wire and radiate signal into loop of receiver.	Channel Frequency	A4	"

TRANSMITTER ALIGNMENT

ONLY THOSE PERSONS PROPERLY LICENSED ARE PERMITTED TO MAKE REPAIRS OR ADJUSTMENTS WHICH MAY RESULT IN ILLEGAL OPERATION. (REFER TO FCC RULES & REGULATIONS PART 19, SUBPART D, SECTION 19.71)

	SPECIAL INSTRUCTIONS	INDICATOR	ADJUST	REMARKS
3.	Connect suitable load to antenna receptacle.	DC VTVM between point Ⓐ and ground.	A5	Adjust for maximum deflection while rocking A5, Note rate of dropoff. Set just below peak on side of gradual dropoff.
4.	"	RF Wattmeter or field strength meter.	A6, A7	Adjust for maximum deflection. Repeat adjustments.

HOWARD W. SAMS & CO., INC. Indianapolis 6, Indiana

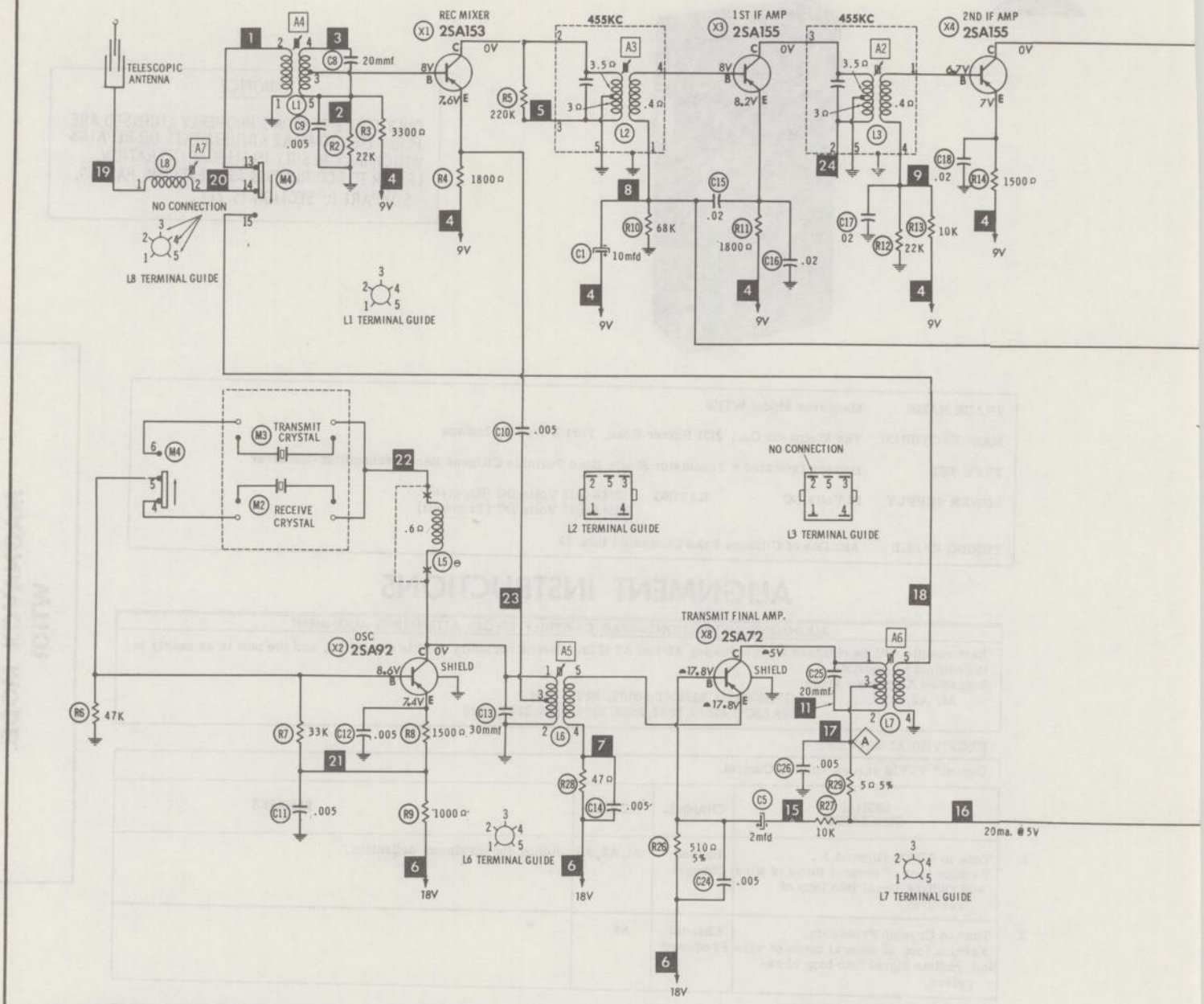

RESISTANCE MEASUREMENTS NOT GIVEN BECAUSE OF THE WIDE VARIATION IN INTERNAL TRANSISTOR RESISTANCE.

NUMBERS ASSIGNED TO COILS, SWITCHES, PLUGS, SOCKETS, AND TRANSFORMERS ARE TO FACILITATE CIRCUIT TRACING OR COMPONENT REPLACEMENT AND MAY NOT NECESSARILY BE FOUND ON THE UNIT.

☂ MEASURED IN TRANSMIT POSITION.

⊖ SEE PARTS LIST FOR ALTERNATE VALUE OR APPLICATION

1. DC voltage measurements taken with vacuum tube voltmeter.
2. Socket connections or transistor terminals are shown as bottom views.
3. Measured values are from socket pin or terminal to common ground.
4. Nominal tolerance on component values makes possible a variation of ±15% in voltage and resistance readings.
5. Volume control at maximum, no signal applied for voltage measurements.

A PHOTOFACT STANDARD NOTATION SCHEMATIC with CIRCUITRACE

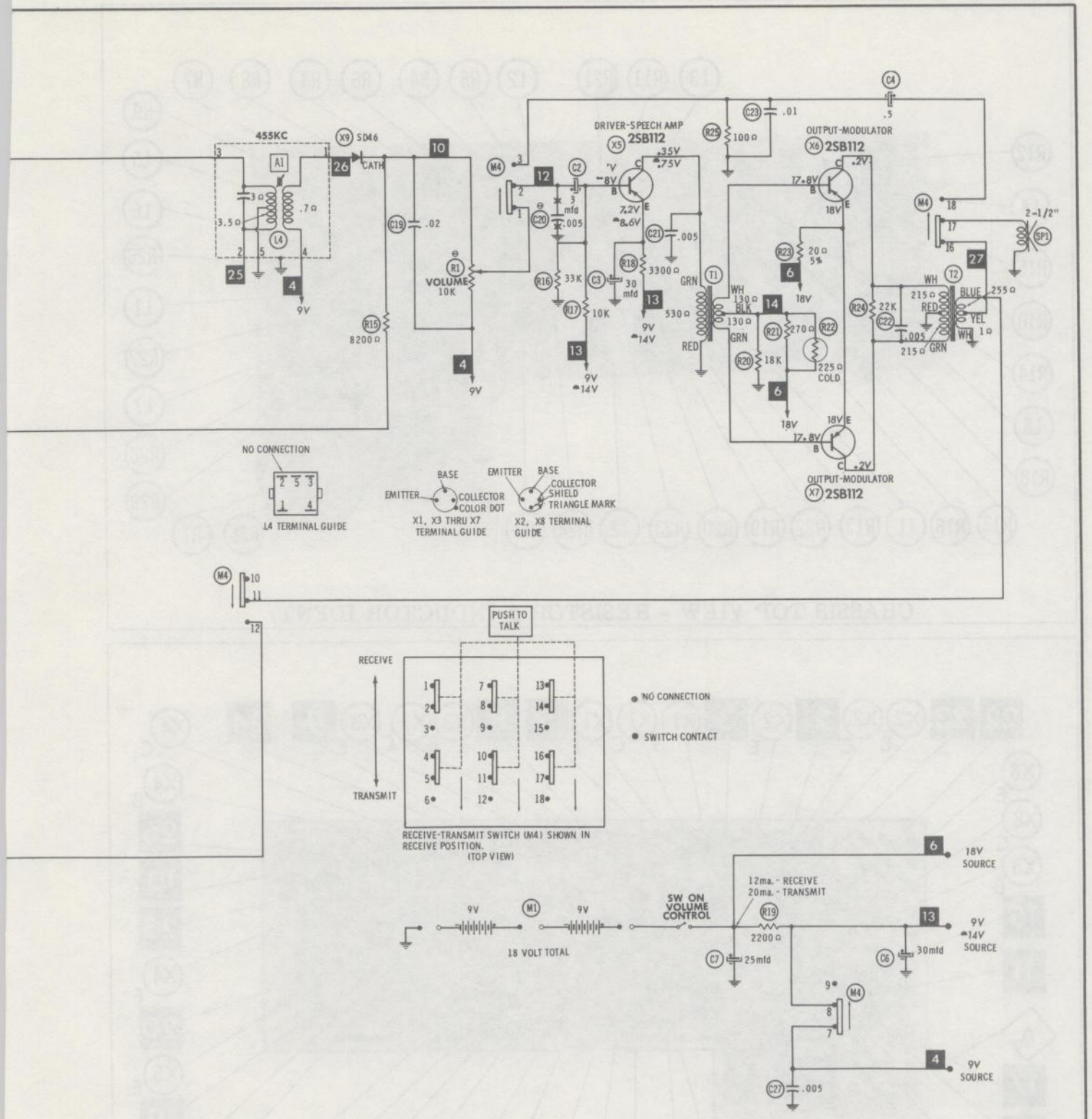

MAGNAVOX MODEL WT101

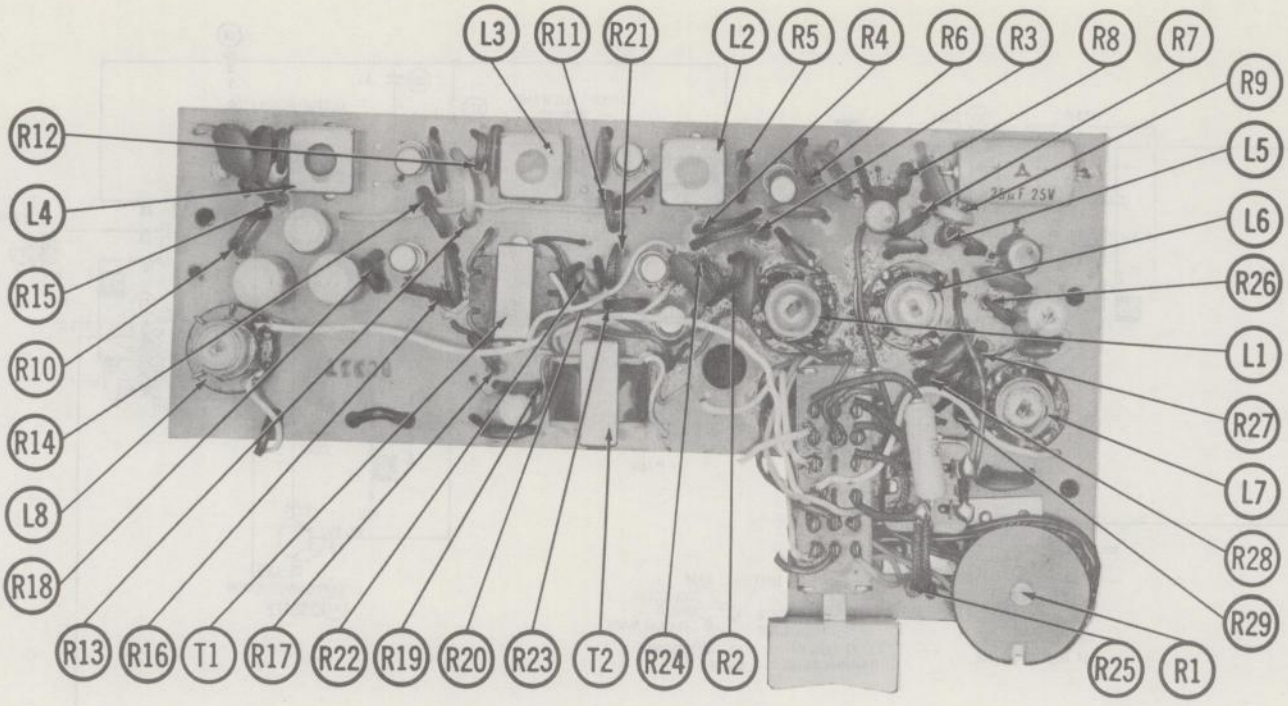

CHASSIS TOP VIEW - RESISTOR & INDUCTOR IDENT.

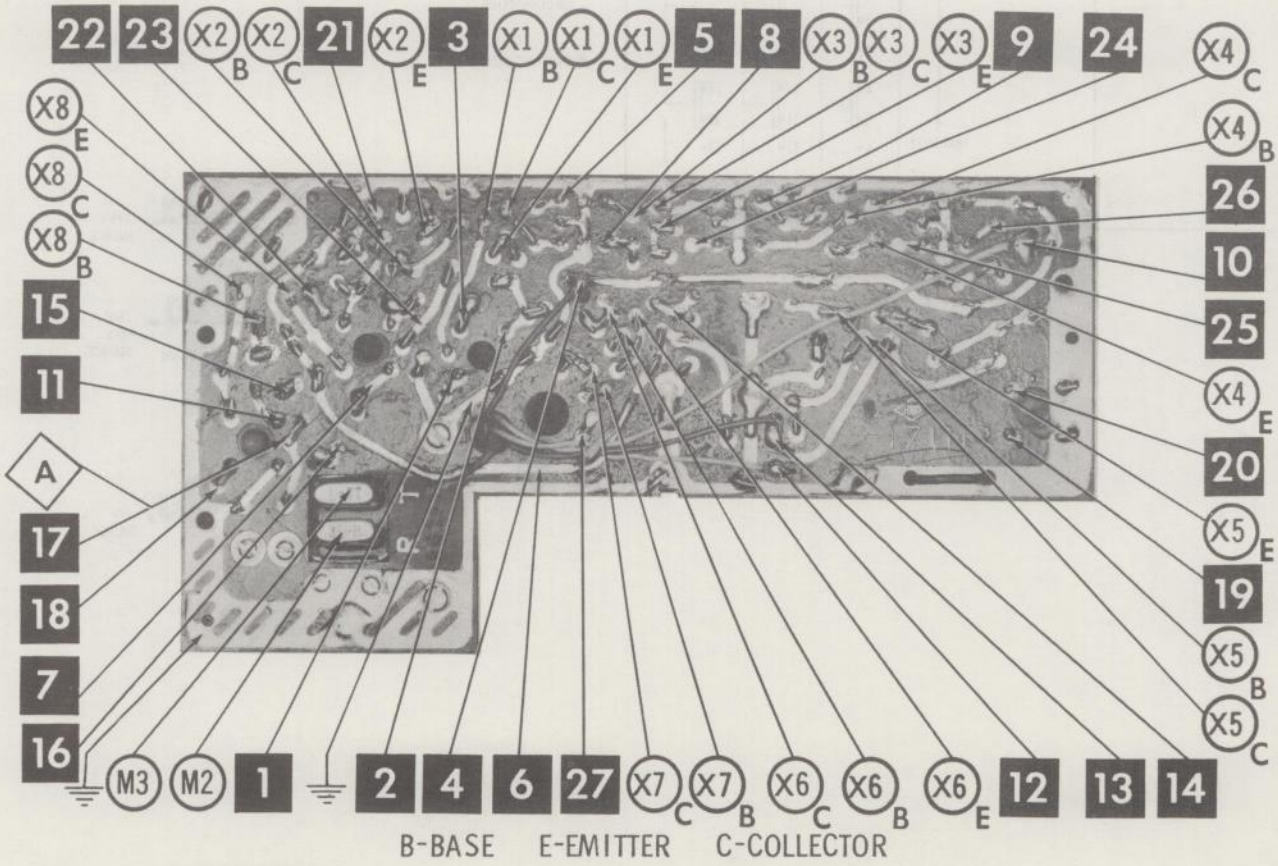

A Howard W. Sams CIRCUITRACE® Photo

CHASSIS - BOTTOM VIEW

PARTS LIST AND DESCRIPTIONS

TRANSISTORS

ITEM No.	ORIG. TYPE	USE	REPLACEMENT DATA: GENERAL ELECTRIC PART No.	RCA PART No.	RAYTHEON PART No.	NOTES
X1	2SA153	Rec. Mixer	GE-1		2N485	PNP
X2	2SA92	Oscillator	GE-1		2N481	PNP
X3	2SA155	1st IF Amplifier	GE-1	2N410	2N483	PNP
X4	2SA155	2nd IF Amplifier	GE-1	2N410	2N483	PNP
X5	2SB112	Driver-Speech Amp.	GE-2	2N406	2N362	PNP
X6	2SB112	Output-Modulator	GE-2	2N408	2N632	PNP
X7	2SB112	Output-Modulator	GE-2	2N408	2N632	PNP
X8	2SA74	Trans. Final	GE-2			PNP

POWER RECTIFIERS & SIGNAL DIODES

ITEM No.	CURRENT RATING (Measured)	ORIGINAL Part or Type No.	RECTIFIERS: RCA PART No.	RECTIFIERS: SARKES TARZIAN PART No.	DIODES: RAYTHEON PART No.	NOTES
X9		SD46			1N60	Detector

ELECTROLYTIC CAPACITORS

ITEM No.	RATING: CAP.	RATING: VOLT.	REPLACEMENT DATA: MAGNAVOX PART No.	AEROVOX PART No.	CORNELL-DUBILIER PART No.	GENERAL ELECTRIC PART No.	MALLORY PART No.	PYRAMID PART No.	SPRAGUE PART No.
C1	10	15	270062-2	BCD15010	ECPB408	MT1-5	TT15X10	MLV10-15	VL-1167
C2	3	15	270062-1	BCD15003	ECPB403	MT1-3	TT50X3	MLV5-15	VL-1162
C3	30	15	270062-3	BCD15035	ECPB412	MT1-16	TT15X30	MLV35-15	VL-1172
C4	.5	10	270046-2	PTT34	NLW1-50	MT1-1	TT12X1	MLV2-12	TE-1120
C5	2	25	270061-1	PTT75	NLW2-50	MT1-1	TT50X2	MLV2-50	TE-1201
C6	30	15	270062-3	BCD15035	ECPB412	MT1-16	TT15X30	MLV35-15	VL-1172
C7	25	25	270061-2	PTT82	NLW25-25	MT1-11	TT25X25	MLV25-25	TE-1207

FIXED CAPACITORS

ITEM No.	RATING	REMARKS	REPLACEMENT DATA: AEROVOX PART No.	CENTRALAB PART No.	CORNELL-DUBILIER PART No.	ELMENCO PART No.	MALLORY PART No.	SPRAGUE PART No.
C8	20		DI-20	DD-200	L10Q2	CCD-200	GP420	10TS-Q20
C9	.005		BPD-005	DM-502	H-05D5	CCD-502	TA-250	TG-D50
C10	.005		BPD-005	DM-502	H-05D5	CCD-502	TA-250	TG-D50
C11	.005		BPD-005	DM-502	H-05D5	CCD-502	TA-250	TG-D50
C12	.005		BPD-005	DM-502	H-05D5	CCD-502	TA-250	TG-D50
C13	30		DI-30	DD-300	L10Q3	CCD-300	GP430	10TS-Q30
C14	.005		BPD-005	DM-502	H-05D5	CCD-502	TA-250	TG-D50

FIXED CAPACITORS (cont)

ITEM No.	RATING	REMARKS	REPLACEMENT DATA: AEROVOX PART No.	CENTRALAB PART No.	CORNELL-DUBILIER PART No.	ELMENCO PART No.	MALLORY PART No.	SPRAGUE PART No.
C15	.02		C80V203AM	DDM-203	H-05S2		TA-120	TG-S20
C16	.02		C80V203AM	DDM-203	H-05S2		TA-120	TG-S20
C17	.02		C80V203AM	DDM-203	H-05S2		TA-120	TG-S20
C18	.02		C80V203AM	DDM-203	H-05S2		TA-120	TG-S20
C19	.02		C80V203AM	DDM-203	H-05S2		TA-120	TG-S20
C20	.005	Note 1	BPD-005	DM-502	H-05D5	CCD-502	TA-250	TG-D50
C21	.005		BPD-005	DM-502	H-05D5	CCD-502	TA-250	TG-D50
C22	.005		BPD-005	DM-502	H-05D5	CCD-502	TA-250	TG-D50
C23	.01		C80V103AM	DM-103	H-05S1	CCD-103	TA-110	TG-S10
C24	.005		BPD-005	DM-502	H-05D5	CCD-502	TA-250	TG-D50
C25	20		DI-20	DD-200	L10Q2	CCD-200	GP420	10TS-Q20
C26	.005		BPD-005	DM-502	H-05D5	CCD-502	TA-250	TG-D50
C27	.005		BPD-005	DM-502	H-05D5	CCD-502	TA-250	TG-D50

Note 1. Not used in some versions.

CONTROLS

All wattages 1/2 watt, or less, unless otherwise listed.

ITEM No.	USE	RESISTANCE	REPLACEMENT DATA: MAGNAVOX PART No.	CENTRALAB PART No.	CLAROSTAT PART No.	CTS-IRC PART No.	MALLORY PART No.
R1	Volume & Switch	10K	220180-1①				

① Some versions may use Part #220168-1.

RESISTORS

All wattages 1/2 watt, or less, unless otherwise listed.

ITEM No.	RATING	REPLACEMENT DATA: IRC PART No.	WORKMAN PART No.	REMARKS
R2	22K			
R3	3300Ω			
R4	1800Ω			
R5	220K			
R6	47K			
R7	33K			
R8	1500Ω			
R9	1000Ω			
R10	68K			
R11	1800Ω			
R12	22K			
R13	10K			
R14	1500Ω			
R15	8200Ω			

ITEM No.	RATING	REPLACEMENT DATA: IRC PART No.	WORKMAN PART No.	REMARKS
R16	33K			
R17	10K			
R18	3300Ω			
R19	2200Ω			
R20	18K			
R21	270Ω			
R22	225Ω Cold			#230132-1
R23	20Ω 5%			
R24	22K			
R25	100Ω			
R26	510Ω 5%			
R27	10K			
R28	47Ω			
R29	5Ω 5%			

PARTS LIST AND DESCRIPTIONS (Continued)

COILS (RF-IF)

ITEM No.	USE	REPLACEMENT DATA					NOTES
		MAGNAVOX PART No.	Merit PART No.	Miller PART No.	Stancor PART No.	Workman PART No.	
L1	Rec. Antenna	360932-1					
L2	1st IF	360934-1	BC-574				
L3	2nd IF	360934-1	BC-574				
L4	3rd IF		BC-576				
L5	RF						
L6	Osc.	360930-1					
L7	Final	360931-1					
L8	Antenna Load	360933-1					

TRANSFORMER (DRIVER)

ITEM No.	TURNS RATIO		REPLACEMENT DATA					NOTES
	PRI.	SEC.	MAGNAVOX PART No.	Merit PART No.	Stancor PART No.	Thordarson PART No.	Triad PART No.	
T1	1.5	1	320103-1					

TRANSFORMER (AUDIO OUTPUT)

ITEM No.	IMPEDANCE		REPLACEMENT DATA					NOTES
	PRI.	SEC.	MAGNAVOX PART No.	Merit PART No.	Stancor PART No.	Thordarson PART No.	Triad PART No.	
T2	12K	540Ω Tap @ 6-8Ω	320104-1					

SPEAKER

ITEM No.	TYPE			REPLACEMENT DATA		NOTES
	SIZE	FIELD	V. C. IMP.	MAGNAVOX PART No.	QUAM PART No.	
SP1	2½"	PM	6-8Ω	570013-1		

BATTERIES

ITEM No.	VOLTAGE	MAGNAVOX PART No.	REPLACEMENT DATA						NOTES
			BURGESS		EVEREADY		MALLORY		
			"A"	"B"	"A"	"B"	"A"	"B"	
M1	9V	530075-1		P6		226		M-1600	2 Required

MISCELLANEOUS

ITEM No.	PART NAME	MAGNAVOX PART No.	NOTES
M2	Crystal	530076-1	Receive } Specify Desired Channel
M3	Crystal	530077-1	Transmit } Specify Desired Channel
M4	Switch	160356-1	Receive-Transmit
	Antenna	461003-1	Telescoping

CABINETS & CABINET PARTS

(When Ordering Cabinets & Cabinet Parts, Specify Model, Chassis & Color)

NAME	PART NO.	DESCRIPTION
Knob, Volume	140565-1	
Cabinet Front	140566-1	
Cabinet Back	140567-1	

WIRING DATA

General-use Unshielded Hook-up Wire ..... Use BELDEN No. 8530 (Solid 22AWG), 8524 (Stranded 22AWG), 8570 (Stranded 26AWG) — Available in 12 Colors

CHASSIS—TOP VIEW

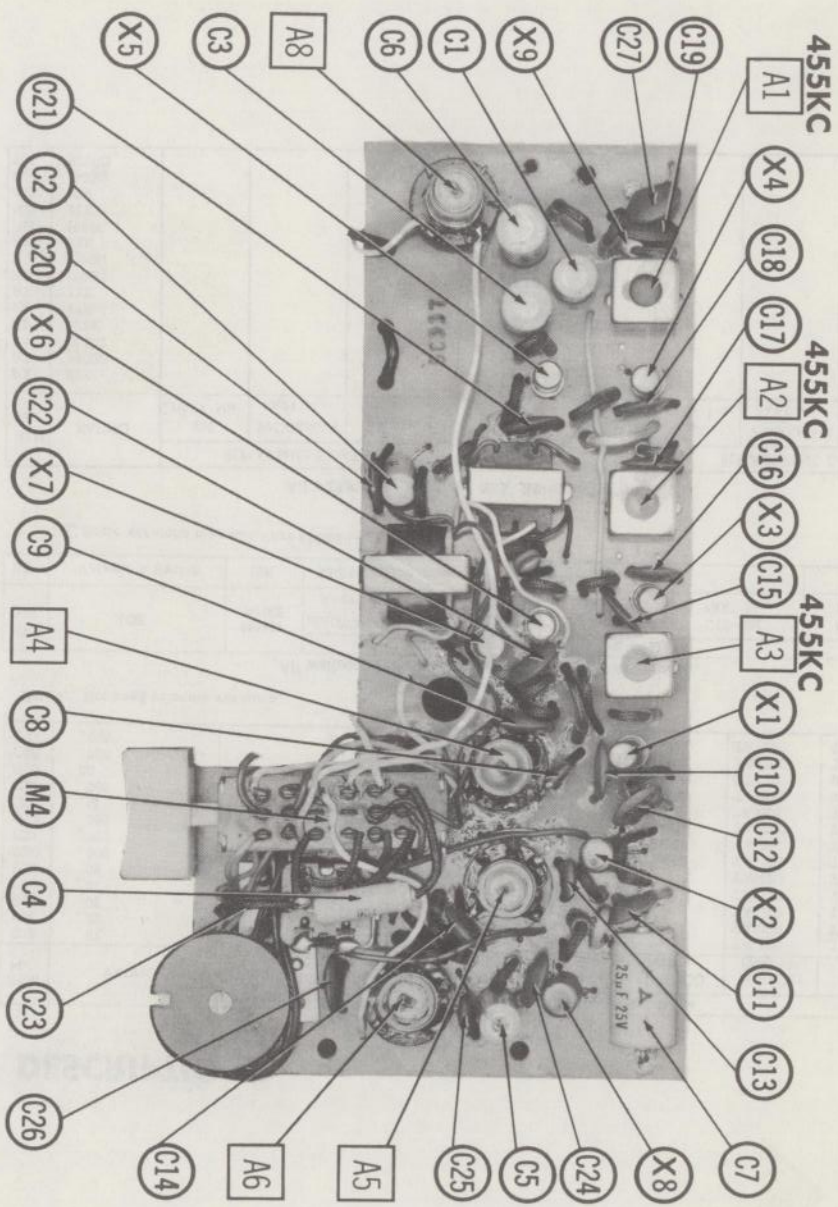

PHOTOFACT® Folder

PHILMORE MODELS CC-1/-1W, CPA-1/-1W, CPM-1/-1W, CT-1/-1W

MODEL
CC-1

MODEL
CPM-1

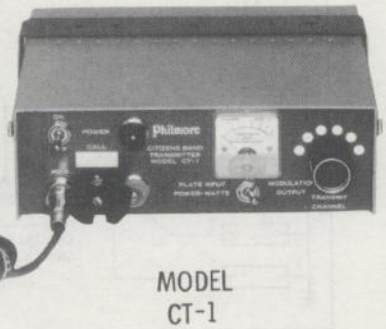

MODEL
CT-1

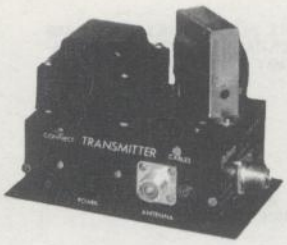

MODEL
CPA-1

TRADE NAME	Philmore	CC-1, CC-1W (2 Tube Citizens Band Converter) CT-1, CT-1W (3 Tube Citizens Band Transmitter) CPA-1, CPA-1W (AC Power Supply) CPM-1, CPM-1W (2 Transistor DC Power Supply)
MANUFACTURER	Philmore Manufacturing Co., Inc., 130-01 Jamaica Ave., Richmond Hill 18, N. Y.	
POWER SUPPLY	110 — 120 Volts AC, 60 Cycles (or) 12 Volt Storage Battery	
RATING	38 Watts, .48 Amp. @117 Volts AC (Receive) 3.2 Amp. @12.6 Volts DC (Receive) 60 Watts, .66 Amp. @117 Volts AC (Transmit) 4.5 Amp. @12.6 Volts DC (Transmit)	
FREQ. RANGE	Any one of Citizens Band Channels 1 thru 22	

NOTICE

ONLY THOSE PERSONS PROPERLY LICENSED ARE PERMITTED TO MAKE REPAIRS OR ADJUSTMENTS WHICH MAY RESULT IN ILLEGAL OPERATION. (REFER TO FCC RULES & REGULATIONS PART 19, SUBPART D, SECTION 19.71.)

PHILMORE MODELS CC-1/-1W, CPA-1/-1W, CPM-1/-1W, CT-1/-1W

HOWARD W. SAMS & CO., INC. Indianapolis 6, Indiana

LY746

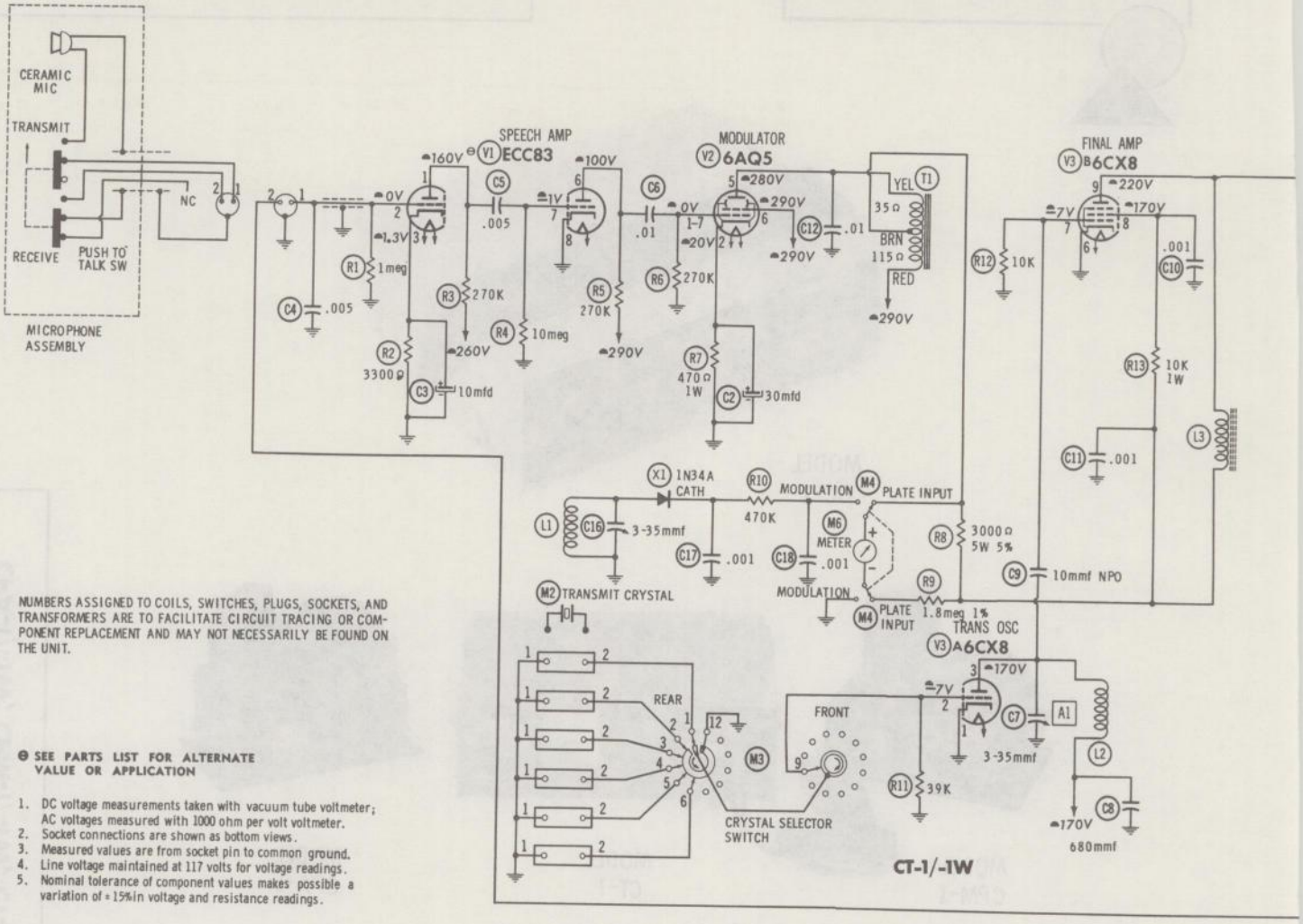

NUMBERS ASSIGNED TO COILS, SWITCHES, PLUGS, SOCKETS, AND TRANSFORMERS ARE TO FACILITATE CIRCUIT TRACING OR COMPONENT REPLACEMENT AND MAY NOT NECESSARILY BE FOUND ON THE UNIT.

⊖ SEE PARTS LIST FOR ALTERNATE VALUE OR APPLICATION

1. DC voltage measurements taken with vacuum tube voltmeter; AC voltages measured with 1000 ohm per volt voltmeter.
2. Socket connections are shown as bottom views.
3. Measured values are from socket pin to common ground.
4. Line voltage maintained at 117 volts for voltage readings.
5. Nominal tolerance of component values makes possible a variation of ±15% in voltage and resistance readings.

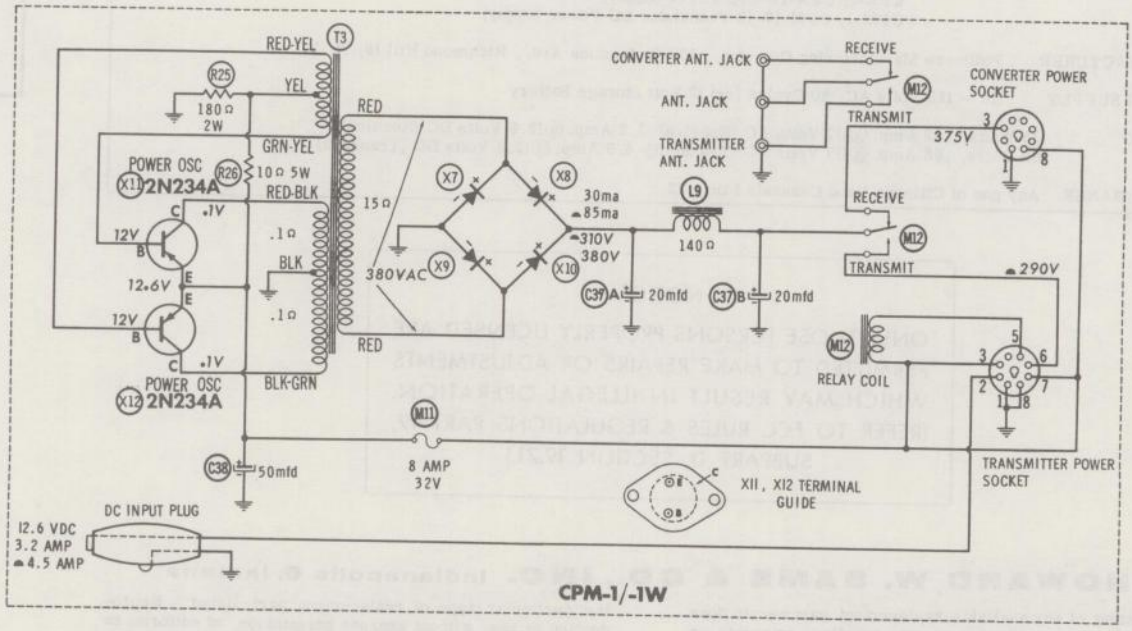

A PHOTOFACT STANDARD NOTATION SCHEMATIC

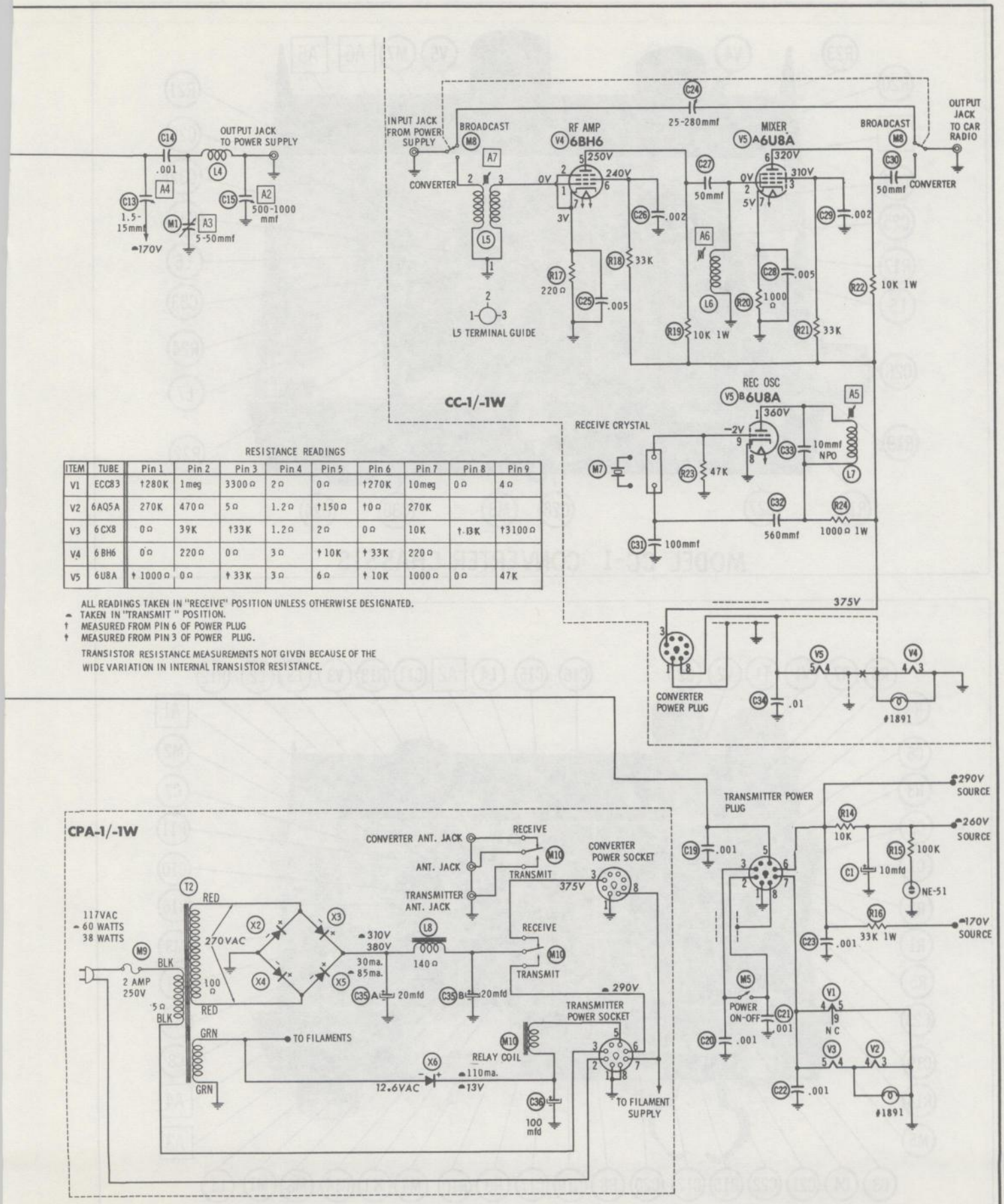

RESISTANCE READINGS

ITEM	TUBE	Pin 1	Pin 2	Pin 3	Pin 4	Pin 5	Pin 6	Pin 7	Pin 8	Pin 9
V1	ECC83	†280K	1meg	3300Ω	2Ω	0Ω	†270K	10meg	0Ω	4Ω
V2	6AQ5A	270K	470Ω	5Ω	1.2Ω	†150Ω	†0Ω	270K		
V3	6CX8	0Ω	39K	†33K	1.2Ω	2Ω	0Ω	10K	†.13K	†3100Ω
V4	6BH6	0Ω	220Ω	0Ω	3Ω	‡10K	‡33K	220Ω		
V5	6U8A	‡1000Ω	0Ω	‡33K	3Ω	6Ω	‡10K	1000Ω	0Ω	47K

ALL READINGS TAKEN IN "RECEIVE" POSITION UNLESS OTHERWISE DESIGNATED.
⌒ TAKEN IN "TRANSMIT" POSITION.
† MEASURED FROM PIN 6 OF POWER PLUG
‡ MEASURED FROM PIN 3 OF POWER PLUG.

TRANSISTOR RESISTANCE MEASUREMENTS NOT GIVEN BECAUSE OF THE WIDE VARIATION IN INTERNAL TRANSISTOR RESISTANCE.

PHILMORE MODELS CC-1/-1W, CPA-1/-1W, CPM-1/-1W, CT-1/-1W

MODEL CC-1 CONVERTER CHASSIS

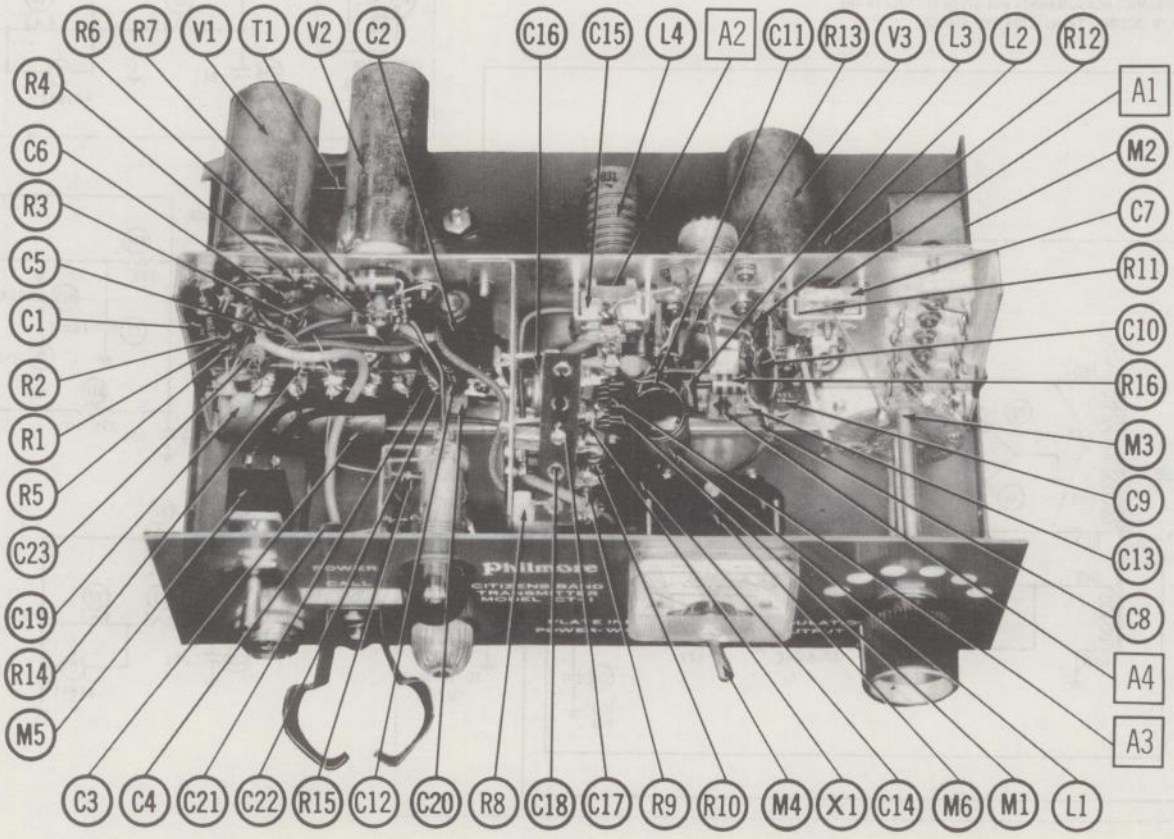

MODEL CT-1 TRANSMITTER CHASSIS

ALIGNMENT INSTRUCTIONS

ALIGNMENT INSTRUCTIONS—READ CAREFULLY BEFORE ATTEMPTING ALIGNMENT

Best results will be obtained when adjusting A2 and A3 if the antenna normally used is connected and the unit is as nearly in the cabinet as possible.
Suggested Alignment Tools:
A1 thru A7.....GENERAL CEMENT #5000, 5003, 5066, 8271, 8272, 8276, 8277, 8290, 8609, 8722, 9150, 9298
WALSCO #2515, 2516, 2518, 2519, 2525, 2541

TRANSMITTER ALIGNMENT

ONLY THOSE PERSONS PROPERLY LICENSED ARE PERMITTED TO MAKE REPAIRS OR ADJUSTMENTS WHICH MAY RESULT IN ILLEGAL OPERATION. (REFER TO FCC RULES & REGULATIONS PART 19, SUBPART D, SECTION 19.71)

If panel meter is used, connect a 1000Ω resistor across meter terminals to prevent damage. Switch should be in "Plate Input Power" for adjustments. Remove resistor after completing adjustments.

	SPECIAL INSTRUCTIONS	INDICATOR	ADJUST	REMARKS
1.	Channel Selector to highest channel used. Connect dummy load or antenna.	RF Wattmeter or built-in meter.	A1	Key Transmitter. Adjust for maximum deflection on wattmeter. Rock A1 to each side of peak noting rate of dropoff. Set just below peak on side of gradual dropoff. Panel meter will dip.
2.	Channel Selector to mid frequency used.	"	A2, A3	Key Transmitter. Adjust for maximum deflection on wattmeter. Panel meter will dip. Repeat Steps 1 and 2.
3.	Channel Selector to highest channel used.	RF Wattmeter.	A4	Key Transmitter. Rotate A3 from full open to full mesh, noting 2 meter peaks. Tune to highest peak. Adjust A4 for maximum deflection. Readjust A3 from full open to full mesh, again noting the 2 peaks. Tune for the highest peak. Repeat adjustments of A3 and A4 until one peak of A3 is sharply reduced.
4.	Set meter switch to modulation output. Key Transmitter and adjust C15 for a meter reading of approximately 3.			

CONVERTER ALIGNMENT MODEL CC-1

Connect converter to auto radio antenna input.

	SIGNAL GENERATOR COUPLING	SIGNAL GENERATOR FREQUENCY	RADIO DIAL SETTING	INDICATOR	ADJUST	REMARKS
1.	Not used.			Connect VTVM across R24	A5	Adjust for MINIMUM meter indication.
2.	High side to antenna input, low side to ground.	27.03MC (400% Mod.)	Approximately 635KC on AM receiver.	Across voice coil on auto radio.	A6, A7	Adjust for maximum deflection.

PARTS LIST AND DESCRIPTIONS

TUBES

◆ AMPEREX ◆ GENERAL ELECTRIC ◆ RCA ◆ RAYTHEON ◆ SYLVANIA ◆

ITEM No.	USE	TYPE
V1	Speech Amp.	ECC83 (12AX7)*
V2	Modulator	6AQ5A

ITEM No.	USE	TYPE
V3	Transmit Osc. - Final Amp.	6CX8

* Alternate

POWER RECTIFIERS & SIGNAL DIODES

ITEM No.	CURRENT RATING (Measured)	ORIGINAL Part or Type No.	RECTIFIERS		DIODES	NOTES
			RCA PART No.	SARKES TARZIAN PART No.		
X1		CT1034				Meter Signal (1N34A or 1N295)

ELECTROLYTIC CAPACITORS

ITEM No.	RATING		REPLACEMENT DATA						
	CAP.	VOLT.	PHILMORE PART No.	AEROVOX PART No.	CORNELL-DUBILIER PART No.	GENERAL ELECTRIC PART No.	MALLORY PART No.	PYRAMID PART No.	SPRAGUE PART No.
C1	10	25	CT1021	PTT79	NLW10-25	MT1-5	TT25X10	MLV10-25	TE-1204
C2	30	25	CT1023	PTT83	NLW30-25	MT1-14	TT50X35	TD-30-150	TE-1208
C3	10	300	CT1022	PRS1620	BR10-450	QT1-8	TC62	TD-10-450	TVA-1604

FIXED CAPACITORS

ITEM No.	RATING	REMARKS	REPLACEMENT DATA					
			AEROVOX PART No.	CENTRALAB PART No.	CORNELL-DUBILIER PART No.	ELMENCO PART No.	MALLORY PART No.	SPRAGUE PART No.
C4	.005		BPD-005	DD-502	L10D5	CCD-502	GP250	5GA-D50
C5	.005		BPD-005	DD-502	L10D5	CCD-502	GP250	5GA-D50
C6	.01		BPD-01	DD-103	BYA10S1	CCD-103	GP110	5GA-S10
C7	3-35	#CT1025				403		
C8	680		BPD-680	DD-681	L10T68	CCD-681	GP368	5GA-T68
C9	10 NPO			TCZ-10	C10Q1C	CCTC-100	CNO-410	10TCC-Q10
C10	.001		BPD-001	DD-102	L10D1	CCD-102	GP210	5GA-D10
C11	.001		BPD-001	DD-102	L10D1	CCD-102	GP210	5GA-D10
C12	.01		BPD-01	DD-103	BYA10S1	CCD-103	GP110	5GA-S10
C13	1.5-15	#CT1024				402		
C14	.001		BPD-001	DD-102	L10D1	CCD-102	GP210	5GA-D10
C15	500-1000	#CT1026						
C16	3-35	#CT1025				403		
C17	.001		BPD-001	DD-102	L10D1	CCD-102	GP210	5GA-D10
C18	.001		BPD-001	DD-102	L10D1	CCD-102	GP210	5GA-D10
C19	.001		BPD-001	DD-102	L10D1	CCD-102	GP210	5GA-D10
C20	.001		BPD-001	DD-102	L10D1	CCD-102	GP210	5GA-D10
C21	.001		BPD-001	DD-102	L10D1	CCD-102	GP210	5GA-D10
C22	.001		BPD-001	DD-102	L10D1	CCD-102	GP210	5GA-D10
C23	.001		BPD-001	DD-102	L10D1	CCD-102	GP210	5GA-D10

\# Philmore Part Number.

RESISTORS

All wattages 1/2 watt, or less, unless otherwise listed.

ITEM No.	RATING	REPLACEMENT DATA		
		IRC PART No.	WORKMAN PART No.	REMARKS
R1	1meg			
R2	3300Ω			
R3	270K			
R4	10meg			
R5	270K			
R6	270K			
R7	470Ω 1W			
R8	3000Ω 5W 5%	PW5-3000	5W-SQ-3000	

ITEM No.	RATING	REPLACEMENT DATA		
		IRC PART No.	WORKMAN PART No.	REMARKS
R9	1.8meg 1%			
R10	470K			
R11	39K			
R12	10K			
R13	10K 1W			
R14	10K			
R15	100K			
R16	33K 1W			

COILS (RF-IF)

ITEM No.	USE	REPLACEMENT DATA					NOTES
		PHILMORE PART No.	Merit PART No.	Miller PART No.	Stancor PART No.	Workman PART No.	
L1	Meter Coil	CT1032					
L2	Osc.	CT1030					
L3	RF Choke (2.2uh)	CT1033					
L4	Ant. Load	CT1031					

TRANSFORMER (MOD.)

ITEM No.	TURNS RATIO		REPLACEMENT DATA					NOTES
	PRI.	SEC.	PHILMORE PART No.	MERIT PART No.	STANCOR PART No.	THORDARSON PART No.	TRIAD PART No.	
T1	1	.8	CT1035					

MISCELLANEOUS

ITEM No.	PART NAME	PHILMORE PART No.	NOTES
M1	Tuning Cap.	CT1028	One Gang 5-50mmf
M2	Crystal	CT1041	Transmit (27.105MC)
M3	Switch	CT1047	Crystal Selector (Rotary Wafer Type)
M4	Switch	CT1046	Meter (DPDT Toggle Type)
M5	Switch	CT1045	Power (SPST Toggle Type)
M6	Meter	CT1044	Modulation-Power
	Microphone	CT1042	

WIRING DATA

General-use Hook-up Wire .... Use BELDEN No. 8530 (Solid) Available in 12 Colors
8524 (Stranded) Available in 12 Colors
Shielded Antenna Lead ..... Use BELDEN No. 8214 Lowest Loss (RG-8/U Type)
8237 Low Loss (RG-8/U)
8240 (Solid) Miniature (RG-58/U)
8259 (Stranded) Miniature (RG-58A/U)
Coiled Microphone Cable ..... Use BELDEN No. 8497 3 Conductor- 1 Shielded for Press-to-Talk (Neoprene)
8496 3 Conductor- 1 Shielded for Press-to-Talk (Vinyl)
Ignition Noise Suppression .... Use BELDEN No. 7300-Series Spark-Plug Sets
Bonding Strap ..... Use BELDEN No. 8661 (3/8 In.)

PARTS LIST AND DESCRIPTIONS

WIRING DATA

General-use Unshielded Hook-up Wire	Use BELDEN No. 8530 (Solid 22AWG) 8524 (Stranded 22AWG) 8570 (Stranded 26AWG)	Available in 12 Colors

TUBES

ITEM No.	USE	TYPE	ITEM No.	USE	TYPE
V4	RF Amp.	6BH6	V5	Mixer - Receiver Osc.	6U8A

FIXED CAPACITORS

ITEM No.	RATING	REMARKS	REPLACEMENT DATA					
			AEROVOX PART No.	CENTRALAB PART No.	CORNELL-DUBILIER PART No.	ELMENCO PART No.	MALLORY PART No.	SPRAGUE PART No.
C24	25-280	#CC1015				464		
C25	.005		BPD-005	DD-502	L10D5	CCD-502	GP250	5GA-D50
C26	.002		BPD-002	DD-202	L10D2	CCD-202	GP220	5GA-D20
C27	50		BPD-50	DD-500	L10Q5	CCD-500	GP450	5GA-Q50
C28	.005		BPD-005	DD-502	L10D5	CCD-502	GP250	5GA-D50
C29	.002		BPD-002	DD-202	L10D2	CCD-202	GP220	5GA-D20
C30	50		BPD-50	DD-500	L10Q5	CCD-500	GP450	5GA-Q50
C31	100		BPD-100	DD-101	L10T1	CCD-101	GP310	5GA-T10
C32	560			DD-561	L10T56	CCD-561	GP356	5GA-T56
C33	10 NPO			TCZ-10	C10Q1C	CCTO-100	CNO-410	10TCC-Q10
C34	.01		BPD-01	DD-103	BYA10S1	CCD-103	GP110	5GA-S10

Philmore Part Number.

RESISTORS

All wattages 1/2 watt, or less, unless otherwise listed.

ITEM No.	RATING	REPLACEMENT DATA			ITEM No.	RATING	REPLACEMENT DATA		
		IRC PART No.	WORKMAN PART No.	REMARKS			IRC PART No.	WORKMAN PART No.	REMARKS
R17	220Ω				R21	33K			
R18	33K				R22	10K 1W			
R19	10K 1W				R23	47K			
R20	1000Ω				R24	1000Ω 1W			

COILS (RF-IF)

ITEM No.	USE	REPLACEMENT DATA					NOTES
		PHILMORE PART No.	Merit PART No.	Miller PART No.	Stancor PART No.	Workman PART No.	
L5	RF Input	CC1018					
L6	Mixer	CC1019					
L7	Osc.	CC1020					

MISCELLANEOUS

ITEM No.	PART NAME	PHILMORE PART No.	NOTES
M7	Crystal	CC1024	Receive (8.8MC)
M8	Switch	CC1025	Converter-Broadcast (DPDT Toggle Type)

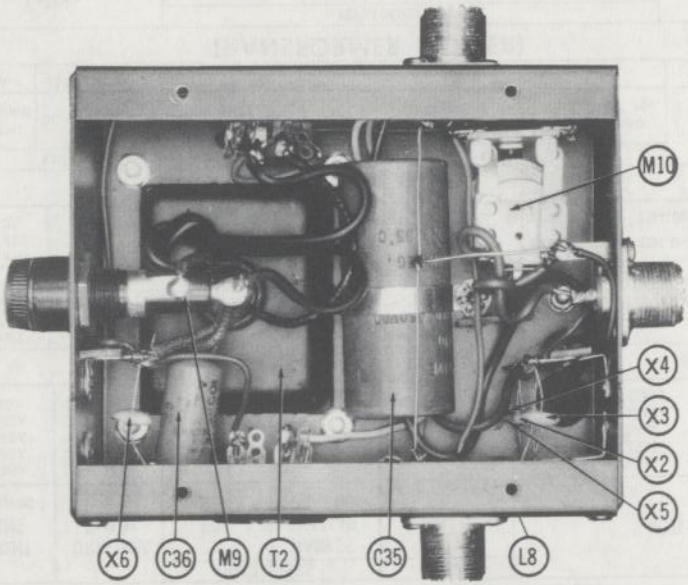

CPA-1/-1W

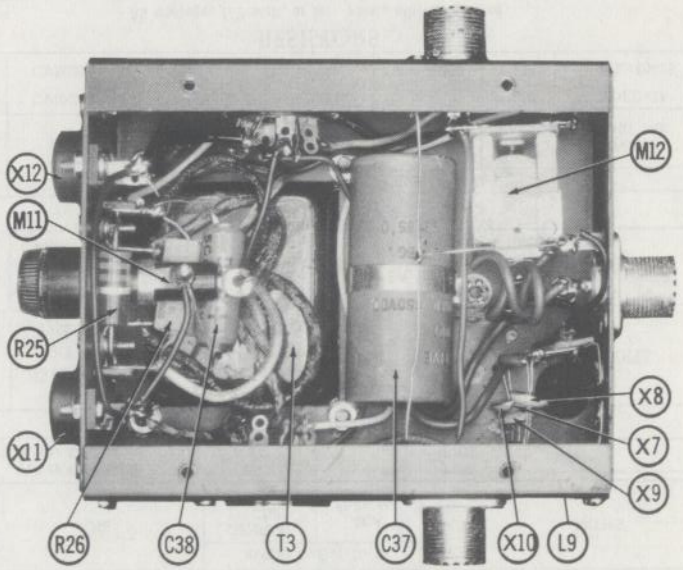

CPM-1/-1W

PARTS LIST AND DESCRIPTIONS

POWER RECTIFIERS & SIGNAL DIODES

ITEM No.	CURRENT RATING (Measured)	ORIGINAL Part or Type No.	RECTIFIERS: RCA PART No.	RECTIFIERS: SARKES TARZIAN PART No.	DIODES	NOTES
X2	.085A	CP1006	2N3194	2F4		HV Rectifier (2E4)
X3	.085A	CP1006	2N3194	2F4		HV Rectifier (2E4)
X4	.085A	CP1006	2N3194	2F4		HV Rectifier (2E4)
X5	.085A	CP1006	2N3194	2F4		HV Rectifier (2E4)
X6	.110A	CP1006	2N3193	2F4		Relay Control (2E4)

ELECTROLYTIC CAPACITORS

ITEM No.	RATING: CAP.	RATING: VOLT.	REPLACEMENT DATA: PHILMORE PART No.	AEROVOX PART No.	CORNELL-DUBILIER PART No.	GENERAL ELECTRIC PART No.	MALLORY PART No.	PYRAMID PART No.	SPRAGUE PART No.
C35A	20	450	CP1001	PRS2390	BBRD2245	QT2-6	TCD75	TDLD-28	TVA-2730
B	20	450							
C36	100	25	CP1002	PTT86	NLW100-25	MT1-20	TC2501	TD-100-25	TE-1211

FILTER CHOKE

ITEM No.	RATINGS: CURRENT (Measured)	RATINGS: DC RES.	RATINGS: INDUCTANCE (0 CURRENT 1000~)	REPLACEMENT DATA: PHILMORE PART No.	MERIT PART No.	STANCOR PART No.	THORDARSON PART No.	TRIAD PART No.	NOTES
L8	.085A	150Ω	4.8 HY	CP1005					

TRANSFORMER (POWER)

ITEM No.	RATING: PRI.	RATING: SEC. 1	RATING: SEC. 2	REPLACEMENT DATA: PHILMORE PART No.	MERIT PART No.	STANCOR PART No.	THORDARSON PART No.	TRIAD PART No.	NOTES
T2	117VAC @ .66A	270VAC @ .085A	12.6V @ 1.4A	CP1004					

FUSES

ITEM No.	TYPE	RATING	PHILMORE PART No.: FUSE	PHILMORE PART No.: HOLDER	LITTELFUSE PART No.: FUSE	LITTELFUSE PART No.: HOLDER	BUSS PART No.: FUSE	BUSS PART No.: HOLDER
M9	3AG	2A 250V	CP1046	CP1011	312002, (3AG 2A 250V)	155020	AGC 2	HKP

MISCELLANEOUS

ITEM No.	PART NAME	PHILMORE PART No.	NOTES
M10	Relay	CP1008	Receive-Transmit (DPDT 12V DC)

WIRING DATA

General-use Unshielded Hook-up Wire ..... Use BELDEN No. 8530 (Solid) Available in 12 Colors
8524 (Stranded) Available in 12 Colors
Power Cord ..... Use BELDEN No. 17106 (Plastic) or 17126 (Rubber) - 6 Ft.
17109 (Plastic) or 17129 (Rubber) - 9 Ft.
Power Cord (Interlock Type) ..... Use BELDEN No. 8874 (Rubber) or 8895 (Plastic)

WIRING DATA

General-use Unshielded Hook-up Wire ..... Use BELDEN No. 8530 (Solid) Available in 12 Colors
8524 (Stranded) Available in 12 Colors
Shielded Hook-up Wire ..... Use BELDEN No. 8885
Rear Seat Speaker Extension Cable ..... Use BELDEN No. 8782 (Stranded) Coded Parallel Leads
Bonding Strap ..... Use BELDEN No. 8661 (3/8 In.) or 8670 (3/4 In.)

TRANSISTORS

ITEM No.	ORIG. TYPE	USE	REPLACEMENT DATA: GENERAL ELECTRIC PART No.	REPLACEMENT DATA: RCA PART No.	NOTES
X11	2N234A	Power Oscillator	GE-3		PNP
X12	2N234A	Power Oscillator	GE-3		PNP

POWER RECTIFIERS & SIGNAL DIODES

ITEM No.	CURRENT RATING (Measured)	ORIGINAL Part or Type No.	RECTIFIERS: RCA PART No.	RECTIFIERS: SARKES TARZIAN PART No.	DIODES	NOTES
X7	.085A	CP1006	2N3194	2F4		HV Rectifier (2E4)
X8	.085A	CP1006	2N3194	2F4		HV Rectifier (2E4)
X9	.085A	CP1006	2N3194	2F4		HV Rectifier (2E4)
X10	.085A	CP1006	2N3194	2F4		HV Rectifier (2E4)

ELECTROLYTIC CAPACITORS

ITEM No.	RATING: CAP.	RATING: VOLT.	REPLACEMENT DATA: PHILMORE PART No.	AEROVOX PART No.	CORNELL-DUBILIER PART No.	GENERAL ELECTRIC PART No.	MALLORY PART No.	PYRAMID PART No.	SPRAGUE PART No.
C37A	20	450	CP1001	PRS2390	BBRD2245	QT2-6	TCD75	TDLD-28	TVA-2730
B	20	450							
C38	50	25	CPM1201	PTT85	NLW50-25	MT1-20	TC29	MLV50-25	TE-1209

RESISTORS

All wattages 1/2 watt, or less, unless otherwise listed.

ITEM No.	RATING	REPLACEMENT DATA: IRC PART No.	REPLACEMENT DATA: WORKMAN PART No.	REPLACEMENT DATA: REMARKS	ITEM No.	RATING	REPLACEMENT DATA: IRC PART No.	REPLACEMENT DATA: WORKMAN PART No.	REPLACEMENT DATA: REMARKS
R25	180Ω 2W				R26	10Ω 5W	PW5-10Ω	5W-SQ-10	

FILTER CHOKE

ITEM No.	RATINGS: CURRENT (Measured)	RATINGS: DC RES.	RATINGS: INDUCTANCE (0 CURRENT 1000~)	REPLACEMENT DATA: PHILMORE PART No.	MERIT PART No.	STANCOR PART No.	THORDARSON PART No.	TRIAD PART No.	NOTES
L9	.085A	140Ω	4.8HY	CP1005					

TRANSFORMER (POWER)

ITEM No.	RATING: INPUT	RATING: OUTPUT	REPLACEMENT DATA: PHILMORE PART No.	MERIT PART No.	STANCOR PART No.	THORDARSON PART No.	TRIAD PART No.	NOTES
T3	12.6VDC @ 4.5A	380VAC @ .085A	CPM1205					

FUSES

ITEM No.	TYPE	RATING	PHILMORE PART No.: FUSE	PHILMORE PART No.: HOLDER	LITTELFUSE PART No.: FUSE	LITTELFUSE PART No.: HOLDER	BUSS PART No.: FUSE	BUSS PART No.: HOLDER
M11	3AG	8A 32V	CPM1222	CP1011	312008, (3AG 8A 32V)	155020	AGC 8	HKP

MISCELLANEOUS

ITEM No.	PART NAME	PHILMORE PART No.	NOTES
M12	Relay	CP1008	Receive-Transmit (DPDT 12V DC)

PHOTOFACT® Folder

PHILMORE MODELS TC-11, TC-11W, TC-612, TC-612W

TRADE NAME	Philmore Models TC-11, TC-11W, TC-612, TC-612W
MANUFACTURER	Philmore Manufacturing Co., Inc., 130-01 Jamaica Ave., Richmond Hill 18, N. Y.
TYPE SET	AC (or) Battery Operated 6 Tube Citizens Band Transmitter-Receiver
POWER SUPPLY	TC-11 (W): 110-120 Volts AC, 60 Cycles RATING 35 Watts, .32 Amp. @117 Volts AC (Receive) TC-612 (W): 6 or 12 Volt Storage Battery 41 Watts, .38 Amp. @117 Volts AC (Transmit) 3.5 Amp. @6.3 Volts DC (Receive) 3.7 Amp. @6.3 Volts DC (Transmit) 2.8 Amp. @12.6 Volts DC (Receive) 3.2 Amp. @12.6 Volts DC (Transmit)
FREQ. RANGE	Any 3 of Citizens Band Channels 1 thru 22

PHILMORE MODELS TC-11, TC-11W, TC-612, TC-612W

NOTICE

ONLY THOSE PERSONS PROPERLY LICENSED ARE PERMITTED TO MAKE REPAIRS OR ADJUSTMENTS WHICH MAY RESULT IN ILLEGAL OPERATION. (REFER TO FCC RULES & REGULATIONS PART 19, SUBPART D, SECTION 19.71.)

HOWARD W. SAMS & CO., INC. Indianapolis 6, Indiana

LY747

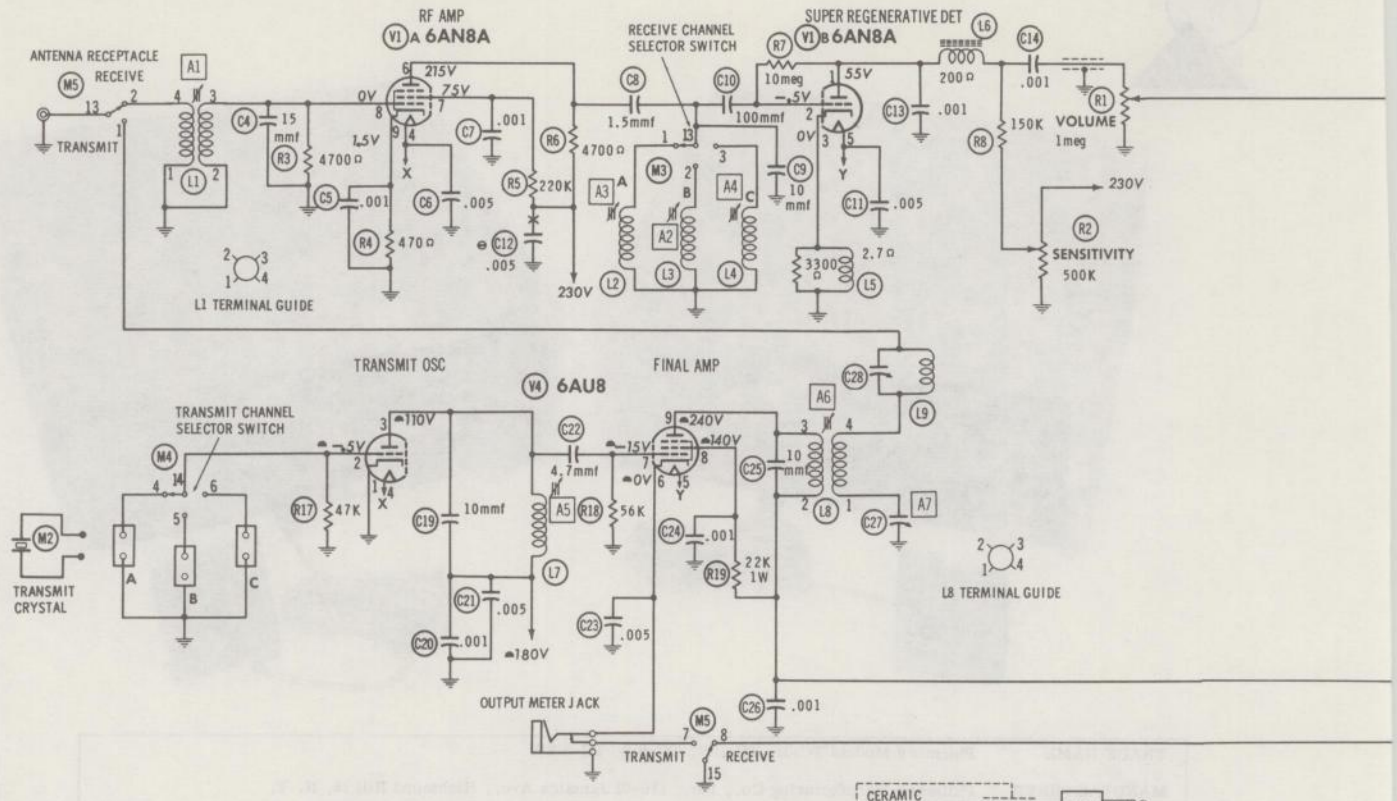

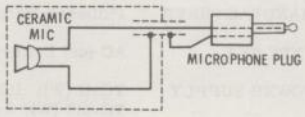

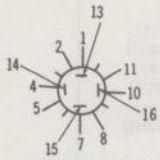

RECEIVE-TRANSMIT-SWITCH (M5) SHOWN IN "RECEIVE" POSITION.

RECEIVE CHANNEL SELECTOR SWITCH (M3) SHOWN IN "CHANNEL A" POSITION.
SWITCH SEQUENCE:
1. CHANNEL A
2. CHANNEL B
3. CHANNEL C

TRANSMIT CHANNEL SELECTOR SWITCH (M4) SHOWN IN "CHANNEL A" POSITION.
SWITCH SEQUENCE:
1. CHANNEL A
2. CHANNEL B
3. CHANNEL C

RESISTANCE READINGS

ITEM	TUBE	Pin 1	Pin 2	Pin 3	Pin 4	Pin 5	Pin 6	Pin 7	Pin 8	Pin 9
V1	6AN8A	† 200K	†10meg	2.7Ω	FIL	FIL	†15K	†230K	0Ω	470Ω
V2	12AX7	†220K	▬ 1meg 0Ω	3300Ω	FIL	FIL	▬†230K	0Ω	3300Ω	FIL
V3	6AQ5A	270K	470Ω	FIL	FIL	† 265Ω	† 0Ω	270K		
V4	6AU8	0Ω	47K	▬†10K	FIL	FIL	▬0Ω	56K	†22K	† 375Ω
V5	6X4	215Ω	NC	FIL	FIL	NC	225Ω	¶		
V6	6X4	170Ω	NC	FIL	FIL	NC	170Ω	¶		

ALL READINGS TAKEN IN "RECEIVE" POSITION UNLESS OTHERWISE DESIGNATED.
¶ THIS READING WILL VARY DEPENDING UPON THE CONDITION OF THE ELECTROLYTIC IN THE CIRCUIT.
† MEASURED FROM PIN 6 OF POWER INPUT SOCKET.
▬ MEASURED IN "TRANSMIT" POSITION.
NC NO CONNECTION

⊖ SEE PARTS LIST FOR ALTERNATE VALUE OR APPLICATION

1. DC voltage measurements taken with vacuum tube voltmeter; AC voltages measured with 1000 ohm per volt voltmeter.
2. Socket connections are shown as bottom views.
3. Measured values are from socket pin to common ground.
4. Line voltage maintained at 117 volts for voltage readings.
5. Nominal tolerance of component values makes possible a variation of ±15% in voltage and resistance readings.
6. All controls at minimum, proper output load connected.

A PHOTOFACT STANDARD NOTATION SCHEMATIC

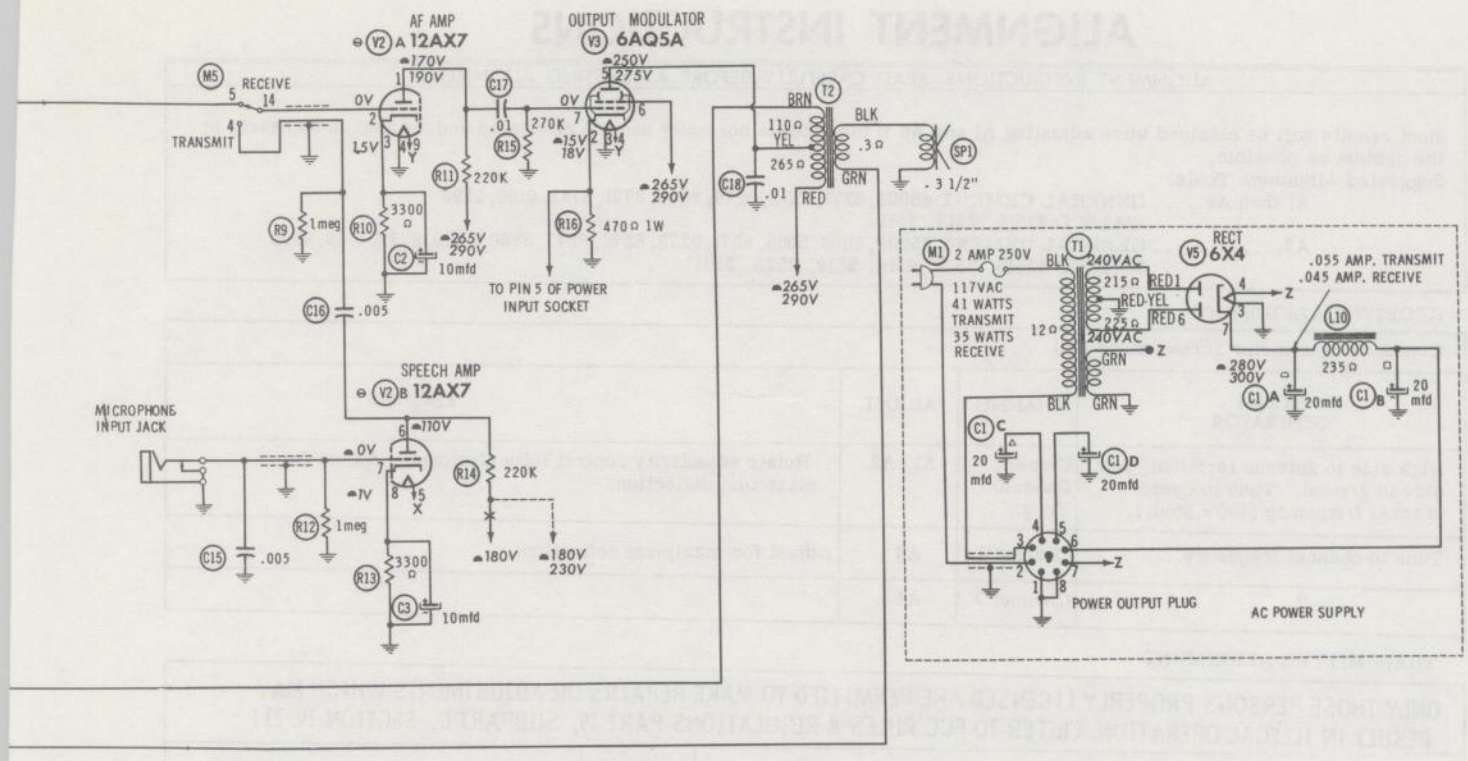

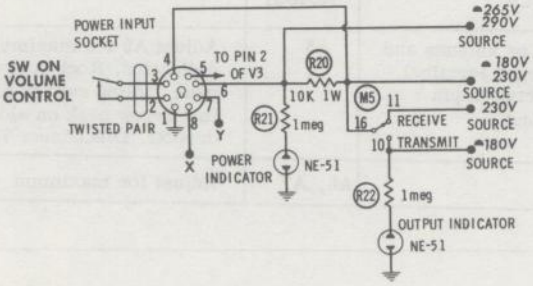

NUMBERS ASSIGNED TO COILS, SWITCHES, PLUGS, SOCKETS, AND TRANSFORMERS ARE TO FACILITATE CIRCUIT TRACING OR COMPONENT REPLACEMENT AND MAY NOT NECESSARILY BE FOUND ON THE UNIT.

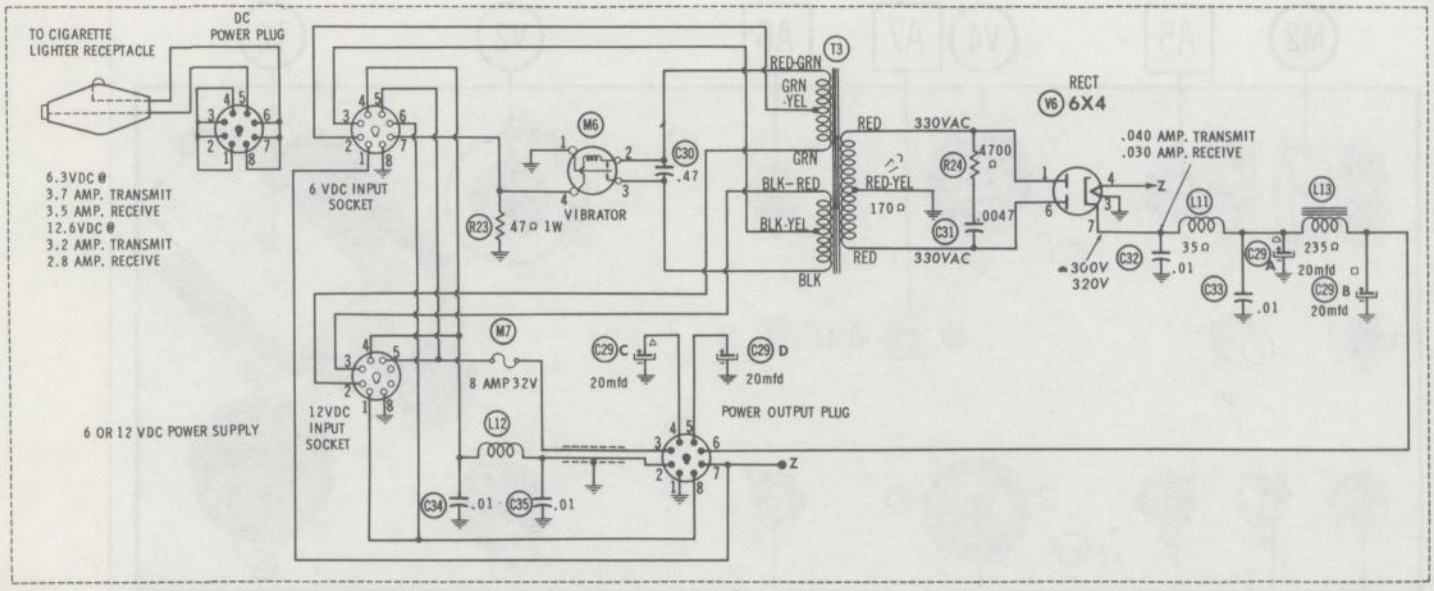

PHILMORE MODELS TC-11, TC-11W, TC-612, TC-612W

ALIGNMENT INSTRUCTIONS

ALIGNMENT INSTRUCTIONS—READ CAREFULLY BEFORE ATTEMPTING ALIGNMENT

Best results will be obtained when adjusting A1 and A6 if the antenna normally used is connected and the unit is as nearly in the cabinet as possible.

Suggested Alignment Tools:

A1 thru A6..... GENERAL CEMENT #5003, 8271, 8275, 8276, 8609, 8721, 8722, 9150, 9298
WALSCO #2516, 2518, 2519

A7..... GENERAL CEMENT #5000, 5003, 5066, 8271, 8272, 8276, 8277, 8290, 8609, 8722, 9150, 9298
WALSCO #2515, 2516, 2518, 2519, 2525, 2541

RECEIVER ALIGNMENT

Connect output meter across voice coil.

	SIGNAL GENERATOR	CHANNEL	ADJUST	REMARKS
1.	High side to antenna terminal, low side to ground. Tune to center channel frequency (400~ Mod.).	Center Channel Freq.	A1, A2	Rotate sensitivity control fully clockwise. Adjust for maximum deflection.
2.	Tune to channel frequency.	Channel 1	A3	Adjust for maximum deflection.
3.	"	Channel 3	A4	"

TRANSMITTER ALIGNMENT

ONLY THOSE PERSONS PROPERLY LICENSED ARE PERMITTED TO MAKE REPAIRS OR ADJUSTMENTS WHICH MAY RESULT IN ILLEGAL OPERATION. (REFER TO FCC RULES & REGULATIONS PART 19, SUBPART D, SECTION 19.71)

	SPECIAL INSTRUCTIONS	INDICATOR	ADJUST	REMARKS
1.	Place transmit channel selector in the center channel position.	Connect dummy load or antenna and RF wattmeter to antenna terminal. Connect DC VTVM between pin 7 (grid) of V4 and ground.	A5	Adjust A5 for maximum VTVM deflection. Rock A5 to each side of peak, noting rate of dropoff. Set just below peak on side of gradual dropoff. Disconnect VTVM.
2.	"	"	A6, A7	Adjust for maximum output.

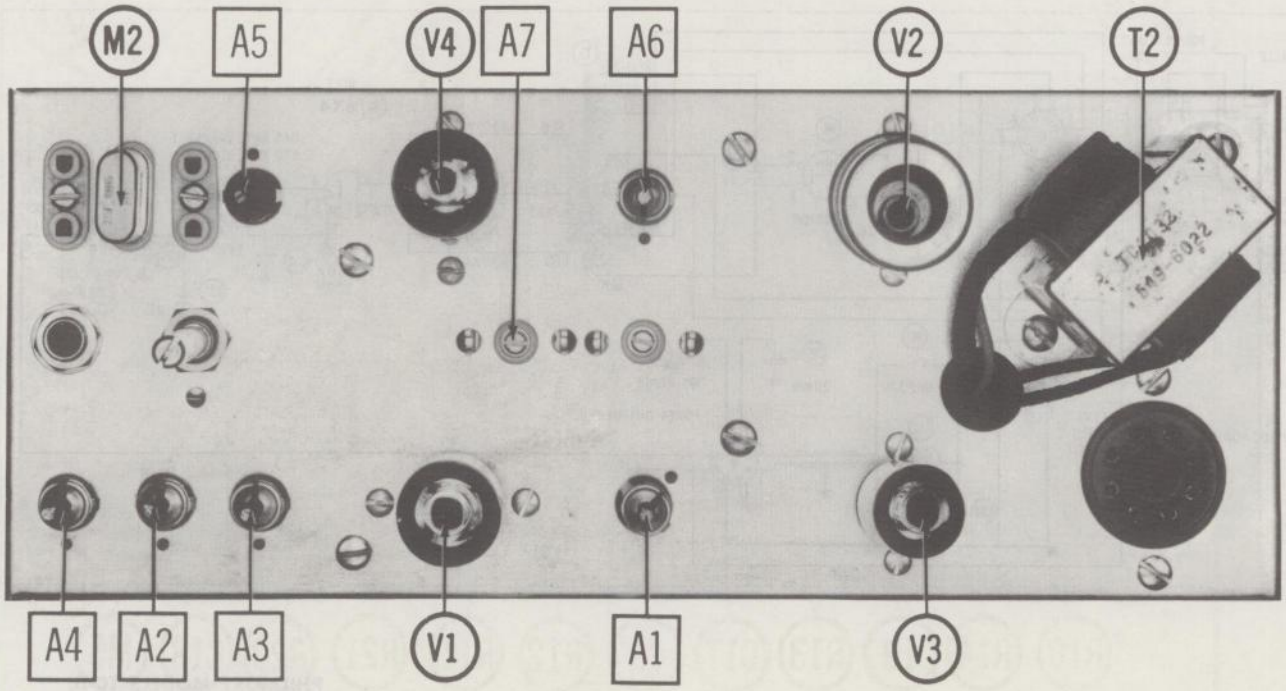

CHASSIS—TOP VIEW

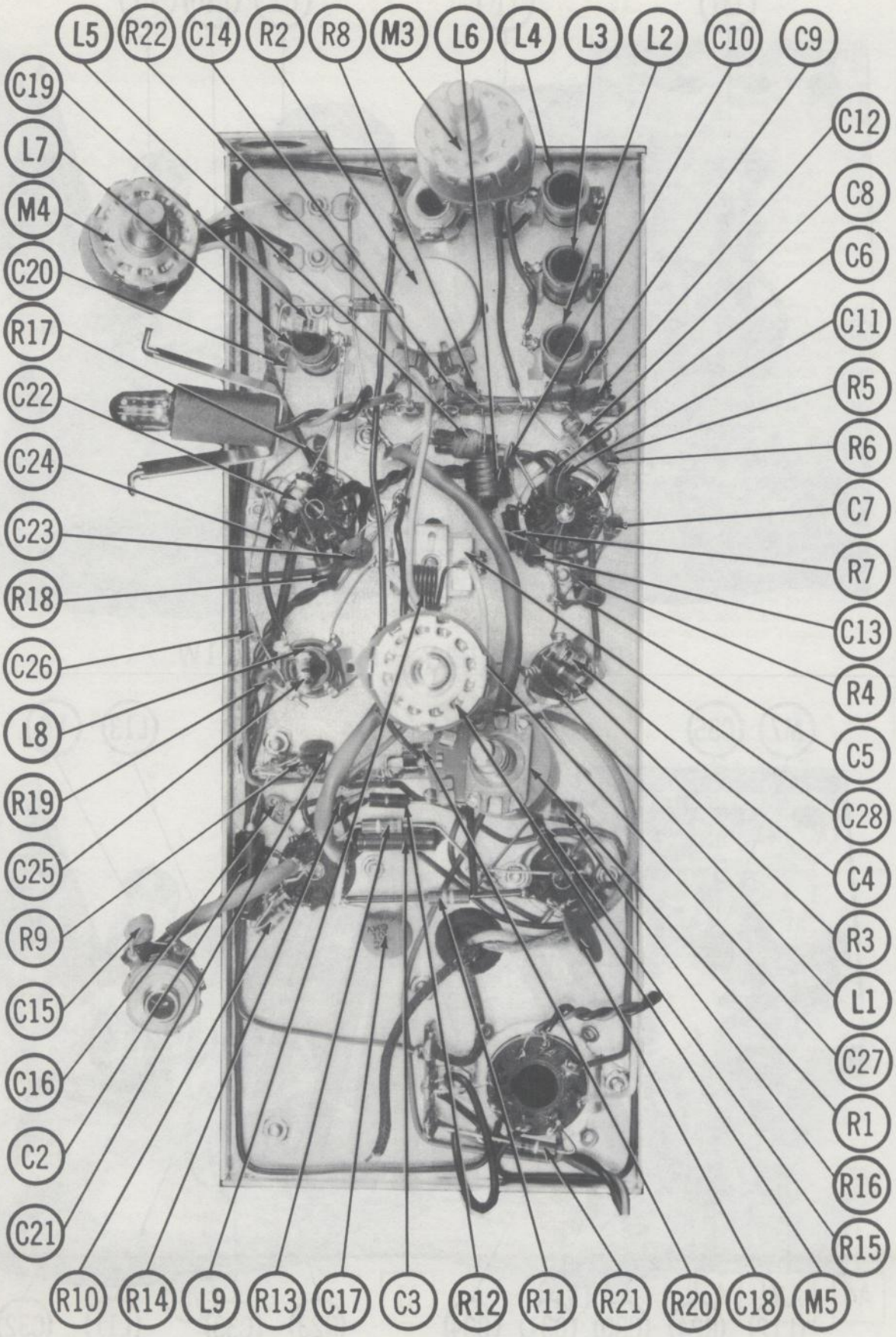

CHASSIS – BOTTOM VIEW

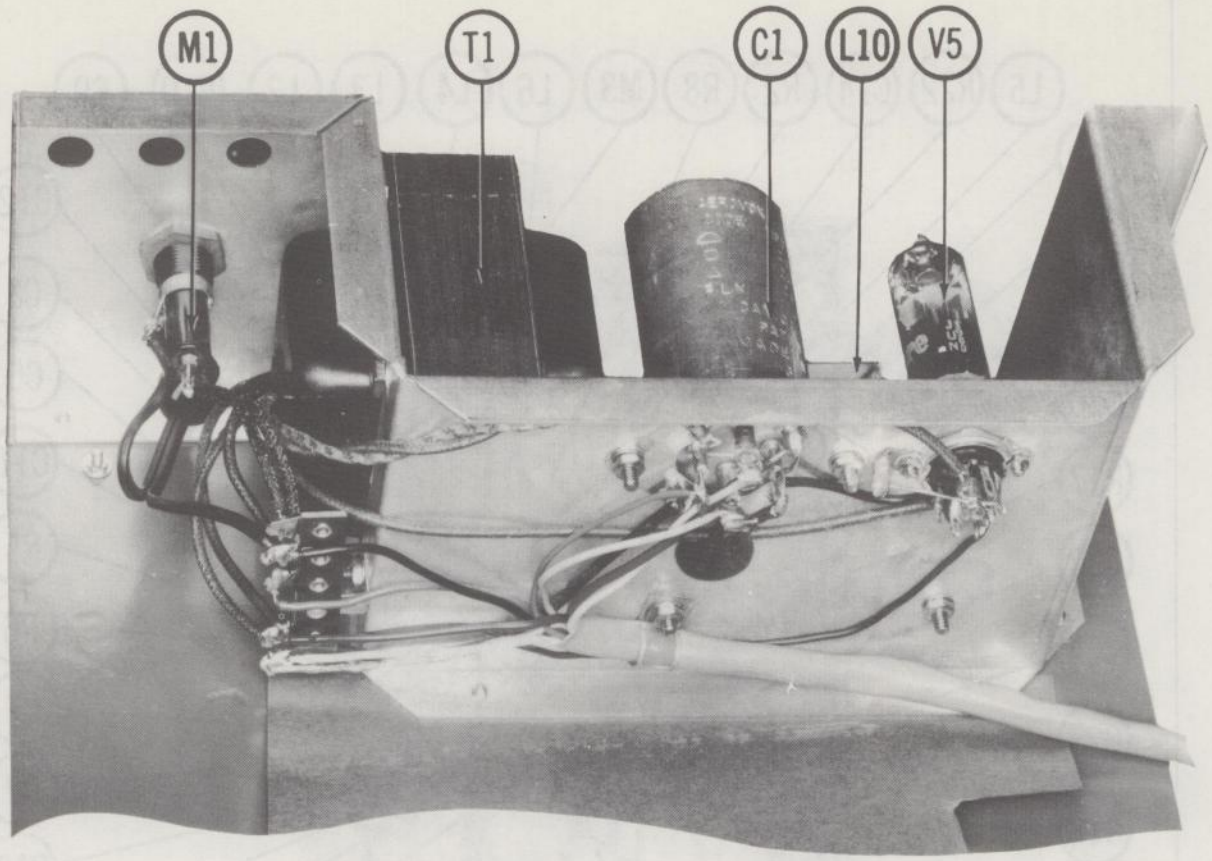

POWER SUPPLY – MODEL TC-11W

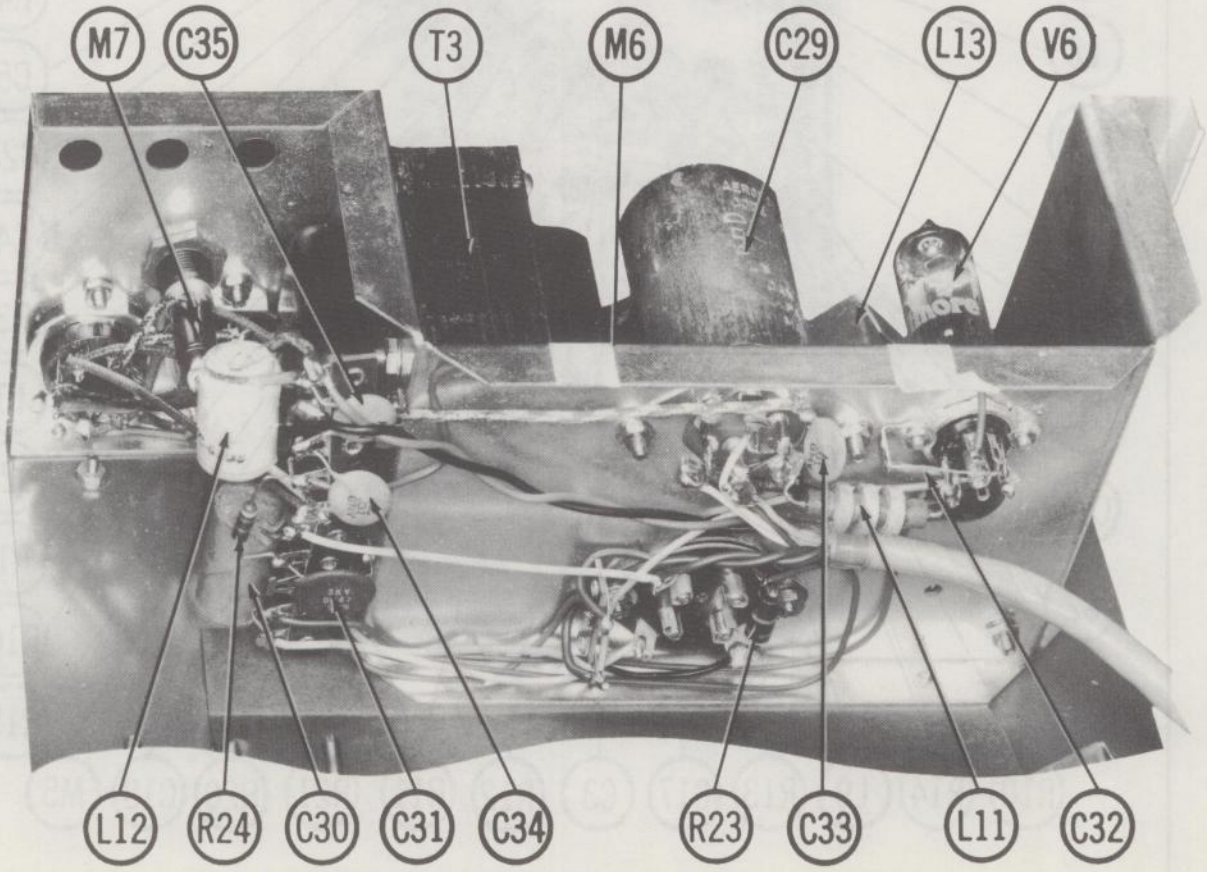

POWER SUPPLY – MODEL TC-612W

PARTS LIST AND DESCRIPTIONS

WIRING DATA

General-use Hook-up Wire	Use BELDEN No. 8530 (Solid) Available in 12 Colors 8524 (Stranded) Available in 12 Colors)
Shielded Antenna Lead	Use BELDEN No. 8214 Lowest Loss (RG-8/U Type) 8237 Low Loss (RG-8/U) 8240 (Solid) Miniature (RG-58/U) 8259 (Stranded) Miniature (RG-58A/U)
Coiled Microphone Cable	Use BELDEN No. 8499 Single Conductor Shielded (Neoprene) 8498 Single Conductor Shielded (Vinyl)
Ignition Noise Suppression	Use BELDEN No. 7300-Series Spark-Plug Sets
Bonding Strap	Use BELDEN No. 8661 (3/8 In.)

TUBES

◆ AMPEREX ◆ GENERAL ELECTRIC ◆ RCA ◆ RAYTHEON ◆ SYLVANIA ◆

ITEM No.	USE	TYPE
V1	RF Amp. - Super-Regenerative Det.	6AN8A
V2	AF Amp. -Speech Amp.	12AX7 (ECC83)*
V3	Output - Modulator	6AQ5A
V4	Transmit Osc. -Final	6AU8
V5	Rectifier	6X4

* Alternate

ELECTROLYTIC CAPACITORS

ITEM No.	RATING		REPLACEMENT DATA						
	CAP.	VOLT.	PHILMORE PART No.	AEROVOX PART No.	CORNELL-DUBILIER PART No.	GENERAL ELECTRIC PART No.	MALLORY PART No.	PYRAMID PART No.	SPRAGUE PART No.
C1A	▲20	450							
B	■20	450	TC1100	AFH4-67	D0520	XC4-48	FP430.97	TMQ-4514	TVL-4724.2
C	▲20	450							
D	20	25							
C2	10	25	TC1027	PTT79	NLW10-25	MT1-5	TT25X10	MLV10-25	TE-1204
C3	10	25	TC1027	PTT79	NLW10-25	MT1-5	TT25X10	MLV10-25	TE-1204

FIXED CAPACITORS

ITEM No.	RATING	REMARKS	REPLACEMENT DATA					
			AEROVOX PART No.	CENTRALAB PART No.	CORNELL-DUBILIER PART No.	ELMENCO PART No.	MALLORY PART No.	SPRAGUE PART No.
C4	15		CC20UP150G	DD-150	L10Q15	CCD-150	GP415	5GA-Q15
C5	.001		BPD-001	DD-102	L10D1	CCD-102	GP210	5GA-D10
C6	.005		BPD-005	DD-502	L10D5	CCD-502	GP250	5GA-D50
C7	.001		BPD-001	DD-102	L10D1	CCD-102	GP210	5GA-D10
C8	1.5	#TC1018	CC20UK1R5C					
C9	10		BPD-10	DD-100	L10Q1	CCD-100	GP410	5GA-Q10
C10	100		BPD-100	DD-101	L10T1	CCD-101	GP310	5GA-T10
C11	.005		BPD-005	DD-502	L10D5	CCD-502	GP250	5GA-D50
C12	.005	Note 1	BPD-005	DD-502	L10D5	CCD-502	GP250	5GA-D50
C13	.001		BPD-001	DD-102	L10D1	CCD-102	GP210	5GA-D10
C14	.001		BPD-001	DD-102	L10D1	CCD-102	GP210	5GA-D10
C15	.005		BPD-005	DD-502	L10D5	CCD-502	GP250	5GA-D50
C16	.005		BPD-005	DD-502	L10D5	CCD-502	GP250	5GA-D50
C17	.01		BPD-01	DD-103	BYA10S1	CCD-103	GP110	5GA-S10
C18	.01		BPD-01	DD-103	BYA10S1	CCD-103	GP110	5GA-S10
C19	10		BPD-10	DD-100	L10Q1	CCD-100	GP410	5GA-Q10
C20	.001		BPD-001	DD-102	L10D1	CCD-102	GP210	5GA-D10
C21	.005		BPD-005	DD-502	L10D5	CCD-502	GP250	5GA-D50
C22	4.7	#TC1019						
C23	.005		BPD-005	DD-502	L10D5	CCD-502	GP250	5GA-D50
C24	.001		BPD-001	DD-102	L10D1	CCD-102	GP210	5GA-D10
C25	10		CC20UJ100C	DD-100	L10Q1	CCD-100	GP410	5GA-Q10
C26	.001		BPD-001	DD-102	L10D1	CCD-102	GP210	5GA-D10
C27		#TC1028						
C28		#TC1028						

\# Philmore Part Number.
Note 1. Not used in some versions.

CONTROLS

All wattages 1/2 watt, or less, unless otherwise listed.

ITEM No.	USE	RESISTANCE	REPLACEMENT DATA				
			PHILMORE PART No.	CENTRALAB PART No.	CLAROSTAT PART No.	CTS-IRC PART No.	MALLORY PART No.
R1	Volume, Switch	1meg	TC1016	B-70-S, or (F2-1meg, KR-1, SU204)	A47-1meg-Z, RS-2, SWE-12	Q13-137, 76-1, or (BU1, CF26, SS5, GC)*	U53, US26, or (UA16A, US41, SL3500)
R2	Sensitivity	500K	TC1017	B-60, or (F2-500K, SU204)	A47-500K-Z, RS-2	Q13-133, or (BU1, CF25, SS5, DC)*	U48, or (UA55A, SL3500)

* "SNAPTROL"

RESISTORS

All wattages 1/2 watt, or less, unless otherwise listed.

ITEM No.	RATING	REPLACEMENT DATA		
		IRC PART No.	WORKMAN PART No.	REMARKS
R3	4700Ω			
R4	470Ω			
R5	220K			
R6	4700Ω			
R7	10meg			
R8	150K			
R9	1meg			
R10	3300Ω			
R11	220K			
R12	1meg			
R13	3300Ω			
R14	220K			
R15	270K			
R16	470Ω 1W			
R17	47K			
R18	56K			
R19	22K 1W			
R20	10K 1W			
R21	1meg			
R22	1meg			

COILS (RF-IF)

ITEM No.	USE	REPLACEMENT DATA					NOTES
		PHILMORE PART No.	Merit PART No.	Miller PART No.	Stancor PART No.	Workman PART No.	
L1	RF Coil	TC1033					* Wound on 3300Ω 1W
L2	Rec. Tuning (1.5uh)	TC1034					
L3	Rec. Tuning (1.5uh)	TC1034					
L4	Rec. Tuning. (1.5uh)	TC1034					
L5	Cath. Choke (37uh)	TC1030*					
L6	RF Choke (75uh)	TC1031					
L7	Transmit Osc. (2.5uh)	TC1035					
L8	Final	TC1033					
L9	Ant. Load (1.3uh)	TC1036					

FILTER CHOKE

ITEM No.	RATINGS			REPLACEMENT DATA					NOTES
	CURRENT (Measured)	DC RES.	INDUCTANCE (0 CURRENT 1000~)	PHILMORE PART No.	MERIT PART No.	STANCOR PART No.	THORDARSON PART No.	TRIAD PART No.	
L10	.055A	235Ω	8HY	TC1102					

TRANSFORMER (POWER)

ITEM No.	RATING			REPLACEMENT DATA					NOTES
	PRI.	SEC. 1	SEC. 2	PHILMORE PART No.	MERIT PART No.	STANCOR PART No.	THORDARSON PART No.	TRIAD PART No.	
T1	117V ⓐ .38A	480VCT ⓐ .035A	6.3V ⓐ 2.3A	TC1101					

TRANSFORMER (AUDIO OUTPUT)

ITEM No.	IMPEDANCE		REPLACEMENT DATA					NOTES
	PRI.	SEC.	PHILMORE PART No.	Merit PART No.	Stancor PART No.	Thordarson PART No.	Triad PART No.	
T2	500Ω	3-4Ω	TC1032					

PARTS LIST AND DESCRIPTIONS (Continued)

SPEAKER

ITEM No.	TYPE			REPLACEMENT DATA		NOTES
	SIZE	FIELD	V. C. IMP.	PHILMORE PART No.	QUAM PART No.	
SP1	3 1/2"	PM	3-4Ω	TC1038	3A07	

FUSES

ITEM No.	TYPE	RATING	REPLACEMENT DATA					
			PHILMORE PART No.		LITTELFUSE PART No.		BUSS PART No.	
			FUSE	HOLDER	FUSE	HOLDER	FUSE	HOLDER
M1	3AG	2A 250V	TC1110	TC1104	312002 (3AG 2A 250V)	155020	AGC 2	HKP

MISCELLANEOUS

ITEM No.	PART NAME	PHILMORE PART No.	NOTES
M2	Crystal	TC1037	Transmit
M3	Switch	TC1041	Receive Channel Selector (4-Pole, 3-Position)
M4	Switch	TC1041	Transmit Channel Selector (4-Pole, 3-Position)
M5	Switch	TC1040	Receive-Transmit (#1882-J 4-Pole, 2-Position)
	Microphone	TC1039	

CABINETS & CABINET PARTS

(When Ordering Cabinets & Cabinet Parts, Specify Model, Chassis & Color)

NAME	PART NO.	DESCRIPTION
Knob	TC1063	With Line
Knob	TC1064	Receive-Transmit
Panel	TC1058	With Cabinet Bottom
Cabinet Cover	TC1062	

MODEL TC-612W POWER SUPPLY MODEL TC-612W

TUBES

◆ AMPEREX ◆			◆ GENERAL ELECTRIC ◆	RCA ◆	RAYTHEON ◆	SYLVANIA ◆
ITEM No.	USE	TYPE	ITEM No.	USE	TYPE	
V6	Rectifier	6X4				

ELECTROLYTIC CAPACITORS

ITEM No.	RATING		REPLACEMENT DATA						
	CAP.	VOLT.	PHILMORE PART No.	AEROVOX PART No.	CORNELL-DUBILIER PART No.	GENERAL ELECTRIC PART No.	MALLORY PART No.	PYRAMID PART No.	SPRAGUE PART No.
C29A	▲20	450							
B	■20	450							
C	▲20	450	TC1100	AFH4-67	D0520	XC4-48	FP430.97	TMQ-4514	TVL-4724.2
D	20	25							

FIXED CAPACITORS

ITEM No.	RATING	REMARKS	REPLACEMENT DATA					
			AEROVOX PART No.	CENTRALAB PART No.	CORNELL-DUBILIER PART No.	ELMENCO PART No.	MALLORY PART No.	SPRAGUE PART No.
C30	.47 100V		BF2P47		CUB2P47	2CP-6-474	GEM-2047	2PS-P47
C31	.0047 3KV			DD30-472			3HV-247	30GA-D47
C32	.01		BPD-01	DD-103	BYA10S1	CCD-103	GP110	5GA-S10
C33	.01		BPD-01	DD-103	BYA10S1	CCD-103	GP110	5GA-S10
C34	.01		BPD-01	DD-103	BYA10S1	CCD-103	GP110	5GA-S10
C35	.01		BPD-01	DD-103	BYA10S1	CCD-103	GP110	5GA-S10

RESISTORS

All wattages 1/2 watt, or less, unless otherwise listed.

ITEM No.	RATING	REPLACEMENT DATA			ITEM No.	RATING	REPLACEMENT DATA		
		IRC PART No.	WORKMAN PART No.	REMARKS			IRC PART No.	WORKMAN PART No.	REMARKS
R23	47Ω 1W				R24	4700Ω			

COILS (RF-IF)

ITEM No.	USE	REPLACEMENT DATA					NOTES
		PHILMORE PART No.	Merit PART No.	Miller PART No.	Stancor PART No.	Workman PART No.	
L11	RF Choke (1.1MH)	TC6107					
L12	Hash Choke (3uh)	TC6106					

FILTER CHOKE

ITEM No.	RATINGS			REPLACEMENT DATA						NOTES
	CURRENT (Measured)	DC RES.	INDUCTANCE (0 CURRENT 1000~)	PHILMORE PART No.	MERIT PART No.	STANCOR PART No.	THORDARSON PART No.	TRIAD PART No.		
L13	.040A	235Ω	8HY	TC1102						

TRANSFORMER (POWER)

ITEM No.	RATING			REPLACEMENT DATA					NOTES
	PRI.	SEC. 1	SEC. 2	PHILMORE PART No.	MERIT PART No.	STANCOR PART No.	THORDARSON PART No.	TRIAD PART No.	
T3	12.6VDC @ 3.2A (or) 6.3VDC @ 3.7A	660VAC @ .040A		TC6105					

VIBRATOR

ITEM No.	TYPE	INPUT VOLTS	FRE-QUENCY	REPLACEMENT DATA			NOTES
				PHILMORE PART No.	CORNELL-DUBILIER PART No.	MALLORY PART No.	
M6	Interruptor	6 or 12V	115~	TC6112		1501	

FUSES

ITEM No.	TYPE	RATING	REPLACEMENT DATA					
			PHILMORE PART No.		LITTELFUSE PART No.		BUSS PART No.	
			FUSE	HOLDER	FUSE	HOLDER	FUSE	HOLDER
M7	3AG	8A 32V	TC6102	TC1104	312008 (3AG 8A 32V)	155020	AGC 8	HKP

WIRING DATA

General-use Hook-up Wire .... Use BELDEN No. 8530 (Solid) Available in 12 Colors
8524 (Stranded) Available in 12 Colors)
Shielded Antenna Lead ..... Use BELDEN No. 8214 Lowest Loss (RG-8/U Type)
8237 Low Loss (RG-8/U)
8240 (Solid) Miniature (RG-58/U)
8259 (Stranded) Miniature (RG-58A/U)
Coiled Microphone Cable ..... Use BELDEN No. 8499 Single Conductor Shielded (Neoprene)
8498 Single Conductor Shielded (Vinyl)
Ignition Noise Suppression .... Use BELDEN No. 7300-Series Spark-Plug Sets
Bonding Strap ..... Use BELDEN No. 8661 (3/8 In.)

PHOTOFACT® Folder

POLY-COMM MODELS PC-N-6, PC-N-12

MODEL PC-N-12

TRADE NAME	Poly-Comm Models PC-N-6, PC-N-12
MANUFACTURER	Polytronics Labratory Inc., 388 Getty Ave., Clifton, N. J.
TYPE SET	AC-Battery Operated 11 Tube Citizens Band Transmitter-Receiver
POWER SUPPLY	110 — 120 Volts AC, 60 Cycles (or) 6 Volt Storage Battery (or) 12 Volt Storage Battery
RATING	Receive: 60 Watts, .55Amp. @117 Volts AC; 4.2Amp. @12.6 Volts DC; 8.4Amp. @6.3 Volts DC — Transmit: 80 Watts, .70 Amp. @117 Volts AC; 5.6 Amp. @12.6 Volts DC; 11.2 Amp. @6.3 Volts DC
TUNING RANGE	Any 4 of Citizens Band Channels 1 thru 22

POLY-COMM MODELS PC-N-6, PC-N-12

NOTICE

ONLY THOSE PERSONS PROPERLY LICENSED ARE PERMITTED TO MAKE REPAIRS OR ADJUSTMENTS WHICH MAY RESULT IN ILLEGAL OPERATION. (REFER TO FCC RULES & REGULATIONS PART 19, SUBPART D, SECTION 19.71.)

HOWARD W. SAMS & CO., INC. Indianapolis 6, Indiana

LY768

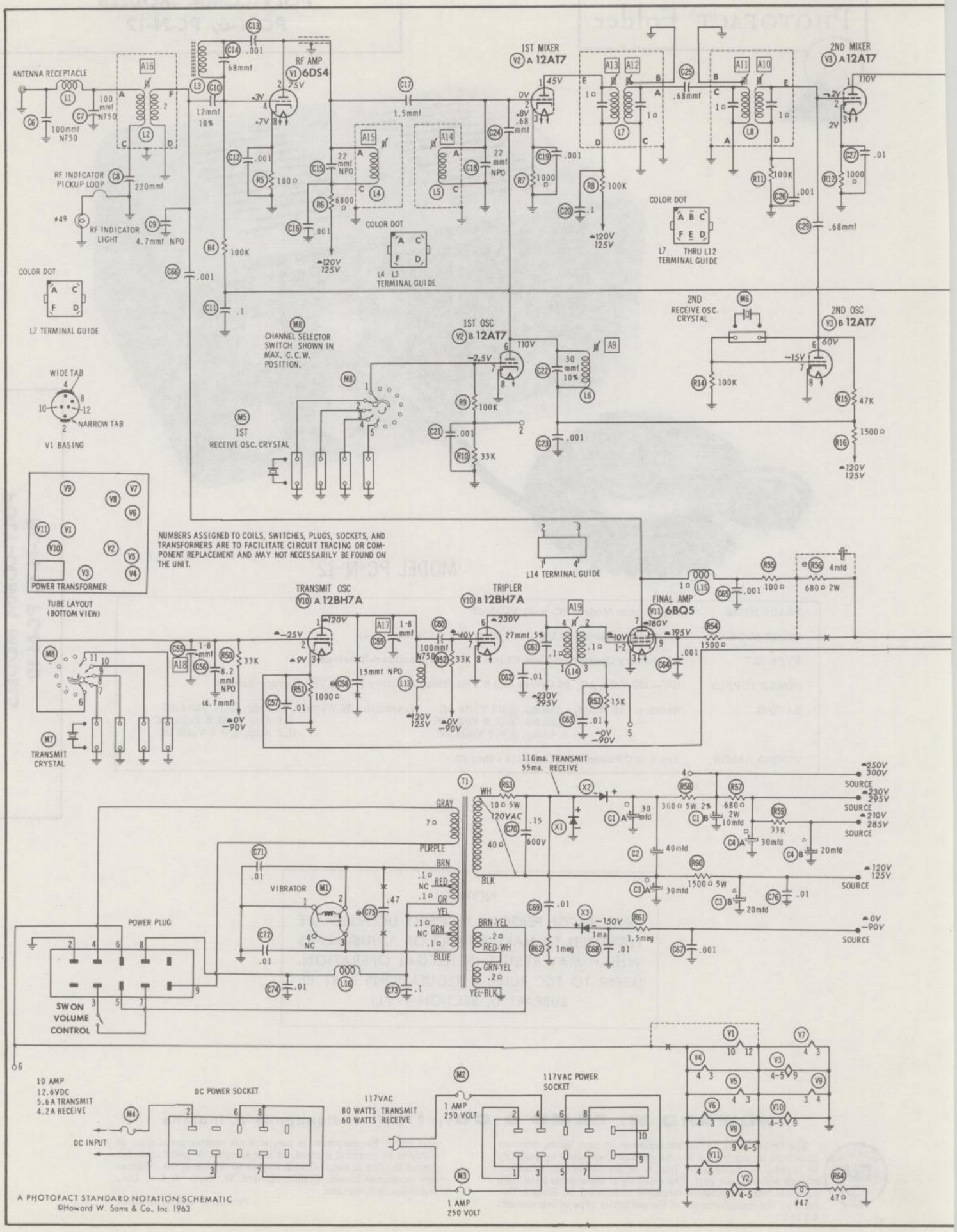
ANTENNA RECEPTACLE
RF AMP V1 6DS4
1ST MIXER V2 A 12AT7
2ND MIXER V3 A 12AT7
RF INDICATOR PICKUP LOOP
RF INDICATOR LIGHT
COLOR DOT
L2 TERMINAL GUIDE
L4 L5 TERMINAL GUIDE
L7 THRU L12 TERMINAL GUIDE
CHANNEL SELECTOR SWITCH SHOWN IN MAX. C.C.W. POSITION.
1ST OSC V2 B 12AT7
2ND OSC V3 B 12AT7
1ST RECEIVE OSC. CRYSTAL
2ND RECEIVE OSC. CRYSTAL
WIDE TAB
NARROW TAB
V1 BASING
POWER TRANSFORMER
TUBE LAYOUT (BOTTOM VIEW)
NUMBERS ASSIGNED TO COILS, SWITCHES, PLUGS, SOCKETS, AND TRANSFORMERS ARE TO FACILITATE CIRCUIT TRACING OR COMPONENT REPLACEMENT AND MAY NOT NECESSARILY BE FOUND ON THE UNIT.
L14 TERMINAL GUIDE
TRANSMIT OSC V10 A 12BH7A
TRIPLER V10 B 12BH7A
FINAL AMP V11 6BQ5
TRANSMIT CRYSTAL
110ma. TRANSMIT
55ma. RECEIVE
VIBRATOR
POWER PLUG
SW ON VOLUME CONTROL
10 AMP
12.6VDC
5.6A TRANSMIT
4.2A RECEIVE
DC POWER SOCKET
DC INPUT
117VAC
80 WATTS TRANSMIT
60 WATTS RECEIVE
1 AMP 250 VOLT
117VAC POWER SOCKET
A PHOTOFACT STANDARD NOTATION SCHEMATIC
©Howard W. Sams & Co., Inc 1963

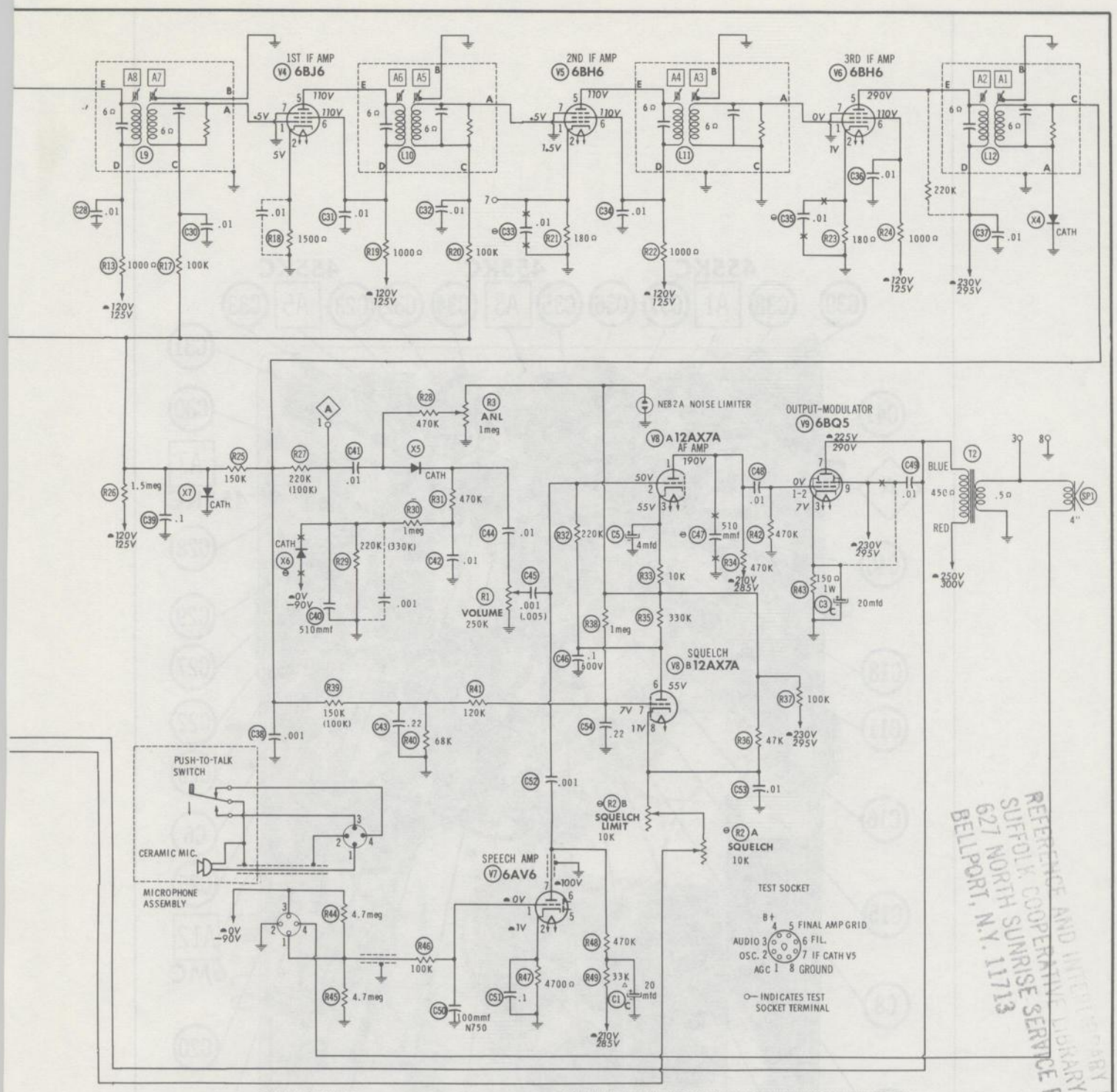

RESISTANCE READINGS

ITEM	TUBE	Pin 1	Pin 2	Pin 3	Pin 4	Pin 5	Pin 6	Pin 7	Pin 8	Pin 9
V1	6DS4		†8300Ω		468K				100Ω	
V2	12AT7	†100K	0Ω	1000Ω	FIL	FIL	†3000Ω	133K	0Ω	FIL
V3	12AT7	†2500Ω	100K	1000Ω	FIL	FIL	†50K	100K	0Ω	FIL
V4	6BJ6	450K	1500Ω	FIL	FIL	†2500Ω	†2500Ω	0Ω		
V5	6BH6	450K	180Ω	FIL	FIL	†2500Ω	†2500Ω	0Ω		
V6	6BH6	6Ω	180Ω	FIL	FIL	†1000Ω	†2500Ω	0Ω		
V7	6AV6	4.8meg	4700Ω	FIL	FIL	NC	NC	†530K		
V8	12AX7A	†500K	†650K	1meg	FIL	FIL	†430K	188K	16K	FIL
V9	6BQ5	NC	470K	150Ω	FIL	FIL	NC	†750Ω	NC	†1000Ω
V10	12BH7A	†1500Ω	⁃33K	1000Ω	FIL	FIL	†1000Ω	⁃33K	0Ω	FIL
V11	6BQ5	NC	⁃15K	0Ω	FIL	FIL	NC	†2000Ω	NC	†2200Ω

ALL READINGS MADE IN "RECEIVE" POSITION UNLESS OTHERWISE DESIGNATED.
⁃ TAKEN IN "TRANSMIT" POSITION, SQUELCH CONTROL FULLY CLOCKWISE. NC NO CONNECTION
† MEASURED FROM OUTPUT OF X2. † MEASURED FROM JUNCTION OF R60, C3A.

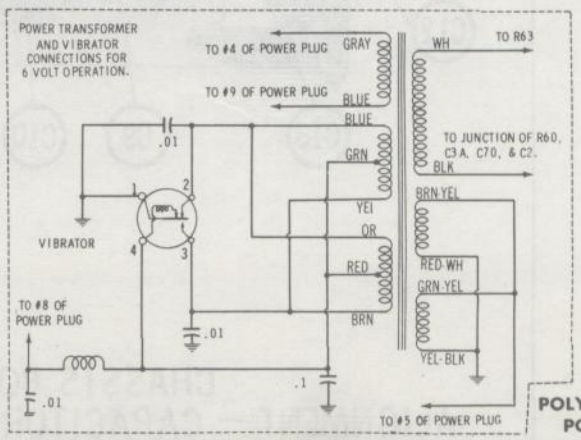

POLY-COMM MODELS PC-N-6, PC-N-12

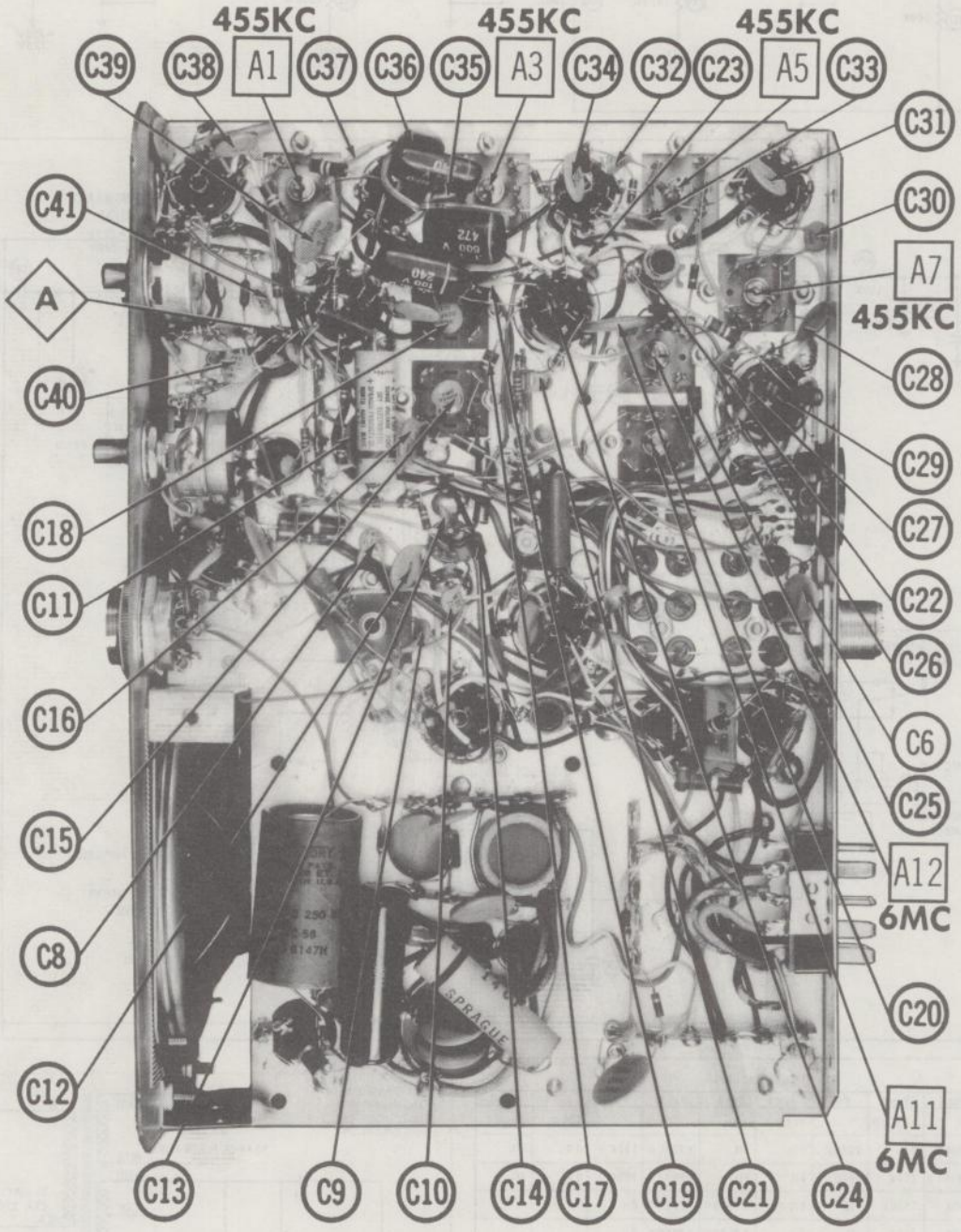

CHASSIS BOTTOM VIEW
ALIGNMENT – CAPACITOR IDENT. (C6, C8 THRU C41)

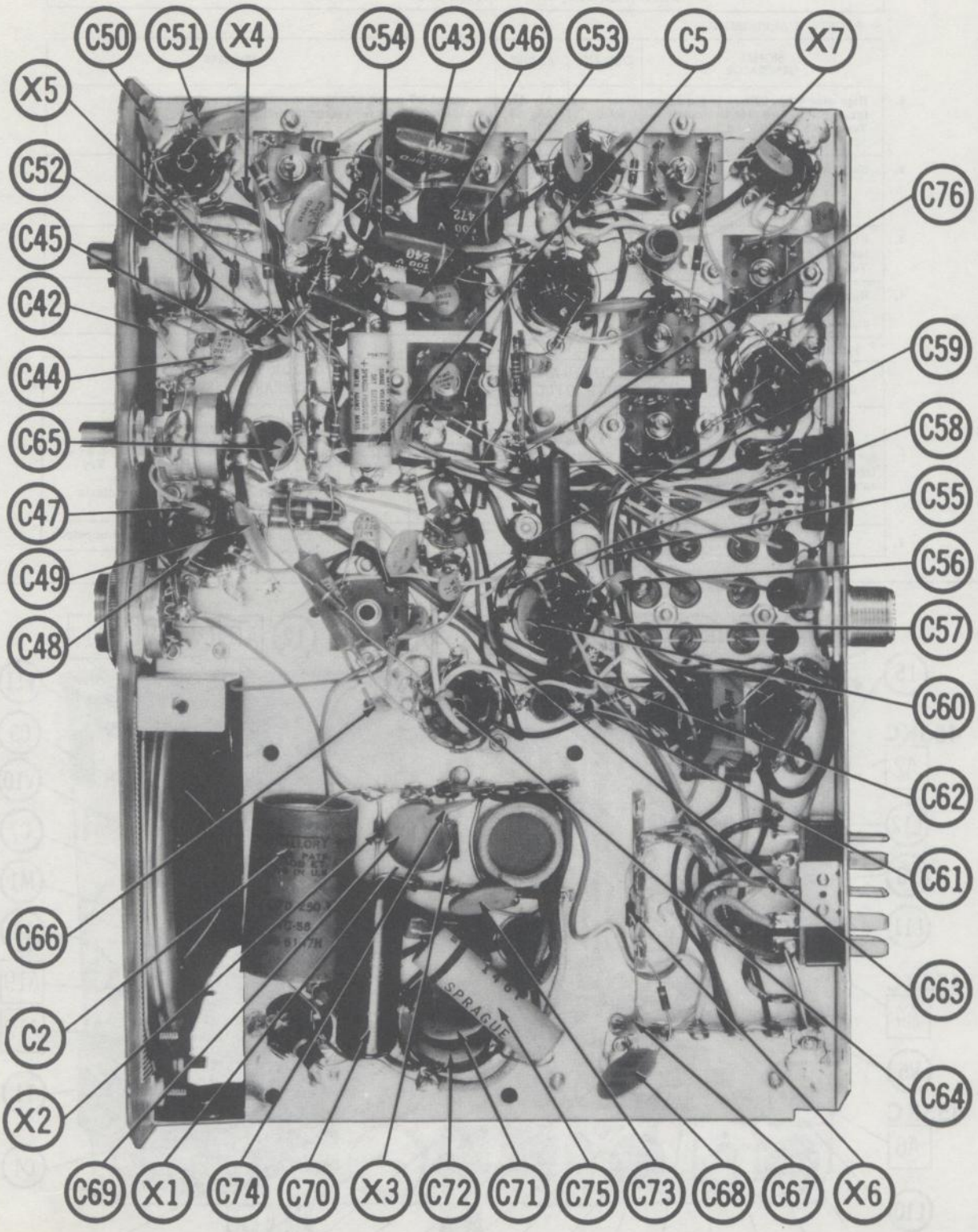

CHASSIS – BOTTOM VIEW
DIODE & CAPACITOR IDENT. (C2, C5, C42 THRU C76)

ALIGNMENT INSTRUCTIONS

ALIGNMENT INSTRUCTIONS—READ CAREFULLY BEFORE ATTEMPTING ALIGNMENT
Best results will be obtained when adjusting A16 if the antenna normally used is connected and the chassis is as nearly in the cabinet as possible. Suggested Alignment Tools: A1 thru A19.....GENERAL CEMENT #5000, 5003, 5066, 8271, 8272, 8276, 8277, 8290, 8609, 8722, 9150, 9298 WALSCO #2515, 2516, 2518, 2519, 2525, 2541

RECEIVER ALIGNMENT

	SIGNAL GENERATOR	CHANNEL	ADJUST	REMARKS
1.	High side thru .001mfd to pin 2 (grid) of V3, low side to chassis. Tune to 455KC (Unmod.)	Near Center Channel	A1, A2, A3, A4, A5, A6, A7, A8	Connect DC probe of VTVM to point Ⓐ, common to chassis. Adjust for maximum deflection.
2.	Not Used.	"	A9	Connect DC probe of VTVM to pin 7 of V2, common to chassis. Adjust A9 for maximum deflection. Rock A9 to each side of peak. Note rate of dropoff. Set just below peak on side of gradual dropoff.
3.	High side thru .001mfd to pin 2 (grid) of V2, low side to chassis. Tune to 6MC (Unmod.)	"	A10, A11, A12, A13	Connect DC probe of VTVM to point Ⓐ, common to chassis. Adjust for maximum deflection.
4.	High side to antenna terminal, low side to chassis. Tune to channel frequency.	"	A14, A15, A16	Connect DC probe of VTVM to point Ⓐ, common to chassis. Adjust for maximum deflection.

TRANSMITTER ALIGNMENT

ONLY THOSE PERSONS PROPERLY LICENSED ARE PERMITTED TO MAKE REPAIRS OR ADJUSTMENTS WHICH MAY RESULT IN ILLEGAL OPERATION. (REFER TO FCC RULES & REGULATIONS PART 19, SUBPART D, SECTION 19.71)

	SPECIAL INSTRUCTIONS	INDICATOR	ADJUST	REMARKS
1.	Set channel selector near center frequency. Connect dummy load or antenna.	RF wattmeter and front panel. Transmitter indicator light.	A17, A18	Connect common probe of VTVM to pin 2 (Grid) of V2. DC probe to chassis, Key transmitter. Adjust A17 and A18 for maximum output. VTVM should indicate -25 V. Disconnect VTVM.
2.	"	"	A19	Key Transmitter. Adjust for maximum output.

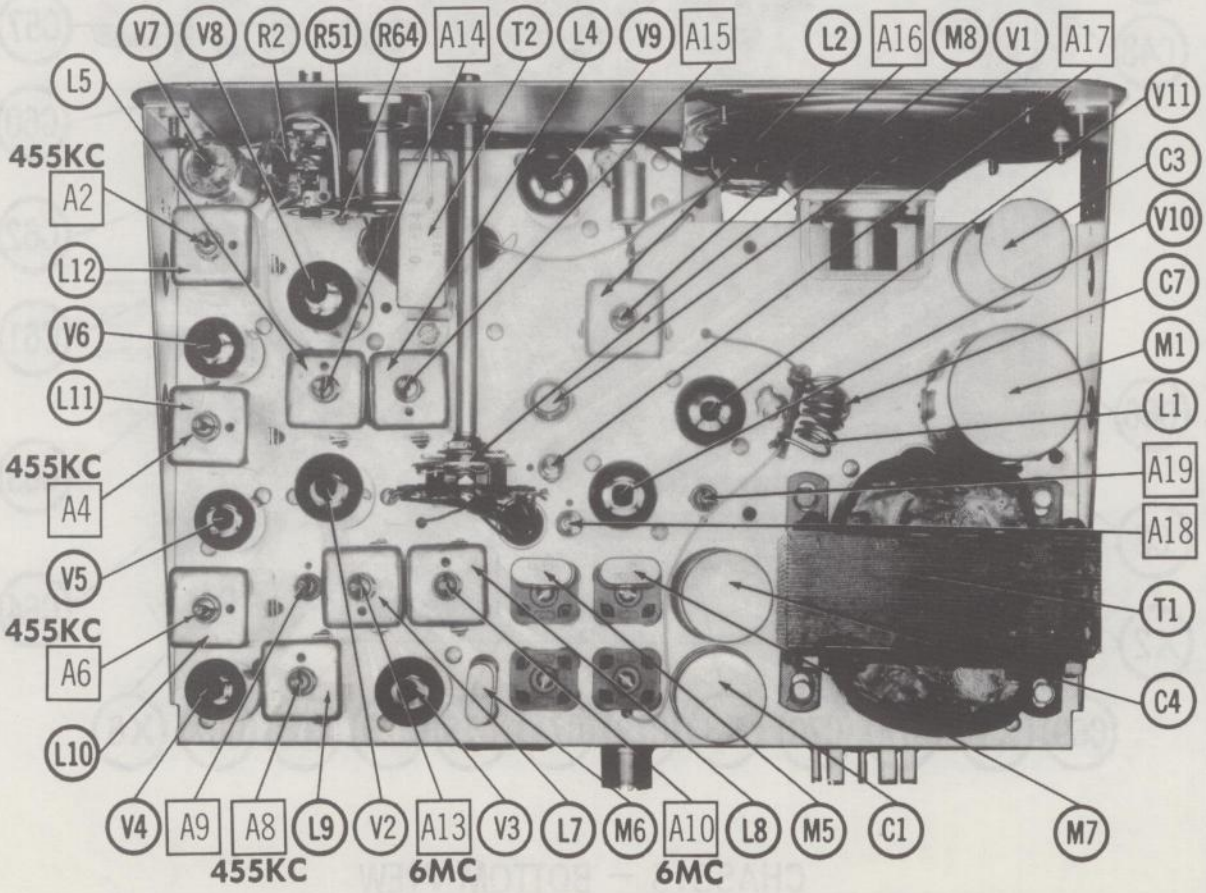

CHASSIS—TOP VIEW

PARTS LIST AND DESCRIPTION

TUBES

ITEM No.	USE	TYPE	ITEM No.	USE	TYPE
V1	RF Amp.	6DS4	V7	Speech Amp.	6AV6
V2	1st Mixer-Osc.	12AT7	V8	AF Amp.-Squelch	12AX7A
V3	2nd Mixer-Osc.	12AT7	V9	Output-Modulator	6BQ5
V4	1st IF Amp.	6BJ6	V10	Trans. Osc.-Tripler	12BH7A
V5	2nd IF Amp.	6BH6	V11	Final Amp.	6BQ5
V6	3rd IF Amp.	6BH6			

◆ AMPEREX ◆ GENERAL ELECTRIC ◆ RCA ◆ RAYTHEON ◆ SYLVANIA ◆

POWER RECTIFIERS & SIGNAL DIODES

ITEM No.	CURRENT RATING (Measured)	ORIGINAL Part or Type No.	RECTIFIERS: RCA PART No.	RECTIFIERS: SARKES TARZIAN PART No.	DIODES	NOTES
X1	.110A	PA071	1N3195	F6		HV Rectifier
X2	.090A	PA071	1N3195	F6		HV Rectifier
X3	.001A	PA071	1N3194	10		Bias
X4		HD6226				Detector
X5		HD6226				ANL.
X6		HD6226				ANL. (Not used in some versions)
X7		HD6226				AVC

ELECTROLYTIC CAPACITORS

ITEM No.	RATING CAP.	RATING VOLT.	Poly-Comm PART No.	AEROVOX PART No.	CORNELL-DUBILIER PART No.	GENERAL ELECTRIC PART No.	MALLORY PART No.	PYRAMID PART No.	SPRAGUE PART No.
C1A	■ 30	350							
B	10	350		AFH3-28-30	C0225	XC3-11	FP330.7		TVL-3639.8
C	▲ 20	350							
C2	40	250		PRS1580	BR40-250	QT1-14	TC58	TD-40-250	TVA-1511
C3A	■ 30	350							
B	▲ 20	350		AFH3-109	C0830	XC3-25	FP330	TMT3361	TVL-3636
C	20	25							
C4A	■ 30	350							
B	▲ 20	350		AFH3-109	C0830	XC3-25	FP330	TMT3361	TVL-3636
C	20	25							
C5	4	150		PRS1400	BBR4-150	QT1-3	TC40	TD-4-150	TVA-1402

FIXED CAPACITORS

ITEM No.	RATING	REMARKS	AEROVOX PART No.	CENTRALAB PART No.	CORNELL-DUBILIER PART No.	ELMENCO PART No.	MALLORY PART No.	SPRAGUE PART No.
C6	100 N750		N750-DI 100	TCN-100	C10T1U	CCTN-101	CN7-310	10TCU-T10
C7	100 N750		N750-DI 100	TCN-100	C10T1U	CCTN-101	CN7-310	10TCU-T10
C8	220		DI-220	DD-221	L10T22	CCD-221	GP322	10TS-T22
C9	4.7 NPO		NPO-DI 4.7	TCZ-4.7	C10V47C	CCTC-4R7	CNO-547	10TCC-V47
C10	12 10%		DI-12	DD-120	L10Q12	CCD-120	GP412	10TS-Q12
C11	.1 100V		TTD-1	DF-104	CUB2P1	1DP-2-104	GEM-201	2PS-P10
C12	.001		DI-1000	DD-102	L10D1	CCD-102	GP210	10TS-D10
C13	.001		DI-1000	DD-102	L10D1	CCD-102	GP210	10TS-D10
C14	68		DI-68	DD-680	L10Q68	CCD-680	GP468	10TS-Q68
C15	22 NPO		NPO-DI 22	TCZ-22	C10Q22C	CCTC-22	CNO-422	10TCC-Q22
C16	.001		DI-1000	DD-102	L10D1	CCD-102	GP210	10TS-D10
C17	1.5		NPO-SI 1.5	TCZ-1R5	C10V15C		CNO-515	10TCC-V15
C18	22 NPO		NPO-DI 22	TCZ-22	C10Q22C	CCTO-22	CNO-422	10TCC-Q22
C19	.001		DI-1000	DD-102	L10D1	CCD-102	GP210	10TS-D10
C20	.1 500V			DF-104	CUB6P1	6DP-4-104	GEM-601	6PS-P10
C21	.001		DI-1000	DD-102	L10D1	CCD-102	GP210	10TS-D10
C22	30 10%		ADM-15-300	DD-300	L10Q3	CCD-300	GP430	10TS-Q30
C23	.001		DI-1000	DD-102	L10D1	CCD-102	GP210	10TS-D10
C24	.68		NPO-SI .68	TCZ-R68				
C25	.68		NPO-SI .68	TCZ-R68				
C26	.001		DI-1000	DD-102	L10D1	CCD-102	GP210	10TS-D10
C27	.01 100V		BPD-01	DD-103	BYA10S1	CCD-103	GP110	10TS-S10
C28	.01		BPD-01	DD-103	BYA10S1	CCD-103	GP110	10TS-S10

FIXED CAPACITORS (cont)

ITEM No.	RATING	REMARKS	AEROVOX PART No.	CENTRALAB PART No.	CORNELL-DUBILIER PART No.	ELMENCO PART No.	MALLORY PART No.	SPRAGUE PART No.
C29	.68		NPO-SI .68	TCZ-R68				
C30	.01		BPD-01	DD-103	BYA10S1	CCD-103	GP110	10TS-S10
C31	.01		BPD-01	DD-103	BYA10S1	CCD-103	GP110	10TS-S10
C32	.01		BPD-01	DD-103	BYA10S1	CCD-103	GP110	10TS-S10
C33	.01	Note 1	BPD-01	DD-103	BYA10S1	CCD-103	GP110	10TS-S10
C34	.01		BPD-01	DD-103	BYA10S1	CCD-103	GP110	10TS-S10
C35	.01	Note 1	BPD-01	DD-103	BYA10S1	CCD-103	GP110	10TS-S10
C36	.01		BPD-01	DD-103	BYA10S1	CCD-103	GP110	10TS-S10
C37	.01		BPD-01	DD-103	BYA10S1	CCD-103	GP110	10TS-S10
C38	.001		DI-1000	DD-102	L10D1	CCD-102	GP210	10TS-D10
C39	.1		TTD-1	DF-104	CUB2P1	1DP-2-104	GEM-201	2PS-P10
C40	510		DI-500	DD-511	L10T51	CCD-501	GP350	10TS-T50
C41	.01		BPD-01	DD-103	BYA10S1	CCD-103	GP110	10TS-S10
C42	.01		BPD-01	DD-103	BYA10S1	CCD-103	GP110	10TS-S10
C43	.22 100V		P188N-22		CUB2P22	1DP-3-224	GEM-2022	2PS-P22
C44	.01		BPD-01	DD-103	BYA10S1	CCD-103	GP110	10TS-S10
C45	.001	(.005) †	DI-1000	DD-102	L10D1	CCD-102	GP210	10TS-D10
C46	.1 600V		P688N-1	DF-104	CUB6P1	6DP-4-104	GEM-601	6PS-P10
C47	510	Note 1	DI-500	DD-511	L10T51	CCD-501	GP350	10TS-T50
C48	.01		BPD-01	DD-103	BYA10S1	CCD-103	GP110	10TS-S10
C49	.01		BPD-01	DD-103	BYA10S1	CCD-103	GP110	10TS-S10
C50	100 N750		N750-DI 100	TCN-100	C10T1U	CCTN-101	CN7-310	10TCU-T10
C51	.1		TTD-1	DF-104	CUB2P1	1DP-2-104	GEM-201	2PS-P10
C52	.001		DI-1000	DD-102	L10D1	CCD-102	GP210	10TS-D10
C53	.01		BPD-01	DD-103	BYA10S1	CCD-103	GP110	10TS-S10
C54	.22 100V		P188N-22		CUB2P22	1DP-3-224	GEM-2022	2PS-P22
C55	1-8							
C56	8.2 NPO	(4.7) †	NPO-DI 8.2		C10V82C			10TCC-V22
C57	.01		BPD-01	DD-103	BYA10S1	CCD-103	GP110	10TS-S10
C58	15 NPO	Note 2	NPO-DI 15	TCZ-15	C10Q15C	CCTC-150	CNO-415	10TCC-Q15
C59	1-8							
C60	100 N750		N750-DI 100	TCN-100	C10T1U	CCTN-101	CN7-310	10TCU-T10
C61	27 5%		CI-27	TCZ-27	C10Q27C	CCD-270	CNO-427	10TCC-Q27
C62	.01		BPD-01	DD-103	BYA10S1	CCD-103	GP110	10TS-S10
C63	.01		BPD-01	DD-103	BYA10S1	CCD-103	GP110	10TS-S10
C64	.001		DI-1000	DD-102	L10D1	CCD-102	GP210	10TS-D10
C65	.001		DI-1000	DD-102	L10D1	CCD-102	GP210	10TS-D10
C66	.001		DI-1000	DD-102	L10D1	CCD-102	GP210	10TS-D10
C67	.001		DI-1000	DD-102	L10D1	CCD-102	GP210	10TS-D10
C68	.01		BPD-01	DD-103	BYA10S1	CCD-103	GP110	10TS-S10
C69	.01		BPD-01	DD-103	BYA10S1	CCD-103	GP110	10TS-S10
C70	.15 600V		P688N-15			6DP-5-154	GEM-6015	6PS-P15
C71	.01		BPD-01	DD-103	BYA10S1	C D-103	GP110	10TS-S10
C72	.01		BPD-01	DD-103	BYA10S1	CCD-103	GP110	10TS-S10
C73	.1		TTD-1	DF-104	CUB2P1	1DP-2-104	GEM-201	2PS-P10
C74	.01		BPD-01	DD-103	BYA10S1	CCD-103	GP110	10TS-S10
C75	.47 200V		P288N-47		CUB2P47	2DP-5-474	GEM-2047	2PS-P47
C76	.01		BPD-01	DD-103	BYA10S1	CCD-103	GP110	10TS-S10

Note 1. Not used in some versions.
† Alternate Value.
Note 2. Not used if 13MC Series crystal are used.

CONTROLS

All wattages 1/2 watt, or less, unless otherwise listed.

ITEM No.	USE	RESISTANCE	Poly-Comm PART No.	CENTRALAB PART No.	CLAROSTAT PART No.	CTS-IRC PART No.	MALLORY PART No.
R1	Volume & Switch	250K	LC250MPOAC	B-51, KR-1 or F2-250K, KR-1, SU204)	A47-250K-Z, SWE-12, RS-2	Q13-130, 76-1, or (BU2, CF23, SS1, GC)*	U44, US-26, or (UA254A, US-41, SL2500)
R2A	Squelch Control	10K					
B	Squelch Control	10K ①					
R3	ANL	1meg		F1-1meg, SS008		Q11-137, (BU1, CF17, SS1, DC1)*	U-54, (UA16L, SL2500)

① Some versions may use 5000Ω in this application.
* "Snaptrol."

PARTS LIST AND DESCRIPTION (CONTINUED)

RESISTORS

All wattages 1/2 watt, or less, unless otherwise listed.

ITEM No.	RATING	REPLACEMENT DATA		
		IRC PART No.	WORKMAN PART No.	REMARKS
R4	100K			
R5	100Ω			
R6	6800Ω			
R7	1000Ω			
R8	100K			
R9	100K			
R10	33K			
R11	100K			
R12	1000Ω			
R13	1000Ω			
R14	100K			
R15	47K			
R16	1500Ω			
R17	100K			
R18	1500Ω			
R19	1000Ω			
R20	100K			
R21	180Ω			
R22	1000Ω			
R23	180Ω			
R24	1000Ω			
R25	150K			
R26	1.5meg			
R27	220K			(100K) †
R28	470K			
R29	220K			(330K) †
R30	1meg			
R31	470K			
R32	220K			
R33	10K			
R34	470K			

ITEM No.	RATING	REPLACEMENT DATA		
		IRC PART No.	WORKMAN PART No.	REMARKS
R35	330K			
R36	47K			
R37	100K			
R38	1meg			
R39	150K			(100K) †
R40	68K			
R41	120K			
R42	470K			
R43	150Ω 1W			
R44	4.7meg			
R45	4.7meg			
R46	100K			
R47	4700Ω			
R48	470K			
R49	33K			
R50	33K			
R51	1000Ω			
R52	33K			
R53	15K			
R54	1500Ω			
R55	100Ω			
R56	680Ω 2W			Note 1
R57	680Ω 2W			
R58	300Ω 5% 5W	PW5-300	5W-SQ-300	
R59	33K			
R60	1500Ω 5W	PW5-1500	5W-SQ-1500	
R61	1.5meg			
R62	1meg			
R63	10Ω 5W	PW5-10	5W-SQ-10	
R64	47Ω			

Note 1. Value varies, selected for 4.9 Watts input. † Alternate Value.

COILS (RF-IF)

ITEM No.	USE	REPLACEMENT DATA					NOTES
		Poly-Comm PART No.	Merit PART No.	Miller PART No.	Stancor PART No.	Workman PART No.	
L1	Harmonic Filter						
L2	Ant.	P100C					
L3	Choke						
L4	RF	P101C					
L5	RF	P101C					
L6	Osc. Plate						
L7	1st 6MC IF	P101C					
L8	2nd 6MC IF	P101C					
L9	1st 455KC IF	P104E					
L10	2nd 455KC IF	P104E					
L11	3rd 455KC IF	P104E					
L12	4th 455KC IF	P104E					
L13	Plate Choke						
L14	Tripler Plate						
L15	Final Plate						
L16	Hash Choke	4-16854-1					

TRANSFORMER (POWER)

ITEM No.	RATING			REPLACEMENT DATA					NOTES
	PRI.	SEC. 1	SEC. 2	Poly-Comm PART No.	MERIT PART No.	STANCOR PART No.	THORDARSON PART No.	TRIAD PART No.	
T1	117VAC @ .55A (.7A*) or 12.6VDC @ 2.4A (3.8A*)	120VAC @ .260A (.41A*)	6.3VAC @ 1.8A	P128D					* Transmit
	SEC. 3								
	6.3VAC @ 1.8A								

TRANSFORMER (AUDIO OUTPUT)

ITEM No.	IMPEDANCE		REPLACEMENT DATA					NOTES
	PRI.	SEC.	Poly-Comm PART No.	Merit PART No.	Stancor PART No.	Thordarson PART No.	Triad PART No.	
T2	5000Ω	3-4Ω	OT-246					

SPEAKER

ITEM No.	TYPE			REPLACEMENT DATA		NOTES
	SIZE	FIELD	V. C. IMP.	Poly-Comm PART No.	QUAM PART No.	
SP1	4"	PM	3-4Ω	4C921	4A07	

VIBRATOR

ITEM No.	TYPE	INPUT VOLTS	FRE-QUENCY	REPLACEMENT DATA			NOTES
				Poly-Comm PART No.	CORNELL-DUBILIER PART No.	MALLORY PART No.	
M1	Interrupter	12V	115~		G8801	G1601	Model PC-N-12
	Interrupter	6V	115~		1601	1601	Model PC-N-6

FUSES

ITEM No.	TYPE	RATING	REPLACEMENT DATA					
			Poly-Comm PART No.		LITTELFUSE PART No.		BUSS PART No.	
			FUSE	HOLDER	FUSE	HOLDER	FUSE	HOLDER
M2	AGC	1A 250V			312001. (AGC 1A 250V)		AGC 1	
M3	AGC	1A 250V			312001. (AGC 1A 250V)		AGC 1	
M4	AGC	10A			311010. (AGC 10A)	155020	AGC 10	HDJ-B

MISCELLANEOUS

ITEM No.	PART NAME	Poly-Comm PART No.	NOTES
M5	Crystal		Receive Osc. (Specify Channel and Frequency Desired)
M6	Crystal		Receive Osc. (5545KC)
M7	Crystal		Transmit (Specify Channel and Frequency Desired)
M8	Switch		Channel Selector

WIRING DATA

General-use Hook-up Wire .... Use BELDEN No. 8530 (Solid) Available in 12 Colors
8524 (Stranded) Available in 12 Colors
Shielded Antenna Lead ..... Use BELDEN No. 8214 Lowest Loss (RG-8/U Type)
8237 Low Loss (RG-8/U)
8240 (Solid) Miniature (RG-58/U)
8259 (Stranded) Miniature (RG-58A/U)
Coiled Microphone Cable ..... Use BELDEN No. 8497 3 Conductor- 1 Shielded for Press-to-Talk (Neoprene)
8496 3 Conductor- 1 Shielded for Press-to-Talk (Vinyl)
Ignition Noise Suppression .... Use BELDEN No. 7300-Series Spark-Plug Sets
Bonding Strap ..... Use BELDEN No. 8661 (3/8 In.)

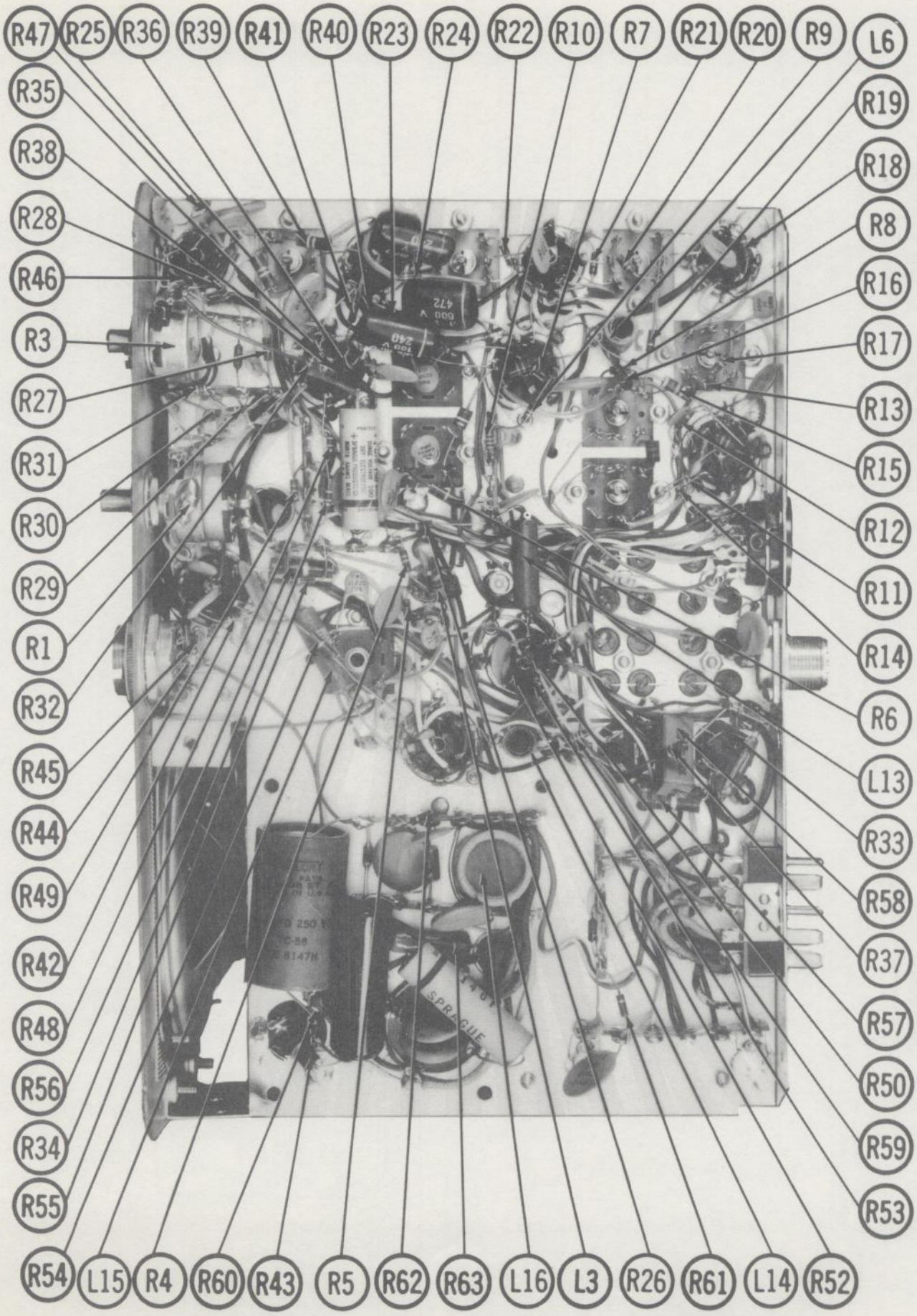

CHASSIS BOTTOM VIEW – RESISTOR & INDUCTOR IDENT.

PHOTOFACT® Folder with CIRCUITRACE®

VOCALINE MODEL COMMAIRE PT-27

TRADE NAME	Vocaline Model Commaire PT-27
MANUFACTURER	Vocaline Company of America, Inc., Old Saybrook, Conn.
TYPE SET	AC-Battery Operated 2 Tube - 18 Transistor Portable Citizens Band Transmitter-Receiver
POWER SUPPLY	110 — 120 Volts AC, 60 Cycles (or) 15 volts DC (Internal or External Supply)
RATING	10MA @ 15 Volts DC (Receive, No Signal) 550MA @ 15 Volts DC (Transmit, No Modulation)
TUNING RANGE	BROADCAST: 530 — 1600KC CITIZENS BAND: Any 4 of Channels 2 thru 23. Receiver may be tuned manually to any channel.

NOTICE

ONLY THOSE PERSONS PROPERLY LICENSED ARE PERMITTED TO MAKE REPAIRS OR ADJUSTMENTS WHICH MAY RESULT IN ILLEGAL OPERATION. (REFER TO FCC RULES & REGULATIONS PART 19, SUBPART D, SECTION 19.71.)

VOCALINE MODEL COMMAIRE PT-27

HOWARD W. SAMS & CO., INC. Indianapolis 6, Indiana

LZ531

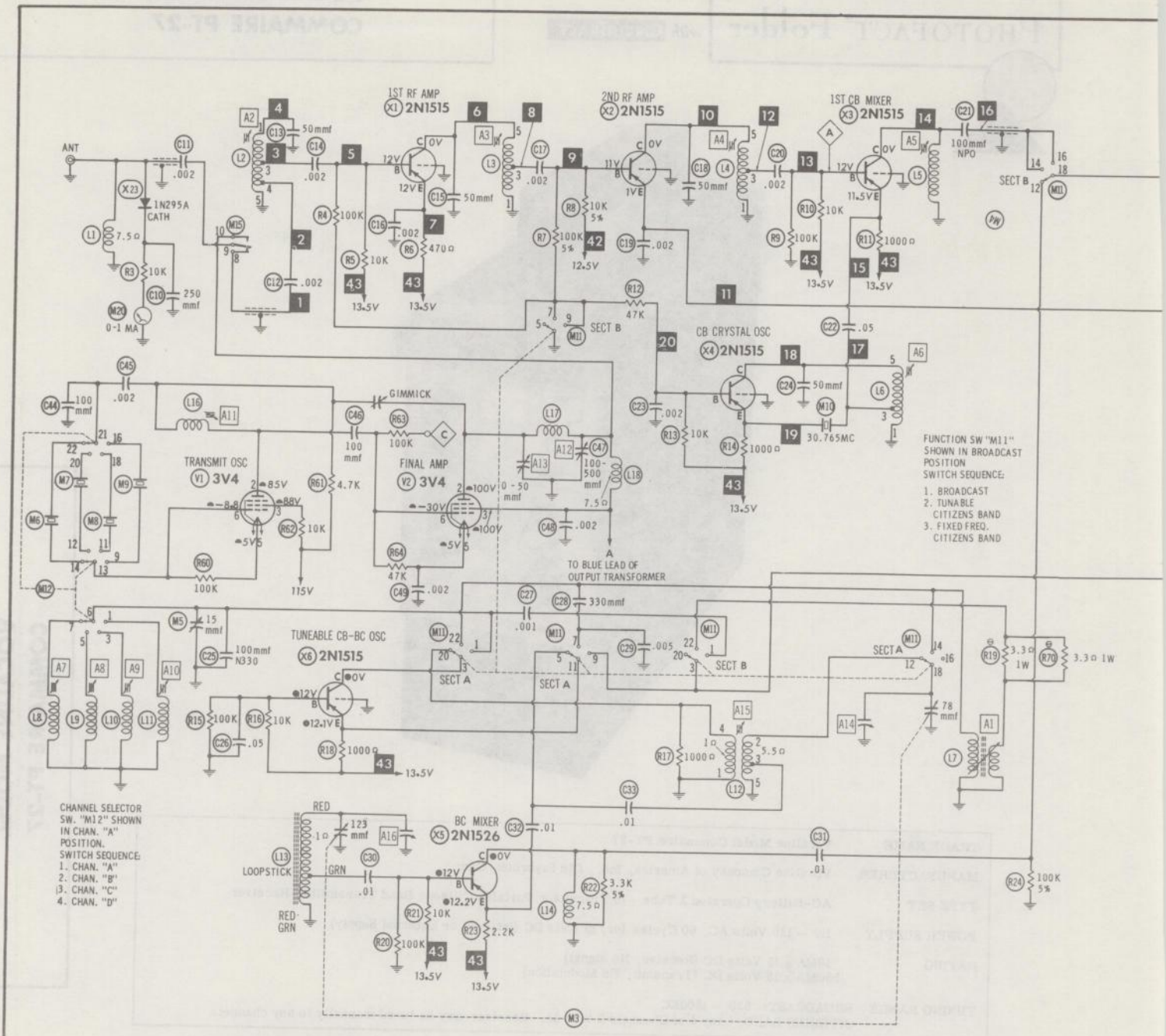

RESISTANCE READINGS

ITEM	TUBE	Pin 1	Pin 2	Pin 3	Pin 4	Pin 5	Pin 6	Pin 7
V1	3V4	14Ω	†4800Ω	†10K	NC	20Ω	100K	25Ω
V2	3V4	0Ω	†950Ω	†950Ω	NC	85Ω	47K	14Ω

ALL MEASUREMENTS TAKEN IN TRANSMIT POSITION.
† MEASURED FROM OUTPUT OF X21 AND X22.

NC NO CONNECTION

ALL VOLTAGES MEASURED
IN CB TUNABLE POSITION
UNLESS OTHERWISE SPECIFIED
NO SIGNAL APPLIED
14 VOLT BATTERY CONDITION

● MEASURED IN AM POSITION
◓ MEASURED IN TRANSMIT
■ MEASURED WITH SQUELCH ON

TERMINAL VIEW
M15-BOTTOM VIEW

RESISTANCE MEASUREMENTS NOT GIVEN FOR X1 THRU X18 BECAUSE OF THE WIDE VARIATION IN INTERNAL TRANSISTOR RESISTANCE.

⊖ SEE PARTS LIST FOR ALTERNATE VALUE OR APPLICATION

1. DC voltage measurements taken with vacuum tube voltmeter.
2. Socket connections or transistor terminals are shown as bottom views.
3. Measured values are from socket pin or terminal to common ground.
4. Nominal tolerance on component values makes possible a variation of ±15% in voltage and resistance readings.
5. Volume control at maximum, no signal applied for voltage measurements.

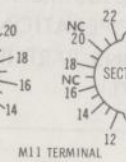

M11 TERMINAL GUIDE

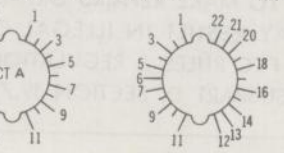

M12 TERMINAL GUIDE

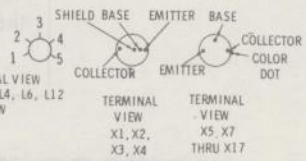

TERMINAL VIEW L2, L3, L4, L6, L12 TOP VIEW

TERMINAL VIEW X1, X2, X3, X4 AND X6

TERMINAL VIEW X5, X7 THRU X17

TERMINAL VIEW X18

A PHOTOFACT STANDARD NOTATION SCHEMATIC with CIRCUITRACE

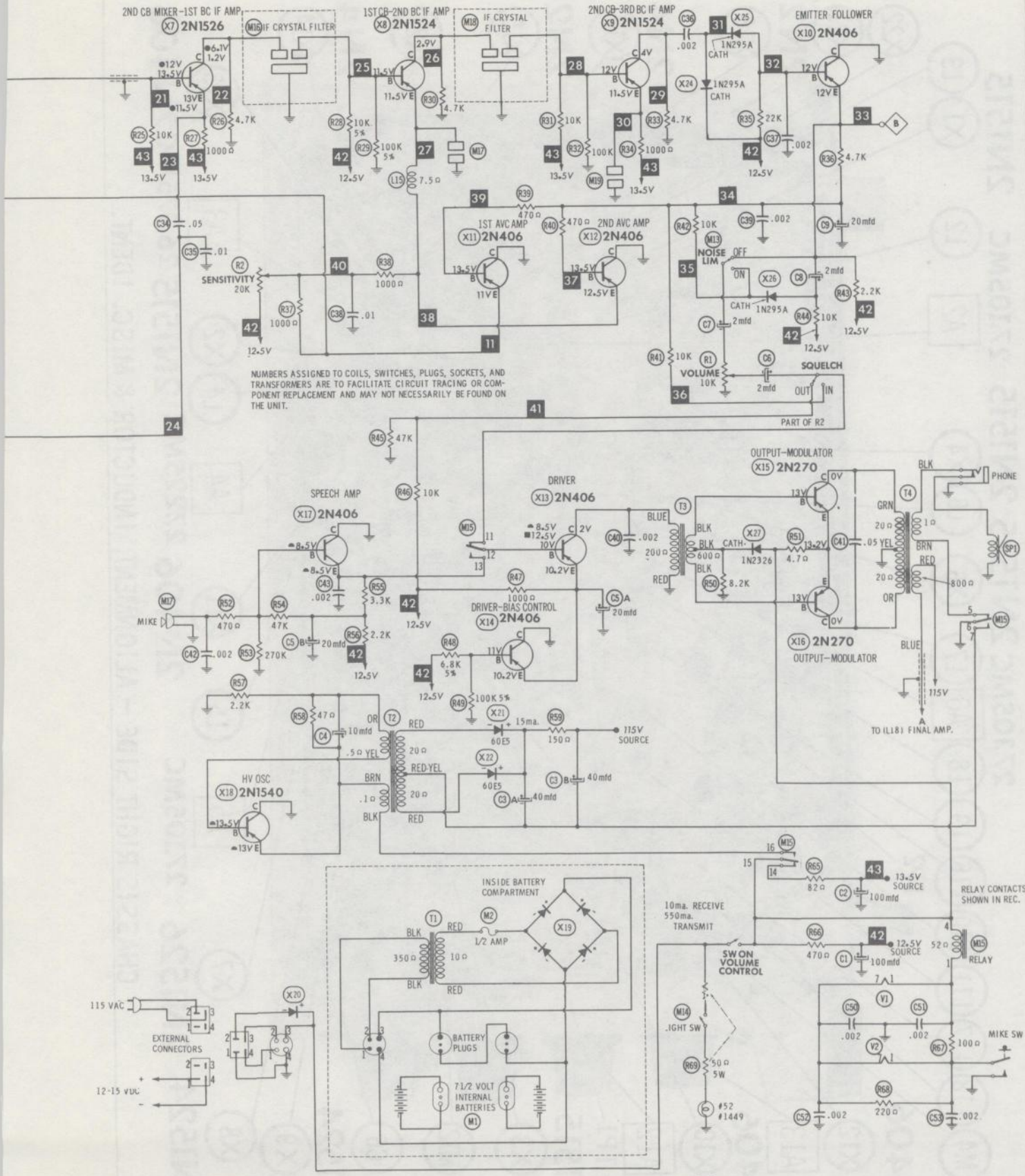

VOCALINE MODEL COMMAIRE PT-27

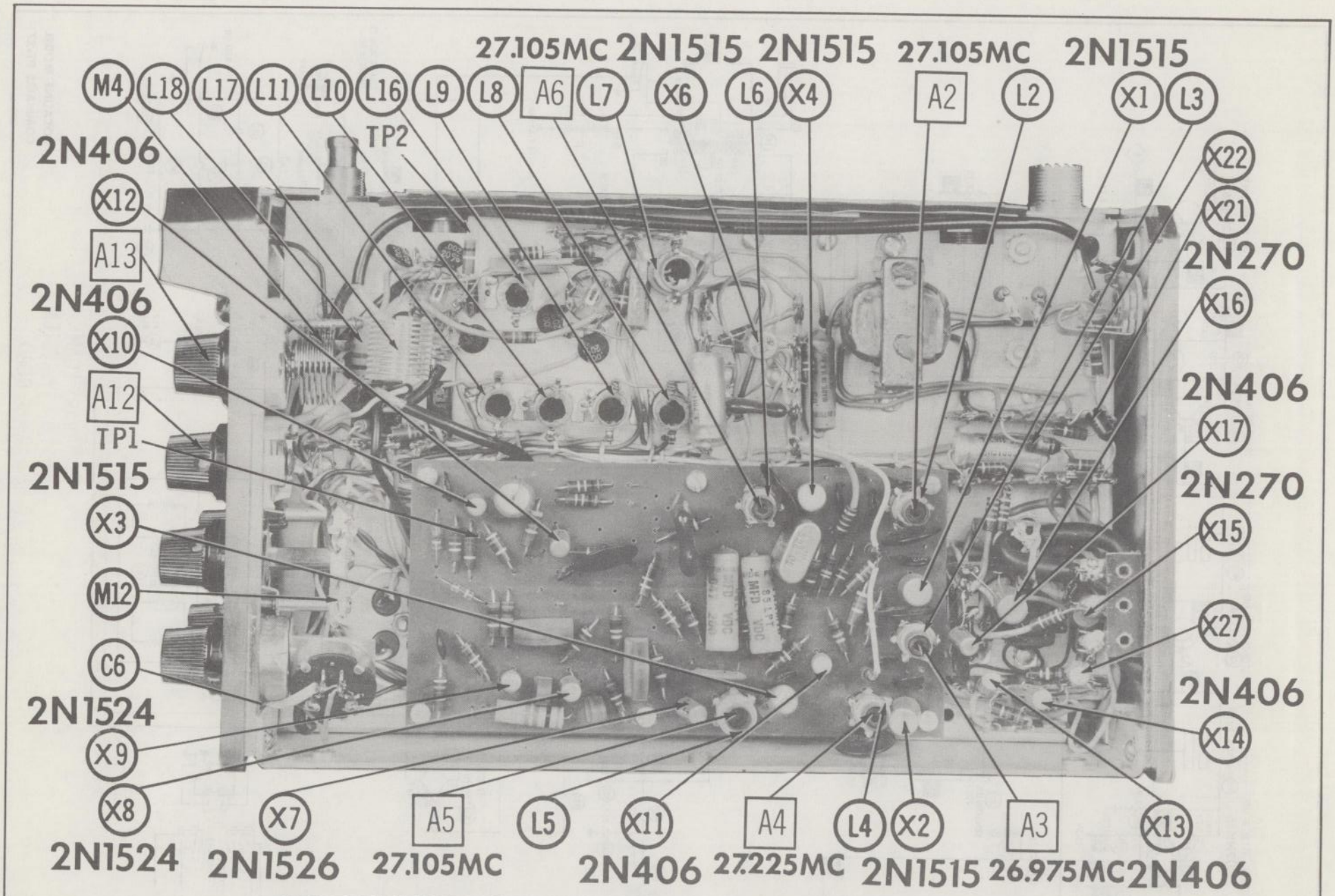

CHASSIS RIGHT SIDE – ALIGNMENT, INDUCTOR & MISC. IDENT.

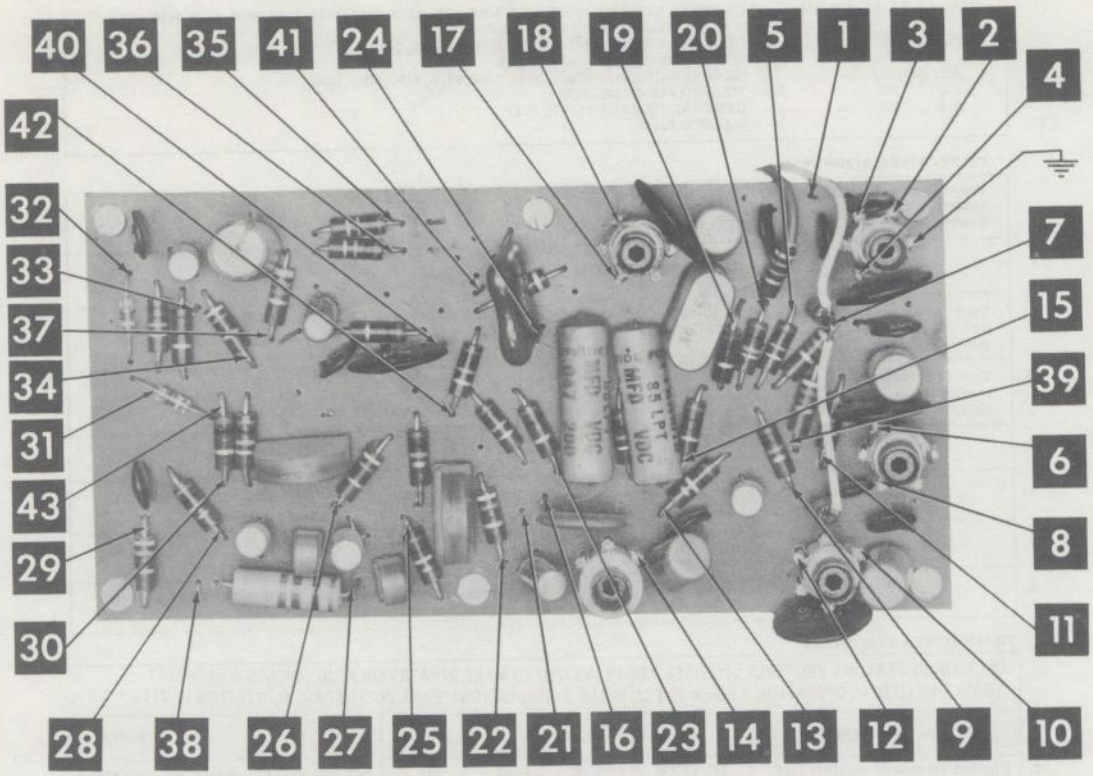

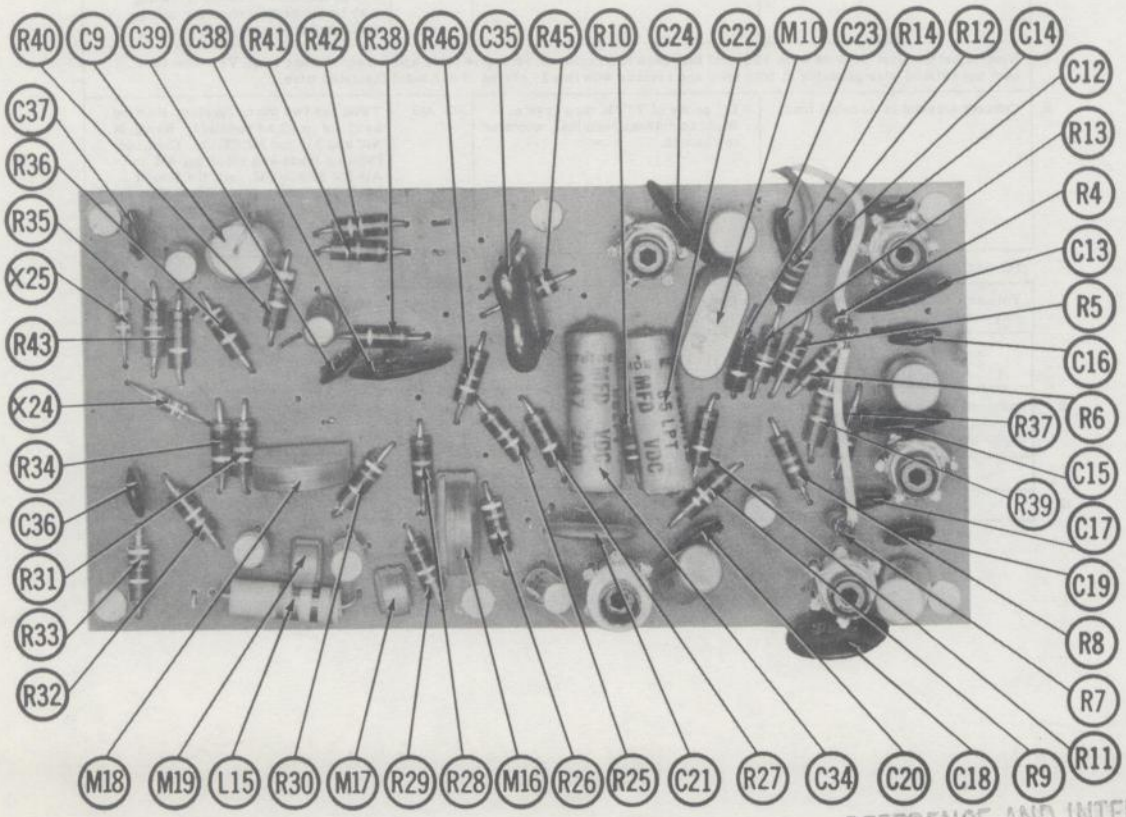

A Howard W. Sams CIRCUITRACE® Photo

PRINTED-BOARD

ALIGNMENT INSTRUCTIONS

ALIGNMENT INSTRUCTIONS—READ CAREFULLY BEFORE ATTEMPTING ALIGNMENT

Suggested Alignment Tools:

A1, A7, A8, A9, A10, A14.....	GENERAL CEMENT #5000, 5003, 5066, 8271, 8272, 8276, 8277, 8290, 8609, 8722, 9150, 9298 WALSCO #2515, 2516, 2518, 2519, 2525, 2541
A2 thru A6.....	GENERAL CEMENT #8282, 8606, 8606-L, 9295, 9440 WALSCO #2526, 2543, 2544, 2545
A11, A13.....	GENERAL CEMENT #5000, 5003, 5066, 8276, 8290, 9087, 9089 WALSCO #2512, 2525, 2528
A12.....	GENERAL CEMENT #5097, 8727 WALSCO #2515

CB RECEIVER ALIGNMENT

Use only enough generator output to provide a usable indication.
Squelch Off.
Connect DC VTVM between point (B) and 12.5V source.

	SIGNAL GENERATOR	CHANNEL	ADJUST	REMARKS
1.	Tune to channel freq. High side thru .05mfd to point (A). Low side to chassis.	12 (27.105MC)	A1	Place selector switch in CB tunable position. Adjust for maximum deflection.
2.	Tune to channel freq. High side to antenna terminal. Low side to chassis.	12 (27.105MC)	A2, A3, A4, A5, A6	"
3.	"	2 (26.975MC)	A3	"
4.	"	12 (27.105MC)	A2, A5	"
5.	"	22 (27.225MC)	A4	"
6.	"	Channel Desired	A7, A8, A9, A10	Set selector switch to fixed CB. Adjust each for maximum deflection on channel A, B, C, D respectively.

TRANSMITTER ALIGNMENT

ONLY THOSE PERSONS PROPERLY LICENSED ARE PERMITTED TO MAKE REPAIRS OR ADJUSTMENTS WHICH MAY RESULT IN ILLEGAL OPERATION. (REFER TO FCC RULES & REGULATIONS PART 19, SUBPART D, SECTION 19.71)

	SPECIAL INSTRUCTIONS	INDICATOR	ADJUST	REMARKS
7.	Connect antenna or suitable load.	DC VTVM between point (C) and ground.	A11	Key transmitter. Adjust A11 clockwise until there is no meter indication. Then slowly adjust A11 CCW until a reading of -25V is obtained. Check reading for all four channels.
8.	"	"	A12, A13	Key transmitter. Adjust A12 for a meter deflection. Then turn A13 for maximum meter indication. Repeat this proceedure. SLIGHT retuning may be necessary when the unit is connected to the antenna.

Neutralization must be done when either of the tubes are replaced. Remove plate and screen voltage from V2. Disconnect the twisted wire gimmick at both ends and replace with two 3" pieces of #22 solid insulated wire.

9.	Connect antenna or suitable load.	DC probe of VTVM thru crystal diode to antenna terminal, common to chassis.	A12, A13	Twist the two wires together starting as close to V2 as possible. Readjust A12 and A13 for MINIMUM. Continue twisting leads and adjusting A12 and A13 for MINIMUM. until the lowest possible reading is obtained. Clip the excess lead lengths and bend the gimmick toward the front panel. Reconnect voltage to V2.

BC RECEIVER ALIGNMENT

Volume control should be at maximum position. Output of signal generator should be no higher than necessary to obtain an output reading.

	SIGNAL GENERATOR COUPLING	SIGNAL GENERATOR FREQUENCY	RADIO DIAL SETTING	INDICATOR	ADJUST	REMARKS
10.	Fashion loop of several turns of wire and radiate signal into loop of receiver.	535KC (Unmod.)	AM Tuning gang fully closed.	VTVM to point (B), common to 12.5V.	A14	Adjust for maximum deflection.
11.	"	600KC	600KC	"	A15	"
12.	"	1200KC	1200KC	"	A16	"

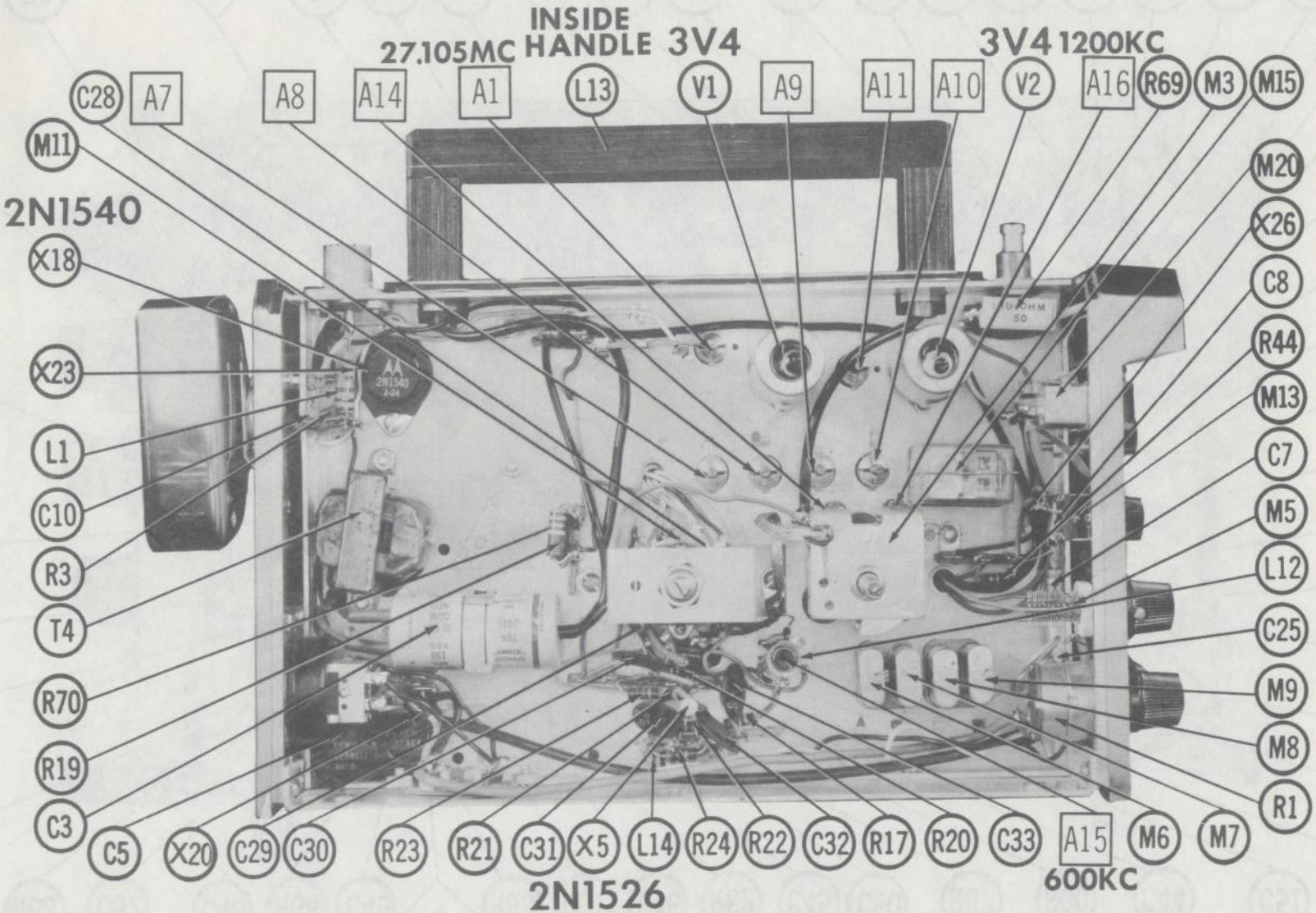

CHASSIS – LEFT SIDE

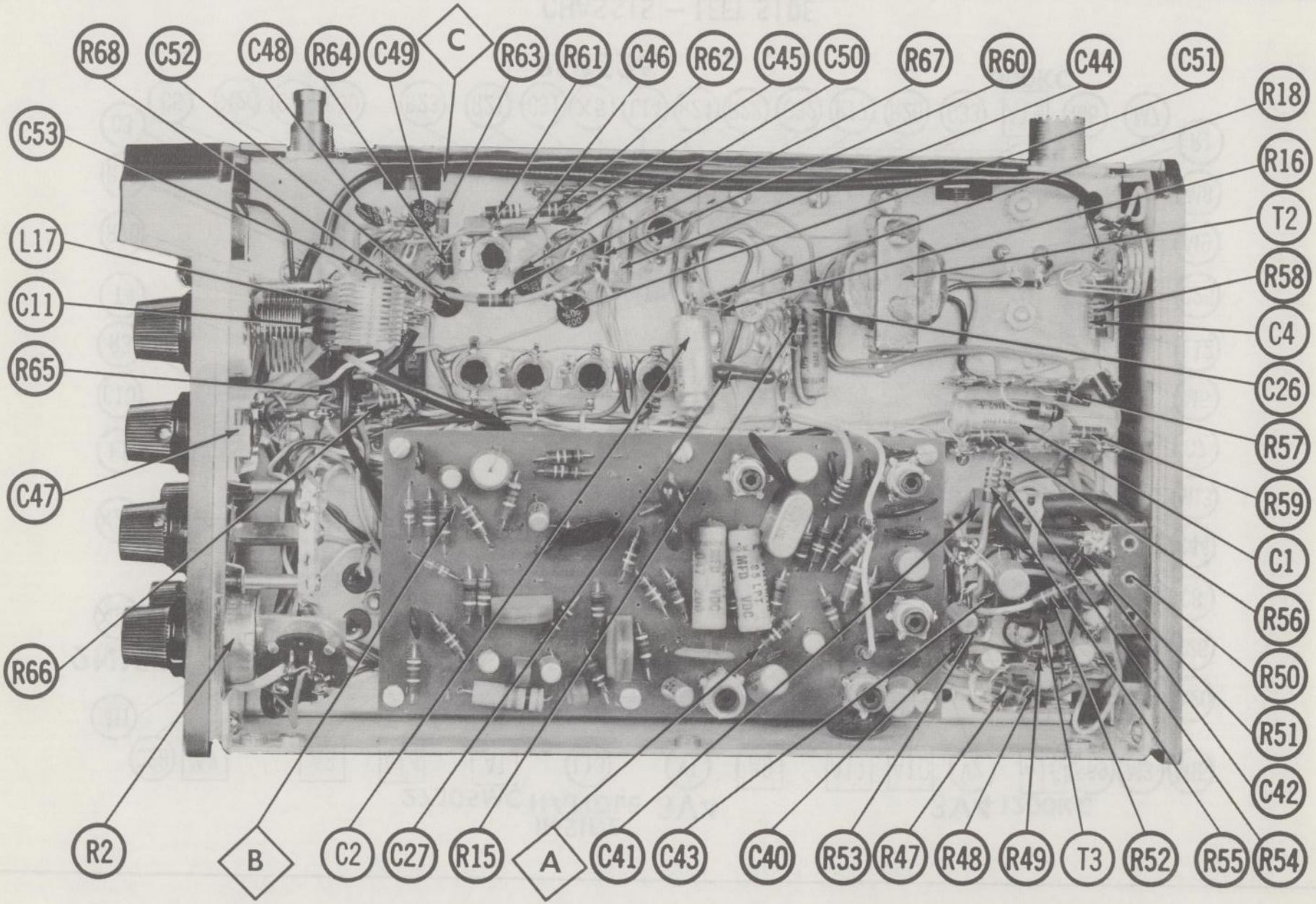

CHASSIS RIGHT SIDE – CAPACITOR, RESISTOR & TRANSFORMER IDENT.

PARTS LIST AND DESCRIPTIONS

WIRING DATA

General-use Hook-up Wire	Use BELDEN No. 8530 (Solid) Available in 12 Colors 8524 (Stranded) Available in 12 Colors
Shielded Antenna Lead	Use BELDEN No. 8214 Lowest Loss (RG-8/U Type) 8237 Low Loss (RG-8/U) 8240 (Solid) Miniature (RG-58/U) 8259 (Stranded) Miniature (RG-58A/U)
Coiled Microphone Cable	Use BELDEN No. 8497 3 Conductor- 1 Shielded for Press-to-Talk (Neoprene) 8496 3 Conductor- 1 Shielded for Press-to-Talk (Vinyl)
Ignition Noise Suppression	Use BELDEN No. 7300-Series Spark-Plug Sets
Bonding Strap	Use BELDEN No. 8661 (3/8 In.)

TUBES

◆ AMPEREX ◆ GENERAL ELECTRIC ◆ RCA ◆ RAYTHEON ◆ SYLVANIA ◆

ITEM No.	USE	TYPE
V1	Transmit Oscillator	3V4
V2	Final Amplifier	3V4

TRANSISTORS

ITEM No.	ORIG. TYPE	USE	REPLACEMENT DATA: GENERAL ELECTRIC PART No.	RCA PART No.	RAYTHEON PART No.	NOTES
X1	2N1515	1st CB RF Amplifier	GE-1			PNP CB-Citizens Band
X2	2N1515	2nd CB RF Amplifier	GE-1			PNP BC-Standard Broadcast
X3	2N1515	1st CB Mixer	GE-1			PNP
X4	2N1515	CB Crystal Oscillator	GE-1			PNP
X5	2N1526	BC Mixer	GE-1		2N484	PNP
X6	2N1515	Tune CB-BC Osc.	GE-1			PNP
X7	2N1526	2nd CB Mixer-1st BC IF Amplifier	GE-1		2N484	PNP
X8	2N1524	1st CB-2nd BC Amplifier	GE-1		2N483	PNP
X9	2N1524	2nd CB-3rd BC Amplifier	GE-1		2N483	PNP
X10	2N406	Emitter Follower	GE-2	2N406	2N362	PNP
X11	2N406	1st AVC Amplifier	GE-2	2N406	2N362	PNP
X12	2N406	2nd AVC Amplifier	GE-2	2N406	2N362	PNP
X13	2N406	Driver	GE-2	2N406	2N362	PNP
X14	2N406	Driver Bias Control	GE-2	2N406	2N362	PNP
X15	2N270	Output-Modulator	GE-2	2N270	2N631	PNP
X16	2N270	Output-Modulator	GE-2	2N270	2N631	PNP
X17	2N406	Speech Amplifier	GE-2	2N406	2N362	PNP
X18	2N1540	HV Oscillator	GE-3	2N301		PNP

POWER RECTIFIERS & SIGNAL DIODES

ITEM No.	CURRENT RATING (Measured)	ORIGINAL Part or Type No.	RECTIFIERS: RCA PART No.	SARKES TARZIAN PART No.	DIODES: RAYTHEON PART No.	NOTES
M19	.140A	485-15	1N3195 *	154B		LV Supply Bridge. * 4 Required
X20		485-16	1N3194	F-2		External Battery Polarity Protection
X21	.0075A	85-5	1N3194	F-4		HV Rectifier
X22	.0075A	85-5	1N3194	F-4		HV Rectifier
X23		85-12			1N295A	Meter Output Rectifier (1N295A)
X24		85-12			1N295A	Audio Detector (1N295A)
X25		85-12			1N295A	Audio Detector (1N295A)
X26		85-12			1N295A	Noise Limiter (1N295A)
X27		85-14				Output Bias (1N2326)

ELECTROLYTIC CAPACITORS

ITEM No.	RATING: CAP.	VOLT.	REPLACEMENT DATA: VOLCALINE PART No.	AEROVOX PART No.	CORNELL-DUBILIER PART No.	GENERAL ELECTRIC PART No.	MALLORY PART No.	PYRAMID PART No.	SPRAGUE PART No.
C1	100	15	77-89	PTT73	NLW100-15	MT1-19	TT15X100	MLV100-15	TE-1162
C2	100	15	77-89	PTT73	NLW100-15	MT1-19	TT15X100	MLV100-15	TE-1162
C3A	40	150	77-100	PRS2195	BBRD4415	QT2-9	TCS48	TDLD-7	TVA-2445
B	40	150							
C4	10	50	77-108	PTT92	NLW10-50	MT1-6	TT50X10	MLV10-50	TE-1304

ELECTROLYTIC CAPACITORS (cont)

ITEM No.	RATING: CAP.	VOLT.	REPLACEMENT DATA: VOCALINE PART No.	AEROVOX PART No.	CORNELL-DUBILIER PART No.	MALLORY PART No.	PYRAMID PART No.	SPRAGUE PART No.	NOTES
C5A	20	.25	77-24	PRS2075	BBRD2202	QT2-5	TCD26	TDLD-3	TVA-2428
B	20	25							
C6	2	15	77-85	PTT62	NLW2-50	MT1-1	TT150X2	MLV2-50	TE-1149
C7	2	15	77-85	PTT62	NLW2-50	MT1-1	TT150X2	MLV2-50	TE-1149
C8	2	15	77-85	PTT62	NLW2-50	MT1-1	TT150X2	MLV2-50	TE-1149
C9	20	25	77-109	PTT81	NLW20-50	MT1-11	TT25X20	MLV25-25	TE-1206

FIXED CAPACITORS

ITEM No.	RATING	REMARKS	REPLACEMENT DATA: AEROVOX PART No.	CENTRALAB PART No.	CORNELL-DUBILIER PART No.	ELMENCO PART No.	MALLORY PART No.	SPRAGUE PART No.
C10	250		DI-250	DD-251	L10T25	CCD-251	GP325	10TS-T25
C11	.002		BPD-002	DD-202	BYA10D2	CCD-202	B-220	5HK-D20
C12	.002		BPD-002	DD-202	BYA10D2	CCD-202	B-220	5HK-D20
C13	50 5%		DI-50	DD-500	L10Q5	CCD-500	GP450	10TS-Q50
C14	.002		BPD-002	DD-202	BYA10D2	CCD-202	B-220	5HK-D20
C15	50 5%		DI-50	DD-500	L10Q5	CCD-500	GP450	10TS-Q50
C16	.002		BPD-002	DD-202	BYA10D2	CCD-202	B-220	5HK-D20
C17	.002		BPD-002	DD-202	BYA10D2	CCD-202	B-220	5HK-D20
C18	50 5%		DI-50	DD-500	L10Q5	CCD-500	GP450	10TS-Q50
C19	.002		BPD-002	DD-202	BYA10D2	CCD-202	B-220	5HK-D20
C20	.002		BPD-002	DD-202	BYA10D2	CCD-202	B-220	5HK-D20
C21	100 NPO		NPO-DI 100	DTZ-100	C10T1C	CCTO-101	CNO-310	10TCC-T10
C22	.047 200V		P288N-047	DD-503	CUB2S47	4DP-3-473	GEM-4147	2TM-S47
C23	.002		BPD-002	DD-202	BYA10D2	CCD-202	B-220	5HK-D20
C24	50 5%		DI-50	DD-500	L10Q5	CCD-500	GP450	10TS-Q50
C25	100 N330			TCA-100		*		
C26	.05 200V		P288N-05	DD-503	CUB2S5	4DP-3-503	GEM-415	2TM-S50
C27	.001 5%		1469-1000		5R5D1	CM-20B-102J	MCJ255	MS-21
C28	330 5%		1469-330		22R5T33	CM-20B-331J		MS-333
C29	.005		BPD-005	DD-502	BYA10D5	CCD-502	B-250	5HK-D50
C30	.01		BPD-01	DD-103	BYA10S1	CCD-103	B-110	5HK-S10
C31	.01		BPD-01	DD-103	BYA10S1	CCD-103	B-110	5HK-S10
C32	.01		BPD-01	DD-103	BYA10S1	CCD-103	B-110	5HK-S10
C33	.01		BPD-01	DD-103	BYA10S1	CCD-103	B-110	5HK-S10
C34	.047 200V		P288N-047	DD-502	CUB2S47	4DP-3-473	GEM-4147	2TM-S47
C35	.01 5%		1469-10000		1DR5S1	CM-35B-103J	MCE475	MS-11
C36	.002		BPD-002	DD-202	BYA10D2	CCD-202	B-220	5HK-D20
C37	.002		BPD-002	DD-202	BYA10D2	CCD-202	B-220	5HK-D20
C38	.01		BPD-01	DD-103	BYA10S1	CCD-103	B-110	5HK-S10
C39	.002		BPD-002	DD-202	BYA10D2	CCD-202	B-220	5HK-D20
C40	.002		BPD-002	DD-202	BYA10D2	CCD-202	B-220	5HK-D20
C41	.047 200V		P288N-047	DD-503	CUB2S47	4DP-3-473	GEM-4147	2TM-S47
C42	.002		BPD-002	DD-202	BYA10D2	CCD-202	B-220	5HK-D20
C43	.002		BPD-002	DD-202	BYA10D2	CCD-202	B-220	5HK-D20
C44	100 5%		1469-100		22R5T1	CM-20B-101J	MCE235	MS-31
C45	.002		BPD-002	DD-202	BYA10D2	CCD-202	B-220	5HK-D20
C46	100 5%		1469-100		22R5T1	CM-20B-101J	MCE235	MS-31
C47	100-500	#77-102				467		
C48	.002		BPD-002	DD-202	BYA10D2	CCD-202	B-220	5HK-D20
C49	.002		BPD-002	DD-202	BYA10D2	CCD-202	B-220	5HK-D20
C50	.002		BPD-002	DD-202	BYA10D2	CCD-202	B-220	5HK-D20
C51	.002		BPD-002	DD-202	BYA10D2	CCD-202	B-220	5HK-D20
C52	.002		BPD-002	DD-202	BYA10D2	CCD-202	B-220	5HK-D20
C53	.002		BPD-002	DD-202	BYA10D2	CCD-202	B-220	5HK-D20

* Not normally in distributor's stock. Available thru distributor on order to manufacturer.
\# Vocaline Part Number.

CONTROLS

All wattages 1/2 watt, or less, unless otherwise listed.

ITEM No.	USE	RESIST-ANCE	REPLACEMENT DATA: VOCALINE PART No.	CENTRALAB PART No.	CLAROSTAT PART No.	CTS-IRC PART No.	MALLORY PART No.
R1	Volume, Power	10K	79-124	B13-116, SK7			
R2	Sensitivity, Squelch Switch	20K	79-123				

PARTS LIST AND DESCRIPTIONS (Continued)

RESISTORS

All wattages 1/2 watt, or less, unless otherwise listed.

ITEM No.	RATING	REPLACEMENT DATA		
		IRC PART No.	WORKMAN PART No.	REMARKS
R3	10K			
R4	100K			
R5	10K			
R6	470Ω			
R7	100K 5%			
R8	10K 5%			
R9	100K 5%			
R10	10K			
R11	1000Ω			
R12	47K			
R13	10K			
R14	1000Ω			
R15	100K			
R16	10K			
R17	1000Ω			
R18	1000Ω			
R19	3.3Ω 1W			Note 1
R20	100K 5%			
R21	10K 5%			
R22	3300Ω 5%			
R23	2200Ω			
R24	100K 5%			
R25	10K 5%			
R26	4700Ω			
R27	1000Ω			
R28	10K 5%			
R29	100K 5%			
R30	4700Ω			
R31	10K			
R32	100K 5%			
R33	4700Ω			
R34	1000Ω			
R35	22K			
R36	4700Ω			
R37	1000Ω			
R38	1000Ω			
R39	470Ω			
R40	470Ω			
R41	10K			
R42	10K			
R43	2200Ω			
R44	10K 5%			
R45	47K			
R46	10K			
R47	1000Ω			
R48	6800Ω 5%			
R49	100K 5%			
R50	8200Ω			
R51	4.7Ω			
R52	470Ω			
R53	270K			
R54	47K			
R55	3300Ω			
R56	2200Ω			
R57	2200Ω			
R58	47Ω			
R59	150Ω			
R60	100K			
R61	4700Ω			
R62	10K			
R63	100K			
R64	47K			
R65	82Ω			
R66	470Ω			
R67	100Ω			
R68	220Ω			
R69	50Ω 5W	PW5-50	SQ-5W-50	(51Ω) † Note 1
R70	3.3Ω 1W			

Note 1. When R19 is 1.5Ω, R70 is not used.
† Value used in early versions.

COILS (RF-IF)

ITEM No.	USE	REPLACEMENT DATA					NOTES
		VOCALINE PART No.	Merit PART No.	Miller PART No.	Stancor PART No.	Workman PART No.	
L1	RF Choke (1MH)	86-13					
L2	Rec. Ant.	86-81					
L3	1st RF	86-82					
L4	2nd RF	86-82					
L5	Mixer Plate	86-84					
L6	1st CB Osc.	86-85					
L7	2nd CB Osc.	486-88					
L8	Channel A Osc.	86-68					
L9	Channel B Osc.	86-68					
L10	Channel C Osc.	86-68					
L11	Channel D Osc.	86-68					
L12	BC Osc.	86-86					
L13	Loopstick	86-87					
L14	RF Choke (1MH)	86-13					
L15	RF Choke (1MH)	86-13					
L16	Transmit Osc.	86-68					
L17	Final Plate	86-18					
L18	RF Choke (1MH)	86-13					

TRANSFORMER (POWER)

ITEM No.	RATING			REPLACEMENT DATA					NOTES
	PRI.	SEC. 1	SEC. 2	VOCALINE PART No.	MERIT PART No.	STANCOR PART No.	THORDARSON PART No.	TRIAD PART No.	
T1	117V @ .040A	13VAC @ .175A		99-55					

TRANSFORMER (POWER)

ITEM No.	RATING			REPLACEMENT DATA					NOTES
	PRI.	SEC. 1	SEC. 2	VOCALINE PART No.	MERIT PART No.	STANCOR PART No.	THORDARSON PART No.	TRIAD PART No.	
T2	14VDC @ .458A	1VAC @ .018A	160VAC @ .15MA	99-52					

TRANSFORMER (DRIVER)

ITEM No.	TURNS RATIO		REPLACEMENT DATA					NOTES
	PRI.	SEC.	VOCALINE PART No.	MERIT PART No.	STANCOR PART No.	THORDARSON PART No.	TRIAD PART No.	
T3	1	1	99-53					

TRANSFORMER (AUDIO OUTPUT)

ITEM No.	IMPEDANCE		REPLACEMENT DATA					NOTES
	PRI.	SEC.	VOCALINE PART No.	Merit PART No.	Stancor PART No.	Thordarson PART No.	Triad PART No.	
T4	2700Ω	3-4Ω	99-54					

SPEAKER

ITEM No.	TYPE			REPLACEMENT DATA		NOTES
	SIZE	FIELD	V. C. IMP.	VOCALINE PART No.	QUAM PART No.	
SP1	4"	PM	3-4Ω	98-3	4A07	

BATTERIES

ITEM No.	VOLTAGE	VOCALINE PART No.	REPLACEMENT DATA						NOTES
			BURGESS		EVEREADY		MALLORY		
			"A"	"B"	"A"	"B"	"A"	"B"	
M1	7½V	4125-3				560			2 Required

FUSES

ITEM No.	TYPE	RATING	REPLACEMENT DATA					
			VOCALINE PART No.		LITTELFUSE PART No.		BUSS PART No.	
			FUSE	HOLDER	FUSE	HOLDER	FUSE	HOLDER
M2	3AG Slo Blo Pigtail	½ Amp 125V	4118-28		315.500		MDV ½	

MISCELLANEOUS

ITEM No.	PART NAME	VOCALINE PART No.	NOTES
M3	Tuning Cap.	77-107	2 Gang (Ant. 123mmf Max. Osc. 78mmf Max.)
M4	Tuning Cap.	77-101	1 Section. Transmit Final (0-50mmf)
M5	Tuning Cap.	77-105	1 Section. CB, Fine Tuning (2.3-14.2mmf)
M6	Crystal	112-8-FR	Transmit Oscillator } Specify Frequency Desired
M7	Crystal	112-8-FR	Transmit Oscillator } Specify Frequency Desired
M8	Crystal	112-8-FR	Transmit Oscillator } Specify Frequency Desired
M9	Crystal	112-8-FR	Transmit Oscillator } Specify Frequency Desired
M10	Crystal	112-7	First CB Oscillator 30.765MC
M11	Switch	64-78	Function (Rotary Wafer Type)
M12	Switch	64-79	Channel Selector, (Rotary Wafer Type)
M13	Switch	64-76	Noise Limiter, (DPST Slide Type)
M14	Switch	64-77	Lamp. (Spring Loaded Normally Off, Push-Button Type)
M15	Relay	93-30	Transmit-Receive
M16	455KC IF	127-1	
M17	455KC IF Bypass	127-2	
M18	455KC IF Bypass	127-1	
M19	455KC IF Bypass	127-2	
	Microphone	102-7	
M20	Meter	126-1	RF Output
	Printed Board	105-11	

PHOTOFACT® Folder with CIRCUITRACE®

WEBCOR MODEL ET-350

NOTICE

ONLY THOSE PERSONS PROPERLY LICENSED ARE PERMITTED TO MAKE REPAIRS OR ADJUSTMENTS WHICH MAY RESULT IN ILLEGAL OPERATION. (REFER TO FCC RULES & REGULATIONS PART 19, SUBPART D, SECTION 19.71)

TRADE NAME	Webcor Model ET-350
MANUFACTURER	Webcor Inc., 912 W. North Ave., Chicago 22, Illinois
TYPE SET	Battery Operated Transistorized Portable Single Channel Citizens Band Transmitter-Receiver
POWER SUPPLY	9 Volts DC — RATING: 15 MA @ 9 Volts DC (Receive); 20 MA @ 9 Volts DC (Transmit)
TUNING RANGE	Any one of Citizens Band Channels 1 thru 23.

ALIGNMENT INSTRUCTIONS

ALIGNMENT INSTRUCTIONS—READ CAREFULLY BEFORE ATTEMPTING ALIGNMENT

Best results will be obtained when adjusting A5, A7 and A8 if the antenna normally used is connected to the unit and the unit is as nearly in the cabinet as possible.

Suggested Alignment Tools: GENERAL CEMENT #5000, 5003, 5066, 8276, 8290, 9087, 9089
WALSCO #2512, 2525, 2528

RECEIVER ALIGNMENT

Connect DC probe of VTVM to Point Ⓐ, common to chassis.
Use only enough generator output to provide a usable indication.

	SIGNAL GENERATOR	CHANNEL	ADJUST	REMARKS
1.	High side to base of X1 (Mixer), Low side to chassis. Tune to 455KC (unmod.)		A1, A2, A3	Remove receiver crystal to disable oscillator. Adjust for maximum deflection. Reinsert crystal.
2.	High side to antenna receptacle, low side to chassis. Tune to channel frequency.	Channel Freq. Used	A4	Turn A4 clockwise until oscillator stops, then turn counterclockwise for maximum deflection. Continue turning counterclockwise 1/2 turn.
3.	Connect 3-foot length of wire to generator. Radiate signal into extended antenna.	"	A5	Adjust for maximum output.

TRANSMITTER ALIGNMENT

Output Frequency should be checked by an accurately calibrated secondary frequency standard to be sure frequency is within .005%.

ONLY THOSE PERSONS PROPERLY LICENSED ARE PERMITTED TO MAKE REPAIRS OR ADJUSTMENTS WHICH MAY RESULT IN ILLEGAL OPERATION. (REFER TO FCC RULES & REGULATIONS PART 19, SUBPART D, SECTION 19.71)

	SPECIAL INSTRUCTIONS	INDICATOR	ADJUST	REMARKS
4.	Connect dummy load or antenna to antenna receptacle.	DC probe to point Ⓑ.	A6	Adjust for maximum deflection while rocking A6. Note rate of drop-off on each side of peak and set just below peak on side of gradual drop-off.
5.	"	RF Wattmeter or field strength meter.	A7, A8	Adjust for maximum output. Repeat adjustments until no further improvement is noted.

WEBCOR MODEL ET-350

HOWARD W. SAMS & CO., INC. Indianapolis 6, Indiana

LY213

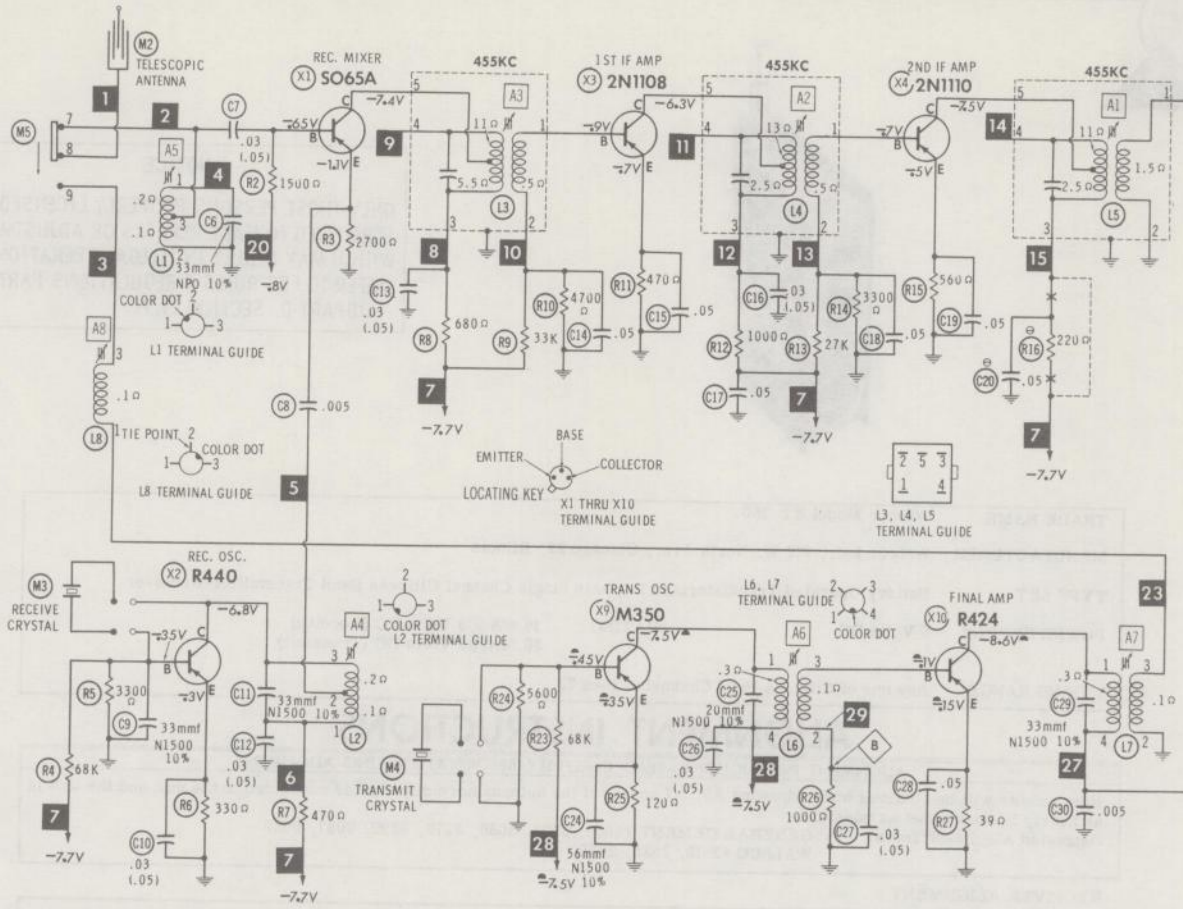

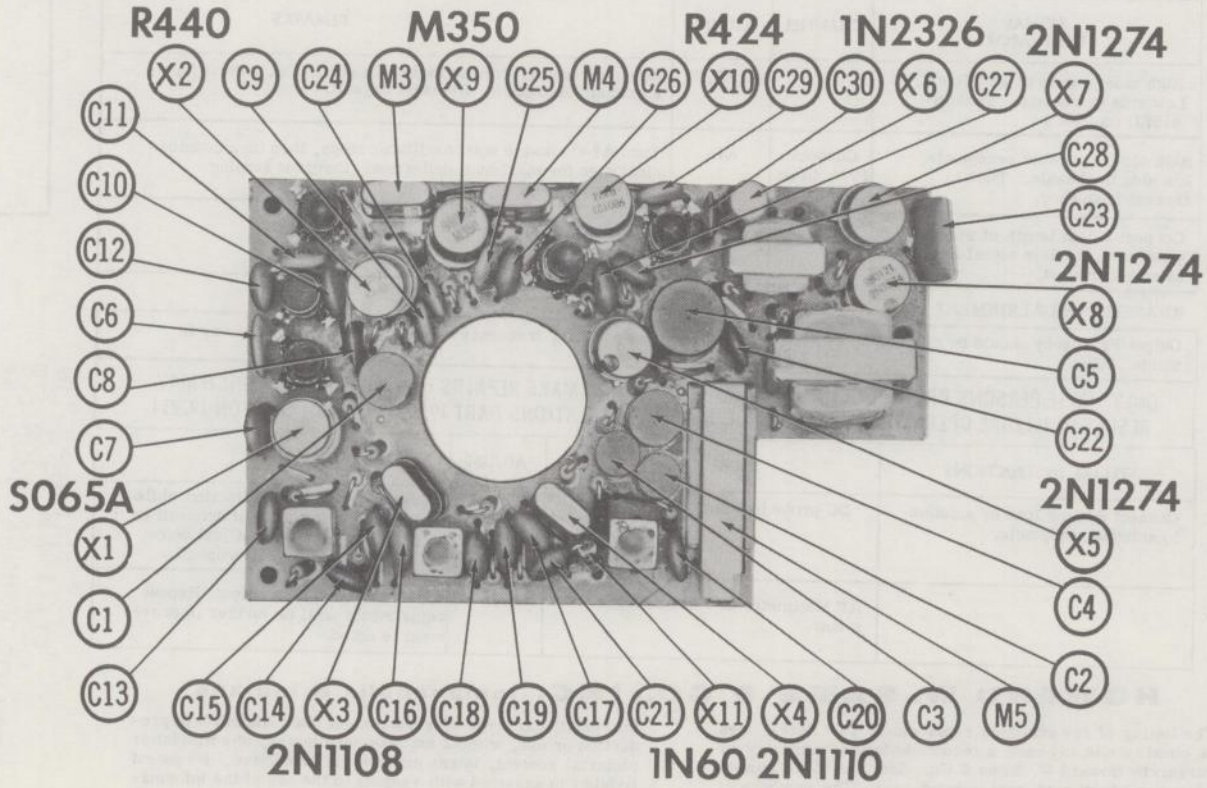

PRINTED BOARD — CAPACITOR, TRANSISTOR & MISC. IDENT.

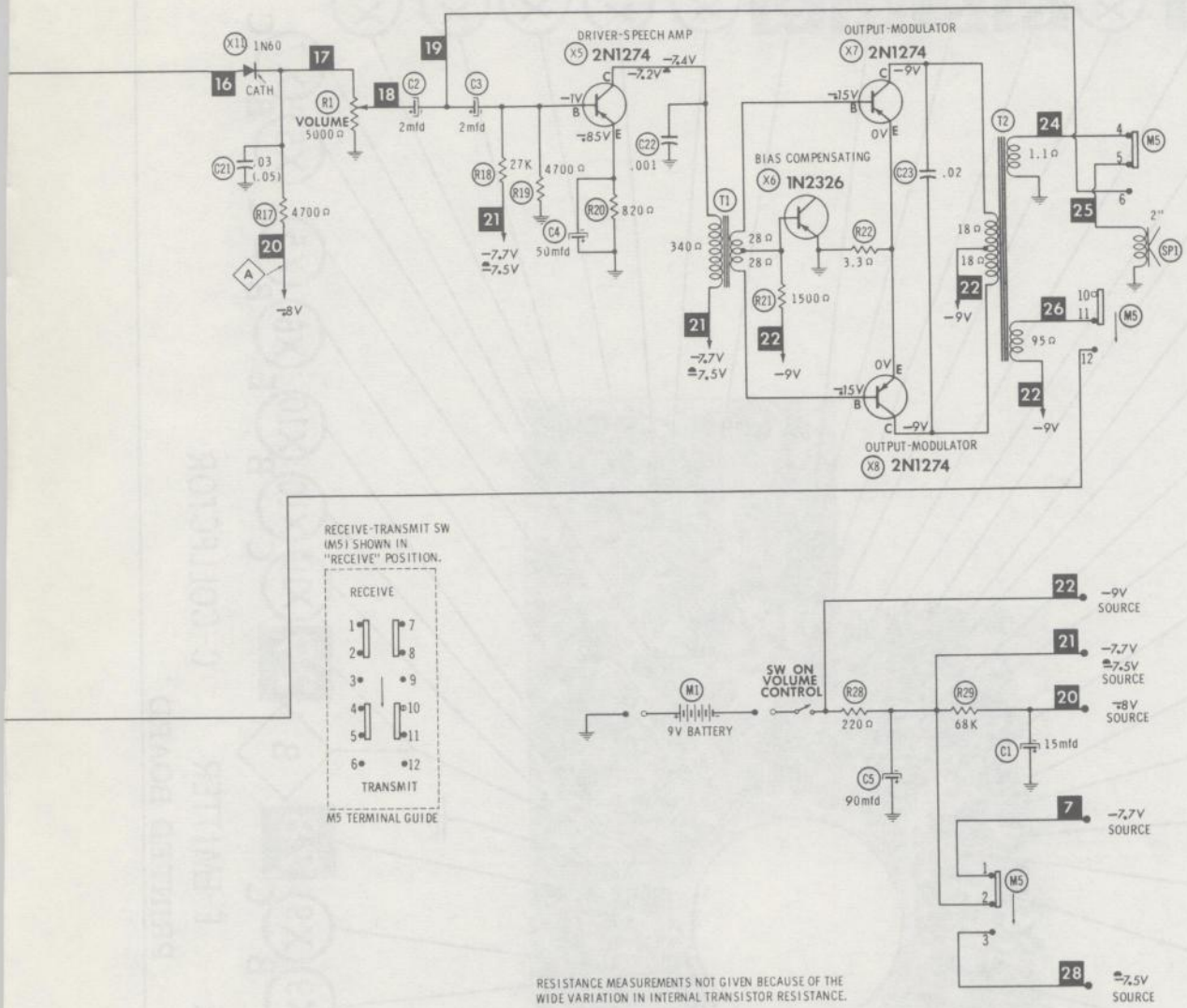

RESISTANCE MEASUREMENTS NOT GIVEN BECAUSE OF THE WIDE VARIATION IN INTERNAL TRANSISTOR RESISTANCE.

NUMBERS ASSIGNED TO COILS, SWITCHES, PLUGS, SOCKETS, AND TRANSFORMERS ARE TO FACILITATE CIRCUIT TRACING OR COMPONENT REPLACEMENT AND MAY NOT NECESSARILY BE FOUND ON THE UNIT.

ALL MEASUREMENTS MADE IN "RECEIVE" POSITION UNLESS OTHERWISE DESIGNATED.
☁ MEASURED IN "TRANSMIT" POSITION.

⊖ SEE PARTS LIST FOR ALTERNATE VALUE OR APPLICATION

1. DC voltage measurements taken with vacuum tube voltmeter.
2. Socket connections or transistor terminals are shown as bottom views.
3. Measured values are from socket pin or terminal to common ground.
4. Nominal tolerance on component values makes possible a variation of ±15% in voltage and resistance readings.
5. Volume control at maximum, no signal applied for voltage measurements.

A PHOTOFACT STANDARD NOTATION SCHEMATIC with CIRCUITRACE™

WEBCOR MODEL ET-350

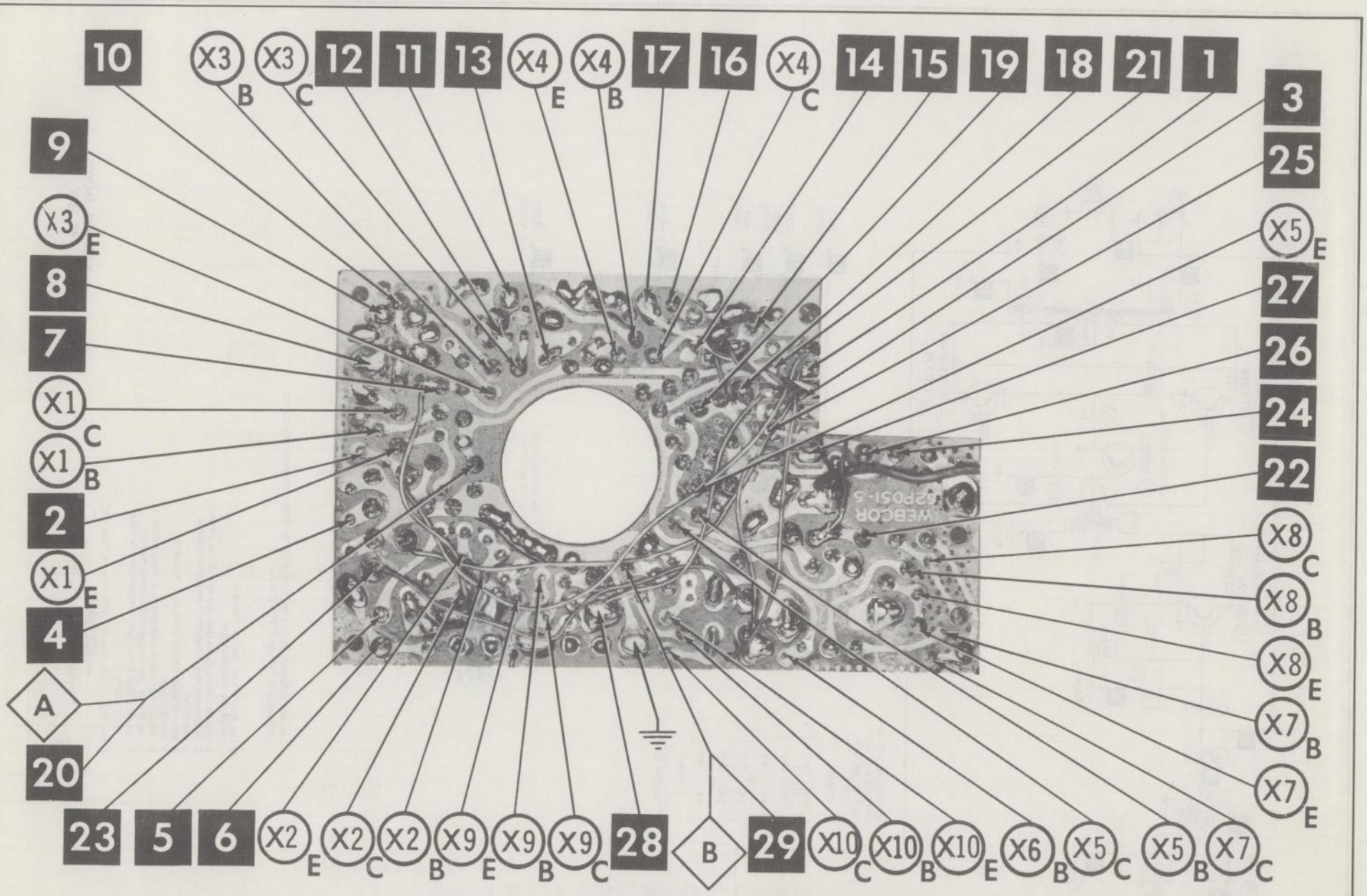

B-BASE E-EMITTER C-COLLECTOR

A Howard W. Sams CIRCUITRACE Photo

PRINTED BOARD

PARTS LIST AND DESCRIPTIONS

WIRING DATA

General-use Unshielded Hook-up Wire	Use BELDEN No. 8530 (Solid 22AWG) 8524 (Stranded 22AWG) 8570 (Stranded 26AWG)	Available in 12 Colors

TRANSISTORS

ITEM No.	ORIG. TYPE	USE	REPLACEMENT DATA		NOTES
			RCA PART No.	RAYTHEON PART No.	
X1	SO65A	Rec. Mixer	2N1179		PNP
X2	R440	Rec. Osc.	2N1178		PNP
X3	2N1108	1st IF Amplifier	2N1425		PNP
X4	2N1110	2nd IF Amplifier	2N1425		PNP
X5	2N1274	Driver-Speech Amp.	2N406	2N362	PNP
X6	1N2326	Bias Compensating	1N2326		PNP
X7	2N1274	Output-Modulator	2N408	2N360	PNP
X8	2N1274	Output-Modulator	2N408	2N360	PNP
X9	M350	Trans. Osc.	2N1178		PNP
X10	R424	Final Amp.	2N1177		PNP

POWER RECTIFIERS & SIGNAL DIODES

ITEM No.	CURRENT RATING (Measured)	ORIGINAL Part or Type No.	RECTIFIERS		DIODES	NOTES
			RCA PART No.	SARKES TARZIAN PART No.	RAYTHEON PART No.	
X11		1N60			1N60	Detector

ELECTROLYTIC CAPACITORS

ITEM No.	RATING		REPLACEMENT DATA						
	CAP.	VOLT.	WEBCOR PART No.	AEROVOX PART No.	CORNELL-DUBILIER PART No.	GENERAL ELECTRIC PART No.	MALLORY PART No.	PYRAMID PART No.	SPRAGUE PART No.
C1	15	10	30P437	BCD12015	ECPB409	MT1-10	TT10X15	MLV15-10	TE-1116
C2	2	10	30P434	BCD12002	ECPB402	MT1-1	PET1930	MLV2-12	TE-1121
C3	2	10	30P434	BCD12002	ECPB402	MT1-1	PET1930	MLV2-12	TE-1121
C4	50	3	30P435	BCD3050	ECPB15		TT6X50	MLV50-3	TE-1058
C5	90	10	30P446						

CONTROLS

All wattages 1/2 watt, or less, unless otherwise listed.

ITEM No.	USE	RESIST-ANCE	REPLACEMENT DATA				
			WEBCOR PART No.	CENTRALAB PART No.	CLAROSTAT PART No.	CTS-IRC PART No.	MALLORY PART No.
R1	Volume & Switch	5000Ω	31P201				

FIXED CAPACITORS

ITEM No.	RATING	REMARKS	REPLACEMENT DATA					
			AEROVOX PART No.	CENTRALAB PART No.	CORNELL-DUBILIER PART No.	ELMENCO PART No.	MALLORY PART No.	SPRAGUE PART No.
C6	33 NPO 10%		NPO-D1 33	DTZ-33	C10Q33C	CCTO-330	CNO-433	10TCC-Q33
C7	.03 10V	(.05) †	C80V503AM	UK10-503	H-05S5		TA-150	TG-S50
C8	.005 50V		C80V502AM	DM-502	H-05D5	CCD-502	TA-250	TG-D50
C9	33 N1500 10%	#30P439				*		
C10	.03 10V	(.05) †	C80V503AM	UK10-503	H-05S5		TA-150	TG-S50
C11	33 N1500 10%	#30P439				*		
C12	.03 10V	(.05) †	C80V503AM	UK10-503	H-05S5		TA-150	TG-S50
C13	.03 10V	(.05)†	C80V503AM	UK10-503	H-05S5		TA-150	TG-S50
C14	.05 10V		C80V503AM	UK10-503	H-05S5		TA-150	TG-S50
C15	.05 10V		C80V503AM	UK10-503	H-05S5		TA-150	TG-S50
C16	.03 10V	(.05) †	C80V503AM	UK10-503	H-05S5		TA-150	TG-S50
C17	.05 10V		C80V503AM	UK10-503	H-05S5		TA-150	TG-S50
C18	.05 10V		C80V503AM	UK10-503	H-05S5		TA-150	TG-S50
C19	.05 10V		C80V503AM	UK10-503	H-05S5		TA-150	TG-S50
C20	.05 10V	Note 1	C80V503AM	UK10-503	H-05S5		TA-150	TG-S50
C21	.03 10V	(.05) †	C80V503AM	UK10-503	H-05S5		TA-150	TG-S50
C22	.001 500V		BPD-001	DD-102	BYA10D1	CCD-102	B-210	5HK-D10
C23	.02 30V		C80V203AM	DA-203	H-05S2		TA-120	TG-S20
C24	56 N1500 10%	#30P441				*		
C25	20 N1500 10%	#30P438				*		
C26	.03 10V	(.05) †	C80V503AM	UK10-503	H-05S5		TA-150	TG-S50
C27	.03 10V	(.05) †	C80V503AM	UK10-503	H-05S5		TA-150	TG-S50
C28	.05 10V		C80V503AM	UK10-503	H-05S5		TA-150	TG-S50
C29	33 N1500 10%	#30P439				*		
C30	.005 50V		C80V502AM	DM-502	H-05D5	CCD-502	TA-250	TG-D50

* Not normally in distributor's stock. Available thru distributor on order to manufacturer.
\# Webcor Part Number.
Note 1. Not used in some versions. Other versions use .01mfd.
† Alternate Value.

RESISTORS

All wattages 1/2 watt, or less, unless otherwise listed.

ITEM No.	RATING	REPLACEMENT DATA		
		IRC PART No.	WORKMAN PART No.	REMARKS
R2	1500Ω			
R3	2700Ω			
R4	68K			
R5	3300Ω			
R6	330Ω			
R7	470Ω			
R8	680Ω			
R9	33K			
R10	4700Ω			
R11	470Ω			
R12	1000Ω			
R13	27K			
R14	3300Ω			
R15	560Ω			

Note 1. Not used in some versions.

ITEM No.	RATING	REPLACEMENT DATA		
		IRC PART No.	WORKMAN PART No.	REMARKS
R16	220Ω			Note 1
R17	4700Ω			
R18	27K			
R19	4700Ω			
R20	820Ω			
R21	1500Ω			
R22	3.3Ω			
R23	68K			
R24	5600Ω			
R25	120Ω			
R26	1000Ω			
R27	39Ω			
R28	220Ω			
R29	68K			

PARTS LIST AND DESCRIPTIONS (Continued)

COILS (RF-IF)

ITEM No.	USE	REPLACEMENT DATA					NOTES
		WEBCOR PART No.	Merit PART No.	Miller PART No.	Stancor PART No.	Workman PART No.	
L1	Receiver Ant.	65P176					
L2	Receiver Osc.	65P177					
L3	1st IF	69P023-D					
L4	2nd IF	69P024-D					
L5	3rd IF	69P025-D					
L6	Transmitter Osc.	65P179					
L7	Final	65P179					
L8	Transmitter Ant.	65P175					

TRANSFORMER (DRIVER)

ITEM No.	TURNS RATIO		REPLACEMENT DATA					NOTES
	PRI.	SEC.	WEBCOR PART No.	Merit PART No.	Stancor PART No.	Thordarson PART No.	Triad PART No.	
T1	2.4	1	67P099					

TRANSFORMER (AUDIO OUTPUT)

ITEM No.	IMPEDANCE		REPLACEMENT DATA					NOTES
	PRI.	SEC. 1	WEBCOR PART No.	Merit PART No.	Stancor PART No.	Thordarson PART No.	Triad PART No.	
T2	500Ω CT	10-12Ω	67P098					
		SEC. 2						
		500Ω						

SPEAKER

ITEM No.	TYPE			REPLACEMENT DATA		NOTES
	SIZE	FIELD	V. C. IMP.	WEBCOR PART No.	QUAM PART No.	
SP1	2"	PM	10-12Ω	76P118	4A07Z8	

BATTERIES

ITEM No.	VOLTAGE	WEBCOR PART No.	REPLACEMENT DATA						NOTES
			BURGESS		EVEREADY		MALLORY		
			"A"	"B"	"A"	"B"	"A"	"B"	
M1	9V	A2969		2U6		216		M-1604	

MISCELLANEOUS

ITEM No.	PART NAME	WEBCOR PART No.	NOTES
M2	Antenna	65P178	Telescopic
M3	Crystal	65P181-*R	Receiver (Replace * with Channel Number Desired)
M4	Crystal	65P180-*T	Transmitter (Replace * with Channel Number Desired)
M5	Switch	32P189	With Return Spring (Early Versions)
	Switch	32P191	With Return Spring (Later Versions)
	Insulator	61P515	Crystal (Fits over Crystal Pins)

CABINETS & CABINET PARTS

(When Ordering Cabinets & Cabinet Parts, Specify Model, Chassis & Color)

NAME	PART NO.	DESCRIPTION
Knob	49P381	On-Off Volume
Button	48P105	Talk-Listen
Cover Ass'y.	11X2565	
Escutcheon	78P903	Wrap-a-round

CHASSIS—TOP VIEW

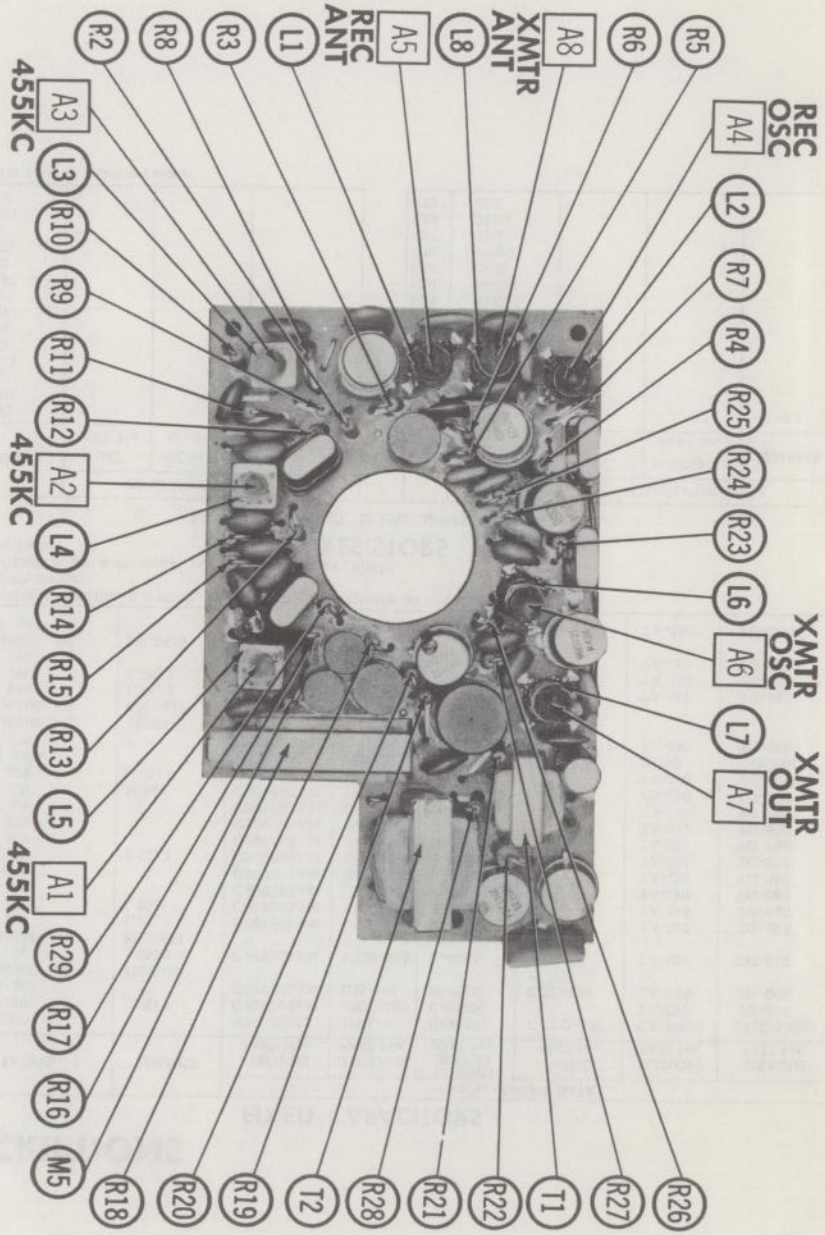

CITIZENS BAND RADIO MANUAL

The growing and widespread popularity of Citizens-band radio has opened an entire new field in communications. Since the introduction of the Class-D service several years ago, there has been an increasing demand for additional servicing facilities to handle this type of two-way equipment. Thus, there are excellent opportunities awaiting qualified technicians who want to build a more profitable business by expanding into the Citizens-band field.

The primary purpose of this manual is to provide data needed by the user or technician. An introductory editorial section at the front describes typical CB equipment, the type of test equipment needed, license qualifications for servicing, and a number of helpful troubleshooting hints.

Complete PHOTOFACT® service data have been included for 34 popular models. The coverage includes schematics, photos showing component layout and identification, alignment instructions, complete parts lists and replacement data, and other valuable information which will make CB servicing easier and more profitable.

COVERING THESE BRANDS:

CADRE	GONSET	MAGNAVOX
CAPITAL	HALLICRAFTERS	PHILMORE
CITI-FONE	HEATH	POLY-COM
EICO	ITT	VOCALINE
GLOBE	LAFAYETTE	WEBCOR
	LA SALLE	

HOWARD W. SAMS & CO., INC.
THE BOBBS-MERRILL COMPANY, INC.
Indianapolis • New York

$3.50
$4.40 IN CANADA
CB-3
06054