VOL. 1

A Howard W. Sams® PHOTOFACT PUBLICATION • CB-1

Howard W. Sams

CITIZENS BAND RADIO MANUAL

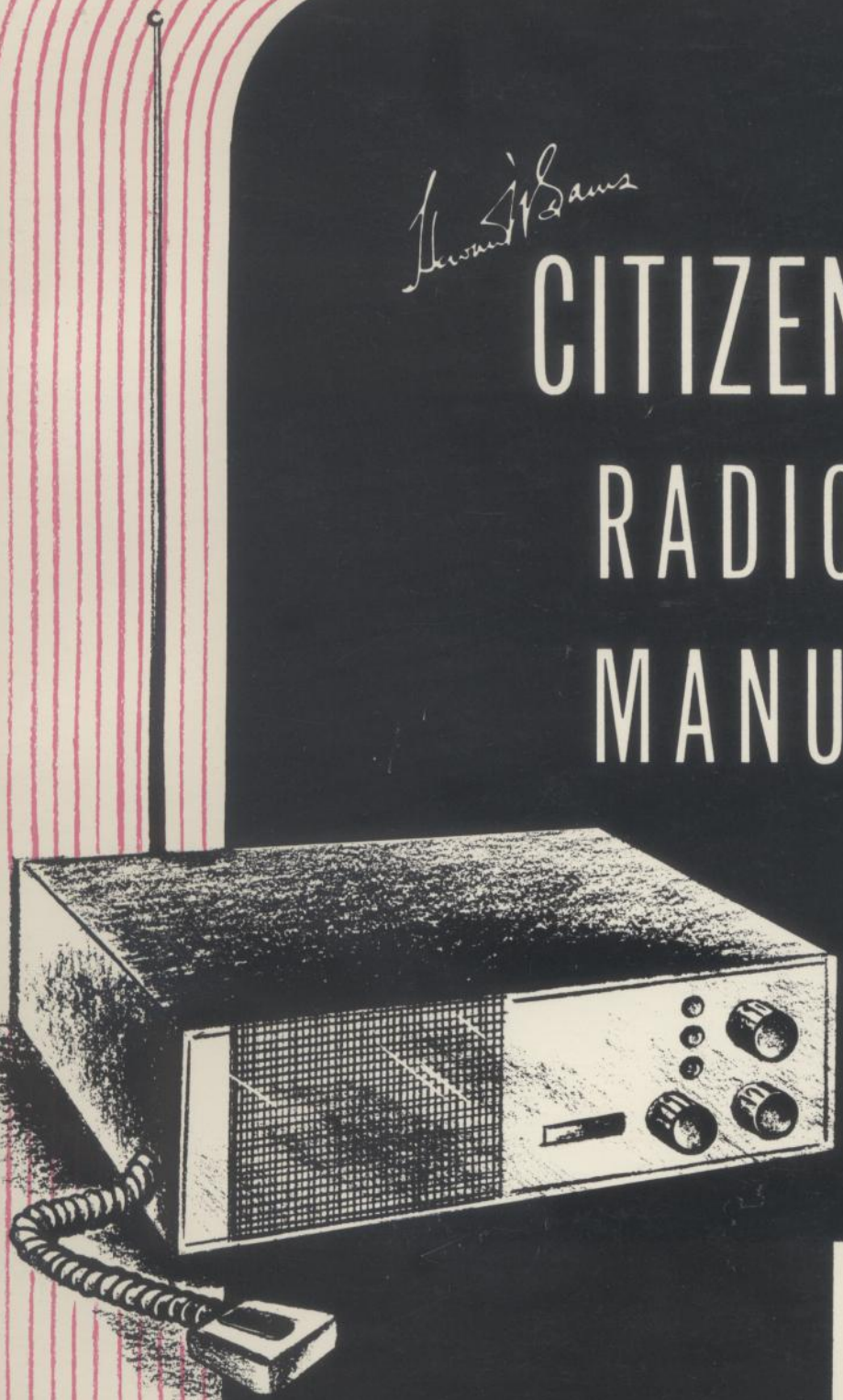

VOLUME 1

Complete PHOTOFACT® service data for 46 popular models . . . plus a special text section on CB servicing.

Howard W. Sams CITIZENS BAND RADIO MANUAL

CB 1

$3.50
$4.40 IN CANADA
Cat. No. CB-1

Howard W. Sams

CITIZENS BAND RADIO MANUAL

VOLUME I

by

The Howard W. Sams Engineering Staff

HOWARD W. SAMS & CO., INC.
THE BOBBS-MERRILL COMPANY, INC.
Indianapolis • New York

FIRST EDITION

FIRST PRINTING — NOVEMBER, 1961
SECOND PRINTING — APRIL, 1962
THIRD PRINTING — JUNE, 1964
FOURTH PRINTING — MARCH, 1965
FIFTH PRINTING—NOVEMBER, 1966
SIXTH PRINTING—AUGUST, 1968
SEVENTH PRINTING—FEBRUARY, 1971
EIGHTH PRINTING—APRIL, 1972
NINTH PRINTING—JULY, 1973
TENTH PRINTING—JUNE, 1974
ELEVENTH PRINTING—APRIL, 1975
TWELFTH PRINTING—SEPTEMBER, 1975
THIRTEENTH PRINTING—APRIL, 1976
FOURTEENTH PRINTING—DECEMBER, 1976

CITIZENS BAND RADIO MANUAL, VOL. 1

Library of Congress Catalog Card Number: 61-18464

PREFACE

Citizens-band radio is a rapidly growing field, not only in sales but also from the servicing standpoint. Close to 110,000 new CB licenses were issued by the FCC last year, and all indications point to an even greater number for 1961. Many of these licensees (and for that matter, those formerly licensed as well) are buying not just one or two pieces of equipment, but enough to equip an entire fleet of cars or trucks. It doesn't take much imagination to understand why additional servicing facilities for this type of equipment are in demand and the potential opportunity awaiting the enterprising service technician.

Before the technician can service CB radio, however, he must thoroughly understand the type of equipment he will be called on to service. Further, there are certain conditions of installation and repair which must satisfy not only the customer, but the FCC as well.

The purpose of this book, the first of a series, is to provide the needed service information for several of the most popular CB units. A text section at the beginning introduces the technician to Citizens-band radio. It describes the type of equipment used, the test equipment needed, the license qualifications required of the technician by the FCC, and finally, some of the problems encountered with CB equipment. Complete PHOTOFACT schematics covering widely used CB transceivers are included to make your servicing of CB equipment faster, easier, and more profitable.

October, 1961

TABLE OF CONTENTS

· COVERING THESE UNITS ·

TABLE OF CONTENTS

Introduction to Philips 2-in-Radio

Electronics Service Industry

- Protocols Standard Notation Schematics
- Cabinet and Chassis Photographs
- CircuitTrace
- Alignment Instructions
- Equipment Specifications
- Parts Lists and Replacement Data

• COVERING THESE UNITS •

INTRODUCTION TO CITIZENS BAND RADIO

Two-way radio servicing is one of the fastest-growing and most profitable fields in electronics today, and looking ahead one can see indications of even further expansions.

ABOUT THE EQUIPMENT

A large percentage of the low-powered two-way equipment on the market is the direct result of the Citizens radio service. Introduced to the public back in 1949, this service for the first time permitted short-range radiotelephone communications in connection with either business or personal activities. At that time, all operation was confined by law to frequencies in the UHF region between 460 and 470 mc. Only two classes of licenses—A and B—were available, and any citizen of the United States 18 years of age or older was eligible.

Class-A equipment was permitted to operate with a maximum input power of 60 watts to the final stage of the transmitter, as opposed to only 5 watts for Class-B units. This of course meant that, all things being equal, a Class-A station could provide more reliable communications over a greater area. Moreover, a number of frequencies were available for Class-A operation (see Table 1), whereas Class-B units were permitted only one (465 mc).

464.75	465.25	465.70	466.15
464.80	465.30	465.75	466.20
464.85	465.35	465.80	466.25
464.90	465.40	465.85	466.30
464.95	465.45	465.90	466.35
465.05	465.50	465.95	466.40
465.10	465.55	466.00	466.45
465.15	465.60	466.05	
465.20	465.65	466.10	

Table 1. Class-A frequencies (mc).

During the early days of CB radio, equipment for either class was expensive. This was especially true for Class-A units, which had to meet much more rigid FCC requirements in connection with frequency tolerance, etc. Production of CB equipment was more or less on an experimental basis anyway, because it was hampered by the many problems associated with equipment operating at ultrahigh (UHF) frequencies.

Eventually, some reasonably priced Class-B equipment began appearing on the market. This of course boosted the popularity of Class-B units, especially among those who could not afford the more expensive Class-A units.

Still, CB radio was not too popular—and cost was not the only reason. For one thing, the operating frequencies assigned to both classes limited their usefulness. Unlike lower-frequency radio waves, which tend to bend and be reflected from objects enroute to the receiving antenna, UHF waves act like a beam of light. That is, they travel in more or less a straight line between the transmitting and receiving antennas, and are attenuated (or even blocked completely) by intervening objects such as trees, buildings, or terrain. Because of these line-of-sight characteristics and the relatively low-power limitations of CB equipment, reliable communication was limited to a short distance—sometimes only half a mile or so.

Not until the new Class-D service was introduced in the fall of 1958 did CB radio get off to a real start. At that time, the FCC reallocated a space in what formerly was the 11-meter amateur band for use by the Class-D service. Twenty-two channels ranging from 26.965 to 27.225 mc were assigned exclusively

26.965	27.035	27.115	27.185
26.975	27.055	27.125	27.205
26.985	27.065	27.135	27.215
27.005	27.075	27.155	27.225
27.015	27.085	27.165	*27.255
27.025	27.105	27.175	

* SHARED WITH STATIONS IN OTHER SERVICES

Table 2. Class-D frequencies (mc).

for Class-D operation, and shortly thereafter a twenty-third channel (27.255 mc) was made available on a shared basis with stations in other services. Table 2 lists the Class-D frequencies. Notice that most are separated by only 10 kc, whereas those for Class-A operation are separated by 50 kc. This means Class-D equipment must be quite selective; also, the bandwidth occupied by the transmitted signal must be held within specified limits. Some Class-D channels are separated by more than 10 kc, where the Class-C frequencies are interspersed. The Class-C service is used solely for remote control of

model airplanes or boats, garage doors, etc.; radiotelephone communication is not permitted.

Through the Class-D service, Citizens-band radio now provides the public with a practical means of communication. The lower frequencies used in Class-D operation overcome, to some degree, the line-of-sight characteristics experienced at UHF. Thus, not only is a somewhat greater range provided, but also better coverage within a given area.

CITIZENS-BAND RADIO AND THE TECHNICIAN

Many persons had never even heard of Citizens-band radio until the Class-D service was announced. Since then, however, its popularity has swept the country and it now represents big business. As an example, the FCC issued close to 110,000 new CB licenses in 1960, and it expects to greatly exceed even this number by the end of 1961. Some licensees purchase only a minimum number of units; on the other hand, many businesses buy enough to equip a fleet of cars or trucks. What does all this mean to the service technician? Simply that tremendous opportunities await those who are equipped to install and maintain two-way equipment. The service technician who gets in on the ground floor can build up a profitable business.

At present, CB radio can be found almost everywhere—on boats, trains, tractors, planes, and in cars, homes, and offices. It serves business, industry, state and local governments, civil defense, or simply provides a means of personal communications between individuals.

The business of servicing CB radio is almost unlimited. Many technicians specialize in two-way radio equipment exclusively; others include it in with their regular radio and television repair work.

WHO CAN SERVICE CB GEAR?

Not just anyone can service CB equipment—or, for that matter, any other type of two-way radio gear. The FCC states that any repairs, modifications, or adjustments which can affect proper (legal) operation must be performed by, or under the direct supervision of, a person holding a second-class or higher commercial radiotelephone license. When such repairs or adjustments are made by an unlicensed person, however, the responsibility for proper operation afterward rests with the holder of the commercial license. Regardless of how much a person may know about two-way radio, he must not attempt to service two-way equipment unless either requirement is met.

These restrictions would seem to present somewhat of a problem to manufacturers of CB radio kits. However, there is a simple solution whereby persons with little or no technical knowledge can assemble and put such equipment into operation legally. Critical circuits such as the oscillator—which might cause illegal operation if not assembled and adjusted properly—are wired, pretuned, and sealed at the factory. This is necessary to conform with FCC regulations and thus make it possible for a person with no commercial radiotelephone license to assemble a kit. Naturally the manufacturer is no longer responsible for proper operation of the equipment after a seal is broken or the adjustment tampered with.

Some minor repairs—such as replacing tubes, repairing or installing antenna connectors, or replacing defective components in the receiver section—can be made by unlicensed persons. However, some tubes should not even be replaced except by a qualified person. For example, replacing a tube in a fixed (but not crystal-controlled) oscillator stage of a Class-B transceiver operating in the UHF range often requires readjustment of this circuit to put the unit on frequency. The best policy for an unqualified person to follow is this—if not sure about what can or cannot cause illegal operation, he should not attempt any maintenance!

The FCC is concerned only with the operation of the transmitter—not the receiver. There is one exception, however, and that is the transceiver. Most Citizens-band equipment is of this type, in which certain stages function not only as part of the receiver, but also become part of the transmitter when the push-to-talk button is depressed. Hence, it is possible that repairs or modifications in the receiver circuits of some transceivers could cause illegal operation when the unit is transmitting.

It's best, then, for a technician who plans on servicing and installing CB radio equipment to obtain at least a second-class radiotelephone license. There are a number of books that will help in preparing for the examination.

The test itself is not too difficult. The average service technician has a rather wide technical background anyway, and with some additional study along the proper channels he should have little trouble making the grade.

TEST EQUIPMENT NEEDED

Most service shops already have the basic test instruments needed for servicing CB equipment. A VOM with a sensitivity of at least 20,000 ohms per volt will be very helpful, along with a VTVM.

When circuit alignment becomes necessary, an accurate and stable signal generator (preferably crystal-controlled) will be needed. It should be capable of covering frequencies from 150 kc to 30 mc and have provision for modulating the output signal. Also, it should be capable of delivering a signal of less than one microvolt, for the purpose of checking receiver sensitivity. Such a generator is also quite useful in tracking down defects within the circuitry.

The best method of checking tubes is by substitution; however, a general-purpose tube checker will prove useful for confirming shorts, leakage, low emission, and other types of tube defects—some of which are not always readily apparent.

Some type of DC power supply will be needed for the bench, since most CB units operate from DC as well as AC. A DC bench supply can be made by

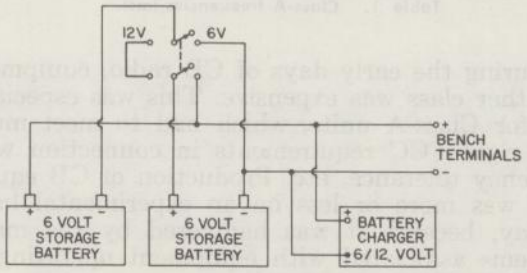

Fig. 1. A 6/12 volt DC bench power supply.

connecting storage batteries together, as shown in Fig. 1. This arrangement will suffice; however, it does require somewhat more space than the battery-eliminator type. The filtered power supply used for servicing transistor and hybrid radios is preferred. It should deliver both 6 and 12 volts DC and be capable of being varied above and below these values to simulate the DC voltage variations encountered during normal operation. It should also deliver sufficient current; one designed to provide 10 amperes continuously or 20 intermittently is adequate.

Several other items will be needed before two-way equipment can be serviced effectively. Some are absolutely necessary; others are merely refinements that will make the job that much easier.

First is some type of dummy load, to be used during transmitter adjustments. It can be either a commercial dummy antenna, or strictly "home-brew." Fig. 2 shows an easily-built dummy load.

If Class-A or -B Citizens-band equipment is to be serviced, another signal generator is required. It must provide signals up to 470 mc and be extremely accurate. If the signal attenuator is calibrated in microvolts, this will also be helpful.

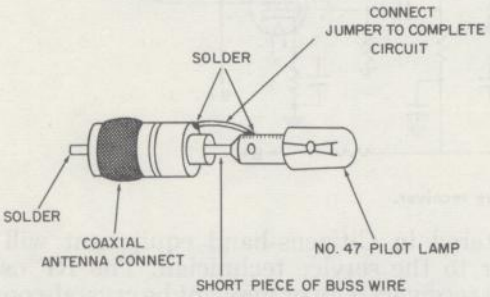

Fig. 2. A simple dummy load.

Because of the relatively small plate input power permitted for Class-B, -C, and -D operation, it is important that the transmitter provide the maximum output power (without exceeding the legal input, of course). A valuable instrument for measuring the output of a transmitter is the RF wattmeter. Two types are in use—the terminating and the in-the-line meter. The former terminates the transmitter with the proper load impedance and, at the same time, provides an indication of the RF power output in watts. The in-the-line type reads the wattage (when connected in series with the antenna lead) but does not act as a terminating load. Therefore, the transmitter must be terminated by some other means. There are instruments available which, although not providing an actual measure in wattage, give an indication of relative RF output and indicate when the maximum is attained. These devices usually cost much less than a wattmeter and will suffice in many cases. If an RF wattmeter is already on hand, so much the better.

Checking the operating frequency of transmitters is a routine procedure around the shop; in fact, it should be part of every service job. For this, some type of frequency meter is required. It also is available in several forms and most are fairly expensive. One of the most popular types is the heterodyne frequency meter. With this instrument, the signal from a built-in oscillator is heterodyned with the transmitter signal. The meter is adjusted for a zero beat, and the frequency of the signal in question is then determined directly from the dial indicator or from a scale.

Another type of meter has a crystal-controlled reference frequency generated within it, and reads the difference between this frequency and the one being measured.

Regardless of the meter used, its accuracy is very important. Class-D transmitters, for example, must operate within a frequency tolerance of .005%. At a frequency of 27.005 mc, this means the signal cannot deviate more than ±1,350 cycles per second. The frequency meter should be accurate within at least .0025%. If Class-A equipment is to be serviced, the meter will have to be even more accurate, since the frequency tolerance here is only .001%. The frequency tolerance of CB equipment varies not only between the different classes, but also with the type of operation (base or mobile) and the power input.

Another instrument that can be used to advantage is the SWR (standing-wave ratio) meter, which will be discussed shortly.

SERVICING ASPECTS

Those who have had no experience with two-way radio equipment will find it quite different from radio and television. Although the basic principles for servicing are essentially the same, the procedures differ somewhat. Now the service technician will be confronted with squelch circuits, RF power amplifiers, power oscillators, and other unfamiliar circuits that have not yet found a place in broadcast-type radio and television sets.

Antennas

The average technician, even though he has had considerable experience in selecting and installing receiving antennas, will now be concerned with the transmitting aspects of antennas, such as standing-wave ratio (SWR), RF loss in the feed line, and effective elevation.

Obtaining an impedance match between a transmitter and its antenna is necessary for maximum signal transfer in any transmitter, but is even more so in CB equipment. Here the power is relatively small; hence, a good match will permit all the available signal from the transmitter to reach the radiating element of the antenna. When the impedance of the antenna does not match that of the transmitter output, a portion of the signal sent to the antenna is reflected back down the transmission line. The amount of reflected power or standing waves on the line depends on the extent of the mismatch. Reflected power represents a signal loss, since it serves no useful purpose. (There will always be a certain amount of loss, but it should be kept to a minimum.)

An SWR meter is a valuable instrument for two-way radio servicing, and its cost is low considering its purpose. Placed in series with a transmission line, it will show the amount of power being reflected. This is expressed as a standing-wave ratio; typical readings are 1:1, 2:1, or 3:1. The lower the ratio, the better. A ratio of 1:1 or 1.5:1 is pretty good; 2:1 isn't bad, but could be improved. High SWR readings can usually be traced to improper length of one or more antenna elements for the frequency of oper-

ation, improper antenna, etc. Antenna height and surrounding objects will also influence the SWR. When operation is planned over several CB channels, the SWR readings will vary somewhat with the operating frequency.

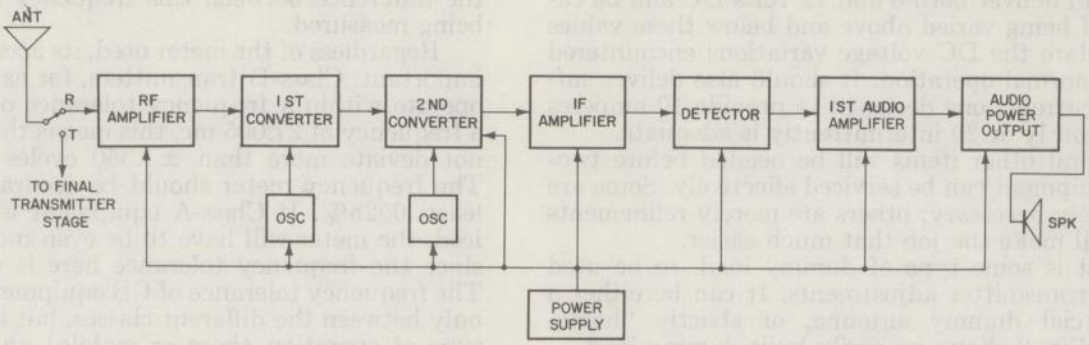

Fig. 3. Block diagram of a dual-conversion superheterodyne receiver.

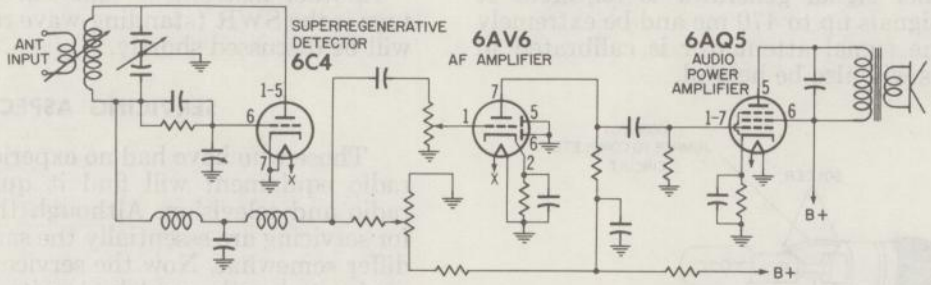

Fig. 4. A basic superregenerative receiver.

One of the most important things to remember about CB antennas—or any other type of two-way radio antenna for that matter—is to install it as high as possible. Even with a mere 5-watt input, effective communications can be provided over a considerable area as long as the antenna location is selected wisely. FCC restrictions limit the height of CB antennas to 20 feet above the man-made or natural structure on which they are mounted. This presents somewhat of a problem as far as height is concerned. If the antenna is mounted on the ground it must not exceed 20 feet. This same antenna, however, can be mounted up to 20 feet above the roof of a 200-foot building and still be legal. The idea is to install it at a point of maximum effective elevation and thereby take full advantage of available RF power.

Receivers

Another point should be remembered in connection with the servicing of CB equipment: low-powered radio signals call for extremely sensitive receivers. Moreover, since the channels are separated by only 10 kc in the Class-D service, the receivers must also be extra selective if adjacent-channel interference is to be avoided. For these reasons, most receivers are of the dual-conversion type shown in Fig. 3. The only basic difference between it and a conventional superhet circuit is the addition of a second converter stage. Its purpose is to convert the high IF output of the first converter to an even lower value, thereby increasing both the sensitivity and the selectivity. Some manufacturers use a superregenerative circuit rather than a superheterodyne circuit. Although not as efficient as the superhet, it does provide a fair degree of sensitivity and selectivity with a minimum of components. A basic superregenerative circuit is shown in Fig. 4.

Except for crystal-controlled oscillators, squelch circuits, and RF power amplifiers, most circuits encountered in Citizens-band equipment will be familiar to the service technician. The RF oscillator in CB receivers may or may not be crystal-controlled, but those in the transmitter almost always are. Some receivers have an oscillator circuit that can be changed back and forth from crystal-controlled to tunable by means of a switch. Such a circuit is shown in Fig. 5. When switch SW1 is in position 1, the frequency of oscillation is determined by crystal M1, and in position 2 by crystal M2. In position 3 the receiver is continuously tunable over the band by means of tuning capacitor C1. Except for the crystals and the switching arrangement, this is a conventional oscillator circuit.

Other stages such as the RF and IF amplifiers or the audio and power amplifiers and detectors are usually of conventional design and may vary only in component values, methods of coupling, etc. In most CB transceivers the conventional first audio stage of the receiver acts as a speech amplifier during the transmitting function, and the audio-output stage doubles as a modulator to give the carrier its voice. The servicing procedures are the same for

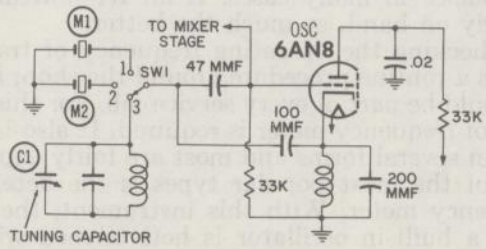

Fig. 5. A combination fixed-frequency and tunable oscillator.

these circuits as for any other types of radio equipment, and the usual precautions about unnecessary disturbing of adjustment and lead dress when replacing components in RF and IF circuits should be followed.

Recently a number of transistorized CB transceivers ranging in size from coat-pocket units to hand-carried jobs have appeared on the market. Often these units contain printed-circuit boards, which require special attention. For example, be sure a suspected component is defective before removing it from the circuit because other components, usually spaced very close together on the board, are easily damaged. Also be sure to use a low-wattage soldering iron when removing components, to prevent damaging the board.

In addition, be cautious when checking transistor circuits with an ohmmeter. The voltage from some ohmmeters is high enough to damage components.

Most tests in transistor circuits can be performed with a good VOM; special equipment need not be purchased for this purpose. Numerous books are available showing how transistors themselves can be tested with an ohmmeter. Of course, those who intend to specialize in transistor equipment servicing will find special test equipment a time saver.

Transmitters

The transmitter circuits in CB equipment are very simple. Some have nothing more than a crystal-controlled power-oscillator stage that feeds directly into the antenna system. However, most have a final RF amplifier following the oscillator. The most important consideration in servicing CB transmitters is to make sure the unit is operating on the correct frequency. The fact that crystals are guaranteed to operate within a specified tolerance does not mean they cannot operate off-frequency. (In fact, they often do.) Off-frequency operation can be caused by using the wrong type of crystal or tampering with the correct one, improper tuning (tuning up on the wrong harmonic, for example), replacement of parts with those having the incorrect value or tolerance, and failure to retune after replacement of the oscillator tube—to name just a few. All defective components in critical circuits such as the oscillator must be replaced with those having the same value. By the way, don't make the mistake of installing a standard fixed-value component for one that is temperature-compensated. The results may be satisfactory for fifteen or twenty minutes, and then off-frequency operation may result due to drift. The two biggest reasons for violation notices issued by the FCC to CB'ers are improper and off-frequency operation. A large majority of the latter are caused by unqualified persons tampering with equipment. Retuning the transmitter RF stages for maximum efficiency, checking the plate power input to the final stage, and checking the operating frequency should be part of every service job—even though only a tube has been replaced. The plate input power is computed by multiplying the plate voltage and the plate current in the final RF stage.

In multichannel transmitters, all adjustments should be made with the selector set on the center frequency. For example, if Class-D Channels 1, 2, and 3 are to be used, the selector should be in the Channel-2 position. This will provide compromise operation over the other channels. In checking transmitter operation, the amount of RF power output will vary somewhat on different frequencies.

After completing transmitter repairs, checking operation on all available channels, and making the necessary adjustments, make a final check of the frequency under varying voltage conditions. For units operating from AC, a *Variac* or similar device capable of producing a variable-AC source voltage will have to be used. An adjustable 6/12VDC supply will be needed for DC equipment. When the frequency of a unit designed to operate on 115 volts AC is being checked, it is wise to vary the source voltage from, say, 95 to 130 volts. The operating frequency should remain within the legal limits while this is being done. Battery-operated sets can likewise be checked by varying the 6-volt DC source from 5 to 7.5 volts, and the 12-volt source from 10 to 14 volts.

Power Supplies

Most CB equipment is designed to operate from more than one source voltage. Some operate strictly from AC; others use a universal power supply, permitting operation from AC as well as one or more DC voltages. The universal supply not only makes

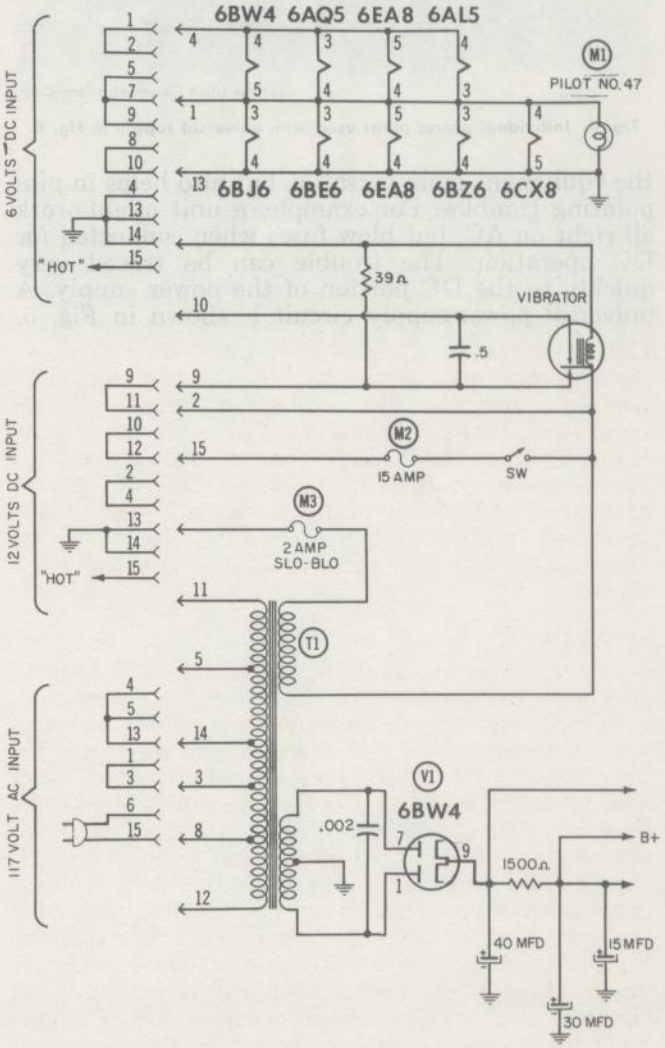

Fig. 6. A universal power-supply circuit.

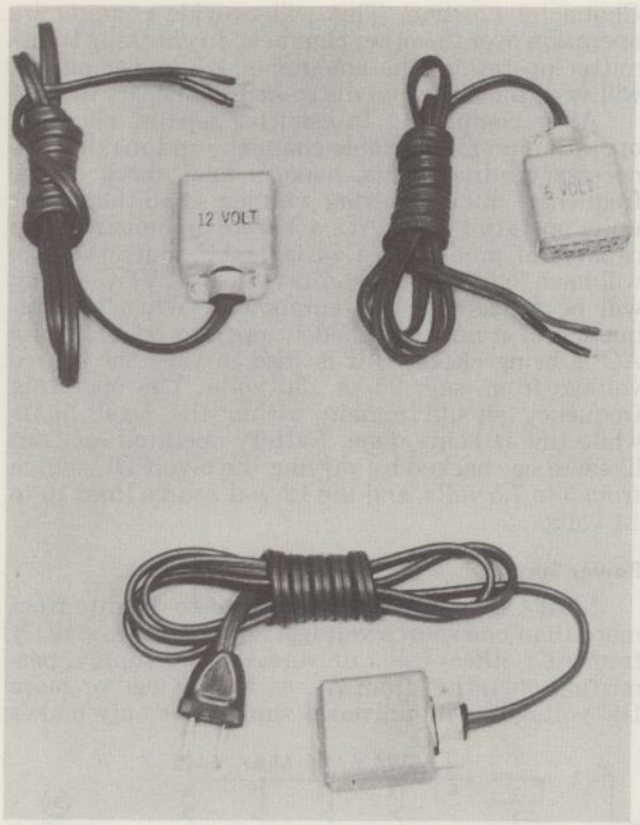

Courtesy Utica Communications Corp.

Fig. 7. Individual power plugs used with universal supply in Fig. 6.

the equipment more versatile, but also helps in pinpointing troubles. For example, a unit might work all right on AC, but blow fuses when connected for DC operation. The trouble can be traced very quickly to the DC portion of the power supply. A universal power-supply circuit is shown in Fig. 6. Those who have serviced some of the older auto radios should be familiar with vibrator power supplies. Notice the conventional full-wave AC power supply at the bottom. Directly above is a vibrator type designed for either a 6- or 12-volt DC input. A single multielement socket on the transceiver accommodates all the inputs, with individual plugs (Fig. 7) between the different voltage sources and this connector. Each plug is labeled with its function so that, when connected to the transceiver, it will provide the proper connections.

Noise

Noise is a big problem in CB equipment, particularly at Class-D frequencies. The chief complaints will be generator whine, ignition noise, and static. Although most Class-D units incorporate noise-limiting circuits, they are not always adequate and additional noise-limiting devices must be used. It is true that the conventional bypass capacitors installed on the generator, voltage regulator, coil, and distributor will eliminate noise in the standard auto broadcast receiver. However, they are quite ineffective at 27 mc, because of the inductance introduced by the foil windings. Where noise is a problem, such capacitors should be replaced with noninductive coaxial types.

A HELPING HAND

To effectively service any type of radio equipment you will need a schematic diagram. This is especially true when working with unfamiliar circuitry. Replacing defective components in CB equipment with the exact value is important, and sometimes even mandatory. The following material contains schematics of current Citizens-band equipment, together with complete servicing data, including parts lists, tube and component layout and identification, and alignment instructions.

APELCO MODEL AR-9

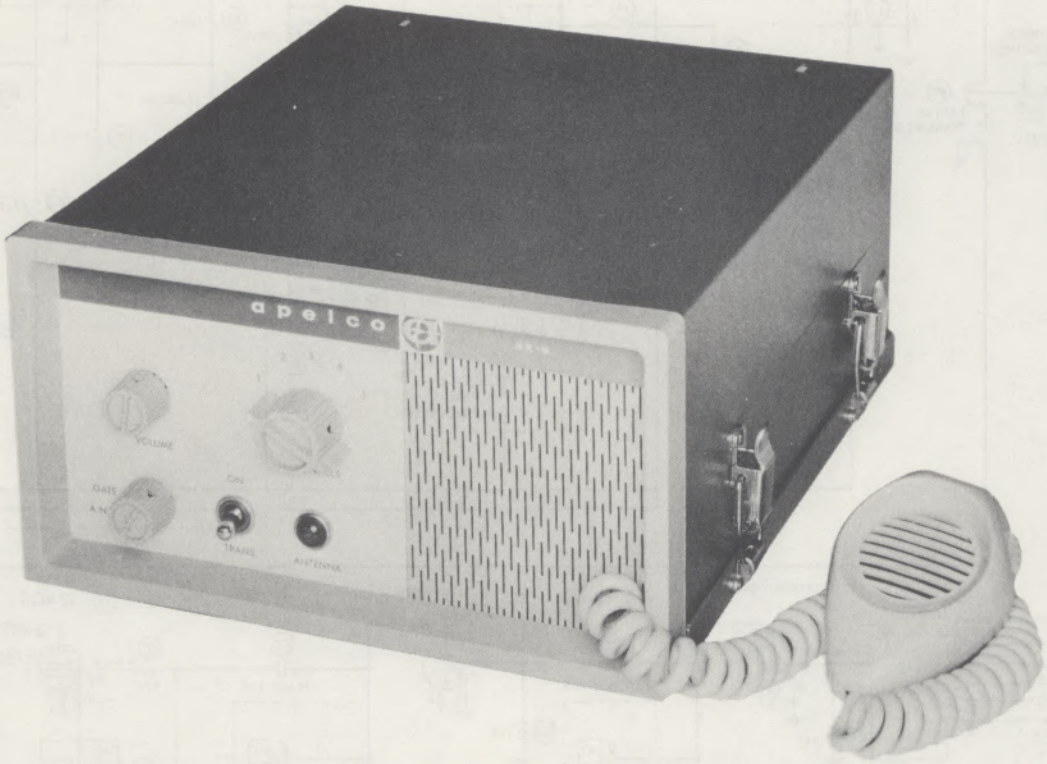

APELCO MODEL AR-9

TRADE NAME	Apelco Model AR-9
MANUFACTURER	Apelco Co., 213 E. Grand Ave., South San Francisco, California
TYPE SET	Battery Operated 9 Tube Crystal Controlled Citizens Band Transmitter-Receiver (Some versions operate on AC)
POWER SUPPLY	12 Volt Storage Battery RATING 4.5 Amp @ 12.6 Volts DC
TUNING RANGE	Any 5 of Citizens Band Channels 1 thru 22

NOTICE

ONLY THOSE PERSONS PROPERLY LICENSED BY FCC ARE PERMITTED TO MAKE CRYSTAL SUBSTITUTION OR EFFECT REPAIRS ON THE TRANSMITTER PORTION OF THIS UNIT.

HOWARD W. SAMS & CO., INC. Indianapolis 6, Indiana

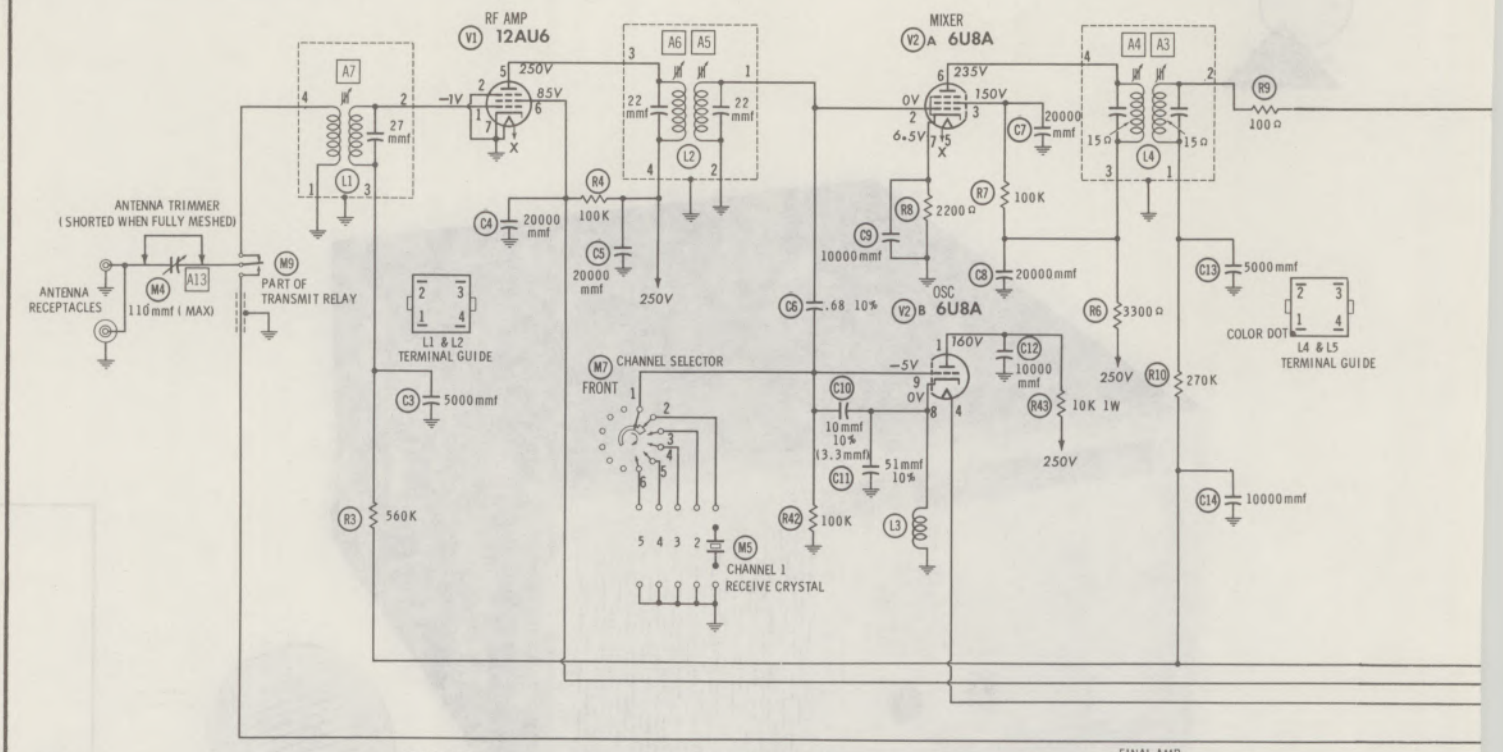

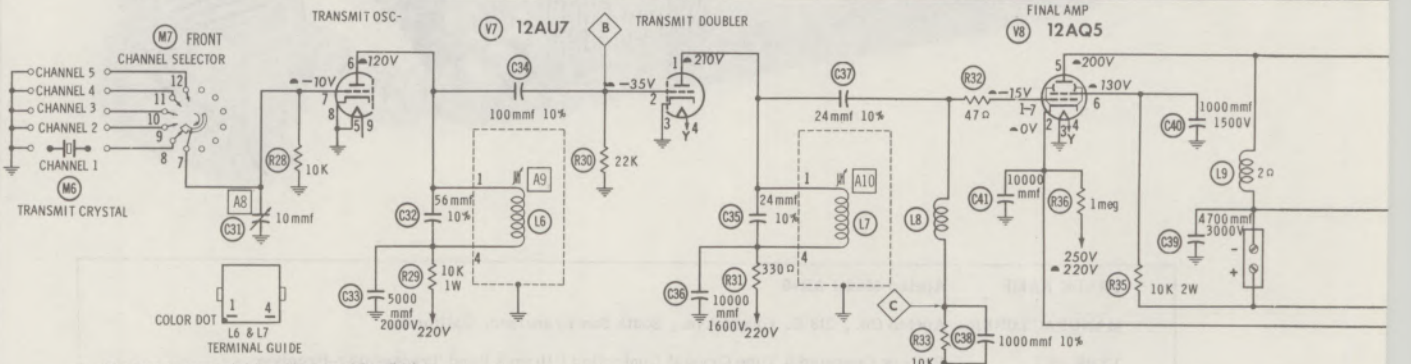

1. DC voltage measurements taken with vacuum tube voltmeter; AC voltages measured with 1000 ohm per volt voltmeter.
2. Socket connections are shown as bottom views.
3. Measured values are from socket pin to common ground.
4. Line voltage maintained at 117 volts for voltage readings.
5. Nominal tolerance on component values makes possible a variation of ±15% in voltage and resistance readings.
6. Volume control at maximum, no signal applied for voltage measurements.

NUMBERS ASSIGNED TO COILS, SWITCHES, PLUGS, SOCKETS, AND TRANSFORMERS ARE TO FACILITATE CIRCUIT TRACING OR COMPONENT REPLACEMENT AND MAY NOT NECESSARILY BE FOUND ON THE UNIT.

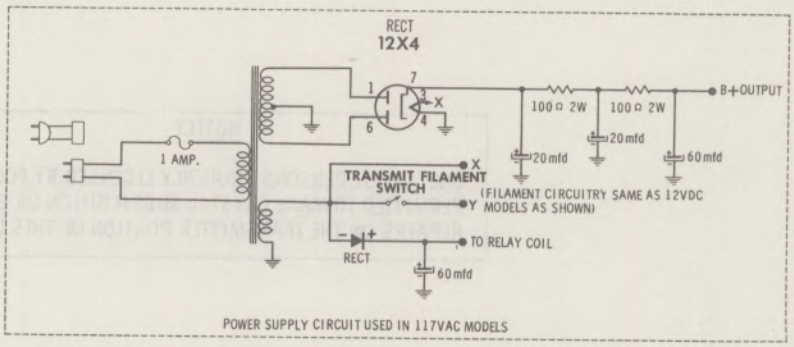

POWER SUPPLY CIRCUIT USED IN 117VAC MODELS

⊖ SEE PARTS LIST FOR ALTERNATE VALUE OR APPLICATION

DC COIL RESISTANCE VALUES UNDER ONE OHM NOT SHOWN ON SCHEMATIC DIAGRAM

ARROWS ON CONTROLS INDICATE CLOCKWISE ROTATION (CONTROL VIEWED FROM SHAFT END)

A PHOTOFACT STANDARD NOTATION SCHEMATIC

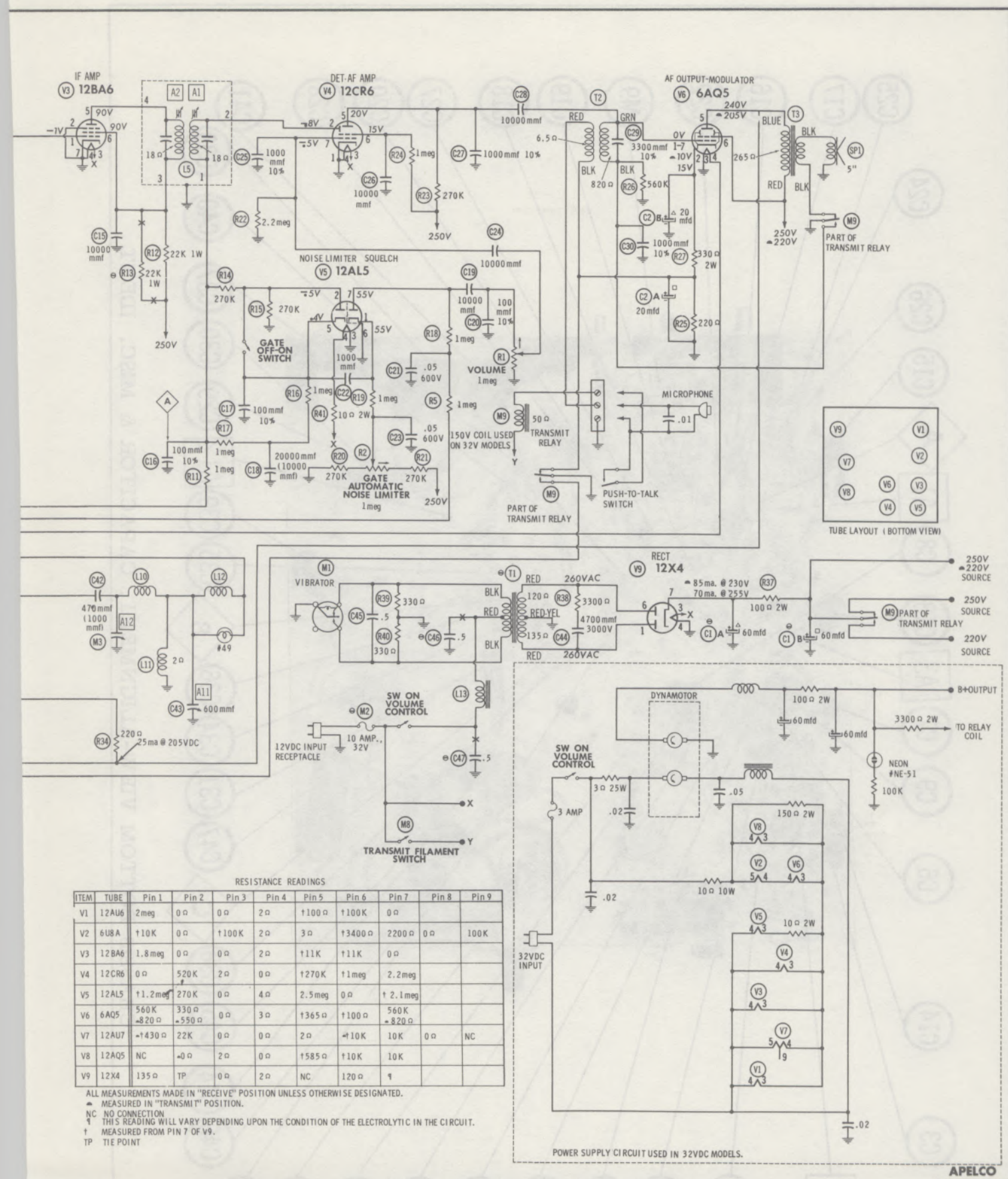

RESISTANCE READINGS

ITEM	TUBE	Pin 1	Pin 2	Pin 3	Pin 4	Pin 5	Pin 6	Pin 7	Pin 8	Pin 9
V1	12AU6	2meg	0Ω	0Ω	2Ω	†100Ω	†100K	0Ω		
V2	6U8A	†10K	0Ω	†100K	2Ω	3Ω	†3400Ω	2200Ω	0Ω	100K
V3	12BA6	1.8meg	0Ω	0Ω	2Ω	†11K	†11K	0Ω		
V4	12CR6	0Ω	520K	2Ω	0Ω	†270K	†1meg	2.2meg		
V5	12AL5	†1.2meg	270K	0Ω	4Ω	2.5meg	0Ω	† 2.1meg		
V6	6AQ5	560K ⌒820Ω	330Ω ⌒550Ω	0Ω	3Ω	†365Ω	†100Ω	560K ⌒820Ω		
V7	12AU7	⌒†430Ω	22K	0Ω	0Ω	2Ω	⌒†10K	10K	0Ω	NC
V8	12AQ5	NC	⌒0Ω	2Ω	0Ω	†585Ω	†10K	10K		
V9	12X4	135Ω	TP	0Ω	2Ω	NC	120Ω	¶		

ALL MEASUREMENTS MADE IN "RECEIVE" POSITION UNLESS OTHERWISE DESIGNATED.
⌒ MEASURED IN "TRANSMIT" POSITION.
NC NO CONNECTION
¶ THIS READING WILL VARY DEPENDING UPON THE CONDITION OF THE ELECTROLYTIC IN THE CIRCUIT.
† MEASURED FROM PIN 7 OF V9.
TP TIE POINT

APELCO MODEL AR-9

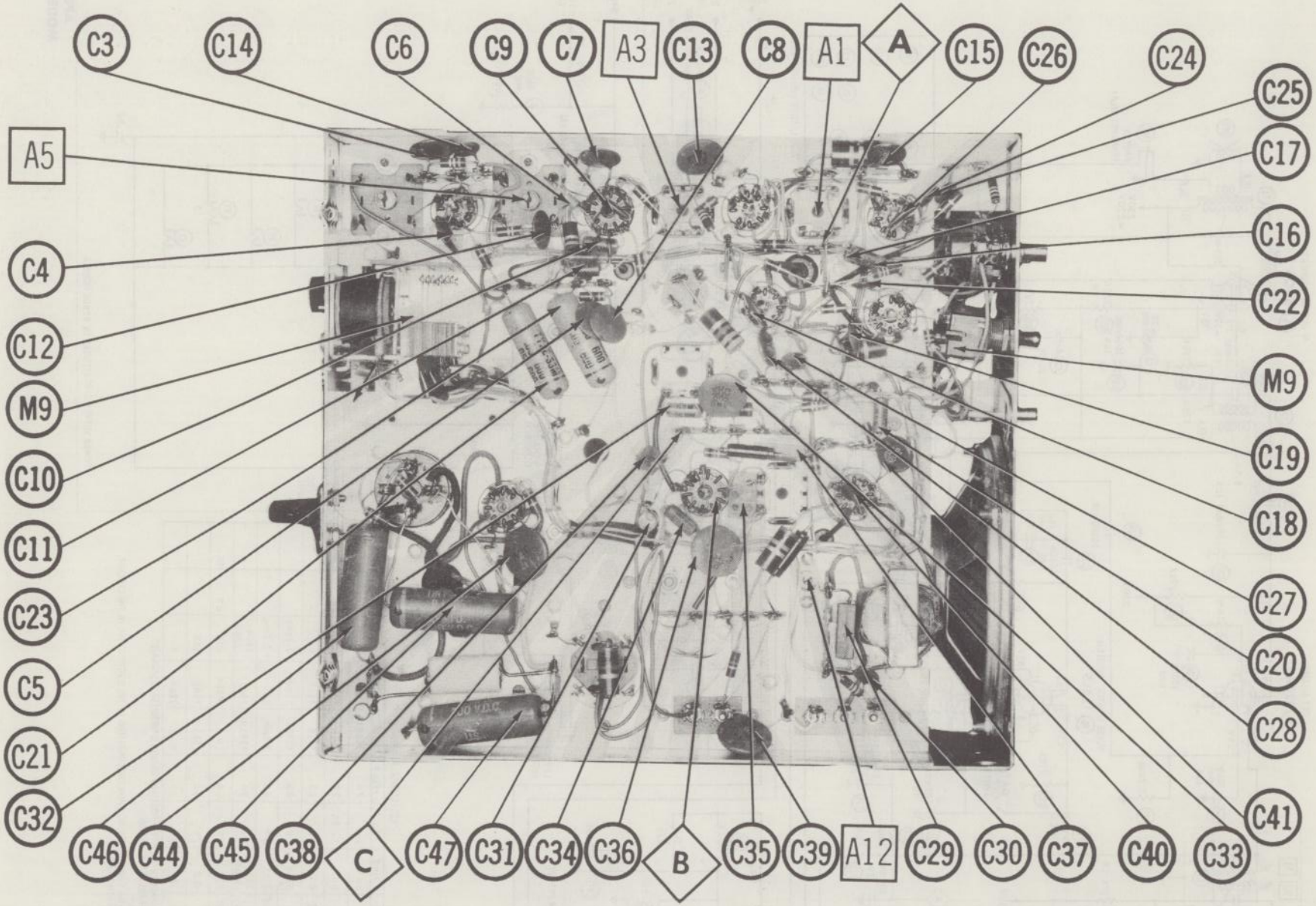

CHASSIS BOTTOM VIEW-ALIGNMENT, CAPACITOR & MISC. IDENT.

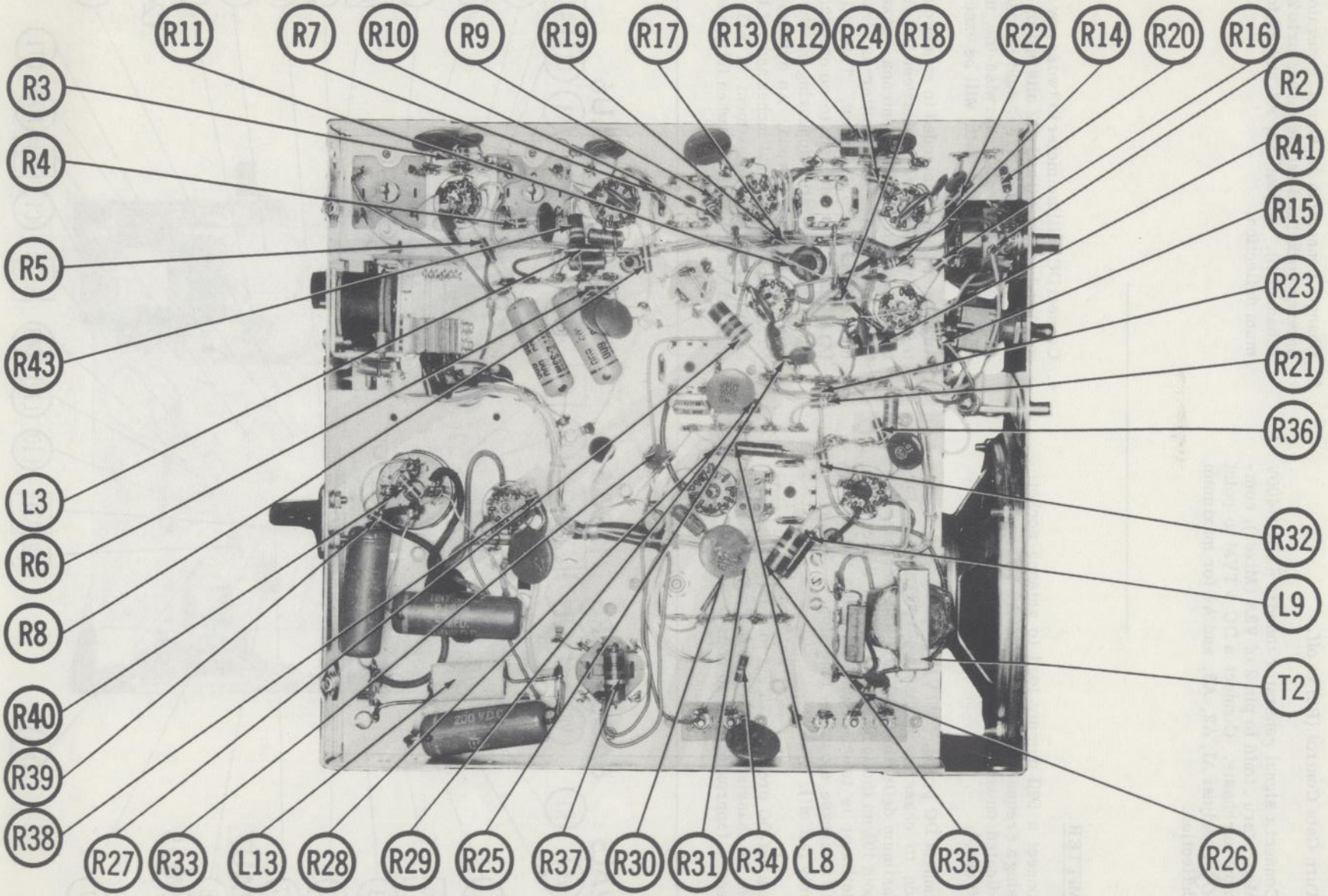

CHASSIS BOTTOM VIEW-RESISTOR & INDUCTOR IDENT.

ALIGNMENT INSTRUCTIONS

RECEIVER

Turn Gate Control (R2) to off.

1. Connect a signal generator tuned to 455KC (400∿ Mod.) thru .1mfd to pin 2 of V2A (Mixer), common to chassis. Connect a DC VTVM to point Ⓐ. Adjust A1, A2, A3, and A4 for maximum deflection.

2. Change connection of signal generator to the antenna socket and retune generator to 27.085KC (Channel 11). Adjust A5, A6 and A7 for maximum deflection.

TRANSMITTER

1. Connect a 52Ω dummy load to antenna socket. Using a Frequency Meter, adjust A8 to frequency indicated on osc. crystal for zero beat, (within 100 cps.)

2. Connect DC probe of VTVM to point Ⓑ, common to chassis. Adjust A 9 on channel 11 for maximum deflection of VTVM and then back off about 10% on the long slope. (When the crystal oscillator is tuned in one direction the output will increase slowly -- long slope -- then suddenly fall off).

3. Connect DC probe of VTVM to point Ⓒ, common to chassis. Adjust A10 for maximum deflection (approximately 30 volts).

4. Connect DC milliammeter to two screw terminal strip and adjust A11 and A12 alternately until the meter reads 25ma. Care should be taken not to exceed this current, otherwise the maximum legal plate input of 5 watts will be exceeded.

5. Adjustment A13 is intended to cancel out the internal wiring inductance between the pi section load capacitor and the antenna coaxial feed. The output of the transmitter is designed to match from 25 to 75 ohms. This adjustment (A13) may also be used to compensate for a standing wave ratio appearing on the coaxial cable feed to the antenna. An antenna may be off frequency by several inches and yet be loaded efficiently by the adjustment of A13. A12 is shorted out of the circuit when fully meshed.

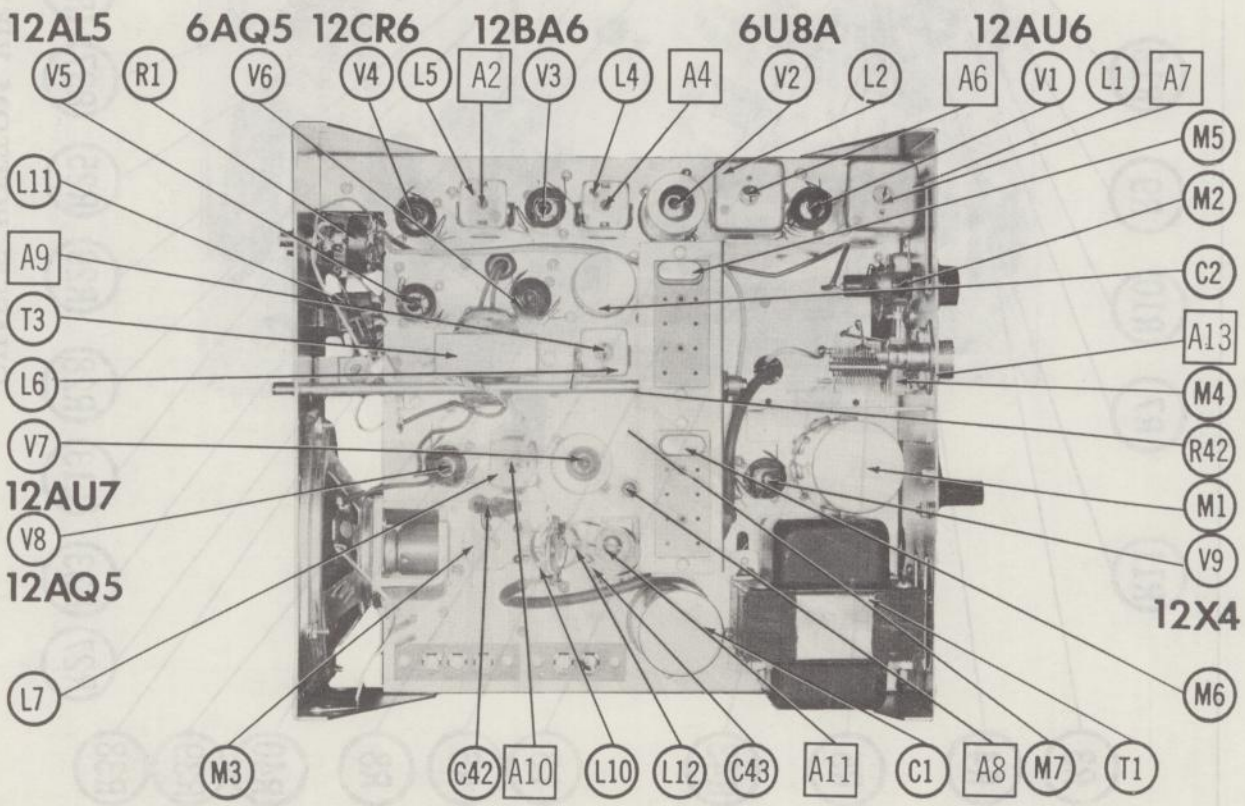

CHASSIS-TOP VIEW

PARTS LIST AND DESCRIPTIONS

TUBES

ITEM No.	USE	TYPE (GENERAL ELECTRIC / RAYTHEON / SYLVANIA)
V1	RF Amplifier	12AU6
V2	Mixer-Osc.	6U8A
V3	IF Amplifier	12BA6
V4	Det. -AF Amp.	12CR6
V5	Noise Limiter-Squelch	12AL5
V6	AF Output-Modulator	6AQ5
V7	Trans. Osc. -Doubler	12AU7
V8	Final Amplifier	12AQ5
V9	Rectifier	12X4

ELECTROLYTIC CAPACITORS

ITEM No.	RATING CAP.	RATING VOLT.	APELCO PART No.	AEROVOX PART No.	CORNELL-DUBILIER PART No.	MALLORY PART No.	PYRAMID PART No.	SPRAGUE PART No.	NOTES
C1A	▲60	450		AFH2-59	A0500	FP148	TMS-1790	TVL-1730	Note 1
B	■60	450			BR6045	TC795	TD-50-450	TVA-1714	Note 1
C2A	■20	100		AFH2-08	B0090	FP208	TMD-2075	TVL-2415	
B	▲20	100							

Note 1. AC versions use 20-20mfd in this application.

FIXED CAPACITORS

Capacity values given in the rating column are in mfd. for Paper Capacitors, and in mmfd. for Mica and Ceramic Capacitors.

ITEM No.	RATING	REMARKS	AEROVOX PART No.	CENTRALAB PART No.	CORNELL-DUBILIER PART No.	ELMENCO PART No.	MALLORY PART No.	SPRAGUE PART No.
C3	5000		BPD-005	DD-502	BYA10D5	CCD-502	B-250	5HK-D50
C4	20000		BPD-02	DD-203	BYB6S2	CCD-203	B-120	5HK-S20
C5	20000		BPD-02	DD-203	BYB6S2	CCD-203	B-120	5HK-S20
C6	.68 10%		NPO-SI .68	TCZ-R68				
C7	20000		BPD-02	DD-203	BYB6S2	CCD-203	B-120	5HK-S20
C8	20000		BPD-02	DD-203	BYB6S2	CCD-203	B-120	5HK-S20
C9	10000		BPD-01	DD-103	BYA10S1	CCD-103	B-110	5HK-S10
C10	10 10%	(3.3) †	NPO-SI 10	D6-100	L10Q1	CCD-100	GP410	10TS-Q10
C11	51 10%		NPO-SI 51	D6-500	L10Q51	CCD-500	GP450	10TS-Q50
C12	10000		BPD-01	DD-103	BYA10S1	CCD-103	B-110	5HK-S10
C13	5000		BPD-005	DD-502	BYA10D5	CCD-502	B-250	5HK-D50
C14	10000		BPD-01	DD-103	BYA10S1	CCD-103	B-110	5HK-S10
C15	10000		BPD-01	DD-103	BYA10S1	CCD-103	B-110	5HK-S10
C16	100 10%		NPO-SI 100	D6-101	L10T1	CCD-101	GP310	10TS-T10
C17	100 10%		NPO-SI 100	D6-101	L10T1	CCD-101	GP310	10TS-T10
C18	20000	(10000) †	BPD-02	DD-203	BYB6S2	CCD-203	B-120	5HK-S20
C19	10000		BPD-01	DD-103	BYA10S1	CCD-103	B-110	5HK-S10
C20	100 10%		NPO-SI 100	D6-101	L10T1	CCD-101	GP310	10TS-T10
C21	.05 600V		P688N-05	DD-503	CUB6S5	6DP-3-503	GEM-615	6TM-S50
C22	1000		BPD-001	DD-102	BYA10D1	CCD-102	B-210	5HK-D10
C23	.05 600V		P688N-05	DD-503	CUB6S5	6DP-3-503	GEM-615	6TM-S50
C24	10000		BPD-01	DD-103	BYA10S1	CCD-103	B-110	5HK-S10
C25	1000 10%		DI-1000	DD-102	5R5D1	CCD-102	GP210	10TS-D10
C26	10000		BPD-01	DD-103	BYA10S1	CCD-103	B-110	5HK-S10
C27	1000 10%		DI-1000	DD-102	5R5D1	CCD-102	GP210	10TS-D10
C28	10000		BPD-01	DD-103	BYA10S1	CCD-103	B-110	5HK-S10
C29	3300 10%		1469-0033		1R5D33	CM-20B-332K	MCJ462	MS-233
C30	1000 10%		DI-1000	DD-102	5R5D1	CCD-102	GP210	10TS-D10
C31	10 max.							
C32	56 10%		NPO-SI 56	D6-560	L10Q56	CCD-560	GP456	10TS-Q56
C33	5000 2000V			DD30-502	HVC20D5	3CCD-502	2HV-247	BL-D50
C34	100 10%		NPO-SI 100	D6-101	L10T1	CCD-101	GP310	10TS-T10
C35	24 10%		1469-000024	TCZ-24	22R5Q24	CM-19B-240K	MCB220	MS-424
C36	10000 1600V		DAC-27	DD16-103	HVE16S1	16DP-3-103	UAC-110	BL-S10
C37	24 10%		1469-000024	TCZ-24	22R5Q24	CM-19B-240K	MCB220	MS-424
C38	1000 10%		DI-1000	DD-102	5R5D1	CCD-102	GP210	10TS-D10
C39	4700 3000V			DD30-472		3CCD-502	3HV-247	30GA-D47
C40	1000 1500V		DAC-2	DD30-102	HVB20D1	3CCD-102	UAC-210	BL-D10
C41	10000		BPD-01	DD-103	BYA10S1	CCD-103	B-110	5HK-S10
C42	470	(1000) †	1468-00047		5W5T47	CM-19B-471M	MCJ244	.1FM-347
C43	600 max.							
C44	4700 3000V			DD30-472		3CCD-502	3HV-247	30GA-D47
C45	.5 200V		P288N-5		CUB2P5	2DP-5-504	GEM-205	2TM-P50

FIXED CAPACITORS (cont)

ITEM No.	RATING	REMARKS	AEROVOX PART No.	CENTRALAB PART No.	CORNELL-DUBILIER PART No.	ELMENCO PART No.	MALLORY PART No.	SPRAGUE PART No.
C46	.5 200V	Note 1	P288N-5		CUB2P5	2DP-5-504	GEM-205	2TM-P50
C47	.5 200V	Note 1	P288N-5		CUB2P5	2DP-5-504	GEM-205	2TM-P50

Note 1. Not used in some versions.
† Alternate Value.

CONTROLS

ITEM No.	RATING RESISTANCE	RATING WATTS	APELCO PART No.	CENTRALAB PART No.	CLAROSTAT PART No.	CTS-IRC PART No.	MALLORY PART No.	INSTALLATION NOTES
R1A	1meg	½	CM-16666	B-69	A47-1meg-S	Q11-137	U54	Volume
B	Shaft			Not Req.	RS-2	Not Req.	Not Req.	
C	Switch			KR-2	SWE-20	76-2	US-27	Power Off-On
R2A	1meg	½	CM-18888	B-69	A47-1meg-S	Q11-137	U54	Gate A. N. L.
B	Shaft			Not Req.	RS-2	Not Req.	Not Req.	
C	Switch			KR-1	SWE-12	76-1	US-26	Gate Off-On

RESISTORS

All wattages 1/2 watt, or less, unless otherwise listed.

ITEM No.	RATING	IRC PART No.	WORKMAN TV PART No.	REMARKS
R3	560K			
R4	100K			
R5	1meg			
R6	3300Ω			
R7	100K			
R8	2200Ω			
R9	100Ω			
R10	270K			
R11	1meg			
R12	22K 1W			
R13	22K 1W			Note 1
R14	270K			
R15	270K			
R16	1meg			
R17	1meg			
R18	1meg			
R19	1meg			
R20	270K			
R21	270K			
R22	2.2meg			
R23	270K			
R24	1meg			
R25	220Ω			
R26	560K			
R27	330Ω 2W			
R28	10K			
R29	10K 1W			
R30	22K			
R31	330Ω			
R32	47Ω			
R33	10K			
R34	220Ω			
R35	10K 2W			
R36	1meg			
R37	100Ω 2W			
R38	3300Ω			
R39	330Ω			
R40	330Ω			
R41	10Ω 2W			
R42	100K			
R43	10K 1W			

Note 1. Not used in some versions.

COILS (RF-IF)

ITEM No.	USE	APELCO PART No.	Merit PART No.	Miller PART No.	Stancor PART No.	Workman TV PART No.	NOTES
L1	Ant.	TL-61					
L2	RF	TL-62					
L3	RF Choke (1.5uh)		BC-562	4604	RTC-8516	T856	
L4	Input IF	302217K	BC-352	12-C1	RTC-8632	T607	
L5	Output IF	302225K	BC-352	12-C2	RTC-8633	T608	
L6	Osc. Plate	TL-65					
L7	Doubler Plate	TL-64					
L8	RF Choke (2uh)		BC-563	4606	RTC-8517	T857	
L9	RF Choke (15uh)			4624	RTC-8524	T862	
L10	Final Plate	TL-63					
L11	RF Choke (15uh)			4624	RTC-8524	T862	
L12	Output						
L13	Hash Choke (10uh)	T105-116T	BC-537	7825-8	RTC-9182		

PARTS LIST AND DESCRIPTIONS (Continued)

TRANSFORMER (POWER)

ITEM No.	RATING			REPLACEMENT DATA					NOTES
	PRI.	SEC. 1	SEC. 2	APELCO PART No.	Merit PART No.	Stancor PART No.	Thordarson PART No.	Triad PART No.	
T1	12VCT @ 2.7A	520VCT @ .085A		ST-86 ①					① Part #ST-89 used for AC Operation.

TRANSFORMER MIC

ITEM No.	TURNS RATIO		REPLACEMENT DATA					NOTES
	PRI.	SEC.	APELCO PART No.	Merit PART No.	Stancor PART No.	Thordarson PART No.	Triad PART No.	
T2	1	14	ST-88					

TRANSFORMER (AUDIO OUTPUT)

ITEM No.	IMPEDANCE		REPLACEMENT DATA					NOTES
	PRI.	SEC.	APELCO PART No.	Merit PART No.	Stancor PART No.	Thordarson PART No.	Triad PART No.	
T3	5900Ω	3-4Ω	ST-19					

SPEAKER

ITEM No.	TYPE			REPLACEMENT DATA		NOTES
	SIZE	FIELD	V. C. IMP.	APELCO PART No.	QUAM PART No.	
SP1	5"	PM	3-4Ω	220006	5A07	

VIBRATOR

ITEM No.	TYPE	INPUT VOLTS	FRE-QUENCY	REPLACEMENT DATA				NOTES
				APELCO PART No.	CORNELL-DUBILIER PART No.	MALLORY PART No.	RADIART PART No.	
M1	Interrupter	12.6	115~	G-8301	6301	G1601	6301	

FUSES

ITEM No.	TYPE	RATING	REPLACEMENT DATA					
			APELCO PART No.		LITTELFUSE PART No.		BUSS PART No.	
			FUSE	HOLDER	FUSE	HOLDER	FUSE	HOLDER
M2	3AG	10A ① 32V			313010 (3AG 10A 32V)	342001	AGC 10	HKP

① AC versions use 1A in this application.

MISCELLANEOUS

ITEM No.	PART NAME	APELCO PART No.	NOTES
M3	Trimmer Cap		Final Amp. Tank
M4	Trimmer Cap		110mmf Max. Antenna Series
M5	Crystal		Receiver (Order Freq. Desired)
M6	Crystal		Transmit (Order Freq. Desired)
M7	Switch		Channel Selector (Rotary Type)
M8	Switch		Transmitter Filaments (Toggle Type)
M9	Relay	579	Transmit

WIRING DATA

General-use Unshielded Hook-up Wire ..... Use BELDEN No. 8530 (Solid) Available in Ten Colors
8524 (Stranded) Available in Ten Colors
Shielded Hook-up Wire ..... Use BELDEN No. 8885
Bonding Strap ..... Use BELDEN No. 8661

MODEL CD-5 12

NOTICE

ONLY THOSE PERSONS PROPERLY LICENSED BY FCC ARE PERMITTED TO EFFECT REPAIRS OR MAKE CRYSTAL SUBSTITUTION ON THE TRANSMITTER PORTION OF THIS UNIT.

TRADE NAME	Citi-Fone Models CD 5/6, CD 5/12
MANUFACTURER	Multi-Products Co., 21470 Coolidge Highway, Oak Park 37, Michigan
TYPE SET	AC-Battery Operated 9 Tube Citizens Band Transmitter-Receiver
POWER SUPPLY	110-120 Volts AC (or) 6 Volt Storage Battery (or) 12 Volt Storage Battery
RATING	35 Watts, .36 Amp. @117 Volts AC (or) 3 Amp. @12.6Volts DC (or) 6 Amp. @6.3Volts DC (Receive)
TUNING RANGE	Any 5 of Citizens Band Channels 1 Thru 22

ALIGNMENT INSTRUCTIONS

ALIGNMENT INSTRUCTIONS—READ CAREFULLY BEFORE ATTEMPTING ALIGNMENT

Set Squelch Control fully counterclockwise.
Set Gain Control fully clockwise.
Suggested Alignment Tools: A1 Thru A8... GENERAL CEMENT #8282, 8606, 8606-L, 9295, 9440
WALSCO #2526, 2543, 2544, 2545
A9, A10..... GENERAL CEMENT #8721, 8722
WALSCO #2519

	SIGNAL GENERATOR COUPLING	SIGNAL GENERATOR FREQUENCY	OUTPUT METER	ADJUST	REMARKS
1.	High side to ungrounded tube shield floating over Mixer. Low side to chassis.	455KC (400∿ Mod.)	Across voice coil.	A1, A2, A3, A4, A5, A6	Adjust for maximum deflection.
2.	High side to antenna jack. Low side to chassis.	Frequency of channel in use.	"	A7, A8	"
3.			USE VTVM AC probe to point Ⓐ. Common to chassis.	A9	Press "Talk" button. Adjust for maximum deflection.
4.			Use Field strength meter or RF Output Indicator.	A10	Connect 27MC antenna (or 50-75Ω load) to antenna terminals and press "Talk" button. Adjust A10 for maximum deflection.

HOWARD W. SAMS & CO., INC. Indianapolis 6, Indiana

KZ353

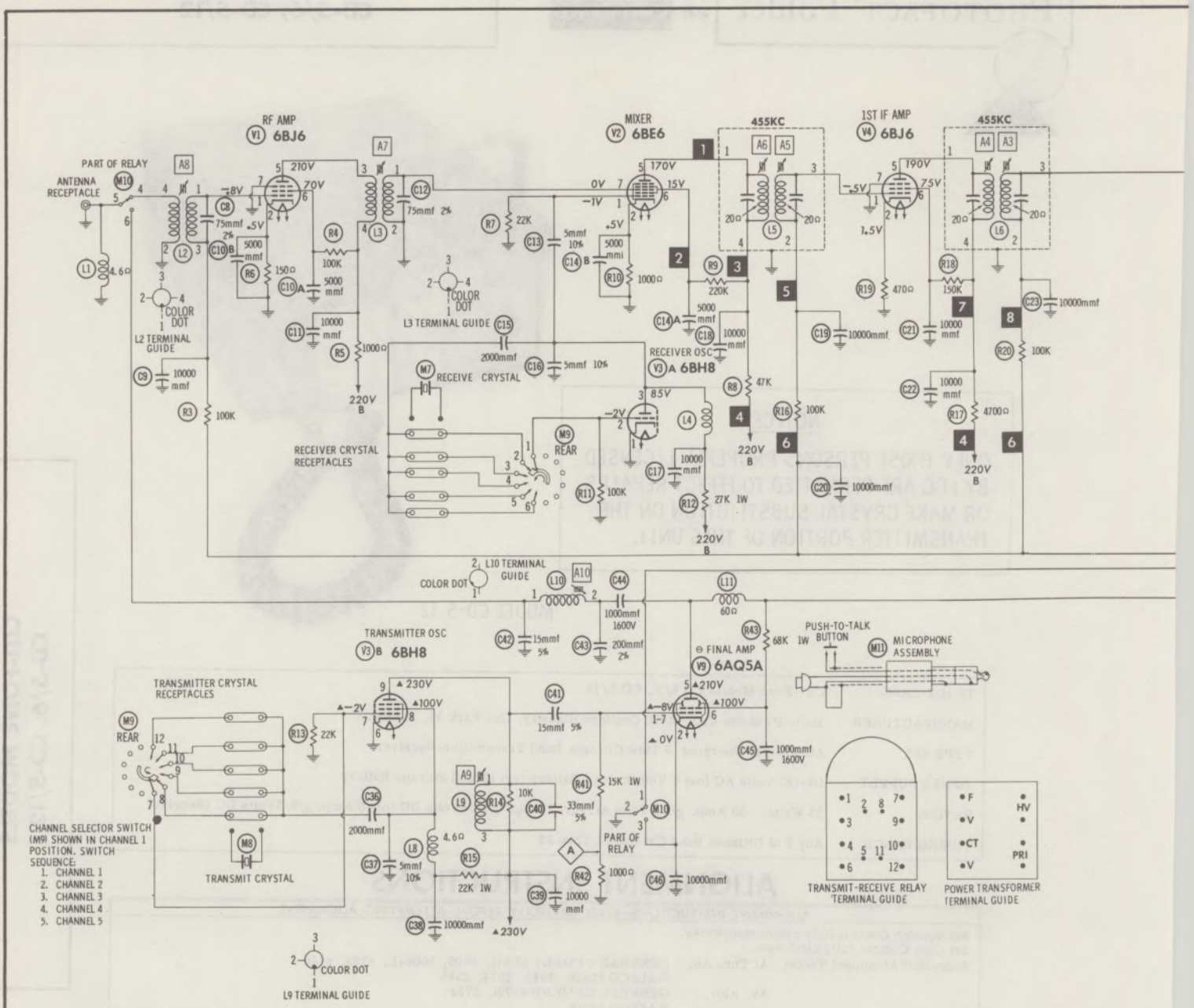

A PHOTOFACT STANDARD NOTATION SCHEMATIC
with CIRCUITRACE

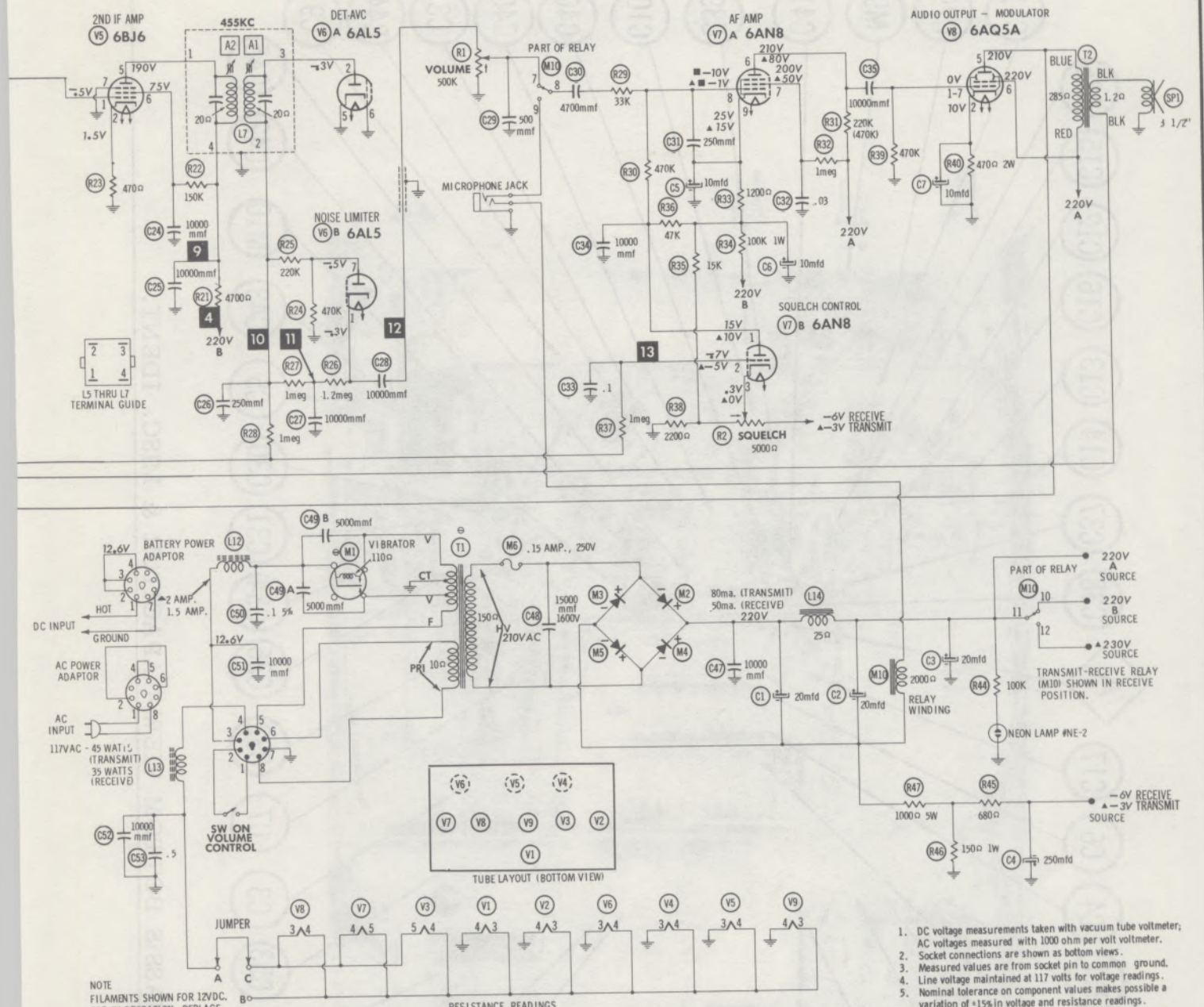

NOTE
FILAMENTS SHOWN FOR 12VDC. FOR 6V OPERATION, REPLACE T1 AND M1. (SEE PARTS LIST). CONNECT JUMPER FROM A TO B AND GROUND C. (TERMINALS LOCATED ON CHASSIS BOTTOM, REAR).

ITEM	TUBE	Pin 1	Pin 2	Pin 3	Pin 4	Pin 5	Pin 6	Pin 7	Pin 8	Pin 9
V1	6BJ6	1.8meg	150Ω	.1Ω	0Ω	↑1000Ω	↑100K	0Ω		
V2	6BE6	22K	1000Ω	.1Ω	0Ω	↑47K	↑220K	.2Ω		
V3	6BH8	0Ω	100K	↑27K	.1Ω	.1Ω	0Ω	22K	▲↑22K	▲↑25Ω
V4	6BJ6	1.8meg	470Ω	0Ω	.1Ω	↑4700Ω	↑155K	0Ω		
V5	6BJ6	1.8meg	470Ω	0Ω	.1Ω	↑4700Ω	↑155K	0Ω		
V6	6AL5	3meg	700K	0Ω	.1Ω	0Ω	0Ω	470K		
V7	6AN8	65K	2.7meg	2000Ω	.1Ω	.1Ω	↑220K	↑1meg	535K	18K
V8	6AQ5A	470K	470Ω	.1Ω	.1Ω	↑310Ω	↑25Ω	NC		
V9	6AQ5A	16K	INF ▲0Ω	.1Ω	0Ω	↑370Ω	↑68K	16K		

ALL MEASUREMENTS MADE IN "RECEIVE" POSITION WITH RECEIVER JUST SQUELCHED AND DUMMY LOAD CONNECTED UNLESS OTHERWISE DESIGNATED.
▲ MEASURED IN "TRANSMIT" POSITION.
↑ MEASURED FROM OUTPUT OF M2 AND M4.
■ MEASURED FROM CATHODE
NC NO CONNECTION

1. DC voltage measurements taken with vacuum tube voltmeter; AC voltages measured with 1000 ohm per volt voltmeter.
2. Socket connections are shown as bottom views.
3. Measured values are from socket pin to common ground.
4. Line voltage maintained at 117 volts for voltage readings.
5. Nominal tolerance on component values makes possible a variation of ±15% in voltage and resistance readings.
6. Volume control at maximum, no signal applied for voltage measurements.

NUMBERS ASSIGNED TO COILS, SWITCHES, PLUGS, SOCKETS, AND TRANSFORMERS ARE TO FACILITATE CIRCUIT TRACING OR COMPONENT REPLACEMENT AND MAY NOT NECESSARILY BE FOUND ON THE UNIT.

⊖ SEE PARTS LIST FOR ALTERNATE VALUE OR APPLICATION

DC COIL RESISTANCE VALUES UNDER ONE OHM NOT SHOWN ON SCHEMATIC DIAGRAM

ARROWS ON CONTROLS INDICATE CLOCKWISE ROTATION (CONTROL VIEWED FROM SHAFT END)

CITI-FONE MODELS
CD-5/6, CD-5/12

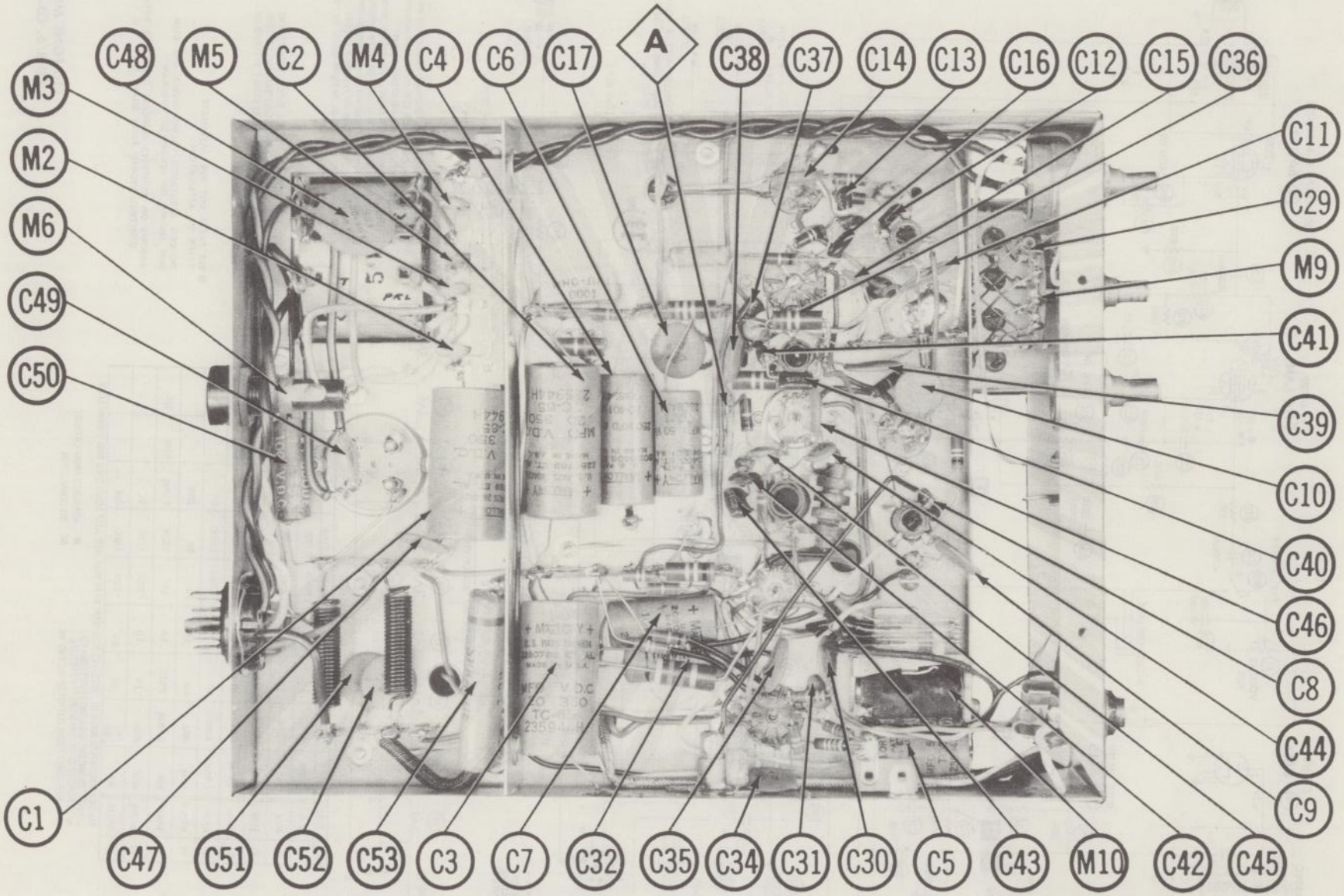

CHASSIS BOTTOM VIEW-CAPACITOR & MISC. IDENT.

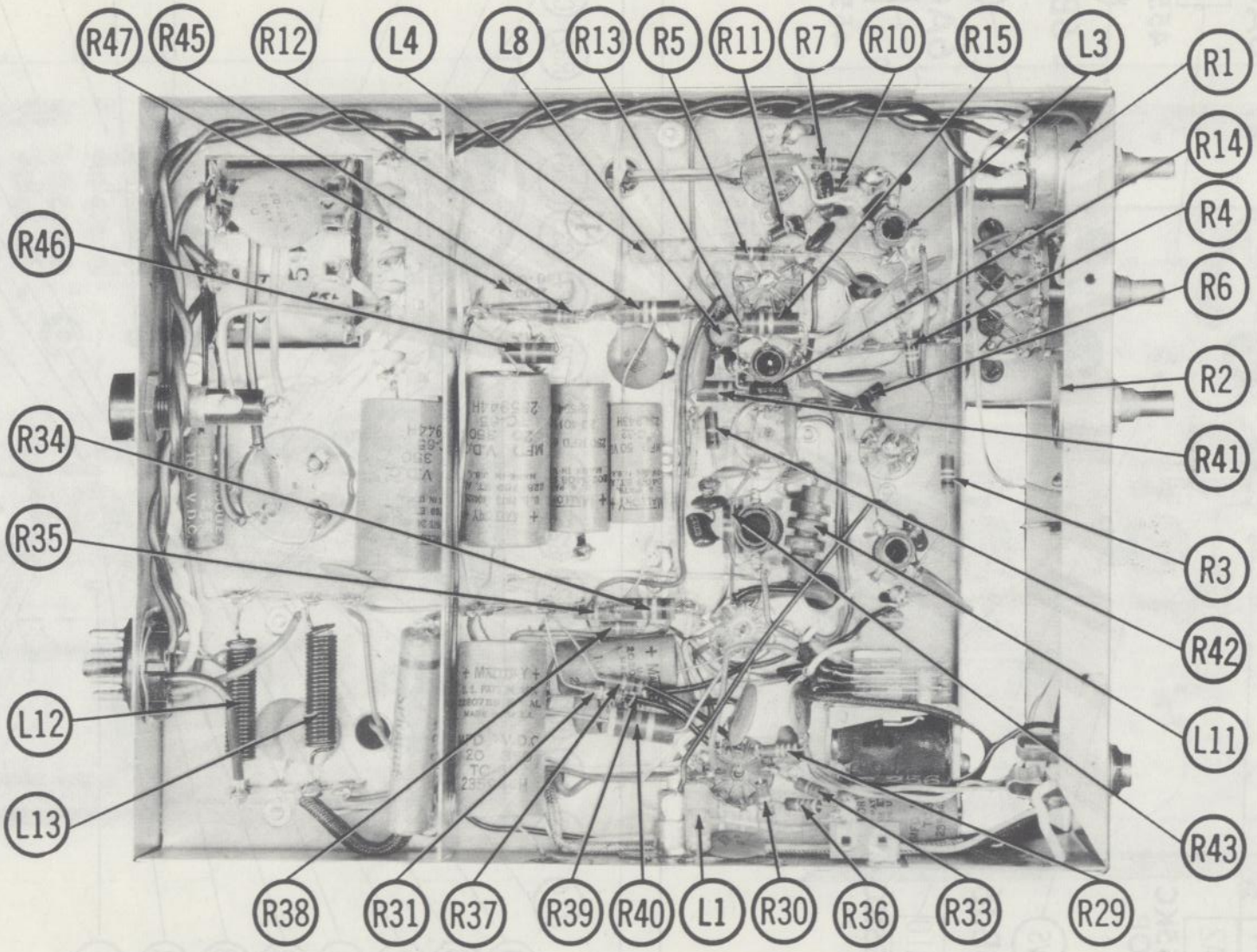

CHASSIS BOTTOM VIEW-RESISTOR & INDUCTOR IDENT.

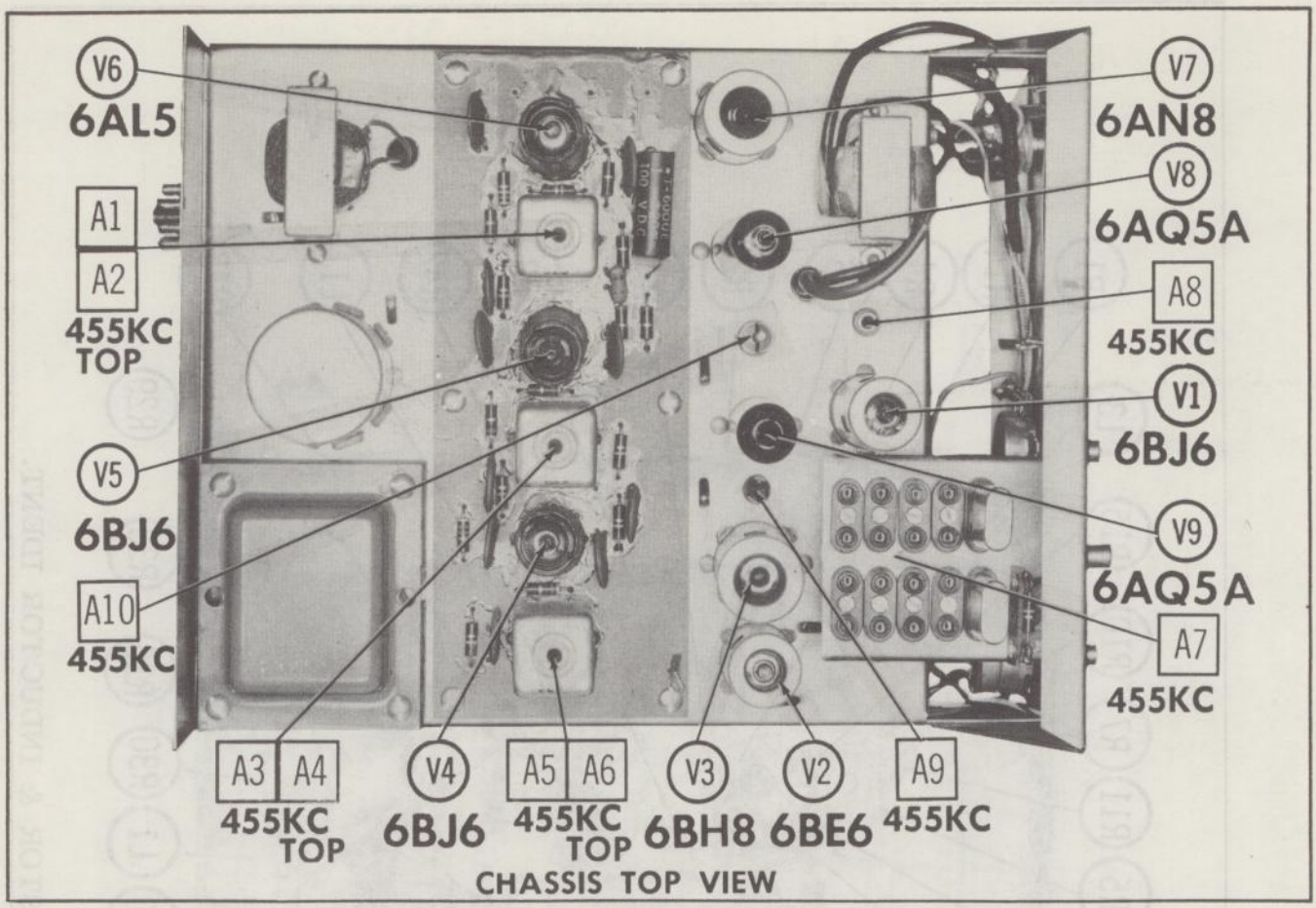

CHASSIS TOP VIEW

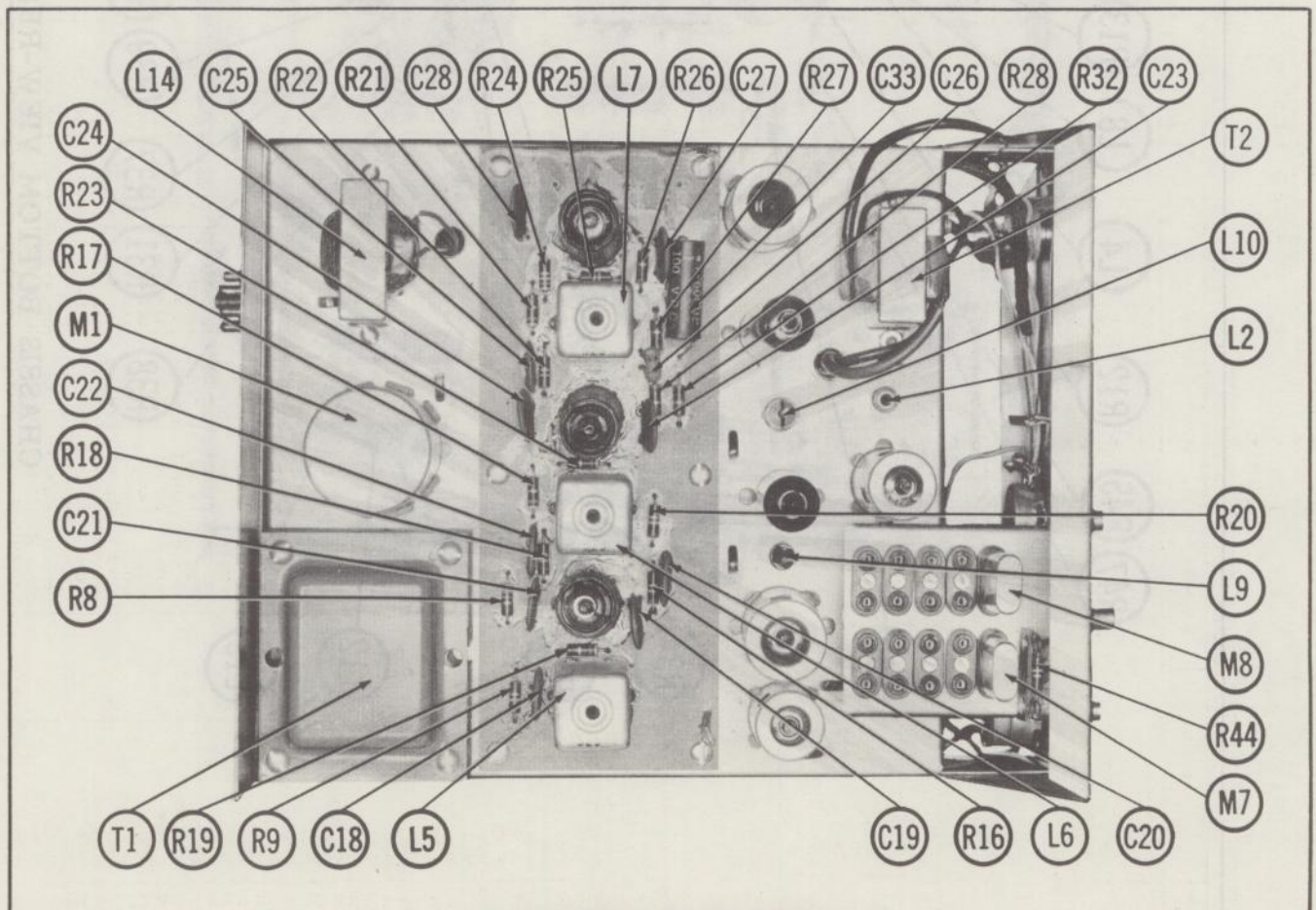

CHASSIS TOP VIEW

PARTS LIST AND DESCRIPTIONS

TUBES

ITEM No.	USE	TYPE	ITEM No.	USE	TYPE
	• GENERAL ELECTRIC •			RAYTHEON • SYLVANIA •	
V1	RF Amplifier	6BJ6	V6	Det.-AVC-Noise Limiter	6AL5
V2	Mixer	6BE6	V7	AF Amp.-Squelch Control	6AN8
V3	Rec. Osc.-Trans. Osc.	6BH8	V8	Audio Output & Modulator	6AQ5A
V4	1st IF Amplifier	6BJ6	V9	Final Amplifier	6AQ5A *
V5	2nd IF Amplifier	6BJ6			

* Manufacturer Recommends Replacing with Original Brand Only (Tung Sol)

ELECTROLYTIC CAPACITORS

ITEM No.	RATING CAP.	RATING VOLT.	REPLACEMENT DATA CITI-FONE PART No.	AEROVOX PART No.	CORNELL-DUBILIER PART No.	MALLORY PART No.	PYRAMID PART No.	SPRAGUE PART No.	NOTES
C1	20	350		PRS1735	BR2035	TC65	TD-20-350	TVA-1608	
C2	20	350		PRS1735	BR2035	TC65	TD-20-350	TVA-1608	
C3	20	350		PRS1735	BR2035	TC65	TD-20-350	TVA-1608	
C4	250	6		PRS1110	BBR250-6	TC50025	TD-250-6	TVA-1102	
C5	10	50		PRS1320	BBR10-50	TC32	TD-10-50	TVA-1304	
C6	10	50		PRS1320	BBR10-50	TC32	TD-10-50	TVA-1304	
C7	10	50		PRS1320	BBR10-50	TC32	TD-10-50	TVA-1304	

FIXED CAPACITORS

Capacity values given in the rating column are in mfd. for Paper Capacitors, and in mmfd. for Mica and Ceramic Capacitors.

ITEM No.	RATING	REMARKS	REPLACEMENT DATA AEROVOX PART No.	CENTRALAB PART No.	CORNELL-DUBILIER PART No.	ELMENCO PART No.	MALLORY PART No.	SPRAGUE PART No.
C8	75 2%			TCZ-75		CM-15E-750G	MCE230	
C9	10000		BPD-01	DD-103	BYA10S1	CCD-103	B-110	5HK-S10
C10A	5000		BPD-2X005	DD3-502	BYD6DD5	CCD-502	B2X250	5HK-2D50
B	5000					CCD-502		
C11	10000		BPD-01	DD-103	BYA10S1	CCD-103	B-110	5HK-S10
C12	75 2%			TCZ-75		CM-15E-750G	MCE230	
C13	5 10%		1469-000005	TCZ-4R7	22R5V5	CM-19B-050K	MCB205	MS-55
C14A	5000		BPD-2X005	DD3-502	BYD6DD5	CCD-502	B2X250	5HK-2D50
B	5000					CCD-502		
C15	2000		BPD-002	DD-202	BYA10D2	CCD-220	B-220	5HK-D20
C16	5 10%		1469-000005	TCZ-4R7	22R5V5	CM-19B-050K	MCB205	MS-55
C17	10000		BPD-01	DD-103	BYA10S1	CCD-103	B-110	5HK-S10
C18	10000		BPD-01	DD-103	BYA10S1	CCD-103	B-110	5HK-S10
C19	10000		BPD-01	DD-103	BYA10S1	CCD-103	B-110	5HK-S10
C20	10000		BPD-01	DD-103	BYA10S1	CCD-103	B-110	5HK-S10
C21	10000		BPD-01	DD-103	BYA10S1	CCD-103	B-110	5HK-S10
C22	10000		BPD-01	DD-103	BYA10S1	CCD-103	B-110	5HK-S10
C23	10000		BPD-01	DD-103	BYA10S1	CCD-103	B-110	5HK-S10
C24	10000		BPD-01	DD-103	BYA10S1	CCD-103	B-110	5HK-S10
C25	10000		BPD-01	DD-103	BYA10S1	CCD-103	B-110	5HK-S10
C26	250		SI 250	D6-251	L10T25	CCD-251	GP325	10TS-T25
C27	10000		BPD-01	DD-103	BYA10S1	CCD-103	B-110	5HK-S10
C28	10000		BPD-01	DD-103	BYA10S1	CCD-103	B-110	5HK-S10
C29	500		SI 500	D6-501	BYA10T5	CCD-501	B-350	10TS-T50
C30	4700		BPD-0047	DD-472	BYA10D47M	CCD-472	B-247	5HK-D47
C31	250		SI 250	D6-251	L10T25	CCD-251	GP325	10TS-T25
C32	.03 400V		P488N-03	DD-303	CUB6S3	4DP-2-303	GEM-413	4TM-S30
C33	.1 100V		P288N-1	DF-104	CUB2P1	2DP-3-104	GEM-201	2TM-P10
C34	10000		BPD-01	DD-103	BYA10S1	CCD-103	B-110	5HK-S10
C35	10000		BPD-01	DD-103	BYA10S1	CCD-103	B-110	5HK-S10
C36	2000		BPD-002	DD-202	BYA10D2	CCD-202	B-220	5HK-D20
C37	5 10%		1469-000005	TCZ-4R7	22R5V5	CM-19B-050K	MCB205	MS-55
C38	10000		BPD-01	DD-103	BYA10S1	CCD-103	B-110	5HK-S10
C39	10000		BPD-01	DD-103	BYA10S1	CCD-103	B-110	5HK-S10
C40	33 5%		1469-000033	TCZ-33	22R5Q33	CM-19B-330J	CNO-433	MS-433
C41	15 5%		1469-000015	TCZ-15	22R5Q15	CM-19B-150J	CNO-415	MS-415
C42	15 5%		1469-000015	TCZ-15	22R5Q15	CM-19B-150J	CNO-415	MS-415

FIXED CAPACITORS (cont)

ITEM No.	RATING	REMARKS	REPLACEMENT DATA AEROVOX PART No.	CENTRALAB PART No.	CORNELL-DUBILIER PART No.	ELMENCO PART No.	MALLORY PART No.	SPRAGUE PART No.
C43	200 2%		1469-0002			CM-15E-201G	MCE237	
C44	1000 1600V		DAC-2	DD30-102	HVB20D1	3CCD-102	2HV-210	BL-D10
C45	1000 1600V		DAC-2	DD30-102	HVB20D1	3CCD-102	2HV-210	BL-D10
C46	10000		BPD-01	DD-103	BYA10S1	CCD-103	B-110	5HK-S10
C47	10000		BPD-01	DD-103	BYA10S1	CCD-103	B-110	5HK-S10
C48	15000 1600V			DD16-153	HVE16S15	16DP-4-153		MB-S15
C49A	5000		BPD-2X005	DD3-502	BYD6DD5	CCD-502	B2X250	5HK-2D50
B	5000					CCD-502		
C50	.1 100V 5%		V84C2P1-5%		PM2P1	1DP-2-104		5BF-P10
C51	10000		BPD-01	DD-103	BYA10S1	CCD-103	B-110	5HK-S10
C52	10000		BPD-01	DD-103	BYA10S1	CCD-103	B-110	5HK-S10
C53	.5 120V		P282Z-5		CUB2P5	2DP-5-504	GEM-205	2TM-P50

CONTROLS

ITEM No.	RATING RESISTANCE	RATING WATTS	REPLACEMENT DATA CITI-FONE PART No.	CENTRALAB PART No.	CLAROSTAT PART No.	CTS-IRC PART No.	MALLORY PART No.	INSTALLATION NOTES
R1A	500K	½	475A	B-60-S	A47-500K-Z	Q13-133	U48	Volume
B	Shaft			Not Req.	RS-2	Not Req.	Not Req.	
C	Switch			Not Req.	SWE-12	76-1	US-26	Power Off-On
R2A	5000Ω	½		B-10	A47-5000-S	Q11-114	U14	Squelch
B	Shaft			Not Req.	RS-2	Not Req.	Not Req.	

RESISTORS

All wattages 1/2 watt, or less, unless otherwise listed.

ITEM No.	RATING	REPLACEMENT DATA IRC PART No.	WORKMAN TV PART No.	REMARKS	ITEM No.	RATING	REPLACEMENT DATA IRC PART No.	WORKMAN TV PART No.	REMARKS
R3	100K				R26	1.2meg			
R4	100K				R27	1meg			
R5	1000Ω				R28	1meg			
R6	150Ω				R29	33K			
R7	22K				R30	470K			
R8	47K				R31	220K			(470K) *
R9	220K				R32	1meg			
R10	1000Ω				R33	1200Ω			
R11	100K				R34	100K 1W			
R12	27K 1W				R35	15K			
R13	22K				R36	47K			
R14	10K				R37	1meg			
R15	22K 1W				R38	2200Ω			
R16	100K				R39	470K			
R17	4700Ω				R40	470Ω 2W			
R18	150K				R41	15K 1W			
R19	470Ω				R42	1000Ω			
R20	100K				R43	68K 1W			
R21	4700Ω				R44	100K			
R22	150K				R45	680Ω			
R23	470Ω				R46	150Ω 1W			
R24	470K				R47	1000Ω 5W	PW5-1000	5W-SQ-1000	
R25	220K								

* Alternate Value.

PARTS LIST AND DESCRIPTIONS (Continued)

COILS (RF-IF)

ITEM No.	USE	REPLACEMENT DATA				NOTES
		CITI-FONE PART No.	Merit PART No.	Miller PART No.	Stancor PART No.	
L1	RF Choke(7.5uh)	①	BC-565	4611	RTC-8521	① IRC Part #CLA
L2	Ant.	603				
L3	RF	602				
L4	RF Choke(7.5uh)	①	BC-565	4611	RTC-8521	
L5	1st IF	525				
L6	2nd IF	525				
L7	3rd IF	525				
L8	RF Choke(7.5uh)	①	BC-565	4611	RTC-8521	
L9	Trans. Osc. Plate	604	TV-118	6171-A	RTC-8609	
L10	Transmitter Output	G-15	TV-118	6171-A	RTC-8609	
L11	RF Choke(2.5MH)		BC-549	4537	RTC-9166	
L12	Hash Choke (10uh)			5220	RTC-9182	
L13	Fil. Choke (10uh)			5220	RTC-9182	

FILTER CHOKE

ITEM No.	RATINGS			REPLACEMENT DATA					NOTES
	CURRENT (Measured)	DC RES.	INDUCTANCE (0 CURRENT 1000 ∿)	CITI-FONE PART No.	Merit PART No.	Stancor PART No.	Thordarson PART No.	Triad PART No.	
L14	.080A	25Ω	.5 HY	M88-628					

TRANSFORMER (POWER)

ITEM No.	RATING			REPLACEMENT DATA					NOTES
	INPUT	SEC. 1	SEC. 2	CITI-FONE PART No.	Merit PART No.	Stancor PART No.	Thordarson PART No.	Triad PART No.	
T1	117VAC ⓐ .46A or 12.6VDC ⓐ 1.5A	210V ⓐ .15A DC	18V Tap ⓐ 12.6V, 6V *	592 ①					① For 12 VDC Operation. Part #591 used for 6 VDC operation. * Secondary 2 not used in DC operation.

TRANSFORMER (AUDIO OUTPUT)

ITEM No.	IMPEDANCE		REPLACEMENT DATA					NOTES
	PRI.	SEC.	CITI-FONE PART No.	Merit PART No.	Stancor PART No.	Thordarson PART No.	Triad PART No.	
T2	6700Ω	3-4Ω	121-A6	A-3026	A-3850①	24S05①	S-49X①	① Drill New Mounting Hole (s).

SPEAKER

ITEM No.	TYPE			REPLACEMENT DATA		NOTES
	SIZE	FIELD	V. C. IMP.	CITI-FONE PART No.	QUAM PART No.	
SP1	3½"	PM	3-4Ω	5531	3A07	

VIBRATOR

ITEM No.	TYPE	INPUT VOLTS	FRE-QUENCY	REPLACEMENT DATA				NOTES
				CITI-FONE PART No.	CORNELL-DUBILIER PART No.	MALLORY PART No.	RADIART PART No.	
M1	Interrupter	12V	115∿	G-1601	6301	G-1601	6301	
	Interrupter	6V	115∿	1601	5300	1601	5300	

POWER RECTIFIERS

ITEM No.	RATING	REPLACEMENT DATA				NOTES
	CURRENT (Measured)	CITI-FONE PART No.	RCA PART No.	SARKES TARZIAN PART No.	SYLVANIA PART No.	
M2	.080A		1N1763 *	2F4 *	SR200 *	* Silicon
M3	.080A		1N1763 *	2F4 *	SR200 *	
M4	.080A		1N1763 *	2F4 *	SR200 *	
M5	.080A		1N1763 *	2F4 *	SR200 *	

FUSES

ITEM No.	TYPE	RATING	REPLACEMENT DATA					
			CITI-FONE PART No.		LITTELFUSE PART No.		BUSS PART No.	
			FUSE	HOLDER	FUSE	HOLDER	FUSE	HOLDER
M6	3AG	15/100A 250V S/B			313.150 (.15A 250V S/B)	342001	MDL 15/100	HKP

MISCELLANEOUS

ITEM No.	PART NAME	CITI-FONE PART No.	NOTES
M7	Crystal		Receive
M8	Crystal		Transmit
M9	Switch		Channel Selector (Rotary Wafer Type)
M10	Relay		Transmit-Receive
M11	Microphone Assy.		Includes Push-To-Talk Switch

WIRING DATA

General-use Unshielded Hook-up Wire ..... Use BELDEN No. 8530 (Solid) Available in Ten Colors
8524 (Stranded) Available in Ten Colors

Power Cord ..... Use BELDEN No. 1765-B (6 Ft. Length)
1725-K (7½ Ft. Length)

PHOTOFACT® Folder

GLOBE
MODEL CB-100

GLOBE
MODEL CB-100

TRADE NAME	Globe Model CB-100
MANUFACTURER	Globe Electronics, A Div. of Textron Electronics, Inc., 22-30 S. 34th St., Council Bluffs, Iowa
TYPE SET	AC (or) Battery Operated 10 Tube Crystal Controlled Citizens Band Transmitter-Receiver
POWER SUPPLY	110 - 120 Volts AC, 60 Cycles (or) 12 Volt Storage Battery (Versions for 6 volt Storage Battery Operation are also available.
RATING	72 Watts, .8 Amp. @117 Volts AC (or) 5 Amp. @12.6 Volts DC (or) 10 Amp. @6.3 Volts DC
TUNING RANGE	Any 3 of Citizens Band Channels 1 thru 22

NOTICE

ONLY THOSE PERSONS PROPERLY LICENSED BY FCC ARE PERMITTED TO MAKE CRYSTAL SUBSTITUTION OR EFFECT REPAIRS ON THE TRANSMITTER PORTION OF THIS UNIT.

HOWARD W. SAMS & CO., INC. Indianapolis 6, Indiana

KZ406

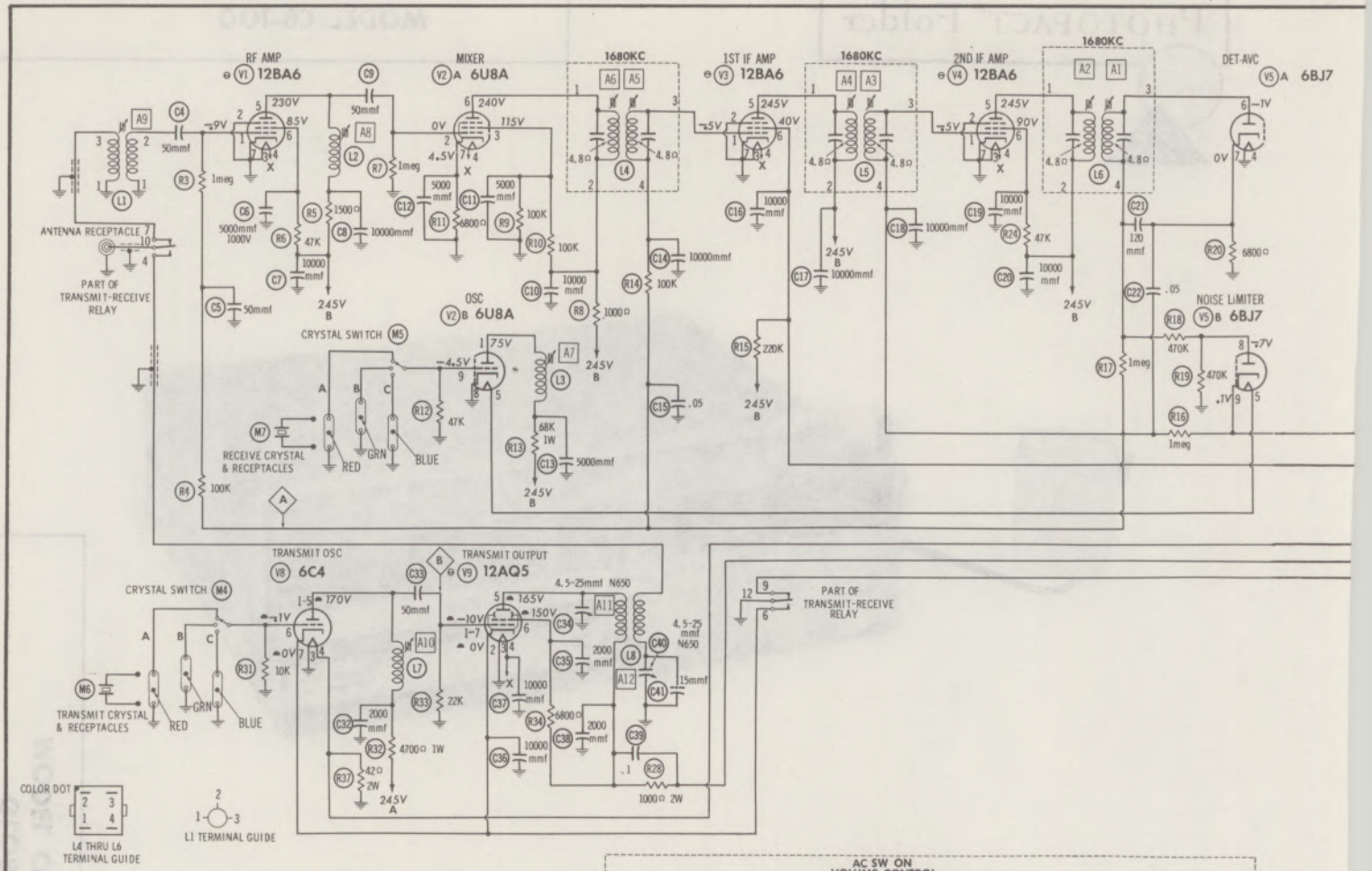

RESISTANCE READINGS

ITEM	TUBE	Pin 1	Pin 2	Pin 3	Pin 4	Pin 5	Pin 6	Pin 7	Pin 8	Pin 9
V1	12BA6	3.1meg	0Ω	0Ω	†1700Ω	†47K	0Ω			
V2	6U8A	†68K	1meg	†90K	.1Ω	1Ω	†1200Ω	6800Ω	0Ω	47K
V3	12BA6	2.1meg	0Ω	.1Ω	0Ω	†250Ω	†220K	0Ω		
V4	12BA6	2meg	0Ω	.1Ω	0Ω	†250Ω	†47K	0Ω		
V5	6BJ7	†1.8meg	†1.2meg	0Ω	0Ω	1Ω	1meg	6800Ω	470K	3meg
V6	12AU7A	†500K	500K	2200Ω	.1Ω	.1Ω	†520K	450K	2200Ω	1Ω
V7	12AQ5	250K	220Ω	.1Ω	0Ω	†880Ω	†47K	NC		
V8	6C4	†5000Ω	NC	0Ω	1Ω	NC	10K	▬0Ω		
V9	12AQ5	22K	▬0Ω	0Ω	.1Ω	†1900Ω	†8700Ω	22K		
V10	12BW4	85Ω	NC	NC	.1Ω	0Ω	NC	80Ω	NC	¶

¶ THIS READING WILL VARY DEPENDING UPON THE CONDITION OF THE ELECTROLYTIC IN THE CIRCUIT.
ALL MEASUREMENTS MADE IN "RECEIVE" POSITION UNLESS OTHERWISE DESIGNATED.
† MEASURED FROM PIN 9 OF V10.
▬ MEASURED IN "TRANSMIT" POSITION.
NC NO CONNECTION

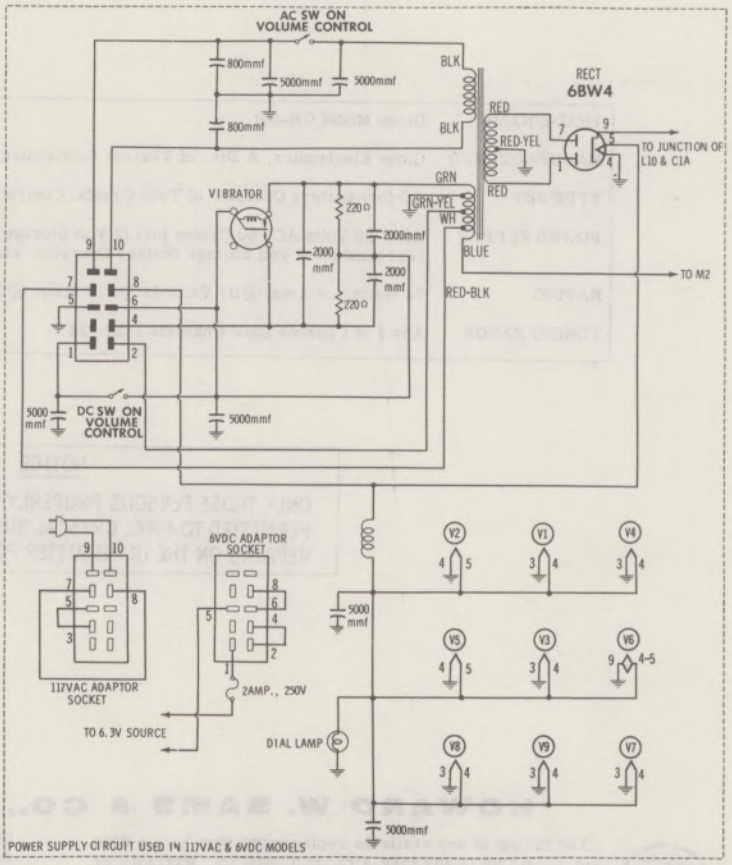

POWER SUPPLY CIRCUIT USED IN 117VAC & 6VDC MODELS

A PHOTOFACT STANDARD NOTATION SCHEMATIC

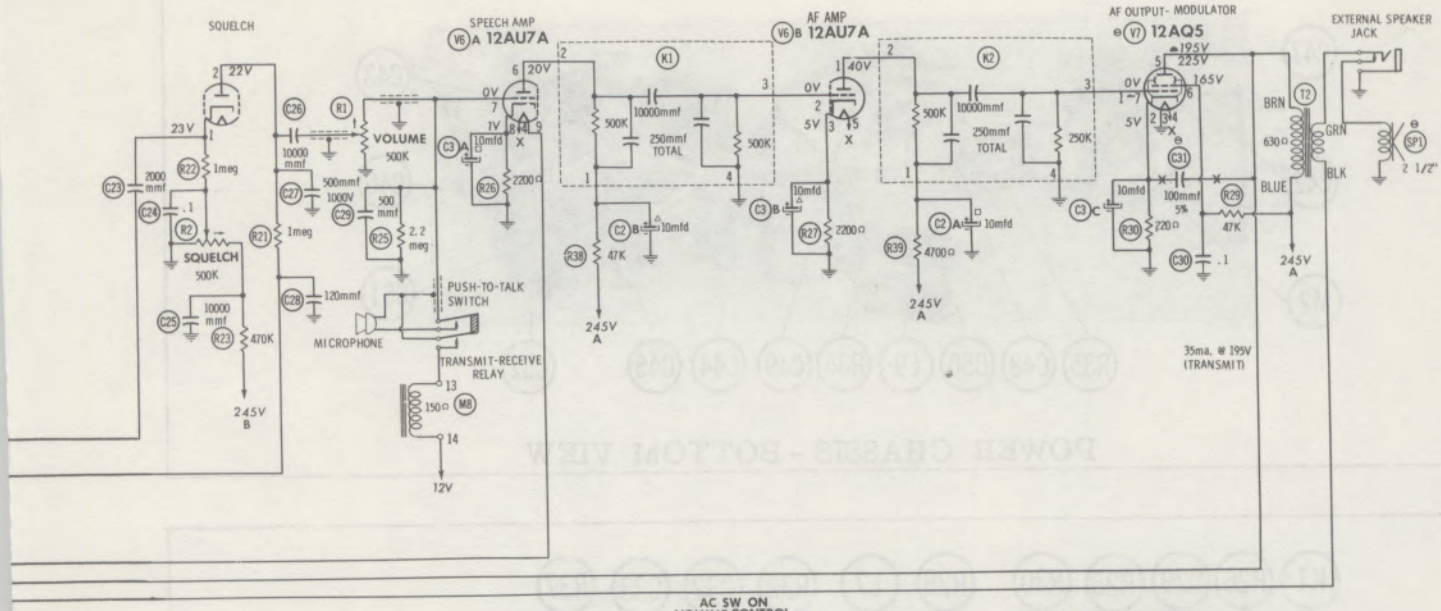

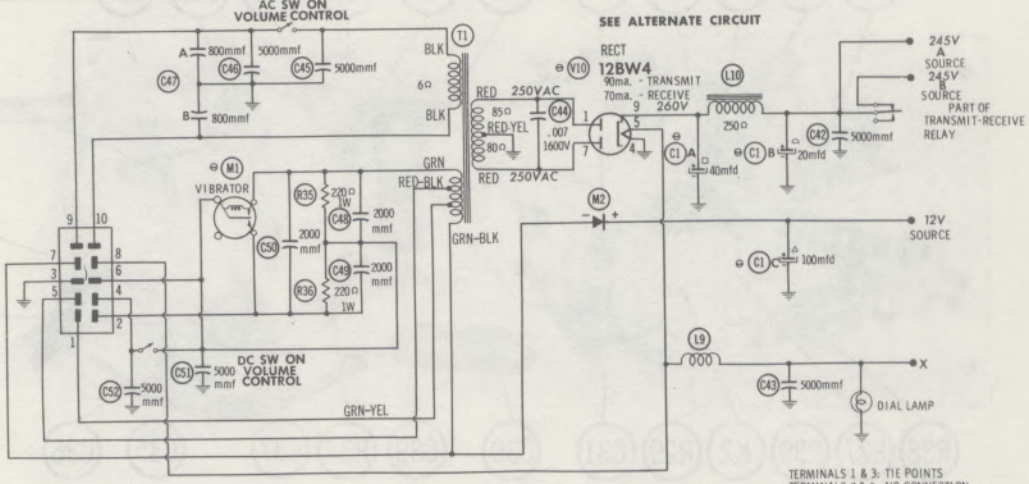

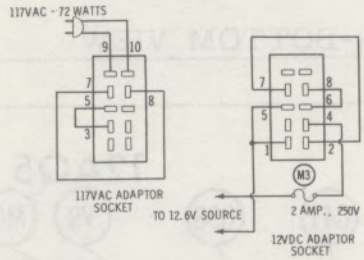

NUMBERS ASSIGNED TO COILS, SWITCHES, PLUGS, SOCKETS, AND TRANSFORMERS ARE TO FACILITATE CIRCUIT TRACING OR COMPONENT REPLACEMENT AND MAY NOT NECESSARILY BE FOUND ON THE UNIT.

TERMINALS 1 & 3: TIE POINTS
TERMINALS 2 & 5: NO CONNECTION

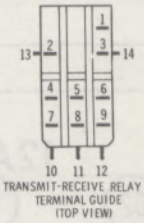

1. DC voltage measurements taken with vacuum tube voltmeter; AC voltages measured with 1000 ohm per volt voltmeter.
2. Socket connections are shown as bottom views.
3. Measured values are from socket pin to common ground.
4. Line voltage maintained at 117 volts for voltage readings.
5. Nominal tolerance on component values makes possible a variation of ±15% in voltage and resistance readings.
6. Volume control at maximum, no signal applied for voltage measurements.

⊖ SEE PARTS LIST FOR ALTERNATE VALUE OR APPLICATION

DC COIL RESISTANCE VALUES UNDER ONE OHM NOT SHOWN ON SCHEMATIC DIAGRAM

ARROWS ON CONTROLS INDICATE CLOCKWISE ROTATION (CONTROL VIEWED FROM SHAFT END)

GLOBE MODEL CB-100

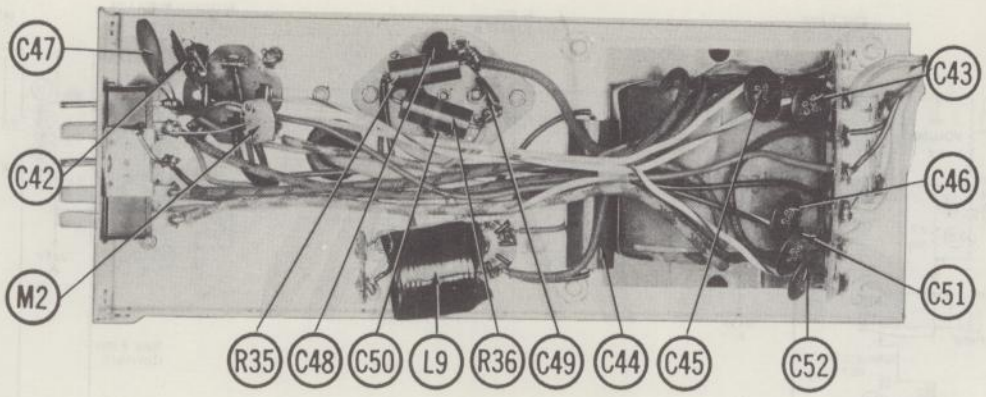

POWER CHASSIS - BOTTOM VIEW

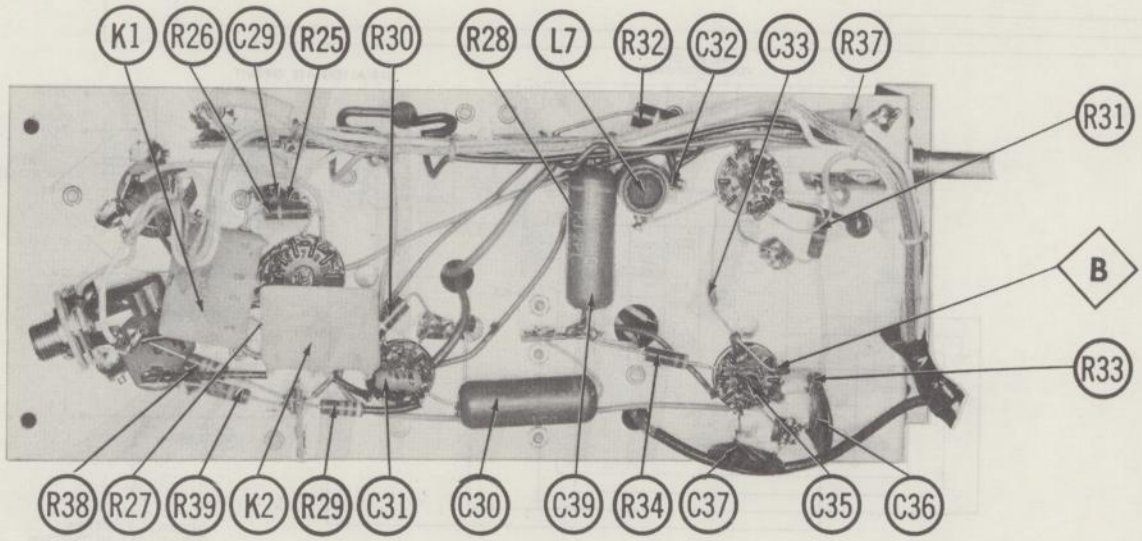

TRANSMITTER CHASSIS-BOTTOM VIEW

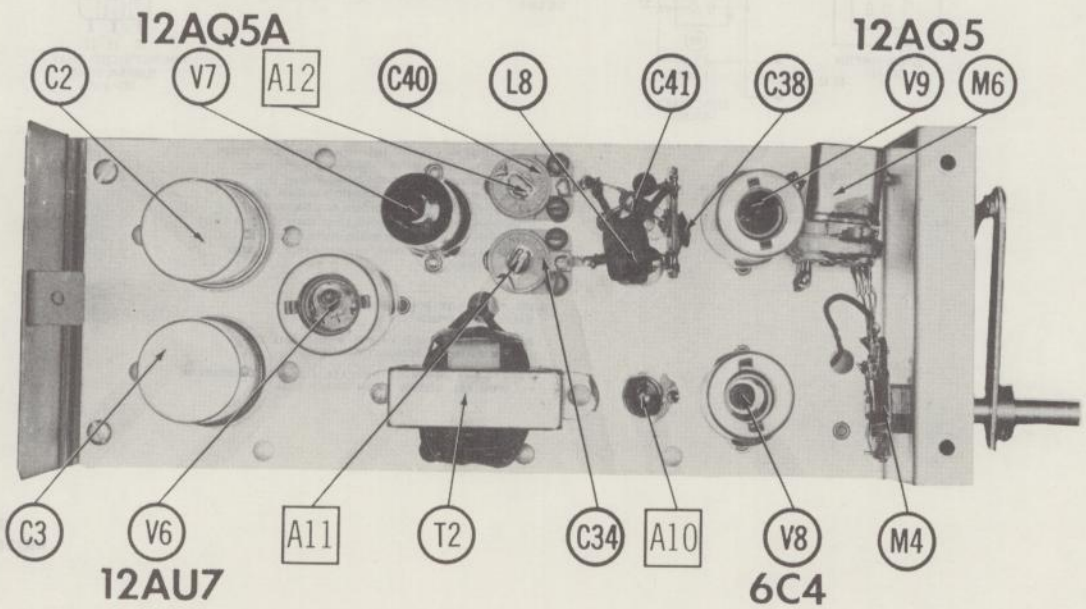

TRANSMITTER CHASSIS-TOP VIEW

ALIGNMENT INSTRUCTIONS

ALIGNMENT INSTRUCTIONS—READ CAREFULLY BEFORE ATTEMPTING ALIGNMENT

Suggested Alignment Tools:
- A1 thru A6.....GENERAL CEMENT #8282, 8606, 8606-L, 9295, 9440
  WALSCO #2526, 2543, 2544, 2545
- A7, A8, A9, A10.....GENERAL CEMENT #8721, 8722
  WALSCO #2519
- A11, A12.....GENERAL CEMENT #5000, 5003, 5066, 8276, 8290, 9087, 9089
  WALSCO #2512, 2525, 2528

RECEIVER ALIGNMENT

Set Squelch Control (R2) to maximum counterclockwise.

	SIGNAL GENERATOR COUPLING	SIGNAL GENERATOR FREQUENCY	RADIO DIAL SETTING	CONNECT VTVM	ADJUST	REMARKS
1.	High side thru .001mfd to pin 2 (grid) of V2 (mixer). Low side to chassis.	1680KC (400~ Mod.)		DC probe to point Ⓐ. Common to chassis.	A1, A2, A3, A4, A5, A6, A7	Adjust for maximum deflection. Adjust A7 from maximum inductance toward minimum inductance for abrupt meter rise.
	Disconnect VTVM and tune oscillator signal on an accurately calibrated receiver. (Signal will be 1680KC above the Channel Frequency in use.) If more than one channel is to be used, it may be necessary to "average" the oscillator adjustment (A7) to keep crystals within operating frequency limits (± 1000~).					
2.	High side to antenna jack, common to chassis.	Channel Desired		DC probe to point Ⓐ. Common to chassis.	A8, A9	Adjust for maximum deflection. If signal injected is excessive, disconnect generator and couple loosely to jack.

TRANSMITTER ALIGNMENT

Connect DC probe of VTVM to point Ⓐ, common to chassis. Adjust A10 for maximum deflection.

Remove VTVM and connect a 50Ω dummy load to antenna jack. Adjust A11 and A12 for maximum output. After antenna is connected, retouch A11 and A12 for maximum output.

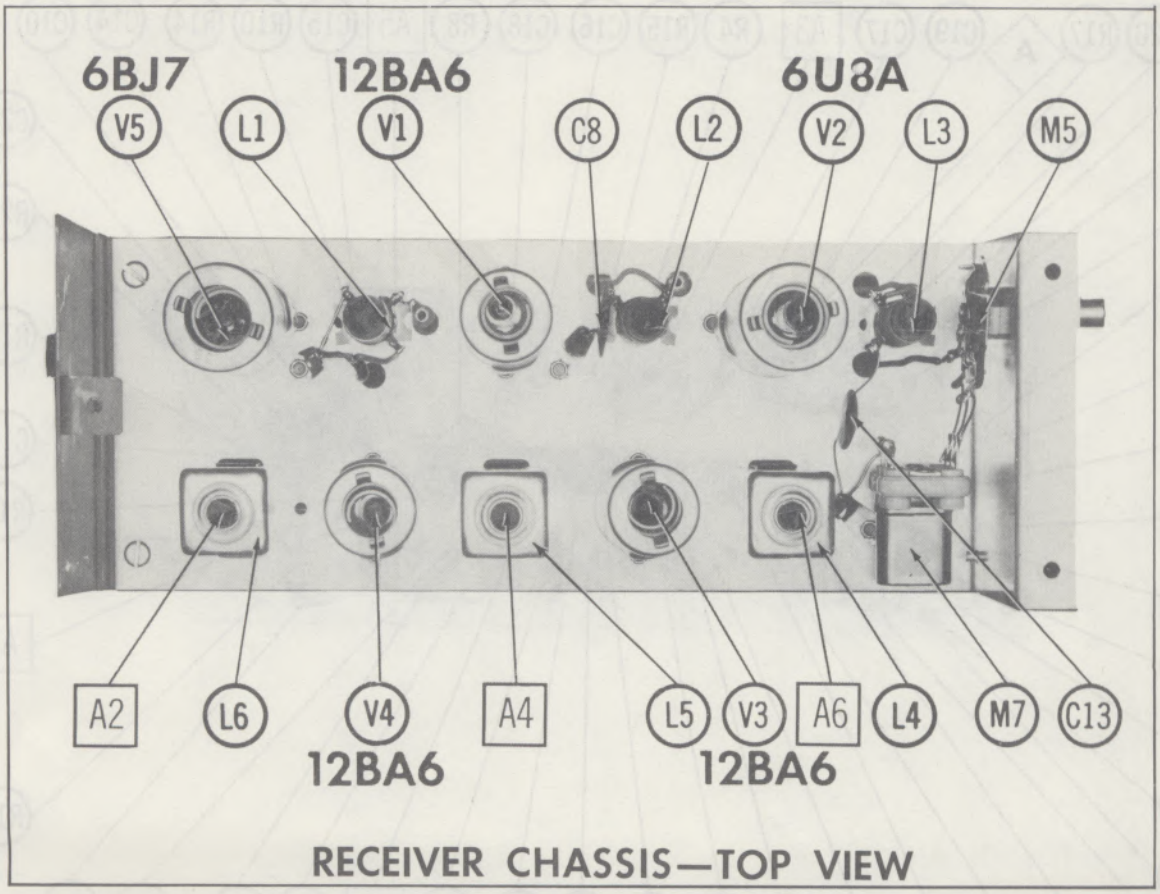

RECEIVER CHASSIS—TOP VIEW

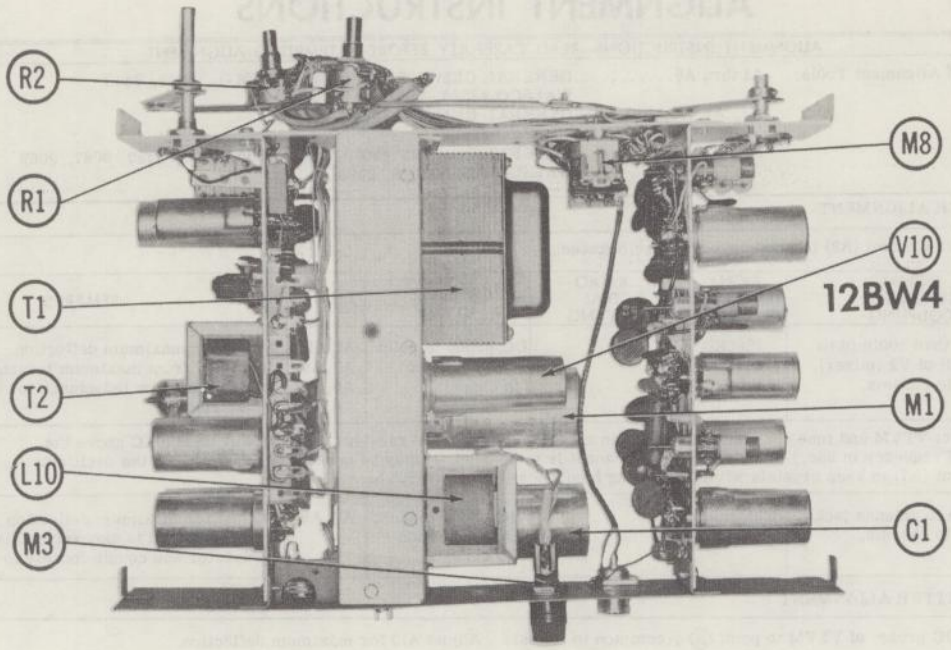

COMPLETE ASSEMBLY-TOP VIEW

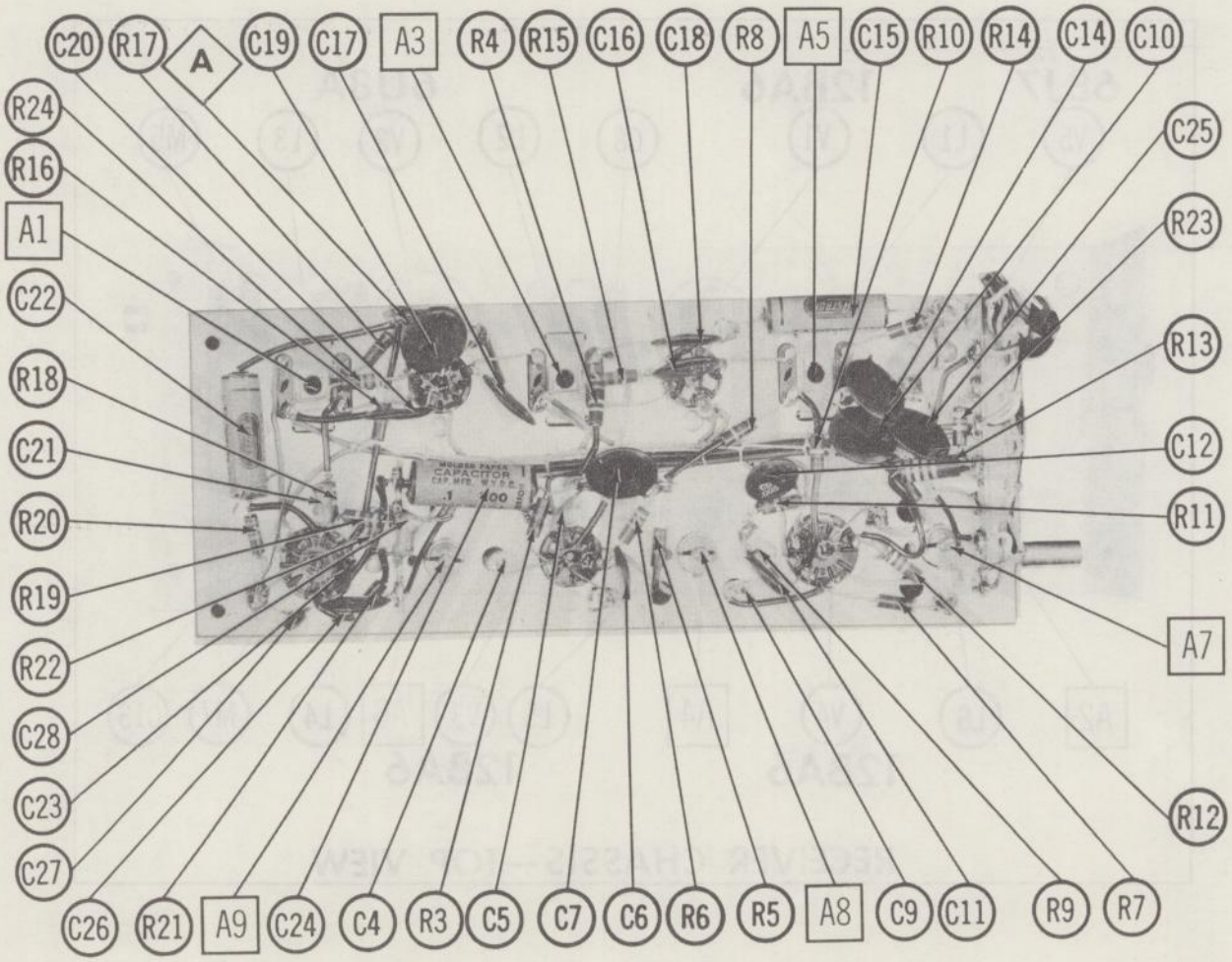

RECEIVER CHASSIS-TOP VIEW

PARTS LIST AND DESCRIPTIONS

TUBES

ITEM No.	USE	TYPE (GENERAL ELECTRIC / RAYTHEON / SYLVANIA)
V1	RF Amplifier	12BA6 *
V2	Mixer-Osc.	6U8A
V3	1st IF Amplifier	12BA6 *
V4	2nd IF Amplifier	12BA6 *
V5	Det.-AVC-Noise Lim-Squelch	6BJ7
V6	AF Amp.-Sqeech Amp.	12AU7A
V7	AF Output-Modulator	12AQ5 *
V8	Trans. Osc.	6C4
V9	Trans. Output	12AQ5 *
V10	Rectifier	12BW4 *

* Equivalent 6V Filament Tubes used in 6 Volt Versions.

ELECTROLYTIC CAPACITORS

ITEM No.	RATING CAP.	RATING VOLT.	GLOBE PART No.	AEROVOX PART No.	CORNELL-DUBILIER PART No.	MALLORY PART No.	PYRAMID PART No.	SPRAGUE PART No.	NOTES
C1A	■40	450	1106-023	AFH3-139-50	C1090	FP367	TMT-3685	TVL-3755	Note 1
B	▲20	450							Note 1
C	▲100	25							Note 1
C2A	■10	350	1106-022	AFH2-47	B0370	FP231	TMD-2610	TVL-2750	
B	▲10	350							
C3A	■10	25	1106-021	AFH3-22	C0240	FP330.5	TMT-3292	TVL-3580	
B	▲10	25							
C	10	25							

.Note 1. In some versions C1A and C1B may be one unit (Part #1106-020) and C1C may be a separate unit (Part #1106-019).

FIXED CAPACITORS

Capacity values given in the rating column are in mfd. for Paper Capacitors, and in mmfd. for Mica and Ceramic Capacitors.

ITEM No.	RATING	REMARKS	AEROVOX PART No.	CENTRALAB PART No.	CORNELL-DUBILIER PART No.	ELMENCO PART No.	MALLORY PART No.	SPRAGUE PART No.
C4	50		DI-50	DD-500	Li0Q5	CCD-500	GP450	10TS-Q50
C5	50		DI-50	DD-500	Li0Q5	CCD-500	GP450	10TS-Q50
C6	5000 1000V		BPD-005	DD-502	BYA10D5	CCD-502	B-250	5HK-D50
C7	10000		BPD-01	DD-103	BYA10S1	CCD-103	B-110	5HK-S10
C8	10000		BPD-01	DD-103	BYA10S1	CCD-103	B-110	5HK-S10
C9	50		SI 50	D6-500	Li0Q5	CCD-500	GP450	10TS-Q50
C10	10000		BPD-01	DD-103	BYA10S1	CCD-103	B-110	5HK-S10
C11	5000		BPD-005	DD-502	BYA10D5	CCD-502	B-250	5HK-D50
C12	5000		BPD-005	DD-502	BYA10D5	CCD-502	B-250	5HK-D50
C13	5000		BPD-005	DD-502	BYA10D5	CCD-502	B-250	5HK-D50
C14	10000		BPD-01	DD-103	BYA10S1	CCD-103	B-110	5HK-S10
C15	.05 200V		P288N-05	DD-503	CUB2S5	4DP-3-503	GEM-415	2TM-S50
C16	10000		BPD-01	DD-103	BYA10S1	CCD-103	B-110	5HK-S10
C17	10000		BPD-01	DD-103	BYA10S1	CCD-103	B-110	5HK-S10
C18	10000		BPD-01	DD-103	BYA10S1	CCD-103	B-110	5HK-S10
C19	10000		BPD-01	DD-103	BYA10S1	CCD-103	B-110	5HK-S10
C20	10000		BPD-01	DD-103	BYA10S1	CCD-103	B-110	5HK-S10
C21	120		SI 120	D6-121	Li0T12	CCD-121	GP312	10TS-T12
C22	.05 200V		P288N-05	DD-503	CUB2S5	4DP-3-503	GEM-415	2TM-S50
C23	2000		BPD-002	DD-202	BYA10D2	CCD-202	B-220	5HK-D20
C24	.1 200V		P288N-1	DF-104	CUB2P1	2DP-3-104	GEM-201	2TM-P10
C25	10000		BPD-01	DD-103	BYA10S1	CCD-103	B-110	5HK-S10
C26	10000		BPD-01	DD-103	BYA10S1	CCD-103	B-110	5HK-S10
C27	500 1000V		BPD-0005	DD-500	BYA10T5	CCD-501	B-350	10TS-T50
C28	120		SI 120	D6-121	Li0T12	CCD-121	GP312	10TS-T12
C29	500		BPD-0005	DD-500	BYA10T5	CCD-501	B-350	10TS-T50
C30	.1 200V		P288N-1	DF-104	CUB2P1	2DP-3-104	GEM-201	2TM-P10
C31	100 5%	Note 1		TCZ-100	22R5T1	CM-19B-101J	MCE235	MS-31
C32	2000		BPD-002	DD-202	BYA10D2	CCD-202	B-220	5HK-D20
C33	50		DI-50	DD-500	Li0Q50	CCD-500	GP450	10TS-Q50
C34	4.5-25 N650	#1111-001		822-CN				
C35	2000		BPD-002	DD-202	BYA10D2	CCD-202	B-220	5HK-D20
C36	10000		BPD-01	DD-103	BYA10S1	CCD-103	B-110	5HK-S10
C37	10000		BPD-01	DD-103	BYA10S1	CCD-103	B-110	5HK-S10
C38	2000		BPD-002	DD-202	BYA10D2	CCD-202	B-220	5HK-D20
C39	.1 200V		P288N-1	DF-104	CUB2P1	2DP-3-104	GEM-201	2TM-P10
C40	4.5-25 N650	#1111-001		822-CN				

FIXED CAPACITORS (cont)

ITEM No.	RATING	REMARKS	AEROVOX PART No.	CENTRALAB PART No.	CORNELL-DUBILIER PART No.	ELMENCO PART No.	MALLORY PART No.	SPRAGUE PART No.
C41	15		SI 15	D6-150	Li0Q15	CCD-150	GP415	10TS-Q15
C42	5000		BPD-005	DD-502	BYA10D5	CCD-502	B-250	5HK-D50
C43	5000		BPD-005	DD-502	BYA10D5	CCD-502	B-250	5HK-D50
C44	.007 1600V		P1684CM-007	DD16-702	CUB16D7	16DP-3-702	GEM-1627	MB-D7
C45	5000		BPD-005	DD-502	BYA10D5	CCD-502	B-250	5HK-D50
C46	5000		BPD-005	DD-502	BYA10D5	CCD-502	B-250	5HK-D50
C47A	800		BPD-0008	DD-801	BYA10T82	CCD-801	B-382	10TS-T80
B	800		BPD-0008	DD-801	BYA10T82	CCD-801	B-382	10TS-T80
C48	2000		BPD-002	DD-202	BYA10D2	CCD-202	B-220	5HK-D20
C49	2000		BPD-002	DD-202	BYA10D2	CCD-202	B-220	5HK-D20
C50	2000		BPD-002	DD-202	BYA10D2	CCD-202	B-220	5HK-D20
C51	5000		BPD-005	DD-502	BYA10D5	CCD-502	B-250	5HK-D50
C52	5000		BPD-005	DD-502	BYA10D5	CCD-502	B-250	5HK-D50

Note 1. Not used in some versions.
\# Globe Part Number.

CONTROLS

ITEM No.	RATING RESISTANCE	RATING WATTS	GLOBE PART No.	CENTRALAB PART No.	CLAROSTAT PART No.	CTS-IRC PART No.	MALLORY PART No.	INSTALLATION NOTES
R1A	500K	½	2300-015	B-60-S	A47-500K-Z	Q13-133	U48	Volume
B	Shaft			Not Req.	RS-2	Not Req.	Not Req.	
C	Switch			Not Req.	SWE-20	76-2	US-27	Power Off-On
R2	500K	½	2300-016					Squelch

RESISTORS

All wattages 1/2 watt, or less, unless otherwise listed.

ITEM No.	RATING	REPLACEMENT DATA IRC PART No.	WORKMAN TV PART No.	REMARKS
R3	1meg			
R4	100K			
R5	1500Ω			
R6	47K			
R7	1meg			
R8	1000Ω			
R9	100K			
R10	100K			
R11	6800Ω			
R12	47K			
R13	68K 1W			
R14	100K			
R15	220K			
R16	1meg			
R17	1meg			
R18	470K			
R19	470K			
R20	6800Ω			
R21	1meg			
R22	1meg			
R23	470K			
R24	47K			
R25	2.2meg			
R26	2200Ω			
R27	2200Ω			
R28	1000Ω 2W			
R29	47K			
R30	220Ω			
R31	10K			
R32	4700Ω 1W			
R33	22K			
R34	6800Ω			
R35	220Ω 1W			
R36	220Ω 1W			
R37	42Ω 2W			
R38	47K			
R39	4700Ω			

COMPONENT COMBINATIONS

ITEM No.	USE	DESCRIPTION	GLOBE PART No.	REPLACEMENT DATA	
K1	Audio Coupling	250mmf, 10000mmf, 500K, 500K	1109-005	Aerovox	PA-112-3
				Centralab	PC-80
				Sprague	T-1
K2	Audio Coupling	250mmf, 10000mmf, 250K, 500K	1109-001	Aerovox	PA-112-4
				Centralab	PC-81
				Sprague	T-2

PARTS LIST AND DESCRIPTIONS (Continued)

COILS (RF-IF)

ITEM No.	USE	REPLACEMENT DATA					NOTES
		GLOBE PART No.	Merit PART No.	Miller PART No.	Stancor PART No.	Workman TV PART No.	
L1	Ant.	1400-104	TV-116	6250	RTC-8568	T232A	
L2	RF	1400-105	TV-118	6171-A	RTC-8609	T216	
L3	Osc. Plate	1400-103	TV-118	6171-A	RTC-8609	T216	
L4	1st IF	1205-001					
L5	2nd IF	1205-001					
L6	3rd IF	1205-001					
L7	Osc. Plate	1400-106	TV-118	6171-A	RTC-8609	T216	
L8	Output Final	1400-107					
L9	Fil. Choke	1300-018	BC-537	5219	RTC-9181		

FILTER CHOKE

ITEM No.	RATINGS			REPLACEMENT DATA					NOTES
	CURRENT (Measured)	DC RES.	INDUCTANCE (0 CURRENT 1000 ∿)	GLOBE PART No.	Merit PART No.	Stancor PART No.	Thordarson PART No.	Triad PART No.	
L10	.090A	250Ω	5.4 HY	1300-017					

TRANSFORMER (POWER)

ITEM No.	RATING			REPLACEMENT DATA					NOTES
	PRI. 1	SEC. 1	SEC. 2	GLOBE PART No.	Merit PART No.	Stancor PART No.	Thordarson PART No.	Triad PART No.	
T1	117V @ .8A PRI. 2 12.6VCT @ 3A	500VCT @ .090A	12.6V @ 2A (AC Operation)	1200-018					

TRANSFORMER (AUDIO OUTPUT)

ITEM No.	IMPEDANCE		REPLACEMENT DATA					NOTES
	PRI.	SEC.	GLOBE PART No.	Merit PART No.	Stancor PART No.	Thordarson PART No.	Triad PART No.	
T2	17K	3-4Ω	1203-011					

SPEAKER

ITEM No.	TYPE			REPLACEMENT DATA		NOTES
	SIZE	FIELD	V. C. IMP.	GLOBE PART No.	QUAM PART No.	
SP1	2½"	PM	3-4Ω	4002-001A *	25A07	* Alternate Part #4002-001

VIBRATOR

ITEM No.	TYPE	INPUT VOLTS	FRE-QUENCY	REPLACEMENT DATA				NOTES
				GLOBE PART No.	CORNELL-DUBILIER PART No.	MALLORY PART No.	RADIART PART No.	
M1	Interrupter Interrupter	12 6	115∿ 115∿	4001-001	G8801 5301 *	G1601 1601	G8801 5301 *	12 Volt versions 6 Volt versions

* 6 Volt Versions.

POWER RECTIFIERS

ITEM No.	RATING	REPLACEMENT DATA				NOTES
	CURRENT (Measured)	GLOBE PART No.	RCA PART No.	SARKES TARZIAN PART No.	SYLVANIA PART No.	
M2		3700-014 *	1N1763 *	2F4 *	SR200 *	* Silicon

FUSES

ITEM No.	TYPE	RATING	REPLACEMENT DATA					
			GLOBE PART No.		LITTELFUSE PART No.		BUSS PART No.	
			FUSE	HOLDER	FUSE	HOLDER	FUSE	HOLDER
M3	3AG	2A 250V	1500-011		312002 (3AG 2A 250V)	342001	AGC 2	HKP

MISCELLANEOUS

ITEM No.	PART NAME	GLOBE PART No.	NOTES
M4	Switch	2100-027	Transmitter Crystal (Rotary, Wafer Type)
M5	Switch	2100-028	Receiver Crystal (Rotary, Wafer Type)
M6	Crystal		Transmitter
M7	Crystal		Receiver
M8	Relay	3500-015	
	Microphone	4000-003	

WIRING DATA

General-use Unshielded Hook-up Wire ..... Use BELDEN No. 8530 (Solid) Available in Ten Colors
8524 (Stranded) Available in Ten Colors
Shielded Hook-up Wire ..... Use BELDEN No. 8885
Bonding Strap ..... Use BELDEN No. 8661
Power Cord ..... Use BELDEN No. 1765-B (6 Ft. Length)
1725-K (7½ Ft. Length)

PHOTOFACT® Folder with CIRCUITRACE*

GLOBE MODEL X-90 (Pocketphone)

NOTICE

ONLY THOSE PERSONS PROPERLY LICENSED BY FCC ARE PERMITTED TO MAKE CRYSTAL SUBSTITUTION OR EFFECT REPAIRS ON THE TRANSMITTER PORTION OF THIS UNIT.

TRADE NAME	Globe Model X-90 (Pocketphone)		
MANUFACTURER	Globe Electronics, A Div. of Textron Electronics, Inc., Council Bluffs, Iowa		
TYPE SET	Battery Operated Transistorized Portable Citizens Band Transmitter-Receiver		
POWER SUPPLY	9 Volts DC	RATING	15MA @ 9 Volts DC (No Signal, Minimum Volume)
FREQ. RANGE	Any One of Citizens Band Channels 1 thru 22		18MA @ 9 Volts DC (No Signal, Maximum Volume)
			25MA @ 9 Volts DC (Transmit)

ALIGNMENT INSTRUCTIONS

ALIGNMENT INSTRUCTIONS—READ CAREFULLY BEFORE ATTEMPTING ALIGNMENT

Volume control should be at maximum position. Output of signal generator should be no higher than necessary to obtain an output reading.

Suggested Alignment Tools: A1 thru A5 .... GENERAL CEMENT #9440
A6 ..... GENERAL CEMENT #8282, 8606, 8606L, 9295, 9440
WALSCO #2526, 2543, 2544, 2545

RECEIVER ALIGNMENT

	SIGNAL GENERATOR COUPLING	SIGNAL GENERATOR FREQUENCY	RADIO DIAL SETTING	OUTPUT METER	ADJUST	REMARKS
1.	High side thru .01mfd to base of Receiver Mixer. Low side to foil along board edge.	Frequency of desired operating channel.		Across Voice Coil	A1	Adjust for maximum output, then turn slug clockwise one half turn. Press the push-to-talk switch several times to make sure oscillator starts each time. If it fails to start, turn the adjust further and recheck.
2.	"	"		"	A2, A3, A4	Adjust for maximum output.

TRANSMITTER ALIGNMENT

3. Using an RF Output meter, press push-to-talk switch and adjust A5 for maximum RF output, then turn one half turn clockwise. Press the switch several times to make sure the Oscillator operates. If it fails to start, turn the slug further and recheck. Adjust A6 and A7 for maximum output as indicated on meter. A7 (slug in antenna coil) may not be used.

HOWARD W. SAMS & CO., INC. Indianapolis 6, Indiana

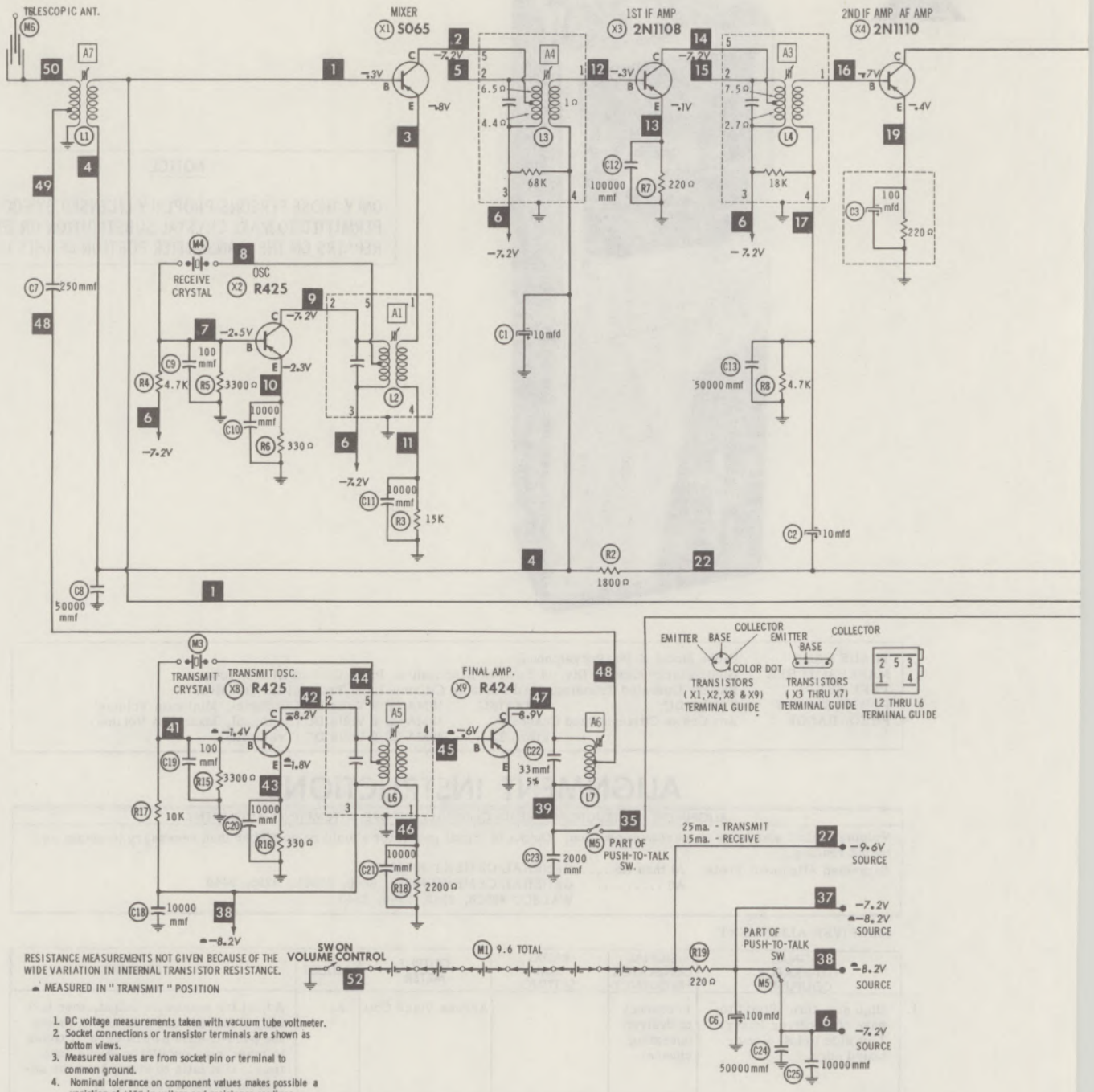

RESISTANCE MEASUREMENTS NOT GIVEN BECAUSE OF THE WIDE VARIATION IN INTERNAL TRANSISTOR RESISTANCE.

-.- MEASURED IN "TRANSMIT" POSITION

1. DC voltage measurements taken with vacuum tube voltmeter.
2. Socket connections or transistor terminals are shown as bottom views.
3. Measured values are from socket pin or terminal to common ground.
4. Nominal tolerance on component values makes possible a variation of ±15% in voltage and resistance readings.
5. Volume control at maximum, no signal applied for voltage measurements.

NUMBERS ASSIGNED TO COILS, SWITCHES, PLUGS, SOCKETS, AND TRANSFORMERS ARE TO FACILITATE CIRCUIT TRACING OR COMPONENT REPLACEMENT AND MAY NOT NECESSARILY BE FOUND ON THE UNIT.

DC COIL RESISTANCE VALUES UNDER ONE OHM NOT SHOWN ON SCHEMATIC DIAGRAM

A PHOTOFACT STANDARD NOTATION SCHEMATIC
with CIRCUITRACE

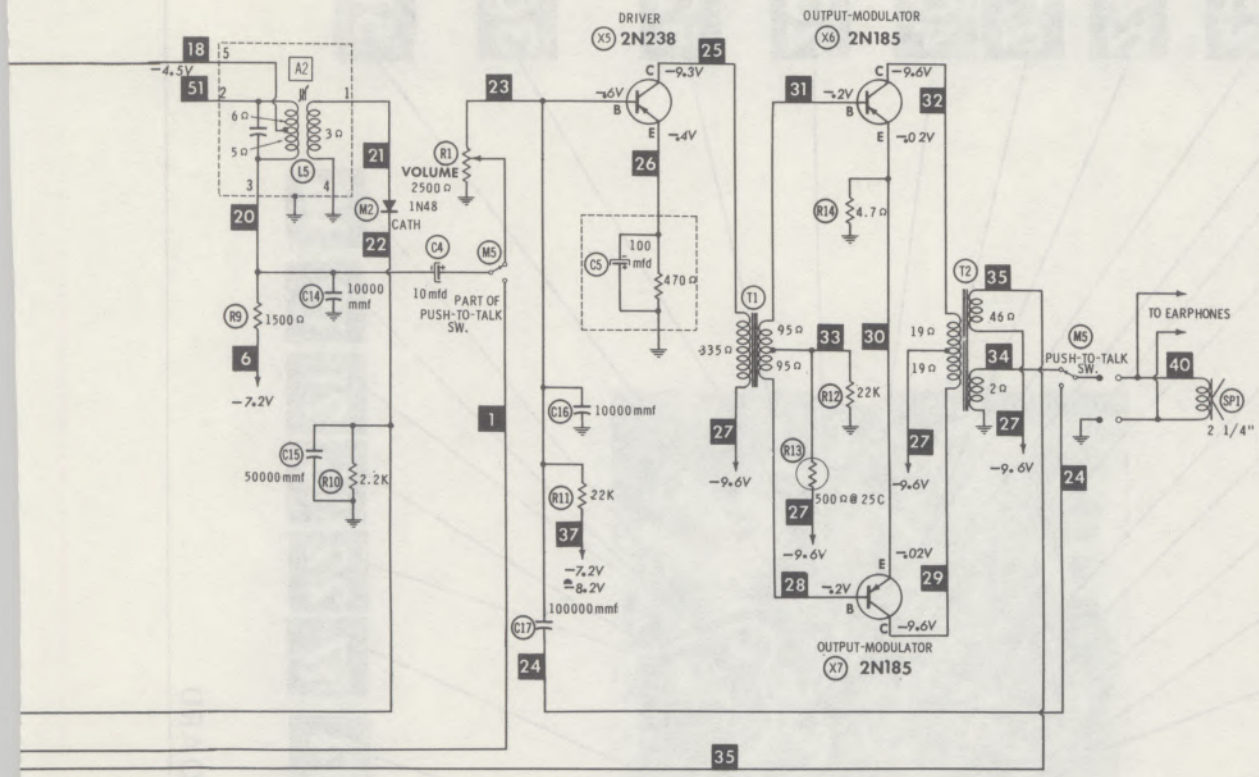

GLOBE MODEL X-90
(Pocketphone)

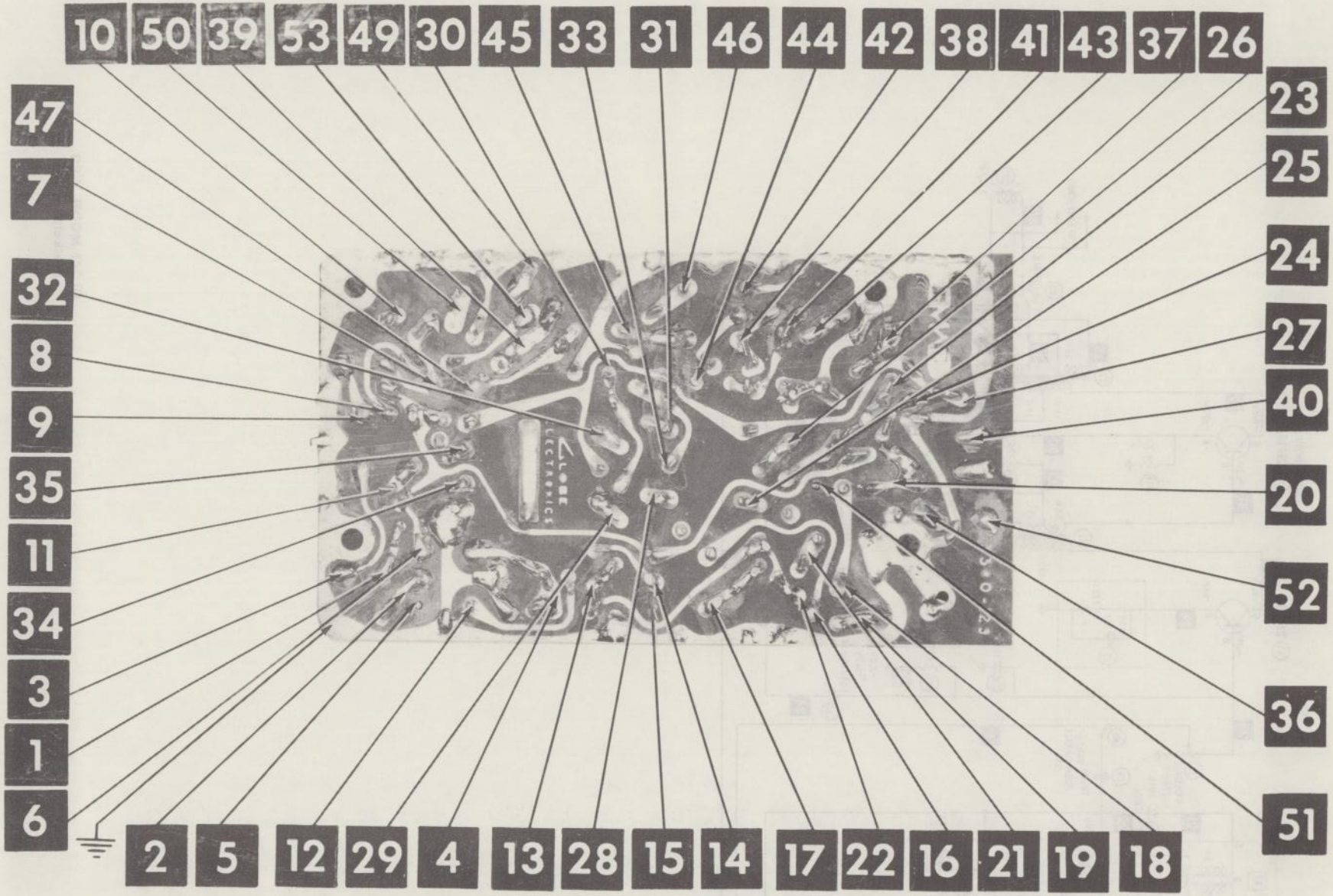

A Howard W. Sams CIRCUITRACE Photo

PRINTED BOARD

PARTS LIST AND DESCRIPTIONS

TRANSISTORS

ITEM No.	ORIG. TYPE	USE	REPLACEMENT DATA			NOTES
			RCA PART No.	RAYTHEON PART No.	SYLVANIA PART No.	
X1	S065	Mixer				PNP
X2	R425	Oscillator				PNP
X3	2N1108	1st IF Amplifier		2N486	2N412	PNP
X4	2N1110	2nd IF Amp. - AF Amp.		2N483	2N409	PNP
X5	2N238 *	Driver	2N407	2N362	2N407	PNP
X6	2N185 *	Output - Modulator	2N407	2N633	2N270	PNP
X7	2N185 *	Output - Modulator	2N407	2N633	2N270	PNP
X8	R425	Trans. Oscillator				PNP
X9	R424	Final Amplifier				PNP

* Supplied as matched kit.

ELECTROLYTIC CAPACITORS

ITEM No.	RATING		REPLACEMENT DATA						NOTES
	CAP.	VOLT.	GLOBE PART No.	AEROVOX PART No.	CORNELL-DUBILIER PART No.	MALLORY PART No.	PYRAMID PART No.	SPRAGUE PART No.	
C1	10	10	1106-026A	BCD10010	ECPB408	PET1340	MLV10-10	VL-1127	
C2	10	10	1106-026A	BCD10010	ECPB408	PET1340	MLV10-10	VL-1127	
C3	100	6	1109-006	BCD6100 †	ECPB117 †	PET1400 †	MLV100-6 †	VL-1100 †	
C4	10	10	1106-026A	BCD10010	ECPB408	PET1340	MLV10-10	VL-1127	
C5	100	6	1109-007	BCD6100 ♦	ECPB117 ♦	PET1400 ♦	MLV100-6 ♦	VL-1100 ♦	
C6	100	10	1106-027	BCD10100	ECPB417	PET1400	MLV100-10	VL-1140	

† Connect 220Ω Resistor across Electrolytic. ♦ Connect 470Ω Resistor across Electrolytic.

FIXED CAPACITORS

Capacity values given in the rating column are in mfd. for Paper Capacitors, and in mmfd. for Mica and Ceramic Capacitors.

ITEM No.	RATING	REMARKS	REPLACEMENT DATA					
			AEROVOX PART No.	CENTRALAB PART No.	CORNELL-DUBILIER PART No.	ELMENCO PART No.	MALLORY PART No.	SPRAGUE PART No.
C7	250		SI 250	D6-251	L10T25	CCD-251	GP325	10TS-T25
C8	50000 10V		C80V503AM	UK10-503	H-05S5		TA150	TG-S50
C9	100		DI-100	DD-101	L10T1	CCD-101	GP310	10TS-T10
C10	10000		C80V103AM	DM-103	H-05S1		TA-110	TG-S10
C11	10000		C80V103AM	DM-103	H-05S1		TA-110	TG-S10
C12	100000 10V		C80V104AM	UK10-104	H-05P1		TA-010	TG-P10
C13	50000 10V		C80V503AM	UK10-503	H-05S5		TA-150	TG-S50
C14	10000		C80V103AM	DM-103	H-05S1		TA-110	TG-S10
C15	50000 10V		C80V503AM	UK10-503	H-05S5		TA-150	TG-S50

FIXED CAPACITORS (cont)

ITEM No.	RATING	REMARKS	REPLACEMENT DATA					
			AEROVOX PART No.	CENTRALAB PART No.	CORNELL-DUBILIER PART No.	ELMENCO PART No.	MALLORY PART No.	SPRAGUE PART No.
C16	10000		C80V103AM	DM-103	H-05S1		TA-110	TG-S10
C17	100000 10V		C80V104AM	UK10-104	H-05P1		TA-010	TG-P10
C18	10000		C80V103AM	DM-103	H-05S1		TA-110	TG-S10
C19	100		DI-100	DD-101	L10T1	CCD-101	GP310	10TS-T10
C20	10000		C80V103AM	DM-103	H-05S1		TA-110	TG-S10
C21	10000		C80V103AM	DM-103	H-05S1		TA-110	TG-S10
C22	33 5%		1469-000033	TCZ-33	22R5Q33	CM-19B-330J	CNO-433	MS-433
C23	2000		DI-2000	DD-202	BYA10D2	CCD-202	GP220	5HK-D20
C24	50000		C80V503AM	UK10-503	H-05S5		TA-150	TG-S50
C25	10000		C80V103AM	DM-103	H-05S1		TA-110	TG-S10

CONTROLS

ITEM No.	RATING		REPLACEMENT DATA					INSTALLATION NOTES
	RESIST-ANCE	WATTS	GLOBE PART No.	CENTRALAB PART No.	CLAROSTAT PART No.	CTS-IRC PART No.	MALLORY PART No.	
R1	2500Ω	1/10	2300-018	B16-212				Volume and Switch

RESISTORS

All wattages 1/2 watt, or less, unless otherwise listed.

ITEM No.	RATING	REPLACEMENT DATA		
		IRC PART No.	WORKMAN TV PART No.	REMARKS
R2	1800Ω			
R3	15K			
R4	4700Ω			
R5	3300Ω			
R6	330Ω			
R7	220Ω			
R8	2200Ω			
R9	1500Ω			
R10	4700Ω			

ITEM No.	RATING	REPLACEMENT DATA		
		IRC PART No.	WORKMAN TV PART No.	REMARKS
R11	22K			
R12	22K			
R13	500Ω @ 25°C.			
R14	4.7Ω			
R15	3300Ω			
R16	330Ω			
R17	10K			
R18	2200Ω			
R19	220Ω			

PARTS LIST AND DESCRIPTIONS (Continued)

COILS (RF-IF)

ITEM No.	USE	REPLACEMENT DATA					NOTES
		GLOBE PART No.	Merit PART No.	Miller PART No.	Stancor PART No.	Workman TV PART No.	
L1	Antenna	1400-113					
L2	Oscillator	1205-008					
L3	1st IF	1205-002					
L4	2nd IF	1205-003					
L5	3rd IF	1205-004					
L6	Trans. Oscillator	1205-005					
L7	Final Amp. Plate	1400-114					

TRANSFORMER (DRIVER)

ITEM No.	TURNS RATIO		REPLACEMENT DATA					NOTES
	PRI.	SEC.	GLOBE PART No.	Merit PART No.	Stancor PART No.	Thordarson PART No.	Triad PART No.	
T1	1.7	1	1203-012		TA-28			

TRANSFORMER (AUDIO OUTPUT)

ITEM No.	IMPEDANCE		REPLACEMENT DATA					NOTES
	PRI.	SEC.1	GLOBE PART No.	Merit PART No.	Stancor PART No.	Thordarson PART No.	Triad PART No.	
T2	700Ω CT	6-8Ω SEC. 2 550Ω	1203-013					

SPEAKER

ITEM No.	TYPE			REPLACEMENT DATA		NOTES
	SIZE	FIELD	V. C. IMP.	GLOBE PART No.	QUAM PART No.	
SP1	2 1/4"	PM	6-8Ω	4002-004	22A06Z8	

BATTERIES

ITEM No.	VOLTAGE	GLOBE PART No.	REPLACEMENT DATA						NOTES
			BURGESS		EVEREADY		MALLORY		
			"A"	"B"	"A"	"B"	"A"	"B"	
M1	9.6V	1902-025 *		CD-4L *					* 8 Required (Nickel Cadium)

SIGNAL DIODES

ITEM No.	ORIG. TYPE	REPLACEMENT DATA				NOTES
		GLOBE PART No.	GENERAL ELECTRIC PART No.	RAYTHEON PART No.	SYLVANIA PART No.	
M2	1N48	3700-058		1N295	1N295	Detector (Pigtail)

MISCELLANEOUS

ITEM No.	PART NAME	GLOBE PART No.	NOTES
M3	Crystal		Transmit (Specify Channel & Frequency Desired)
M4	Crystal		Receive (Specify Channel & Frequency Desired)
M5	Switch	2102-004	Push to talk (Spring Return, Pushbutton Type)
M6	Antenna	4003-001	Whip
	Earphone	4000-009	(15Ω)

WIRING DATA

General-use Unshielded Hook-up Wire ..... Use BELDEN No. 8530 (Solid) Available in Ten Colors
8524 (Stranded) Available in Ten Colors

CHASSIS—TOP VIEW

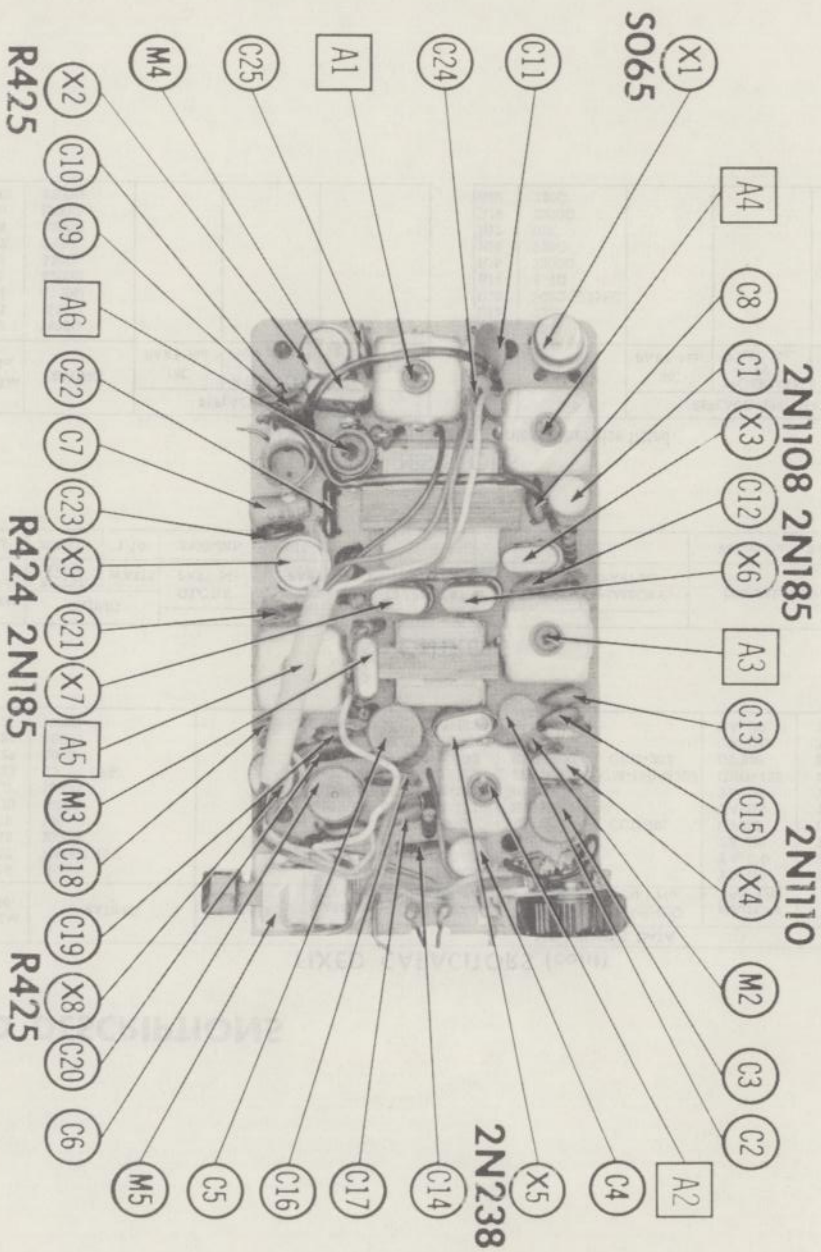

PHOTOFACT® Folder

GONSET MODELS G-11-3303, G-11-3304, G-11-3305

MODEL G-11-3304

TRADE NAME	Gonset Models G-11-3303, G-11-3304, G-11-3305
MANUFACTURER	Gonset, Div. of Young Spring & Wire Corp., 801 S. Main Street, Burbank, California
TYPE SET	Crystal Controlled Single Channel 9 Tube Citizens Band Transmitter-Receiver
POWER SUPPLY	Model G-11-3303: 110-120 Volts AC, 60 Cycles Model G-11-3304: 12 Volt Storage Battery Model G-11-3305: 6 Volt Storage Battery
RATING	4.6 Amp. @12.6 Volts DC (or) 9.2 Amp. @6.3 Volts DC
TUNING RANGE	Any one of Citizens Band Channels 1 thru 22

NOTICE

ONLY THOSE PERSONS PROPERLY LICENSED BY FCC ARE PERMITTED TO MAKE CRYSTAL SUBSTITUTION OR EFFECT REPAIRS ON THE TRANSMITTER PORTION OF THIS UNIT.

ALIGNMENT INSTRUCTIONS

RECEIVER

Connect DC probe of VTVM to point Ⓐ, Common to chassis. Turn Squelch Control R2 to maximum clockwise direction.

Use a test transmitter on the proper channel, align A1, A2, A3, A4, A5 and A6 for maximum deflection on VTVM. (If signal is too strong, remove antenna to reduce signal strength sufficiently to keep AVC voltage only slightly above no signal level).

Adjust A7 for maximum receiver noise.

TRANSMITTER

Using a Frequency Meter, adjust A8 to frequency indicated on oscillator crystal, (within 100 cps).

Connect DC probe of VTVM to point Ⓑ, Common to chassis. Adjust A9 for maximum deflection.

Adjust A10 and A11 alternately for maximum tuning indicator lamp brightness, adjusting A11 last.

HOWARD W. SAMS & CO., INC. Indianapolis 6, Indiana

GONSET MODELS G-11-3303, G-11-3304, G-11-3305

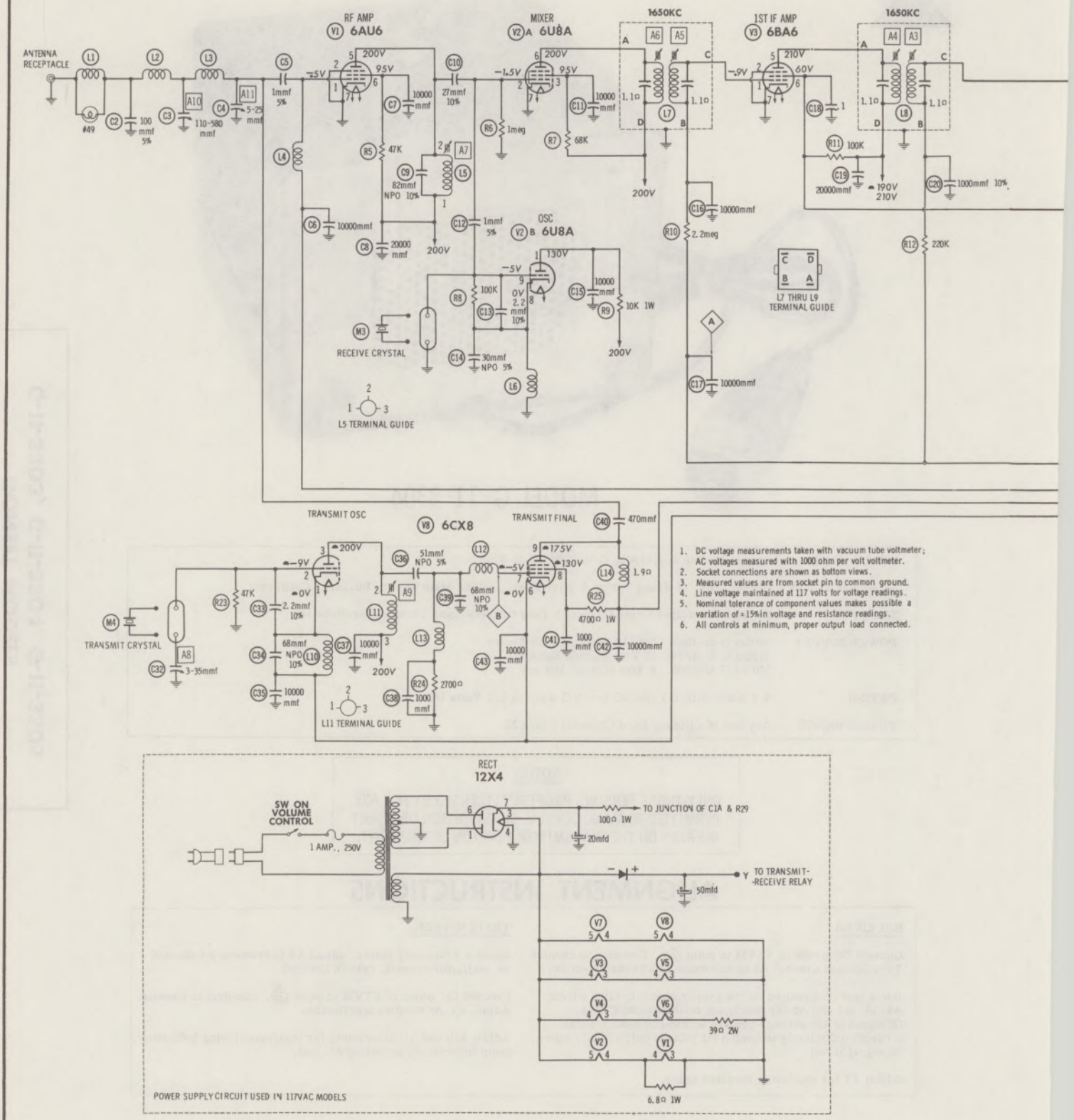

1. DC voltage measurements taken with vacuum tube voltmeter; AC voltages measured with 1000 ohm per volt voltmeter.
2. Socket connections are shown as bottom views.
3. Measured values are from socket pin to common ground.
4. Line voltage maintained at 117 volts for voltage readings.
5. Nominal tolerance of component values makes possible a variation of ±15% in voltage and resistance readings.
6. All controls at minimum, proper output load connected.

NUMBERS ASSIGNED TO COILS, SWITCHES, PLUGS, SOCKETS, AND TRANSFORMERS ARE TO FACILITATE CIRCUIT TRACING OR COMPONENT REPLACEMENT AND MAY NOT NECESSARILY BE FOUND ON THE UNIT.

A PHOTOFACT STANDARD NOTATION SCHEMATIC

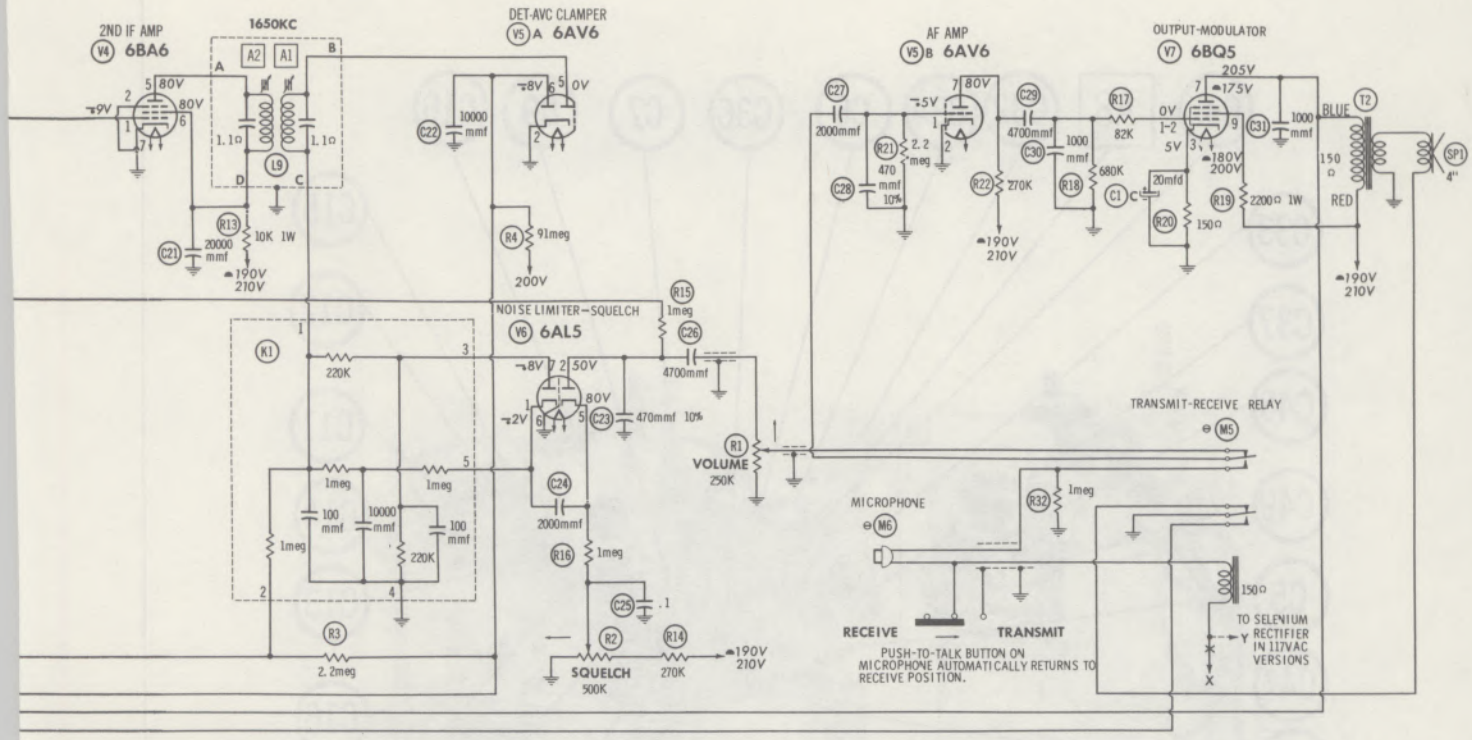

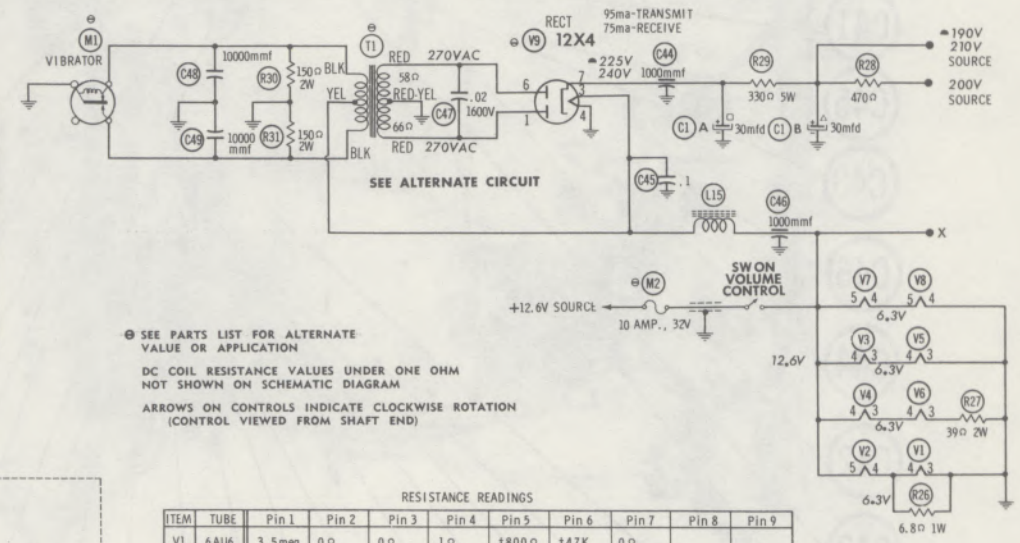

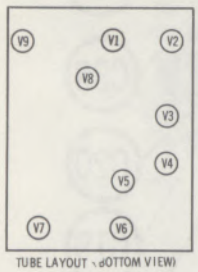

TUBE LAYOUT (BOTTOM VIEW)

⊖ SEE PARTS LIST FOR ALTERNATE VALUE OR APPLICATION

DC COIL RESISTANCE VALUES UNDER ONE OHM NOT SHOWN ON SCHEMATIC DIAGRAM

ARROWS ON CONTROLS INDICATE CLOCKWISE ROTATION (CONTROL VIEWED FROM SHAFT END)

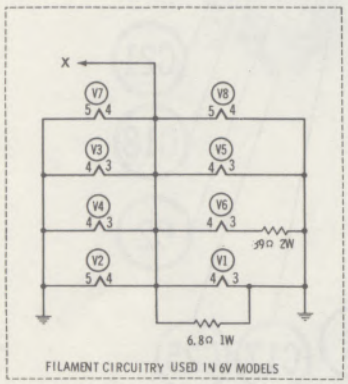

FILAMENT CIRCUITRY USED IN 6V MODELS

RESISTANCE READINGS

ITEM	TUBE	Pin 1	Pin 2	Pin 3	Pin 4	Pin 5	Pin 6	Pin 7	Pin 8	Pin 9
V1	6AU6	3.5meg	0Ω	0Ω	1Ω	†800Ω	†47K	0Ω		
V2	6U8A	†10K	1meg	†68K	1Ω	2Ω	†800Ω	0Ω	0Ω	100K
V3	6BA6	3.5meg	0Ω	1Ω	2Ω	†930Ω	†100K	0Ω		
V4	6BA6	1.6meg	0Ω	.1Ω	2Ω	†10K	†10K	0Ω		
V5	6AV6	2.2meg	0Ω	0Ω	1Ω	440K	3.5meg	†270K		
V6	6AL5	2.4meg	†1.1meg	3Ω	1Ω	1.3meg	0Ω	220K		
V7	6BQ5	NC	760K	150Ω	1Ω	2Ω	NC	†480Ω	NC	†2500Ω
V8	6CX8	▲0Ω	47K	†800Ω	0Ω	1Ω	▲0Ω	2700Ω	†5200Ω	†480Ω
V9	12X4	66Ω	NC	2Ω	0Ω	NC	58Ω	¶		

ALL MEASUREMENTS MADE IN "RECEIVE" POSITION UNLESS OTHERWISE DESIGNATED.
▲ MEASURED IN "TRANSMIT" POSITION.
† MEASURED FROM PIN 7 OF V9.
¶ THIS READING WILL VARY DEPENDING UPON THE CONDITION OF THE ELECTROLYTIC INTHE CIRCUIT.
NC NO CONNECTION

GONSET MODELS
G-11-3303, G-11-3304, G-11-3305

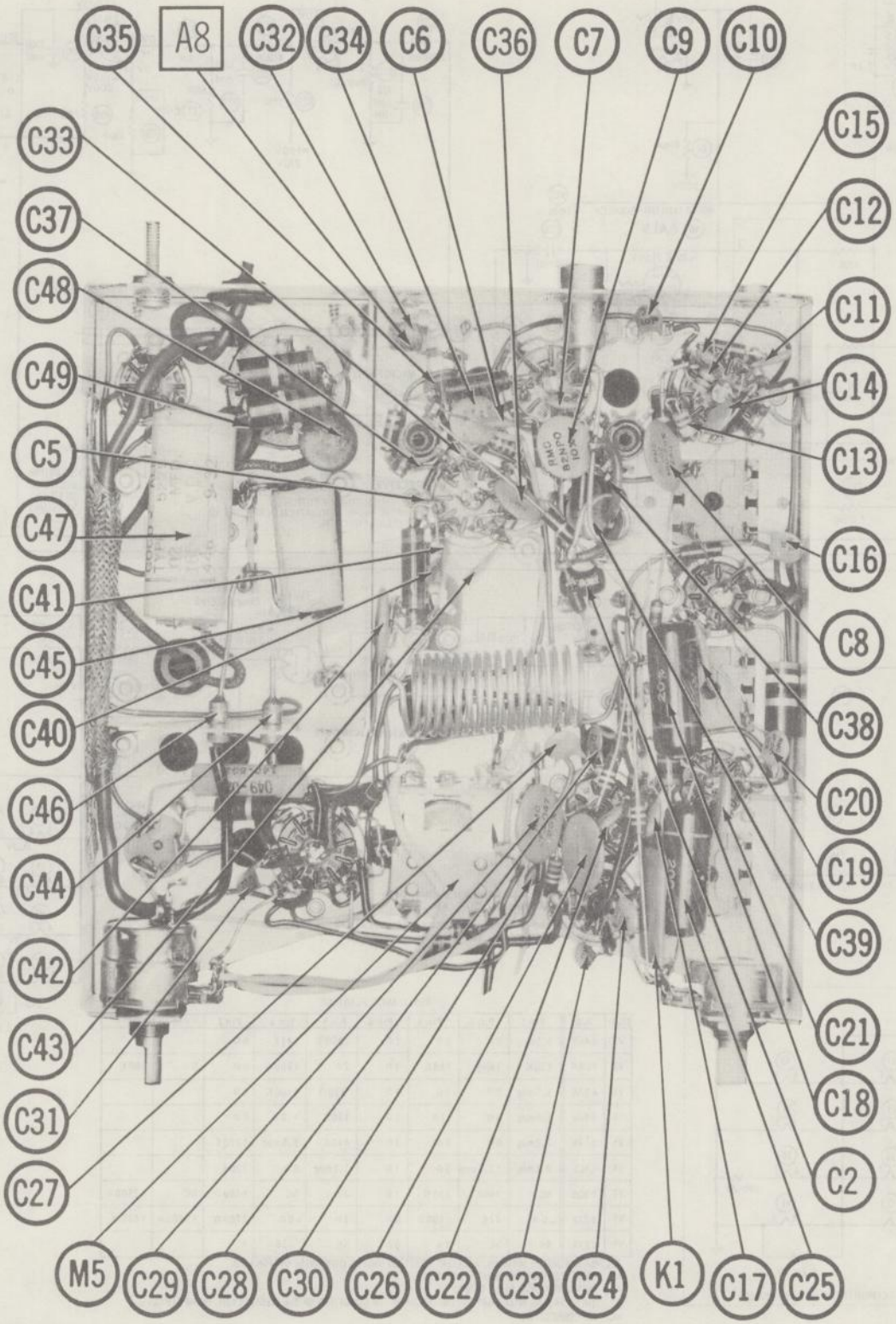

CHASSIS BOTTOM VIEW-ALIGNMENT, CAPACITOR & MISC. IDENT.

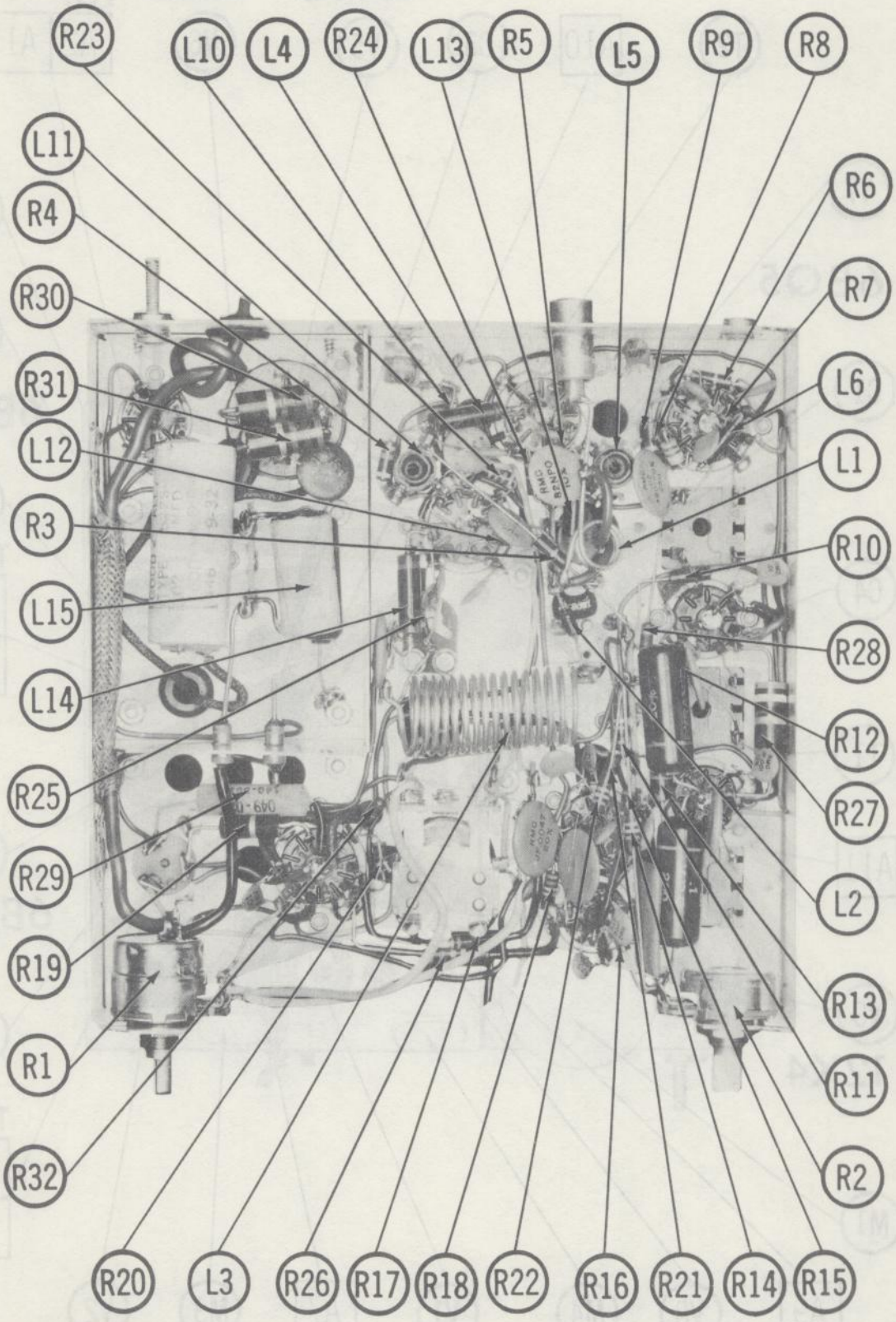

CHASSIS BOTTOM VIEW-RESISTOR & INDUCTOR IDENT.

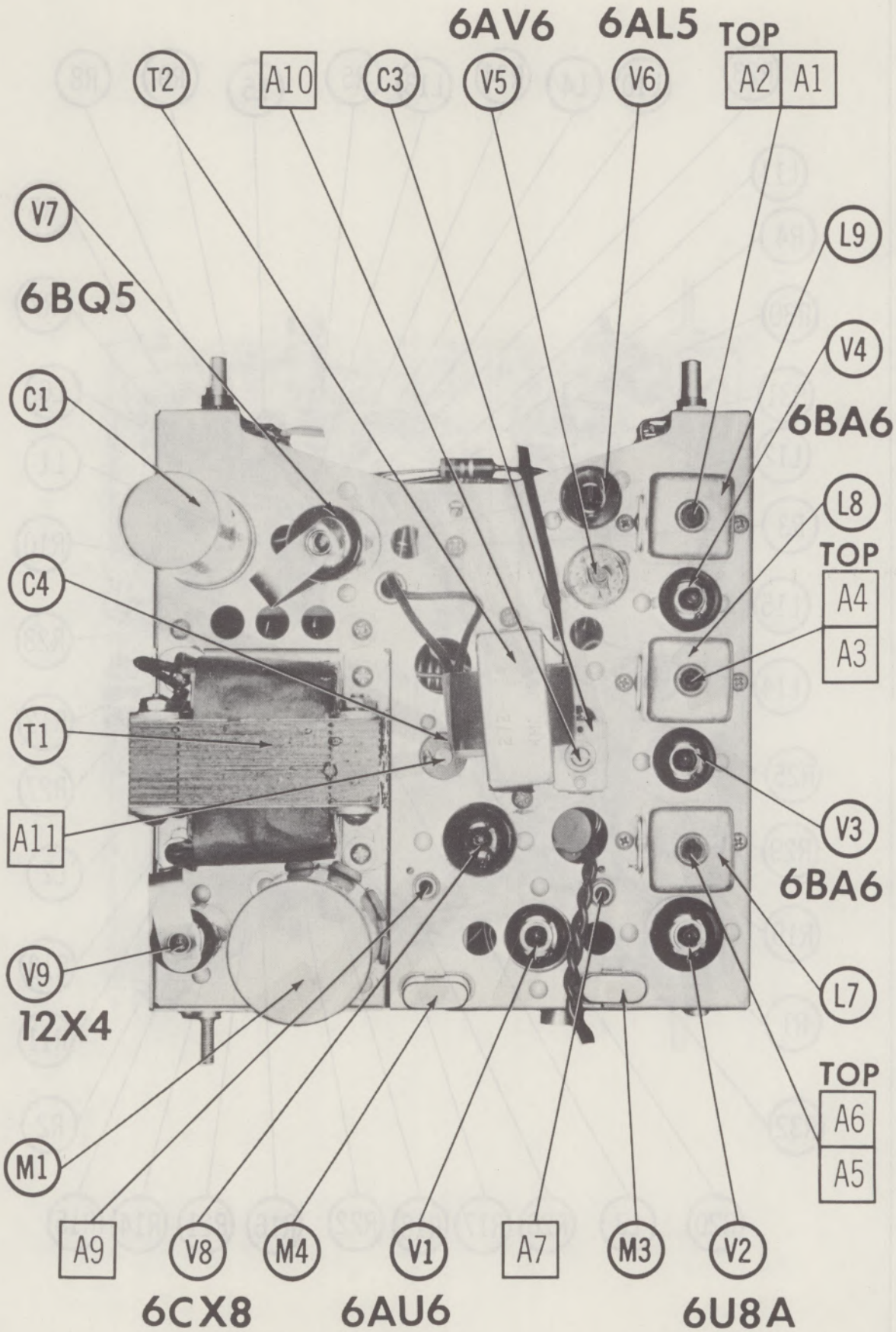

CHASSIS - TOP VIEW

PARTS LIST AND DESCRIPTIONS

TUBES

ITEM No.	USE	TYPE (GENERAL ELECTRIC / RAYTHEON / SYLVANIA)
V1	RF Amplifier	6AU6
V2	Mixer-Osc.	6U8A
V3	1st IF Amp.	6BA6
V4	2nd IF Amp.	6BA6
V5	Det. -AVC Clamper-AF Amp	6AV6
V6	Noise Lim. -Squelch	6AL5
V7	Output-Modulator	6BQ5
V8	Trans. Osc. -Trans. Final	6CX8
V9	Rectifier	12X4 *

* Model 3305 uses 6X4 in this application.

ELECTROLYTIC CAPACITORS

ITEM No.	RATING CAP.	RATING VOLT.	GONSET PART No.	AEROVOX PART No.	CORNELL-DUBILIER PART No.	MALLORY PART No.	PYRAMID PART No.	SPRAGUE PART No.	NOTES
C1A	■30	350	073-061	AFH3-169	C0830	FP331	TMT-3334	TVL-3620	
B	▲30	300							
C	20	25							

FIXED CAPACITORS

Capacity values given in the rating column are in mfd. for Paper Capacitors, and in mmfd. for Mica and Ceramic Capacitors.

ITEM No.	RATING	REMARKS	AEROVOX PART No.	CENTRALAB PART No.	CORNELL-DUBILIER PART No.	ELMENCO PART No.	MALLORY PART No.	SPRAGUE PART No.
C2	100 5%		1469-0001	TCZ-100	22R5T1	CM-19B-101K	MCB235	MS-31
C3	110-580	#089-024				467		
C4	5-25	#089-031		827C		421		
C5	1 5%		NPO-SI 1.0	TCZ-1			CNO-510	10TCC-V10
C6	10000		BPD-01	DD-103	H-05S1	CCD-103	TA-110	TG-S10
C7	10000		BPD-01	DD-103	H-05S1	CCD-103	TA-110	TG-S10
C8	20000		BPD-02	DD-203	BYB6S2	CCD-203	B-120	5HK-S20
C9	82 NPO 10%			DTZ-82	C10Q82C	CCTO-820	CNO-482	10TCC-Q82
C10	27 10%		DI-27	DD-270	L10Q27	CCD-270	GP427	10TS-Q27
C11	10000		BPD-01	DD-103	H-05S1	CCD-103	TA-110	TG-S10
C12	1 5%		NPO-SI 1.0	TCZ-1			CNO-510	10TCC-V10
C13	2.2 10%		NPO-SI 2.2	TCZ-2R2	C10V22C	CCTO-2R2	CNO-522	10TCC-V22
C14	30 NPO 5%			TCZ-30	C10Q3C	CM-19B-300J		10TCC-Q30
C15	10000		BPD-01	DD-103	H-05S1	CCD-103	TA-110	TG-S10
C16	10000		BPD-01	DD-103	H-05S1	CCD-103	TA-110	TG-S10
C17	10000		BPD-01	DD-103	H-05S1	CCD-103	TA-110	TG-S10
C18	.1 200V		P288N-1	DF-104	CUB2P1	2DP-3-104	GEM-201	2TM-P10
C19	20000		BPD-02	DD-203	BYB6S2	CCD-203	B-120	5HK-S20
C20	1000 10%		DI-1000	DD-102	5R5D1	CCD-102	GP210	10TS-D10
C21	20000		BPD-02	DD-203	BYB6S2	CCD-203	B-120	5HK-S20
C22	10000		BPD-01	DD-103	H-05S1	CCD-103	TA-110	TG-S10
C23	470 10%		DI-470	DD-471	5R5T47	CCD-471	GP347	10TS-T47
C24	2000		BPD-002	DD-202	BYA10D2	CCD-202	B-220	5HK-D20
C25	.1 200V		P288N-1	DF-104	CUB2P1	2DP-3-104	GEM-201	2TM-P10
C26	4700		BPD-0047	DD-472	BYA10D47M	CCD-472	B-247	5HK-D47
C27	2000		BPD-002	DD-202	BYA10D2	CCD-202	B-220	5HK-D20
C28	470 10%		DI-470	DD-471	5R5T47	CCD-471	GP347	10TS-T47
C29	4700		BPD-0047	DD-472	BYA10D47M	CCD-472	B-247	5HK-D47
C30	1000		BPD-001	DD-102	BYA10D1	CCD-102	B-210	5HK-D10
C31	1000		BPD-001	DD-102	BYA10D1	CCD-102	B-210	5HK-D10
C32	3-35					403		
C33	2.2 10%		NPO-SI 2.2	TCZ-2R2	C10V22C	CCTO-2R2	CNO-522	10TCC-V22
C34	68 NPO 10%		NPO-DI 68	DTZ-68	C10Q68C	CCTO-680	CNO-468	10TCC-Q68
C35	10000		BPD-01	DD-103	H-05S1	CCD-103	TA-110	TG-S10
C36	51 NPO 5%			TCZ-51	C10Q51C	CM-19B-510J	CNO-450	10TCC-Q50
C37	10000		BPD-01	DD-103	H-05S1	CCD-103	TA-110	TG-S10
C38	1000		BPD-001	DD-102	BYA10D1	CCD-102	B-210	5HK-D10
C39	68 NPO 10%		NPO-DI 68	DTZ-68	C10Q68C	CCTO-680	CNO-468	10TCC-Q68
C40	470		BPD-00047	DD-471	BYA10T47	CCD-471	B-347	10TS-T47
C41	1000		BPD-001	DD-102	BYA10D1	CCD-102	B-210	5HK-D10
C42	10000		BPD-01	DD-103	H-05S1	CCD-103	TA-110	TG-S10
C43	10000		BPD-01	DD-103	H-05S1	CCD-103	TA-110	TG-S10

FIXED CAPACITORS (cont)

ITEM No.	RATING	REMARKS	AEROVOX PART No.	CENTRALAB PART No.	CORNELL-DUBILIER PART No.	ELMENCO PART No.	MALLORY PART No.	SPRAGUE PART No.
C44	1000		EF-001	MFT-1000		CCF-102	CT280A	
C45	.1 200V		P288N-1	DF-104	CUB2P1	2DP-3-104	GEM-201	2TM-P10
C46	1000		EF-001	MFT-1000		CCF-102	CT280A	
C47	.02 1600V		P1684CM-02		CUB16S2	16DP-4-203	GEM-1612	MB-S2
C48	10000		BPD-01	DD-103	BYA10S1	CCD-103	B-110	5HK-S10
C49	10000		BPD-01	DD-103	BYA10S1	CCD-103	B-110	5HK-S10

\# Gonset Part Number.

CONTROLS

ITEM No.	RATING RESISTANCE	RATING WATTS	GONSET PART No.	CENTRALAB PART No.	CLAROSTAT PART No.	CTS-IRC PART No.	MALLORY PART No.	INSTALLATION NOTES
R1A	250K	½	052-049	B-51	A47-250K-Z	Q13-130	U44	Volume
B	Shaft			Not Req.	FS-3	Not Req.	Not Req.	
C	Switch			KR-1	SWE-12	76-1	US-26	Power Off-On
R2A	500K	½	052-048	B-59	A47-500K-S	Q11-133	U50	Squelch
B	Shaft			Not Req.	FS-3	Not Req.	Not Req.	

RESISTORS

All wattages 1/2 watt, or less, unless otherwise listed.

ITEM No.	RATING	IRC PART No.	WORKMAN TV PART No.	REMARKS
R3	2.2meg			
R4	91meg			
R5	47K			
R6	1meg			
R7	68K			
R8	100K			
R9	10K 1W			
R10	2.2meg			
R11	100K			
R12	220K			
R13	10K 1W			
R14	270K			
R15	1meg			
R16	1meg			
R17	82K			
R18	680K			
R19	2200Ω 1W			
R20	150Ω			
R21	2.2meg			
R22	270K			
R23	47K			
R24	2700Ω			
R25	4700Ω 1W			
R26	6.8Ω 1W			
R27	39Ω			
R28	470Ω			
R29	330Ω 5W	PW5-330	5W-SQ-330	
R30	150Ω 2W			
R31	150Ω 2W			
R32	1meg			

COILS (RF-IF)

ITEM No.	USE	GONSET PART No.	Merit PART No.	Miller PART No.	Stancor PART No.	Workman TV PART No.	NOTES
L1	Output Indicator						
L2	RF Choke (.56uh)	027-077	BC-560	4588	RTC-8513	T958	
L3	Ant.	011-119					
L4	RF Choke (5.6uh)	027-028	BC-565	4609	RTC-8519	T959	
L5	RF	012-068	TV-118	6171-A	RTC-8609	T216	
L6	RF Choke (1.5uh)	027-045	BC-562	4604	RTC-8516	T856	
L7	1st IF	014-030					
L8	2nd IF	014-030					
L9	3rd IF	014-030					
L10	RF Choke (5.6uh)	027-028	BC-565	4609	RTC-8519	T959	
L11	Osc. Plate	012-169	TV-118	6171-A	RTC-8609	T216	
L12	RF Choke (.47uh)	027-073		4588	RTC-8513	T958	
L13	RF Choke (5.6uh)	027-028	BC-565	4609	RTC-8519	T959	
L14	RF Choke (15uh)	027-032		4624	RTC-8524	T862	
L15	Hash Choke (65uh)	027-027					

PARTS LIST AND DESCRIPTIONS (Continued)

TRANSFORMER (POWER)

ITEM No.	RATING			REPLACEMENT DATA					NOTES
	PRI.	SEC. 1	SEC. 2	GONSET PART No.	Merit PART No.	Stancor PART No.	Thordarson PART No.	Triad PART No.	
T1	12.6VCT @ 2.8A	540VCT @ .095A		271-022 ①					

① Part #271-025 used in Model G11-3303 (117V)
Part #271-026 used in Model G11-3305 (6V).

TRANSFORMER (AUDIO OUTPUT)

ITEM No.	IMPEDANCE		REPLACEMENT DATA					NOTES
	PRI.	SEC.	GONSET PART No.	Merit PART No.	Stancor PART No.	Thordarson PART No.	Triad PART No.	
T2	2700Ω	3-4Ω	272-004		A-3876			

SPEAKER

ITEM No.	TYPE			REPLACEMENT DATA		NOTES
	SIZE	FIELD	V. C. IMP.	GONSET PART No.	QUAM PART No.	
SP1	4"	PM	3-4Ω	152-015 *	4A10T *	* Weatherproof Cone

COMPONENT COMBINATIONS

ITEM No.	USE	DESCRIPTION	GONSET PART No.	REPLACEMENT DATA
K1	Noise Clipper Network	(2) 100mmf, 10000mmf, (2) 220K, (3) 1meg	069-003	

VIBRATOR

ITEM No.	TYPE	INPUT VOLTS	FRE-QUENCY	REPLACEMENT DATA				NOTES
				GONSET PART No.	CORNELL-DUBILIER PART No.	MALLORY PART No.	RADIART PART No.	
M1	Interrupter	12.3V	115~	G1601	6301	G1601	6301	Model 3304
	Interrupter	6.3V	115~	1601	5301	1601	5301	Model 3305

FUSES

ITEM No.	TYPE	RATING	REPLACEMENT DATA					
			GONSET PART No.		LITTELFUSE PART No.		BUSS PART No.	
			FUSE	HOLDER	FUSE	HOLDER	FUSE	HOLDER
M2	SFE	10A * 32V			307010 * (SFE 10A 32V)	155009 *	SFE 10 *	HHH *
	SFE	20A ♦ 32V			311020 ♦ (SFE 20A 32V)	155020 ♦	SFE 20 ♦	HRJ ♦
	3AG	1A ‡ 250V			313001 ‡ (3AG 1A 250V)		AGC 1 ‡	

* Model 3304
♦ Model 3305
‡ Model 3303

MISCELLANEOUS

ITEM No.	PART NAME	GONSET PART No.	NOTES
M3	Crystal		Receive (order by desired Channel Freq.)
M4	Crystal		Transmit (order by desired Channel Freq.)
M5	Relay	111-019	Models 3303 & 3304
	Relay	111-082	Model 3305
M6	Microphone	113-014 (or) 113-015	

CABINETS & CABINET PARTS

(When Ordering Cabinets & Cabinet Parts, Specify Model, Chassis & Color)

NAME	PART NO.	DESCRIPTION
Front Panel	505-203	
Cabinet	465-056	

WIRING DATA

General-use Unshielded Hook-up Wire ..... Use BELDEN No. 8530 (Solid) Available in Ten Colors
8524 (Stranded) Available in Ten Colors
Shielded Hook-up Wire ..... Use BELDEN No. 8885
Bonding Strap ..... Use BELDEN No. 8661
Power Cord ..... Use BELDEN No. 1765-B (6 Ft. Length)
1725-K (7½ Ft. Length)

PHOTOFACT® Folder

GONSET MODEL G-12 (3316) (3329)

MODEL G-12(3316)

NOTICE

ONLY THOSE PERSONS PROPERLY LICENSED BY FCC ARE PERMITTED TO MAKE CRYSTAL SUBSTITUTION OR EFFECT REPAIRS ON THE TRANSMITTER PORTION OF THIS UNIT.

TRADE NAME	Gonset Models G-12 (3316), G-12 (3329)
MANUFACTURER	Gonset Div., Young Spring & Wire Corp., 801 S. Main Street, Burbank, Calif.
TYPE SET	AC (or) Battery Operated Crystal Controlled 8 Tube Citizens Band Transmitter-Receiver
POWER SUPPLY	3316: 110-120 Volts AC, 60 Cycles (or) 12 Volt Storage Battery 3329: 110-120 Volts AC, 60 Cycles (or) 6 Volt Storage Battery
RATING	AC: 50 Watts, .5 Amp. @117 Volts AC 12VDC: 3.8 Amp. @12.6 Volts DC 6VDC: 7.6 Amp. @6.3 Volts DC
FREQUENCY RANGE	Any 4 of Citizens Band Channels 1 thru 22

ALIGNMENT INSTRUCTIONS

ALIGNMENT INSTRUCTIONS—READ CAREFULLY BEFORE ATTEMPTING ALIGNMENT

Suggested Alignment Tools:	A1 thru A7, A9...	GENERAL CEMENT #9296, 9297 WALSCO #2546, 2547
	A8, A10.....	GENERAL CEMENT #5000, 5003, 5066, 8276, 8290, 9087, 9089 WALSCO #2512, 2525, 2528
	A11.....	GENERAL CEMENT #5004, 5009, 8195, 8274, 8275, 8607, 8728, 8987, 8988, 8989, 9291 WALSCO #2515, 2520, 2522, 2523, 2531, 2532, 2534, 2537, 2538

RECEIVER ALIGNMENT

	SIGNAL GENERATOR COUPLING	SIGNAL GENERATOR FREQUENCY	RADIO DIAL SETTING	CONNECT VTVM	ADJUST	REMARKS
1.	High side thru .001mfd to pin 2 (grid) of Mixer. Low side to chassis.	1650KC		DC probe to point (A). Common to chassis.	A1, A2, A3, A4, A5, A6	Adjust for maximum deflection on first peak as slug enters coil. (Attenuate generator for -3V max.)
2.	Adjust A7 for maximum receiver background noise.					

TRANSMITTER ALIGNMENT

1.	Connect a 52Ω dummy load to the antenna jack.
2.	Using a frequency measuring instrument, adjust A8 to frequency indicated on crystal (within 100%).
3.	Adjust A9 for maximum voltage at point (B) (pin 7 of V8).
4.	Adjust A10 and A11 for maximum indicator lamp brightness. Start with A10 at maximum capacity.

HOWARD W. SAMS & CO., INC. Indianapolis 6, Indiana

GONSET MODEL G-12 (3316) (3329)

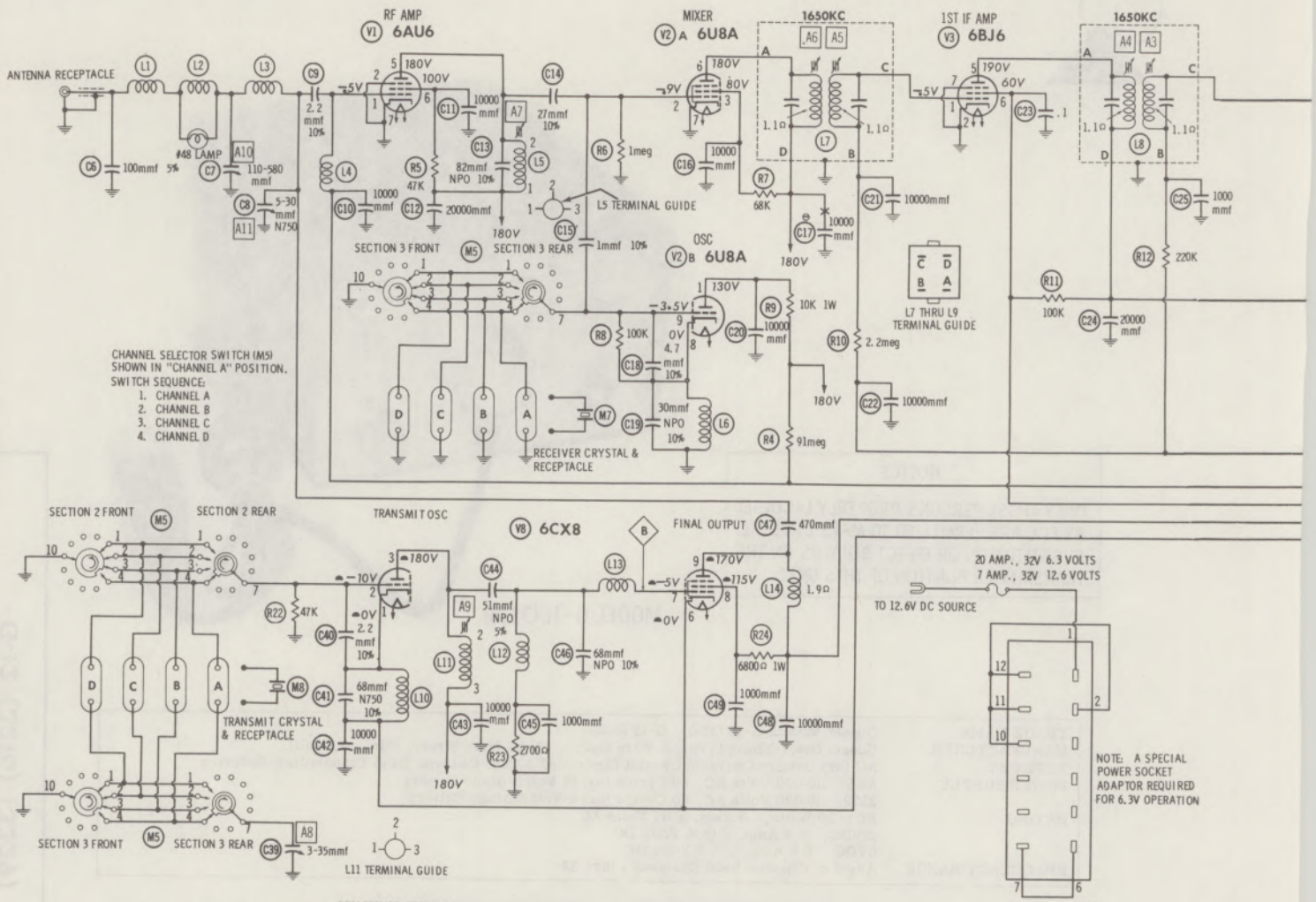

RESISTANCE READINGS

ITEM	TUBE	Pin 1	Pin 2	Pin 3	Pin 4	Pin 5	Pin 6	Pin 7	Pin 8	Pin 9
V1	6AU6	3.6meg	0Ω	.2Ω	0Ω	†900Ω	†48K	0Ω		
V2	6U8A	†11K	1meg	†68K	.5Ω	.2Ω	†900Ω	0Ω	0Ω	100K
V3	6BJ6	3.6meg	0Ω	.2Ω	.5Ω	†430Ω	†100K	0Ω		
V4	6BA6	1.6meg	0Ω	.2Ω	.5Ω	†10K	†10K	0Ω		
V5	6AL5	2.4meg	†1.1meg	3Ω	.2Ω	1.1meg	0Ω	220K		
V6	6AV6	2.2meg	0Ω	0Ω	.2Ω	440K	3.6meg	†270K		
V7	6BQ5	NC	760K	150Ω	.5Ω	.2Ω	NC	†580Ω	NC	†2600Ω
V8	6CX8	▲.5Ω	47K	†900Ω	0Ω	.2Ω	▲0Ω	2700Ω	†7300Ω	†600Ω

ALL MEASUREMENTS MADE IN "RECEIVE" POSITION UNLESS OTHERWISE DESIGNATED.
▲ MEASURED IN "TRANSMIT" POSITION.
† MEASURED FROM OUTPUT OF M1.

NC NO CONNECTION

A PHOTOFACT STANDARD NOTATION SCHEMATIC

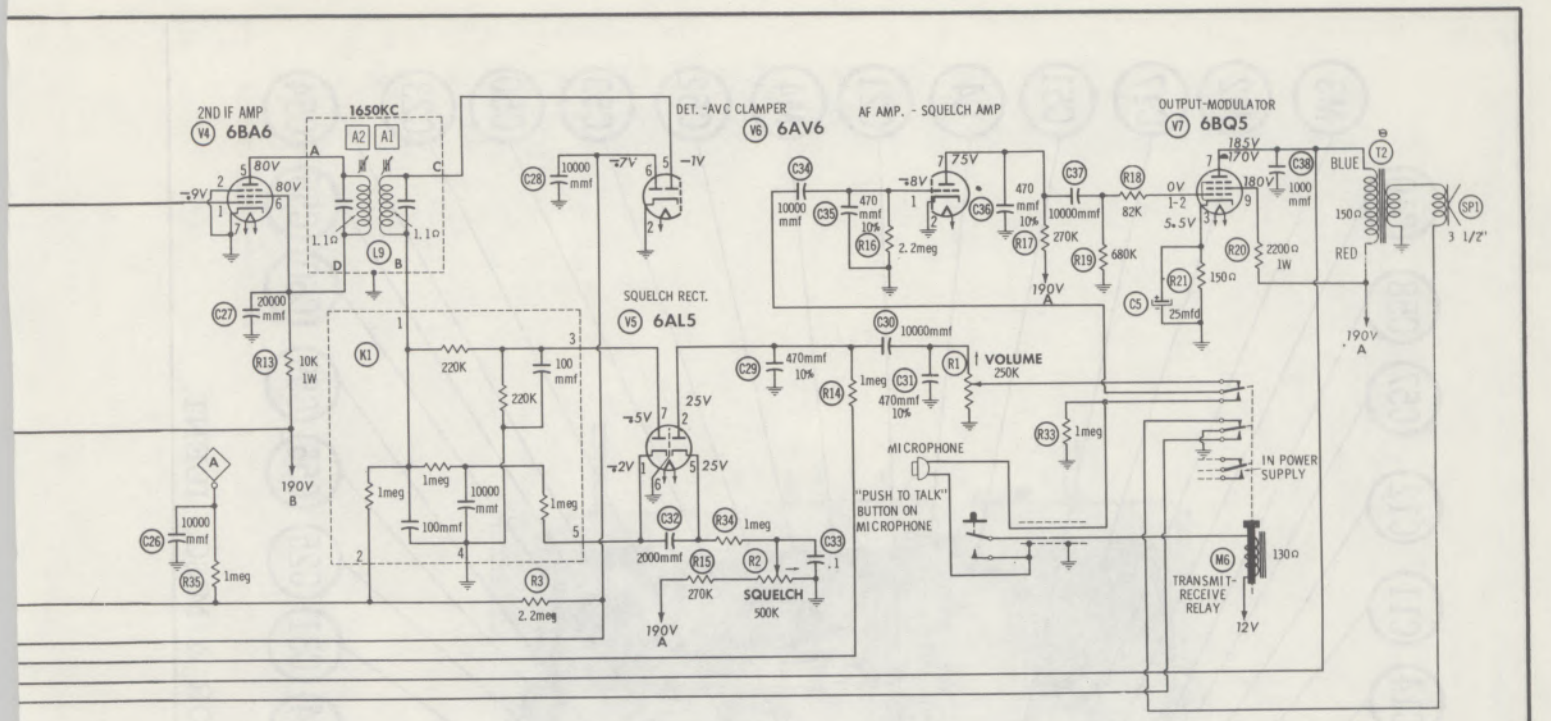

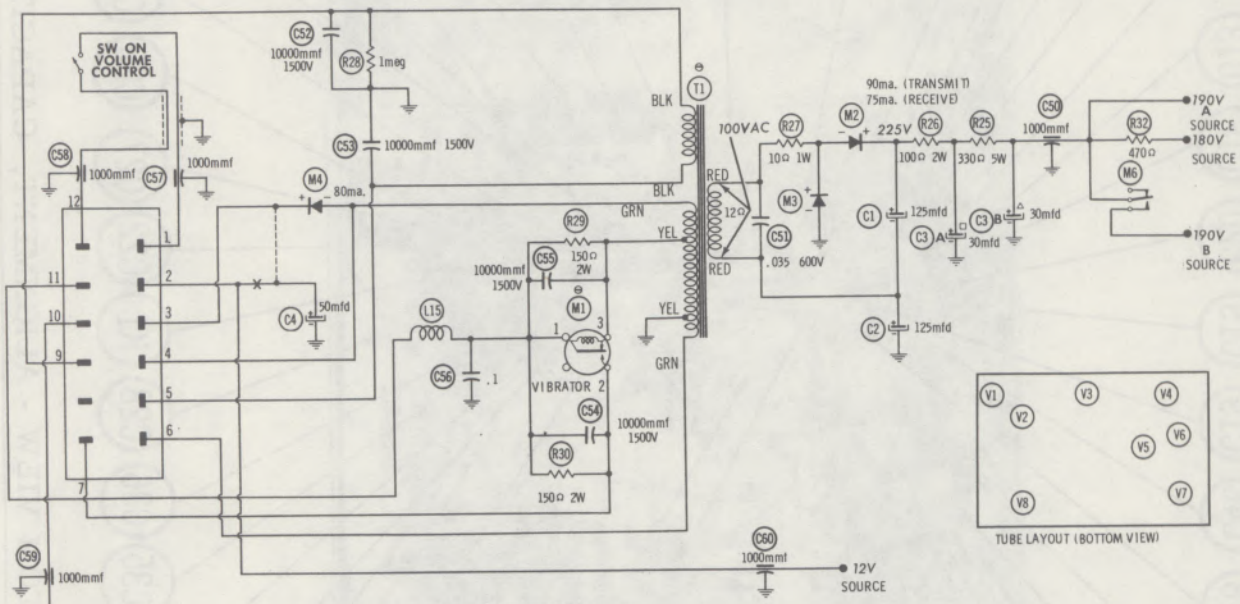

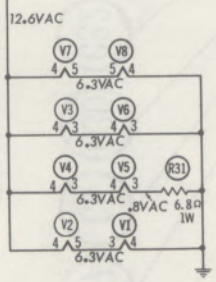

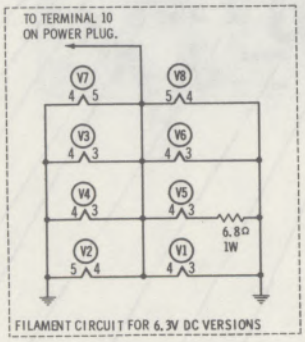

⊖ SEE PARTS LIST FOR ALTERNATE VALUE OR APPLICATION

DC COIL RESISTANCE VALUES UNDER ONE OHM NOT SHOWN ON SCHEMATIC DIAGRAM

ARROWS ON CONTROLS INDICATE CLOCKWISE ROTATION (CONTROL VIEWED FROM SHAFT END)

NUMBERS ASSIGNED TO COILS, SWITCHES, PLUGS, SOCKETS, AND TRANSFORMERS ARE TO FACILITATE CIRCUIT TRACING OR COMPONENT REPLACEMENT AND MAY NOT NECESSARILY BE FOUND ON THE UNIT.

1. DC voltage measurements taken with vacuum tube voltmeter; AC voltages measured with 1000 ohm per volt voltmeter.
2. Socket connections are shown as bottom views.
3. Measured values are from socket pin to common ground.
4. Line voltage maintained at 117 volts for voltage readings.
5. Nominal tolerance of component values makes possible a variation of ±15% in voltage and resistance readings.
6. All controls at minimum, proper output load connected.

GONSET MODEL G-12 (3316) (3329)

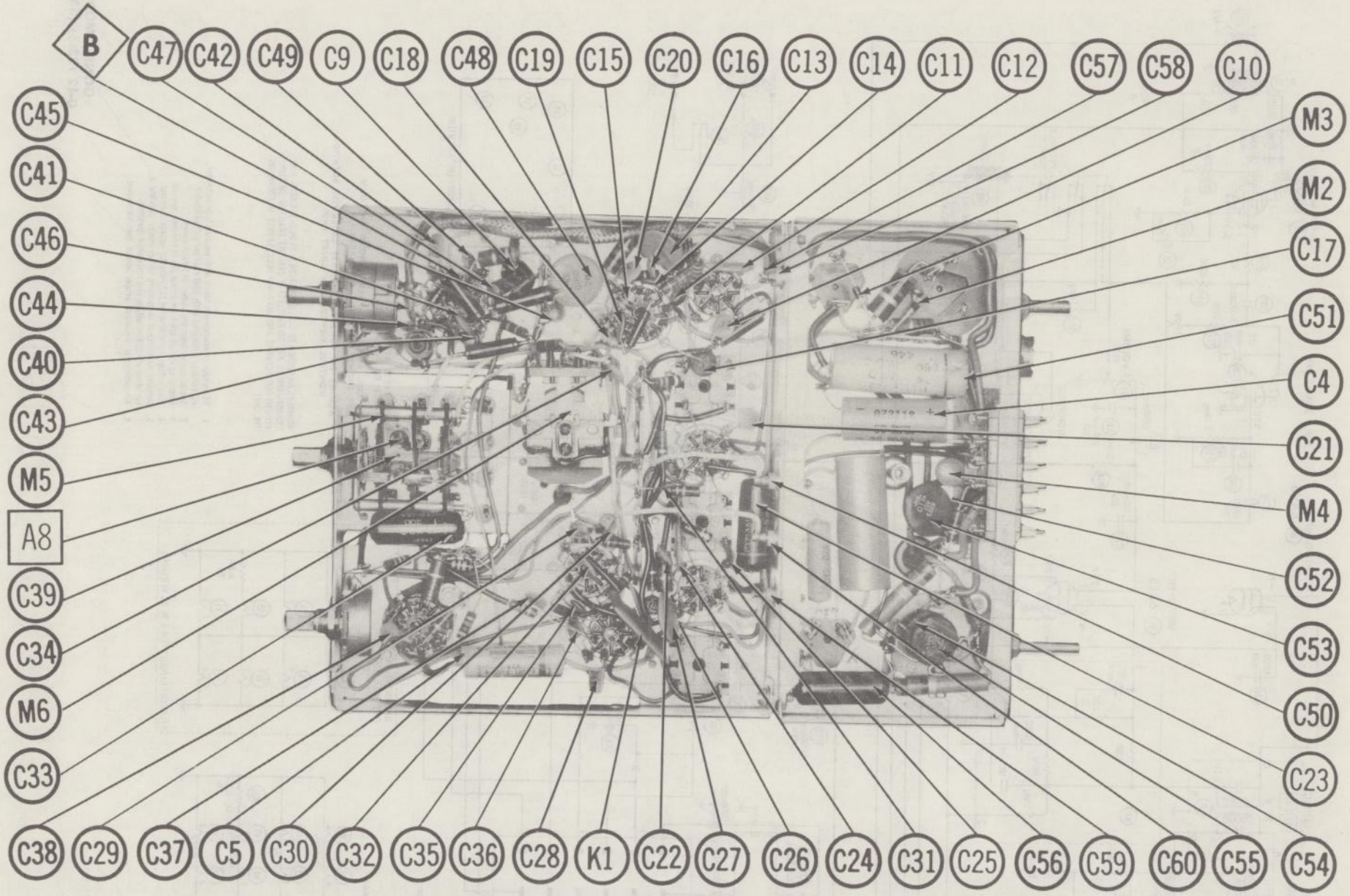

CHASSIS BOTTOM VIEW - ALIGNMENT, CAPACITOR & MISC. IDENT.

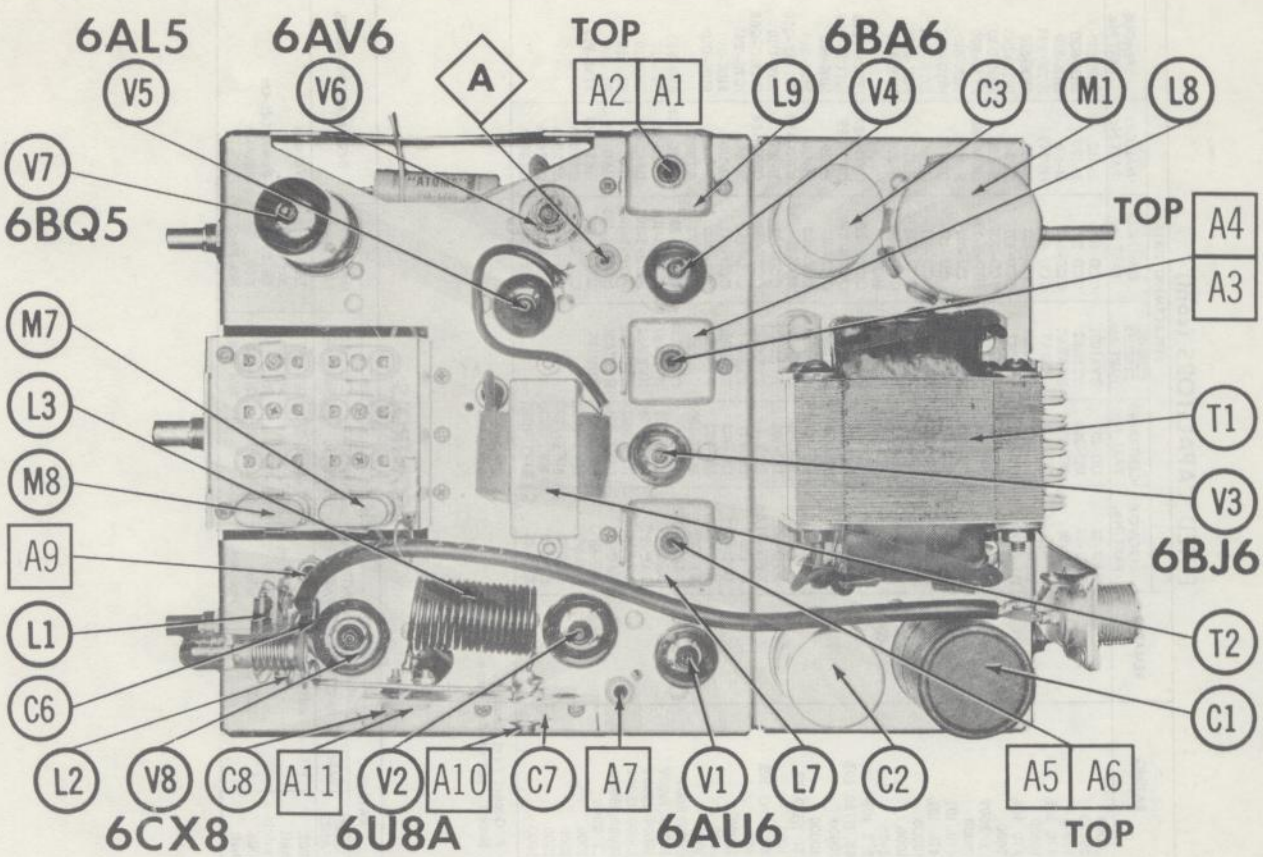

CHASSIS - TOP VIEW

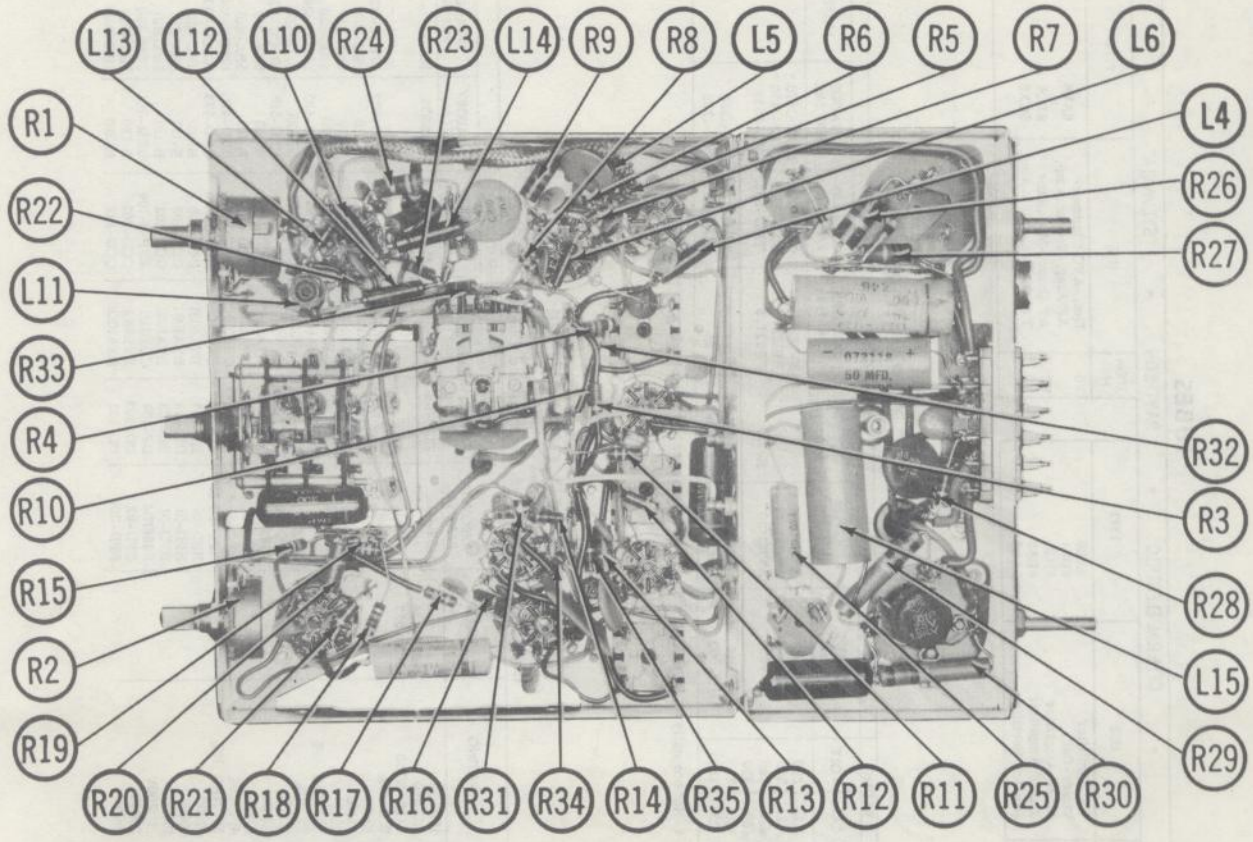

CHASSIS BOTTOM VIEW - RESISTOR & INDUCTOR IDENT.

PARTS LIST AND DESCRIPTIONS

TUBES

ITEM No.	USE	TYPE (GENERAL ELECTRIC / RAYTHEON / SYLVANIA)
V1	RF Amplifier	6AU6
V2	Mixer-Osc.	6U8A
V3	1st IF Amplifier	6BJ6
V4	2nd IF Amplifier	6BA6
V5	Squelch Rectifier	6AL5
V6	Det. -AVC Clamper- AF Amp. -Speech Amp.	6AV6
V7	AF Output-Modulator	6BQ5
V8	Trans. Osc. -Final Amp.	6CX8

ELECTROLYTIC CAPACITORS

ITEM No.	RATING CAP.	RATING VOLT.	GONSET PART No.	AEROVOX PART No.	CORNELL-DUBILIER PART No.	MALLORY PART No.	PYRAMID PART No.	SPRAGUE PART No.	NOTES
C1	125	200	073-018	AFHS1-22		FP122	TMS-1250	TVLS-1470 *	
C2	125	200	073-019	AFHS1-22		FP122	TMS-1250	TVLS-1470 *	
C3A	■30	350	073-026	AFH2-39	B0310	FP227.3	TMD-2385	TVL-2628	
B	▲30	350							
C4	50	25	073-118	PRS1265	BBR50-25	TC29	TD-50-25	TVA-1206	
C5	25	25	073-002	PRS1260	BBR25-25	TC26	TD-25-25	TVA-1205	

* Not normally in distributor's stock. Available thru distributor on order to manufacturer

FIXED CAPACITORS

Capacity values given in the rating column are in mfd. for Paper Capacitors, and in mmfd. for Mica and Ceramic Capacitors.

ITEM No.	RATING	REMARKS	AEROVOX PART No.	CENTRALAB PART No.	CORNELL-DUBILIER PART No.	ELMENCO PART No.	MALLORY PART No.	SPRAGUE PART No.
C6	100 5%		1469-0001	TCZ-100	22R5T1	CM-19B-101J	MCE235	MS-31
C7	110-580	#089-024						
C8	5-30 N750	#089-033						
C9	2.2 10%		NPO-SI 2.2	TCZ-2R2	C10V22C	CCTO-2R2	CNO-522	10TCC-V22
C10	10000		BPD-01	DD-103	BYA10S1	CCD-103	B-110	5HK-S10
C11	10000		BPD-01	DD-103	BYA10S1	CCD-103	B-110	5HK-S10
C12	20000		BPD-02	DD-203	BYB6S2	CCD-203	B-120	5HK-S20
C13	82 NPO 10%			DTZ-82	C10Q82C	CCTO-820	CNO-482	10TCC-Q82
C14	27 10%		DI-27	DD-270	L10Q27	CCD-270	GP427	10TS-Q27
C15	1 10%		NPO-SI 1.0	TCZ-1			CNO-510	10TCC-V10
C16	10000		BPD-01	DD-103	BYA10S1	CCD-103	B-110	5HK-S10
C17	10000	Note 1	BPD-01	DD-103	BYA10S1	CCD-103	B-110	5HK-S10
C18	4.7 10%		NPO-SI 4.7	TCZ-4R7	C10V47C	CCTO-4R7	CNO-4R7	10TCC-V47
C19	30 NPO 10%		NPO-DI 33	TCZ-30	C10Q3C	CCTO-300	CNO-433	10TCC-Q30
C20	10000		BPD-01	DD-103	BYA10S1	CCD-103	B-110	5HK-S10
C21	10000		BPD-01	DD-103	BYA10S1	CCD-103	B-110	5HK-S10
C22	10000		BPD-01	DD-103	BYA10S1	CCD-103	B-110	5HK-S10
C23	.1 200V		P288N-1	DF-104	CUB2P1	2DP-3-104	GEM-201	2TM-P10
C24	20000		BPD-02	DD-203	BYB6S2	CCD-203	B-120	5HK-S20
C25	1000		BPD-001	DD-102	BYA10D1	CCD-102	B-210	5HK-D10

FIXED CAPACITORS (cont)

ITEM No.	RATING	REMARKS	AEROVOX PART No.	CENTRALAB PART No.	CORNELL-DUBILIER PART No.	ELMENCO PART No.	MALLORY PART No.	SPRAGUE PART No.
C26	10000		BPD-01	DD-103	BYA10S1	CCD-103	B-110	5HK-S10
C27	20000		BPD-02	DD-203	BYB6S2	CCD-203	B-120	5HK-S20
C28	10000		BPD-01	DD-103	BYA10S1	CCD-103	B-110	5HK-S10
C29	470 10%		DI-470	DD-471	5R5T47	CCD-471	GP347	10TS-T47
C30	10000		BPD-01	DD-103	BYA10S1	CCD-103	B-110	5HK-S10
C31	470 10%		DI-470	DD-471	5R5T47	CCD-471	GP347	10TS-T47
C32	2000		BPD-002	DD-202	BYA10D2	CCD-202	B-220	5HK-D20
C33	.1 200V		P288N-1	DF-104	CUB2P1	2DP-3-104	GEM-201	2TM-P10
C34	10000		BPD-01	DD-103	BYA10S1	CCD-103	B-110	5HK-S10
C35	470 10%		DI-470	DD-471	5R5T47	CCD-471	GP347	10TS-T47
C36	470 10%		DI-470	DD-471	5R5T47	CCD-471	GP347	10TS-T47
C37	10000		BPD-01	DD-103	BYA10S1	CCD-103	B-110	5HK-S10
C38	1000		BPD-001	DD-102	BYA10D1	CCD-102	B-210	5HK-D10
C39	3-35	#089-006				403		
C40	2.2 10%		NPO-SI 2.2	TCZ-2R2	C10V22C	CCTO-2R2	CNO-522	10TCC-V22
C41	68 N750 10%		N750-DI 68	TCN-68	C10Q68U	CCTN-680	CN7-468	10TCU-Q68
C42	10000		BPD-01	DD-103	BYA10S1	CCD-103	B-110	5HK-S10
C43	10000		BPD-01	DD-103	BYA10S1	CCD-103	B-110	5HK-S10
C44	51 NPO 5%			TCZ-51	C10Q51C	CM-19B-510J	CNO-450	10TCC-Q50
C45	1000		BPD-001	DD-102	BYA10D1	CCD-102	B-210	5HK-D10
C46	68 NPO 10%		NPO-DI 68	DTZ-68	C10Q68C	CCTO-680	CNO-468	10TCC-Q68
C47	470		SI 470	D6-471	BYA10T47	CCD-471	B-347	10TS-T47
C48	10000		BPD-01	DD-103	BYA10S1	CCD-103	B-110	5HK-S10
C49	1000		BPD-001	DD-102	BYA10D1	CCD-102	B-102	5HK-D10
C50	1000		EF-001	MFT-1000		CCF-102	CT280A	
C51	.035 600V		P688N-033		CUB6S33	6DP-3-333	GEM-6133	6PS-S35
C52	10000 1500V		DAC-27	DD16-103	HVE16S1	16DP-3-103	UAC-110	BL-S10
C53	10000 1500V		DAC-27	DD16-103	HVE16S1	16DP-3-103	UAC-110	BL-S10
C54	10000 1500V		DAC-27	DD16-103	HVE16S1	16DP-3-103	UAC-110	BL-S10
C55	10000 1500V		DAC-27	DD16-103	HVE16S1	16DP-3-103	UAC-110	BL-S10
C56	.1 200V		P288N-1	DF-104	CUB2P1	2DP-3-104	GEM-201	2TM-P10
C57	1000		EF-001	MFT-1000		CCF-102	CT280A	
C58	1000		EF-001	MFT-1000		CCF-102	CT280A	
C59	1000		EF-001	MFT-1000		CCF-102	CT280A	
C60	1000		EF-001	MFT-1000		CCF-102	CT280A	

\# Gonset Part Number.
Note 1. Not used in some versions.

CONTROLS

ITEM No.	RATING RESISTANCE	RATING WATTS	GONSET PART No.	CENTRALAB PART No.	CLAROSTAT PART No.	CTS-IRC PART No.	MALLORY PART No.	INSTALLATION NOTES
R1A	250K	½	052-081	B-51	A47-250K-Z	Q13-130	U44	Volume
B	Shaft			Not Req.	FS-3	Not Req.	Not Req.	
C	Switch			KR-1	SWE-12	76-1	US-26	Power Off-On
R2A	500K	½	052-082	B-59	A47-500K-S	Q11-133	U50	Squelch
B	Shaft			Not Req.	FS-3	Not Req.	Not Req.	

PARTS LIST AND DESCRIPTIONS (Continued)

RESISTORS

All wattages 1/2 watt, or less, unless otherwise listed.

ITEM No.	RATING	REPLACEMENT DATA		
		IRC PART No.	WORKMAN TV PART No.	REMARKS
R3	2.2meg			
R4	91meg			
R5	47K			
R6	1meg			
R7	68K			
R8	100K			
R9	10K 1W			
R10	2.2meg			
R11	100K			
R12	220K			
R13	10K 1W			
R14	1meg			
R15	270K			
R16	2.2meg			
R17	270K			
R18	82K			
R19	680K			

ITEM No.	RATING	REPLACEMENT DATA		
		IRC PART No.	WORKMAN TV PART No.	REMARKS
R20	2200Ω 1W			
R21	150Ω			
R22	47K			
R23	2700Ω			
R24	6800Ω 1W			
R25	330Ω 5W	PW5-330	5W-SQ-330	
R26	100Ω 2W			
R27	10Ω 1W			
R28	1meg			
R29	150Ω 2W			
R30	150Ω 2W			
R31	6.8Ω 1W			
R32	470Ω			
R33	1meg			
R34	1meg			
R35	1meg			

COMPONENT COMBINATIONS

ITEM No.	USE	DESCRIPTION	GONSET PART No.	REPLACEMENT DATA
K1	Noise Clipper Network	(2) 100mmf, 10000mmf, (2) 220K, (3) 1 meg	069-003	

COILS (RF-IF)

ITEM No.	USE	REPLACEMENT DATA				NOTES
		GONSET PART No.	Merit PART No.	Miller PART No.	Stancor PART No.	
L1	RF Choke(.56uh)	027-077	BC-560	4588	RTC-8513	
L2	Output Indicator	011-118				
L3	RF Choke	011-120				
L4	RF Choke(5.6uh)	027 028	BC-565	4609	RTC-8519	
L5	RF	012-414	TV-118	6171-A	RTC-8609	
L6	RF Choke(5.4uh)	027-004	SW-631	4609	RTC-8519	
L7	1st IF	014-030				
L8	2nd IF	014-030				
L9	3rd IF	014-030				
L10	RF Choke(5.6uh)	027-028	BC-565	4609	RTC-8519	
L11	Osc. Plate	012-415	TV-118	6171-A	RTC-8609	
L12	RF Choke(5.6uh)	027-028	BC-565	4609	RTC-8519	
L13	RF Choke (.47uh)	027-073		4588	RTC-8513	
L14	RF Choke(15uh)	027-032		4624	RTC-8524	
L15	Hash Choke(4uh)	027-010	BC-537	5219	RTC-9181	

TRANSFORMER (POWER)

ITEM No.	RATING			REPLACEMENT DATA					NOTES
	PRI.	SEC. 1	SEC. 2	GONSET PART No.	Merit PART No.	Stancor PART No.	Thordarson PART No.	Triad PART No.	
T1	117V ⓐ .5A (AC Only)	100V ⓐ .300A	12.6V ⓐ 2A *	271-068 ①					① Part #271-071 used in 6-volt DC versions. * AC operation filament supply. Part of primary when used for DC operation.

TRANSFORMER (AUDIO OUTPUT)

ITEM No.	IMPEDANCE		REPLACEMENT DATA					NOTES
	PRI.	SEC.	GONSET PART No.	Merit PART No.	Stancor PART No.	Thordarson PART No.	Triad PART No.	
T2	2700Ω	3-4Ω	272-004 ①					① Alternate Part #272-034.

SPEAKER

ITEM No.	TYPE			REPLACEMENT DATA		NOTES
	SIZE	FIELD	V. C. IMP.	GONSET PART No.	QUAM PART No.	
SP1	3½"	PM	3-4Ω	152-016	3A070T	

VIBRATOR

ITEM No.	TYPE	INPUT VOLTS	FRE-QUENCY	REPLACEMENT DATA				NOTES
				GONSET PART No.	CORNELL-DUBILIER PART No.	MALLORY PART No.	RADIART PART No.	
M1	Interrupter	12V	115∿	117-003	6301	G1601	6301	12 Volt Versions
	Interrupter	6V	115∿	117-008	5301	1601	5301	6 Volt Versions

POWER RECTIFIERS

ITEM No.	RATING	REPLACEMENT DATA				NOTES
	CURRENT (Measured)	GONSET PART No.	RCA PART No.	SARKES TARZIAN PART No.	SYLVANIA PART No.	
M2	.090A	474-012	1N1763 *	40H *	SR500 *	* Silicon Type
M3	.090A	474-012	1N1763 *	40H *	SR500 *	
M4	.070A	474-004	1N1763*	40H *	SR500 *	

MISCELLANEOUS

ITEM No.	PART NAME	GONSET PART No.	NOTES
M5	Switch	171-096	Channel Selector (Rotary Wafer Type)
M6	Relay	111-091	AC-12VDC Versions
	Relay	111-090	AC-6VDC Versions
	Microphone	113-015A	
M7	Crystal		Receive
M8	Crystal		Transmit

FUSES

ITEM No.	TYPE	RATING	REPLACEMENT DATA					
			GONSET PART No.		LITTELFUSE PART No.		BUSS PART No.	
			FUSE	HOLDER	FUSE	HOLDER	FUSE	HOLDER
	3AG	1A ① 250V			312001 (1A 250V)		AGC 1	
	3AG	1A ① 250V			312001 (1A 250V)		AGC 1	
		7A 32V ②			307007 (7A 32V)		SFE 7	
		20A 32V ③			3110202 (30A 32V)		SFE 20	

① 117 VAC Operation. ② 12VDC Operation. ③ 6VDC Operation.

CABINETS & CABINET PARTS

(When Ordering Cabinets & Cabinet Parts, Specify Model, Chassis & Color)

NAME	PART NO.	DESCRIPTION
Knob	211-017	Channel Selector
Knob	211-016	Volume, Squelch
Cabinet	465-066	

WIRING DATA

General-use Unshielded Hook-up Wire ..... Use BELDEN No. 8530 (Solid) Available in Ten Colors
8524 (Stranded) Available in Ten Colors

Power Cord ..... Use BELDEN No. 1765-B (6 Ft. Length)
1725-K (7½ Ft. Length)

PHOTOFACT® Folder

HALLICRAFTERS MODEL CB-1

HALLICRAFTERS MODEL CB-1

TRADE NAME	Hallicrafters Model CB-1
MANUFACTURER	The Hallicrafters Co., 4400W, 45th Street, Chicago 32, Illinois
TYPE SET	AC Operated Crystal Controlled 11 Tube Citizens Band Transmitter-Receiver
POWER SUPPLY	105 – 125 Volts AC, 60 Cycles RATING 60 Watts, .56 Amp. @117 Volts AC
TUNING RANGE	Any one of Citizens Band Channels 1 thru 22

NOTICE

ONLY THOSE PERSONS PROPERLY LICENSED BY FCC ARE PERMITTED TO EFFECT REPAIRS OR MAKE CRYSTAL SUBSTITUTIONS ON THIS TYPE EQUIPMENT.

HOWARD W. SAMS & CO., INC. Indianapolis 6, Indiana

KZ384

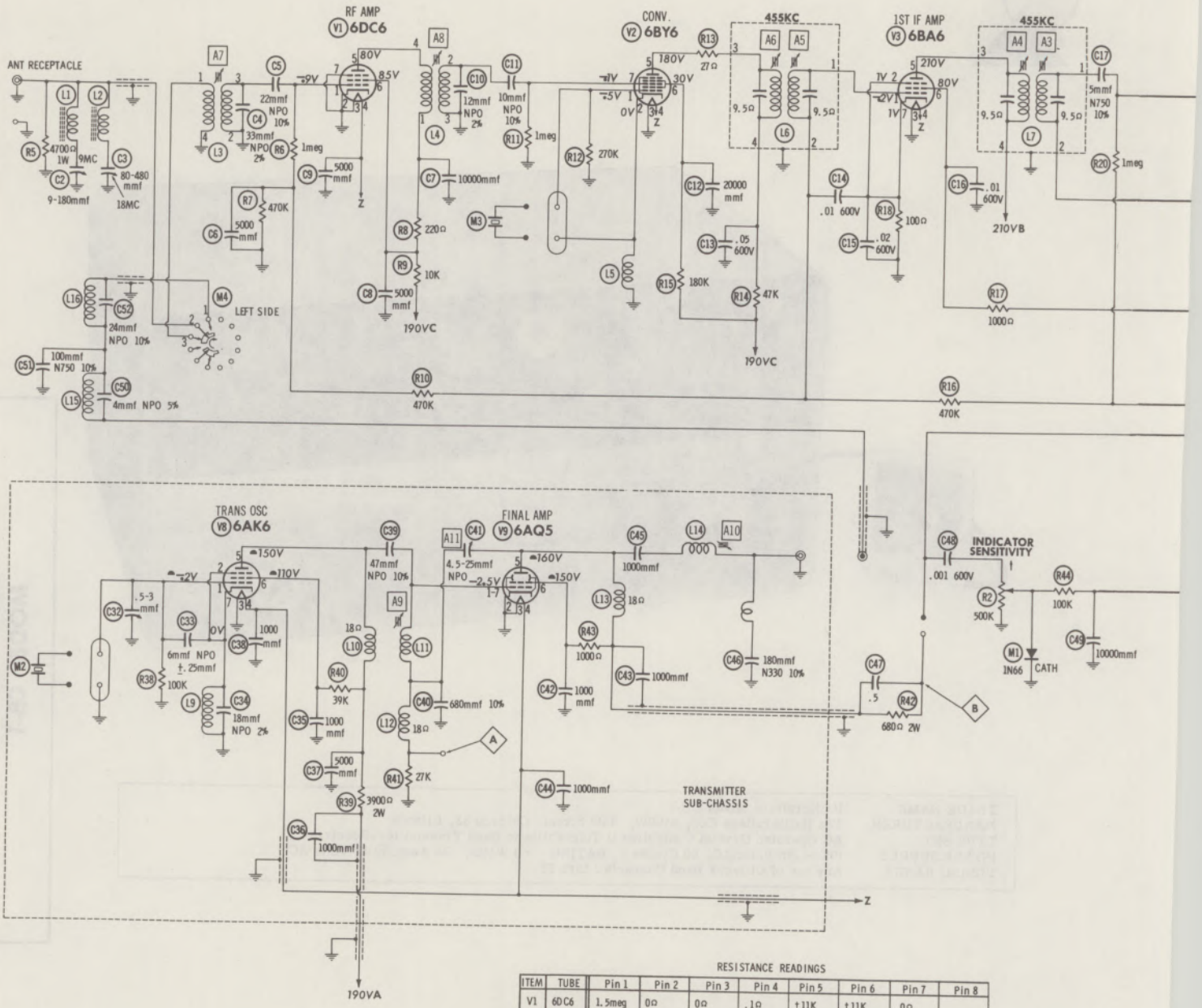

RESISTANCE READINGS

ITEM	TUBE	Pin 1	Pin 2	Pin 3	Pin 4	Pin 5	Pin 6	Pin 7	Pin 8
V1	6DC6	1.5meg	0Ω	0Ω	.1Ω	†11K	†11K	0Ω	
V2	6BY6	270K	0Ω	0Ω	.1Ω	†48K	†180K	1meg	
V3	6BA6	1meg	100Ω	0Ω	.1Ω	†330Ω	†24K	100Ω	
V4	6BA6	2meg	100Ω	0Ω	.1Ω	†1300Ω	†23K	100Ω	
V5	6AL5	800K	420K	.8Ω	0Ω	●75Ω	0Ω	270K	
V6	6SC7	TP	†220K	15meg	2.2meg	†28K	0Ω	0Ω	.1Ω
V7	6K6GT	TP	0Ω	†680Ω	†330Ω	470K	TP	.1Ω	980Ω
V8	6AK6	100K	0Ω	0Ω	.1Ω	⁻†5200Ω	⁻†44K	0Ω	
V9	6AQ5A	27K	0Ω	0Ω	.1Ω	⁻†1375Ω	⁻†2350Ω	27K	
V10	6E5	.1Ω	⁻†1meg	100K	⁻†330Ω	0Ω	0Ω		
V11	5Y3GT	TP	¶	TP	105Ω	TP	115Ω	TP	¶

ALL MEASUREMENTS MADE IN "RECEIVE" POSITION UNLESS OTHERWISE DESIGNATED.
¶ THIS READING WILL VARY DEPENDING UPON THE CONDITION OF THE ELECTROLYTIC IN THE CIRCUIT.
● THIS READING WILL VARY. CONTROL SET FOR NORMAL OPERATION.
⁻ MEASURED IN "TRANSMIT" POSITION.
† MEASURED FROM PIN 8 OF V11.

NC NO CONNECTION
TP TIE POINT

A PHOTOFACT STANDARD NOTATION SCHEMATIC

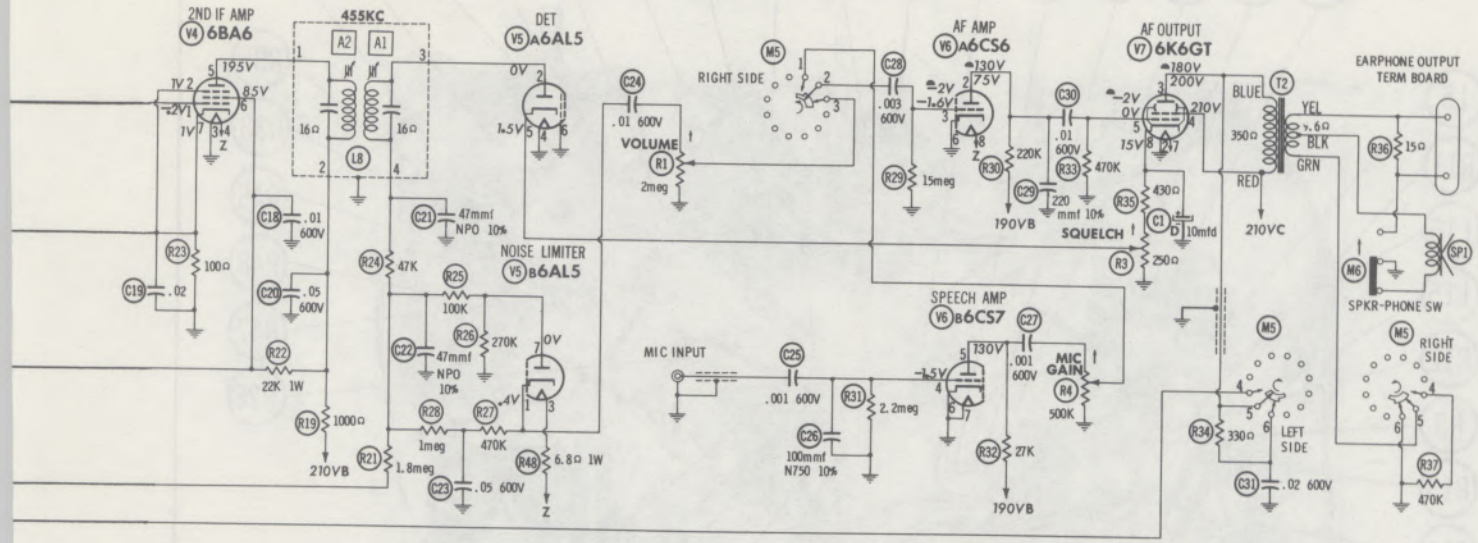

TRANSMIT-RECEIVE SW M4 & M5 SHOWN IN "RECEIVE" POSITION. SWITCHES ARE OPERATED SIMULTANEOUSLY BY ONE PUSH-BUTTON

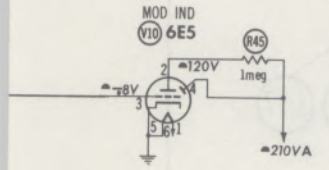

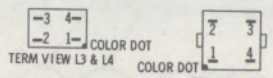

● SEE PARTS LIST FOR ALTERNATE VALUE OR APPLICATION

DC COIL RESISTANCE VALUES UNDER ONE OHM NOT SHOWN ON SCHEMATIC DIAGRAM

ARROWS ON CONTROLS INDICATE CLOCKWISE ROTATION (CONTROL VIEWED FROM SHAFT END)

NUMBERS ASSIGNED TO COILS, SWITCHES, PLUGS, SOCKETS, AND TRANSFORMERS ARE TO FACILITATE CIRCUIT TRACING OR COMPONENT REPLACEMENT AND MAY NOT NECESSARILY BE FOUND ON THE UNIT.

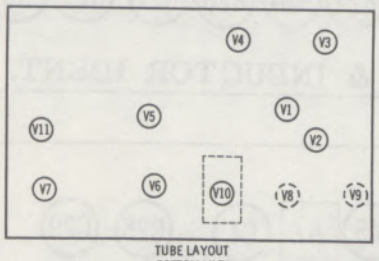

TUBE LAYOUT
BOTTOM VIEW

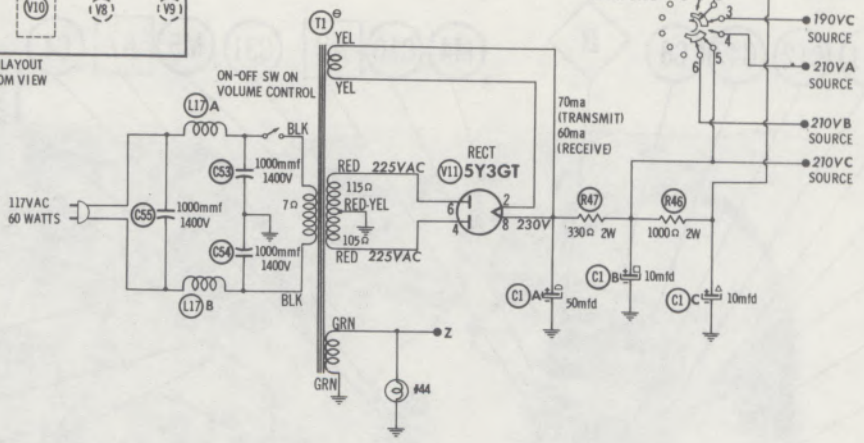

1. DC voltage measurements taken with vacuum tube voltmeter; AC voltages measured with 1000 ohm per volt voltmeter.
2. Socket connections are shown as bottom views.
3. Measured values are from socket pin to common ground.
4. Line voltage maintained at 117 volts for voltage readings.
5. Nominal tolerance on component values makes possible a variation of ±15% in voltage and resistance readings.
6. Volume control at maximum, no signal applied for voltage measurements.

HALLICRAFTERS MODEL CB-1

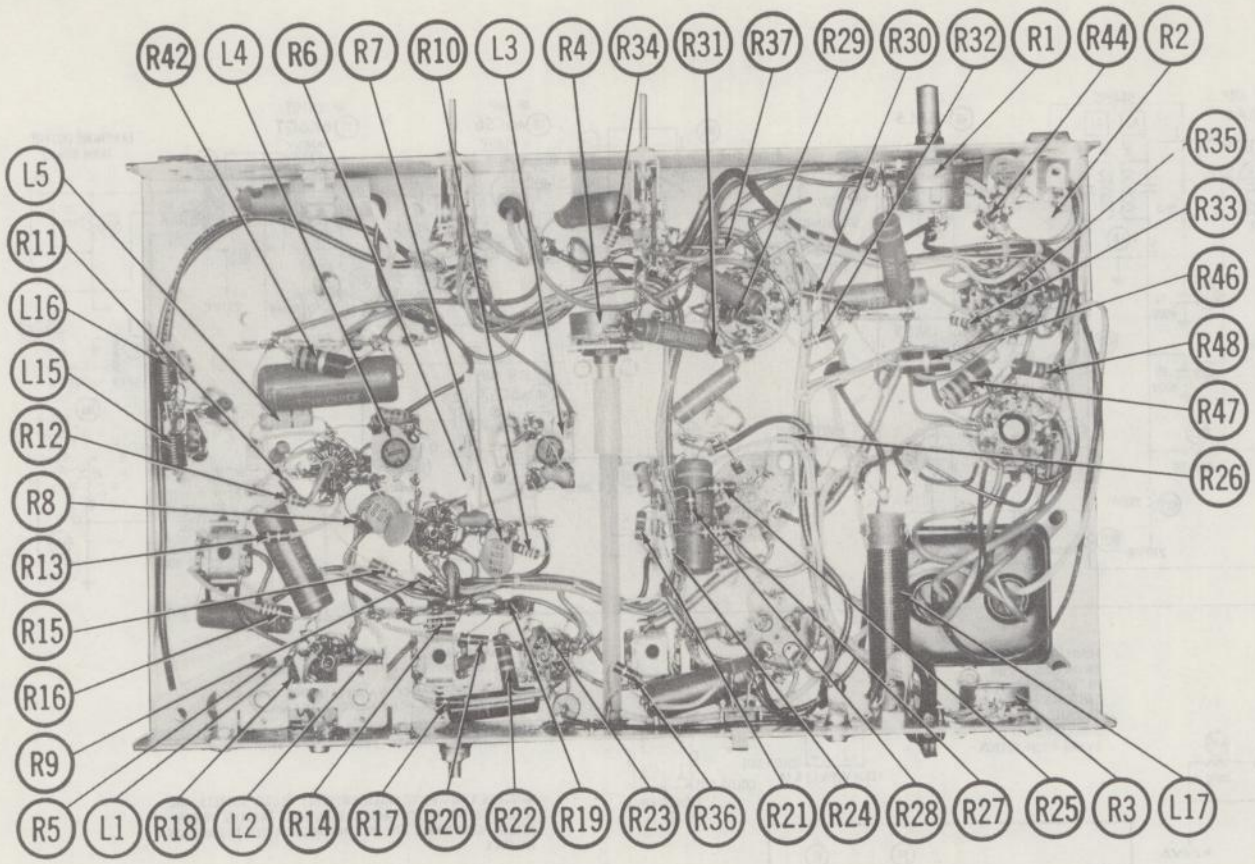

CHASSIS BOTTOM VIEW-RESISTOR & INDUCTOR IDENT.

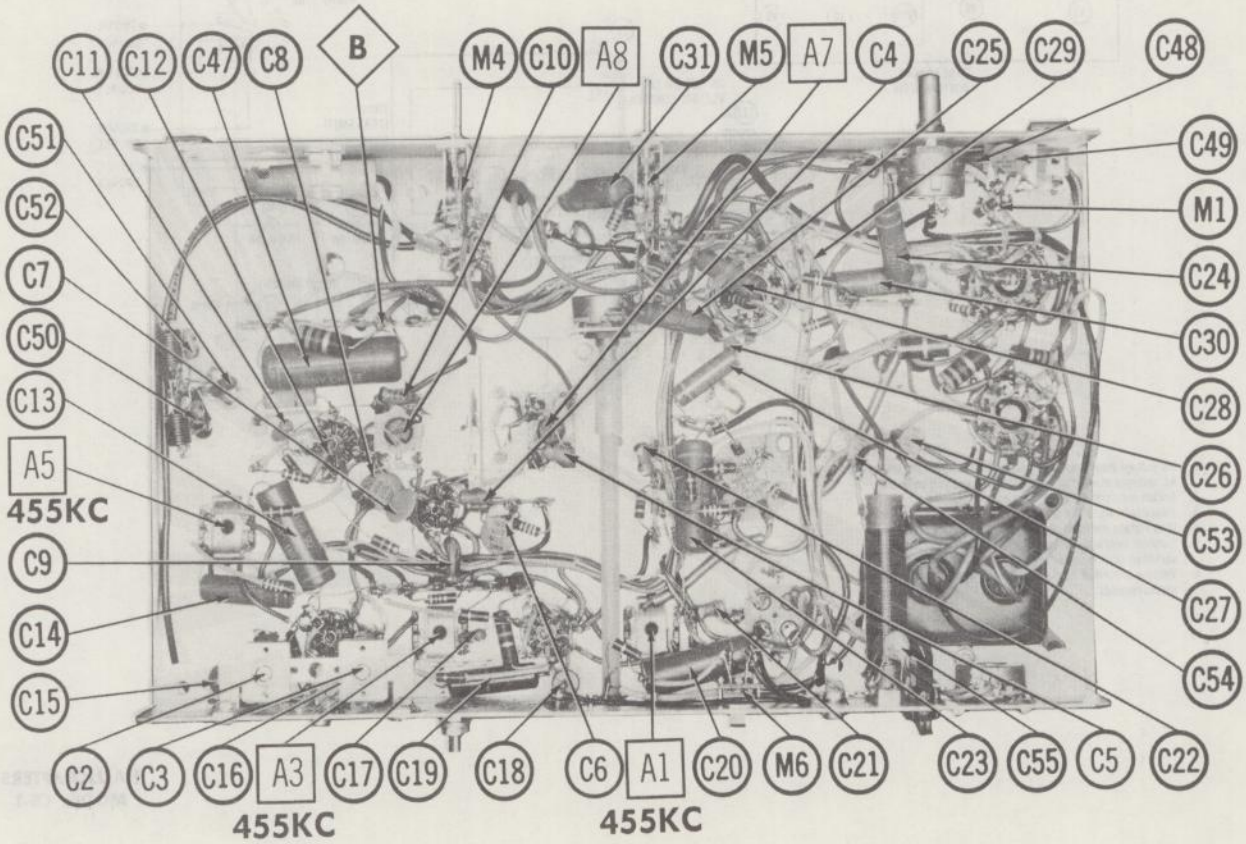

CHASSIS BOTTOM VIEW-ALIGNMENT, CAPACITOR & MISC. IDENT.

PARTS LIST AND DESCRIPTIONS

WIRING DATA

General-use Unshielded Hook-up Wire ..... Use BELDEN No. 8530 (Solid) Available in Ten Colors
8524 (Stranded) Available in Ten Colors

Power Cord ..... Use BELDEN No. 1765-B (6 Ft. Length)
1725-K (7½ Ft. Length)

TUBES

ITEM No.	USE	TYPE	ITEM No.	USE	TYPE
	◆ GENERAL ELECTRIC ◆			RAYTHEON ◆ SYLVANIA ◆	
V1	RF Amplifier	6DC6	V7	AF Output-Modulator	6K6GT
V2	Converter	6BY6	V8	Trans. Oscillator	6AK6
V3	1st IF Amplifier	6BA6	V9	Final Amplifier	6AQ5A
V4	2nd IF Amplifier	6BA6	V10	Mod. Indicator	6E5
V5	Det. -Noise Limiter	6AL5	V11	Rectifier	5Y3GT
V6	AF Amp. -Speech Amp.	6SC7			

ELECTROLYTIC CAPACITORS

ITEM No.	RATING CAP.	RATING VOLT.	REPLACEMENT DATA Hallicrafters PART No.	AEROVOX PART No.	CORNELL-DUBILIER PART No.	MALLORY PART No.	PYRAMID PART No.	SPRAGUE PART No.	NOTES
C1A	▲50	350	045-200122	AFH4-17	D0160	FP475.5	TMQ-4634	TVL-4771.3	
B	■10	350							
C	▲10	350							
D	10	25							

FIXED CAPACITORS

Capacity values given in the rating column are in mfd. for Paper Capacitors, and in mmfd. for Mica and Ceramic Capacitors.

ITEM No.	RATING	REMARKS	REPLACEMENT DATA AEROVOX PART No.	CENTRALAB PART No.	CORNELL-DUBILIER PART No.	ELMENCO PART No.	MALLORY PART No.	SPRAGUE PART No.
C2	9-180	#044-300517				463		
C3	80-480					466		
C4	33 NPO 2%			TCZ-33		CM-20C-330G		
C5	22 NPO 10%		NPO-SI 22	TCZ-22	C10Q22C	CCTO-220	CNO-422	10TCC-Q22
C6	5000		BPD-005	DD-502	BYA10D5	CCD-502	B-250	5HK-D50
C7	10000		BPD-01	DD-103	BYA10S1	CCD-103	B-110	5HK-S10
C8	5000		BPD-005	DD-502	BYA10D5	CCD-502	B-250	5HK-D50
C9	5000		BPD-005	DD-502	BYA10D5	CCD-502	B-250	5HK-D50
C10	12 NPO 2%	#491-104120-22		TCZ-12				
C11	10 NPO 10%		NPO-SI 10	DTZ-10	C10Q1C	CCTO-100K	CNO-410	10TCC-Q10
C12	20000		BPD-02	DD-203	BYB6S2	CCD-203	B-120	5HK-S20
C13	.05 600V		P688N-05	DD-503	CUB6S5	6DP-3-503	GEM-615	6TM-S50
C14	.01 600V		P688N-01	D6-103	CUB6S1	6DP-1-103	GEM-611	6TM-S10
C15	.02 600V		P688N-02	DD-203	CUB6S2	6DP-2-203	GEM-612	6TM-S20
C16	.01 600V		P688N-01	D6-103	CUB6S1	6DP-2-103	GEM-611	6TM-S10
C17	5 N750 10%		N750-SI 5	TCN-5	C10V5U	CCTN-050	CN7-550	10TCU-V50
C18	.01 600V		P688N-01	D6-103	CUB6S1	6DP-2-103	GEM-611	6TM-S10
C19	.02 200V		P288N-02	DD-203	CUB2S2	4DP-2-203	GEM-412	2TM-S20
C20	.05 600V		P688N-05	DD-503	CUB6S5	6DP-3-503	GEM-615	6TM-S50
C21	47 NPO 10%		NPO-SI 47	TCZ-47	C10Q47C	CCTO-470	CNO-447	10TCC-Q47
C22	47 NPO 10%		NPO-SI 47	TCZ-47	C10Q47C	CCTO-470	CNO-447	10TCC-Q47
C23	.05 600V		P688N-05	DD-503	CUB6S5	6DP-3-503	GEM-615	6TM-S50
C24	.01 600V		P688N-01	D6-103	CUB6S1	6DP-2-103	GEM-611	6TM-S10
C25	.001 600V		P688N-001	D6-102	CUB6D1	6DP-1-102	GEM-621	6TM-D10
C26	100 N750 10%		N750-SI 100	TCN-100	C10T1U	CCTN-101	CN7-310	10TCU-T10
C27	.001 600V		P688N-001	D6-102	CUB6D1	6DP-1-102	GEM-621	6TM-D10
C28	.003 600V		P688N-003	D6-302	CUB6D3	6DP-1-302	GEM-623	6TM-D30
C29	220 10%		1469-00022	TCZ-220	22R5T22	CM-19B-221K	CNO-322	MS-322
C30	.01 600V		P688N-01	D6-103	CUB6S1	6DP-2-103	GEM-611	6TM-S10
C31	.02 600V		P688N-02	DD-203	CUB6S2	6DP-2-203	GEM-612	6TM-S20
C32	.5-3			829-3		CV-1	CT565	

TRANSMITTER SUB CHASSIS

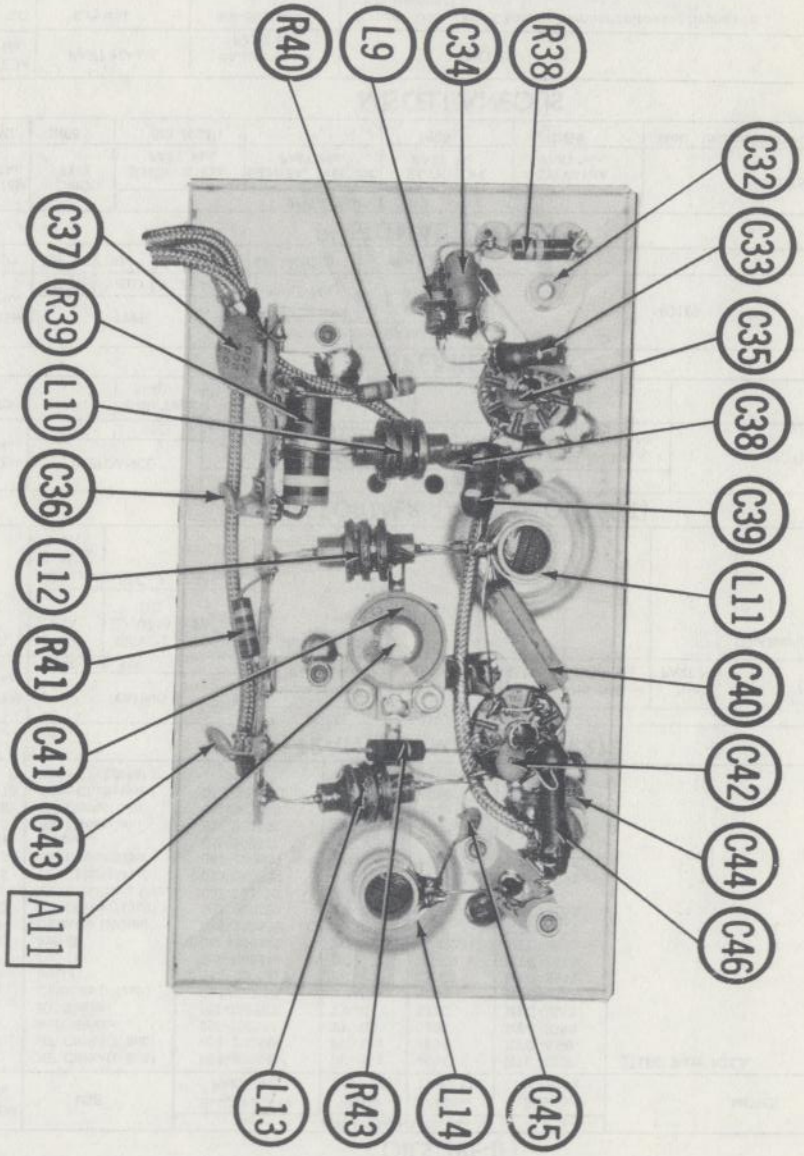

PARTS LIST AND DESCRIPTIONS (Continued)

FIXED CAPACITORS (cont)

ITEM No.	RATING	REMARKS	REPLACEMENT DATA					
			AEROVOX PART No.	CENTRALAB PART No.	CORNELL-DUBILIER PART No.	ELMENCO PART No.	MALLORY PART No.	SPRAGUE PART No.
C33	6 NPO ± .25mmf	#491-101060-23			C10V6C			
C34	18 NPO 2%	#491-104180-22		TCZ-18				
C35	1000		BPD-001	DD-102	BYA10D1	CCD-102	B-210	5HK-D10
C36	1000		BPD-001	DD-102	BYA10D1	CCD-102	B-210	5HK-D10
C37	5000		BPD-005	DD-502	BYA10D5	CCD-502	B-250	5HK-D50
C38	1000		BPD-001	DD-102	BYA10D1	CCD-102	B-210	5HK-D10
C39	47 NPO 10%		NPO-SI 47	TCZ-47	C10Q47C	CCTO-470	CNO-447	10TCC-Q47
C40	680 10%		1469-00068		5R5T68	CM-19B-681K	MCJ249	MS-368
C41	4.5-25 NPO	#044-100516		822-AZ				
C42	1000		BPD-001	DD-102	BYA10D1	CCD-102	B-210	5HK-D10
C43	1000		BPD-001	DD-102	BYA10D1	CCD-102	B-210	5HK-D10
C44	1000		BPD-001	DD-102	BYA10D1	CCD-102	B-210	5HK-D10
C45	1000		BPD-001	DD-102	BYA10D1	CCD-102	B-210	5HK-D10
C46	180 N330 10%	#491-156181-73				*		
C47	.5 200V		P288N-5		CUB2P5	2DP-5-504	GEM-205	2TM-P50
C48	.001 600V		P688N-001	D6-102	CUB6D1	6DP-1-102	GEM-621	6TM-D10
C49	10000		BPD-01	DD-103	BYA10S1	CCD-103	B-110	5HK-S10
C50	4 NPO 5%				C10V4C			10TCC-V39
C51	100 N750 10%		N750-SI 100	TCN-100	C10T1U	CCTN-101	CN7-310	10TCU-T10
C52	24 NPO 10%		NPO-SI 24	TCZ-24	C10Q24C		CNO-425	10TCC-Q25
C53	1000 1400V		DAC-2	DD30-102	HVB16D1	3CCD-102	UAC-210	BL-D10
C54	1000 1400V		DAC-2	DD30-102	HVB16D1	3CCD-102	UAC-210	BL-D10
C55	1000 1400V		DAC-2	DD30-102	HVB16D1	3CCD-102	UAC-210	BL-D10

Hallicrafters Part Number.
* Not normally in distributor's stock. Available thru distributor on order to manufacturer.

CONTROLS

ITEM No.	RATING		REPLACEMENT DATA					INSTALLATION NOTES
	RESIST-ANCE	WATTS	Hallicrafters PART No.	CENTRALAB PART No.	CLAROSTAT PART No.	CTS-IRC PART No.	MALLORY PART No.	
R1A	2meg	½	025-201742	B-76	A47-2meg-Z	Q13-139	U55	Volume
B	Shaft			Not Req.	FS-3	Not Req.	Not Req.	
C	Switch			KR-1	SWE-12	76-1	US-26	Power Off-On
R2A	500K	½	025-201719	B-59	A47-500K-S	Q11-133	U50	Indicator Sensitivity
B	Shaft			Not Req.	FKS-1/4	Not Req.	Not Req.	
R3A	250Ω	½	025-101752	TT-2		B11-201		Squelch
B	Shaft			Not Req.		TM4		
R4A	500K	½	025-201728	B-59	A47-500K-S	Q11-133	U50	Mic. Gain
B	Shaft			Not Req.	FS-3	Not Req.	Not Req.	

RESISTORS

All wattages 1/2 watt, or less, unless otherwise listed.

ITEM No.	RATING	REPLACEMENT DATA		REMARKS
		IRC PART No.	WORKMAN TV PART No.	
R5	4700Ω 1W			
R6	1meg			
R7	470K			
R8	220Ω			
R9	10K			
R10	470K			
R11	1meg			
R12	270K			
R13	27Ω			
R14	47K			
R15	180K			
R16	470K			
R17	1000Ω			
R18	100Ω			
R19	1000Ω			
R20	1meg			
R21	1.8meg			
R22	22K 1W			
R23	100Ω			
R24	47K			
R25	100K			
R26	270K			

ITEM No.	RATING	REPLACEMENT DATA		REMARKS
		IRC PART No.	WORKMAN TV PART No.	
R27	470K			
R28	1meg			
R29	15meg			
R30	220K			
R31	2.2meg			
R32	27K			
R33	470K			
R34	330Ω			
R35	430Ω			
R36	15Ω			
R37	470K			
R38	100K			
R39	3900Ω 2W			
R40	39K			
R41	27K			
R42	680Ω 2W			
R43	1000Ω			
R44	100K			
R45	1meg			
R46	1000Ω 2W			
R47	330Ω 2W			
R48	6.8Ω 1W			

COILS (RF-IF)

ITEM No.	USE	REPLACEMENT DATA				NOTES
		Hallicrafters PART No.	Merit PART No.	Miller PART No.	Stancor PART No.	
L1	RF Choke(1.8uh)	053-200546	BC-562	4604	RTC-8516	① IRC Part #CLA
L2	RF Choke(1.8uh)	053-200546	BC-562	4604	RTC-8516	
L3	Ant. Trans.	051-202568	TV-116	6250	RTC-8568	
L4	RF Trans.	051-202567	TV-116	6250	RTC-8568	
L5	Cathode (.82uh)	053-100552 ①	TV-189	4594	RTC-8610	
L6	1st IF	050-300241	BC-352	12-C1	RTC-8632	
L7	2nd IF	050-300241	BC-353	12-C2	RTC-8633	
L8	3rd IF	050-300242	BC-353	12-C2	RTC-8633	
L9	Cathode (100uh)	053-200538	TV-198	6112	RTC-8574	
L10	RF Choke(515uh)	053-200537	TV-188	6174	RTC-8592	
L11	Transmitting Osc.	051-202570				
L12	RF Choke(515uh)	053-200537	TV-188	6174	RTC-8592	
L13	RF Choke(515uh)	053-200537	TV-188	6174	RTC-8592	
L14	Output	051-202571				
L15	RF Choke(1uh)	051-202598	BC-561	4602	RTC-8515	
L16	RF Choke(1uh)	051-202598	BC-561	4602	RTC-8515	
L17A	Line Choke(4uh)	053-200540	BC-564	4608	RTC-8518	
B	Line Choke(4uh)		BC-564	4608	RTC-8518	

TRANSFORMER (POWER)

ITEM No.	RATING			REPLACEMENT DATA					NOTES
	PRI.	SEC. 1	SEC. 2	Hallicrafters PART No.	Merit PART No.	Stancor PART No.	Thordarson PART No.	Triad PART No.	
T1	117V@ .56A	450VCT @.070A DC	5V@ 2A	052-300680-A①					① Alternate Part # 052-300680
	SEC. 3	SEC. 4	SEC. 5						
	6.3V@ 3.5A								

TRANSFORMER (AUDIO OUTPUT)

ITEM No.	IMPEDANCE		REPLACEMENT DATA					NOTES
	PRI.	SEC.	Hallicrafters PART No.	Merit PART No.	Stancor PART No.	Thordarson PART No.	Triad PART No.	
T2	2500Ω	100Ω Tap@ 3-4Ω	055-200406					

SPEAKER

ITEM No.	TYPE			REPLACEMENT DATA		NOTES
	SIZE	FIELD	V. C. IMP.	Hallicrafters PART No.	QUAM PART No.	
SP1	4"x 6"	PM	3-4Ω	085-400203	46A07	

SIGNAL DIODES

ITEM No.	ORIG. TYPE	REPLACEMENT DATA				NOTES
		Hallicrafters PART No.	GENERAL ELECTRIC PART No.	RAYTHEON PART No.	SYLVANIA PART No.	
M1	1N66	019-102311		1N66	1N66	Mod. Indicator Rect. (Pigtail)

MISCELLANEOUS

ITEM No.	PART NAME	Hallicrafters PART No.	NOTES
M2	Crystal	019-302309-	Trans. Osc. (Add Channel Number following hyphen in part Number)
M3	Crystal	019-302308-	Receiver Osc. (Add Channel Number following hyphen in part Number)
M4	Switch	060-202079	Push To Talk (Spring Return, Wafer Type)
M5	Switch	060-202079	Push To Talk (Spring Return, Wafer Type)
M6	Switch	060-200477	Speaker-Phone (SPDT Slide Type)
	Microphone	081-100101	

ALIGNMENT INSTRUCTIONS

ALIGNMENT INSTRUCTIONS—READ CAREFULLY BEFORE ATTEMPTING ALIGNMENT

Volume control should be at maximum position. Output of signal generator should be no higher than necessary to obtain an output reading. Set Squelch, Microphone Gain and Indicator sensitivity controls fully counterclockwise.
Use Signal Generator with accuracy within .005%.
Suggested Alignment Tools: A1 Thru A6... GENERAL CEMENT #5097, 8727
WALSCO #2515
A7, A8..... GENERAL CEMENT #5004, 5009, 8195, 8274, 8275, 8607, 8728, 8987, 8988, 8989, 9291
WALSCO #2515, 2520, 2522, 2523, 2531, 2532, 2534, 2537, 2538
A9, A10, A11... GENERAL CEMENT #8721, 8722
WALSCO #2519

	SIGNAL GENERATOR COUPLING	SIGNAL GENERATOR FREQUENCY	OUTPUT METER	ADJUST	REMARKS
1.	High side thru .01mfd to pin 7 (grid) of Converter. Low side to chassis.	455KC (400~ Mod.)	Across voice coil.	A1, A2, A3, A4, A5, A6	Adjust for maximum output.
2.	High side thru 50Ω to antenna jack. Low side to chassis.	Crystal frequency plus 455KC	"	A7, A8	"
3.			USE VTVM DC probe to point (A). Common to chassis. Connect Wattmeter across antenna jack.	A9, A10	Press "Talk" bar. Adjust A9 for maximum deflection on VTVM. Adjust A10 for maximum output on Wattmeter.
4.			"	A11	Press "Talk" bar. Remove jumper at point (B). Connect vertical amp. of scope across Wattmeter. Adjust A11 for MINIMUM deflection on scope. Reconnect plug at point (B).
5.	High side of Audio Signal generator thru 100K to the Microphone input jack. Low side to chassis.	500~ at .03 volts output.	USE SCOPE Vert. amp. to antenna jack. Low side to chassis.	R4	Adjust for 85% modulation as seen on scope.
6.	"	"	"	R2	Adjust for complete closure of indicator eye at 85% modulation with no foldover or bright area.
7.	Connect a 9MC signal into antenna and adjust C2 for minimum output.				
8.	Connect an 18MC signal into antenna and adjust C3 for minimum output.				

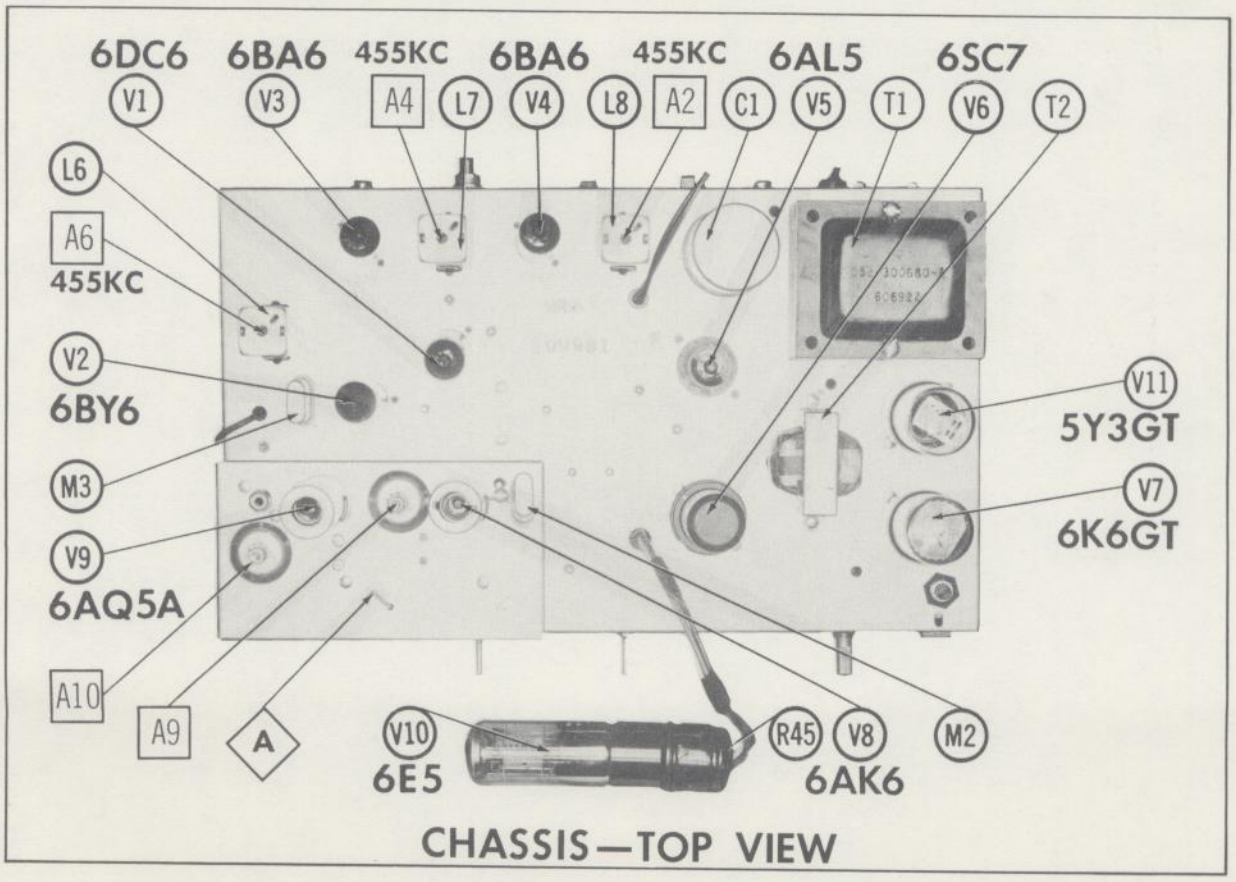

CHASSIS—TOP VIEW

PHOTOFACT® Folder

HEATH MODELS CB-1, W-CB-1

TRADE NAME	Heath Models CB-1 (Kit), W-CB-1 (Wired)
MANUFACTURER	Heath Co., A Subsidiary of Daystrom Inc., Benton Harbor, Michigan
TYPE SET	AC-Battery Operated 4 Tube Citizens Band Transmitter-Receiver
POWER SUPPLY	105 – 125 Volts AC, 50-60 Cycles (or) 6 Volt Storage Battery (or) 12 Volt Storage Battery
RATING	26 Watts, .28 Amp. @117 Volts AC (Receiver); 32 Watts, .34 Amp. @117 Volts AC (Transmit) 1.8 Amp. @6.3 Volts DC .9 Amp. @12.6 Volts DC
TUNING RANGE	Any One of Citizens Band Channels 1 thru 23 (Transmitter is Crystal Controlled, Receiver is Continously Tuneable)

ALIGNMENT PROCEDURE

If the Tuning Capacitor fails to cover the proper tuning range, adjust A1.
Connect the DC probe of the VTVM to pin 7 (grid) of the Final, Common to chassis. Switch on Transmitter and adjust A2 for maximum deflection. Using a field strength meter, adjust A3 for maximum output from the transmitter.
If the transmitter interfers with TV reception, adjust trap A4 for MINIMUM interference.

NOTICE

ONLY THOSE PERSONS PROPERLY LICENSED BY FCC ARE PERMITTED TO MAKE CRYSTAL SUBSTITUTION OR EFFECT REPAIRS ON THE TRANSMITTER PORTION OF THIS UNIT.

HEATH MODELS CB-1, W-CB-1

HOWARD W. SAMS & CO., INC. Indianapolis 6, Indiana

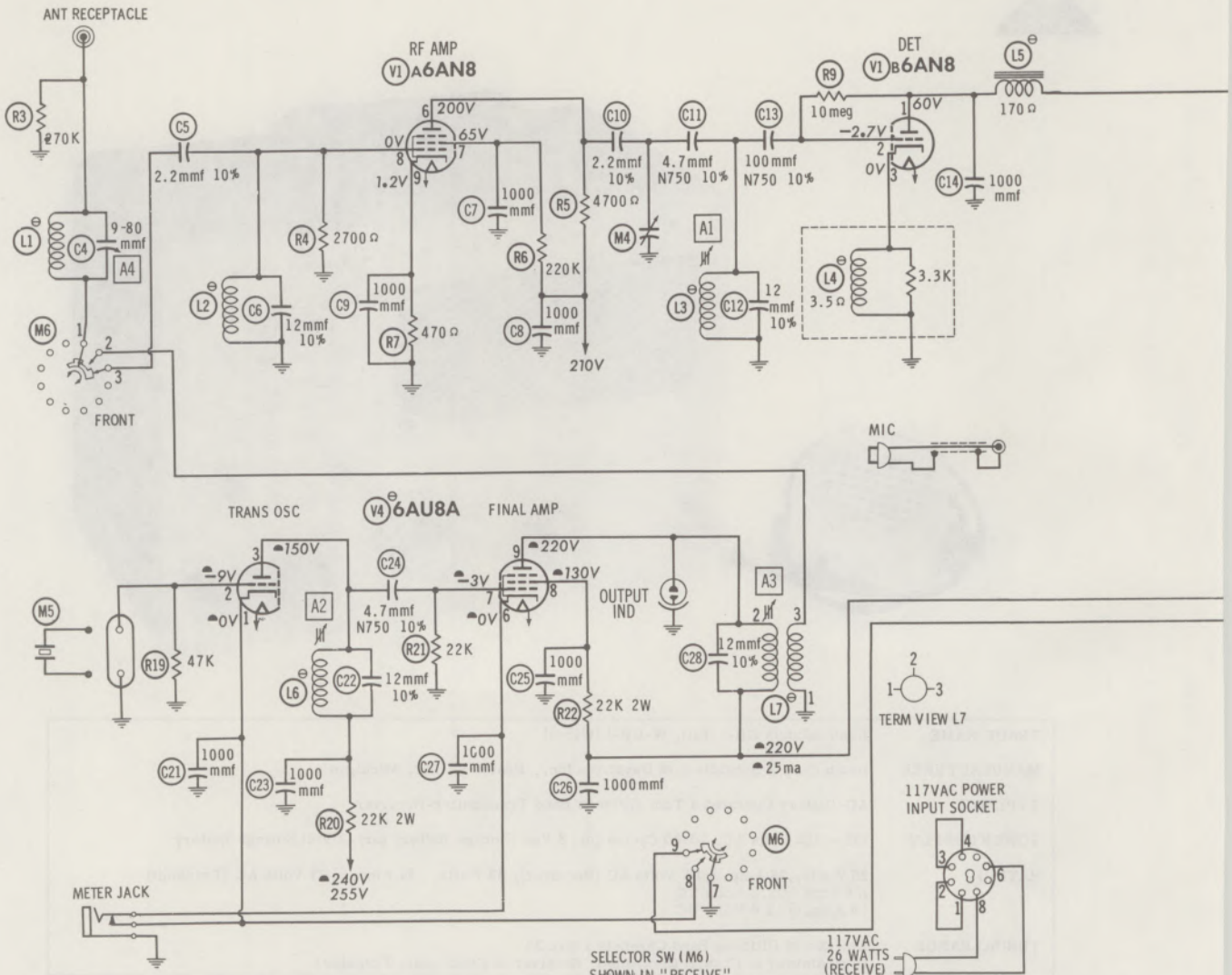

SELECTOR SW (M6) SHOWN IN "RECEIVE" POSITION
SW SEQUENCE
1. TRANSMIT (CCW)
2. RECEIVE
3. TRANSMIT
SPRING RETURN

⊖ SEE PARTS LIST FOR ALTERNATE VALUE OR APPLICATION

DC COIL RESISTANCE VALUES UNDER ONE OHM NOT SHOWN ON SCHEMATIC DIAGRAM

ARROWS ON CONTROLS INDICATE CLOCKWISE ROTATION (CONTROL VIEWED FROM SHAFT END)

RESISTANCE READINGS

ITEM	TUBE	Pin 1	Pin 2	Pin 3	Pin 4	Pin 5	Pin 6	Pin 7	Pin 8	Pin 9
V1	6AN8	†800K	†11meg	3.5Ω	FILS	FILS	†15K	†230K	.1Ω	470Ω
V2	ECC83 12AX7	▲†480K	10meg	0Ω	FILS	FILS	†220K	270K ▲1.3meg	3300Ω	
V3	6AQ5A	270K	470Ω	FILS	FILS	†760Ω	†330Ω	270K		
V4	6AU8A	▲0Ω	47K	†22K	FILS	FILS	▲0Ω	22K	†22K	†710Ω

ALL MEASUREMENTS TAKEN IN "RECEIVE" POSITION UNLESS OTHERWISE INDICATED
† MEASURED FROM OUTPUT OF M1
▲ MEASURED IN "TRANSMIT" POSITION

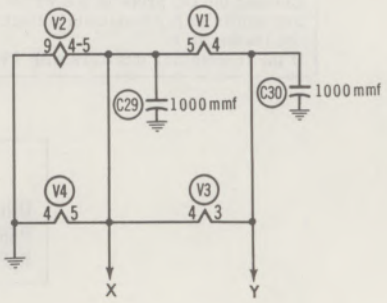

A PHOTOFACT STANDARD NOTATION SCHEMATIC

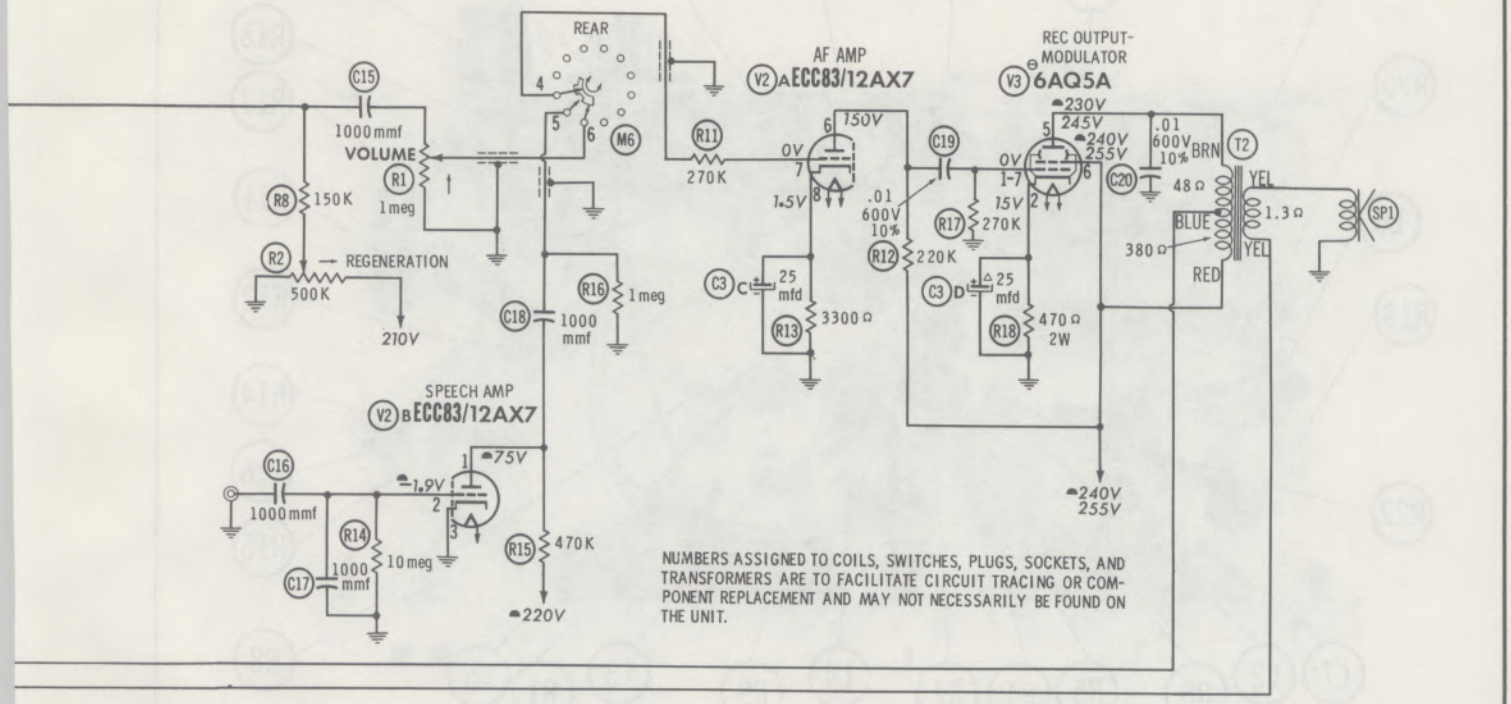

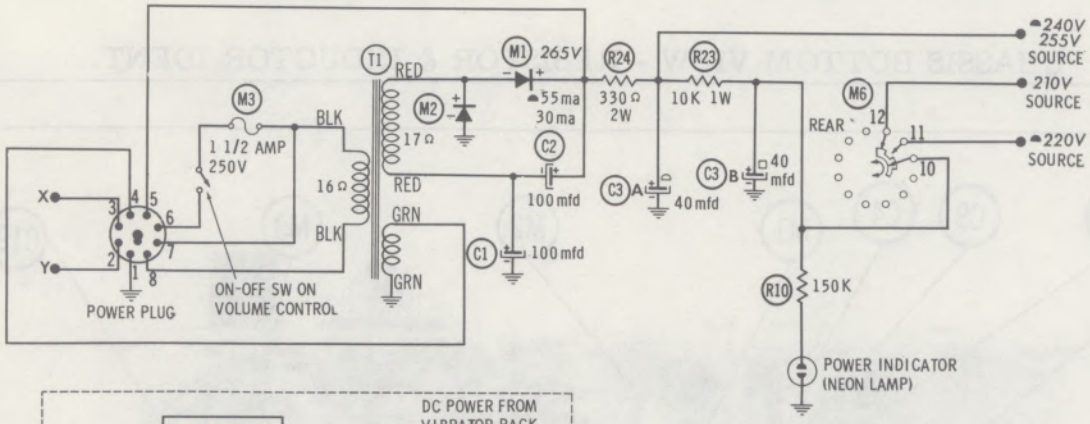

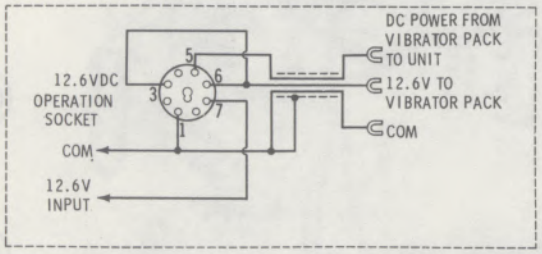

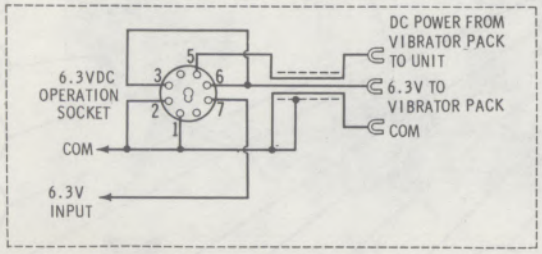

1. DC voltage measurements taken with vacuum tube voltmeter; AC voltages measured with 1000 ohm per volt voltmeter.
2. Socket connections are shown as bottom views.
3. Measured values are from socket pin to common ground.
4. Line voltage maintained at 117 volts for voltage readings.
5. Nominal tolerance of component values makes possible a variation of ±15% in voltage and resistance readings.
6. All controls at minimum, proper output load connected.

HEATH MODELS
CB-1, W-CB-1

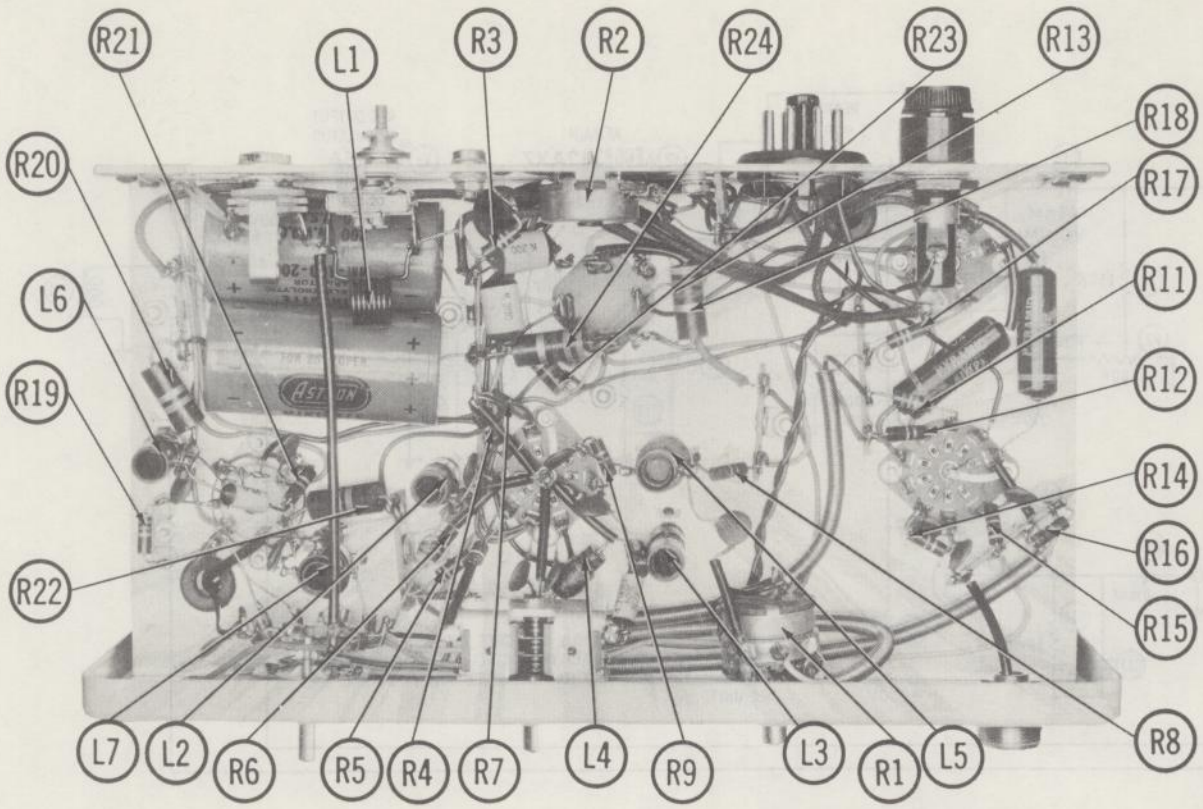

CHASSIS BOTTOM VIEW - RESISTOR & INDUCTOR IDENT.

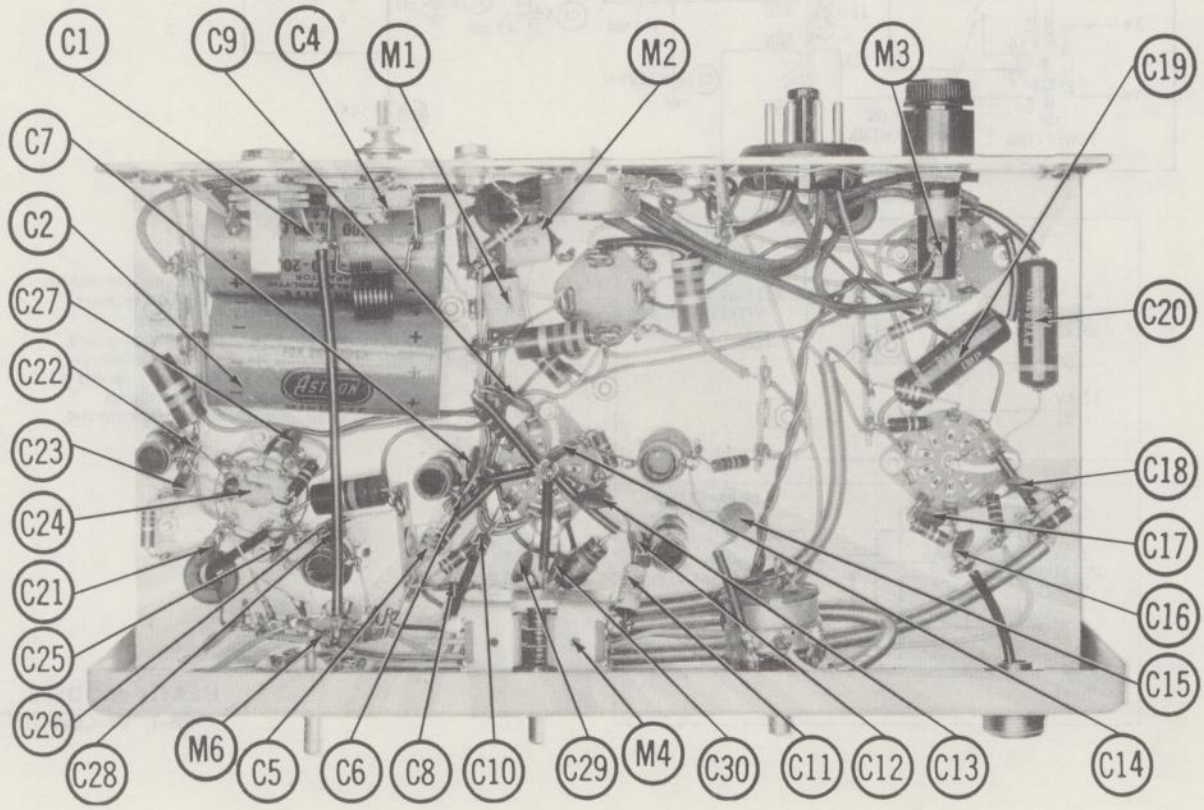

CHASSIS BOTTOM VIEW - CAPACITOR & MISC. IDENT.

PARTS LIST AND DESCRIPTIONS

TUBES

ITEM No.	USE	TYPE	ITEM No.	USE	TYPE
	◆ GENERAL ELECTRIC ◆			RAYTHEON ◆ SYLVANIA ◆	
V1	RF Amp.-Det.	6AN8	V3	Rec. Output - Modulator	6AQ5A (6AQ5) *
V2	AF Amp.-Sqeech Amp.	ECC83/12AX7	V4	Trans. Osc.-Final Amp.	6AU8A (6AU8) *

* Alternate

ELECTROLYTIC CAPACITORS

ITEM No.	RATING CAP.	RATING VOLT.	HEATH PART No.	AEROVOX PART No.	CORNELL-DUBILIER PART No.	MALLORY PART No.	PYRAMID PART No.	SPRAGUE PART No.	NOTES
C1	100	200	C-25-57	PRS1595	BR10035	TC1265	TD-100-200	TVAS-1445 *	
C2	100	200	C-25-57	PRS1595	BR10035	TC1265	TD-100-200	TVAS-1445 *	
C3A	▲ 40	450	B-25-86	AFH4-79	D0663	FP447	TMQ-4550	TVL-4737	
B	■ 40	350							
C	25	25							
D	▲ 25	25							

* Not normally in distributor's stock. Available thru distributor on order to manufacturer.

FIXED CAPACITORS

Capacity values given in the rating column are in mfd. for Paper Capacitors, and in mmfd. for Mica and Ceramic Capacitors.

ITEM No.	RATING	REMARKS	AEROVOX PART No.	CENTRALAB PART No.	CORNELL-DUBILIER PART No.	ELMENCO PART No.	MALLORY PART No.	SPRAGUE PART No.
C4	9-80	#B-31-20				462		
C5	2.2 10%		NPO-SI 2.2	TCZ-2R2	C10V22C	CCTO-2R2	CNO-522	10TCC-V22
C6	12 10%		1469-000012	TCZ-12	22R5Q12	CM-19B-120K	CNO-412	MS-412
C7	1000		BPD-001	DD-102	BYA10D1	CCD-102	B-210	5HK-D10
C8	1000		BPD-001	DD-102	BYA10D1	CCD-102	B-210	5HK-D10
C9	1000		BPD-001	DD-102	BYA10D1	CCD-102	B-210	5HK-D10
C10	2.2 10%		NPO-SI 2.2	TCZ-2R2	C10V22C	CCTO-2R2	CNO-522	10TCC-V22
C11	4.7 N750 10%			TCN-5	C10V5C	CCTN-050	CN7-547	10TCU-V50
C12	12 10%		1469-000012	TCZ-12	22R5Q12	CM-19B-120K	CNO-412	MS-412
C13	100 N750 10%		N750-DI 100	DTN-100	C10T1U	CCTN-101	CN7-101	10TCU-T10
C14	1000		BPD-001	DD-102	BYA10D1	CCD-102	B-210	5HK-D10
C15	1000		BPD-001	DD-102	BYA10D1	CCD-102	B-210	5HK-D10
C16	1000		BPD-001	DD-102	BYA10D1	CCD-102	B-210	5HK-D10
C17	1000		BPD-001	DD-102	BYA10D1	CCD-102	B-210	5HK-D10
C18	1000		BPD-001	DD-102	BYA10D1	CCD-102	B-210	5HK-D10
C19	.01 600V 10%		V84C6S1-10%		PM6S1	6DP-2-103	GEM-1611	6TM-S10
C20	.01 600V 10%		V84C6S1-10%		PM6S1	6DP-2-103	GEM-1611	6TM-S10
C21	1000		BPD-001	DD-102	BYA10D1	CCD-102	B-210	5HK-D10
C22	12 10%		1469-000012	TCZ-12	22R5Q12	CM-19B-120K	CNO-412	MS-412
C23	1000		BPD-001	DD-102	BYA10D1	CCD-102	B-210	5HK-D10
C24	4.7 N750 10%			TCN-5	C10V5U	CCTN-050	CN7-547	10TCU-V50
C25	1000		BPD-001	DD-102	BYA10D1	CCD-102	B-210	5HK-D10
C26	1000		BPD-001	DD-102	BYA10D1	CCD-102	B-210	5HK-D10

CHASSIS—TOP VIEW

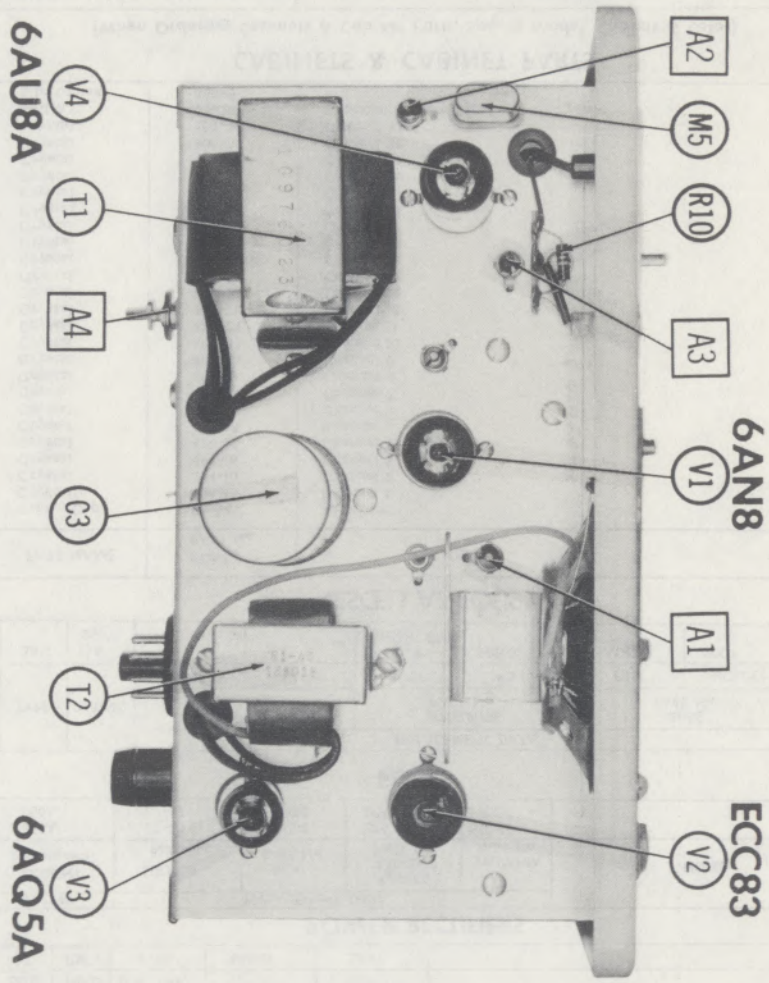

PARTS LIST AND DESCRIPTIONS (Continued)

FIXED CAPACITORS (cont)

ITEM No.	RATING	REMARKS	REPLACEMENT DATA					
			AEROVOX PART No.	CENTRALAB PART No.	CORNELL-DUBILIER PART No.	ELMENCO PART No.	MALLORY PART No.	SPRAGUE PART No.
C27	1000		BPD-001	DD-102	BYA10D1	CCD-102	B-210	5HK-D10
C28	12 10%		1469-000012	TCZ-12	22R5Q12	CM-19B-120K	CNO-412	MS-412
C29	1000		BPD-001	DD-102	BYA10D1	CCD-102	B-210	5HK-D10
C30	1000		BPD-001	DD-102	BYA10D1	CCD-102	B-210	5HK-D10

Heath Part Number.

CONTROLS

ITEM No.	RATING		REPLACEMENT DATA					INSTALLATION NOTES
	RESISTANCE	WATTS	HEATH PART No.	CENTRALAB PART No.	CLAROSTAT PART No.	CTS-IRC PART No.	MALLORY PART No.	
R1A	1meg	½	A-19-27	B-70-S	A47-1meg-Z	Q13-137	U53	Volume
B	Shaft			Not Req.	FS-3	Not Req.	Not Req.	
C	Switch			Not Req.	SWE-12	76-1	US-26	Power Off-On
R2A	500K	½	E-10-60	TT-59	B47-500K-S	B11-133	TA55L	Regeneration
B	Shaft			Not Req.	Not Req.	TM4	Not Req.	

RESISTORS

All wattages 1/2 watt, or less, unless otherwise listed.

ITEM No.	RATING	REPLACEMENT DATA		
		IRC PART No.	WORKMAN TV PART No.	REMARKS
R3	270K			
R4	2700Ω			
R5	4700Ω			
R6	220K			
R7	470Ω			
R8	150K			
R9	10meg			
R10	150K			
R11	270K			
R12	270K			
R13	3300Ω			

ITEM No.	RATING	REPLACEMENT DATA		
		IRC PART No.	WORKMAN TV PART No.	REMARKS
R14	10meg			
R15	470K			
R16	1meg			
R17	270K			
R18	470Ω 2W			
R19	47K			
R20	22K 2W			
R21	22K			
R22	22K 2W			
R23	10K 1W			
R24	330Ω 2W			

COILS (RF-IF)

ITEM No.	USE	REPLACEMENT DATA					NOTES
		HEATH PART No.	Merit PART No.	Miller PART No.	Stancor PART No.	Workman TV PART No.	
L1	RF Trap	D-45-49 *					* L1 thru L7 may be ordered as a set(Part # 141-1).
L2	Ant.	V-40-186 *					
L3	Osc.	V-40-186 *					
L4	RF Choke	45-26 * ①					① Wound on 3300Ω.
L5	RF Choke (75MH)	45-48 *					
L6	Osc. Plate	V-40-186 *					
L7	Final Plate	V-40-187 *					

TRANSFORMER (POWER)

ITEM No.	RATING			REPLACEMENT DATA					NOTES
	PRI.	SEC. 1	SEC. 2	HEATH PART No.	Merit PART No.	Stancor PART No.	Thordarson PART No.	Triad PART No.	
T1	117V ⓐ .34A	100V ⓐ .200A AC	6.3V ⓐ 1.9A	54-87					

TRANSFORMER (AUDIO OUTPUT)

ITEM No.	IMPEDANCE		REPLACEMENT DATA					NOTES
	PRI.	SEC.	HEATH PART No.	Merit PART No.	Stancor PART No.	Thordarson PART No.	Triad PART No.	
T2	6700Ω Tap ⓐ 12%	3-4Ω	51-43		A-3817			

SPEAKER

ITEM No.	TYPE			REPLACEMENT DATA		NOTES
	SIZE	FIELD	V. C. IMP.	HEATH PART No.	QUAM PART No.	
SP1	3½"	PM	3-4Ω	401-21	3A07	

POWER RECTIFIERS

ITEM No.	RATING	REPLACEMENT DATA				NOTES
	CURRENT (Measured)	HEATH PART No.	RCA PART No.	SARKES TARZIAN PART No.	SYLVANIA PART No.	
M1	.055A	57-23	1N1763	2F4	SR200	
M2	.055A	57-23	1N1763	2F4	SR200	

FUSES

ITEM No.	TYPE	RATING	REPLACEMENT DATA					
			HEATH PART No.		LITTELFUSE PART No.		BUSS PART No.	
			FUSE	HOLDER	FUSE	HOLDER	FUSE	HOLDER
M3	3AG	1½A 250V			31201.5 (3AG 1½A 250V	342001	AGC 1½	HKP

MISCELLANEOUS

ITEM No.	PART NAME	HEATH PART No.	NOTES
M4	Tuning Cap.	25-56	Receiver
M5	Crystal	404-14	Channel 1
	Crystal	404-15	Channel 2
	Crystal	404-16	Channel 3
	Crystal	404-17	Channel 4
	Crystal	404-18	Channel 5
	Crystal	404-19	Channel 6
	Crystal	404-20	Channel 7
	Crystal	404-21	Channel 8
	Crystal	404-22	Channel 9
	Crystal	404-23	Channel 10
	Crystal	404-24	Channel 11
	Crystal	404-25	Channel 12
	Crystal	404-26	Channel 13
	Crystal	404-27	Channel 14
	Crystal	404-28	Channel 15
	Crystal	404-29	Channel 16
	Crystal	404-30	Channel 17
	Crystal	404-31	Channel 18
	Crystal	404-32	Channel 19
	Crystal	404-33	Channel 20
	Crystal	404-34	Channel 21
	Crystal	404-35	Channel 22
	Crystal	404-36	Channel 23
M6	Switch	63-210	Function (Rotary Type)
	Microphone	480-8	

CABINETS & CABINET PARTS

(When Ordering Cabinets & Cabinet Parts, Specify Model, Chassis & Color)

NAME	PART NO.	DESCRIPTION
Knob	462-85	Volume, Tuning
Knob	462-86	Function Selector
Handle	211-16	Plastic
Cabinet	90-111	

WIRING DATA

General-use Unshielded Hook-up Wire ..... Use BELDEN No. 8530 (Solid) Available in Ten Colors
8524 (Stranded) Available in Ten Colors

Power Cord ..... Use BELDEN No. 1765-B (6 Ft. Length)
1725-K (7½ Ft. Length)

PHOTOFACT® Folder

LAFAYETTE
MODELS HE-15, HE-16, HE-18

LAFAYETTE
MODELS HE-15, HE-16, HE-18

TRADE NAME	LaFayette Models HE-15, HE-16, HE-18 (External DC Power Supply)		
SUPPLIER	LaFayette Radio, 165-08 Liberty Ave., Jamaica 33, N. Y.		
TYPE SET	6 Tube Citizens Band Transmitter-Receiver		
POWER SUPPLY	105 – 125 Volts AC, 60 Cycles 6 Volt Storage Battery 12 Volt Storage Battery	RATING	40 Watts, .4 Amp. @117 Volts AC 5.3 Amp. @6.3 Volts DC 2.6 Amp. @12.6 Volts DC
FREQ. RANGE	TRANSMITTER: Any 5 of Citizens Band Channels 1 thru 22. RECEIVER: Continous Tuning		

NOTICE

ONLY THOSE PERSONS PROPERLY LICENSED BY FCC ARE PERMITTED TO MAKE CRYSTAL SUBSTITUTION OR EFFECT REPAIRS ON THE TRANSMITTER PORTION OF THIS UNIT.

HOWARD W. SAMS & CO., INC. Indianapolis 6, Indiana

KZ511

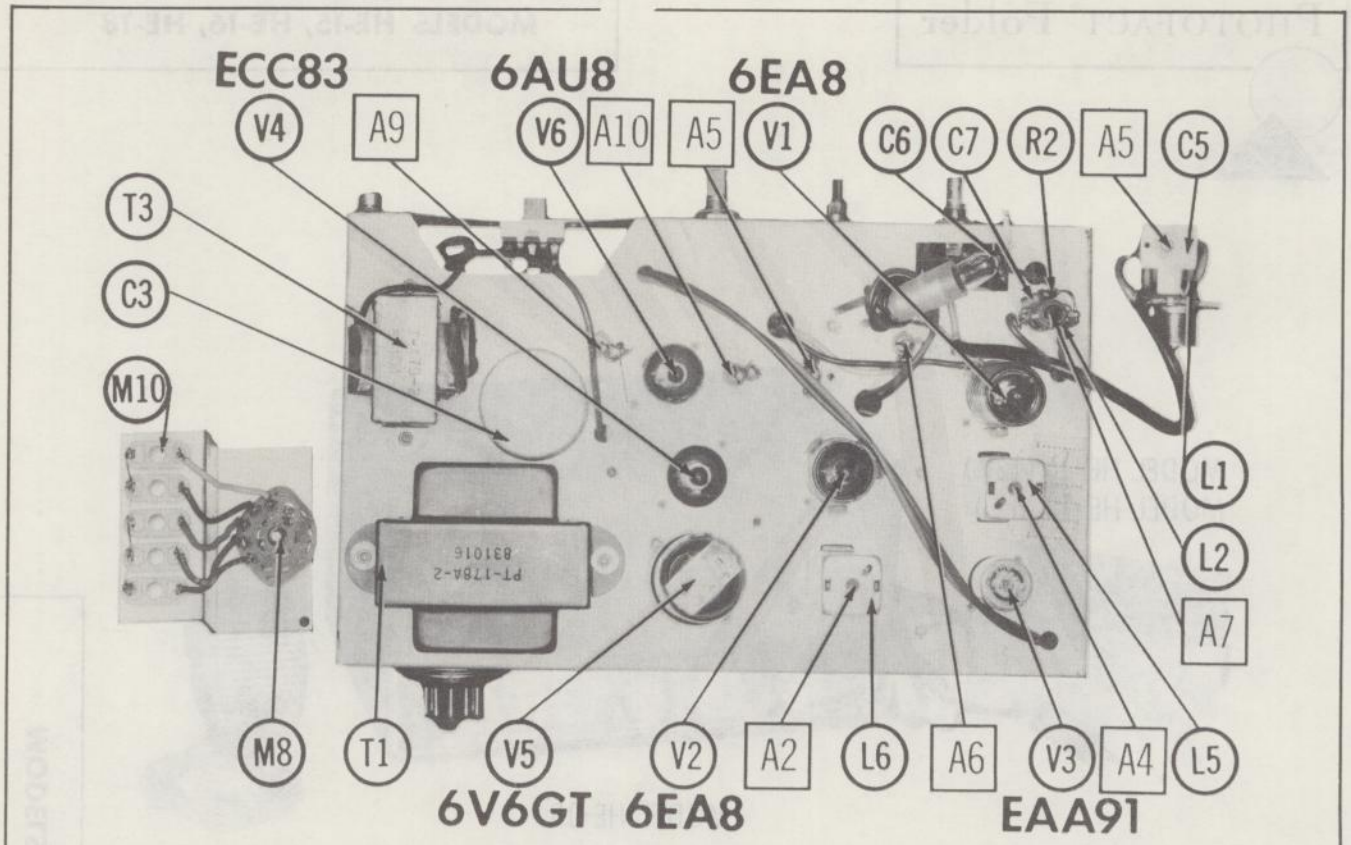

CHASSIS TOP VIEW-ALIGN., MISC., TRANSF. & TUBE IDENT.

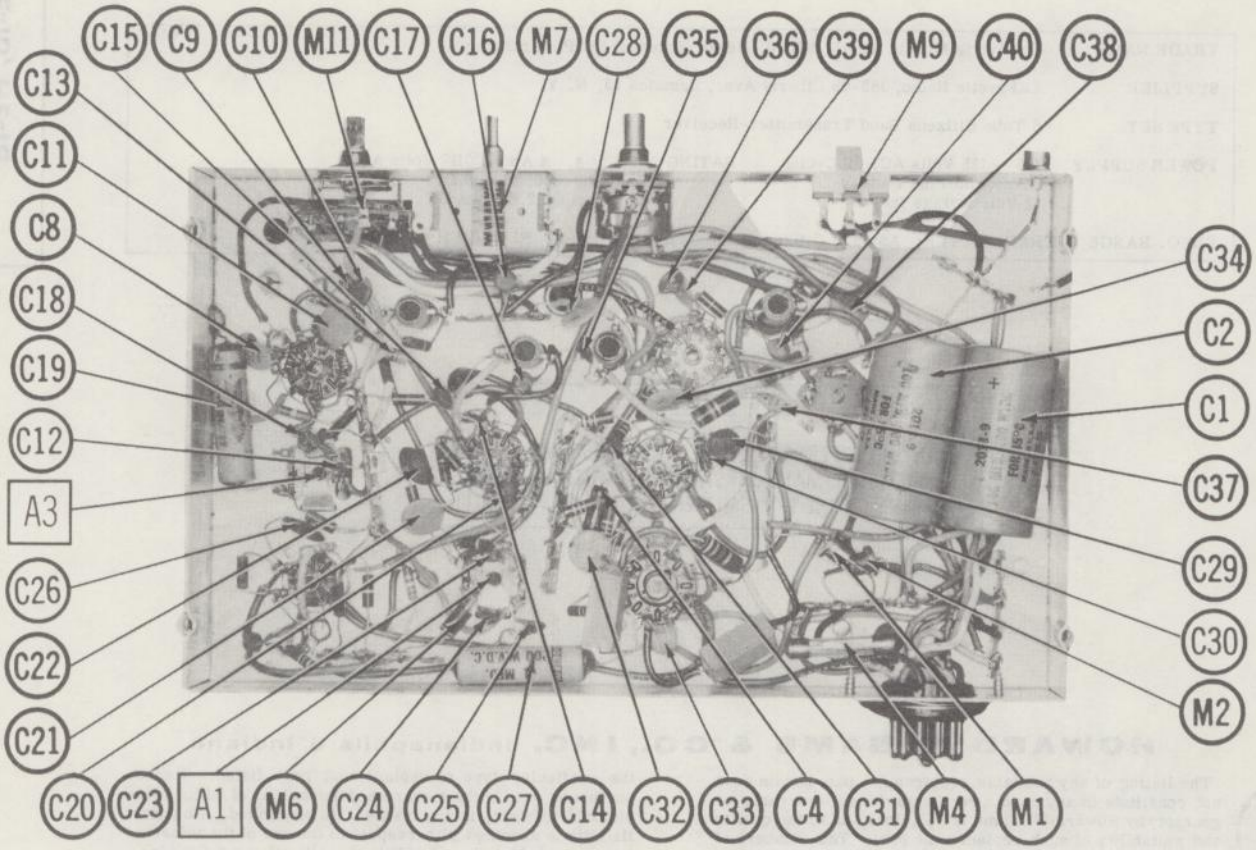

CHASSIS BOTTOM VIEW-ALIGN., CAP. & MISC. IDENT.

ALIGNMENT INSTRUCTIONS

ALIGNMENT INSTRUCTIONS—READ CAREFULLY BEFORE ATTEMPTING ALIGNMENT

Volume control should be at maximum position. Output of signal generator should be no higher than necessary to obtain an output reading.

Suggested Alignment Tools: A1 thru A4..... GENERAL CEMENT #5097, 8727
WALSCO #2515
A8..... GENERAL CEMENT #5000, 5003, 5066, 8276, 8290, 9087, 9089
WALSCO #2512, 2525, 2528

RECEIVER ALIGNMENT

	SIGNAL GENERATOR COUPLING	SIGNAL GENERATOR FREQUENCY	RADIO DIAL SETTING	OUTPUT METER	ADJUST	REMARKS
1.	High side thru .01mfd to pin 9 (grid) of Mixer. Low side to chassis.	1750KC (400∿ Mod.)	High end stop.	Across voice coil.	A1, A2, A3, A4	Adjust for maximum output.
2.	High side thru 270mmf to antenna receptacle. Low side to chassis.	Channel 11 Freq.	Channel 11	"	A5	Adjust until signal is received.
3.	"	"	"	"	A6, A7	Adjust for maximum output.
4.	If television interference occurs, adjust A8 for MINIMUM interference.					

TRANSMITTER ALIGNMENT

5.	NOT USED			USE VTVM DC probe to pin 7 (grid) of Final. Common to chassis.	A9	Depress transmit button and adjust A9 for maximum deflection.
6	NOT USED				A10	Depress transmit button and adjust A10 for maximum brightness of Power Output Indicator light.

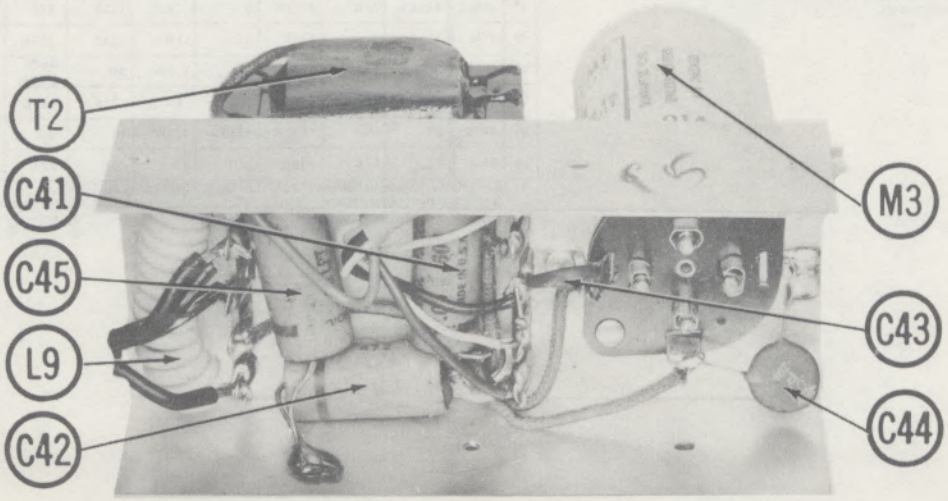

POWER CHASSIS

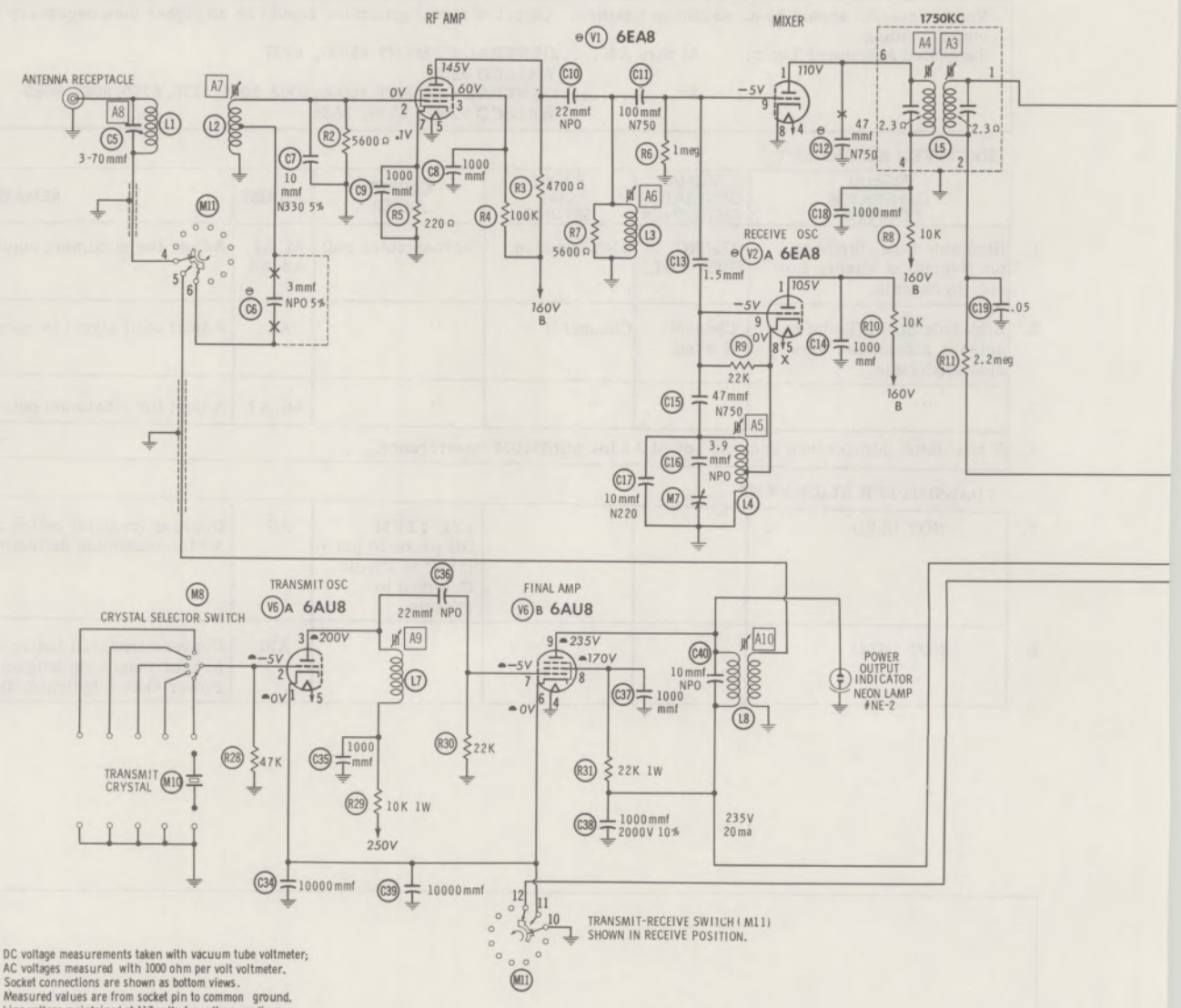

1. DC voltage measurements taken with vacuum tube voltmeter; AC voltages measured with 1000 ohm per volt voltmeter.
2. Socket connections are shown as bottom views.
3. Measured values are from socket pin to common ground.
4. Line voltage maintained at 117 volts for voltage readings.
5. Nominal tolerance on component values makes possible a variation of ±15% in voltage and resistance readings.
6. Volume control at maximum, no signal applied for voltage measurements.

RESISTANCE READINGS

ITEM	TUBE	Pin 1	Pin 2	Pin 3	Pin 4	Pin 5	Pin 6	Pin 7	Pin 8	Pin 9
V1	6EA8	†15K	.1Ω	†100K	0Ω	.1Ω	†10K	220Ω	0Ω	1meg
V2	6EA8	†15K	2meg	†15K	0Ω	.1Ω	†15K	100Ω	0Ω	22K
V3	EAA91	1.5meg	600K	.1Ω	0Ω	1.5meg	0Ω	600K ■ 1meg	FIL	FIL
V4	ECC83 12AX7	▲†470K	4.7meg	0Ω	.1Ω	.1Ω	†22K	470K	3300Ω	0Ω
V5	6V6GT	0Ω	1Ω	†630Ω	†330Ω	470K	TP	0Ω	470Ω	FIL
V6	6AU8	▲0Ω	47K	†10K	.1Ω	0Ω	▲0Ω	22K	▲†22K	▲†710Ω

ALL MEASUREMENTS MADE IN "RECEIVE" POSITION UNLESS OTHERWISE DESIGNATED.
▲ MEASURED IN "TRANSMIT" POSITION.
■ MEASURED WITH NOISE LIMITER IN "OFF" POSITION.
† MEASURED FROM OUTPUT OF M1.
TP TIE POINT

A PHOTOFACT STANDARD NOTATION SCHEMATIC

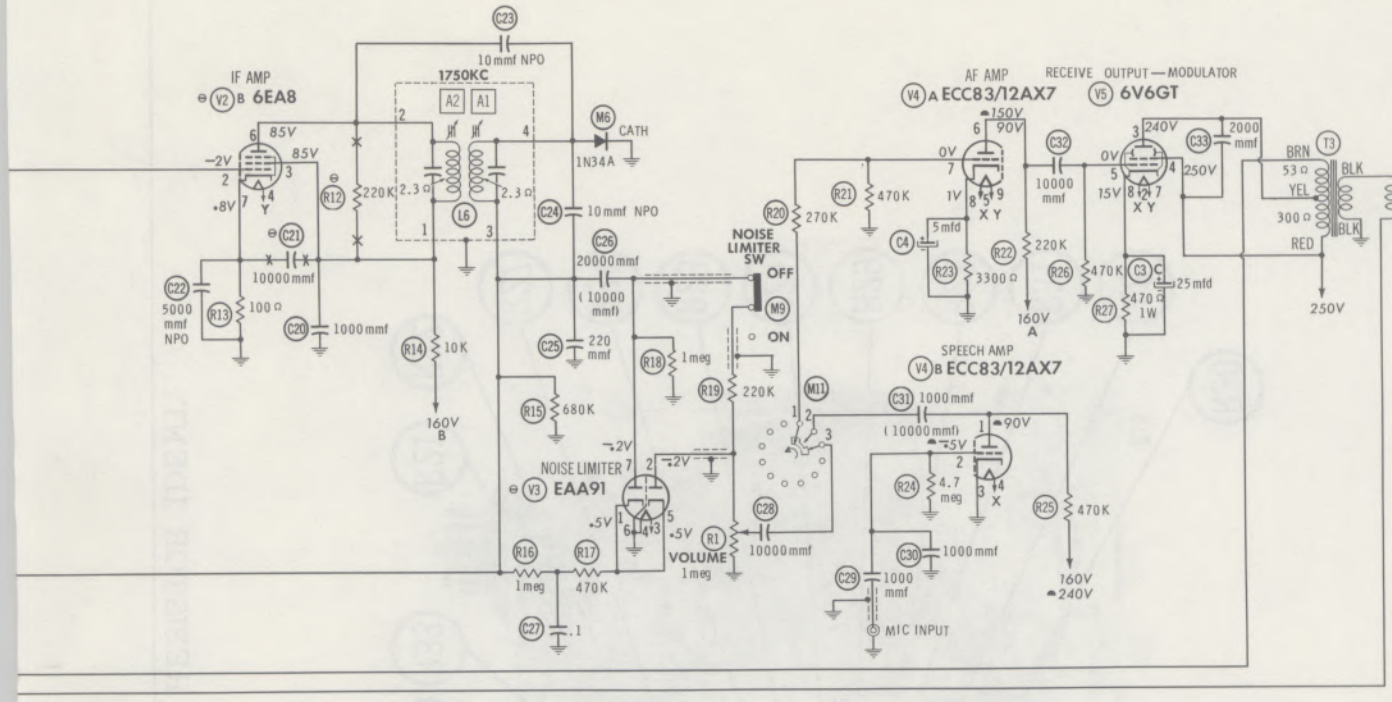

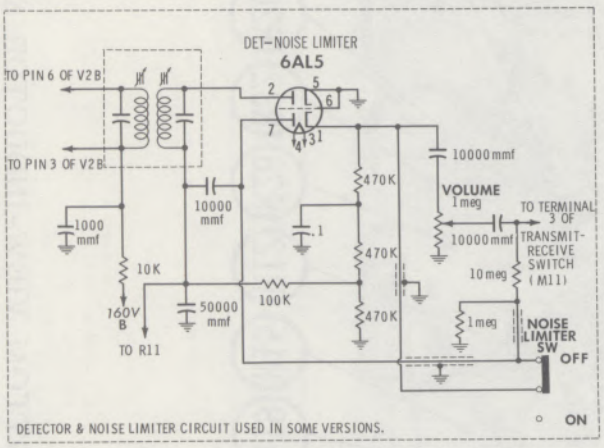

DETECTOR & NOISE LIMITER CIRCUIT USED IN SOME VERSIONS.

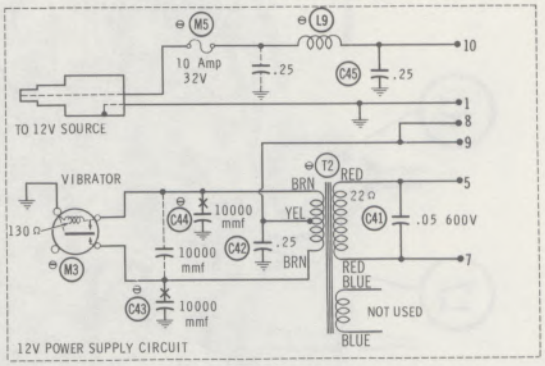

12V POWER SUPPLY CIRCUIT

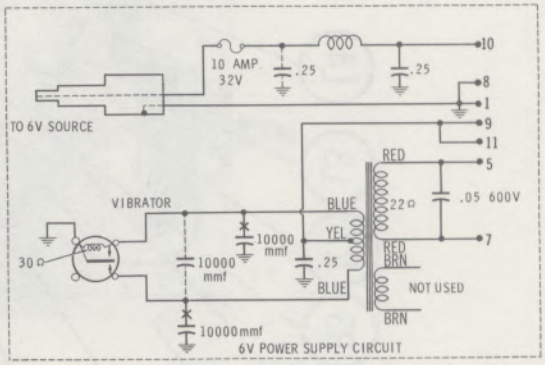

6V POWER SUPPLY CIRCUIT

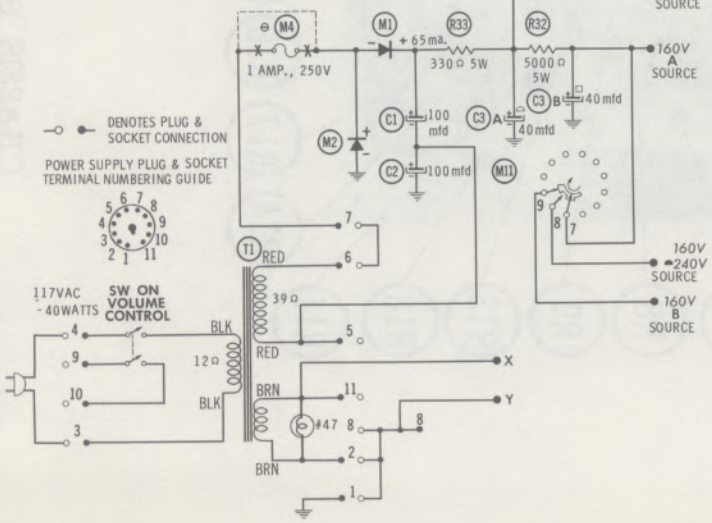

NUMBERS ASSIGNED TO COILS, SWITCHES, PLUGS, SOCKETS, AND TRANSFORMERS ARE TO FACILITATE CIRCUIT TRACING OR COMPONENT REPLACEMENT AND MAY NOT NECESSARILY BE FOUND ON THE UNIT.

⊖ SEE PARTS LIST FOR ALTERNATE VALUE OR APPLICATION

DC COIL RESISTANCE VALUES UNDER ONE OHM NOT SHOWN ON SCHEMATIC DIAGRAM

ARROWS ON CONTROLS INDICATE CLOCKWISE ROTATION (CONTROL VIEWED FROM SHAFT END)

LAFAYETTE
MODELS HE-15, HE-16, HE-18

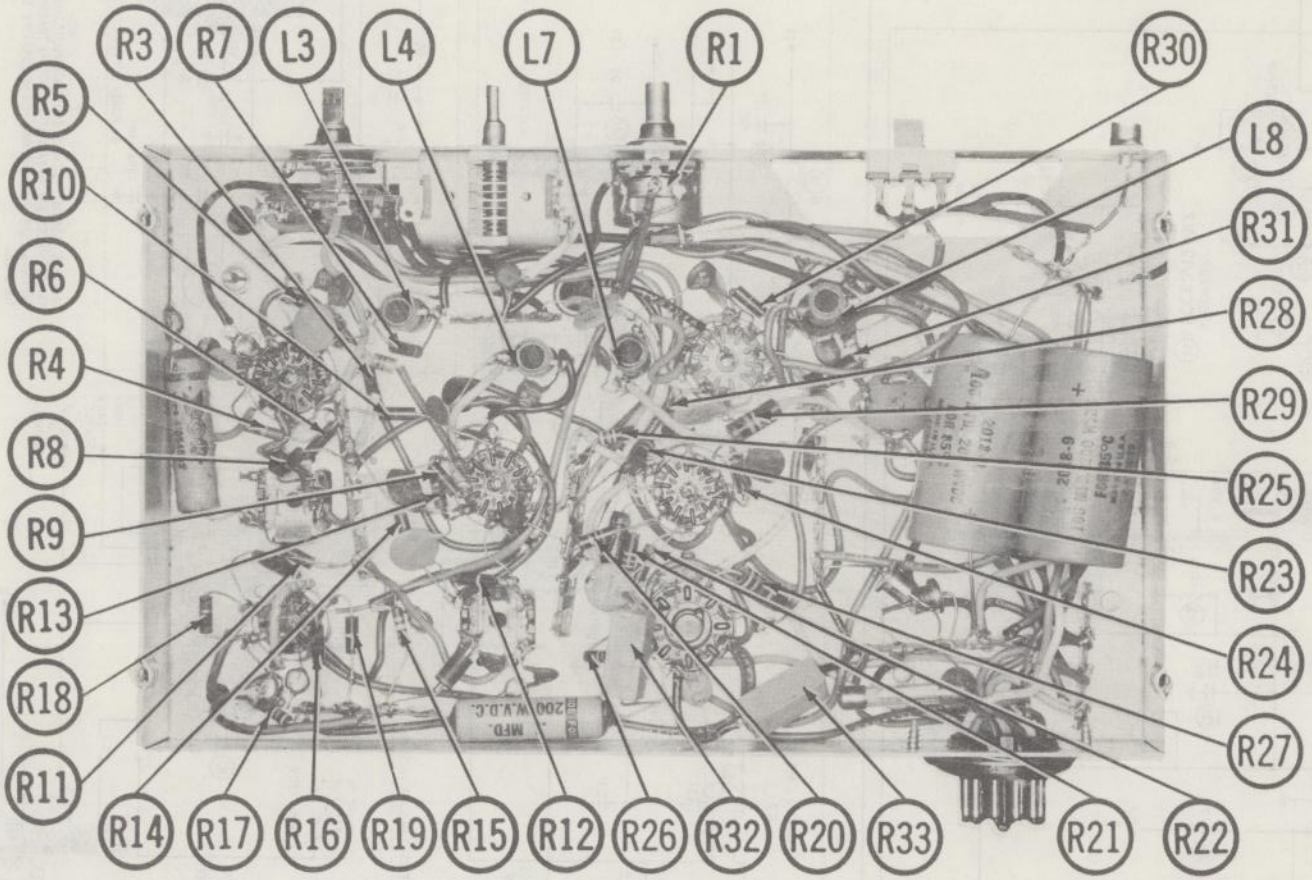

CHASSIS BOTTOM VIEW-INDUCTOR & RESISTOR IDENT.

PARTS LIST AND DESCRIPTIONS

TUBES

ITEM No.	USE	TYPE (GENERAL ELECTRIC)	ITEM No.	USE	TYPE (RAYTHEON / SYLVANIA)
V1	RF Amp.-Mixer	6EA8 (6U8A) *	V4	AF Amp.-Speech Amp.	ECC83/12AX7
V2	Rec. Osc.-IF Amp.	6EA8 (6U8A) *	V5	Rec. Output-Modulator	6V6GT
V3	Det.-Noise Limiter	EAA91 (6AL5) *	V6	Trans. Osc.-Final Amp.	6AU8

* Alternate

ELECTROLYTIC CAPACITORS

ITEM No.	RATING CAP.	RATING VOLT.	LAFAYETTE PART No.	AEROVOX PART No.	CORNELL-DUBILIER PART No.	MALLORY PART No.	PYRAMID PART No.	SPRAGUE PART No.	NOTES
C1	100	200		PRS1595	BR10035	TC1265	TD-100-200	TVA-1718	
C2	100	200		PRS1595	BR10035	TC1265	TD-100-200	TVA-1718	
C3A	40	350		AFH3-140-50	C0870	FP367.5	TMT-3367	TVL-3754.5	
B	40	350							
C	25	25							
C4	5	10		PTT-10005	NLW5-15	TT12X5	MLV5-12	TE-1127	

FIXED CAPACITORS

Capacity values given in the rating column are in mfd. for Paper Capacitors, and in mmfd. for Mica and Ceramic Capacitors.

ITEM No.	RATING	REMARKS	AEROVOX PART No.	CENTRALAB PART No.	CORNELL-DUBILIER PART No.	ELMENCO PART No.	MALLORY PART No.	SPRAGUE PART No.
C5	3-70					462		
C6	3 NPO 5%	Note 1	NPO-SI 3.0	TCZ-3R3	C10V3C	CCTO-3R3	CNO-533	10TCC-V33
C7	10 N330 5%			TCA-10		*		10TCS-Q10
C8	1000		BPD-001	DD-102	BYA10D1	CCD-102	B-210	5HK-D10
C9	1000		BPD-001	DD-102	BYA10D1	CCD-102	B-210	5HK-D10
C10	22 NPO		NPO-DI 22	DTZ-22	C10Q22C	CCTO-220	CNO-422	10TCC-Q22
C11	100 N750		N750-DI 100	DTN-100	C10T1U	CCTN-101	CN7-310	10TCU-T10
C12	47 N750	Note 1	N750-DI 47	DTN-47	C10Q47U	CCTN-470	CN7-447	10TCU-Q47
C13	1.5		NPO-SI 1.5	TCZ-1R5	C10V15C		CNO-515	10TCC-V15
C14	1000		BPD-001	DD-102	BYA10D1	CCD-102	B-210	5HK-D10
C15	47 N750		N750-DI 47	DTN-47	C10Q47U	CCTN-470	CNO-447	10TCU-Q47
C16	3.9 NPO				C10V4C			10TCC-V39
C17	10 N220					*		10TCR-Q10
C18	1000		BPD-001	DD-102	BYA10D1	CCD-102	B-210	5HK-D10
C19	.05 400V		P488N-05	DD-503	CUB4S5	4DP-3-503	GEM-415	4TM-S50
C20	1000		BPD-001	DD-102	BYA10D1	CCD-102	B-210	5HK-D10
C21	10000	Note 1	BPD-01	DD-103	BYA10S1	CCD-103	B-110	5HK-S10
C22	5000		BPD-005	DD-502	BYA10D5	CCD-502	B-250	5HK-D50
C23	10 NPO		NPO-DI 10	DTZ-10	C10Q1C	CCTO-100	CNO-410	10TCC-Q10
C24	10 NPO		NPO-DI 10	DTZ-10	C10Q1C	CCTO-100	CNO-410	10TCC-Q10
C25	220		DI-220	DD-221	L10T22	CCD-221	B-322	10TS-T22
C26	20000	(10000) †	BPD-02	DD-203	BYB6S2	CCD-203	B-120	5HK-S20
C27	.1 200V		P288N-1	DF-104	CUB2P1	2DP-3-104	GEM-201	2TM-P10
C28	10000		BPD-01	DD-103	BYA10S1	CCD-103	B-110	5HK-S10
C29	1000		BPD-001	DD-102	BYA10D1	CCD-102	B-210	5HK-D10
C30	1000		BPD-001	DD-102	BYA10D1	CCD-102	B-210	5HK-D10
C31	1000	(10000) †	BPD-001	DD-102	BYA10D1	CCD-102	B-210	5HK-D10
C32	10000		BPD-01	DD-103	BYA10S1	CCD-103	B-110	5HK-S10
C33	2000		BPD-002	DD-202	BYA10D2	CCD-202	B-220	5HK-D20
C34	10000		BPD-01	DD-103	BYA10S1	CCD-103	B-110	5HK-S10
C35	1000		BPD-001	DD-102	BYA10D1	CCD-102	B-210	5HK-D10
C36	22 NPO		NPO-DI 22	DTZ-22	C10Q22C	CCTO-220	CNO-422	10TCC-Q22
C37	1000		BPD-001	DD-102	BYA10D1	CCD-102	B-210	5HK-D10
C38	1000 2000V 10%							
C39	10000		BPD-01	DD-103	BYA10S1	CCD-103	B-110	5HK-S10
C40	10 NPO		NPO-DI 10	DTZ-10	C10Q1C	CCTO-100	CNO-410	10TCC-Q10
C41	.05 600V		P688N-05	DD-503	CUB6S5	6DP-3-503	GEM-615	6TM-S50
C42	.25 200V		P288N-25		CUB2P25	2DP-4-254	GEM-2025	2TM-P25
C43	10000		BPD-01	DD-103	BYA10S1	CCD-103	B-110	5HK-S10
C44	10000		BPD-01	DD-103	BYA10S1	CCD-103	B-110	5HK-S10
C45	.25 200V		P288N-25		CUB2P25	2DP-4-254	GEM-2025	2TM-P25

Note 1. Not used in some versions.
† Alternate Value.
* Not normally in distributor's stock. Available thru distributor on order to manufacturer.

CONTROLS

ITEM No.	RATING RESISTANCE	RATING WATTS	LAFAYETTE PART No.	CENTRALAB PART No.	CLAROSTAT PART No.	CTS-IRC PART No.	MALLORY PART No.	INSTALLATION NOTES
R1A	1meg	½	V329-3	B-70-S	A47-1meg-Z	Q13-137	U53	Volume
B	Shaft			Not Req.	FS-3	Not Req.	Not Req.	
C	Switch			Not Req.	SWE-20	76-2	US-27	Power Off-On

RESISTORS

All wattages 1/2 watt, or less, unless otherwise listed.

ITEM No.	RATING	IRC PART No.	WORKMAN TV PART No.	REMARKS
R2	5600Ω			
R3	4700Ω			
R4	100K			
R5	220Ω			
R6	1meg			
R7	5600Ω			
R8	10K			
R9	22K			
R10	10K			
R11	2.2meg			
R12	220K			Note 1
R13	100Ω			
R14	10K			
R15	680K			
R16	1meg			
R17	470K			

ITEM No.	RATING	IRC PART No.	WORKMAN TV PART No.	REMARKS
R18	1meg			
R19	220K			
R20	270K			
R21	470K			
R22	220K			
R23	3300Ω			
R24	4.7meg			
R25	470K			
R26	470K			
R27	470Ω 1W			
R28	47K			
R29	10K 1W			
R30	22K			
R31	22K 1W			
R32	5000Ω 5W	PW5-5000	5W-SQ-5000	
R33	330Ω 5W	PW5-330	5W-SQ-330	

Note 1. Not used in some versions.

COILS (RF-IF)

ITEM No.	USE	LAFAYETTE PART No.	Merit PART No.	Miller PART No.	Stancor PART No.	Workman TV PART No.	NOTES
L1	Ant. Loading						① Used in Battery operated units only.
L2	Ant.						
L3	RF		TV-118	6171-A	RTC-8609	T216	
L4	Osc.						
L5	1st IF						
L6	2nd IF						
L7	Osc. Plate		TV-118	6171-A	RTC-8609	T216	
L8	Final Output						
L9	Hash Choke	①					

TRANSFORMER (POWER)

ITEM No.	RATING PRI.	RATING SEC. 1	RATING SEC. 2	LAFAYETTE PART No.	Merit PART No.	Stancor PART No.	Thordarson PART No.	Triad PART No.	NOTES
T1	117V ⓐ .4A	110V ⓐ .2A	6.3V ⓐ 2.3A	PT-178A-2					

TRANSFORMER (POWER)

ITEM No.	RATING PRI.	RATING SEC. 1	RATING SEC. 2	LAFAYETTE PART No.	Merit PART No.	Stancor PART No.	Thordarson PART No.	Triad PART No.	NOTES
T2	6.3V CT ⓐ 3A(or) 12.6VCT ⓐ 1.5A	110V ⓐ .2A	22V (Not Used) ①	VT-181-2 ②					① Secondary 2 is 10 Volts on 12 Volt operation. ② Specify for 6 or 12 volt DC operation

PARTS LIST AND DESCRIPTIONS (Continued)

TRANSFORMER (AUDIO OUTPUT)

ITEM No.	IMPEDANCE PRI.	IMPEDANCE SEC.	REPLACEMENT DATA LAFAYETTE PART No.	Merit PART No.	Stancor PART No.	Thordarson PART No.	Triad PART No.	NOTES
T3	5200Ω Tap @ 5000Ω	3-4Ω	T-179-2		A-3817			

SPEAKER

ITEM No.	TYPE SIZE	TYPE FIELD	TYPE V. C. IMP.	REPLACEMENT DATA LAFAYETTE PART No.	QUAM PART No.	NOTES
SP1	4"	PM	3-4Ω	S7171 (7896144A)	4A07	

POWER RECTIFIERS

ITEM No.	RATING CURRENT (Measured)	REPLACEMENT DATA LAFAYETTE PART No.	RCA PART No.	SARKES TARZIAN PART No.	SYLVANIA PART No.	NOTES
M1	.065A		1N1763	40H	SR500	
M2	.065A		1N1763	40H	SR500	

VIBRATOR

ITEM No.	TYPE	INPUT VOLTS	FREQUENCY	REPLACEMENT DATA LAFAYETTE PART No.	CORNELL-DUBILIER PART No.	MALLORY PART No.	RADIART PART No.	NOTES
M3	Interrupter	6.3V	115~		5301	1601	5301	6 Volt Versions
	Interrupter	12.6V	115~		6301	G1601	6301	12 Volt Versions

FUSES

ITEM No.	TYPE	RATING	REPLACEMENT DATA LAFAYETTE PART No. FUSE	LAFAYETTE HOLDER	LITTELFUSE PART No. FUSE	LITTELFUSE HOLDER	BUSS PART No. FUSE	BUSS HOLDER
M4	3AG	1A 250V P/T			318001 (3AG 1A 250V) P/T		GJV-1	
M5	3AG	10A 32V	Note 1		312010 (3AG 10A 32V)	155020	AGC-5	HDJ

Note 1. For DC Operation Only.

SIGNAL DIODES

ITEM No.	ORIG. TYPE	REPLACEMENT DATA LAFAYETTE PART No.	GENERAL ELECTRIC PART No.	RAYTHEON PART No.	SYLVANIA PART No.	NOTES
M6	1N34A			1N34A	1N34A	Detector (Pigtail)

MISCELLANEOUS

ITEM No.	PART NAME	LAFAYETTE PART No.	NOTES
M7	Variable Cap.		Receiver Oscillator
M8	Switch		Crystal Selector
M9	Switch		Noise Limiter (SPDT Slide Type)
M10	Crystal		Transmit
M11	Switch		Receive-Transmit
	Antenna		Model HE-17

WIRING DATA

General-use Unshielded Hook-up Wire ..... Use BELDEN No. 8530 (Solid) Available in Ten Colors
8524 (Stranded) Available in Ten Colors
Shielded Hook-up Wire ..... Use BELDEN No. 8885
Bonding Strap ..... Use BELDEN No. 8661

PHOTOFACT® Folder

MORROW MODELS CB-1, -2, -3, 5W1-6, -12, -117, 5W3-6, -12, -117

MODEL 5W3-117

TRADE NAME	Morrow Models CB-1, CB-2, CB-3, 5W1-6, 5W1-12, 5W1-117, 5W3-6, 5W3-12, 5W3-117
MANUFACTURER	Morrow Radio Mfg. Co., 2794 Market Street, N. E., Salem, Oregon
TYPE SET	11 Tube Crystal Controlled 3 Channel Citizens Band Transmitter-Receiver (CB Series are Single Channel)
POWER SUPPLY	Models CB-1, 5W1-6, 5W3-6: 6 Volt Storage Battery Models CB-2, 5W1-12, 5W3-12: 12 Volt Storage Battery Models CB-3, 5W1-117, 5W3-117: 110-120 Volts AC, 60 Cycles
RATING	(Model 5W3-117) 68 Watts, .62 Amp. @ 117 Volts AC (Transmit), 61 Watts, .56 Amp. @ 117 Volts AC (Receive) (6 Volt Versions) 8 Amp. @ 6.3 Volts DC (12 Volt Versions) 4 Amp. @ 12.6 Volts DC
TUNING RANGE	Any Citizens Band Channel 1 thru 23

MORROW MODELS CB-1, -2, -3, 5W1-6, -12, -117, 5W3-6, -12, -117

NOTICE

ONLY THOSE PERSONS PROPERLY LICENSED BY FCC ARE PERMITTED TO MAKE CRYSTAL SUBSTITUTION OR EFFECT REPAIRS ON THE TRANSMITTER PORTION OF THIS UNIT.

HOWARD W. SAMS & CO., INC. Indianapolis 6, Indiana

KZ486

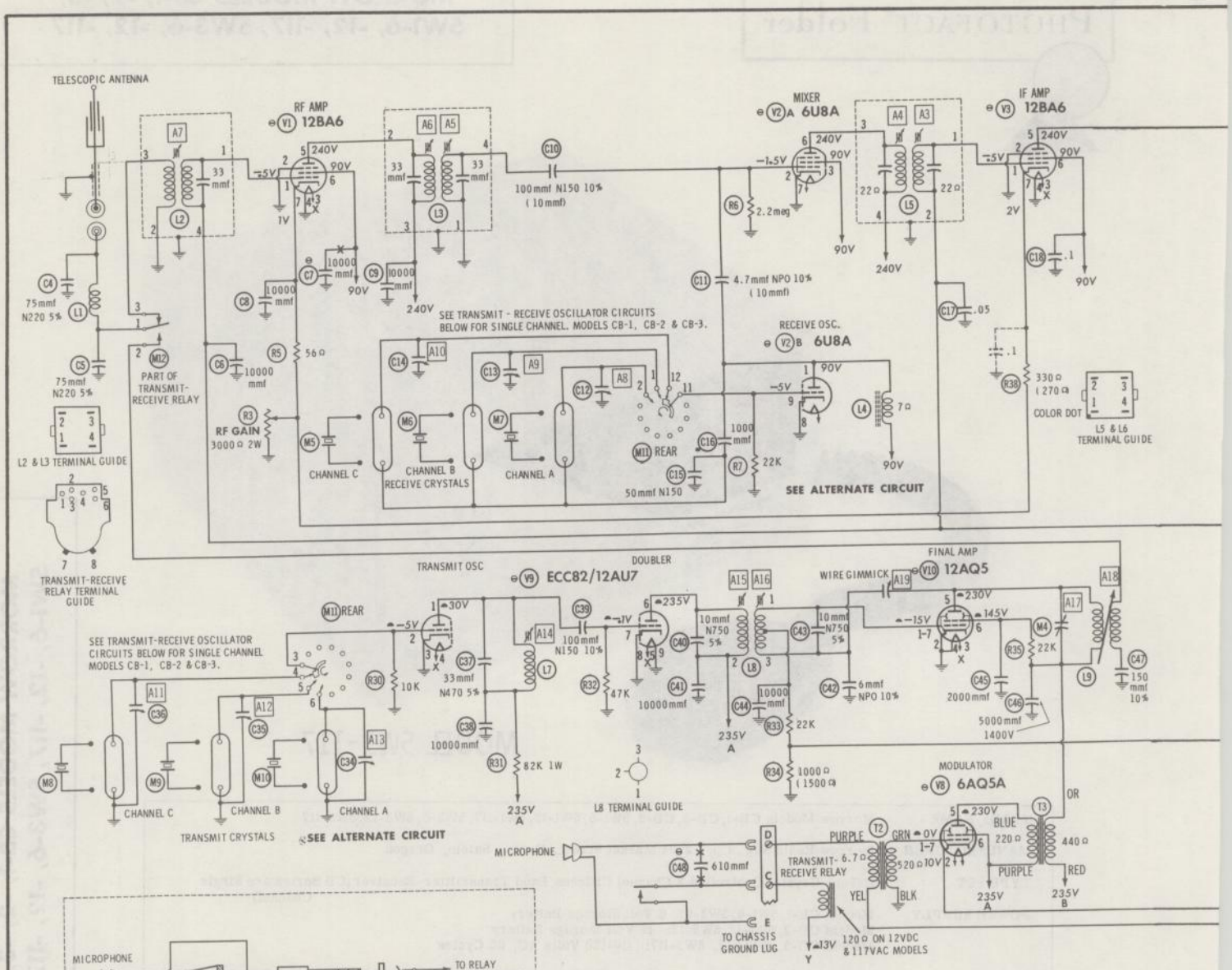

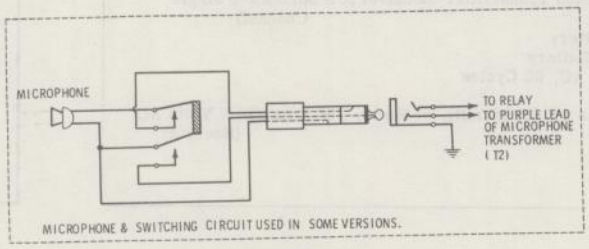

MICROPHONE & SWITCHING CIRCUIT USED IN SOME VERSIONS.

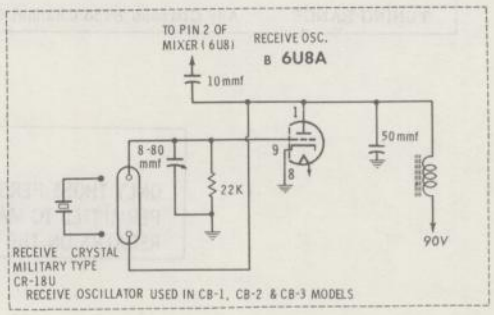

RECEIVE OSCILLATOR USED IN CB-1, CB-2 & CB-3 MODELS

RESISTANCE READINGS

ITEM	TUBE	Pin 1	Pin 2	Pin 3	Pin 4	Pin 5	Pin 6	Pin 7	Pin 8	Pin 9
V1	12BA6	2.4meg	0Ω	.1Ω	0Ω	†250Ω	†15K	●100Ω		
V2	6U8A	†15K	2.2meg	†15K	0Ω	.1Ω	†270Ω	0Ω	0Ω	22K
V3	12BA6	2.4meg	0Ω	.1Ω	0Ω	†270Ω	†15K	●310Ω		
V4	12AL5	0Ω	100K	.1Ω	0Ω	2.2meg	0Ω	240K		
V5	ECC83 12AX7	†220K	470K	1500Ω	.1Ω	0Ω	▪470K	1.4meg	200Ω	0Ω
V6	12AU6	▪10meg	45K	.1Ω	0Ω	†330K	†40K	45K		
V7	12AQ5	470K	370Ω	.1Ω	0Ω	†545Ω	†250Ω	470K		
V8	6AQ5A	250Ω	370Ω	.1Ω	.1Ω	▪†690Ω	▪†250Ω	NC		
V9	ECC82 12AU7	†82K	10K	0Ω	.1Ω	0Ω	▪†250Ω	47K	0Ω	NC
V10	12AQ5	23K	0Ω	.1Ω	0Ω	▪†470Ω	▪†22K	NC		
V11	5Y3GT	NC	¶100K	NC	97Ω	NC	95Ω	NC	¶100K	

ALL MEASUREMENTS MADE IN "RECEIVE" POSITION WITH MICROPHONE DISCONNECTED UNLESS OTHERWISE DESIGNATED.

● THIS READING WILL VARY. CONTROL SET FOR NORMAL OPERATION.
¶ THIS READING WILL VARY DEPENDING UPON THE CONDITION OF THE ELECTROLYTIC IN THE CIRCUIT.
▪ MEASURED IN "TRANSMIT" POSITION WITH MICROPHONE DISCONNECTED.
■ MEASURED FROM PIN 7 OF V6. ▲ MEASURED FROM CATHODE.
† MEASURED FROM PIN 2 OF V11. NC NO CONNECTION

A PHOTOFACT STANDARD NOTATION SCHEMATIC

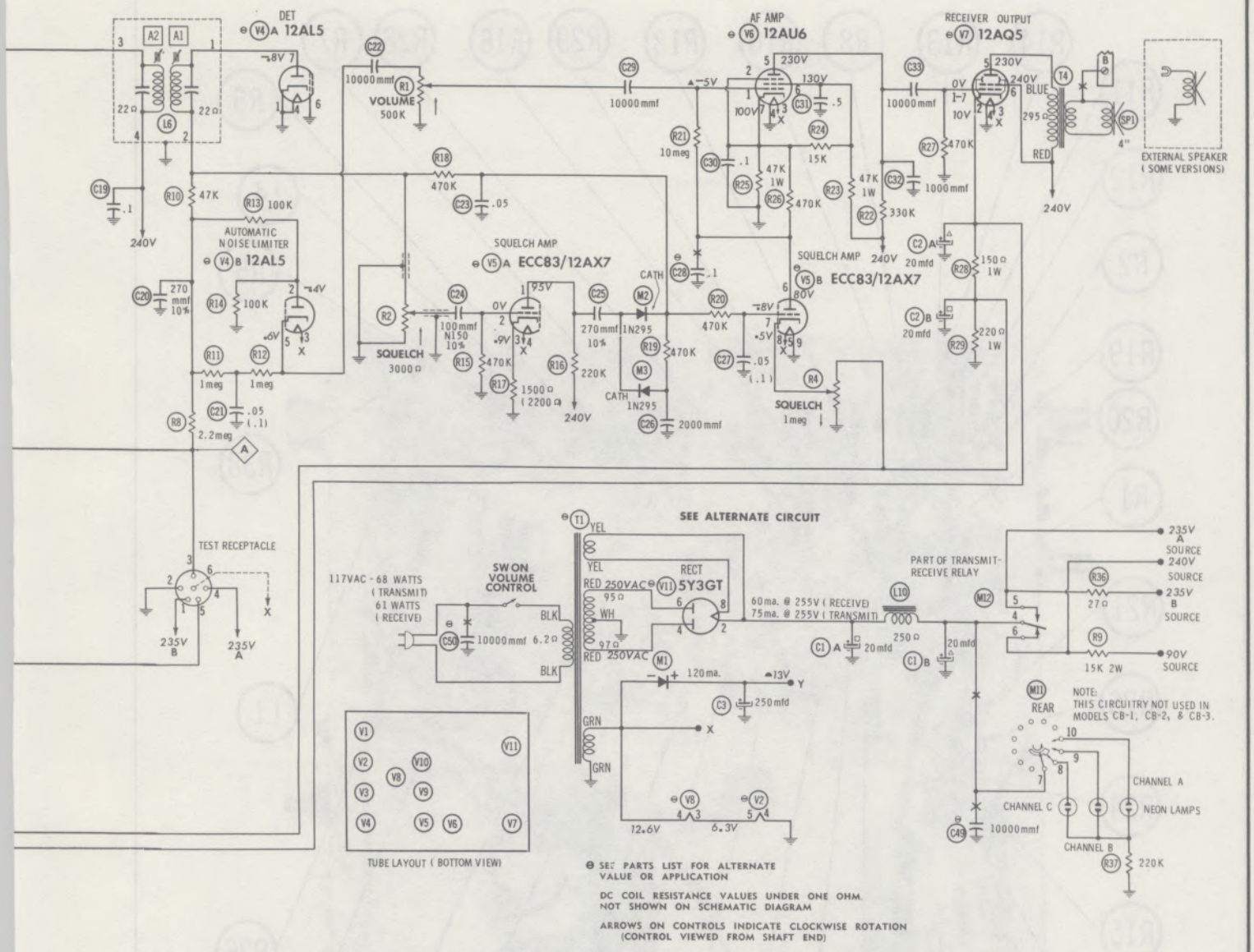

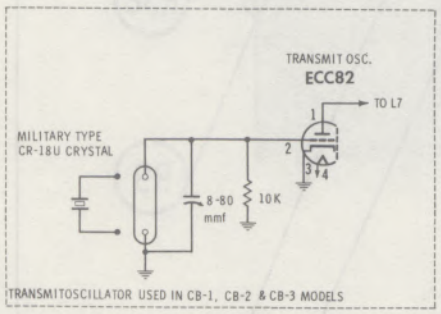

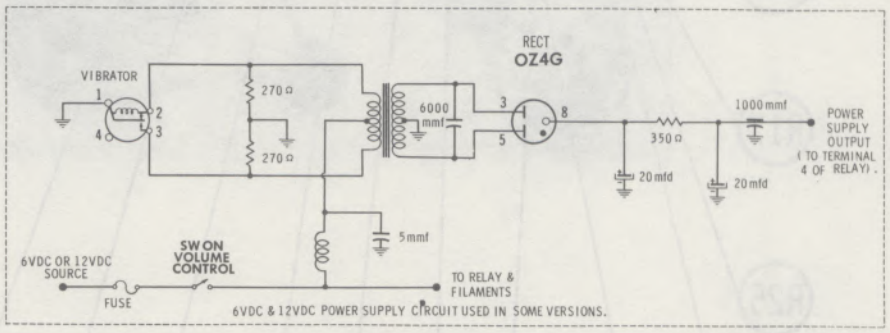

1. DC voltage measurements taken with vacuum tube voltmeter; AC voltages measured with 1000 ohm per volt voltmeter.
2. Socket connections are shown as bottom views.
3. Measured values are from socket pin to common ground.
4. Line voltage maintained at 117 volts for voltage readings.
5. Nominal tolerance of component values makes possible a variation of ±15% in voltage and resistance readings.
6. All controls at minimum, proper output load connected.

NUMBERS ASSIGNED TO COILS, SWITCHES, PLUGS, SOCKETS, AND TRANSFORMERS ARE TO FACILITATE CIRCUIT TRACING OR COMPONENT REPLACEMENT AND MAY NOT NECESSARILY BE FOUND ON THE UNIT.

MORROW MODELS CB-1, -2, -3, 5W1-6, -12, -117, 5W3-6, -12, -117

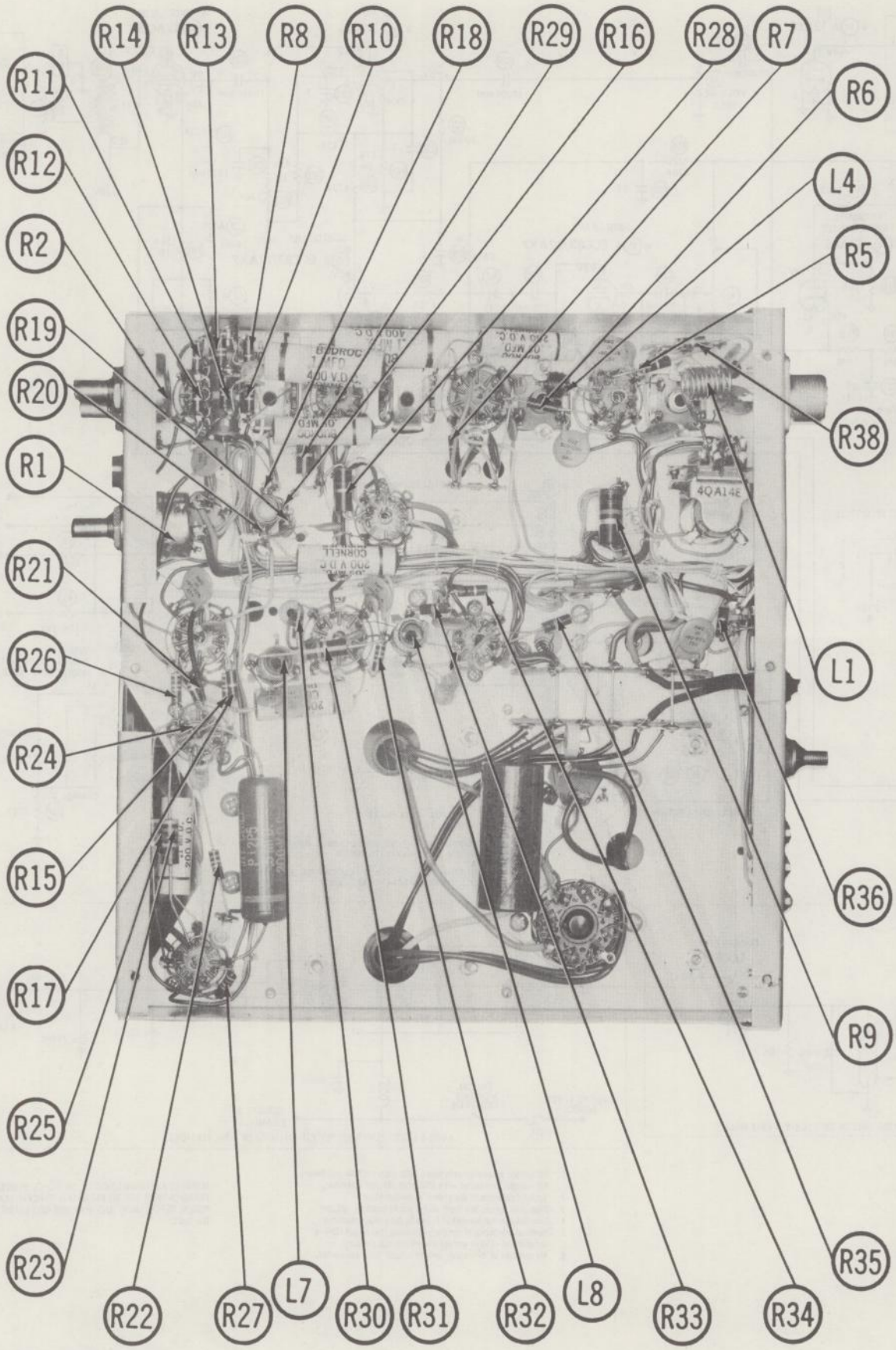

CHASSIS BOTTOM VIEW-RESISTOR & INDUCTOR IDENT.

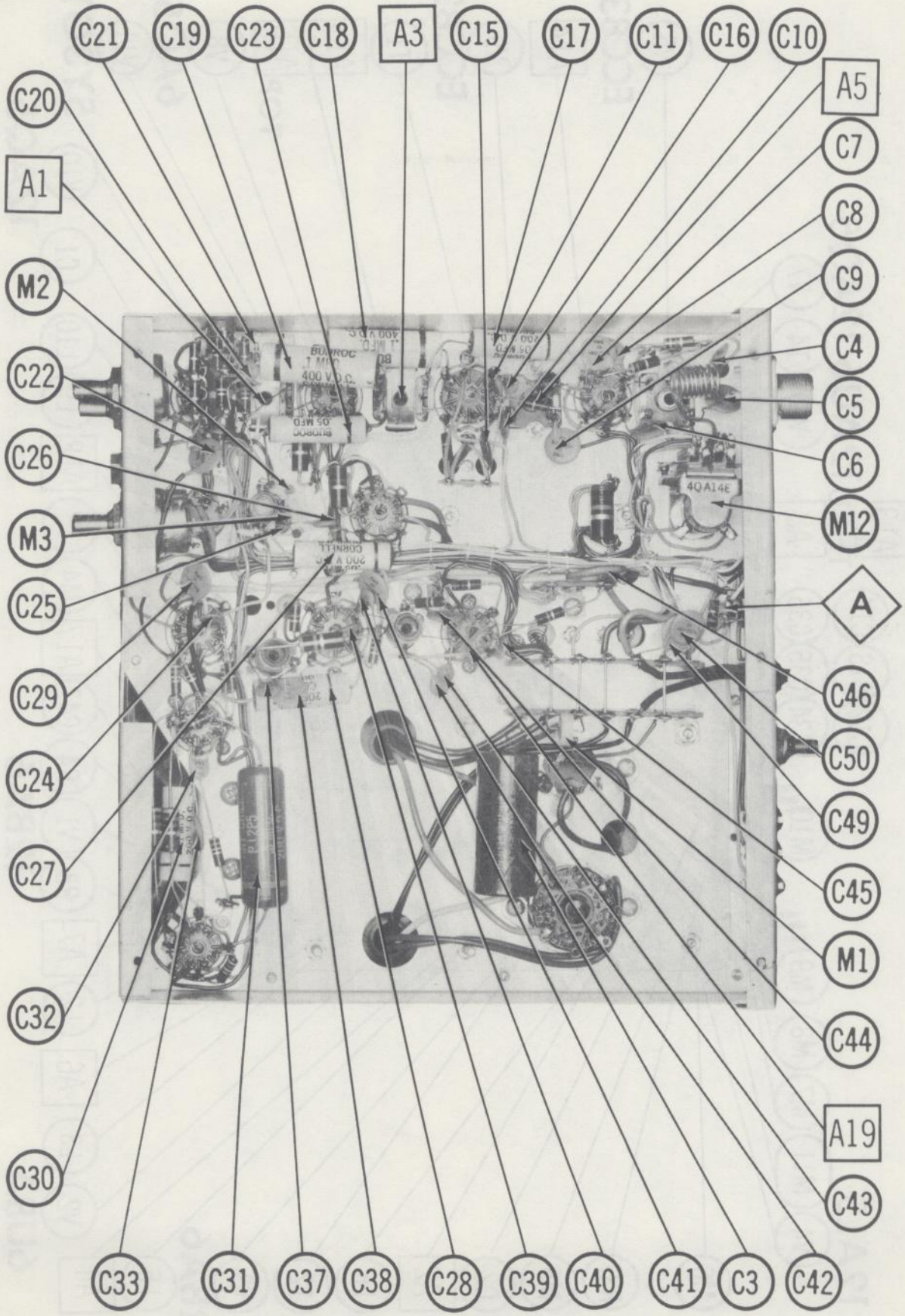

CHASSIS BOTTOM VIEW-ALIGNMENT, CAPACITOR & MISC. IDENT.

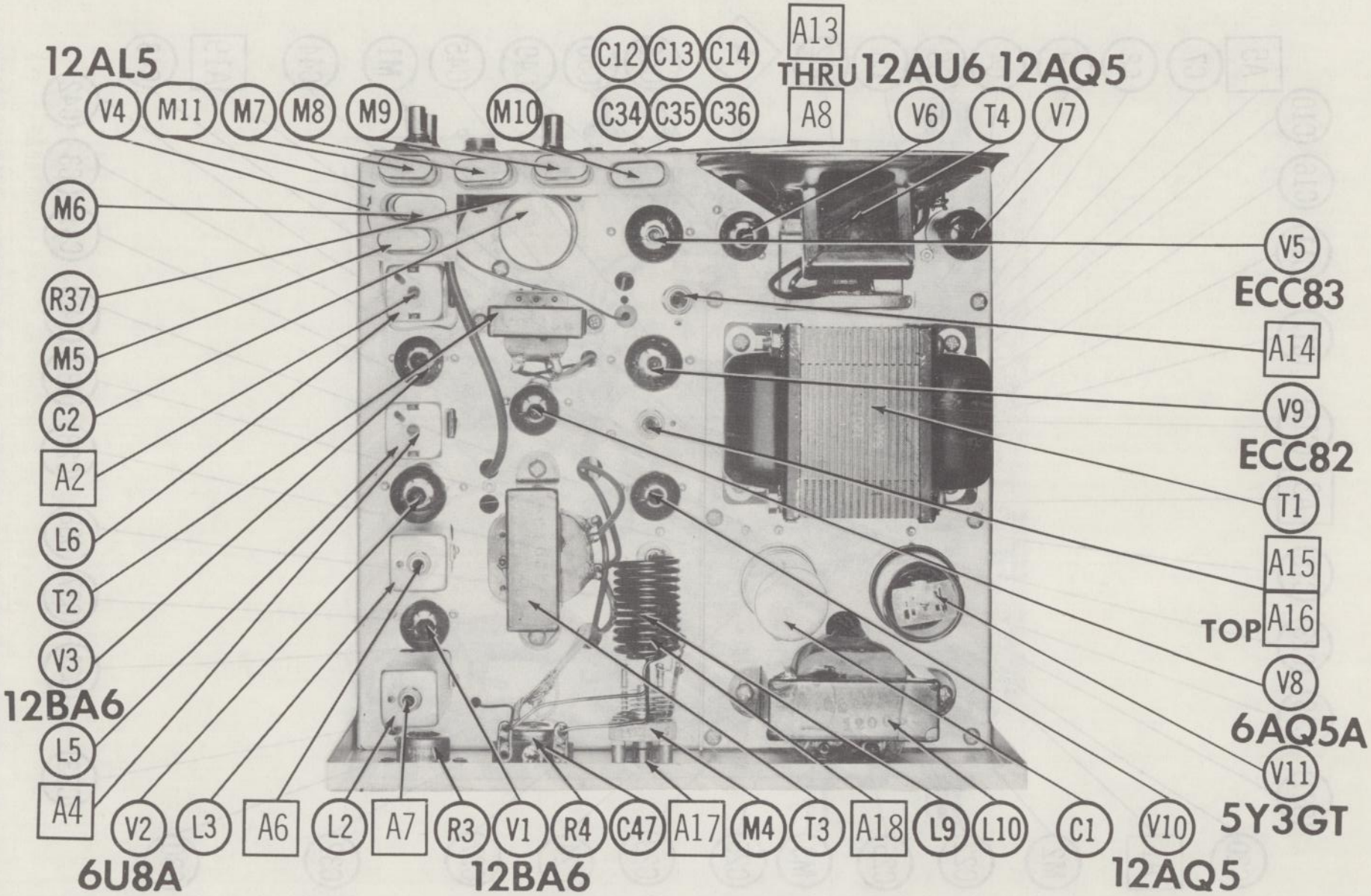

CHASSIS-TOP VIEW

PARTS LIST AND DESCRIPTIONS

TUBES

ITEM No.	USE	TYPE (GENERAL ELECTRIC • RAYTHEON • SYLVANIA •)	
V1	RF Amplifier	12BA6	Note 1
V2	Mixer-Osc.	6U8A	
V3	IF Amplifier	12BA6	Note 1
V4	Det. -ANL	12AL5	Note 1
V5	Squelch Amplifier	ECC83/12AX7	Note 1
V6	AF Amplifier	12AU6	Note 1
V7	Receiver Output	12AQ5	Note 1
V8	Modulator	6AQ5A	
V9	Trans. Osc. -Doubler	ECC82/12AU7	Note 1
V10	Final Amplifier	12AQ5	Note 1
V11	Rectifier	5Y3GT	Note 2

Note 1. 6 Volt Models use 6V Equivalent.
Note 2. 6-12 Volt Models use OZ4 in this application.

ELECTROLYTIC CAPACITORS

ITEM No.	RATING CAP.	RATING VOLT.	MORROW PART No.	AEROVOX PART No.	CORNELL-DUBILIER PART No.	MALLORY PART No.	PYRAMID PART No.	SPRAGUE PART No.	NOTES
C1A	■20	350		AFH2-37	B0300	FP227	TMD-2375	TVL-2755	
B	▲20	350							
C2A	▲20	25		AFH2-03	B0050	FP208	TMD-2075	TVL-2415	
B	■20	25							
C3	250	15		PRS1210	BR2501	TC50025	TD-250-15	TVA-1161	

FIXED CAPACITORS

Capacity values given in the rating column are in mfd. for Paper Capacitors, and in mmfd. for Mica and Ceramic Capacitors.

ITEM No.	RATING	REMARKS	AEROVOX PART No.	CENTRALAB PART No.	CORNELL-DUBILIER PART No.	ELMENCO PART No.	MALLORY PART No.	SPRAGUE PART No.
C4	75 N220 5%					*		
C5	75 N220 5%					*		
C6	10000		BPD-01	DD-103	BYA10S1	CCD-103	B-110	5HK-S10
C7	10000	Note 1	BPD-01	DD-103	BYA10S1	CCD-103	B-110	5HK-S10
C8	10000		BPD-01	DD-103	BYA10S1	CCD-103	B-110	5HK-S10
C9	10000		BPD-01	DD-103	BYA10S1	CCD-103	B-110	5HK-S10
C10	100 N150 10%	(10) †				*		10TCP-T10
C11	4.7 NPO 10%	(10) †	NPO-DI 4.7	DTZ-4R7	C10V47C	CCTO-4R7	CNO-547	10TCC-V47
C12								
C13								
C14								
C15	50 N150					*		10TCP-Q50
C16	1000		BPD-001	DD-102	BYA10D1	CCD-102	B-210	5HK-D10
C17	.05 200V		P288N-05	DD-503	CUB2S5	4DP-3-415	GEM-415	2TM-S50
C18	.1 400V		P488N-1	DF-104	CUB4P1	4DP-3-104	GEM-401	4TM-P10
C19	.1 400V		P488N-1	DF-104	CUB4P1	4DP-3-104	GEM-401	4TM-P10
C20	270 10%		DI-270	DD-271	L10T27	CCD-271	GP327	10TS-T27
C21	.05 200V	(.1) †	P288N-05	DD-503	CUB2S5	4DP-3-503	GEM-215	2TM-S50
C22	10000		BPD-01	DD-103	BYA10S1	CCD-103	B-110	5HK-S10
C23	.05 200V		P288N-05	DD-503	CUB2S5	4DP-3-503	GEM-415	2TM-S50
C24	100 N150 10%					*		10TCP-T10
C25	270 10%		DI-270	DD-271	L10T27	CCD-271	GP327	10TS-T27
C26	2000		BPD-002	DD-202	BYA10D2	CCD-202	B-220	5HK-D20
C27	.05 200V	(.1) †	P288N-05	DD-503	CUB2S5	4DP-3-503	GEM-415	2TM-S50
C28	.1 200V	Note 1	P288N-1	DF-104	CUB2P1	2DP-3-104	GEM-201	2TM-P10
C29	10000		BPD-01	DD-103	BYA10S1	CCD-103	B-110	5HK-S10
C30	.1 200V		P288N-1	DF-104	CUB2P1	2DP-3-104	GEM-201	2TM-P10
C31	.5 200V		P288N-5		CUB2P5	2DP-5-504	GEM-205	2TM-P50
C32	1000		BPD-001	DD-102	BYA10D1	CCD-102	B-210	5HK-D10
C33	10000		BPD-01	DD-103	BYA10S1	CCD-103	B-110	5HK-S10
C34								
C35								
C36								
C37	33 N470 5%					*		
C38	10000		BPD-01	DD-103	BYA10S1	CCD-103	B-110	5HK-S10
C39	100 N150 10%					*		10TCP-T10
C40	10 N750 5%		N750-DI 10	DTN-10	C10Q1U	CCTN-100	CN7-410	10TCU-Q10
C41	10000		BPD-01	DD-103	BYA10S1	CCD-103	B-110	5HK-S10
C42	6 NPO 10%		NPO-DI 6.8	DTZ-6R8	C10V6C	CCTO-6R8	CNO-568	10TCC-V68

ALIGNMENT INSTRUCTIONS

RECEIVER

1. Connect DC probe of VTVM to point Ⓐ, Common to chassis. Turn squelch controls, R2 and R4 on front and rear panels, to maximum clockwise position.

   Connect a 470K resistor across the secondary of L5 (1st IF Trans).

   Connect high side of Signal Generator (455KC, 400~ Mod.) thru .05mfd to pin 2 of V2A, low side to chassis. Adjust A1, A2, A3 and A4 for maximum deflection.

2. Connect high side of Signal Generator tuned to the proper channel frequency, (400~ Mod.) to the antenna socket. Adjust A5, A6 and A7 for maximum deflection. Retouch A1, A2, A3, and A4. Remove 470K resistor.

3. Using a Frequency Meter, Adjust A8, A9 and A10 to exact frequency marked on oscillator crystals (within 100 cps).

TRANSMITTER

1. Connect a 50 ohm dummy load to antenna. Using a Frequency Meter, Adjust A11, A12 and A13 to the exact frequency marked on oscillator crystals, (within 100 cps).

2. Connect a 0-50 ma. meter to pins 1 and 4 and a 0-2 ma. meter to pins 2 and 5 of test jack on rear panel. Adjust A14 for maximum grid current and then back off 10% on the long slope.

   Adjust A15 and A16 for maximum grid current.

   Adjust A17 for minimum plate current, then Adjust A18 for 20 ma. at a plate voltage of 250 Volts. Do not exceed 23 ma. of plate current.

3. The power amplifier requires neutralization. Grid current will be maximum when the plate current is minimum as A17 is tuned through resonance. Slight adjustment of A19 may be necessary in the field.

4. Remove the 50 ohm dummy load and connect transmitter to the antenna.

   Adjust A17 for minimum plate current then adjust A18 for 20 ma. plate current.

FIXED CAPACITORS (cont)

ITEM No.	RATING	REMARKS	AEROVOX PART No.	CENTRALAB PART No.	CORNELL-DUBILIER PART No.	ELMENCO PART No.	MALLORY PART No.	SPRAGUE PART No.
C43	10 N750 5%		N750-DI 10	DTN-10	C10Q10U	CCTN-10	CN7-410	10TCU-Q10
C44	10000		BPD-01	DD-103	BYA10S1	CCD-103	B-110	5HK-S10
C45	2000		BPD-002	DD-202	BYA10D2	CCD-202	B-220	5HK-D20
C46	5000 1400V		DAC-9	DD16-502	HVE16D5	3CCD-502	UAC-250	BL-050
C47	150 10%		DI-150	DD-151	L10T15	CCD-151	GP315	10TS-T15
C48	610	Note 1			L10T62	CM-19B-621M	GP360	10TS-T60
C49	10000	Note 1	BPD-01	DD-103	BYA10S1	CCD-103	B-110	5HK-S10
C50	10000	Note 1	BPD-01	DD-103	BYA10S1	CCD-103	B-110	5HK-S10

Note 1. Not used in some versions.
† Alternate Value.
* Not normally in distributor's stock. Available thru distributor on order to manufacturer.

CONTROLS

ITEM No.	RATING RESISTANCE	RATING WATTS	MORROW PART No.	CENTRALAB PART No.	CLAROSTAT PART No.	CTS-IRC PART No.	MALLORY PART No.	INSTALLATION NOTES
R1A	500K	½	311-001	B-60-S	A47-500K-Z	Q13-133	U48	Volume
B	Shaft			Not Req.	RS-2	Not Req.	Not Req.	
C	Switch			Not Req.	SWE-12	76-1	US-26	Power Off-On
C2A	3000Ω	½	311-021	B-8	A47-3000-S	Q11-112	U-8	Squelch
B	Shaft			Not Req.	RS-2	Not Req.	Not Req.	
R3	3000Ω	2(WW)	311-010	WN-302	39-3000	112-3000	FL-3K	RF Gain
R4A	1meg	½	311-022	B-69	A47-1meg-S	Q11-137	U54	Squelch
B	Shaft			Not Req.	RS-2	Not Req.	Not Req.	

PARTS LIST AND DESCRIPTIONS (Continued)

RESISTORS

All wattages 1/2 watt, or less, unless otherwise listed.

ITEM No.	RATING	REPLACEMENT DATA		
		IRC PART No.	WORKMAN TV PART No.	REMARKS
R5	56Ω			
R6	2.2meg			
R7	22K			
R8	2.2meg			
R9	15K 2W			
R10	47K			
R11	1meg			
R12	1meg			
R13	100K			
R14	100K			
R15	470K			
R16	220K			
R17	1500Ω			(2200Ω) *
R18	470K			
R19	470K			
R20	470K			
R21	10meg			

ITEM No.	RATING	REPLACEMENT DATA		
		IRC PART No.	WORKMAN TV PART No.	REMARKS
R22	330K			
R23	47K 1W			
R24	15K			
R25	47K 1W			
R26	470K			
R27	470K			
R28	150Ω 1W			
R29	220Ω 1W			
R30	10K			
R31	82K 1W			
R32	47K			
R33	22K			
R34	1000Ω			(1500Ω) *
R35	22K			
R36	27Ω			
R37	220K			
R38	330Ω			(270Ω) *

* Used in some versions.

COILS (RF-IF)

ITEM No.	USE	REPLACEMENT DATA					NOTES
		MORROW PART No.	Merit PART No.	Miller PART No.	Stancor PART No.	Workman TV PART No.	
L1	RF Choke (.3uh)						
L2	Ant.	108-126		6252	RTC-8570	T234	
L3	RF	108-127					
L4	RF Choke (500uh)		TV-203	6174	RTC-8592	T324	
L5	Input IF	108-506	BC-352	12-C1	RTC-8632	T607	
L6	Output IF	108-506	BC-353	12-C2	RTC-8633	T608	
L7	Osc. Plate	108-128	TV-118	6171-A	RTC-8609	T216	
L8	Driver	108-129					
L9	Final Plate						

FILTER CHOKE

ITEM No.	RATINGS			REPLACEMENT DATA					NOTES
	CURRENT (Measured)	DC RES.	INDUCTANCE (0 CURRENT 1000 ∿)	MORROW PART No.	Merit PART No.	Stancor PART No.	Thordarson PART No.	Triad PART No.	
L10	.075A	250Ω	11 HY	120-055			26C84	C-8X	

TRANSFORMER (POWER)

ITEM No.	RATING			REPLACEMENT DATA					NOTES
	PRI.	SEC. 1	SEC. 2	MORROW PART No.	Merit PART No.	Stancor PART No.	Thordarson PART No.	Triad PART No.	
T1	117V ⓐ .62A	500VCT ⓐ .075A	5V ⓐ 2A	120-137 ①					① Part #120-135 used in 6V Operation. Part #120-136 used in 12V Operation.
	SEC. 3	SEC. 4	SEC. 5						
	12.6V ⓐ 1.8A								

TRANSFORMER (MIC)

ITEM No.	TURNS RATIO		REPLACEMENT DATA					NOTES
	PRI.	SEC.	MORROW PART No.	Merit PART No.	Stancor PART No.	Thordarson PART No.	Triad PART No.	
T2	1	11	120-133				A-3X	

TRANSFORMER (MOD)

ITEM No.	TURNS RATIO		REPLACEMENT DATA					NOTES
	PRI.	SEC.	MORROW PART No.	Merit PART No.	Stancor PART No.	Thordarson PART No.	Triad PART No.	
T3	1	1	120-134					

TRANSFORMER (AUDIO OUTPUT)

ITEM No.	IMPEDANCE		REPLACEMENT DATA					NOTES
	PRI.	SEC.	MORROW PART No.	Merit PART No.	Stancor PART No.	Thordarson PART No.	Triad PART No.	
T4	4800Ω	3-4Ω	439-520 ①	A-3026		24S48	S-6X	① Includes Speaker

SPEAKER

ITEM No.	TYPE			REPLACEMENT DATA		NOTES
	SIZE	FIELD	V. C. IMP.	MORROW PART No.	QUAM PART No.	
SP1	4"	PM	3-4Ω	439-520 *	4A1	* Includes T4

POWER RECTIFIERS

ITEM No.	RATING	REPLACEMENT DATA				NOTES
	CURRENT (Measured)	MORROW PART No.	RCA PART No.	SARKES TARZIAN PART No.	SYLVANIA PART No.	
M1	.120A		1N1763 *	2F4 *	SR200 *	* Silicon Type

SIGNAL DIODES

ITEM No.	ORIG. TYPE	REPLACEMENT DATA				NOTES
		MORROW PART No.	GENERAL ELECTRIC PART No.	RAYTHEON PART No.	SYLVANIA PART No.	
M2	1N295			1N295	1N295	Squelch
M3	1N295			1N295	1N295	Squelch

MISCELLANEOUS

ITEM No.	PART NAME	MORROW PART No.	NOTES
M4	Variable Cap.		
M5	Crystal		Receive (Order by Freq. - Desired) Note 1
M6	Crystal		Receive (Order by Freq. -Desired) Note 1
M7	Crystal		Receive (Order by Freq. -Desired) Note 1
M8	Crystal		Transmit (Order by Freq. -Desired) Note 2
M9	Crystal		Transmit (Order by Freq. -Desired) Note 2
M10	Crystal		Transmit (Order by Freq. -Desired) Note 2
M11	Switch		Channel Selector
M12	Realy	148-014	12V (For 12VDC and 117VAC Versions)
	Relay	148-015	6V (For 6VDC Versions)

Manufacturer recommends military type crystal CR-18U

Note 1. M6 and M7 not used in CB series. To compute crystal frequency, subtract .455 from channel frequency in megacycles and divide by 3.

Note 2. M9 and M10 not used in CB series. To compute crystal frequency divide channel frequency in megacycles by 2.

WIRING DATA

General-use Unshielded Hook-up Wire ..... Use BELDEN No. 8530 (Solid) Available in Ten Colors
8524 (Stranded) Available in Ten Colors

Power Cord ..... Use BELDEN No. 1765-B (6 Ft. Length)
1725-K (7½ Ft. Length)

PHOTOFACT® Folder

RADSON MODELS
RT-70A, RT-75A, RP-115, RP-612

RADSON MODELS
RT-70A, RT-75A, RP-115, RP-612

TRADE NAME	Radson Models RT-70A, RT-75A, RP-115, RP-612
MANUFACTURER	Radson Engineering Corp., Macon, Illinois
TYPE SET	Seven Tube Crystal Controlled 2 Channel Citizens Band Transmitter-Receiver
POWER SUPPLY	Models RT-70A, RP-115: 110-120 Volts AC, 60 Cycles Models RT-75A, RP-612: 6 (or) 12 Volt Storage Battery
RATING	35 Watts, .38 Amp. @117 Volts AC (Receive); 46 Watts, .5 Amp. @117 Volts AC (Transmit) (or) 6 Amp. @6.3 Volts DC (Receive); 8 Amp. @6.3 Volts DC (Transmit) (or) 3 Amp. @12.6 Volts DC (Receive); 4 Amp. @12.6 Volts DC (Transmit)
TUNING RANGE	Any 2 of Citizens Band Channels 1 thru 22

NOTICE

ONLY THOSE PERSONS PROPERLY LICENSED BY FCC ARE PERMITTED TO EFFECT REPAIRS OR MAKE CRYSTAL SUBSTITUTION ON THIS TYPE EQUIPMENT.

HOWARD W. SAMS & CO., INC. Indianapolis 6, Indiana

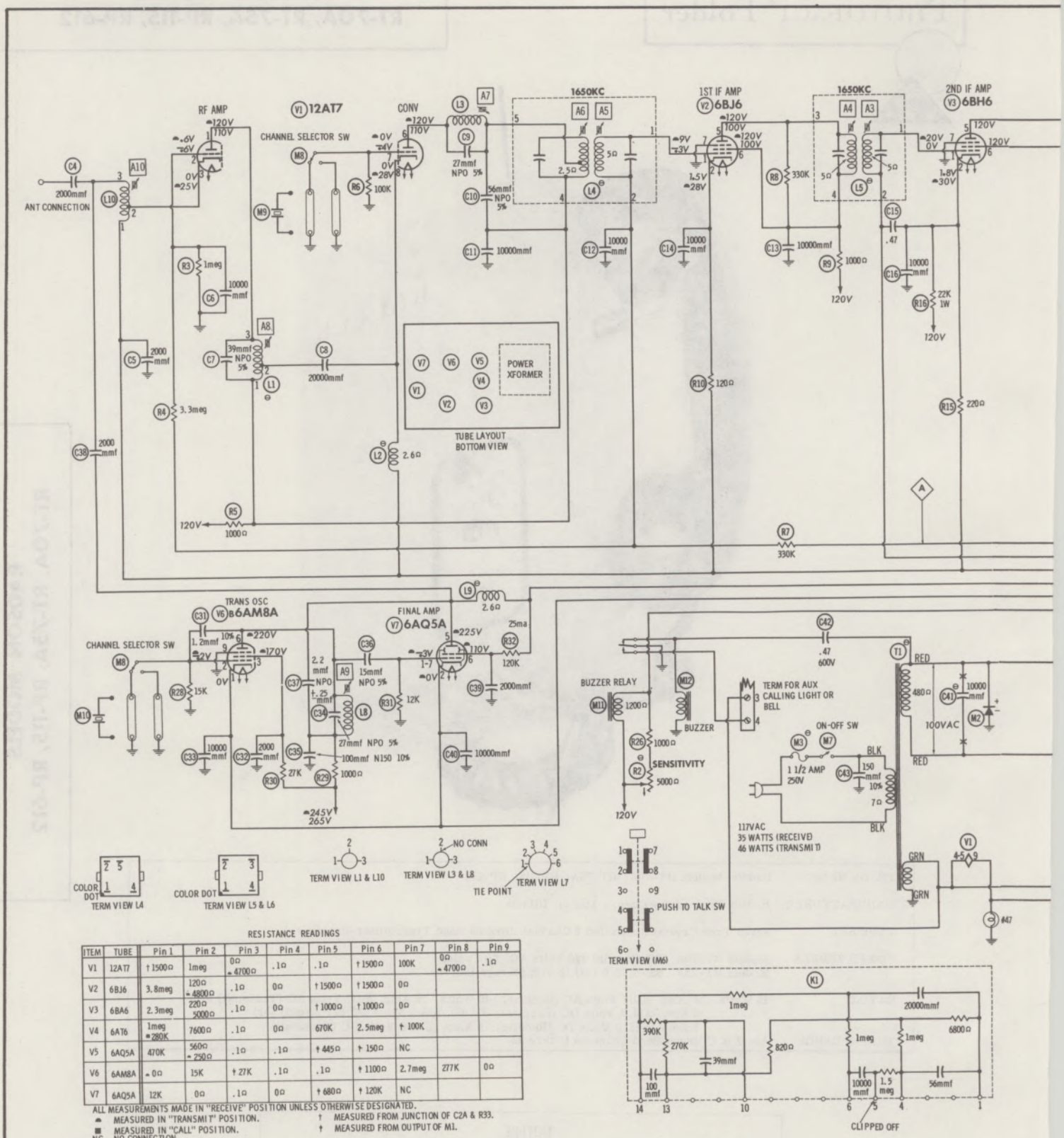

RESISTANCE READINGS

ITEM	TUBE	Pin 1	Pin 2	Pin 3	Pin 4	Pin 5	Pin 6	Pin 7	Pin 8	Pin 9
V1	12AT7	† 1500Ω	1meg	0Ω ▲ 4700Ω	.1Ω	.1Ω	† 1500Ω	100K	0Ω ▲ 4700Ω	.1Ω
V2	6BJ6	3.8meg	120Ω ▲ 4800Ω	.1Ω	0Ω	† 1500Ω	† 1500Ω	0Ω		
V3	6BA6	2.3meg	220Ω 5000Ω	.1Ω	0Ω	† 1000Ω	† 1000Ω	0Ω		
V4	6AT6	1meg ▲ 280K	7600Ω	.1Ω	0Ω	670K	2.5meg	† 100K		
V5	6AQ5A	470K	560Ω ▲ 250Ω	.1Ω	.1Ω	† 445Ω	† 150Ω	NC		
V6	6AM8A	▲ 0Ω	15K	† 27K	.1Ω	.1Ω	† 1100Ω	2.7meg	277K	0Ω
V7	6AQ5A	12K	0Ω	.1Ω	0Ω	† 680Ω	† 120K	NC		

ALL MEASUREMENTS MADE IN "RECEIVE" POSITION UNLESS OTHERWISE DESIGNATED.
▲ MEASURED IN "TRANSMIT" POSITION.
■ MEASURED IN "CALL" POSITION.
NC NO CONNECTION
† MEASURED FROM JUNCTION OF C2A & R33.
† MEASURED FROM OUTPUT OF M1.

NUMBERS ASSIGNED TO COILS, SWITCHES, PLUGS, SOCKETS, AND TRANSFORMERS ARE TO FACILITATE CIRCUIT TRACING OR COMPONENT REPLACEMENT AND MAY NOT NECESSARILY BE FOUND ON THE UNIT.

A PHOTOFACT STANDARD NOTATION SCHEMATIC

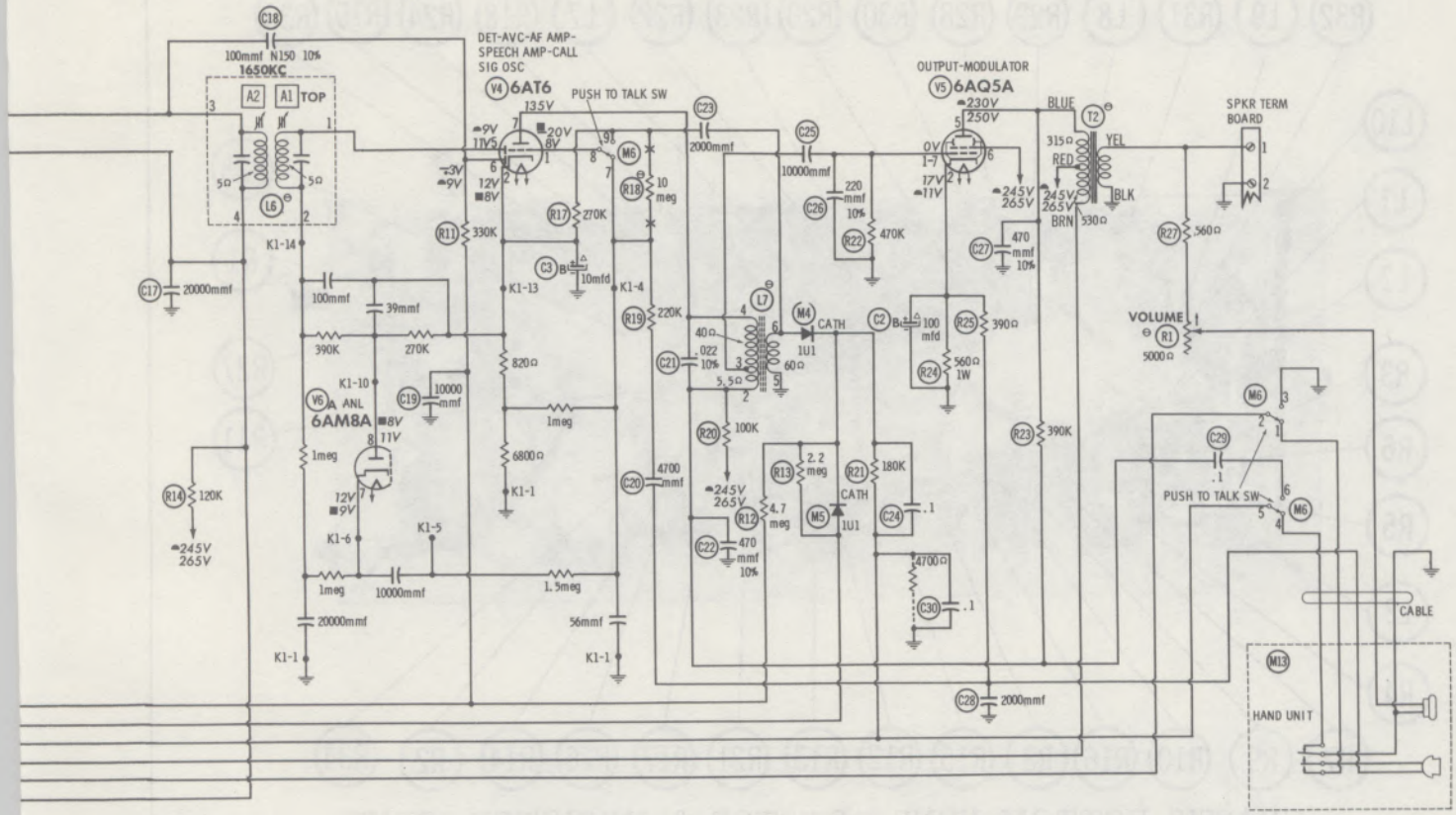

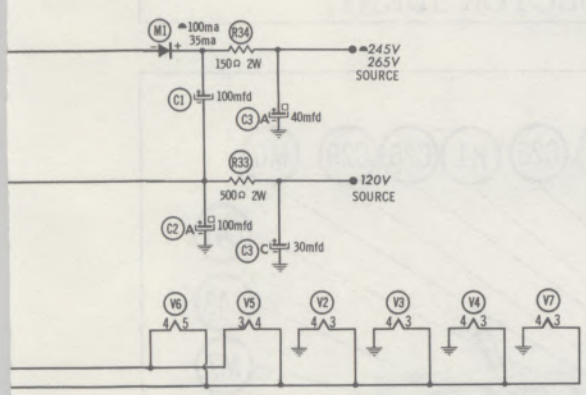

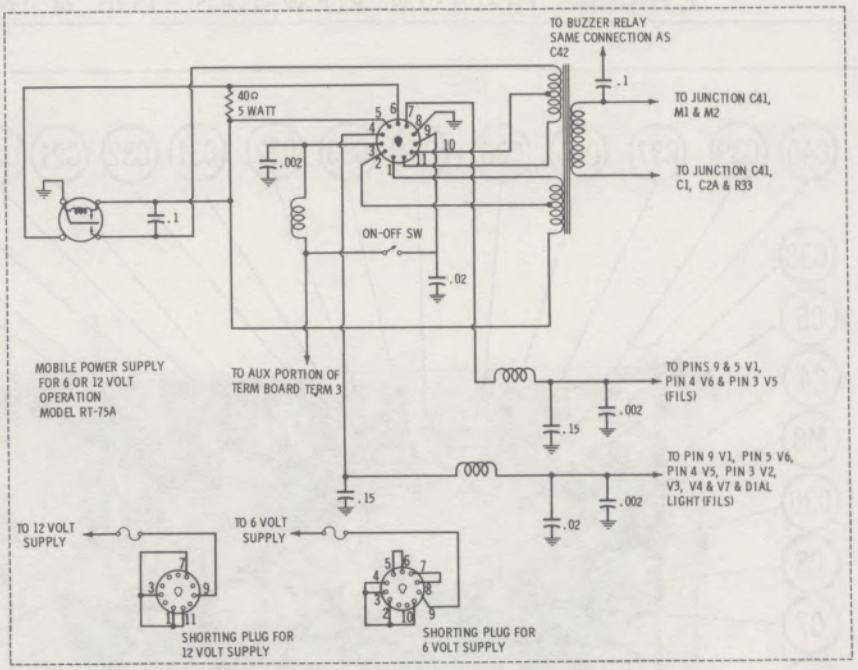

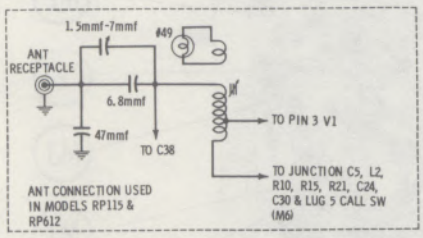

⊖ SEE PARTS LIST FOR ALTERNATE VALUE OR APPLICATION

DC COIL RESISTANCE VALUES UNDER ONE OHM NOT SHOWN ON SCHEMATIC DIAGRAM

ARROWS ON CONTROLS INDICATE CLOCKWISE ROTATION (CONTROL VIEWED FROM SHAFT END)

1. DC voltage measurements taken with vacuum tube voltmeter; AC voltages measured with 1000 ohm per volt voltmeter.
2. Socket connections are shown as bottom views.
3. Measured values are from socket pin to common ground.
4. Line voltage maintained at 117 volts for voltage readings.
5. Nominal tolerance on component values makes possible a variation of ±15% in voltage and resistance readings.
6. Volume control at maximum, no signal applied for voltage measurements.

RADSON MODELS
RT-70A, RT-75A, RP-115, RP-612

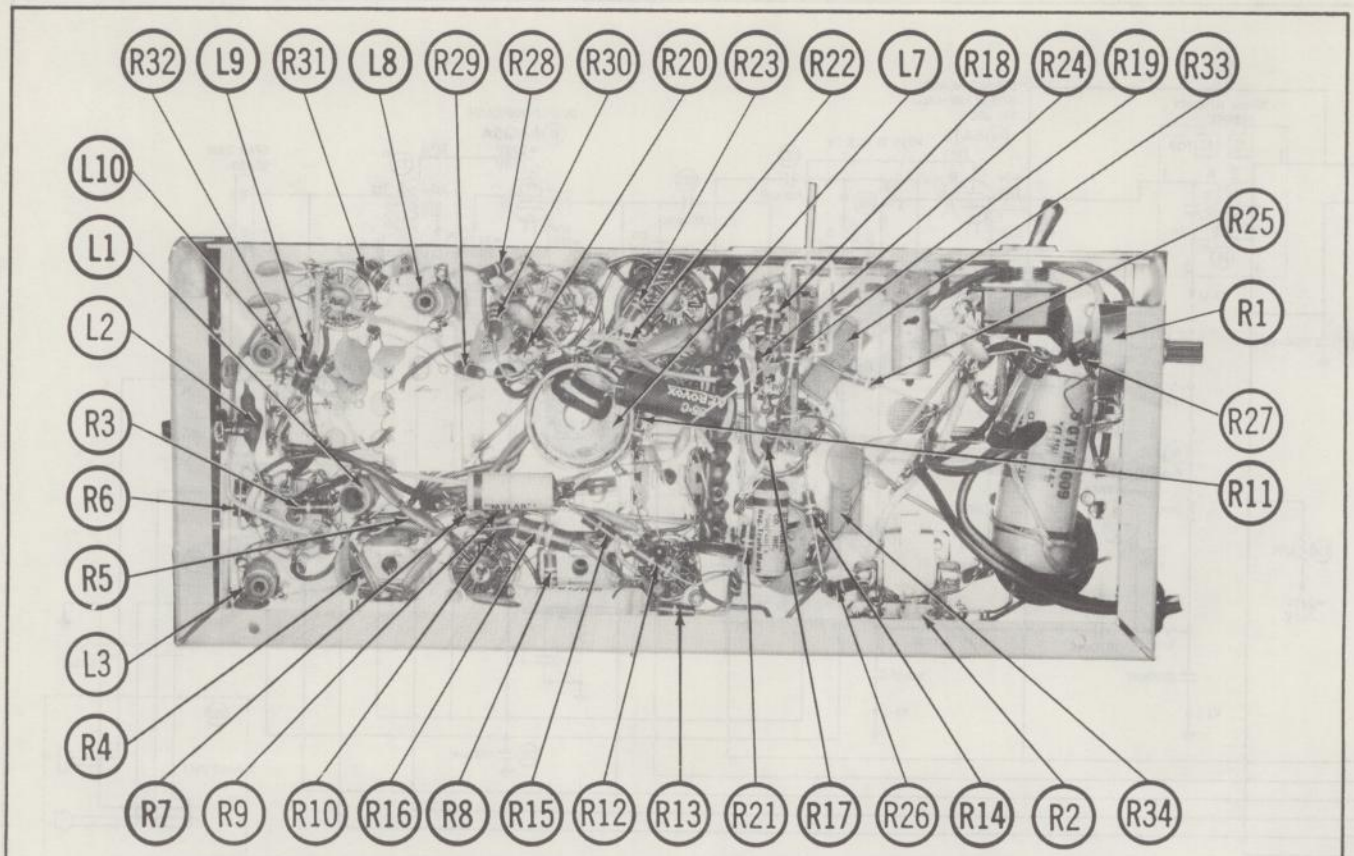

CHASSIS BOTTOM VIEW-RESISTOR & INDUCTOR IDENT.

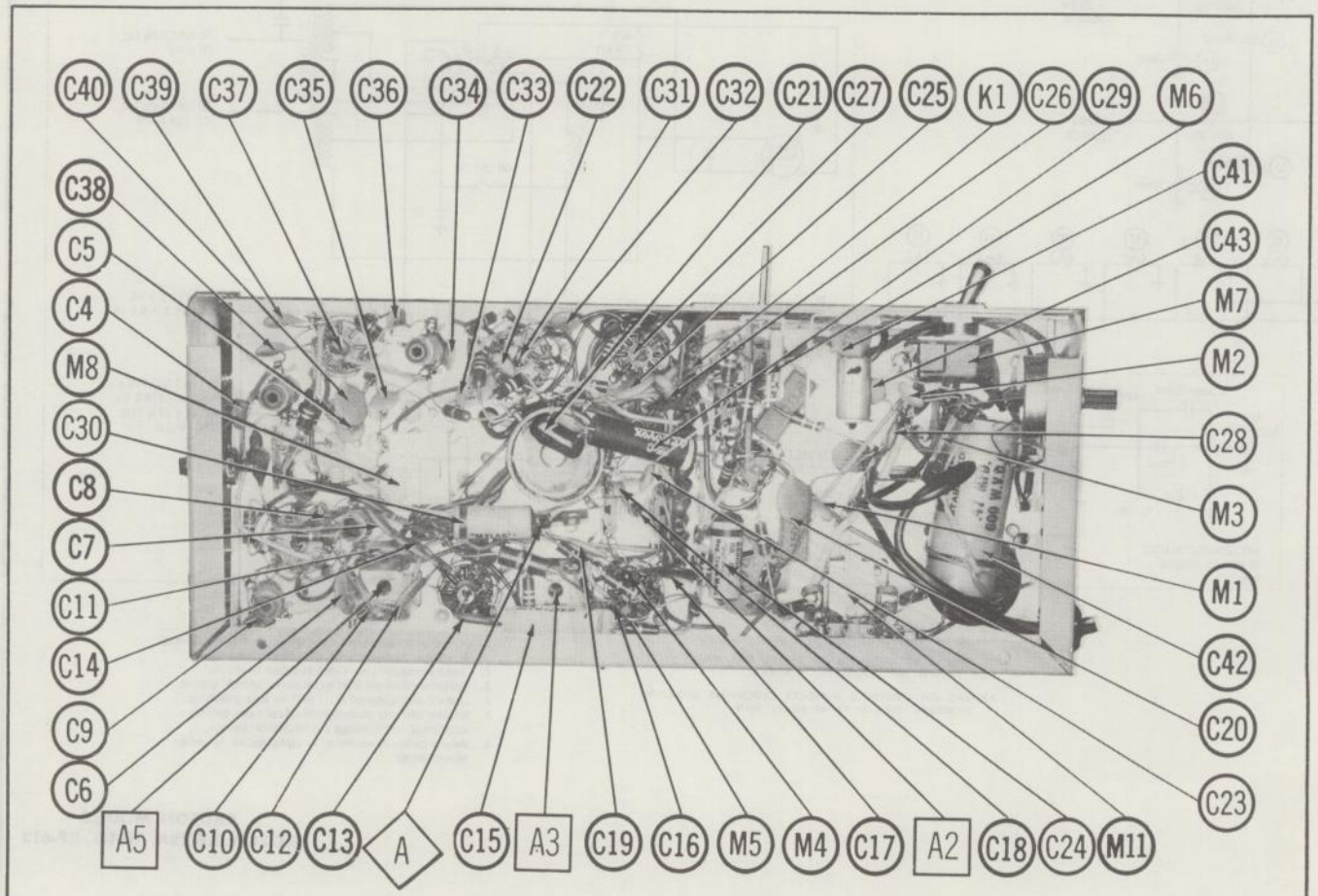

CHASSIS BOTTOM VIEW-ALIGNMENT, CAPACITOR & MISC. IDENT.

PARTS LIST AND DESCRIPTIONS

TUBES

ITEM No.	USE	TYPE	ITEM No.	USE	TYPE
	◆ GENERAL ELECTRIC		◆ RAYTHEON	◆ SYLVANIA	◆
V1	RF Amp. - Conv.	12AT7	V5	Output-Modulator	6AQ5A
V2	1st IF Amplifier	6BJ6	V6	ANL - Trans. Osc.	6AM8A
V3	2nd IF Amplifier	6BH6	V7	Final Amplifier	6AQ5A
V4	Det. -AVC-AF Amp. - Speech Amp. -Call. Sig. Osc.	6AT6			

ELECTROLYTIC CAPACITORS

ITEM No.	RATING CAP.	RATING VOLT.	RADSON PART No.	AEROVOX PART No.	CORNELL-DUBILIER PART No.	MALLORY PART No.	PYRAMID PART No.	SPRAGUE PART No.	NOTES
C1	100	150	10-452-2	AFH1-21	XA0241	FP116	TMS-1240	TVL-1423	
C2A	■100	150	10-452-3	AFH2-24-21	XA0241	FP116	TMD-2145	TVL-1423	
B	▲100	25			BBR100-25	TC2501		TVA-1207	
C3A	■40	300	10-452-1	AFH3-28-30	B0410	FP230. 3	TMD-2475	TVL-2757	
B	▲10	300			BR4035	TC47	TD-40-350	TVA-1611	
C	30	150							

FIXED CAPACITORS

Capacity values given in the rating column are in mfd. for Paper Capacitors, and in mmfd. for Mica and Ceramic Capacitors.

ITEM No.	RATING	REMARKS	AEROVOX PART No.	CENTRALAB PART No.	CORNELL-DUBILIER PART No.	ELMENCO PART No.	MALLORY PART No.	SPRAGUE PART No.
C4	2000		BPD-002	DD-202	BYA10D2	CCD-202	B-220	5HK-D20
C5	2000		BPD-002	DD-202	BYA10D2	CCD-202	B-220	5HK-D20
C6	10000		BPD-01	DD-103	BYA10S1	CCD-103	B-110	5HK-S10
C7	39 NPO 5%			TCZ-39	C10Q39C		CNO-439	10TCC-Q39
C8	20000		BPD-02	DD-203	BYB6S2	CCD-203	B-120	5HK-S20
C9	27 NPO 5%			TCZ-27	C10Q27C		CNO-427	10TCC-Q27
C10	56 NPO 5%			TCZ-56	C10Q56C		CNO-456	10TCC-Q56
C11	10000		BPD-01	DD-103	BYA10S1	CCD-103	B-110	5HK-S10
C12	10000		BPD-01	DD-103	BYA10S1	CCD-103	B-110	5HK-S10
C13	10000		BPD-01	DD-103	BYA10S1	CCD-103	B-110	5HK-S10
C14	10000		BPD-01	DD-103	BYA10S1	CCD-103	B-110	5HK-S10
C15	.47 100V		P488N-47		CUB2P47	IDP-4-474	GEM-2047	2TM-P47
C16	10000		BPD-01	DD-103	BYA10S1	CCD-103	B-110	5HK-S10
C17	20000		BPD-02	DD-203	BYB6S2	CCD-203	B-120	5HK-S20
C18	100 N150 10%					*		10TCP-T10
C19	10000		BPD-01	DD-103	BYA10S1	CCD-103	B-110	5HK-S10
C20	4700		BPD-0047	DD-472	BYA10D47M	CCD-472	B-247	5HK-D47
C21	.022 100V 10%		V84C2S22-10%		PM4S22	IDP-2-223		4TM-S22
C22	470 10%		DI-470	DD-471	5R5T47	CCD-471	GP347	10TS-T47
C23	2000		BPD-002	DD-202	BYA10D2	CCD-202	B-220	5HK-D20
C24	.1 200V		P288N-1	DF-104	CUB2P1	2DP-3-104	GEM-201	2TM-P10
C25	10000		BPD-01	DD-103	BYA10S1	CCD-103	B-110	5HK-S10
C26	220 10%		DI-220	DD-221	L10T22	CCD-221	GP322	10TS-T22
C27	470 10%		DI-470	DD-471	5R5T47	CCD-471	GP347	10TS-T47
C28	2000		BPD-002	DD-202	BYA10D2	CCD-202	B-220	5HK-D20
C29	.1 200V		P288N-1	DF-104	CUB2P1	2DP-3-104	GEM-201	2TM-P10
C30	.1 200V		P288N-1	DF-104	CUB2P1	2DP-3-104	GEM-201	2TM-P10

FIXED CAPACITORS (cont)

ITEM No.	RATING	REMARKS	AEROVOX PART No.	CENTRALAB PART No.	CORNELL-DUBILIER PART No.	ELMENCO PART No.	MALLORY PART No.	SPRAGUE PART No.
C31	1.2 10%		NPO-SI 1.5	DTZ-1R5	C10V15C		CNO-515	10TCC-V12
C32	2000		BPD-002	DD-202	BYA10D2	CCD-202	B-220	5HK-D20
C33	10000		BPD-01	DD-103	BYA10S1	CCD-103	B-110	5HK-S10
C34	27 NPO 5%			TCZ-27	C10Q27C		CNO-427	10TCC-Q27
C35	100 N150 10%					*		10TCP-T10
C36	15 NPO 5%			DTZ-15	C10Q15C		CNO-415	10TCC-Q15
C37	2.2 NPO ± .25mmf		NPO-DI 2.2	DTZ-2R2	C10V22C	CCTO-2R2	CNO-522	10TCC-V22
C38	2000		BPD-002	DD-202	BYA10D2	CCD-202	B-220	5HK-D20
C39	2000		BPD-002	DD-202	BYA10D2	CCD-202	B-220	5HK-D20
C40	10000		BPD-01	DD-103	BYA10S1	CCD-103	B-110	5HK-S10
C41	10000	Note 1	BPD-01	DD-103	BYA10S1	CCD-103	B-110	5HK-S10
C42	.47 600V		P688N-47		WMF6P47E	6DP-6-474	GEM-6047	6TM-P47
C43	150 10%		DI-150	DD-151	L10T15	CCD-151	GP315	10TS-T15

* Not normally in distributor's stock. Available thru distributor on order to manufacturer.
Note 1. Not used in some versions.

CONTROLS

ITEM No.	RATING RESISTANCE	RATING WATTS	RADSON PART No.	CENTRALAB PART No.	CLAROSTAT PART No.	CTS-IRC PART No.	MALLORY PART No.	INSTALLATION NOTES
R1	5000Ω	1/2	10-487-2①	B-12		Q17-114		Volume Sensitivity
R2	5000Ω	1/2	10-487-3②					

① Some versions may use Part #10-487-1.
② Some versions may use Part #10-697-1.

RESISTORS

All wattages 1/2 watt, or less, unless otherwise listed.

ITEM No.	RATING	IRC PART No.	WORKMAN TV PART No.	REMARKS	ITEM No.	RATING	IRC PART No.	WORKMAN TV PART No.	REMARKS
R3	1meg				R19	220K			
R4	3.3meg				R20	100K			
R5	1000Ω				R21	180K			
R6	100K				R22	470K			
R7	330K				R23	390K			
R8	330K				R24	560Ω 1W			
R9	1000Ω				R25	390Ω			
R10	120Ω				R26	1000Ω			
R11	330K				R27	560Ω			
R12	4.7meg				R28	15K			
R13	2.2meg				R29	1000Ω			
R14	120K				R30	27K			
R15	220Ω				R31	12K			
R16	22K 1W				R32	120K			
R17	270K				R33	500Ω 2W			
R18	10meg			Note 1	R34	150Ω 2W			

Note 1. Not used in some versions.

PARTS LIST AND DESCRIPTIONS (Continued)

COMPONENT COMBINATIONS

ITEM No.	USE	DESCRIPTION	RADSON PART No.	REPLACEMENT DATA
K1	Audio Network	39mmf, 56mmf, 100mmf, 10000mmf, 20000mmf, 820Ω, 6800Ω, 270K, 390K, 1meg, 1meg, 1meg, 1.5meg	10-622-1	

COILS (RF-IF)

ITEM No.	USE	REPLACEMENT DATA				NOTES
		RADSON PART No.	Merit PART No.	Miller PART No.	Stancor PART No.	
L1	RF	10-460-2				①Alternate Part #10-022-3 (18uh)
L2	RF Choke(36uh)	10-629-1 ①	TV-180	6176	RTC-8598	② Alternate Part #20-110-2
L3	Conv. Plate	10-460-1	TV-118	6171-A	RTC-8609	③ Alternate Part #20-110-1
L4	1st IF	20-110-4 ②				④ Part #10-462-1, 10-631-2 or 10-631-1 (With C21) may be used.
L5	2nd IF	20-110-3 ③		13-W1	RTC-8686	
L6	3rd IF	20-110-3 ③		13-W1	RTC-8686	
L7	Call Signal Osc.	④				⑤ Alternate Part#10-022-1 (250uh)
L8	Osc. Plate	10-460-1	TV-118	6171-A	RTC-8609	
L9	RF Choke (36uh)	10-629-1 ⑤	TV-180	6176	RTC-8598	
L10	Ant.	10-460-2				

TRANSFORMER (POWER)

ITEM No.	RATING			REPLACEMENT DATA					NOTES
	PRI.	SEC. 1	SEC. 2	RADSON PART No.	Merit PART No.	Stancor PART No.	Thordarson PART No.	Triad PART No.	
T1	117V ⓐ .5A	100V ⓐ .300A AC	12.6V ⓐ 1.3A	B-20-104 ①					① Alternate Part # 20-104-1, Part #20-111-1 used in Battery Operated Models.

TRANSFORMER (AUDIO OUTPUT)

ITEM No.	IMPEDANCE		REPLACEMENT DATA					NOTES
	PRI.	SEC.	RADSON PART No.	Merit PART No.	Stancor PART No.	Thordarson PART No.	Triad PART No.	
T2	11.6K CT	3-4Ω	A-10-463①	A-2936②		22S87		①Alternate Part #10-463-1. ② Use Original Frame.

POWER RECTIFIERS

ITEM No.	RATING	REPLACEMENT DATA				NOTES
	CURRENT (Measured)	RADSON PART No.	RCA PART No.	SARKES TARZIAN PART No.	SYLVANIA PART No.	
M1	.100A	10-526-1	1N1763	2F4	SR200	Silicon Type
M2	.100A	10-526-1	1N1763	2F4	SR200	

FUSES

ITEM No.	TYPE	RATING	REPLACEMENT DATA					
			RADSON PART No.		LITTELFUSE PART No.		BUSS PART No.	
			FUSE	HOLDER	FUSE	HOLDER	FUSE	HOLDER
M3	3AG	1½A 250V P/T	10-736-2 (Note 1)		31801.5 (1½A 250V P/T) 3AG		GJV 1½	

Note 1. 6 volt versions use 14 Amp. and 12 volt versions use 6 Amp. fuse.

SIGNAL DIODES

ITEM No.	ORIG. TYPE	REPLACEMENT DATA				NOTES
		RADSON PART No.	GENERAL ELECTRIC PART No.	RAYTHEON PART No.	SYLVANIA PART No.	
M4	1U1	10-527-1 ♦				♦ Selenium
M5	1U1	10-527-1 ♦				

MISCELLANEOUS

ITEM No.	PART NAME	RADSON PART No.	NOTES
M6	Switch	10-467-1	Push-To-Call (Pushbutton Type, Spring Loaded)
M7	Switch	10-062-1	Power Off-On (Toggle Type)
M8	Switch		Channel Selector (Pushbutton Type)
M9	Crystal		Receive (Order by Channel Desired)
M10	Crystal		Transmit (Order by Channel Desired)
M11	Relay	10-628-1	Buzzer Control
M12	Buzzer	10-633-1 (or) 10-512-1	
M13	Hand Set	20-121-1	Includes Push-To-Talk Switch

WIRING DATA

General-use Unshielded Hook-up Wire ..... Use BELDEN No. 8530 (Solid) Available in Ten Colors
8524 (Stranded) Available in Ten Colors

Power Cord ..... Use BELDEN No. 1765-B (6 Ft. Length)
1725-K (7½ Ft. Length)

ALIGNMENT INSTRUCTIONS

ALIGNMENT INSTRUCTIONS—READ CAREFULLY BEFORE ATTEMPTING ALIGNMENT

Volume control should be at maximum position. Output of signal generator should be no higher than necessary to obtain an output reading.
Suggested Alignment Tools: A1 Thru A10....GENERAL CEMENT #8282, 8606, 8606-L, 9295, 9440
WALSCO #2526, 2543, 2544, 2545

RECEIVER ALIGNMENT

	SIGNAL GENERATOR COUPLING	SIGNAL GENERATOR FREQUENCY	RADIO DIAL SETTING	CONNECT VTVM	ADJUST	REMARKS
1.	High side to antenna terminal. Low side to chassis.	1650KC (400~ 30% Mod.)	Not Used	DC probe to point Ⓐ. Common to chassis.	A1	Adjust for MINIMUM deflection.
2.	"	"		"	A2, A3, A4, A5, A6	Adjust for maximum deflection.
3.	High side thru termination to antenna.	Receiver Frequency		"	A7	Turn clockwise until oscillator ceases, then counterclockwise until oscillation just starts. This should be within 1 turn of maximum AVC voltage as indicated on VTVM.
4.	"	"		"	A8	Adjust for maximum deflection (Use position farthest in which produces maximum).

TRANSMITTER ALIGNMENT

	SIGNAL GENERATOR COUPLING	SIGNAL GENERATOR FREQUENCY	RADIO DIAL SETTING	CONNECT VTVM	ADJUST	REMARKS
5.	Connect a dummy load to the antenna terminal.	Not Used	Not Used	DC probe thru 100K to pin 1 (grid) of Final. Common to chassis.	A9	Adjust for -20 volts.
6.	Connect whip antenna.			Use field strength meter.	A10	Adjust for maximum output. Check transmitter frequency with Frequency meter or crystal calibrated receiver.

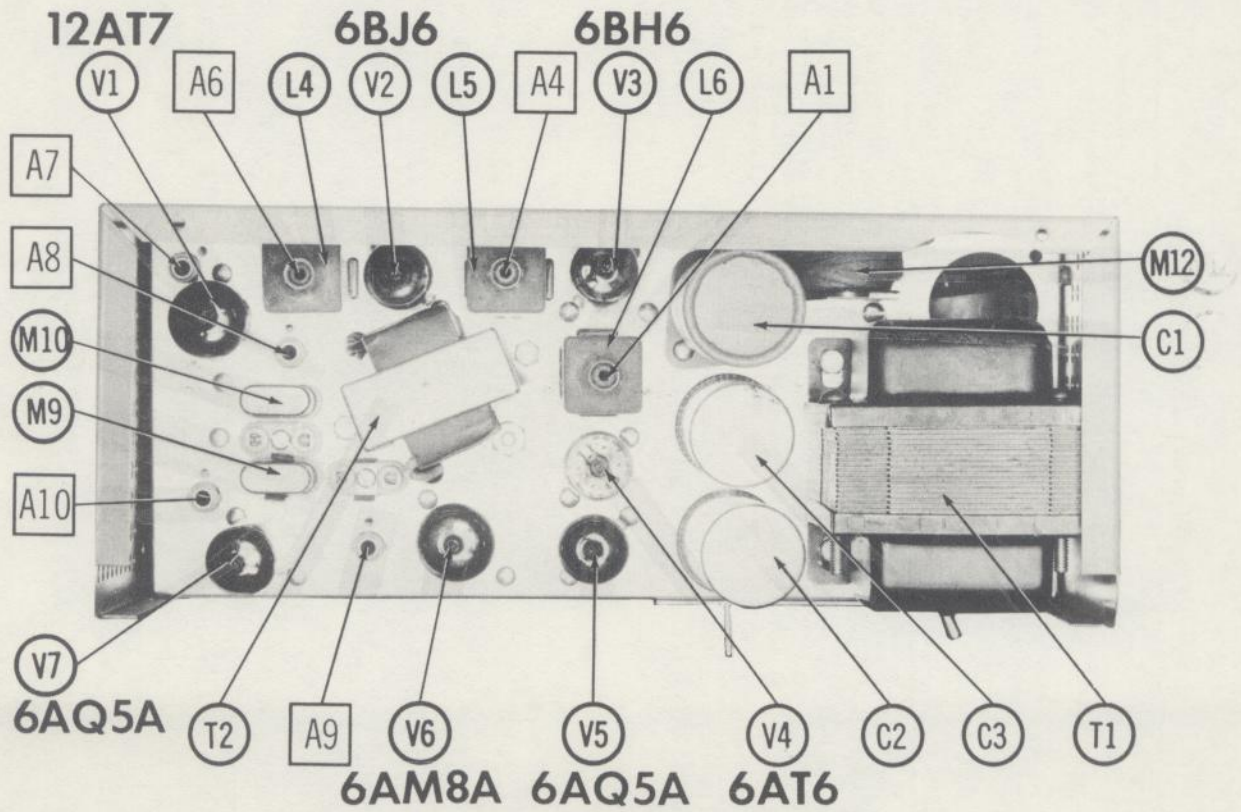

CHASSIS—TOP VIEW

ALIGNMENT INSTRUCTIONS

ALIGNMENT EQUIPMENT—SAG CAPACITY BRIDGE, ATTENUATOR, SIGNAL GENERATOR

Variable frequency signal 1.5 to 8 megacycles (modulation—Output of signal generator should be adjusted to obtain approximately 1 volt on detector).

Signal generator modulation 400 cycles, at 30% AM. Output 3.5 to 8 megacycles, 400 cycles, 30% AM.

Wattmeter 0 to 250, 2500, 2500, 2500.

RECEIVER ALIGNMENT

STEP NO.	SIGNAL GENERATOR CONNECTION	SIGNAL GENERATOR FREQUENCY	RADIO DIAL SETTING	CONNECT TO	ADJUST	REMARKS
1.	High side to antenna terminal. Low side to chassis.	1.6 mc. 400 cycles 30%	Max. freq.	DC voltmeter to antenna. Common to chassis.	A1	Adjust for maximum deflection.
2.	"	"	"	"	A2, A3, A4, A5, A6	Adjust for maximum deflection.
3.	High side to antenna terminal. Low side to chassis.	Secondary IF frequency			A7	Turn receiver and signal generator off. Connect short circuit across secondary. Apply signal generator output. It should be within 1 step of maximum. Adjust as indicated in WARNING.
4.	"	"	"	"	A8	Adjust for maximum deflection (take point of tangent to avoid overload indication).

TRANSMITTER ALIGNMENT

STEP NO.	SIGNAL GENERATOR CONNECTION	SIGNAL GENERATOR FREQUENCY	RADIO DIAL SETTING	CONNECT TO	ADJUST	REMARKS
7.	Antenna terminal to antenna terminal.	Xtal freq.	Max. freq.	DC voltmeter (0-3 volt) (0-3 volt scale) (2500) to 1500 Ω resistor to chassis.	A9	Adjust for .70 volt.
8.	Connect wattmeter.			See block diagram.	A10	Adjust for maximum output. Check transmitter current with 1.5 ampere meter or 2 ampere meter and 1.5 ampere.

PHOTOFACT® Folder

RAYTHEON MODEL RAY-TEL (TWR-1)

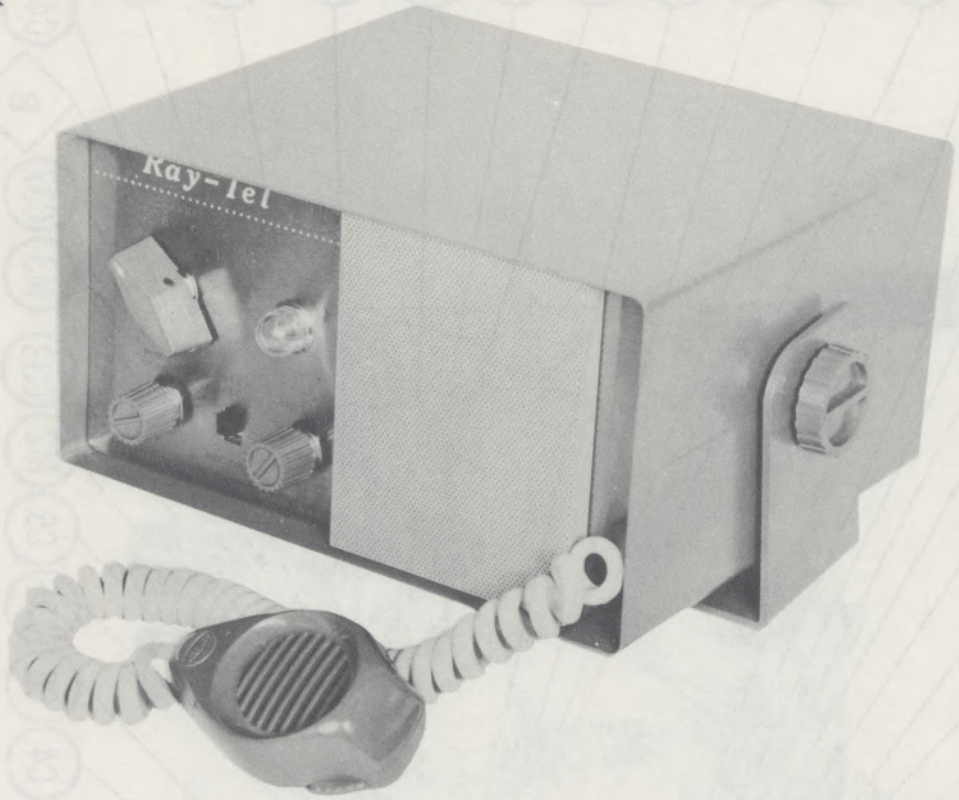

TRADE NAME	Raytheon Model Ray-Tel (TWR-1)
MANUFACTURER	Raytheon Co., Distributor Products Div., 411 Providence Turnpike, Westwood, Mass.
TYPE SET	AC-Battery Operated 8 Tube Crystal Controlled Citizens Band Transmitter – Receiver
POWER SUPPLY	110-120 Volts AC, 60 Cycles (or) 12 Volt Storage Battery
RATING	65 Watts, .6 Amp. @117 Volts AC (or) 5 Amp. @12.6 Volts DC
TUNING RANGE	Any 4 of Citizens Band Channels 1 thru 23

RAYTHEON MODEL RAY-TEL (TWR-1)

NOTICE

ONLY THOSE PERSONS PROPERLY LICENSED BY FCC ARE PERMITTED TO MAKE CRYSTAL SUBSTITUTION OR EFFECT REPAIRS ON THE TRANSMITTER PORTION OF THIS UNIT.

HOWARD W. SAMS & CO., INC. Indianapolis 6, Indiana

KZ485

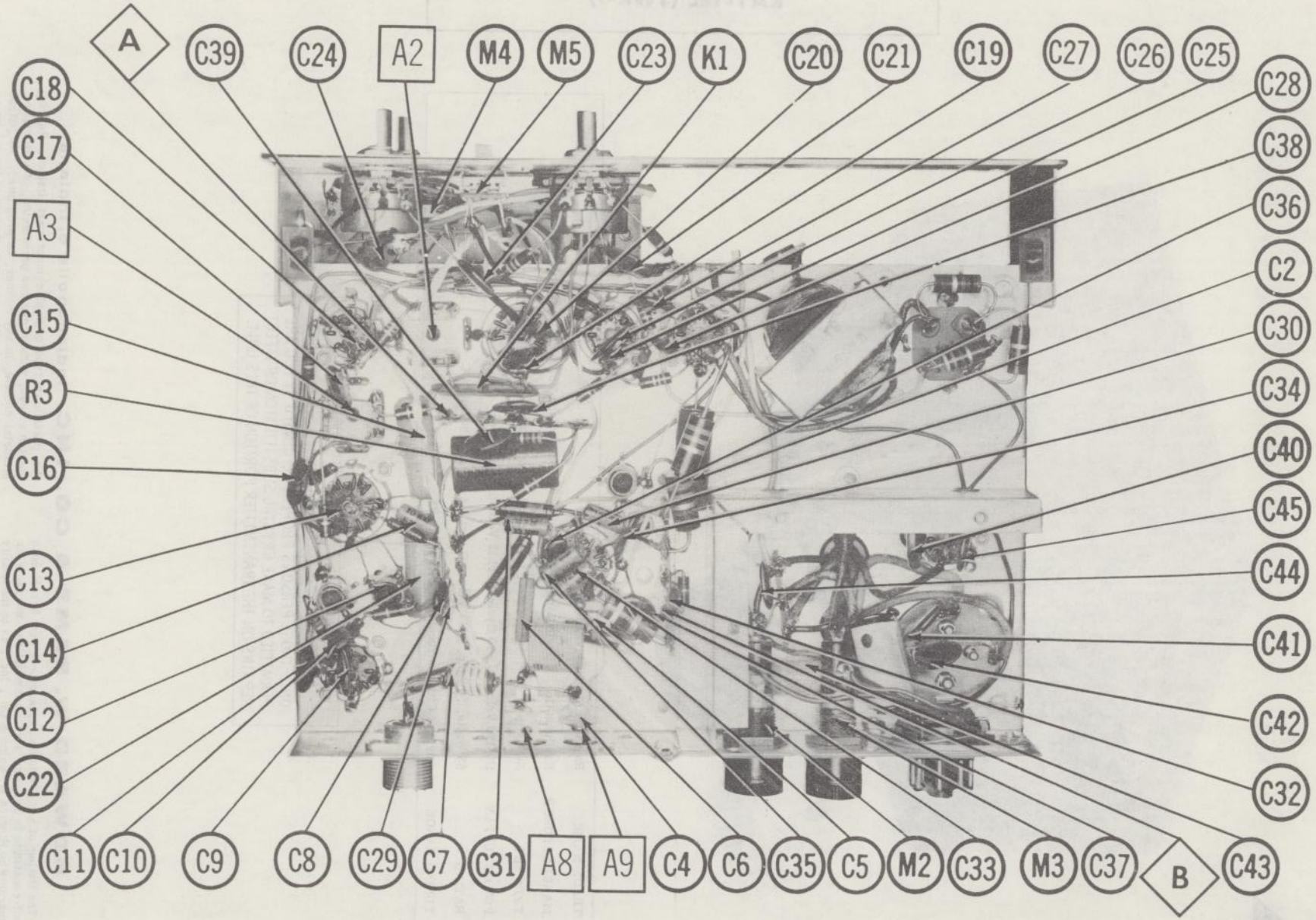

CHASSIS BOTTOM VIEW-ALIGNMENT, CAPACITOR & MISC. IDENT.

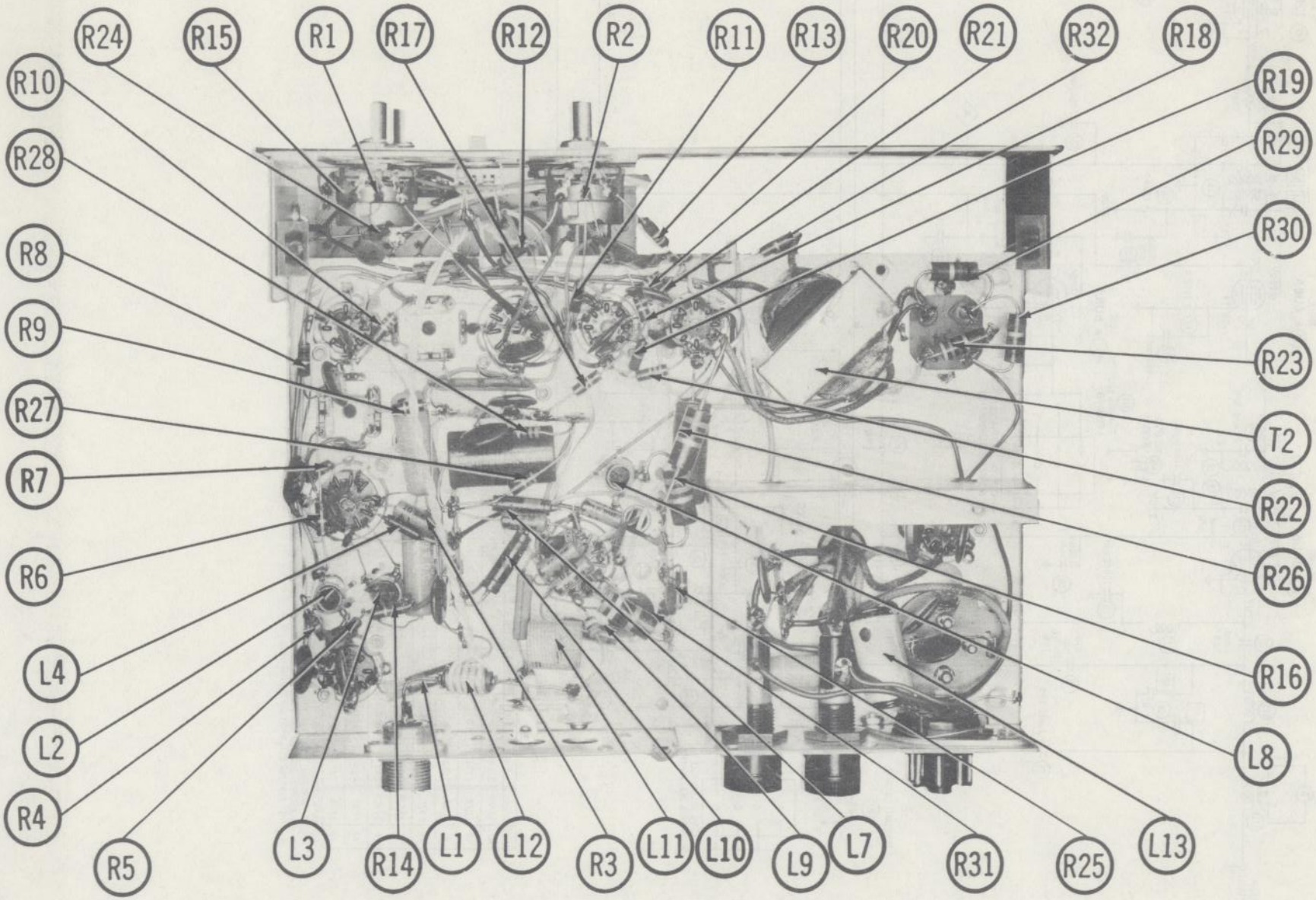

CHASSIS BOTTOM VIEW-RESISTOR & INDUCTOR IDENT.

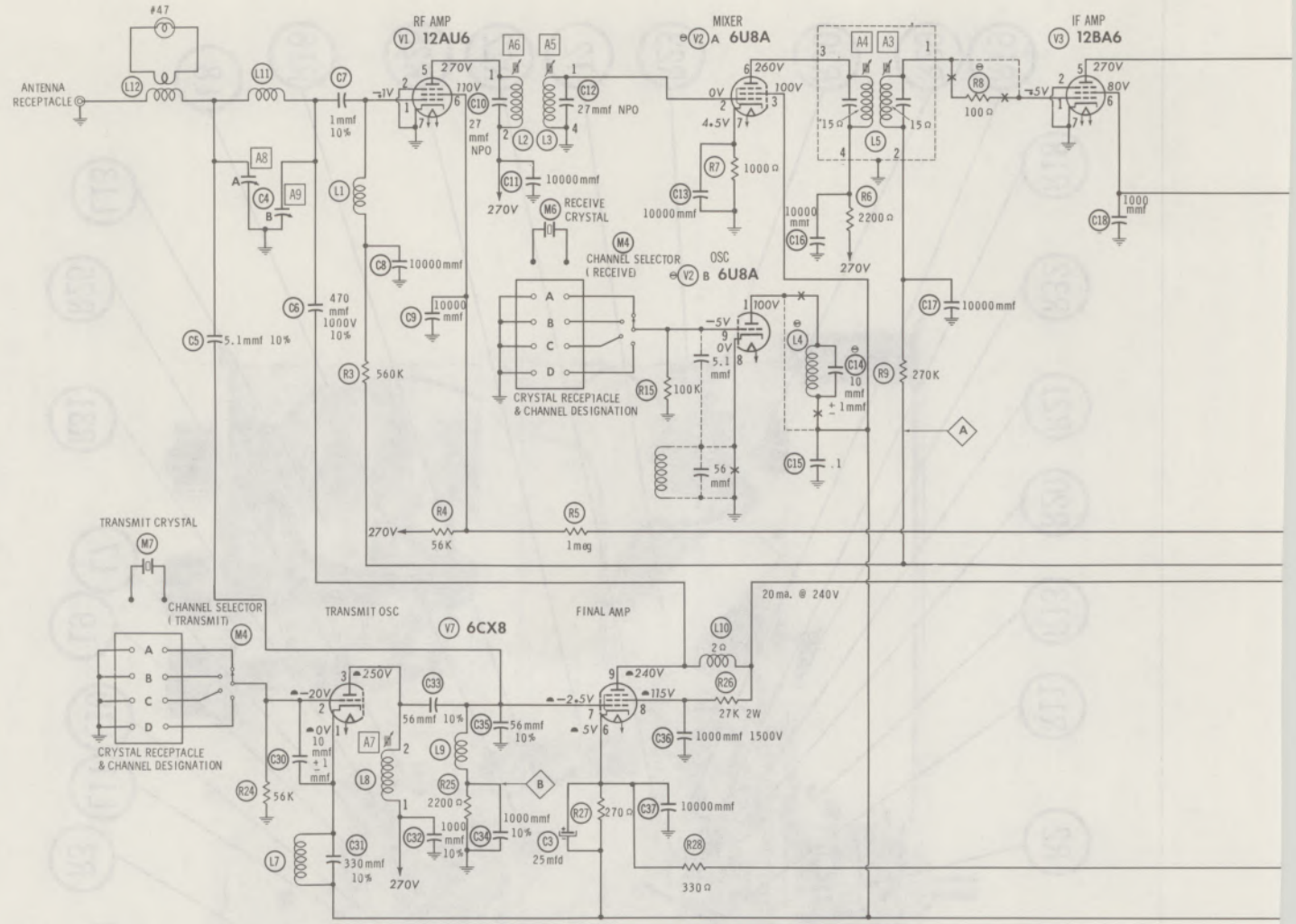

RESISTANCE READINGS

ITEM	TUBE	Pin 1	Pin 2	Pin 3	Pin 4	Pin 5	Pin 6	Pin 7	Pin 8	Pin 9
V1	12AU6	2.1meg	0Ω	0Ω	.1Ω	†200Ω	†56K	0Ω		
V2	6U8A	†27K	.1Ω	†27K	.1Ω	.1Ω	†2400Ω	1000Ω	0Ω	100K
V3	12BA6	1.5meg	0Ω	0Ω	.1Ω	†200Ω	†56K	0Ω		
V4	6BJ7	0Ω	550K	0Ω	.1Ω	0Ω	†2meg	†1.1meg	270K	2.6meg
V5	12CR6	0Ω	NC	0Ω	.1Ω	†270K	†1meg	2.2meg		
V6	12AQ5	560K	470Ω	0Ω	.1Ω	†460Ω	†200Ω	560K		
V7	6CX8	◓0Ω	56K	◓†200Ω	.1Ω	.1Ω	◓270Ω	2200Ω	†27K	†460Ω
V8	12X4	225Ω	NC	.1Ω	0Ω	NC	210Ω	¶		

ALL MEASUREMENTS MADE IN "RECEIVE" POSITION UNLESS OTHERWISE DESIGNATED.
◓ MEASURED IN "TRANSMIT" POSITION.
† MEASURED FROM PIN 7 OF V8.
NC NO CONNECTION
¶ THIS READING WILL VARY DEPENDING UPON THE CONDITION OF THE ELECTROLYTIC IN THE CIRCUIT.

A PHOTOFACT STANDARD NOTATION SCHEMATIC

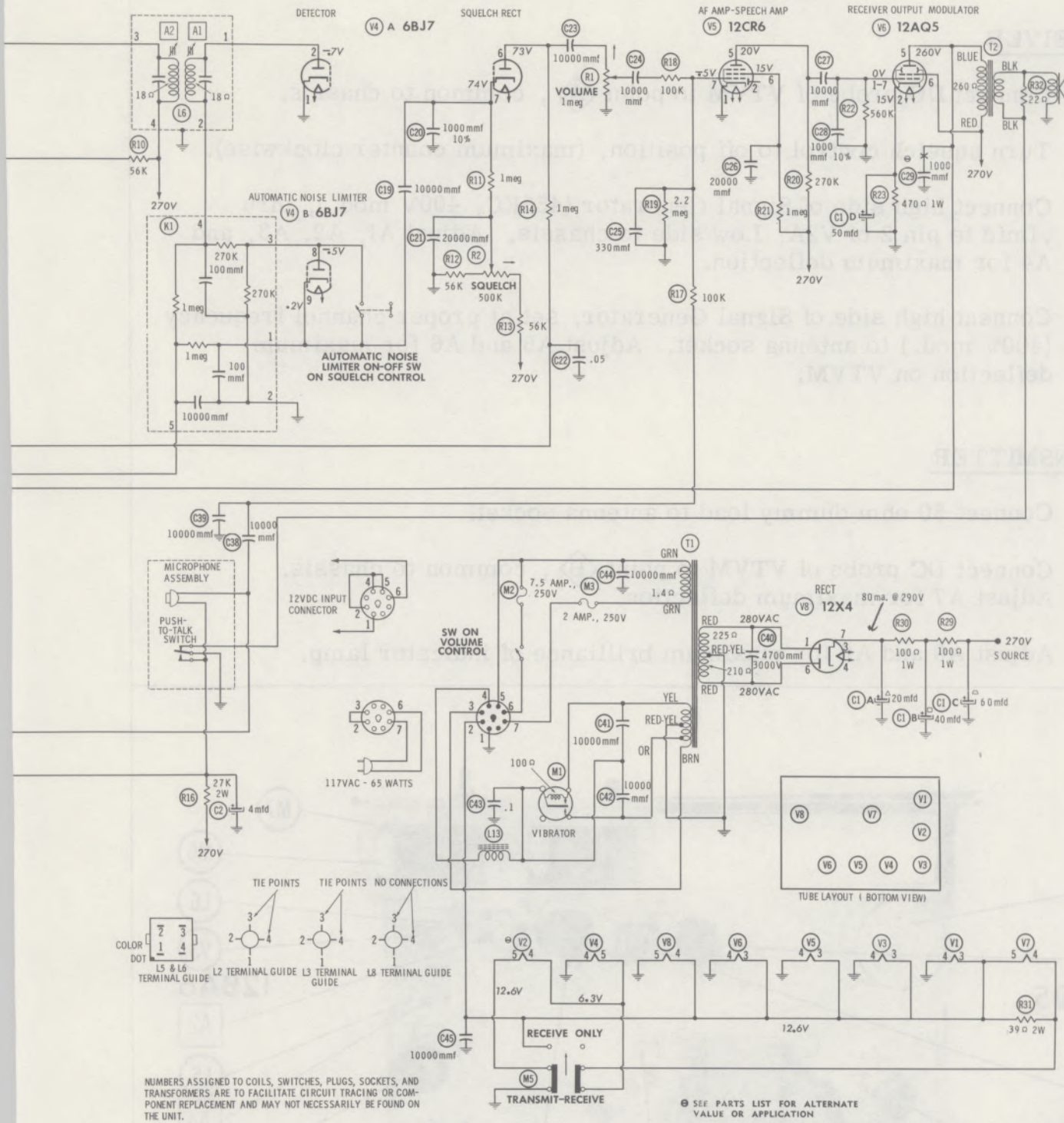

NUMBERS ASSIGNED TO COILS, SWITCHES, PLUGS, SOCKETS, AND TRANSFORMERS ARE TO FACILITATE CIRCUIT TRACING OR COMPONENT REPLACEMENT AND MAY NOT NECESSARILY BE FOUND ON THE UNIT.

⊖ SEE PARTS LIST FOR ALTERNATE VALUE OR APPLICATION

DC COIL RESISTANCE VALUES UNDER ONE OHM NOT SHOWN ON SCHEMATIC DIAGRAM

ARROWS ON CONTROLS INDICATE CLOCKWISE ROTATION (CONTROL VIEWED FROM SHAFT END)

1. DC voltage measurements taken with vacuum tube voltmeter; AC voltages measured with 1000 ohm per volt voltmeter.
2. Socket connections are shown as bottom views.
3. Measured values are from socket pin to common ground.
4. Line voltage maintained at 117 volts for voltage readings.
5. Nominal tolerance on component values makes possible a variation of ±15% in voltage and resistance readings.
6. Volume control at maximum, no signal applied for voltage measurements.

RAYTHEON MODEL RAY-TEL (TWR-1)

ALIGNMENT INSTRUCTIONS

RECEIVER

1. Connect DC probe of VTVM to point Ⓐ, common to chassis.

   Turn squelch control to off position, (maximum counter clockwise).

   Connect high side of Signal Generator (455KC, 400∿ mod.), thru .1mfd to pin 2 of V2A, Low side to chassis. Adjust A1, A2, A3, and A4 for maximum deflection.

2. Connect high side of Signal Generator, set at proper channel frequency (400∿ mod.) to antenna socket. Adjust A5 and A6 for maximum deflection on VTVM.

TRANSMITTER

1. Connect 50 ohm dummy load to antenna socket.

   Connect DC probe of VTVM to point Ⓑ, common to chassis. Adjust A7 for maximum deflection.

   Adjust A8 and A9 for maximum brilliance of indicator lamp.

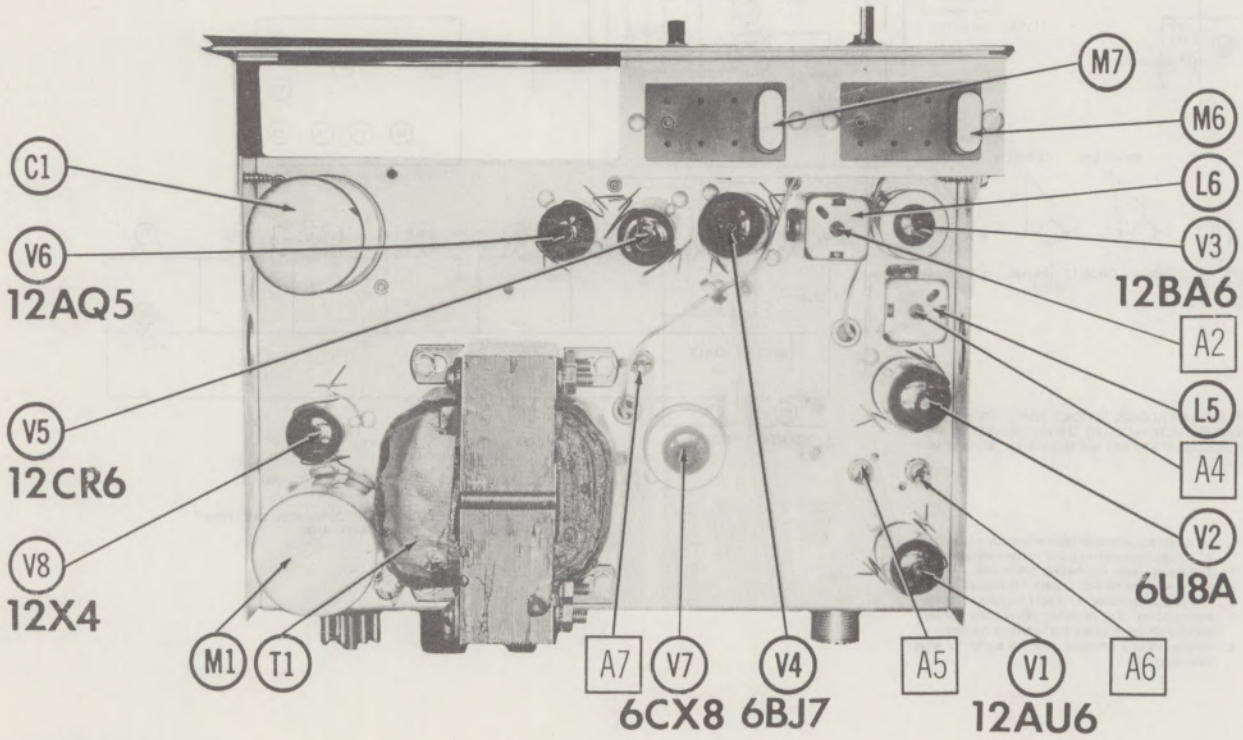

CHASSIS TOP VIEW

PARTS LIST AND DESCRIPTIONS

TUBES

ITEM No.	USE	TYPE	ITEM No.	USE	TYPE
	◆ GENERAL ELECTRIC ◆			RAYTHEON ◆ SYLVANIA ◆	
V1	RF Amplifier	12AU6	V5	AF Amp. -Speech Amp.	12CR6
V2	Mixer - Osc.	6U8A (6U8) *	V6	Receiver Output-Modulator	12AQ5
V3	IF Amplifier	12BA6	V7	Trans. Osc. -Final Amp.	6CX8
V4	Det. -ANL-Squelch Rect.	6BJ7	V8	Rectifier	12X4

* Alternate

ELECTROLYTIC CAPACITORS

ITEM No.	RATING CAP.	RATING VOLT.	RAYTHEON PART No.	AEROVOX PART No.	CORNELL-DUBILIER PART No.	MALLORY PART No.	PYRAMID PART No.	SPRAGUE PART No.	NOTES
C1A	▲20	300		AFH4-46	D0380	FP419.7	TMQ-4140	TVL-4631	
B	■40	300							
C	●60	300							
D	50	25							
C2	4	150		PRS1400	BBR4-150	TT150X4	TD-4-150	TVA-1402	
C3	25	50		PRS1340	BBR25-50	TC36	TD-25-50	TVA-1306	

FIXED CAPACITORS

Capacity values given in the rating column are in mfd. for Paper Capacitors, and in mmfd. for Mica and Ceramic Capacitors.

ITEM No.	RATING	REMARKS	AEROVOX PART No.	CENTRALAB PART No.	CORNELL-DUBILIER PART No.	ELMENCO PART No.	MALLORY PART No.	SPRAGUE PART No.
C4A		#461-466						
B								
C5	5.1 10%	#VCM20B471M	NPO-SI 5.0	TCZ-4R7	C10V5C	CCTO-050		10TCC-V50
C6	470 1000V 10%					VCM-20-471M		
C7	1 10%		NPO-SI 1.0	TCZ-1			CNO-510	10TCC-V10
C8	10000		BPD-01	DD-103	BYA10S1	CCD-103	B-110	5HK-S10
C9	10000		BPD-01	DD-103	BYA10S1	CCD-103	B-110	5HK-S10
C10	27 NPO		NPO-DI 25	TCZ-27	C10Q27C	CCTO-270	CNO-427	10TCC-Q27
C11	10000		BPD-01	DD-103	BYA10S1	CCD-103	B-110	5HK-S10
C12	27 NPO		NPO-DI 25	TCZ-27	C10Q27C	CCTO-270	CNO-427	10TCC-Q27
C13	10000		BPD-01	DD-103	BYA10S1	CCD-103	B-110	5HK-S10
C14	10 + 1mmf	Note 1	NPO-SI 10	TCZ-10	C10Q1C	CCTO-100	CNO-410	10TCC-Q10
C15	.1 200V		P288N-1	DF-104	CUB2P1	2DP-3-104	GEM-201	2TM-P10
C16	10000		BPD-01	DD-103	BYA10S1	CCD-103	B-110	5HK-S10
C17	10000		BPD-01	DD-103	BYA10S1	CCD-103	B-110	5HK-S10
C18	1000		BPD-001	DD-102	BYA10D1	CCD-102	B-210	5HK-D10
C19	10000		BPD-01	DD-103	BYA10S1	CCD-103	B-110	5HK-S10
C20	1000 10%		DI-1000	DD-102	5R5D1	CCD-102	GP210	10TS-D10
C21	20000		BPD-02	DD-203	BYB6S2	CCD-203	B-120	5HK-S20
C22	.05 200V		P288N-05	DD-503	CUB2S5	4DP-3-503	GEM-415	2TM-S50
C23	10000		BPD-01	DD-103	BYA10S1	CCD-103	B-110	5HK-S10
C24	10000		BPD-01	DD-103	BYA10S1	CCD-103	B-110	5HK-S10
C25	330		DI-330	DD-331	L10T33	CCD-331	B-333	10TS-T33
C26	20000		BPD-02	DD-203	BYB6S2	CCD-203	B-120	5HK-S20
C27	10000		BPD-01	DD-103	BYA10S1	CCD-103	B-110	5HK-S10
C28	1000 10%		DI-1000	DD-102	5R5D1	CCD-102	GP210	10TS-D10
C29	1000	Note 1	BPD-001	DD-102	BYA10D1	CCD-102	B-210	5HK-D10
C30	10 + 1mmf		NPO-SI 10	TCZ-10	C10Q10C	CCTO-100	CNO-410	10TCC-Q10
C31	330 10%		DI-330	DD-331	L10T33	CCD-331	GP333	10TS-T33
C32	1000 10%		DI-1000	DD-102	5R5D1	CCD-102	GP210	10TS-D10
C33	56 10%		NPO-SI 56	D6-560	L10Q56	CCD-560	GP456	10TS-Q56
C34	1000 10%		DI-1000	DD-102	5R5D1	CCD-102	GP210	10TS-D10
C35	56 10%		NPO-SI 56	D6-560	L10Q56	CCD-560	GP456	10TS-Q56
C36	1000 1500V		HVD15-1000	DD30-102	HVB16D1	3CCD-102	2HV-210	30GA-D10
C37	10000		BPD-01	DD-103	BYA10S1	CCD-103	B-110	5HK-S10
C38	10000		BPD-01	DD-103	BYA10S1	CCD-103	B-110	5HK-S10
C39	10000		BPD-01	DD-103	BYA10S1	CCD-103	B-110	5HK-S10
C40	4700 3000V			DD30-472		3CCD-502	3HV-247	30GA-D47
C41	10000		BPD-01	DD-103	BYA10S1	CCD-103	B-110	5HK-S10

FIXED CAPACITORS (cont)

ITEM No.	RATING	REMARKS	AEROVOX PART No.	CENTRALAB PART No.	CORNELL-DUBILIER PART No.	ELMENCO PART No.	MALLORY PART No.	SPRAGUE PART No.
C42	10000		BPD-01	DD-103	BYA10S1	CCD-103	B-110	5HK-S10
C43	.1 200V		P288N-1	DF-104	CUB2P1	2DP-3-104	GEM-201	2TM-P10
C44	10000		BPD-01	DD-103	BYA10S1	CCD-103	B-110	5HK-S10
C45	10000		BPD-01	DD-103	BYA10S1	CCD-103	B-110	5HK-S10

\# Raytheon Part Number.
Note 1. Not used in some versions.

CONTROLS

ITEM No.	RATING RESISTANCE	RATING WATTS	RAYTHEON PART No.	CENTRALAB PART No.	CLAROSTAT PART No.	CTS-IRC PART No.	MALLORY PART No.	INSTALLATION NOTES
R1A	1meg	½	G-45	B-70-S	A47-1meg-S	Q13-137	U53	Volume
B	Shaft			Not Req.	FS-3	Not Req.	Not Req.	
C	Switch			Not Req.	SWE-12	76-1	US-26	Power Off-On
R2A	500K	½	VF-45	B-59	A47-500K-S	Q11-133	U50	Squelch
B	Shaft			Not Req.	FS-3	Not Req.	Not Req.	
C	Switch			KR-2	SWE-20	76-2	US-27	ANL Off-On

RESISTORS

All wattages 1/2 watt, or less, unless otherwise listed.

ITEM No.	RATING	REPLACEMENT DATA IRC PART No.	WORKMAN TV PART No.	REMARKS
R3	560K			
R4	56K			
R5	1meg			
R6	2200Ω			
R7	1000Ω			
R8	100Ω			Note 1
R9	270K			
R10	56K			
R11	1meg			
R12	56K			
R13	56K			
R14	1meg			
R15	100K			
R16	27K 2W			
R17	100K			

ITEM No.	RATING	REPLACEMENT DATA IRC PART No.	WORKMAN TV PART No.	REMARKS
R18	100K			
R19	2.2meg			
R20	270K			
R21	1meg			
R22	560K			
R23	470Ω 1W			
R24	56K			
R25	2200Ω			
R26	27K 2W			
R27	270Ω			
R28	330Ω			
R29	100Ω 1W			
R30	100Ω 1W			
R31	39Ω 2W			
R32	22Ω			

Note 1. Not used in some versions.

COILS (RF-IF)

ITEM No.	USE	RAYTHEON PART No.	Merit PART No.	Miller PART No.	Stancor PART No.	Workman TV PART No.	NOTES
L1	RF Choke (5.6uh)	TL-70	SW-631	4609	RTC-8519	T959	① Not used in some versions.
L2	RF Pri	TL-91	TV-118	6171-A	RTC-8609	T216	
L3	RF Sec	TL-91	TV-118	6171-A	RTC-8609	T216	
L4	RF Choke (1.5uh)	TL-68 ①	BC-562	4604	RTC-8516	T856	
L5	Input IF	TL-34	BC-352	12-C1	RTC-8632	T607	
L6	Output IF	TL-35	BC-353	12-C2	RTC-8633	T608	
L7	RF Choke (5.6uh)	TL-70	SW-631	4609	RTC-8519	T959	
L8	Osc. Plate	TL-91	TV-118	6171-A	RTC-8609	T216	
L9	RF Choke (5.6uh)	TL-70	SW-631	4609	RTC-8519	T959	
L10	RF Choke (15uh)	TL-69		4624	RTC-8524	T862	
L11	Final Plate	TL-93					
L12	Ant. Loading	TL-92					
L13	Hash Choke (46uh)	TL-72		7825-8			

PARTS LIST AND DESCRIPTIONS (Continued)

TRANSFORMER (POWER)

ITEM No.	RATING			REPLACEMENT DATA					NOTES
	PRI.	SEC. 1	SEC. 2	RAYTHEON PART No.	Merit PART No.	Stancor PART No.	Thordarson PART No.	Triad PART No.	
T1	117V @ .6A(AC) 12.6VCT @ 3A(DC)	560VCT @ .080A DC	12.6V @ 1.6A (AC)	ST-102					

TRANSFORMER (AUDIO OUTPUT)

ITEM No.	IMPEDANCE		REPLACEMENT DATA					NOTES
	PRI.	SEC.	RAYTHEON PART No.	Merit PART No.	Stancor PART No.	Thordarson PART No.	Triad PART No.	
T2	6200Ω	3-4Ω	ST-19			24S05	S-63X	

SPEAKER

ITEM No.	TYPE			REPLACEMENT DATA		NOTES
	SIZE	FIELD	V. C. IMP.	RAYTHEON PART No.	QUAM PART No.	
SP1	4"	PM	3-4Ω	P4VA-NW	4A1	

COMPONENT COMBINATIONS

ITEM No.	USE	DESCRIPTION	RAYTHEON PART No.	REPLACEMENT DATA
K1	ANL-Squelch Network	(2) 100mmf, 10000mmf, (2) 270K, (2) 1meg	59-4719	

VIBRATOR

ITEM No.	TYPE	INPUT VOLTS	FRE-QUENCY	REPLACEMENT DATA				NOTES
				RAYTHEON PART No.	CORNELL-DUBILIER PART No.	MALLORY PART No.	RADIART PART No.	
M1	Interrupter	12.6	115~	G-1601	6301	G1601	6301	

FUSES

ITEM No.	TYPE	RATING	REPLACEMENT DATA					
			RAYTHEON PART No.		LITTELFUSE PART No.		BUSS PART No.	
			FUSE	HOLDER	FUSE	HOLDER	FUSE	HOLDER
M2	3AG	7.5A 250V	AGC 7½		31207.5 (3AG 7½A 250V)	342001	AGC 7½	HKP
M3	3AG	2A 250V	AGC 2		312003 (3AG 2A 250V)	342001	AGC 2	HKP

MISCELLANEOUS

ITEM No.	PART NAME	RAYTHEON PART No.	NOTES
M4	Switch	F-49	Channel Selector (Rotary Wafer)
M5	Switch	SW-726	Receive-Transmit (DPDT Slide Type)
M6	Crystal		Receive
M7	Crystal		Transmit

CABINETS & CABINET PARTS

(When Ordering Cabinets & Cabinet Parts, Specify Model, Chassis & Color)

NAME	PART NO.	DESCRIPTION
Lens	147-10	Clear Lucite
Knob	101TB270	Channel Selector
Knob	105P-T3270	Volume, Squelch

WIRING DATA

General-use Unshielded Hook-up Wire ..... Use BELDEN No. 8530 (Solid) Available in Ten Colors
8524 (Stranded) Available in Ten Colors

Power Cord ..... Use BELDEN No. 1765-B (6 Ft. Length)
1725-K (7½ Ft. Length)

PHOTOFACT® Folder

RCA MODEL CRM-P2B-5 (MI-555528, MI-555529)

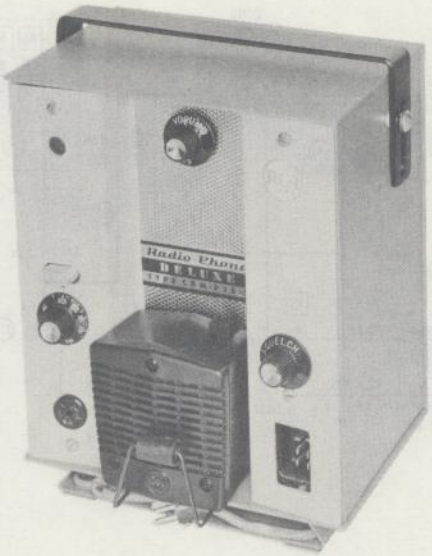

TRADE NAME	RCA Model CRM-P2B-5 (MI-555528, 6 Volt) (MI-555529, 12 Volt)
MANUFACTURER	Radio Corp. of America, Communication Products Dept., Radiomarine Marketing, Camden, N. J.
TYPE SET	AC - Battery Operated 7 Tube Crystal Controlled Citizens Band Transmitter-Receiver
POWER SUPPLY	110 — 120 Volts AC, 60 Cycles (or) 12 Volt Storage Battery (some versions operate on 110-120 volts AC, 60 cycles (or) 6 volt storage battery)
RATING	52 Watts, .5 Amp. @117 Volts AC (or) 3.2 Amp. @12.6 Volts DC
FREQ. RANGE	Any one of Citizens Band Channels 1 thru 23 (Receiver is tunable if crystal is removed)

NOTICE

ONLY THOSE PERSONS PROPERLY LICENSED BY FCC ARE PERMITTED TO MAKE CRYSTAL SUBSTITUTION OR EFFECT REPAIRS ON THE TRANSMITTER PORTION OF THIS UNIT.

ALIGNMENT INSTRUCTIONS

RECEIVER

Turn squelch control to maximum counter-clockwise position.

1. Connect DC probe of VTVM to point Ⓐ, common to chassis.

   Connect high side of Signal Generator (1650KC, 400~ Mod.) thru .001mfd to pin 7 of V2, low side to chassis. Adjust A1, A2, A3, A4, A5 and A6 for maximum deflection.

2. Connect high side of Signal Generator to antenna socket, low side to chassis. Adjust for proper channel frequency (400~ Mod.). Adjust A7 for maximum deflection.

   Remove receiver oscillator crystal.

3. Set Signal Generator to channel 1 (26.965mc). Set tuning capacitor (M7) for maximum capacitance. Adjust A8 for maximum deflection. Check to see if the tuning range covers all 22 channels, if not, make compromise adjustment of A8.

TRANSMITTER

1. Connect DC probe of VTVM through 100K to point Ⓑ, low side to chassis. With the antenna disconnected, adjust A9 for maximum deflection.

   Adjust A10 for minimum plate current.

   Adjust A11 to approximately 3/4 of maximum capacity.

   The voltage at point Ⓑ should be noted when A10 is tuned through resonance. Adjust A12 for minimum variation in grid voltage with the tuning of A10. When properly neutralized, the variation should not cause the grid voltage to be less than -5 volts.

   Connect antenna, readjust A10 for minimum plate current. Readjust A9 to set transmitter exactly on frequency.

RCA MODEL CRM-P2B-5 (MI-555528, MI-555529)

HOWARD W. SAMS & CO., INC. Indianapolis 6, Indiana

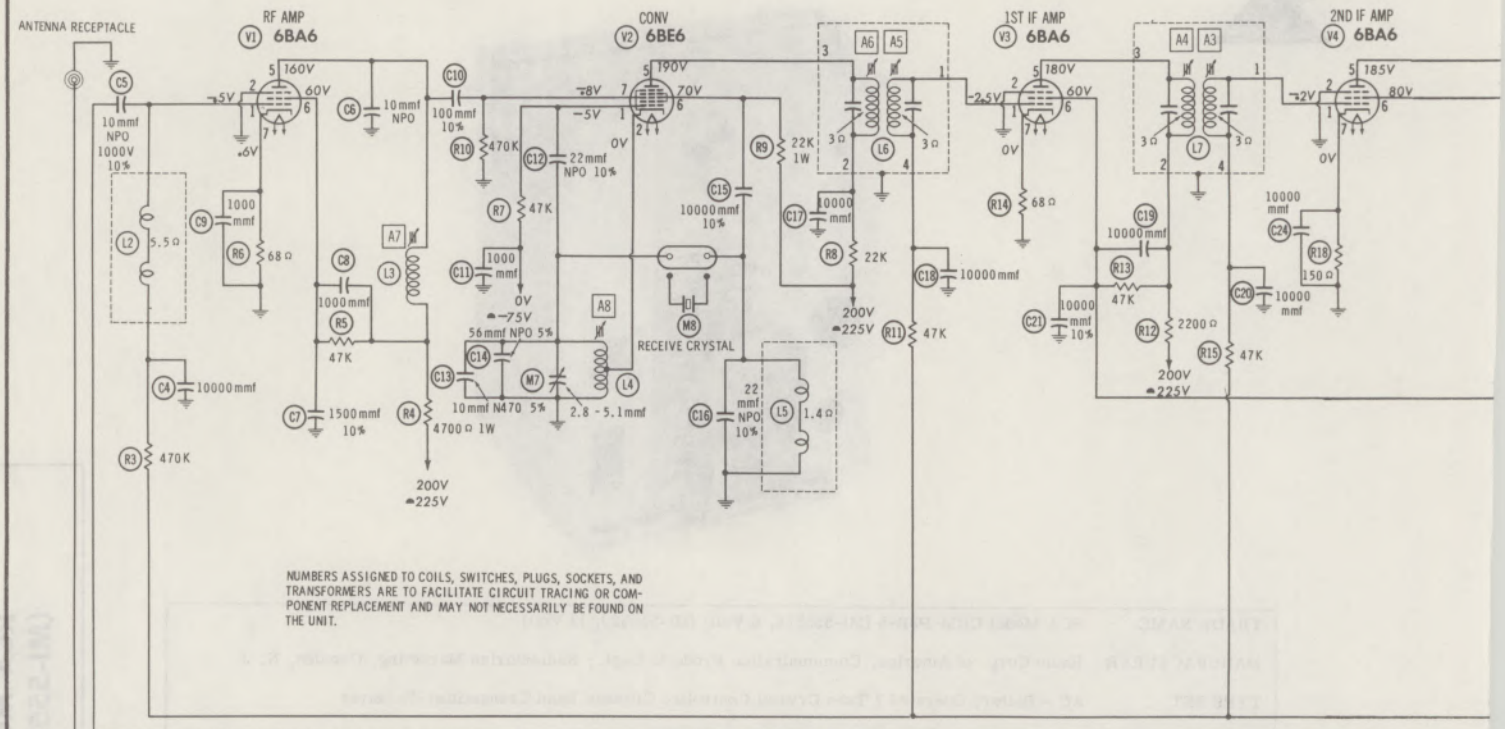

NUMBERS ASSIGNED TO COILS, SWITCHES, PLUGS, SOCKETS, AND TRANSFORMERS ARE TO FACILITATE CIRCUIT TRACING OR COMPONENT REPLACEMENT AND MAY NOT NECESSARILY BE FOUND ON THE UNIT.

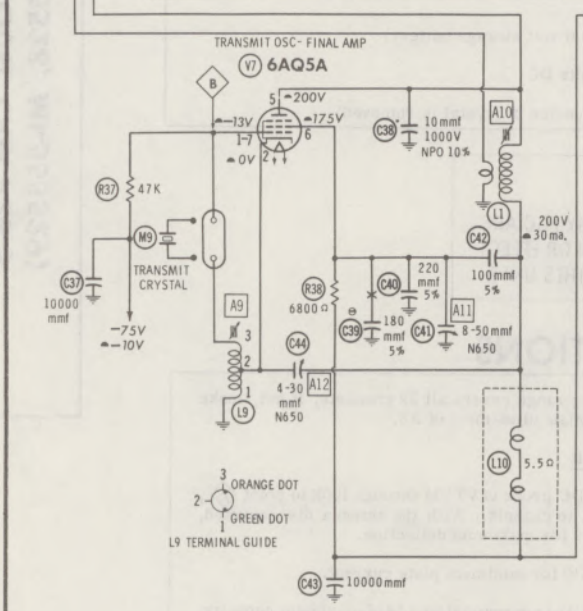

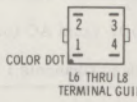

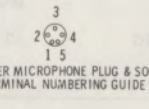

RESISTANCE READINGS

ITEM	TUBE	Pin 1	Pin 2	Pin 3	Pin 4	Pin 5	Pin 6	Pin 7	Pin 8	Pin 9
V1	6BA6	3meg	0Ω	0Ω	.1Ω	†5900Ω	†53K	68Ω		
V2	6BE6	47K	0Ω	0Ω	.1Ω	†23K	†23K	470K		
V3	6BA6	2.7meg	0Ω	0Ω	.1Ω	†3400Ω	†50K	68Ω		
V4	6BA6	2.7meg	0Ω	0Ω	.1Ω	†3400Ω	†50K	150Ω		
V5	6T8A	500K	240K	NC	.1Ω	.1Ω	1.3meg	0Ω	9.5meg	†470K
V6	6AQ5A	NC	330Ω	.1Ω	.1Ω	†400Ω	†1200Ω	470K		
V7	6AQ5A	▲70K	.1Ω	.1Ω	.1Ω	†1400Ω	†7800Ω	NC		

ALL MEASUREMENTS MADE IN "RECEIVE" POSITION UNLESS OTHERWISE DESIGNATED.
▲ MEASURED IN "TRANSMIT" POSITION.
† MEASURED FROM OUTPUT OF M2.

NC NO CONNECTION

1. DC voltage measurements taken with vacuum tube voltmeter; AC voltages measured with 1000 ohm per volt voltmeter.
2. Socket connections are shown as bottom views.
3. Measured values are from socket pin to common ground.
4. Line voltage maintained at 117 volts for voltage readings.
5. Nominal tolerance on component values makes possible a variation of ±15% in voltage and resistance readings.
6. Volume control at maximum, no signal applied for voltage measurements.

⊖ SEE PARTS LIST FOR ALTERNATE VALUE OR APPLICATION

DC COIL RESISTANCE VALUES UNDER ONE OHM NOT SHOWN ON SCHEMATIC DIAGRAM

ARROWS ON CONTROLS INDICATE CLOCKWISE ROTATION (CONTROL VIEWED FROM SHAFT END)

A PHOTOFACT STANDARD NOTATION SCHEMATIC

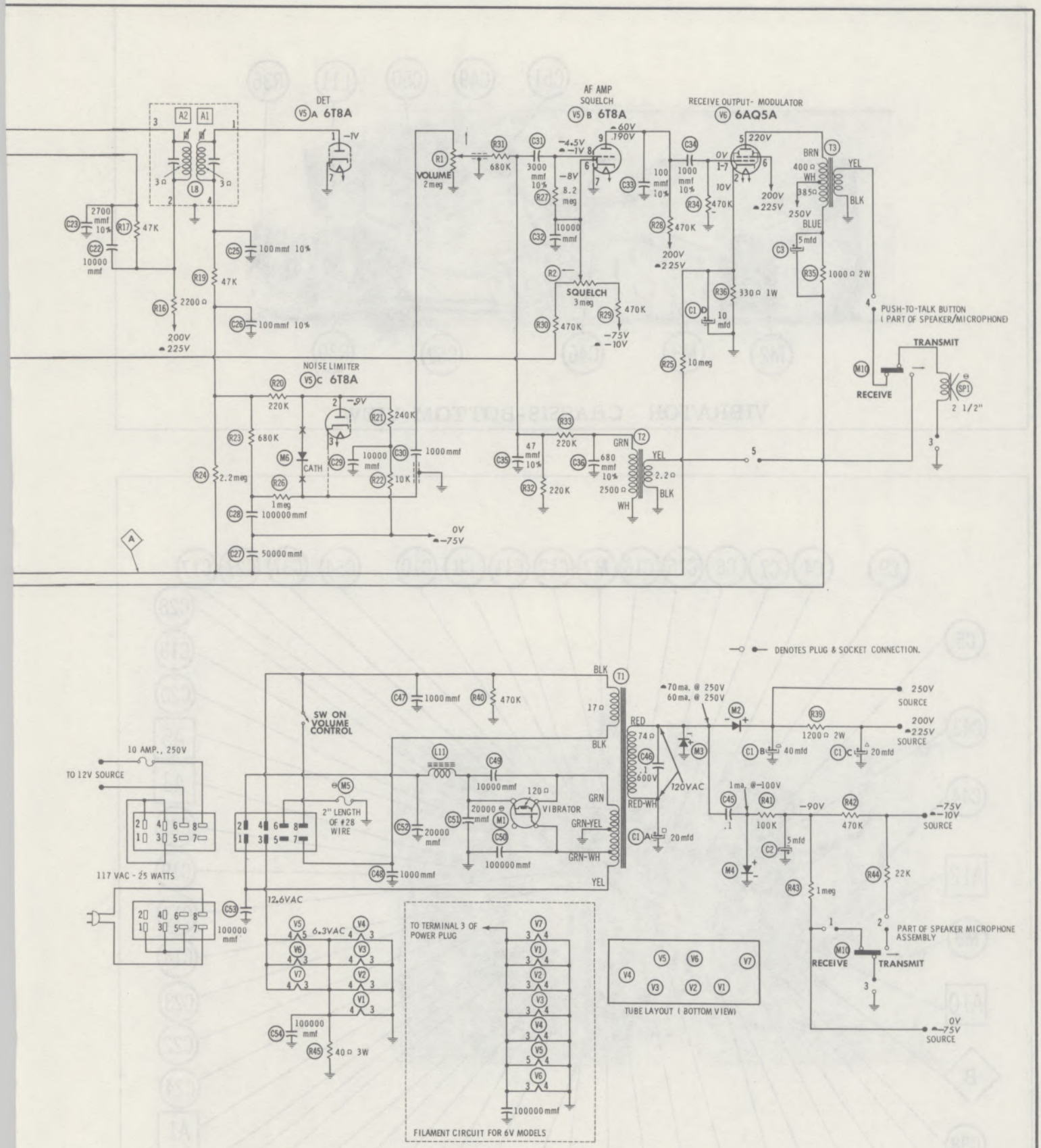

RCA MODEL CRM-P2B-5
(MI-555528, MI-555529)

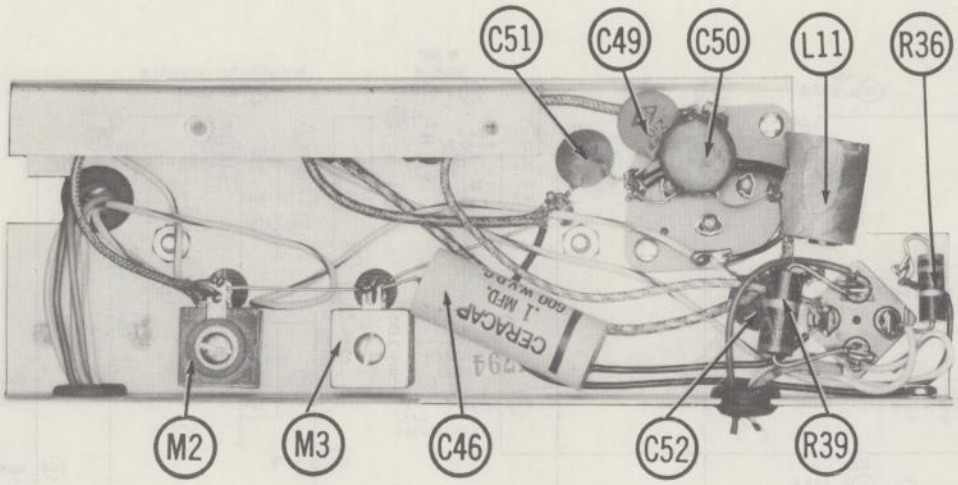

VIBRATOR CHASSIS-BOTTOM VIEW

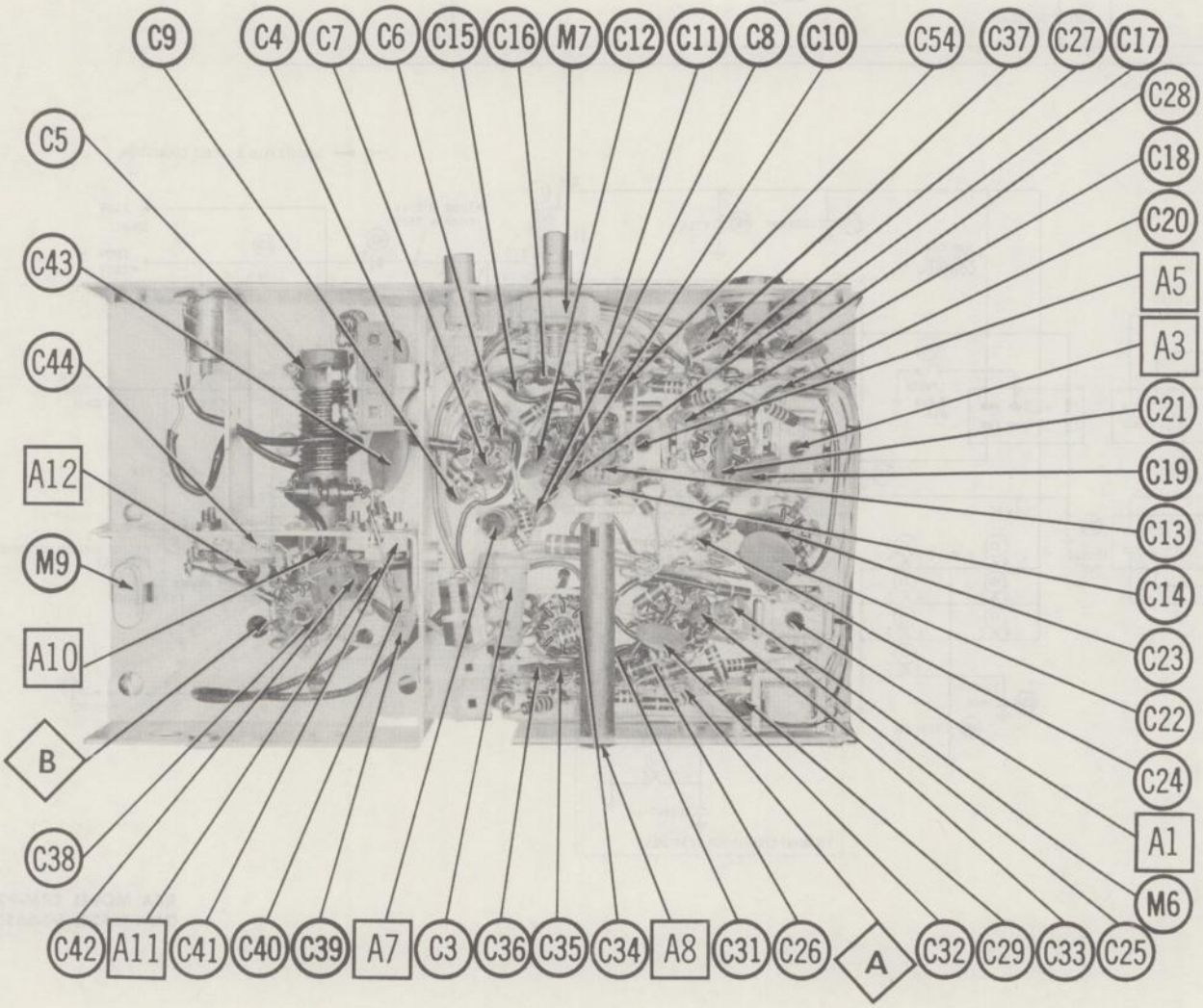

CHASSIS BOTTOM VIEW-ALIGN., CAP. & MISC. IDENT.

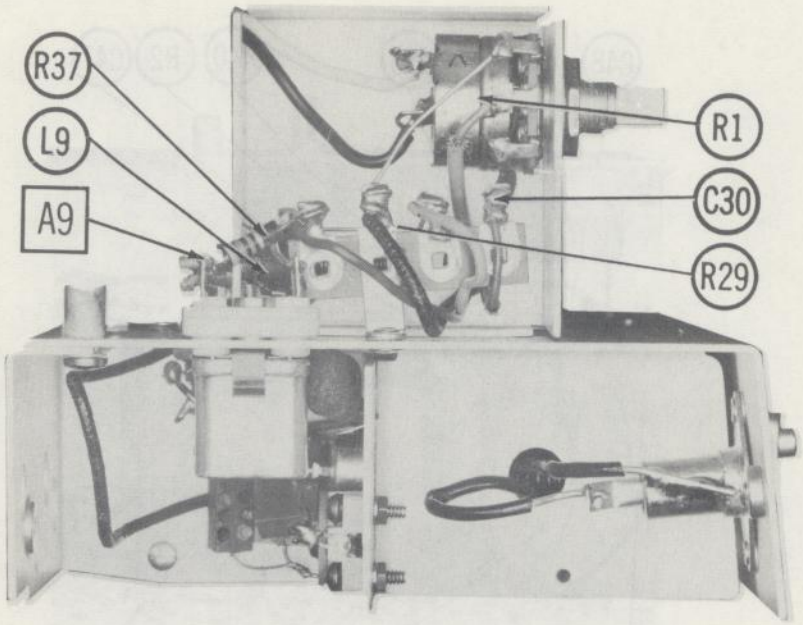

CHASSIS-END VIEW

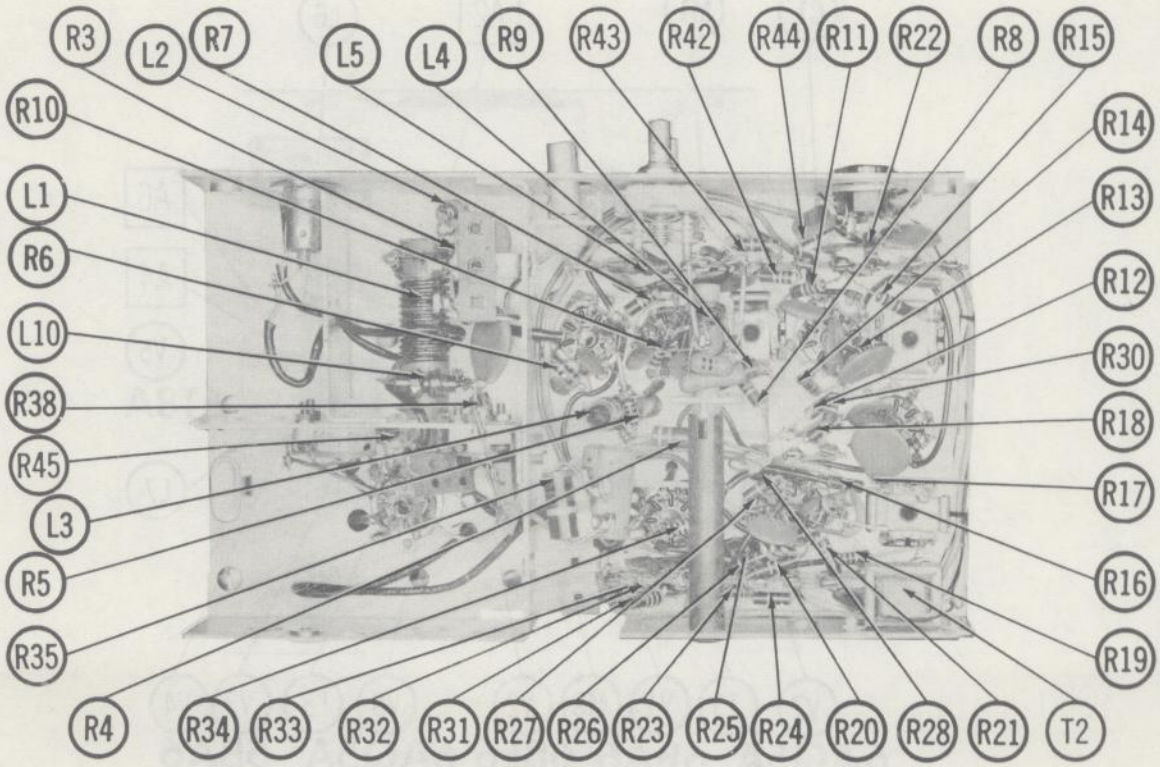

CHASSIS BOTTOM VIEW-RESISTOR & INDUCTOR IDENT.

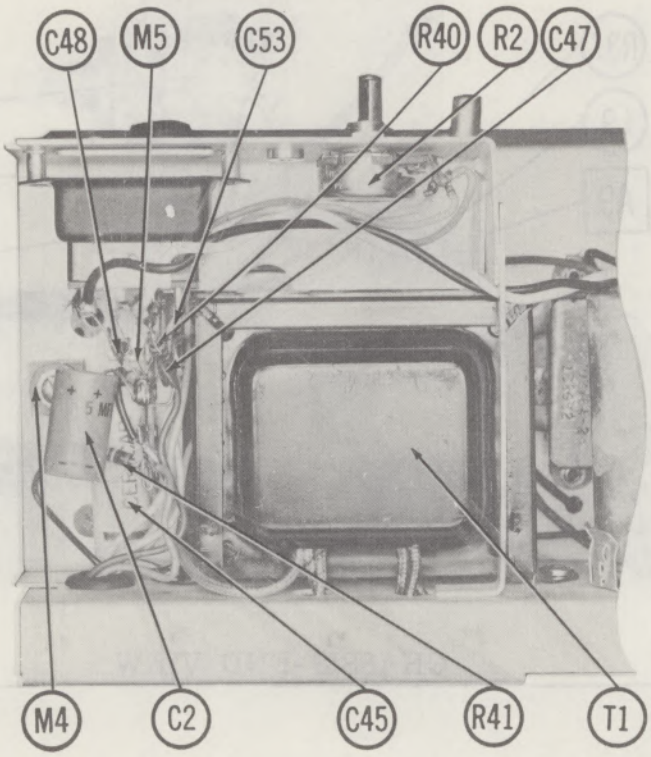

POWER CHASSIS-BOTTOM VIEW

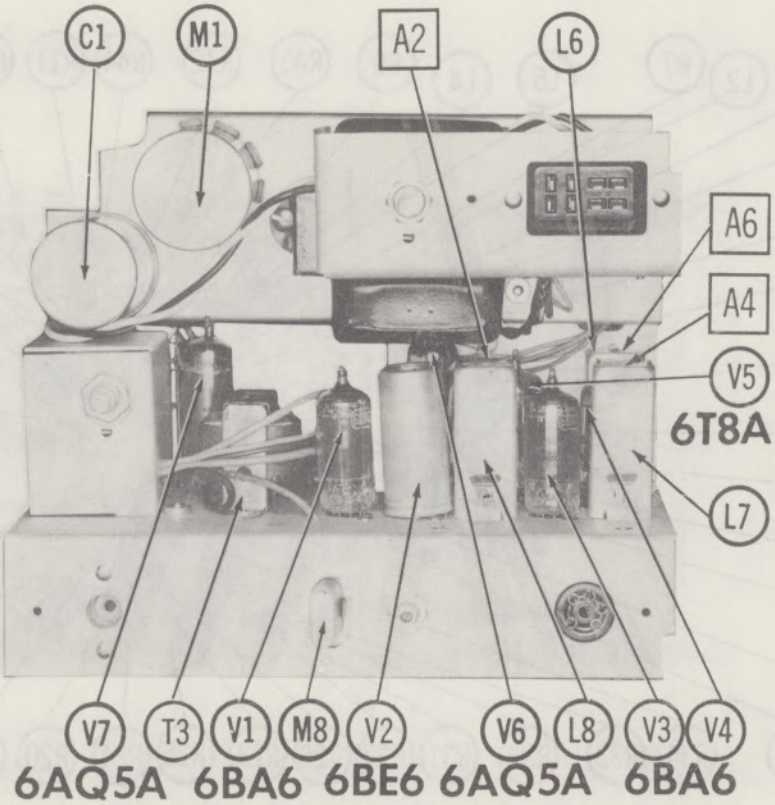

CHASSIS-TOP VIEW

PARTS LIST AND DESCRIPTIONS

TUBES

ITEM No.	USE	TYPE (GENERAL ELECTRIC)	ITEM No.	USE	TYPE (RAYTHEON / SYLVANIA)
V1	RF Amplifier	6BA6	V5	Det. -Squelch-AF Amp. - Noise Limiter	6T8A
V2	Converter	6BE6	V6	Rec. Output-Modulator	6AQ5A
V3	1st IF Amplifier	6BA6	V7	Trans. Osc. -Final Amp.	6AQ5A
V4	2nd IF Amplifier	6BA6			

ELECTROLYTIC CAPACITORS

ITEM No.	RATING CAP.	RATING VOLT.	RCA PART No.	AEROVOX PART No.	CORNELL-DUBILIER PART No.	MALLORY PART No.	PYRAMID PART No.	SPRAGUE PART No.	NOTES
C1A	■20	350		AFH4-04	D0032	FP420.35	TMQ-4295	TVL-4635	
B	▰40	350							
C	▲20	350							
D	10	350							
C2	5	150		SRE150V5	BBR4-150	TC40	TD-4-150	TVA-1403	
C3	5	150		SRE150V5	BBR4-150	TC40	TD-4-150	TVA-1403	

FIXED CAPACITORS

Capacity values given in the rating column are in mfd. for Paper Capacitors, and in mmfd. for Mica and Ceramic Capacitors.

ITEM No.	RATING	REMARKS	AEROVOX PART No.	CENTRALAB PART No.	CORNELL-DUBILIER PART No.	ELMENCO PART No.	MALLORY PART No.	SPRAGUE PART No.
C4	10000		BPD-01	DD-103	BYA10S1	CCD-103	B-110	5HK-S10
C5	10 1000V 10% NPO				C10Q1C	CCTO-100	CNO-410	10TCC-Q10
C6	10 NPO		NPO-DI 10	DTZ-10	C10Q1C	CCTO-100	CNO-410	10TCC-Q10
C7	1500 10%		DI-1500	DD-152	5R5D15	CCD-152	GP215	10TS-D15
C8	1000		BPD-001	DD-102	BYA10D1	CCD-102	B-210	5HK-D10
C9	1000		BPD-001	DD-102	BYA10D1	CCD-102	B-210	5HK-D10
C10	100 10%		DI-100	DD-101	L10T1	CCD-101	GP310	10TS-T10
C11	1000		BPD-001	DD-102	BYA10D1	CCD-102	B-210	5HK-D10
C12	22 NPO 10%		NPO-DI 22	DTZ-22	C10Q22C	CCTO-220	CNO-422	10TCC-Q22
C13	10 N470 5%					*		
C14	56 NPO 5%			TCZ-56	C10Q56C	CCTO-560	CNO-456	10TCC-Q56
C15	10000 10%		DI-10000		PM6S1	CCD-103		10TS-S10
C16	22 NPO 10%		NPO-DI 22	DTZ-22	C10Q22C	CCTO-220	CNO-422	10TCC-Q22
C17	10000		BPD-01	DD-103	BYA10S1	CCD-103	B-110	5HK-S10
C18	10000		BPD-01	DD-103	BYA10S1	CCD-103	B-110	5HK-S10
C19	10000		BPD-01	DD-103	BYA10S1	CCD-103	B-110	5HK-S10
C20	10000		BPD-01	DD-103	BYA10S1	CCD-103	B-110	5HK-S10
C21	10000 10%		DI-10000		PM6S1	CCD-103		10TS-S10
C22	10000		BPD-01	DD-103	BYA10S1	CCD-103	B-110	5HK-S10
C23	2700 10%		DI-2700		1R5D27	CCD-272		10TS-D27
C24	10000		BPD-01	DD-103	BYA10S1	CCD-103	B-110	5HK-S10
C25	100 10%		DI-100	DD-101	L10T1	CCD-101	GP310	10TS-T10
C26	100 10%		DI-100	DD-101	L10T1	CCD-101	GP310	10TS-T10
C27	50000		BPD-05	DD-503	H-05S5	1DP-2-503	GP150	5HK-S50
C28	100000			DDA-104	H-05P1	1DP-2-104	TA-010	TG-P10
C29	10000		BPD-01	DD-103	BYA10S1	CCD-103	B-110	5HK-S10
C30	1000		DI-1000	DD-102	BYA10D1	CCD-102	B-210	5HK-D10
C31	3000 10%		DI-3000		PM6D3	CCD-302	JL-233	10TS-D30
C32	10000		BPD-01	DD-103	BYA10S1	CCD-103	B-110	5HK-S10
C33	100 10%		DI-100	DD-101	L10T1	CCD-101	GP310	10TS-T10
C34	1000 10%		DI-1000	DD-102	1R5D1	CCD-102	GP210	10TS-D10
C35	47 10%		DI-47	DD-470	L10Q47	CCD-470	GP447	10TS-Q47
C36	680 10%		DI-680	DD-681	5R5T68	CCD-681	GP368	10TS-T68
C37	10000		BPD-01	DD-103	BYA10S1	CCD-103	B-110	5HK-S10
C38	10 1000V NPO 10%				C10Q1C	CCTO-100	CNO-410	10TCC-Q10
C39	180 5%	Note 1	1469-00018	TCZ-180	22R5T18	CM-19B-181J	CNO-318	MS-318
C40	220 5%		1469-00022	TCZ-220	22R5T22	CM-19B-221J	CNO-322	MS-322
C41	8-50 N650			822-AN				
C42	100 5%		1469-0001		22R5T1	CM-19B-101J	MCE235	MS-31
C43	10000		BPD-01	DD-103	BYA10S1	CCD-103	B-110	5HK-S10
C44	4-30 N650			822-EN				
C45	.1 400V		P488N-1	DD-104	CUB4P1	4DP-3-104	GEM-401	4TM-P10
C46	.1 600V		P688N-1	DD-104	CUB6P1	6DP-4-104	GEM-601	6TM-P10

FIXED CAPACITORS (cont)

ITEM No.	RATING	REMARKS	AEROVOX PART No.	CENTRALAB PART No.	CORNELL-DUBILIER PART No.	ELMENCO PART No.	MALLORY PART No.	SPRAGUE PART No.
C47	1000		BPD-001	DD-102	BYA10D1	CCD-102	B-210	5HK-D10
C48	1000		BPD-001	DD-102	BYA10D1	CCD-102	B-210	5HK-D10
C49	10000		BPD-01	DD-103	BYA10S1	CCD-103	B-110	5HK-S10
C50	100000			DDA-104	H-05P1	1DP-2-104	TA-010	TG-P10
C51	20000		BPD-02	DD-203	BYB6S2	CCD-203	B-120	5HK-S20
C52	20000		BPD-02	DD-203	BYB6S2	CCD-203	B-120	5HK-S20
C53	100000			DDA-104	H-05P1	1DP-2-104	TA-010	TG-P10
C54	100000			DDA-104	H-05P1	1DP-2-104	TA-010	TG-P10

Note 1. Not used in some versions.
* Not normally in distributor's stock. Available thru distributor on order to manufacturer.

CONTROLS

ITEM No.	RATING RESISTANCE	RATING WATTS	RCA PART No.	CENTRALAB PART No.	CLAROSTAT PART No.	CTS-IRC PART No.	MALLORY PART No.	INSTALLATION NOTES
R1A	2meg	½		B-76	A47-2meg-Z	Q13-139	U55	Volume
B	Shaft			Not Req.	FS-3	Not Req.	Not Req.	
C	Switch			KR-1	SWE-12	76-1	US-26	Power Off-On
R2A	3meg	½		B-84	A47-3meg-S	Q11-140	U59	Squelch
B	Shaft			Not Req.	FS-3	Not Req.	Not Req.	

RESISTORS

All wattages 1/2 watt, or less, unless otherwise listed.

ITEM No.	RATING	IRC PART No.	WORKMAN TV PART No.	REMARKS
R3	470K			
R4	4700Ω 1W			
R5	47K			
R6	68Ω			
R7	47K			
R8	22K			
R9	22K 1W			
R10	470K			
R11	47K			
R12	2200Ω			
R13	47K			
R14	68Ω			
R15	47K			
R16	2200Ω			
R17	47K			
R18	150Ω			
R19	47K			
R20	220K			
R21	240K			
R22	10K			
R23	680K			
R24	2.2meg			
R25	10meg			
R26	1meg			
R27	8.2meg			
R28	470K			
R29	470K			
R30	470K			
R31	680K			
R32	220K			
R33	220K			
R34	470K			
R35	1000Ω 2W			
R36	330Ω 1W			
R37	47K			
R38	6800Ω			
R39	1200Ω 2W			
R40	470K			
R41	100K			
R42	470K			
R43	1meg			
R44	22K			
R45	40Ω 3W	PW5-40	5W-SQ-40	

COILS (RF-IF)

ITEM No.	USE	RCA PART No.	Merit PART No.	Miller PART No.	Stancor PART No.	Workman TV PART No.	NOTES
L1	Ant.						
L2	RF Choke (100uh)		TV-194	6112	RTC-8574	T305	
L3	RF						
L4	Rec. Osc.						
L5	RF Choke (10uh)		BC-566	4612	RTC-8522	T860	
L6	1st IF						
L7	2nd IF						

PARTS LIST AND DESCRIPTIONS (Continued)

COILS (RF-IF) (cont)

ITEM No.	USE	REPLACEMENT DATA					NOTES
		RCA PART No.	Merit PART No.	Miller PART No.	Stancor PART No.	Workman TV PART No.	
L8	3rd IF						
L9	Trans. Osc.						
L10	RF Choke (100uh)		TV-194	6112	RTC-8574	T305	
L11	Hash Choke (27uh)		BC-537	5220	RTC-9182	T980	

TRANSFORMER (POWER)

ITEM No.	RATING			REPLACEMENT DATA					NOTES
	PRI.	SEC. 1	SEC. 2	RCA PART No.	Merit PART No.	Stancor PART No.	Thordarson PART No.	Triad PART No.	
T1	117V @ .5A (AC Only)	120V @ .200A AC	12.6VCT @ 1.2A (AC Operated)						
	12.6VCT @ 2A (DC Only)								

TRANSFORMER (MIC)

ITEM No.	TURNS RATIO		REPLACEMENT DATA					NOTES
	PRI.	SEC.	RCA PART No.	Merit PART No.	Stancor PART No.	Thordarson PART No.	Triad PART No.	
T2	1	37						

TRANSFORMER (AUDIO OUTPUT)

ITEM No.	IMPEDANCE		REPLACEMENT DATA					NOTES
	PRI.	SEC.	RCA PART No.	Merit PART No.	Stancor PART No.	Thordarson PART No.	Triad PART No.	
T3	15K Tap @ 7300Ω	3-4Ω						

SPEAKER

ITEM No.	TYPE			REPLACEMENT DATA		NOTES
	SIZE	FIELD	V. C. IMP.	RCA PART No.	QUAM PART No.	
SP1	2½"	PM	3-4Ω	8702750-1	25A07	Auxiliary Speakers: Bulkhead Mounting Re-entrant Part #MI-6317-D4 Adjustable Mounting Re-entrant 8½" Part #MI-14859-4 Adjustable Mounting Re-entrant 6 3/8" Part #MI-555504 Universal Mounting Mobile Part #MI-17462

VIBRATOR

ITEM No.	TYPE	INPUT VOLTS	FREQUENCY	REPLACEMENT DATA				NOTES
				RCA PART No.	CORNELL-DUBILIER PART No.	MALLORY PART No.	RADIART PART No.	
M1	Interrupter	12.6	115∿		6301	G-1601	6301	12V Versions
	Interrupter	6.3	115∿		5301	1601	5301	6 V Versions

POWER RECTIFIERS

ITEM No.	RATING	REPLACEMENT DATA				NOTES
	CURRENT (Measured)	RCA PART No.	RCA PART No.	SARKES TARZIAN PART No.	SYLVANIA PART No.	
M2	.060A		1N1763 *	65 †	SR200 *	* Silicon
M3	.060A		1N1763 *	65 †	SR200 *	† Selenium
M4	.001A			Model 10 †		

FUSES

ITEM No.	TYPE	RATING	REPLACEMENT DATA					
			RCA PART No.		LITTELFUSE PART No.		BUSS PART No.	
			FUSE	HOLDER	FUSE	HOLDER	FUSE	HOLDER
M5	2" Length of #28 Wire							
	3AG	10A * 250V			313010 (3AG 10A 250V)		AGC 10	
	3AG	5A † 250V			313005 (3AG 5A 250V		AGC 5	

* 6 V Versions. † 12 V Versions.

SIGNAL DIODES

ITEM No.	ORIG. TYPE	REPLACEMENT DATA				NOTES
		RCA PART No.	GENERAL ELECTRIC PART No.	RAYTHEON PART No.	SYLVANIA PART No.	
M6						ANL Detector

MISCELLANEOUS

ITEM No.	PART NAME	RCA PART No.	NOTES
M7	Variable Capacitor		Receiver Osc. Tuning (2.8—5.1mmf)
M8	Crystal		Receive (Order Desired Frequency)
M9	Crystal		Transmit (Order Desired Frequency)
M10	Switch		Push-to-talk (Part of Mike)

WIRING DATA

General-use Unshielded Hook-up Wire ..... Use BELDEN No. 8530 (Solid) Available in Ten Colors
8524 (Stranded) Available in Ten Colors

Power Cord ..... Use BELDEN No. 1765-B (6 Ft. Length)
1725-K (7½ Ft. Length)

PHOTOFACT® Folder

RCA MODEL CRM-P3A-5

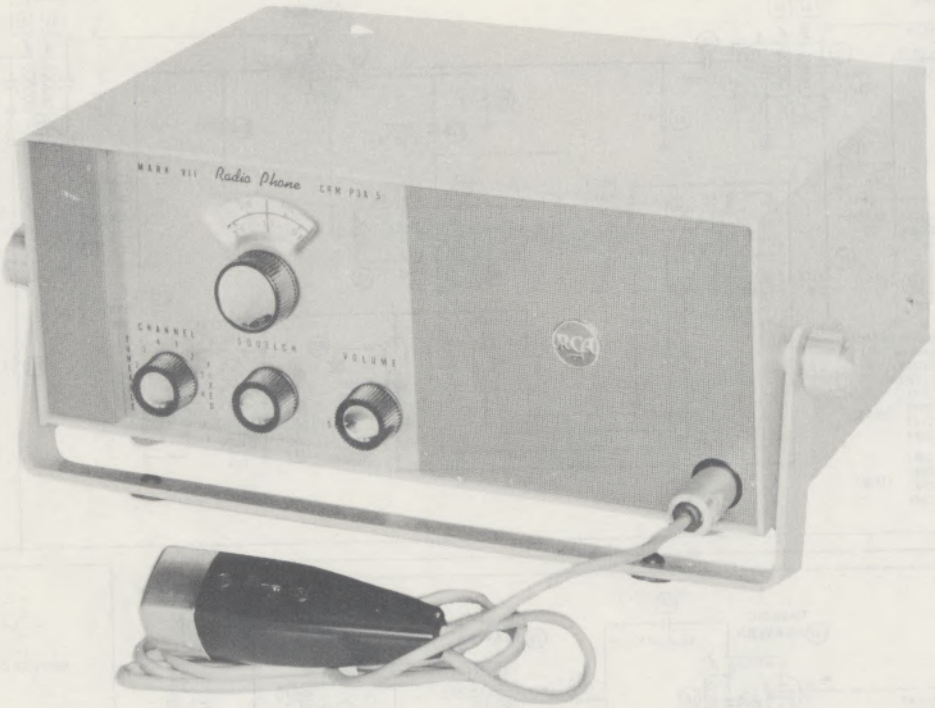

TRADE NAME	RCA Model Mark VII Radio Phone CRM-P3A—5 (AC-6Volt Models MI-555565-1, -2, -3, -4) (AC-12Volt Models MI-555566-1, -2, -3, -4)
MANUFACTURER	Radio Corp. of America, Communication Products Dept., Radiomarine Marketing, Camden, N. J.
TYPE SET	AC-Battery Operated 7 Tube Crystal Controlled Citizens Band Transmitter-Receive
POWER SUPPLY	110 – 120 Volts AC, 60 Cycles/ 6 Volt Storage Battery (or) 110-120 Volts AC, 60 Cycles/ 12Volt Storage Battery
RATING	7.4 Amp. @6.3 Volts DC (Receive), 9 Amp. @6.3 Volts DC (Transmit) Or 3.7 Amp. @12.6 Volts DC (Receive), 4.5 Amp. @12.6 Volts DC (Transmit) Or 52 Watts, .5 Amp. @117 Volts AC
FREQ. RANGE	Any 4 of Citizens Band Channels 1 thru 23 Receiver is continuously tuneable when channel switch is in one of the "Tuneable" Channel positions.

RCA MODEL CRM-P3A-5

NOTICE

ONLY THOSE PERSONS PROPERLY LICENSED BY FCC ARE PERMITTED TO MAKE CRYSTAL SUBSTITUTION OR EFFECT REPAIRS ON THE TRANSMITTER PORTION OF THIS UNIT.

HOWARD W. SAMS & CO., INC. Indianapolis 6, Indiana

KZ514

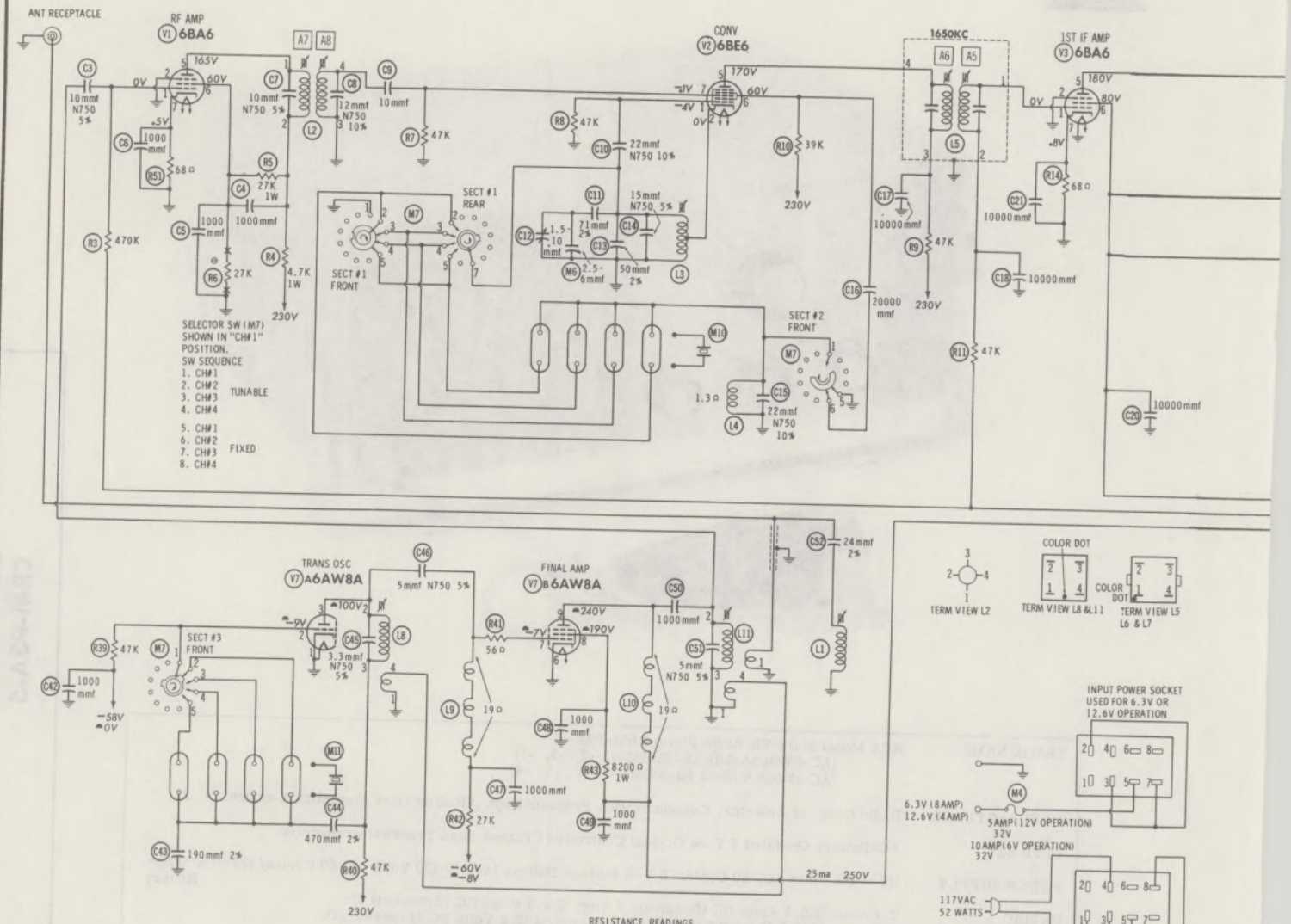

RESISTANCE READINGS

ITEM	TUBE	Pin 1	Pin 2	Pin 3	Pin 4	Pin 5	Pin 6	Pin 7	Pin 8	Pin 9
V1	6BA6	2.3meg	0Ω	.2Ω	.1Ω	†5800Ω	†25K	68Ω		
V2	6BE6	47K	.1Ω	.2Ω	.1Ω	†48K	†40K	47K		
V3	6BA6	2meg	0Ω	.8Ω	0Ω	†3300Ω	†30K	68Ω		
V4	6EA8	†135K	1meg	†50K	.8Ω	.2Ω	†3300Ω	150Ω	0Ω	2.2meg
V5	6T8A	490K	220K	1.9meg	0Ω	.3Ω	†1.9meg	0Ω	10meg	†470K
V6	6AQ5A	NC	330Ω	.2Ω	.3Ω	†450Ω	†1100Ω	470K		
V7	6AW8A	0Ω	▲47K	†48K	0Ω	.1Ω	0Ω	▲††83K	†9300Ω	†470Ω

ALL MEASUREMENTS MADE IN "RECEIVE" POSITION WITH MIKE UNPLUGGED UNLESS OTHERWISE DESIGNATED.
▲ MEASURED IN "TRANSMIT" POSITION.
† MEASURED FROM OUTPUT OF M1.
NC NO CONNECTION
†† MEASURED FROM OUTPUT OF M3.

A PHOTOFACT STANDARD NOTATION SCHEMATIC

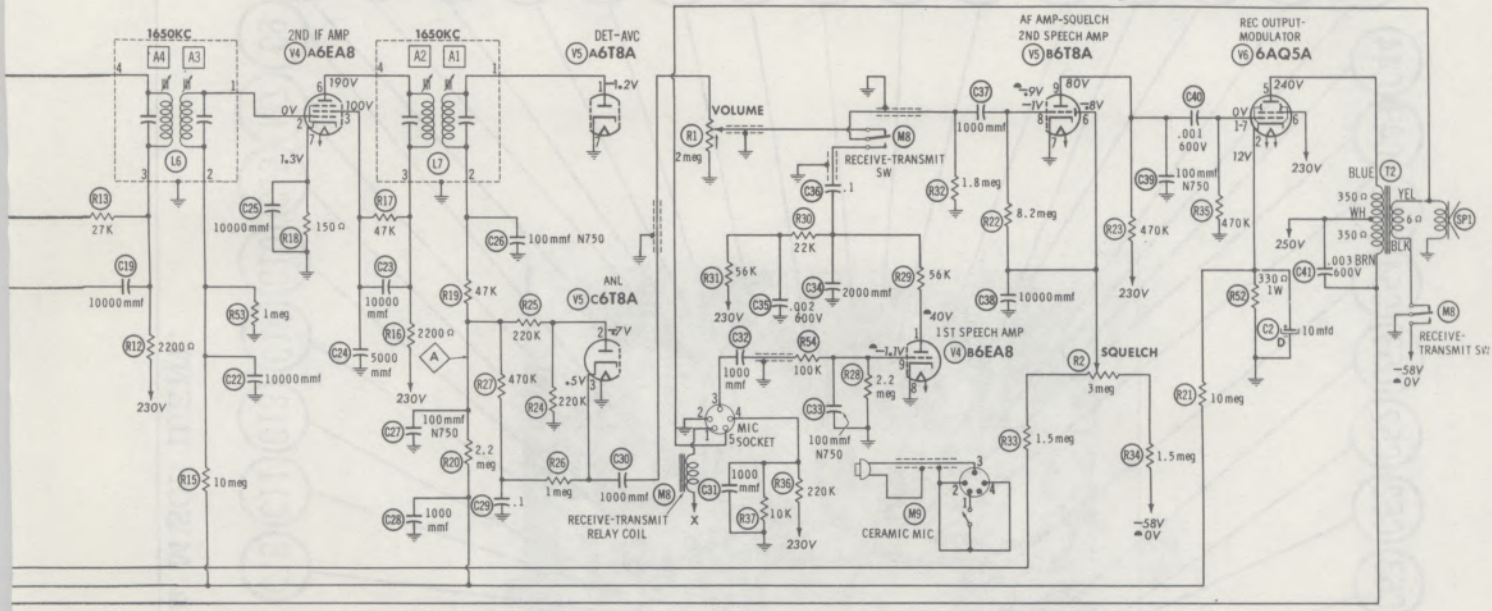

⊖ SEE PARTS LIST FOR ALTERNATE VALUE OR APPLICATION

DC COIL RESISTANCE VALUES UNDER ONE OHM NOT SHOWN ON SCHEMATIC DIAGRAM

ARROWS ON CONTROLS INDICATE CLOCKWISE ROTATION (CONTROL VIEWED FROM SHAFT END)

NUMBERS ASSIGNED TO COILS, SWITCHES, PLUGS, SOCKETS, AND TRANSFORMERS ARE TO FACILITATE CIRCUIT TRACING OR COMPONENT REPLACEMENT AND MAY NOT NECESSARILY BE FOUND ON THE UNIT.

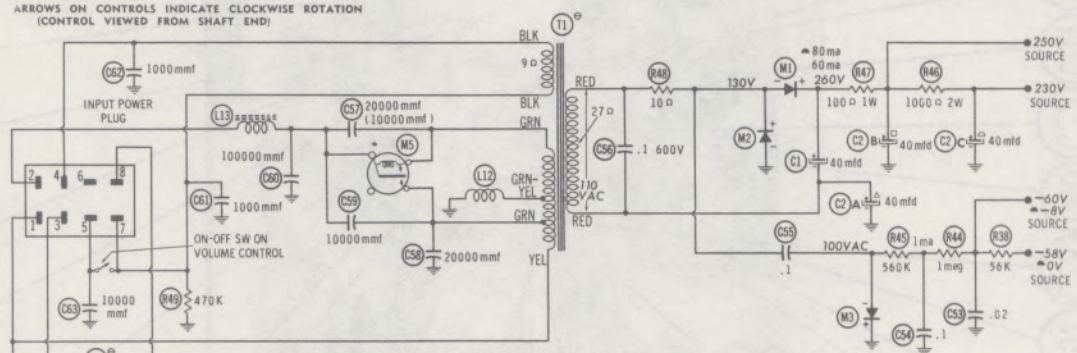

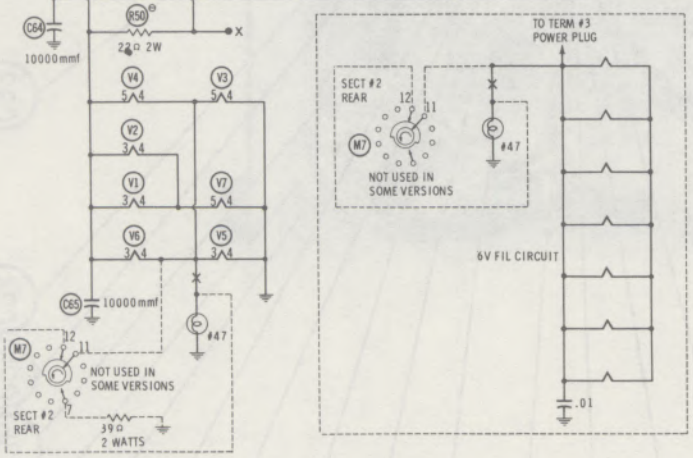

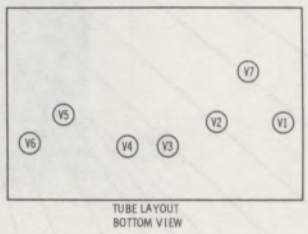

1. DC voltage measurements taken with vacuum tube voltmeter; AC voltages measured with 1000 ohm per volt voltmeter.
2. Socket connections are shown as bottom views.
3. Measured values are from socket pin to common ground.
4. Line voltage maintained at 117 volts for voltage readings.
5. Nominal tolerance on component values makes possible a variation of ±15% in voltage and resistance readings.
6. Volume control at maximum, no signal applied for voltage measurements.

RCA MODEL CRM-P3A-5

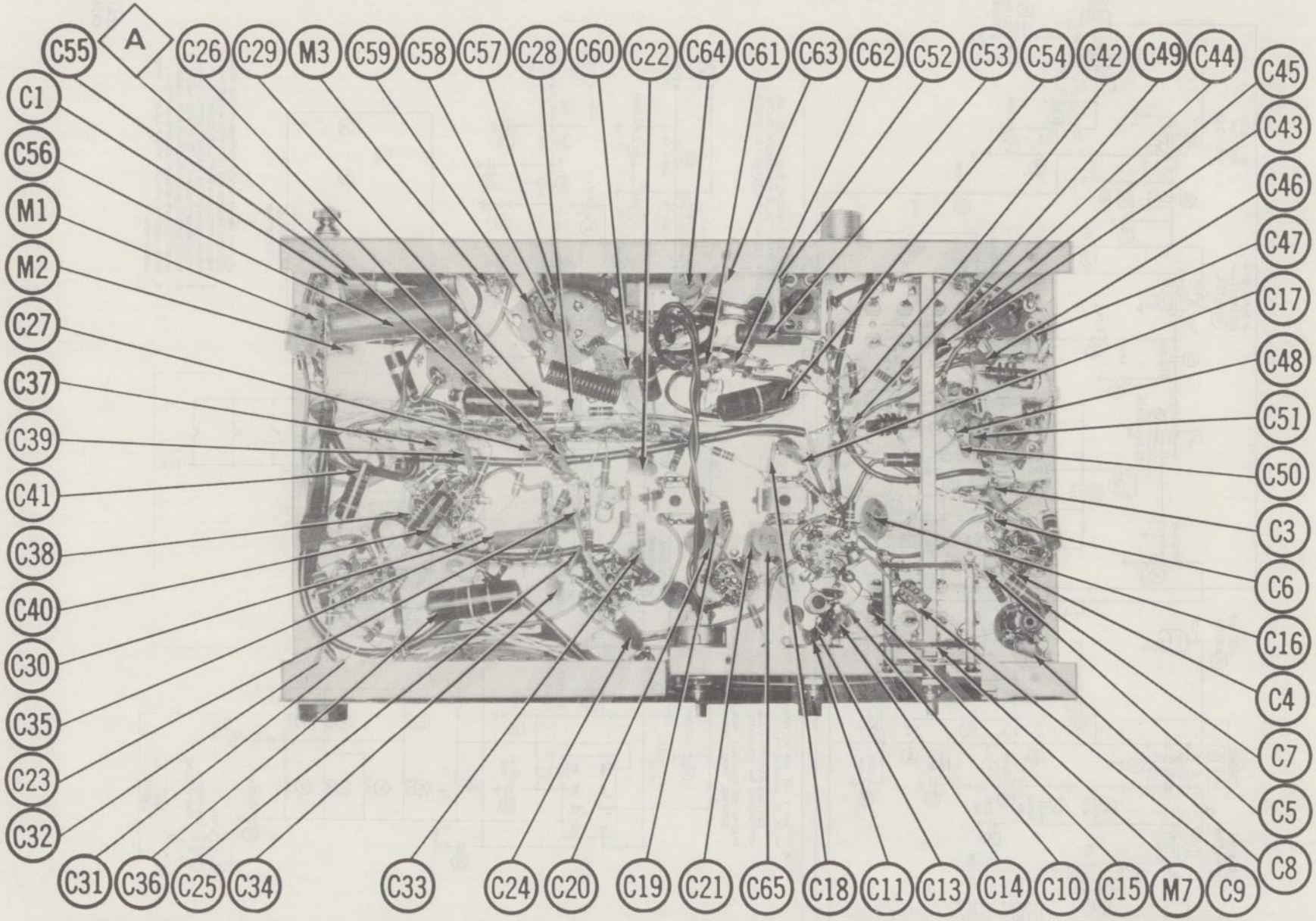

CHASSIS BOTTOM VIEW-CAPACITOR & MISC. IDENT.

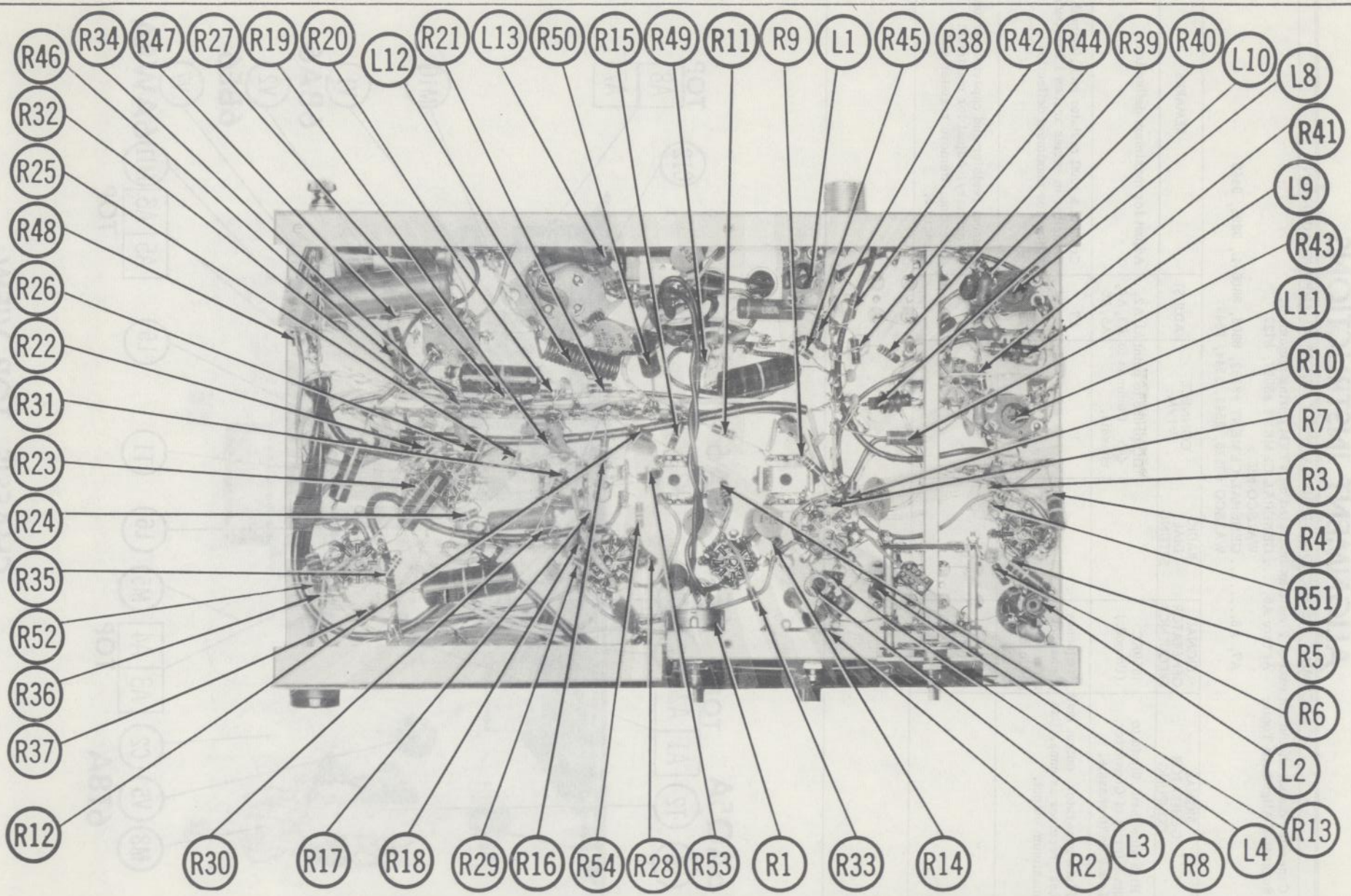

CHASSIS BOTTOM VIEW-RESISTOR & INDUCTOR IDENT.

ALIGNMENT INSTRUCTIONS

ALIGNMENT INSTRUCTIONS—READ CAREFULLY BEFORE ATTEMPTING ALIGNMENT

Generator output should not exceed 2 volts as indicated on VTVM during alignment.
Suggested Alignment Tools: A1 thru A6..... GENERAL CEMENT #5097, 8727
WALSCO #2515
A7, A8..... GENERAL CEMENT #8282, 8606, 8606-L, 9295, 9440
WALSCO #2526, 2543, 2544, 2545

	SIGNAL GENERATOR COUPLING	SIGNAL GENERATOR FREQUENCY	RADIO DIAL SETTING	CONNECT VTVM	ADJUST	REMARKS
1.	High side thru .01mfd to pin 7 (grid) of Converter. Low side to chassis.	1650KC (Unmod.)		DC probe to point Ⓐ. Common to chassis.	A1, A2, A3, A4, A5, A6	Adjust for maximum deflection.
2.	Place generator output lead near receiver antenna. Use maximum output.	Frequency of channel receiver is set to operate on.		"	A7	Connect a 100Ω resistor and .005mfd capacitor in series across L2 Secondary. Adjust for maximum deflection
3.	"	"		"	A8	Connect resistor and capacitor across L2 primary. Adjust for maximum deflection. Remove resistor and capacitor.

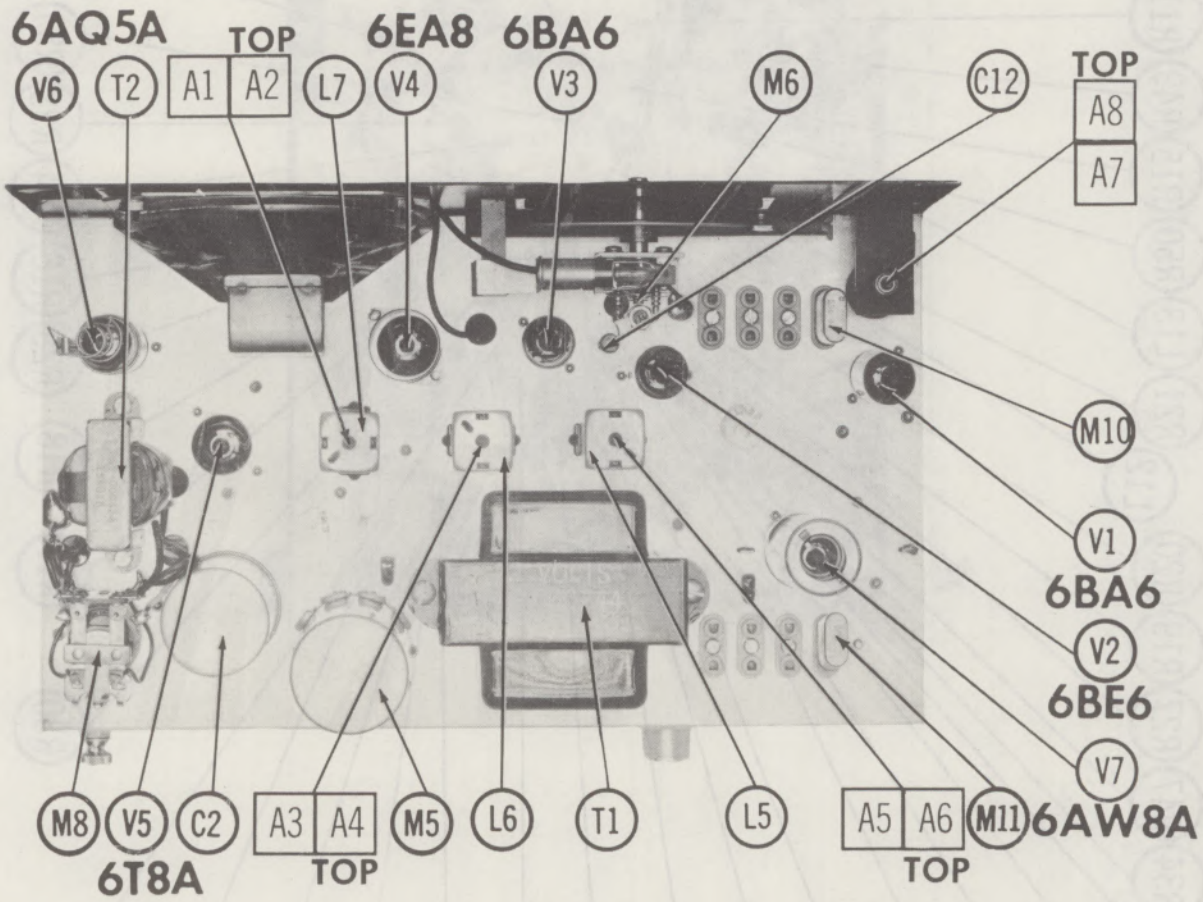

CHASSIS—TOP VIEW

PARTS LIST AND DESCRIPTIONS

TUBES

ITEM No.	USE	TYPE	ITEM No.	USE	TYPE
	• GENERAL ELECTRIC •			RAYTHEON • SYLVANIA •	
V1	RF Amplifier	6BA6	V5	Det. -ANL-AVC-AF Amp. - 2nd Speech Amp.	6T8A
V2	Converter	6BE6	V6	Rcvr. Output-Modulator	6AQ5A
V3	1st IF Amplifier	6BA6	V7	Trans. Osc. -Final Amp.	6AW8A
V4	2nd IF Amplifier-1st Speech Amp.	6EA8			

ELECTROLYTIC CAPACITORS

ITEM No.	RATING CAP.	RATING VOLT.	RCA PART No.	AEROVOX PART No.	CORNELL-DUBILIER PART No.	MALLORY PART No.	PYRAMID PART No.	SPRAGUE PART No.	NOTES
C1	40	200	219977	PRS1580	BR4025	TC58	TD-40-250	TVA-1511	
C2A	▲40	200	219976					TVLS-3639.14*	
B	■40	350						TVA-1304	
C	▬40	350							
D	10	50							

* Not normally in distributor's stock. Available thru distributor on order to manufacturer.

FIXED CAPACITORS

Capacity values given in the rating column are in mfd. for Paper Capacitors, and in mmfd. for Mica and Ceramic Capacitors.

ITEM No.	RATING	REMARKS	AEROVOX PART No.	CENTRALAB PART No.	CORNELL-DUBILIER PART No.	ELMENCO PART No.	MALLORY PART No.	SPRAGUE PART No.
C3	10 N750 5%		N750-SI 10	TCN-10	C10Q10U	CCTN-100	CN7-410	10TCU-Q10
C4	1000		BPD-001	DD-102	BYA10D1	CCD-102	B-210	5HK-D10
C5	1000		BPD-001	DD-102	BYA10D1	CCD-102	B-210	5HK-D10
C6	1000		BPD-001	DD-102	BYA10D1	CCD-102	B-210	5HK-D10
C7	10 N750 5%		N750-SI 10	TCN-10	C10Q1U	CCTN-100	CN7-410	10TCU-Q10
C8	12 N750 5%			TCN-12	C10Q12U	CCTN-120	CN7-412	10TCU-Q12
C9	10		1468-00001	TCZ-10	5W5Q1	CM-19B-100M	MC215	1FM-41
C10	22 N750 10%		N750-SI 22	TCN-22	C10Q22U	CCTN-220	CN7-422	10TCU-Q22
C11	71 2%	#219999						
C12	1.5-10	#219975		829-10				
C13	50 2%			TCZ-50		CM-15E-500G	MCE225	
C14	15 N750 5%		N750-SI 15	TCN-15	C10Q15U		CN7-415	10TCU-Q15
C15	22 N750 10%		N750-SI 22	TCN-22	C10Q22U	CCTN-220	CN7-422	10TCU-Q22
C16	20000		BPD-02	DD-203	BYB6S2	CCD-203	B-120	5HK-S20
C17	10000		BPD-01	DD-103	BYA10S1	CCD-103	B-110	5HK-S10
C18	10000		BPD-01	DD-103	BYA10S1	CCD-103	B-110	5HK-S10
C19	10000		BPD-01	DD-103	BYA10S1	CCD-103	B-110	5HK-S10
C20	10000		BPD-01	DD-103	BYA10S1	CCD-103	B-110	5HK-S10
C21	10000		BPD-01	DD-103	BYA10S1	CCD-103	B-110	5HK-S10
C22	10000		BPD-01	DD-103	BYA10S1	CCD-103	B-110	5HK-S10
C23	10000		BPD-01	DD-103	BYA10S1	CCD-103	B-110	5HK-S10
C24	5000		BPD-005	DD-502	BYA10D5	CCD-502	B-250	5HK-D50
C25	10000		BPD-01	DD-103	BYA10S1	CCD-103	B-110	5HK-S10
C26	100 N750		N750-SI 100	TCN-100	C10T1U	CCTN-101	CN7-310	10TCU-T10
C27	100 N750		N750-SI 100	TCN-100	C10T1U	CCTN-101	CN7-310	10TCU-T10
C28	1000		BPD-001	DD-102	BYA10D1	CCD-102	B-210	5HK-D10
C29	.1 200V		P288N-1	DF-104	CUB2P1	2DP-3-104	GEM-201	2TM-P10
C30	1000		BPD-001	DD-102	BYA10D1	CCD-102	B-210	5HK-D10
C31	1000		BPD-001	DD-102	BYA10D1	CCD-102	B-210	5HK-D10
C32	1000		BPD-001	DD-102	BYA10D1	CCD-102	B-210	5HK-D10
C33	100 N750		N750-SI 100	TCN-100	C10T1U	CCTN-101	CN7-310	10TCU-T10
C34	2000		BPD-002	DD-203	BYA10D2	CCD-202	B-220	5HK-D20
C35	.002 600V		P688N-002	D6-202	CUB6D2	6DP-1-202	GEM-621	6TM-D20
C36	.1 400V		P488N-1	DF-104	CUB4P1	4DP-3-104	GEM-401	4TM-P10
C37	1000		BPD-001	DD-102	BYA10D1	CCD-102	B-210	5HK-D10
C38	10000		BPD-01	DD-103	BYA10S1	CCD-103	B-110	5HK-S10
C39	100 N750		N750-SI 100	TCN-100	C10T1U	CCTN-101	CN7-310	10TCU-T10
C40	.001 600V		P688N-001	D6-102	CUB6D1	6DP-1-102	GEM-621	6TM-D10
C41	.003 600V		P688N-003	D6-302	CUB6D3	6DP-1-302	GEM-623	6TM-D30
C42	1000		BPD-001	DD-102	BYA10D1	CCD-102	B-210	5HK-D10
C43	190 2%	#219998						

FIXED CAPACITORS (cont)

ITEM No.	RATING	REMARKS	AEROVOX PART No.	CENTRALAB PART No.	CORNELL-DUBILIER PART No.	ELMENCO PART No.	MALLORY PART No.	SPRAGUE PART No.
C44	470 2%					CM-15E-471G	MCE244	
C45	3.3 N750 5%		N750-SI 3.3	TCN-3R3			CN7-533	10TCU-V33
C46	5 N750 5%		N750-SI 5.0	TCN-5	C10V5U	CCTN-050	CN7-550	10TCU-V50
C47	1000		BPD-001	DD-102	BYA10D1	CCD-102	B-210	5HK-D10
C48	1000		BPD-001	DD-102	BYA10D1	CCD-102	B-210	5HK-D10
C49	1000		BPD-001	DD-102	BYA10D1	CCD-102	B-210	5HK-D10
C50	1000		BPD-001	DD-102	BYA10D1	CCD-102	B-210	5HK-D10
C51	5 N750 5%		N750-SI 5.0	TCN-5	C10V5U	CCTN-050	CN7-550	10TCU-V50
C52	24 2%			TCZ-24			MCE220	
C53	.02 200V		P288N-02	DD-203	CUB4S2	4DP-2-203	GEM-2022	2TM-S20
C54	.1 200V		P288N-1	DF-104	CUB2P1	2DP-3-104	GEM-201	2TM-P10
C55	.1 400V		P488N-1	DF-104	CUB4P1	4DP-3-104	GEM-401	4TM-P10
C56	.1 600V		P488N-1	DF-104	CUB6P1	6DP-4-104	GEM-601	6TM-P10
C57	20000	(10000) †	BPD-02	DD-203	BYB6S2	CCD-203	B-120	5HK-S20
C58	20000		BPD-02	DD-203	BYB6S2	CCD-203	B-120	5HK-S20
C59	10000		BPD-01	DD-103	BYA10S1	CCD-103	B-110	5HK-S10
C60	100000				CUB2P1	1DP-2-104	BT-010	TH-P10
C61	1000		BPD-001	DD-102	BYA10D1	CCD-102	B-210	5HK-D10
C62	1000		BPD-001	DD-102	BYA10D1	CCD-102	B-210	5HK-D10
C63	10000		BPD-01	DD-103	BYA10S1	CCD-103	B-110	5HK-S10
C64	10000		BPD-01	DD-103	BYA10S1	CCD-103	B-110	5HK-S10
C65	10000		BPD-01	DD-103	BYA10S1	CCD-103	B-110	5HK-S10

\# RCA Part Number.
† Alternate Value.

CONTROLS

ITEM No.	RATING RESISTANCE	RATING WATTS	RCA PART No.	CENTRALAB PART No.	CLAROSTAT PART No.	CTS-IRC PART No.	MALLORY PART No.	INSTALLATION NOTES
R1A	2meg	½	219971	B-76	A47-2meg-Z	Q13-139	U55	Volume
B	Shaft			Not Req.	FS-3	Not Req.	Not Req.	
C	Switch			KR-1	SWE-12	76-1	US-26	Power Off-On
R2A	3meg	½	219972	B-84	A47-3meg-S	Q11-140	U59	Squelch
B	Shaft			Not Req.	FS-3	Not Req.	Not Req.	

RESISTORS

All wattages 1/2 watt, or less, unless otherwise listed.

ITEM No.	RATING	IRC PART No.	WORKMAN TV PART No.	REMARKS	ITEM No.	RATING	IRC PART No.	WORKMAN TV PART No.	REMARKS
R3	470K				R28	2.2meg			
R4	4700Ω 1W				R29	56K			
R5	27K 1W				R30	22K			
R6	27K			Note 2	R31	56K			
R7	47K				R32	1.8meg			
R8	47K				R33	1.5meg			
R9	47K				R34	1.5meg			
R10	39K				R35	470K			
R11	47K				R36	220K			
R12	2200Ω				R37	10K			
R13	27K				R38	56K			
R14	68Ω				R39	47K			
R15	10meg				R40	47K			
R16	2200Ω				R41	56Ω			
R17	47K				R42	27K			
R18	150Ω				R43	8200Ω 1W			
R19	47K				R44	1meg			
R20	2.2meg				R45	560K			
R21	10meg				R46	1000Ω 2W			
R22	8.2meg				R47	100Ω 1W			
R23	470K				R48	10Ω			
R24	220K				R49	470K			
R25	220K				R50	22Ω 2W			Note 1
R26	1meg				R51	68Ω			
R27	470K				R52	330Ω 1W			

PARTS LIST AND DESCRIPTIONS (Continued)

RESISTORS (cont)

ITEM No.	RATING	REPLACEMENT DATA		
		IRC PART No.	WORKMAN TV PART No.	REMARKS
R53	1meg			
R54	100K			

Note 1. 6 volt versions use 5Ω in this application.
Note 2. Not used in some versions.

COILS (RF-IF)

ITEM No.	USE	REPLACEMENT DATA					NOTES
		RCA PART No.	Merit PART No.	Miller PART No.	Stancor PART No.	Workman TV PART No.	
L1	Ant. Loading	219989					
L2	RF	220251					
L3	Osc.	219985					
L4	RF Choke (7.2uh)	219983	BC-565	4611	RTC-8521	T859	
L5	1st IF	219978					
L6	2nd IF	219978					
L7	3rd IF	219978					
L8	Osc. Plate	219981					
L9	RF Choke (500uh)	219988	TV-204	6174	RTC-8592	T324	
L10	RF Choke (500uh)	219988	TV-204	6174	RTC-8592	T324	
L11	Final Plate	219980					
L12	Hash Choke (10uh)	219984					
L13	Hash Choke (30uh)	219982					

TRANSFORMER (POWER)

ITEM No.	RATING			REPLACEMENT DATA					NOTES
	PRI.	SEC. 1	SEC. 2	RCA PART No.	Merit PART No.	Stancor PART No.	Thordarson PART No.	Triad PART No.	
T1	117V ⓐ .5A or 12.6VCT ⓐ 2.5A	110V ⓐ .290A	12.6V ⓐ 1.5A (AC Only)	219987 ①					① Part #219986 used in 6 volt versions.

TRANSFORMER (AUDIO OUTPUT)

ITEM No.	IMPEDANCE		REPLACEMENT DATA					NOTES
	PRI.	SEC.	RCA PART No.	Merit PART No.	Stancor PART No.	Thordarson PART No.	Triad PART No.	
T2	10K CT	3-4Ω	219990	A-2938	A-3850	24S05	S-51X	

SPEAKER

ITEM No.	TYPE			REPLACEMENT DATA		NOTES
	SIZE	FIELD	V. C. IMP.	RCA PART No.	QUAM PART No.	
SP1	4"	PM	3-4Ω	79696-B	4A05	

POWER RECTIFIERS

ITEM No.	RATING	REPLACEMENT DATA				NOTES
	CURRENT (Measured)	RCA PART No.	RCA PART No.	SARKES TARZIAN PART No.	SYLVANIA PART No.	
M1	.080A	219973 *	1N1763 *	2F4 *	SR200 *	* Silicon Diode
M2	.080A	219973 *	1N1763 *	2F4 *	SR200 *	♦ Selenium Diode
M3	.001A	218022 ♦		Model 10 ♦		

FUSES

ITEM No.	TYPE	RATING	REPLACEMENT DATA					
			RCA PART No.		LITTELFUSE PART No.		BUSS PART No.	
			FUSE	HOLDER	FUSE	HOLDER	FUSE	HOLDER
M4	3AG	5A 32V			312005 (3AG 5A 32V)		AGC 5	
	3AG	10A 32V			312010 (3AG 10A 32V)		AGC 10	

VIBRATOR

ITEM No.	TYPE	INPUT VOLTS	FRE-QUENCY	REPLACEMENT DATA				NOTES
				RCA PART No.	CORNELL-DUBILIER PART No.	MALLORY PART No.	RADIART PART No.	
M5	Interrupter	12.6	115~	220001 ♦				♦ 12 Volt versions
	Interrupter	6.3	115~	220000 *				* 6 Volt Versions.

MISCELLANEOUS

ITEM No.	PART NAME	RCA PART No.	NOTES
M6	Varible Cap	219974	2.5 - 6mmf
M7	Switch	219991	Selector (Includes Wafer #219992) Rotary Type
M8	Relay	219970	Switching, 12 Volt
		219969	Switching, 6 Volt
M9	Microphone	219994	Includes 48" Cable & Connector
M10	Crystal	MI-555583- *	Receive (Crystal is marked 019-002362- *) Replace * with Channel Number
M11	Crystal	MI-555582- *	Transmit (Crystal is marked 019-002361- *) Replace * with Channel Number.

CABINETS & CABINET PARTS

(When Ordering Cabinets & Cabinet Parts, Specify Model, Chassis & Color)

NAME	PART NO.	DESCRIPTION
Indicator	219995	Dial
Scale	219996	Tuning
Knob	219966	Tuning
Knob	219968	Volume, Channel, Squelch
Knob	219967	Handle Retaining

WIRING DATA

General-use Unshielded Hook-up Wire ..... Use BELDEN No. 8530 (Solid) Available in Ten Colors
8524 (Stranded) Available in Ten Colors
Power Cord ..... Use BELDEN No. 1765-B (6 Ft. Length)
1725-K (7½ Ft. Length)

PHOTOFACT® Folder

REALISTIC MODEL TRC-27 (94L595)

REALISTIC MODEL TRC-27 (94L595)

TRADE NAME	Realistic Model TRC-27 (94L595)
SUPPLIER	Radio Shack Corp., 730 Commonwealth Ave., Boston 17, Mass.
TYPE SET	AC-Battery Operated 10 Tube— 2 Transistor Single Channel Crystal Controlled Citizens Band Transmitter-Receiver
POWER SUPPLY	105 — 125 Volts AC, 60 Cycles (or) 12 Volt Storage Battery
RATING	50 Watts, .5 Amp. @117 Volts AC (Transmit); 42 Watts, .42 Amp. @117 Volts AC (Receive) (or) 5 Amp. @12.6 Volts DC (Transmit or Receive)
FREQ. RANGE	Any one of Citizens Band Channels 1 thru 22

NOTICE

ONLY THOSE PERSONS PROPERLY LICENSED BY FCC ARE PERMITTED TO MAKE CRYSTAL SUBSTITUTION OR EFFECT REPAIRS ON THE TRANSMITTER PORTION OF THIS UNIT.

HOWARD W. SAMS & CO., INC. Indianapolis 6, Indiana

KZ599

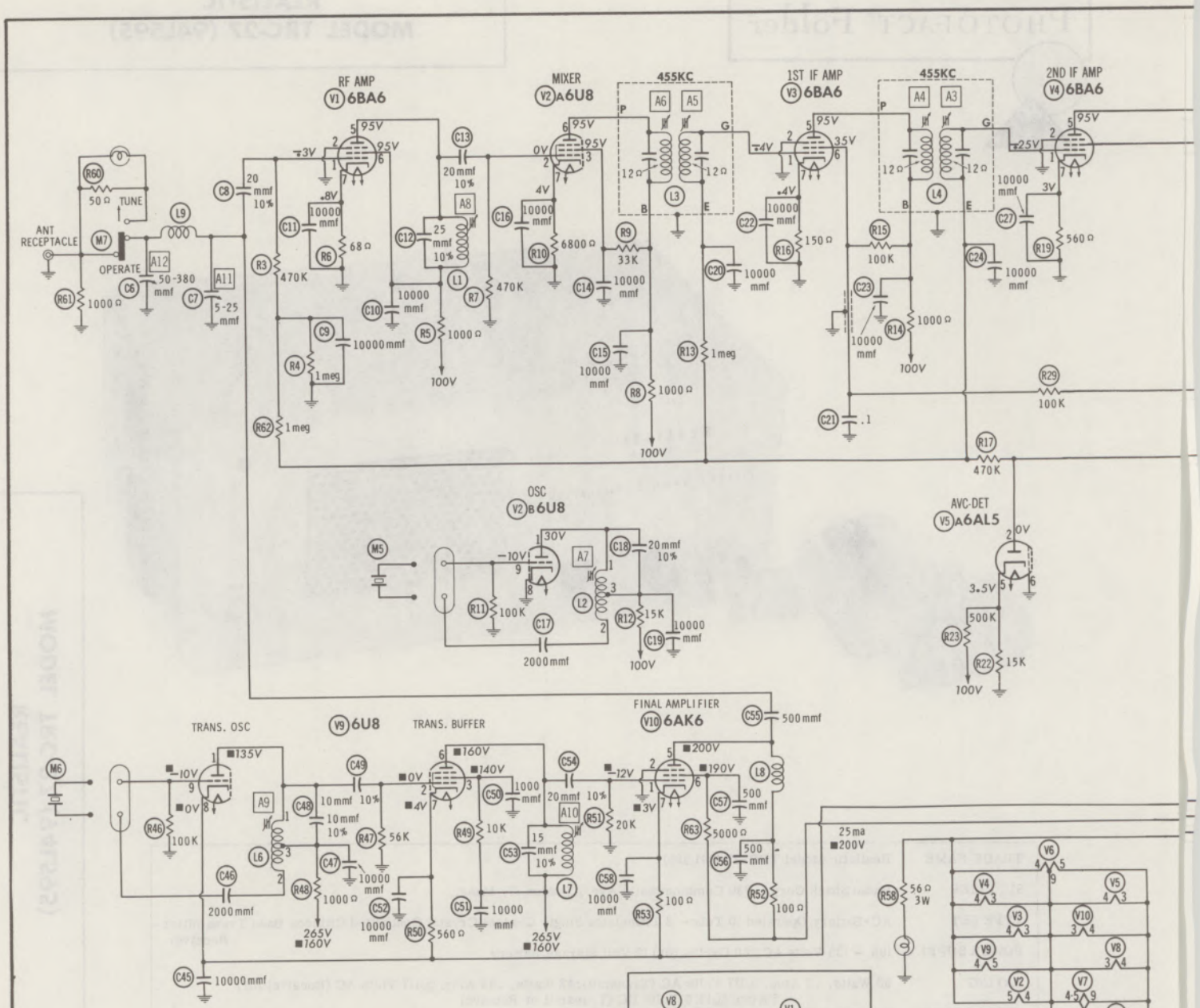

RESISTANCE READINGS

ITEM	TUBE	Pin 1	Pin 2	Pin 3	Pin 4	Pin 5	Pin 6	Pin 7	Pin 8	Pin 9
V1	6BA6	1.3meg	0Ω	0Ω	.1Ω	†1000Ω	†1000Ω	68Ω		
V2	6U8	†15K	470K	†34K	.1Ω	.1Ω	†1000Ω	6800Ω	0Ω	100K
V3	6BA6	2meg	0Ω	.1Ω	.1Ω	†1000Ω	†100K	150Ω		
V4	6BA6	1meg	0Ω	.1Ω	.1Ω	†1000Ω	†1000Ω	560Ω		
V5	6AL5	1.3meg	1meg	0Ω	.1Ω	15K	0Ω	500K		
V6	12AX7	†220K	0Ω	27K	.1Ω	0Ω	†200K	†200K	1meg	.1Ω
V7	12AX7	†225K	470K	■5000Ω	.1Ω	.1Ω	†225K	22K	5000Ω	0Ω
V8	6AQ5	470K	500Ω	.1Ω	0Ω	†1700Ω	†1500Ω	470K		
V9	6U8	†7500Ω	56K	†16K	.1Ω	.1Ω	†6500Ω	■560Ω	0Ω	100K
V10	6AK6	20K	0Ω	.1Ω	0Ω	†1800Ω	†6700Ω	■100Ω		

TRANSISTOR CIRCUIT RESISTANCE NOT GIVEN BECAUSE OF THE WIDE VARIATION IN INTERNAL TRANSISTOR RESISTANCE.
ALL MEASUREMENTS TAKEN IN "RECEIVE" POSITION UNLESS OTHERWISE INDICATED.
† MEASURED FROM JUNCTION OF R56 AND C31 (100VOLT SOURCE).
‡ MEASURED FROM OUTPUT OF M1.
■ MEASURED IN "TRANSMITT" POSITION.

A PHOTOFACT STANDARD NOTATION SCHEMATIC

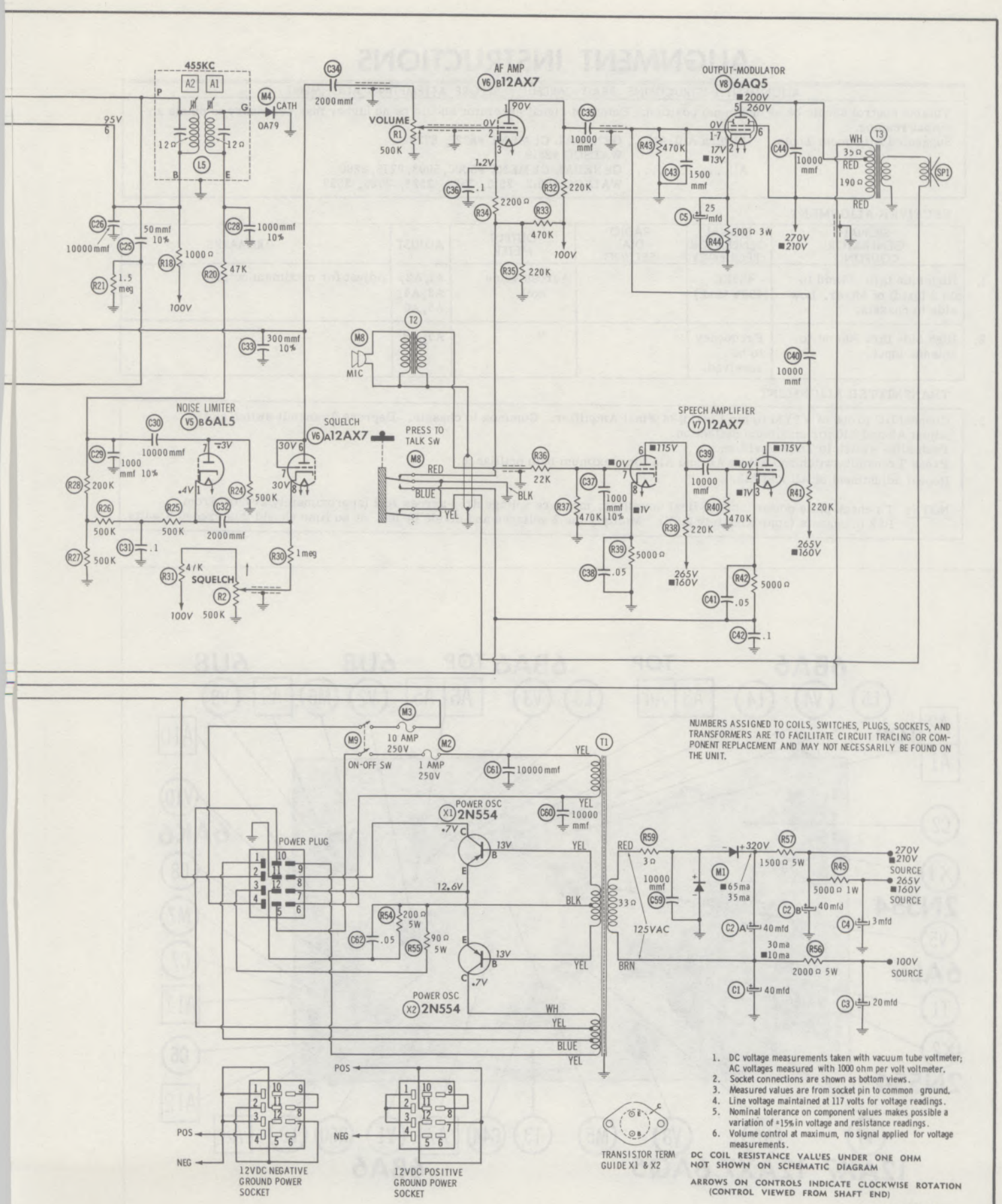

NUMBERS ASSIGNED TO COILS, SWITCHES, PLUGS, SOCKETS, AND TRANSFORMERS ARE TO FACILITATE CIRCUIT TRACING OR COMPONENT REPLACEMENT AND MAY NOT NECESSARILY BE FOUND ON THE UNIT.

1. DC voltage measurements taken with vacuum tube voltmeter; AC voltages measured with 1000 ohm per volt voltmeter.
2. Socket connections are shown as bottom views.
3. Measured values are from socket pin to common ground.
4. Line voltage maintained at 117 volts for voltage readings.
5. Nominal tolerance on component values makes possible a variation of ±15% in voltage and resistance readings.
6. Volume control at maximum, no signal applied for voltage measurements.

DC COIL RESISTANCE VALUES UNDER ONE OHM NOT SHOWN ON SCHEMATIC DIAGRAM

ARROWS ON CONTROLS INDICATE CLOCKWISE ROTATION (CONTROL VIEWED FROM SHAFT END)

REALISTIC
MODEL TRC-27 (94L595)

ALIGNMENT INSTRUCTIONS

ALIGNMENT INSTRUCTIONS—READ CAREFULLY BEFORE ATTEMPTING ALIGNMENT

Volume control should be at maximum position. Output of signal generator should be no higher than necessary to obtain an output reading.

Suggested Alignment Tools: A1 thru A10, A12... GENERAL CEMENT #8721, 8722
WALSCO #2519
A11..... GENERAL CEMENT #5000, 5003, 8276, 8290
WALSCO #2512, 2515, 2522, 2523, 2525, 2537

RECEIVER ALIGNMENT

	SIGNAL GENERATOR COUPLING	SIGNAL GENERATOR FREQUENCY	RADIO DIAL SETTING	OUTPUT METER	ADJUST	REMARKS
1.	High side thru .01mfd to pin 2 (grid) of Mixer. Low side to chassis.	455KC (400~ Mod.)		Across voice coil.	A1, A2, A3, A4, A5, A6	Adjust for maximum output.
2.	High side thru 50mmf to antenna input.	Frequency to be received.		"	A7, A8	"

TRANSMITTER ALIGNMENT

3. Connect DC probe of VTVM to pin 1 (grid) of Final Amplifier. Common to chassis. Depress Transmit switch and adjust A9 and A10 for maximum deflection.
Push slide switch to Tune Position.
Press Transmit switch and adjust A11 and A12 for maximum bulb brilliance.
Repeat adjustment of A11 and A12.

NOTE: To check plate power input to final amplifier, measure voltage drop across R52 (approximately 2V) and from R52 to chassis (approximately 215V). Multiply the 2 voltages and divide by 100. At no time should this exceed 5 watts.

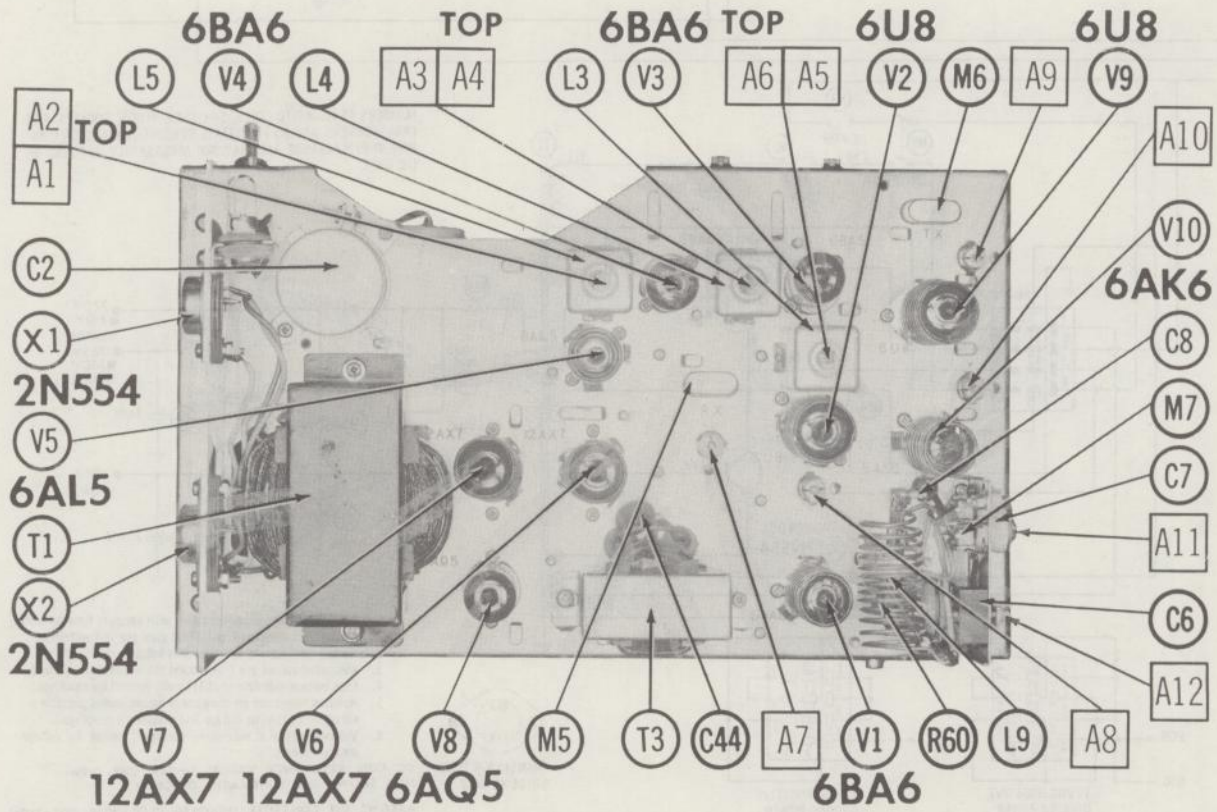

CHASSIS—TOP VIEW

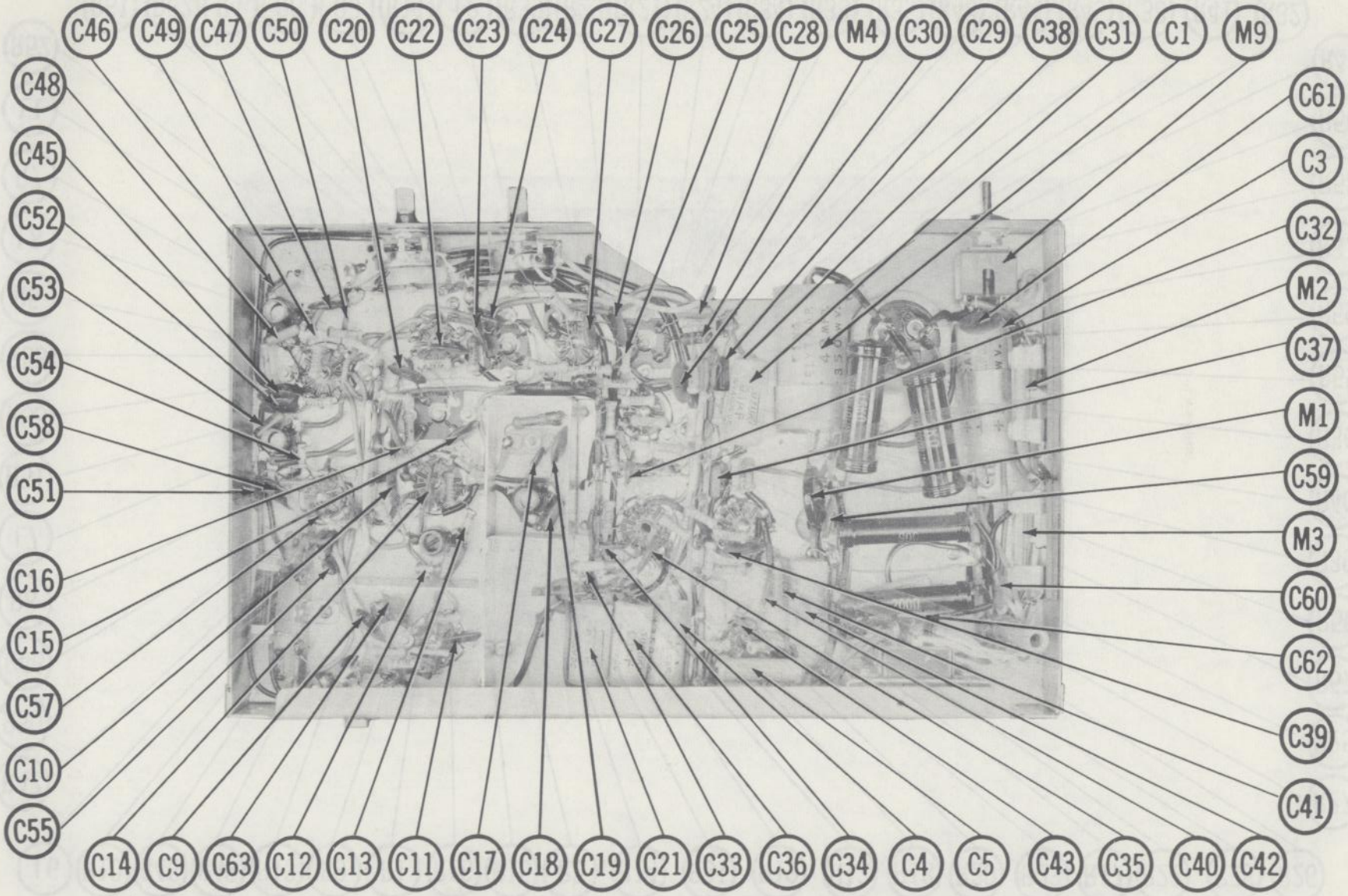

CHASSIS BOTTOM VIEW-CAPACITOR & MISC. IDENT.

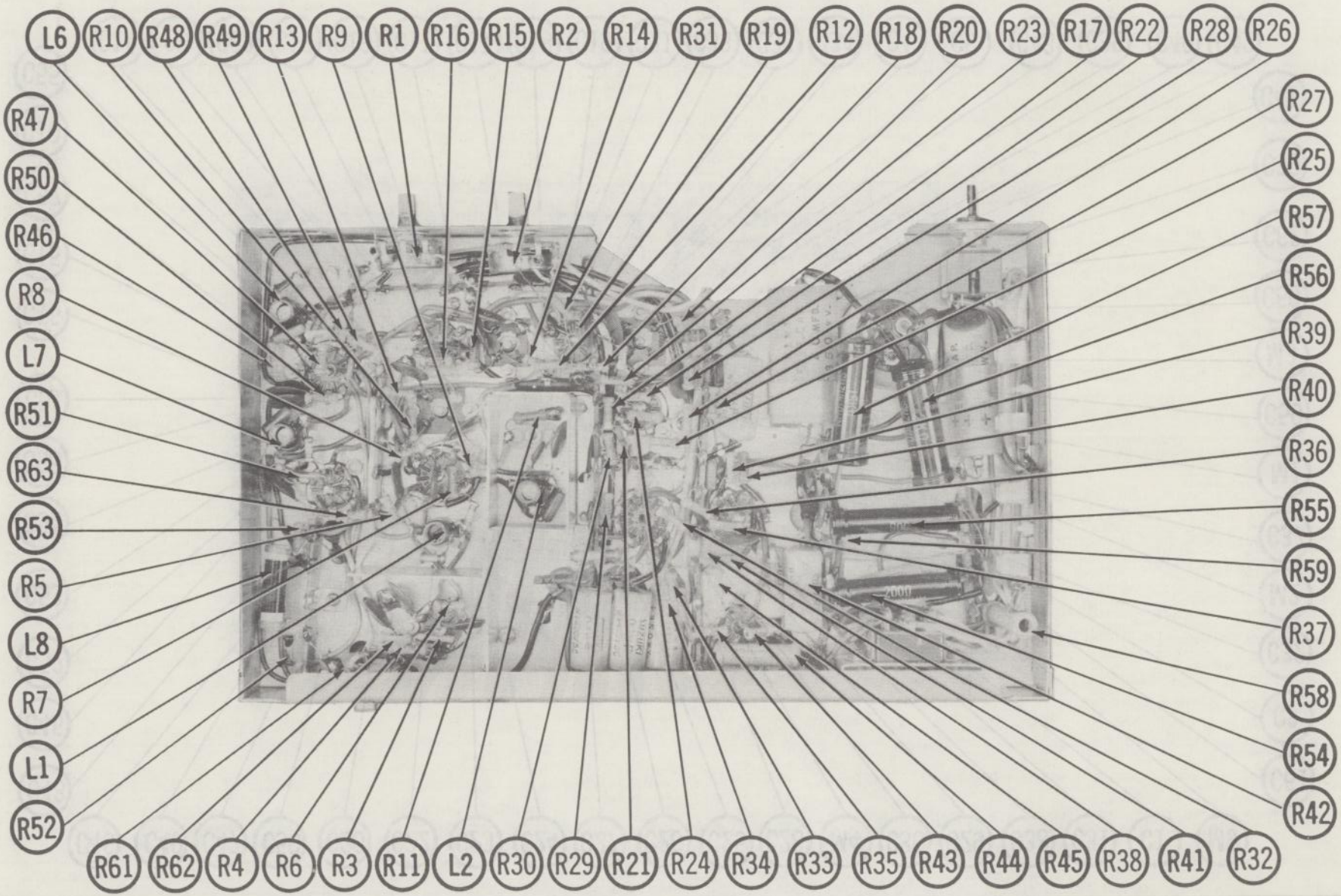

CHASSIS BOTTOM VIEW-RESISTOR & INDUCTOR IDENT.

PARTS LIST AND DESCRIPTIONS

TUBES

ITEM No.	USE	TYPE	ITEM No.	USE	TYPE
	GENERAL ELECTRIC		RAYTHEON	SYLVANIA	
V1	RF Amplifier	6BA6	V6	Squelch - AF Amp.	12AX7
V2	Mixer-Osc.	6U8	V7	Speech Amplifier	12AX7
V3	1st IF Amplifier	6BA6	V8	Output-Modulator	6AQ5
V4	2nd IF Amplifier	6BA6	V9	Trans. Osc. -Buffer	6U8
V5	AVC Det. -Noise Limiter	6AL5	V10	Final Amplifier	6AK6

TRANSISTORS

ITEM No.	ORIG. TYPE	USE	REPLACEMENT DATA			NOTES
			RCA PART No.	RAYTHEON PART No.	SYLVANIA PART No.	
X1	2N554	Power Osc.				PNP
X2	2N554	Power Osc.				PNP

ELECTROLYTIC CAPACITORS

ITEM No.	RATING		REPLACEMENT DATA							
	CAP.	VOLT.	REALISTIC PART No.	AEROVOX PART No.	CORNELL-DUBILIER PART No.	MALLORY PART No.	PYRAMID PART No.	SPRAGUE PART No.	NOTES
C1	40	350		PRS1670	BR4035	TC78	TD-40-350	TVA-1611	
C2A	②40	450		AFH2-57	B0450	FP238	TMD-2650	TVL-2764	
B	①40	450							
C3	20	350		PRS1735	BR2035	TC65	TD-20-350	TVA-1608	
C4	3	350		PRS1600	BR435	TC697	TD-4-450	TVA-1601	
C5	25	25		PRS1260	BBR25-25	TC26	TD-25-25	TVA-1205	

FIXED CAPACITORS

Capacity values given in the rating column are in mfd. for Paper Capacitors, and in mmfd. for Mica and Ceramic Capacitors.

ITEM No.	RATING	REMARKS	REPLACEMENT DATA					
			AEROVOX PART No.	CENTRALAB PART No.	CORNELL-DUBILIER PART No.	ELMENCO PART No.	MALLORY PART No.	SPRAGUE PART No.
C6	50-380					465		
C7	5-25					461		
C8	20 10%		NPO-SI 20	D6-200	L10Q2	CCD-200	GP420	10TS-Q20
C9	10000		BPD-01	DD-103	BYA10S1	CCD-103	B-110	5HK-S10
C10	10000		BPD-01	DD-103	BYA10S1	CCD-103	B-110	5HK-S10
C11	10000		BPD-01	DD-103	BYA10S1	CCD-103	B-110	5HK-S10
C12	25 10%		NPO-SI 25	TCZ-25	C10Q25C	CCTO-240	CNO-425	10TCC-Q25
C13	20 10%		NPO-SI 20	D6-200	L10Q2	CCD-250	GP420	10TS-Q20
C14	10000		BPD-01	DD-103	BYA10S1	CCD-103	B-110	5HK-S10
C15	10000		BPD-01	DD-103	BYA10S1	CCD-103	B-110	5HK-S10
C16	10000		BPD-01	DD-103	BYA10S1	CCD-103	B-110	5HK-S10
C17	2000		BPD-002	DD-202	BYA10D2	CCD-202	B-220	10TS-Q20
C18	20 10%		1469-00002	TCZ-20	22R5Q2	CM-19B-200K	CNO-422	MS-42
C19	10000		BPD-01	DD-103	BYA10S1	CCD-103	B-110	5HK-S10
C20	10000		BPD-01	DD-103	BYA10S1	CCD-103	B-110	5HK-S10
C21	.1 400V		P488N-1	DF-104	CUB4P1	4DP-3-104	GEM-401	4TM-P10
C22	10000		BPD-01	DD-103	BYA10S1	CCD-103	B-110	5HK-S10
C23	10000		BPD-01	DD-103	BYA10S1	CCD-103	B-110	5HK-S10
C24	10000		BPD-01	DD-103	BYA10S1	CCD-103	B-110	5HK-S10
C25	50 10%		NPO-SI 50	TCZ-50	L10Q5	CCD-500	GP450	10TS-Q50
C26	10000		BPD-01	DD-103	BYA10S1	CCD-103	B-110	5HK-S10
C27	10000		BPD-01	DD-103	BYA10S1	CCD-103	B-110	5HK-S10
C28	1000 10%		1469-001		5R5D1	CM-19B-102K	MCB255	MS-21
C29	1000 10%		1469-001		5R5D1	CM-19B-102K	MCB255	MS-21
C30	10000		BPD-01	DD-103	BYA10S1	CCD-103	B-110	5HK-S10
C31	.1 400V		P488N-1	DF-104	CUB4P1	4DP-3-104	GEM-401	4TM-P10
C32	2000		BPD-002	DD-202	BYA10D2	CCD-202	B-220	5HK-D20
C33	300 10%			TCZ-300	L10T3	CCD-301	GP330	10TS-T30
C34	2000		BPD-002	DD-202	BYA10D2	CCD-202	B-220	5HK-D20
C35	10000		BPD-01	DD-103	BYA10S1	CCD-103	B-110	5HK-S10
C36	.1 400V		P488N-1	DF-104	CUB4P1	4DP-3-104	GEM-401	4TM-P10
C37	1000 10%		1469-001		5R5D1	CM-19B-102K	MCB255	MS-21

FIXED CAPACITORS (cont)

ITEM No.	RATING	REMARKS	REPLACEMENT DATA					
			AEROVOX PART No.	CENTRALAB PART No.	CORNELL-DUBILIER PART No.	ELMENCO PART No.	MALLORY PART No.	SPRAGUE PART No.
C38	.05 400V		P488N-05	DD-503	CUB4S5	4DP-3-503	GEM-415	4TM-S50
C39	10000		BPD-01	DD-103	BYA10S1	CCD-103	B-110	5HK-S10
C40	10000		BPD-01	DD-103	BYA10S1	CCD-103	B-110	5HK-S10
C41	.05 400V		P488N-05	DD-503	CUB4S5	4DP-3-503	GEM-415	4TM-S50
C42	.1 400V		P488N-1	DF-104	CUB4P1	4DP-3-104	GEM-401	4TM-P10
C43	1500		BPD-0015	DD-152	BYA10D15	CCD-152	B-215	5HK-D15
C44	10000		BPD-01	DD-103	BYA10S1	CCD-103	B-110	5HK-S10
C45	10000		BPD-01	DD-103	BYA10S1	CCD-103	B-110	5HK-S10
C46	2000		BPD-002	DD-202	BYA10D2	CCD-202	B-220	5HK-D20
C47	10000		BPD-01	DD-103	BYA10S1	CCD-103	B-110	5HK-S10
C48	10 10%		1469-00001	TCZ-10	22R5Q1	CM-19B-100K	MCB215	MS-41
C49	10 10%		NPO-SI 10	D6-100	L10Q1	CCD-100	GP410	10TS-Q10
C50	1000		BPD-001	DD-102	BYA10D1	CCD-102	B-210	5HK-D10
C51	10000		BPD-01	DD-103	BYA10S1	CCD-103	B-110	5HK-S10
C52	10000		BPD-01	DD-103	BYA10S1	CCD-103	B-110	5HK-S10
C53	15 10%		1469-000015	TCZ-15	22R5Q15	CM-19B-150K	CNO-415	MS-415
C54	20 10%		NPO-SI 20	TCZ-20	L10Q2	CCD-200	GP420	10TS-Q20
C55	500		BPD-0005	DD-501	BYA10T5	CCD-501	GP350	10TS-T50
C56	500		BPD-0005	DD-501	BYA10T5	CCD-501	GP350	10TS-T50
C57	500		BPD-0005	DD-501	BYA10T5	CCD-501	GP350	10TS-T50
C58	10000		BPD-01	DD-103	BYA10S1	CCD-103	B-110	5HK-S10
C59	10000		BPD-01	DD-103	BYA10S1	CCD-103	B-110	5HK-S10
C60	10000		BPD-01	DD-103	BYA10S1	CCD-103	B-110	5HK-S10
C61	10000		BPD-01	DD-103	BYA10S1	CCD-103	B-110	5HK-S10
C62	.05 400V		P488N-05	DD-503	CUB4S5	4DP-3-503	GEM-415	4TM-S50
C63	10000		BPD-01	DD-103	BYA10S1	CCD-103	B-110	5HK-S10

CONTROLS

ITEM No.	RATING		REPLACEMENT DATA					INSTALLATION NOTES
	RESIST-ANCE	WATTS	REALISTIC PART No.	CENTRALAB PART No.	CLAROSTAT PART No.	CTS-IRC PART No.	MALLORY PART No.	
R1A	500K	½		B-60	A47-500K-Z	Q13-133	U48	Volume
B	Shaft			Not Req.	KSS-3	Not Req.	Not Req.	
R2A	500K	½		B-59	A47-500K-S	Q11-13 3	U50	Squelch
B	Shaft			Not Req.	KSS-3	Not Req.	Not Req.	

RESISTORS

All wattages 1/2 watt, or less, unless otherwise listed.

ITEM No.	RATING	REPLACEMENT DATA			ITEM No.	RATING	REPLACEMENT DATA		
		IRC PART No.	WORKMAN TV PART No.	REMARKS			IRC PART No.	WORKMAN TV PART No.	REMARKS
R3	470K				R26	500K			
R4	1meg				R27	500K			
R5	1000Ω				R28	200K			
R6	68Ω				R29	100K			
R7	470K				R30	1meg			
R8	1000Ω				R31	47K			
R9	33K				R32	220K			
R10	6800Ω				R33	470K			
R11	100K				R34	2200Ω			
R12	15K				R35	220K			
R13	1meg				R36	22K			
R14	1000Ω				R37	470K			
R15	100K				R38	220K			
R16	150Ω				R39	5000Ω			
R17	470K				R40	470K			
R18	1000Ω				R41	220K			
R19	560Ω				R42	5000Ω			
R20	47K				R43	470K			
R21	1.5meg				R44	500Ω 3W	PW5-500	5W-SQ-500	
R22	15K				R45	5000Ω 1W			
R23	500K				R46	100K			
R24	500K				R47	56K			
R25	500K				R48	1000Ω			

PARTS LIST AND DESCRIPTIONS (Continued)

RESISTORS (cont)

ITEM No.	RATING	REPLACEMENT DATA		
		IRC PART No.	WORKMAN TV PART No.	REMARKS
R49	10K			
R50	560Ω			
R51	20K			
R52	100Ω			
R53	100Ω			
R54	200Ω 5W	PW5-200	5W-SQ-200	
R55	90Ω 5W	PW5-90	5W-SQ-90	
R56	2000Ω 5W	PW5-2000	5W-SQ-2000	

ITEM No.	RATING	REPLACEMENT DATA		
		IRC PART No.	WORKMAN TV PART No.	REMARKS
R57	1500Ω 5W	PW5-1500	5W-SQ-1500	
R58	56Ω 3W	PW5-56	5W-SQ-56	
R59	3Ω			
R60	50Ω			
R61	1000Ω			
R62	1meg			
R63	5000Ω			

COILS (RF-IF)

ITEM No.	USE	REPLACEMENT DATA					NOTES
		REALISTIC PART No.	Merit PART No.	Miller PART No.	Stancor PART No.	Workman TV PART No.	
L1	RF						
L2	Osc. Plate						
L3	1st IF						
L4	2nd IF						
L5	3rd IF						
L6	Osc. Plate						
L7	Buffer Plate						
L8	RF Choke						
L9	Ant. Loading						

TRANSFORMER (POWER)

ITEM No.	RATING			REPLACEMENT DATA					NOTES
	INPUT	SEC. 1	SEC. 2	REALISTIC PART No.	Merit PART No.	Stancor PART No.	Thordarson PART No.	Triad PART No.	
T1	117V ⓐ .5A (or) 12.6VCT ⓐ 3.6A	125V ⓐ .230A AC	12.6VCT ⓐ 1.8A (AC Only)						

TRANSFORMER (MIC.)

ITEM No.	TURNS RATIO		REPLACEMENT DATA					NOTES
	PRI.	SEC.	REALISTIC PART No.	Merit PART No.	Stancor PART No.	Thordarson PART No.	Triad PART No.	
T2	1	18						Part of M8
	IMP.	IMP.						
	40Ω	50K						

TRANSFORMER (AUDIO OUTPUT)

ITEM No.	IMPEDANCE		REPLACEMENT DATA					NOTES
	PRI.	SEC.	REALISTIC PART No.	Merit PART No.	Stancor PART No.	Thordarson PART No.	Triad PART No.	
T3	7000Ω Tap ⓐ 5000Ω	3-4Ω			A-3817①			① Drill New Mounting Hole (s).

SPEAKER

ITEM No.	TYPE			REPLACEMENT DATA		NOTES
	SIZE	FIELD	V. C. IMP.	REALISTIC PART No.	QUAM PART No.	
SP1	4"	PM	3-4Ω		4A07	

POWER RECTIFIERS

ITEM No.	RATING	REPLACEMENT DATA				NOTES
	CURRENT (Measured)	REALISTIC PART No.	RCA PART No.	SARKES TARZIAN PART No.	SYLVANIA PART No.	
M1	.065A					Dual Selenium

FUSES

ITEM No.	TYPE	RATING	REPLACEMENT DATA					
			REALISTIC PART No.		LITTELFUSE PART No.		BUSS PART No.	
			FUSE	HOLDER	FUSE	HOLDER	FUSE	HOLDER
M2		1A 250V						
M3		10A 250V						

SIGNAL DIODES

ITEM No.	ORIG. TYPE	REPLACEMENT DATA				NOTES
		REALISTIC PART No.	GENERAL ELECTRIC PART No.	RAYTHEON PART No.	SYLVANIA PART No.	
M4	OA79			1N295	1N295	Detector (Pigtail)

MISCELLANEOUS

ITEM No.	PART NAME	REALISTIC PART No.	NOTES
M5	Crystal		Receive
M6	Crystal		Transmit
M7	Switch		Operate-Tune (SPDT Slide Type)
M8	Microphone Assy.		Includes Press-to-talk Switch and T2
M9	Switch		Power Off-On (Toggle)

WIRING DATA

General-use Unshielded Hook-up Wire ..... Use BELDEN No. 8530 (Solid) Available in Ten Colors
8524 (Stranded) Available in Ten Colors

Power Cord ..... Use BELDEN No. 1765-B (6 Ft. Length)
1725-K (7½ Ft. Length)

REGENCY MODELS
CB-27, CBM-27-6, CBM-27-12

TRADE NAME	Regency Models CB-27, CBM-27-6, CBM-27-12
MANUFACTURER	Regency, I.D.E.A., 7900 Pendleton Pike, Indianapolis, Indiana
TYPE SET	AC (or Battery) Operated 9 Tube Crystal Controlled Citizens Band Transmitter-Receiver
POWER SUPPLY	Model CB-27: 110–120 Volts AC Model CBM-27-6 : 6Volts DC Model CBM-27-12 : 12Volts DC
RATING	50 Watts, .45 Amp. @117 Volts AC (Receive) 55 Watts, .5 Amp. @117 Volts AC (Transmit)
TUNING RANGE	Any one of Citizens Band Channels 1 thru 22

NOTICE

ONLY THOSE PERSONS PROPERLY LICENSED BY FCC ARE PERMITTED TO EFFECT REPAIRS OR MAKE CRYSTAL SUBSTITUTION ON THIS TYPE EQUIPMENT.

DIAL CORD STRINGING

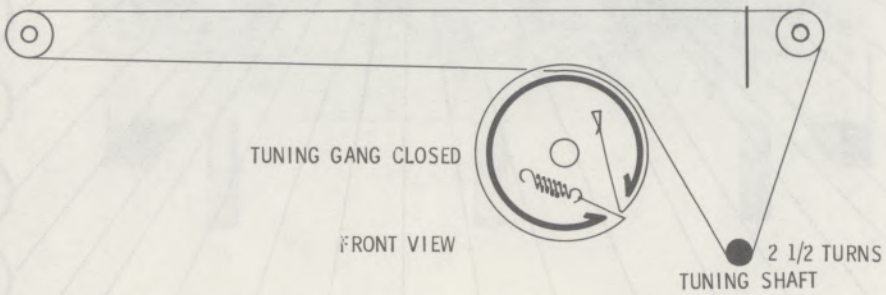

HOWARD W. SAMS & CO., INC. Indianapolis 6, Indiana

KZ487

REGENCY MODELS
CB-27, CBM-27-6, CBM-27-12

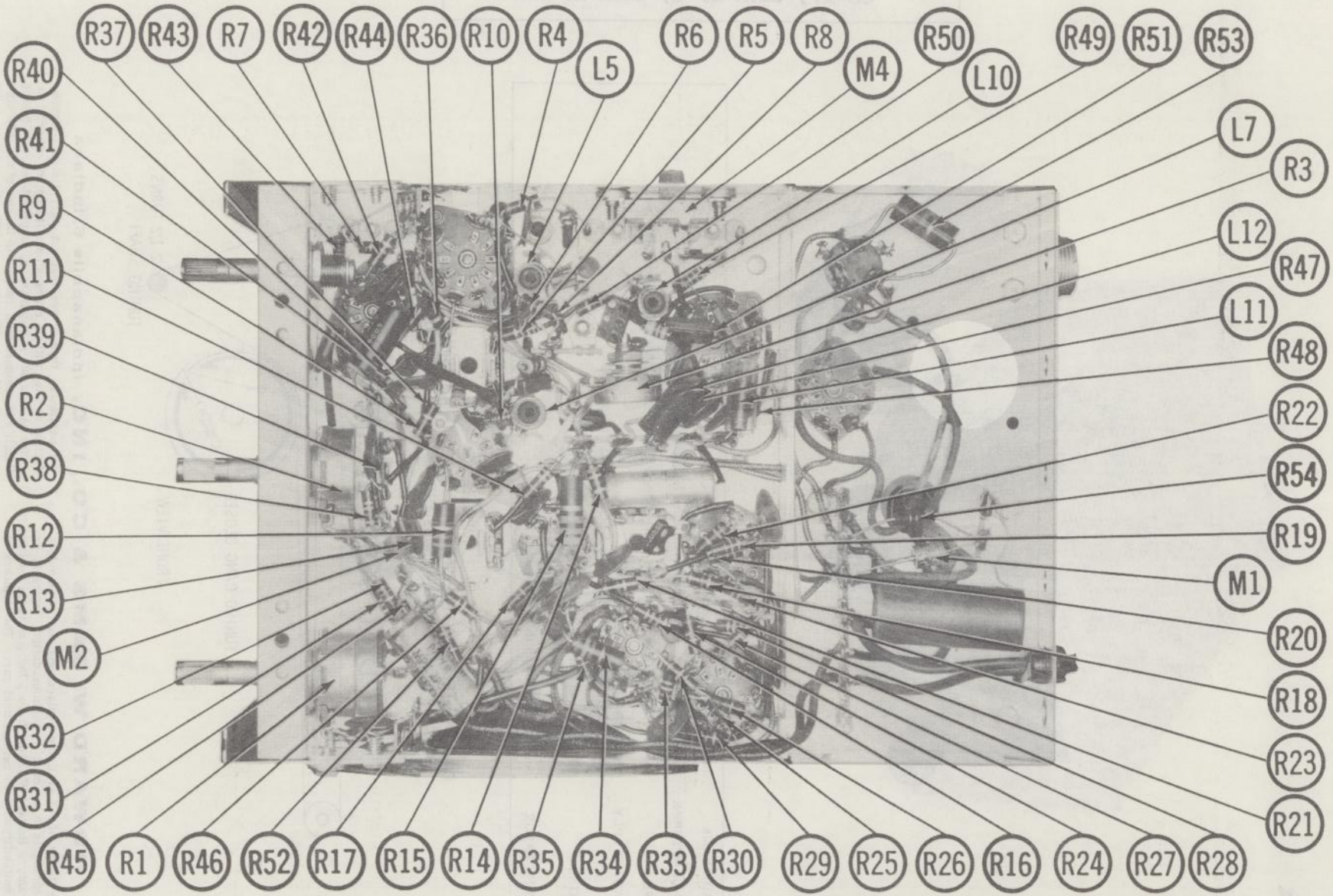

CHASSIS BOTTOM VIEW-RESISTOR, INDUCTOR & MISC. IDENTIFICATION

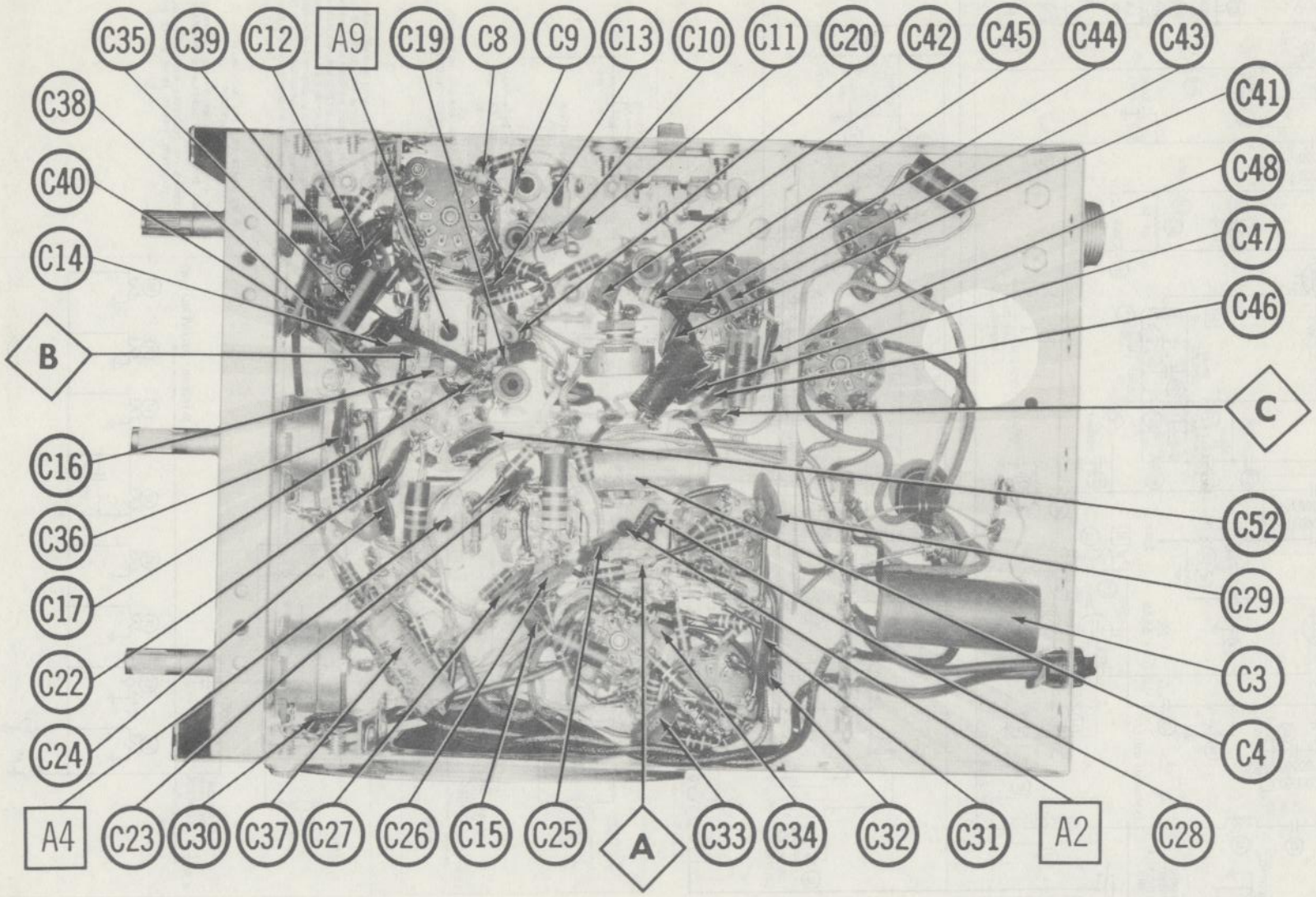

CHASSIS BOTTON VIEW-ALIGNMENT & CAPACITOR IDENTIFICATION

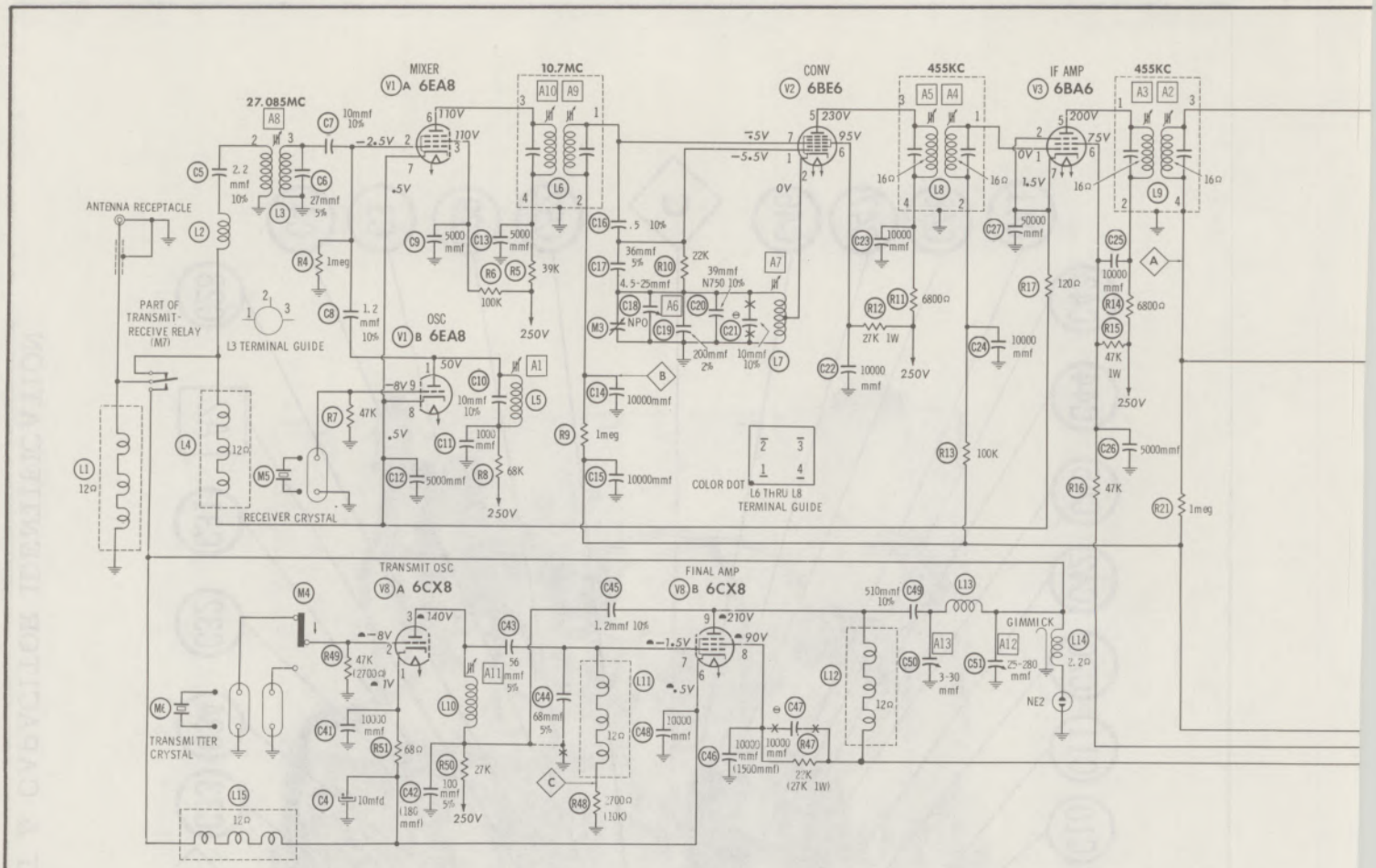

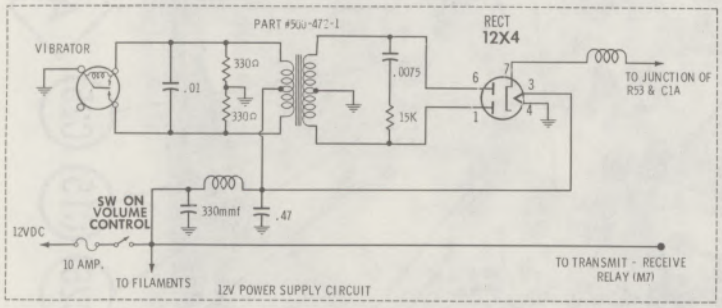

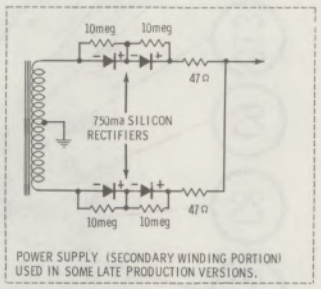

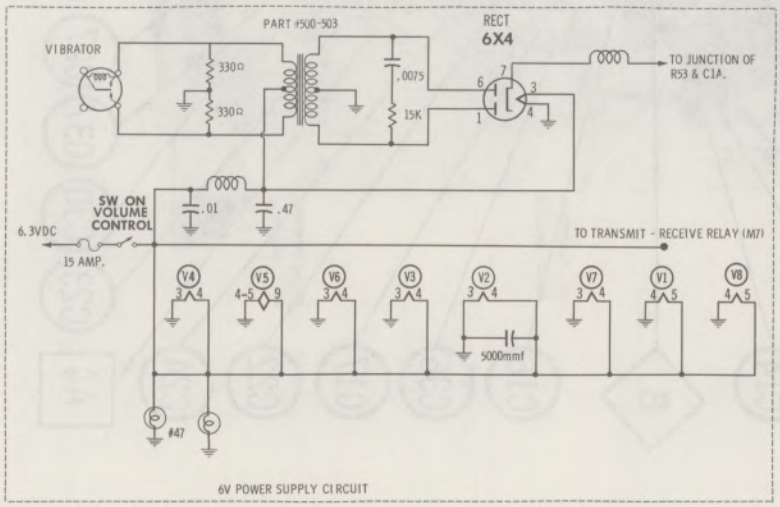

1. DC voltage measurements taken with vacuum tube voltmeter; AC voltages measured with 1000 ohm per volt voltmeter.
2. Socket connections are shown as bottom views.
3. Measured values are from socket pin to common ground.
4. Line voltage maintained at 117 volts for voltage readings.
5. Nominal tolerance on component values makes possible a variation of ±15% in voltage and resistance readings.
6. Volume control at maximum, no signal applied for voltage measurements.

⊖ SEE PARTS LIST FOR ALTERNATE VALUE OR APPLICATION

DC COIL RESISTANCE VALUES UNDER ONE OHM NOT SHOWN ON SCHEMATIC DIAGRAM

ARROWS ON CONTROLS INDICATE CLOCKWISE ROTATION (CONTROL VIEWED FROM SHAFT END)

A PHOTOFACT STANDARD NOTATION SCHEMATIC

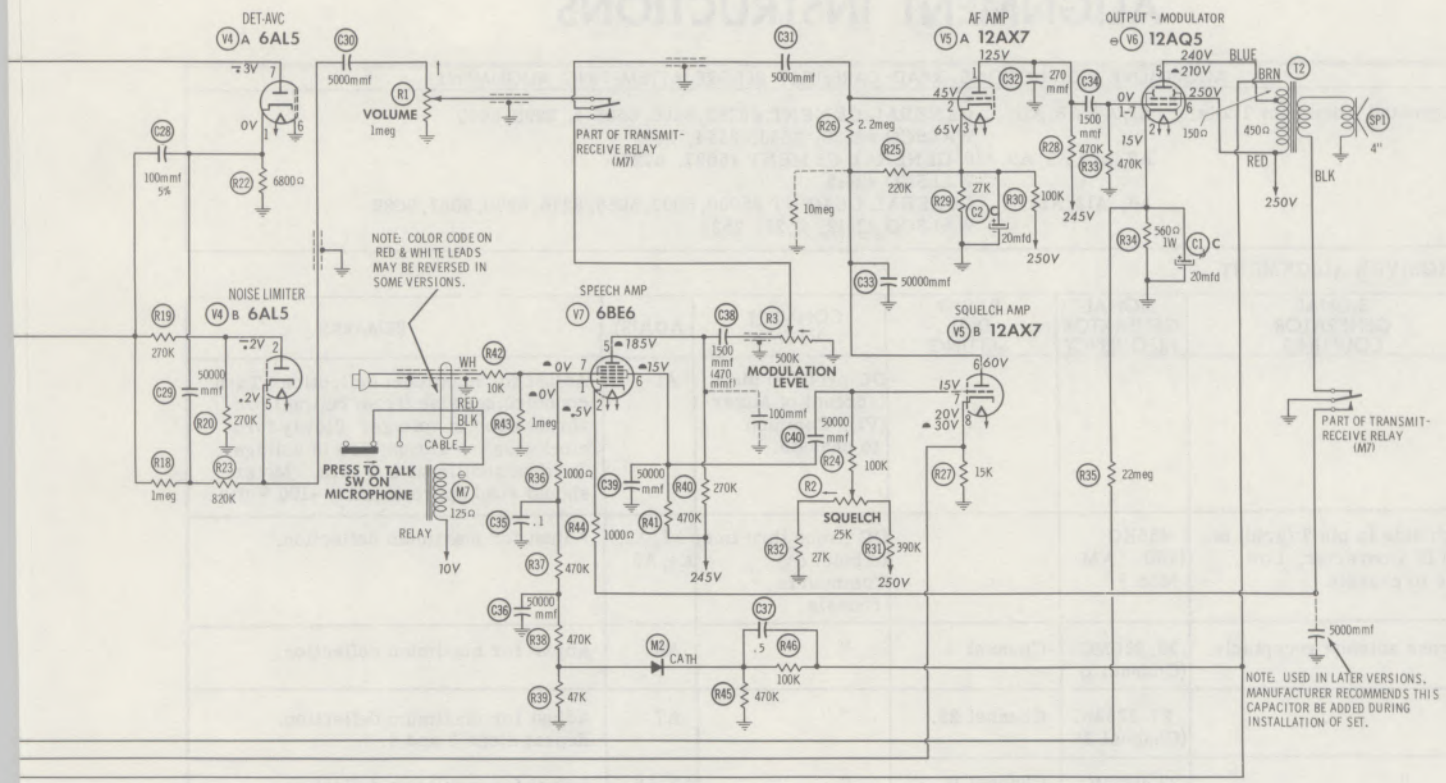

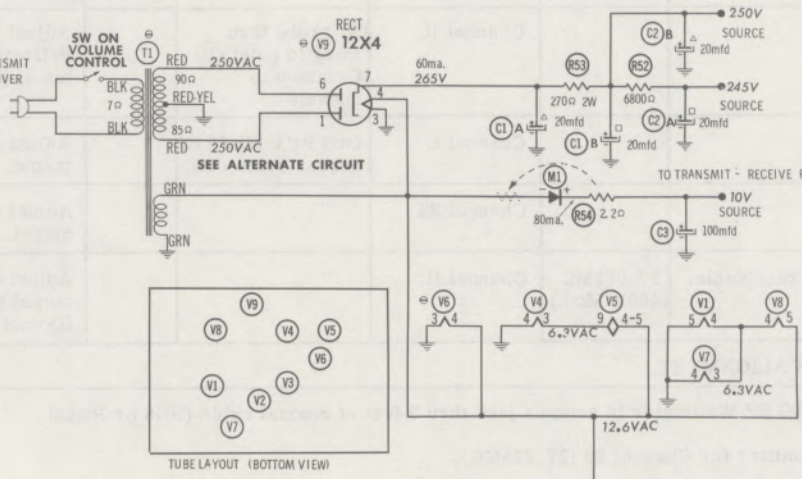

TUBE LAYOUT (BOTTOM VIEW)

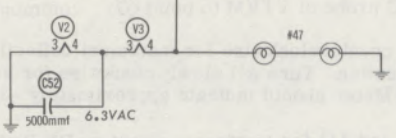

NUMBERS ASSIGNED TO COILS, SWITCHES, PLUGS, SOCKETS, AND TRANSFORMERS ARE TO FACILITATE CIRCUIT TRACING OR COMPONENT REPLACEMENT AND MAY NOT NECESSARILY BE FOUND ON THE UNIT.

RESISTANCE READINGS

ITEM	TUBE	Pin 1	Pin 2	Pin 3	Pin 4	Pin 5	Pin 6	Pin 7	Pin 8	Pin 9
V1	6EA8	†68K	1meg	†100K	1Ω	0Ω	†39K	30Ω	30Ω	47K
V2	6BE6	22K	0Ω	0Ω	1Ω	†6800Ω	†27K	2.5meg		
V3	6BA6	1.6meg	120Ω	1Ω	1Ω	†6800Ω	†47K	120Ω		
V4	6AL5	6800Ω	270K	1Ω	0Ω	2.3meg	0Ω	550K		
V5	12AX7	†470K	2.4meg	25K	.1Ω	.1Ω	250K	140K	15K	1Ω
V6	12AQ5	470K	560Ω	0Ω	.1Ω	†720Ω	270Ω	NC		
V7	6BE6	1meg	☂1000Ω	1Ω	0Ω	†280K	†470K	1meg		
V8	6CX8	☂100Ω	47K	†27K	1Ω	.1Ω	☂30Ω	2700Ω	†23K	†870Ω
V9	12X4	85Ω	NC	0Ω	.1Ω	NC	80Ω	¶		

ALL MEASUREMENTS MADE IN "RECEIVE" POSITION UNLESS OTHERWISE DESIGNATED.
¶ THIS READING WILL VARY DEPENDING UPON THE CONDITION OF THE ELECTROLYTIC IN THE CIRCUIT.
☂ MADE IN "TRANSMIT" POSITION.
† MEASURED FROM PIN 7 OF V9.

NC NO CONNECTION

REGENCY MODELS
CB-27, CBM-27-6, CBM-27-12

ALIGNMENT INSTRUCTIONS

ALIGNMENT INSTRUCTIONS—READ CAREFULLY BEFORE ATTEMPTING ALIGNMENT

Suggested Alignment Tools:
A1, A7, A8, A11. . . .GENERAL CEMENT #8282, 8606, 8606-L, 9295, 9440
WALSCO #2526, 2543, 2544, 2545
A2 thru A5, A9, A10. GENERAL CEMENT #5097, 8727
WALSCO #2515
A6, A12, A13. . . . . GENERAL CEMENT #5000, 5003, 5066, 8276, 8290, 9087, 9089
WALSCO #2512, 2525, 2528

RECEIVER ALIGNMENT

	SIGNAL GENERATOR COUPLING	SIGNAL GENERATOR FREQUENCY	RADIO DIAL SETTING	CONNECT VTVM	ADJUST	REMARKS
1.				DC probe to pin 3 (screen) of Mixer (V1). Common to chassis.	A1	Adjust for maximum deflection. Turn counterclockwise (from bottom) for abrupt drop in voltage. Slowly turn clockwise for abrupt rise in voltage. Turn an additional 1/4 turn. Meter should read approximately +100 Volts.
2.	High side to pin 7 (grid) of 2nd IF Converter. Low side to chassis.	455KC (400∿ AM Mod.)		DC probe thru 1meg to point Ⓐ. Common to chassis.	A2, A3, A4, A5	Adjust for maximum deflection.
3.	Across antenna receptacle.	26.965MC (Channel 1)	Channel 1.	"	A6	Adjust for maximum deflection.
4.	"	27.225MC (Channel 2)	Channel 22.	"	A7	Adjust for maximum deflection. Repeat Steps 3 and 4.
5.	"	27.085MC (Channel 11)	Channel 11 Signal.	"	A8, A9, A10	Adjust for maximum deflection. Repeat Step 1.
6.			Channel 11.	DC probe thru 1meg to point Ⓑ. Common to chassis.		Adjust Capacitor C16 for maximum deflection by twisting leads. (Do not short capacitor).
7.			Channel 1.	OUTPUT METER across voice coil.		Adjust A10 for maximum noise output.
8.			Channel 22	"		Adjust A9 for maximum noise output.
9.	Across antenna receptacle.	27.085MC (400∿ Mod.)	Channel 11.	"		Adjust Capacitor C5 for maximum output by twisting capacitor leads. (Do not short capacitor).

TRANSMITTER ALIGNMENT

1. Connect a 50Ω RF Wattmeter to antenna jack thru 3 feet of coaxial cable (RG8 or RG58).
2. Set up transmitter for Channel 22 (27.225MC).
3. Connect DC probe of VTVM to point Ⓒ, common to chassis.
4. Adjust A11 counterclockwise for maximum deflection. Continue turning all counterclockwise for an abrupt drop in meter deflection. Turn A11 slowly clockwise for an abrupt rise in meter deflection. Continue turning A11 clockwise 1/4 turn. (Meter should indicate approximately -3V).
5. Adjust A12 and A13 for maximum output on RF Wattmeter (2 Watts minimum).

PARTS LIST AND DESCRIPTIONS

TUBES

ITEM No.	USE (GENERAL ELECTRIC • RAYTHEON • SYLVANIA •)	TYPE	ITEM No.	USE (GENERAL ELECTRIC • RAYTHEON • SYLVANIA •)	TYPE
V1	Mixer-Oscillator	6EA8	V6	Output — Modulator	12AQ5 (6AQ5) *
V2	IF Conv.	6BE6	V7	Speech Amplifier	6BE6
V3	IF Amplifier	6BA6	V8	Trans. Osc. — Final Amp.	6CX8
V4	Det. -AVC-Noise Limiter	6AL5	V9	Rectifier	12X4 (6X4) *
V5	AF Amp. -Squelch Amp.	12AX7			

* Used in 6 Volt versions.

ELECTROLYTIC CAPACITORS

ITEM No.	RATING CAP.	RATING VOLT.	REPLACEMENT DATA REGENCY PART No.	AEROVOX PART No.	CORNELL-DUBILIER PART No.	MALLORY PART No.	PYRAMID PART No.	SPRAGUE PART No.	NOTES
C1A	▲20	350	300-773-2	AFH3-28-30	B0300	FP227	TMT-3432	TVL-3639.8	
B	■20	350			BBR20-150	TT50X20			
C	20	50							
C2A	■20	350	300-773-2	AFH3-28-30	B0300	FP227	TMT-3432	TVL-3639.8	
B	▲20	350			BBR20-150	TT50X20			
C	20	50							
C3	100	25	300-718-5	PRS1270	BBR100-25	TC2501	TD-100-25	TVA-1207	
C4	10	150	300-718-6	SRE150V10	NLW10-150	TT150X10	MLV10-150	TE-1507	

FIXED CAPACITORS

Capacity values given in the rating column are in mfd. for Paper Capacitors, and in mmfd. for Mica and Ceramic Capacitors.

ITEM No.	RATING	REMARKS	REPLACEMENT DATA AEROVOX PART No.	CENTRALAB PART No.	CORNELL-DUBILIER PART No.	ELMENCO PART No.	MALLORY PART No.	SPRAGUE PART No.
C5	2.2 10%		NPO-SI 2.2	TCZ-2R2	C10V22C	CCTO-2R2	CNO-522	10TCC-V22
C6	27 5%		1469-000027	TCZ-27	22R5Q27	CM-19B-270J	CNO-427	MS-427
C7	10 10%		1469-00001	TCZ-10	22R5Q1	CM-19B-100K	MCB215	MS-410
C8	1.2 10%		NPO-SI 1.5	TCZ-1R5	C10V15C		CNO-515	10TCC-V12
C9	5000		BPD-005	DD-502	BYA10D5	CCD-502	B-250	5HK-D50
C10	10 10%		1469-00001	TCZ-10	22R5Q1	CM-19B-100K	MCB215	MS-410
C11	1000		BPD-001	DD-102	BYA10D1	CCD-102	B-210	5HK-D10
C12	5000		BPD-005	DD-502	BYA10D5	CCD-502	B-250	5HK-D50
C13	5000		BPD-005	DD-502	BYA10D5	CCD-502	B-250	5HK-D50
C14	10000		BPD-01	DD-103	BYA10S1	CCD-103	B-110	5HK-S10
C15	10000		BPD-01	DD-103	BYA10S1	CCD-103	B-110	5HK-S10
C16	.5 10%		NPO-SI .5	TCZ-R5				
C17	36 5%		1469-000036	TCZ-36	22R5Q36	CM-19B-360J		MS-436
C18	4.5-25 NPO			822-AZ				
C19	200 2%					VCM-20-201G	MCE237	
C20	39 N750 10%		N750-SI 39	TCN-39	C10Q39U	CCTN-390	CN7-439	10TCU-Q39
C21	100 10%	Note 1	1469-0001	TCZ-100	22R5T1	CM-19B-101K	MCB235	MS-31
C22	10000		BPD-01	DD-103	BYA10S1	CCD-103	B-110	5HK-S10
C23	10000		BPD-01	DD-103	BYA10S1	CCD-103	B-110	5HK-S10
C24	10000		BPD-01	DD-103	BYA10S1	CCD-103	B-110	5HK-S10
C25	10000		BPD-01	DD-103	BYA10S1	CCD-103	B-110	5HK-S10
C26	5000		BPD-005	DD-502	BYA10D5	CCD-502	B-250	5HK-D50
C27	50000		BPD-05	DD-503	CUB4S5	4DP-3-503	GP150	5HK-S50
C28	100 5%		1469-0001	TCZ-100	22R5T1	CM-19B-101J	MCE235	MS-31
C29	50000		BPD-05	DD-503	CUB4S5	4DP-3-503	GP150	5HK-S50
C30	5000		BPD-005	DD-502	BYA10D5	CCD-502	B-250	5HK-D50
C31	5000		BPD-005	DD-502	BYA10D5	CCD-502	B-250	5HK-D50
C32	270		DI-270	DD-271	L10T27	CCD-271	B-327	10TS-T27
C33	50000		BPD-05	DD-503	CUB4S5	4DP-3-503	GP150	5HK-S50
C34	1500		BPD-0015	DD-152	BYA10D15	CCD-152	B-215	5HK-D15
C35	.1 200V		P288N-1	DF-104	CUB2P1	2DP-3-104	GEM-201	2TM-P10
C36	50000		BPD-05	DD-503	CUB4S5	4DP-3-503	GP150	5HK-S50
C37	.5 200V		P288N-5		CUB2P5	2DP-5-504	GEM-205	2TM-P50
C38	1500	(470) †	BPD-0015	DD-152	BYA10D15	CCD-152	B-215	5HK-D15
C39	50000		BPD-05	DD-503	CUB4S5	4DP-3-503	GP150	5HK-S50
C40	50000		BPD-05	DD-503	CUB4S5	4DP-3-503	GP150	5HK-S50
C41	10000		BPD-01	DD-103	BYA10S1	CCD-103	B-110	5HK-S10
C42	100 5%	(180) †	1469-0001	TCZ-100	22R5T1	CM-19B-101J	MCE235	MS-31
C43	56 5%		1469-000056	TCZ-56	22R5Q56	CM-19B-560J	CNO-456	MS-456
C44	68 5%		1469-000068	TCZ-68	22R5Q68	CM-19B-680J	CNO-468	MS-468
C45	1.2 10%		NPO-SI 1.5	TCZ-1R5	C10V15C		CNO-515	10TCC-V12
C46	10000	(1500) †	BPD-01	DD-103	BYA10S1	CCD-103	B-110	5HK-S10
C47	10000	Note 1	BPD-01	DD-103	BYA10S1	CCD-103	B-110	5HK-S10
C48	10000		BPD-01	DD-103	BYA10S1	CCD-103	B-110	5HK-S10

CHASSIS—TOP VIEW

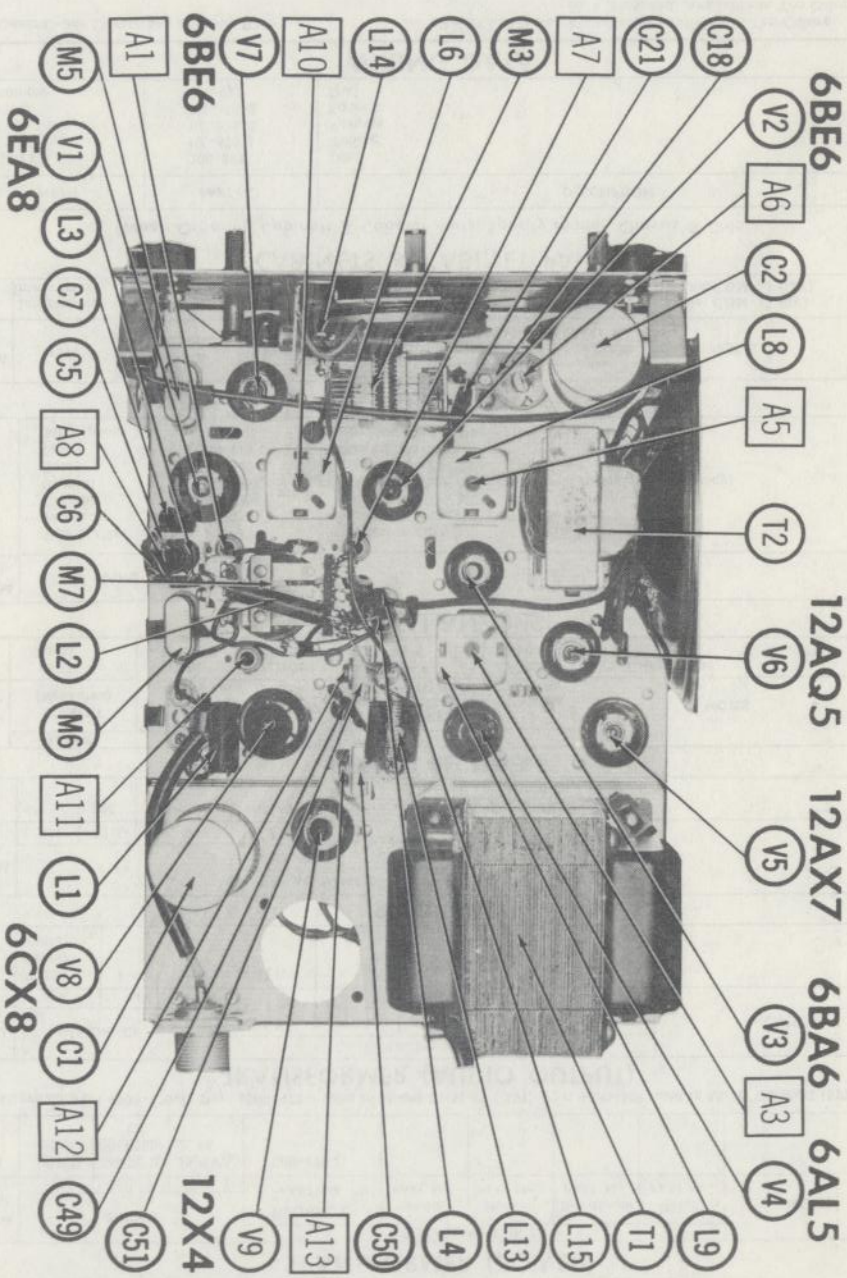

PARTS LIST AND DESCRIPTIONS (Continued)

FIXED CAPACITORS (cont)

ITEM No.	RATING	REMARKS	REPLACEMENT DATA					
			AEROVOX PART No.	CENTRALAB PART No.	CORNELL-DUBILIER PART No.	ELMENCO PART No.	MALLORY PART No.	SPRAGUE PART No.
C49	510 10%		1469-000510		5R5T51	CM-19B-511K	MCB245	MS-351
C50	3-30					461		
C51	25-280					464		
C52	5000		BPD-005	DD-502	BYA10D5	CCD-502	B-250	5HK-D50

Note 1. Not used in some versions.
† Alternate Value.

CONTROLS

ITEM No.	RATING		REPLACEMENT DATA					INSTALLATION NOTES
	RESISTANCE	WATTS	REGENCY PART No.	CENTRALAB PART No.	CLAROSTAT PART No.	CTS-IRC PART No.	MALLORY PART No.	
R1A	1meg	½	100-093-8	B-70-S	A47-1meg-Z	Q13-137	U53	Volume
B	Shaft			Not Req.	KSS-3	Not Req.	Not Req.	
C	Switch			Not Req.	SWE-12	76-1	US-26	Power Off-On
R2A	25K	½	100-093-9	B-27	A47-25K-V		U28	Squelch
B	Shaft			Not Req.	KSS-3		Not Req.	
R3	500K	1/4	100-596-1	JL-504	44-500K-W		MLCN55A	Modulation Level

RESISTORS

All wattages 1/2 watt, or less, unless otherwise listed.

ITEM No.	RATING	REPLACEMENT DATA			ITEM No.	RATING	REPLACEMENT DATA		
		IRC PART No.	WORKMAN TV PART No.	REMARKS			IRC PART No.	WORKMAN TV PART No.	REMARKS
R4	1meg				R30	100K			
R5	39K				R31	390K			
R6	100K				R32	27K			
R7	47K				R33	470K			
R8	68K				R34	560Ω 1W			
R9	1meg				R35	22meg			
R10	22K				R36	1000Ω			
R11	6800Ω				R37	470K			
R12	27K 1W				R38	470K			
R13	100K				R39	47K			
R14	6800Ω				R40	270K			
R15	47K 1W				R41	470K			
R16	47K				R42	10K			
R17	120Ω				R43	1meg			
R18	1meg				R44	1000Ω			
R19	270K				R45	470K			
R20	270K				R46	100K			
R21	1meg				R47	22K			(27K 1W) †
R22	6800Ω				R48	2700Ω			(10K) †
R23	820K				R49	47K			(2700Ω) †
R24	100K				R50	27K			
R25	220K				R51	68Ω			
R26	2.2meg				R52	6800Ω			
R27	15K				R53	270Ω 2W			
R28	470K				R54	2.2Ω			
R29	27K								

† Alternate Value.

COILS (RF-IF)

ITEM No.	USE	REPLACEMENT DATA				NOTES
		REGENCY PART No.	Merit PART No.	Miller PART No.	Stancor PART No.	
L1	RF Choke(209uh)	101-379-1	TV-197	6154	RTC-8586	
L2	RF Choke (10uh)	300-303-1	BC-566	4612	RTC-8522	
L3	Ant.	101-388				
L4	RF Choke(209uh)	101-379-1	TV-197	6154	RTC-8586	
L5	1st Receiver Osc.	300-882	TV-118	6171-A	RTC-8609	
L6	1st IF (10.7MC)	1607-6	FM-254	1463	RTC-8599	
L7	2nd Receiver Osc.	300-881				
L8	1st IF (455KC)	1655-6	BC-352	12-C1	RTC-8632	
L9	2nd IF (455KC)	1655-6	BC-353	12-C2	RTC-8633	
L10	Trans. Osc.	300-880	TV-118	6171-A	RTC-8609	
L11	RF Choke(209uh)	101-379-1	TV-197	6154	RTC-8586	
L12	RF Choke (209uh)	101-379-1	TV-197	6154	RTC-8586	
L13	Final Output	101-390				
L14	RF Choke	101-380				
L15	RF Choke(209uh)	101-379-1	TV-197	6154	RTC-8586	

TRANSFORMER (POWER)

ITEM No.	RATING			REPLACEMENT DATA					NOTES
	PRI.	SEC. 1	SEC. 2	REGENCY PART No.	Merit PART No.	Stancor PART No.	Thordarson PART No.	Triad PART No.	
T1	117V ⓐ .5A	500VCT ⓐ .075A DC	12.6V ⓐ 1.8A	500-470①					

① Alternate Part #500-470-1. Part #500-472-1 used in Model CBM-27 (12V). Part #500-503 used in Model CBM-27 (6V).

TRANSFORMER (AUDIO OUTPUT)

ITEM No.	IMPEDANCE		REPLACEMENT DATA					NOTES
	PRI.	SEC.	REGENCY PART No.	Merit PART No.	Stancor PART No.	Thordarson PART No.	Triad PART No.	
T2	7500Ω Tap ⓐ 5600Ω	3-4Ω	(Part of SP1)					

SPEAKER

ITEM No.	TYPE			REPLACEMENT DATA		NOTES
	SIZE	FIELD	V. C. IMP.	REGENCY PART No.	QUAM PART No.	
SP1	4"	PM	3-4Ω	500-467 *	4A07 ‡	* Includes T2 ‡ Cut Mounting Tab to Fit.

POWER RECTIFIERS

ITEM No.	RATING	REPLACEMENT DATA				NOTES
	CURRENT (Measured)	REGENCY PART No.	RCA PART No.	SARKES TARZIAN PART No.	SYLVANIA PART No.	
M1	.080A	SD-91 *	1N1763 *	2F4 *	SR200 *	* Silicon Type
M2	Signal	F-6 *	1N1763 *	F6 *	SR500 *	

MISCELLANEOUS

ITEM No.	PART NAME	REGENCY PART No.	NOTES
M3	Tuning Cap.	300-876	Oscillator Tuning
M4	Switch	SS-32	Receive-Transmit (SPDT Slide Type)
M5	Crystal	300-886	Receive (37.795 MC)
M6	Crystal	300-887	Transmit (When ordering, specify required frequency)
M7	Relay	101-436	Model CBM-27 (12V)
	Relay	101-514	Model CBM-27 (6V)
	Microphone	101-391	Includes Cord & Push-To-Talk Switch

VIBRATOR

ITEM No.	TYPE	INPUT VOLTS	FREQUENCY	REPLACEMENT DATA				NOTES
				REGENCY PART No.	CORNELL-DUBILIER PART No.	MALLORY PART No.	RADIART PART No.	
	Interrupter	6	115∿		5301	1601	5301	Model CBM-27 (6V)
	Interrupter	12	115∿		6301	G1601	6301	Model CBM-27 (12V)

CABINETS & CABINET PARTS

(When Ordering Cabinets & Cabinet Parts, Specify Model, Chassis & Color)

NAME	PART NO.	DESCRIPTION
Glass	300-883	Dial
Knob	101-375-1	Tuning
Knob	101-375-2	Volume
Knob	101-375-3	Squelch
Pointer	100-823	Dial

WIRING DATA

General-use Unshielded Hook-up Wire ..... Use BELDEN No. 8530 (Solid) Available in Ten Colors
8524 (Stranded) Available in Ten Colors
Power Cord ..... Use BELDEN No. 1765-B (6 Ft. Length)
1725-K (7½ Ft. Length)

PHOTOFACT® Folder

U.S.L. MODEL TR-800

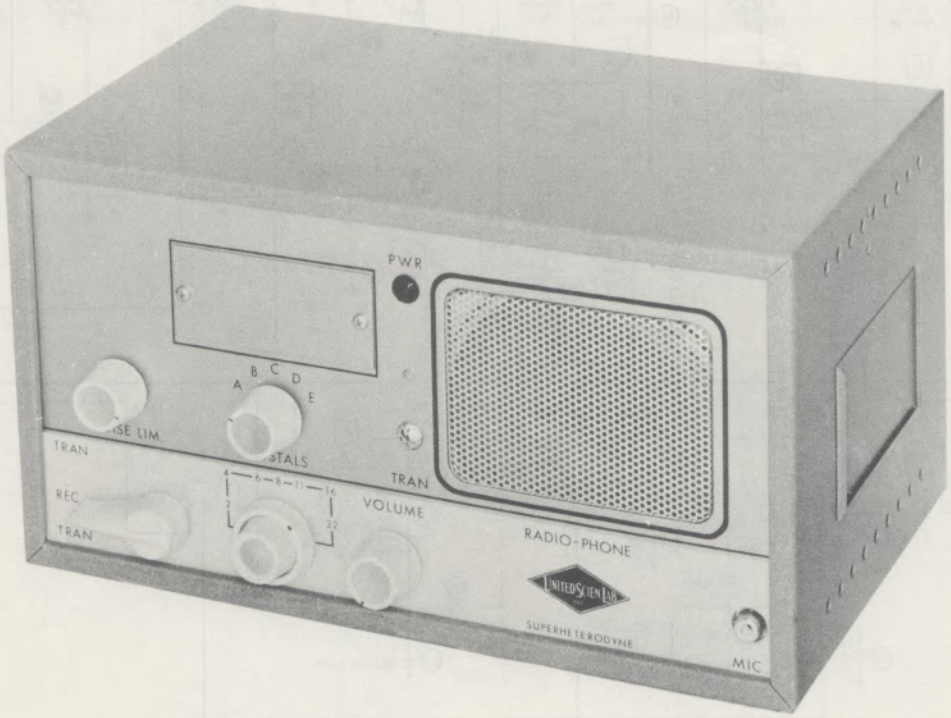

TRADE NAME	U.S.L. Model TR-800
MANUFACTURER	United Scientific Laboratories Inc., 35-15 37th Ave., Long Island City 1, N. Y.
TYPE SET	AC-Battery Operated Crystal Controlled 6 Tube Citizens Band Transmitter-Receiver
POWER SUPPLY	110 – 120 Volts AC, 50-60 Cycles (or) 6 or 12 Volt Storage Battery
RATING	40 Watts, .38 Amp. @117 Volts AC
FREQ. RANGE	TRANSMITTER: Any 5 of Citizens Band Channels 1 thru 22 RECEIVER: All Citizens Band Channels 1 thru 22

NOTICE

ONLY THOSE PERSONS PROPERLY LICENSED BY FCC ARE PERMITTED TO MAKE CRYSTAL SUBSTITUTION OR EFFECT REPAIRS ON THE TRANSMITTER PORTION OF THIS UNIT.

U.S.L. MODEL TR-800

HOWARD W. SAMS & CO., INC. Indianapolis 6, Indiana

KZ385

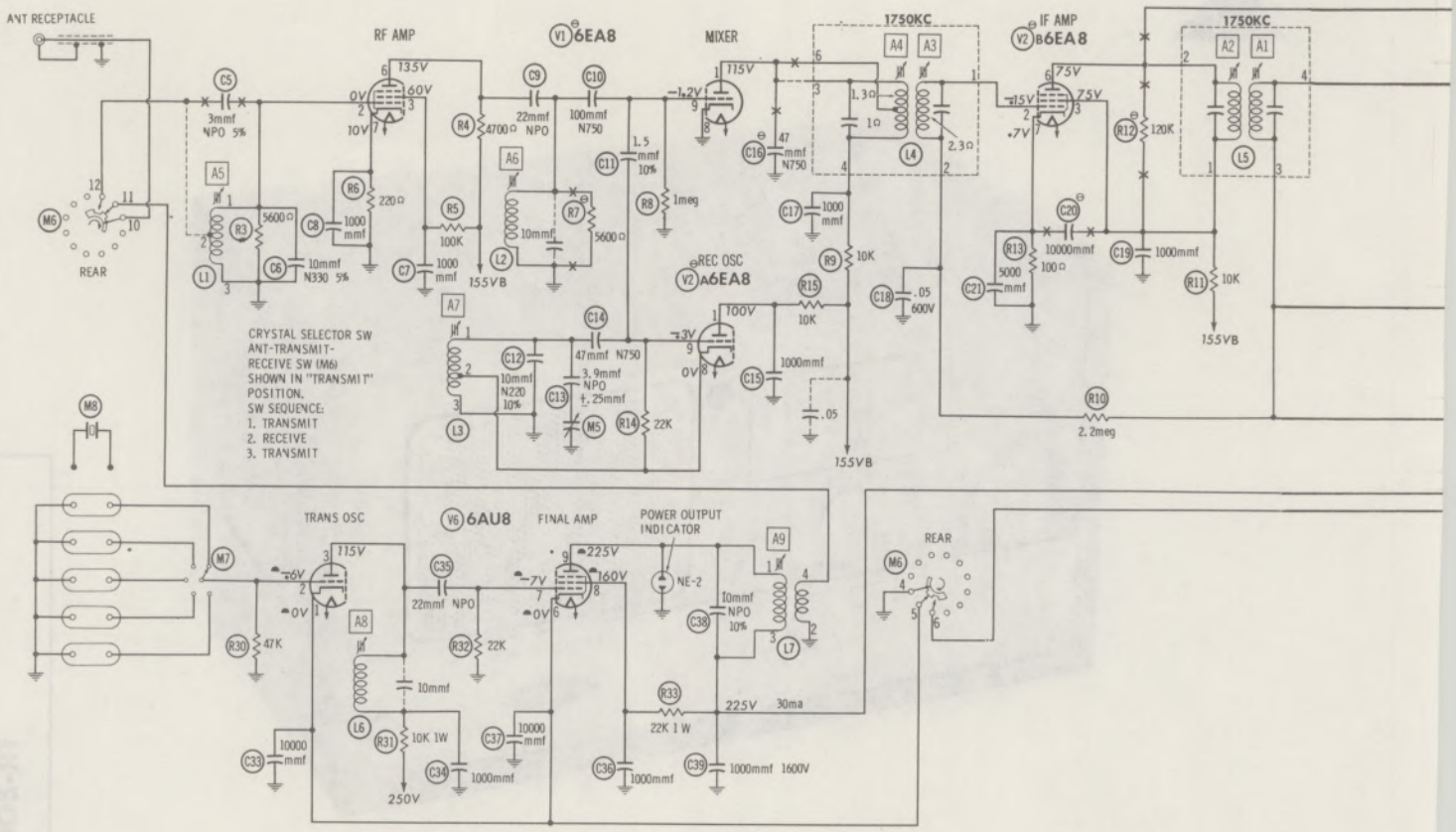

NUMBERS ASSIGNED TO COILS, SWITCHES, PLUGS, SOCKETS, AND TRANSFORMERS ARE TO FACILITATE CIRCUIT TRACING OR COMPONENT REPLACEMENT AND MAY NOT NECESSARILY BE FOUND ON THE UNIT.

RESISTANCE READINGS

ITEM	TUBE	Pin 1	Pin 2	Pin 3	Pin 4	Pin 5	Pin 6	Pin 7	Pin 8	Pin 9
V1	6EA8	†15K	0Ω	†100K	0Ω	.1Ω	†10K	220Ω	0Ω	1meg
V2	6EA8	†15K	2.8meg	†15K	0Ω	.1Ω	†15K	100Ω	0Ω	22K
V3	6AL5	2.1meg	500K	.1Ω	0Ω	2.1meg	0Ω	500K		
V4	ECC83 12AX7	▲†475K	4.7meg	0Ω	.1Ω	.1Ω	†225K	470K	3300Ω	0Ω
V5	6V6GT	0Ω	.1Ω	†630Ω	†330Ω	470K	TP	0Ω	470Ω	
V6	6AU8	▲0Ω	47K	†10K	.1Ω	0Ω	▲0Ω	22K	†22K	†680Ω

ALL MEASUREMENTS MADE IN "RECEIVE" POSITION UNLESS OTHERWISE DESIGNATED.
▲ MEASURED IN "TRANSMIT" POSITION.
† MEASURED FROM OUTPUT OF M1.
NC NO CONNECTION
TP TIE POINT

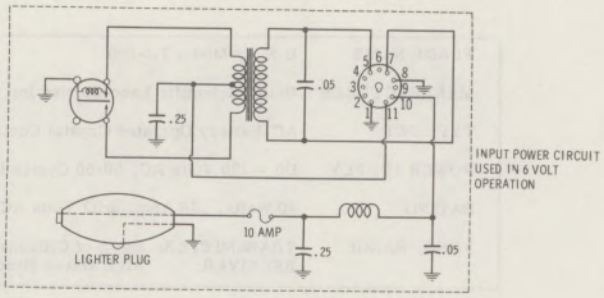

INPUT POWER CIRCUIT USED IN 6 VOLT OPERATION

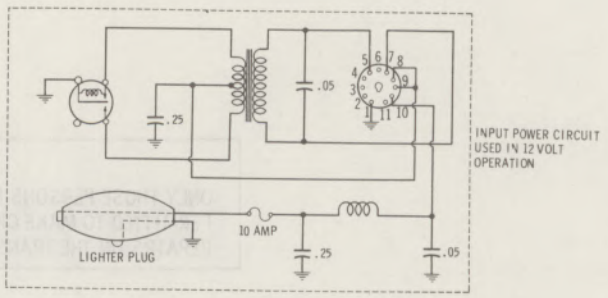

INPUT POWER CIRCUIT USED IN 12 VOLT OPERATION

A PHOTOFACT STANDARD NOTATION SCHEMATIC

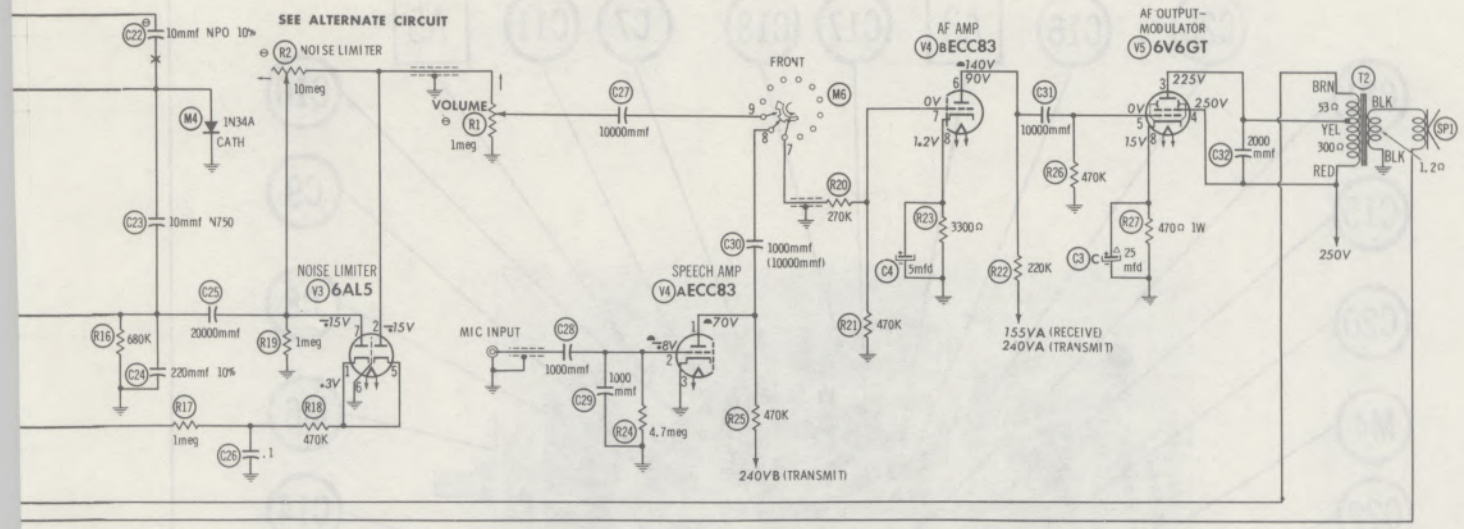

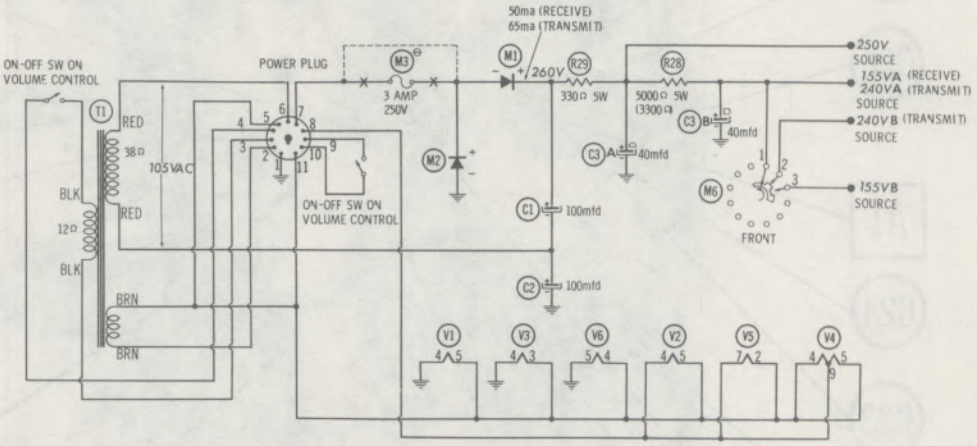

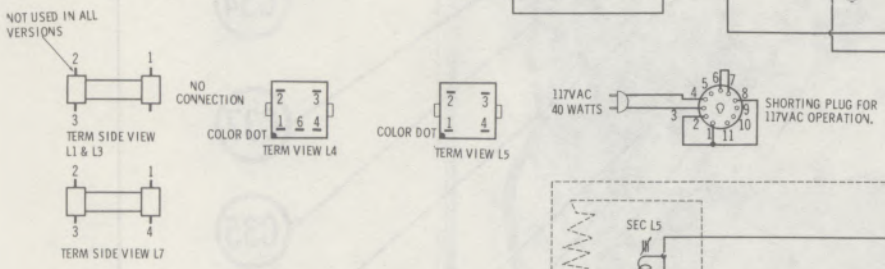

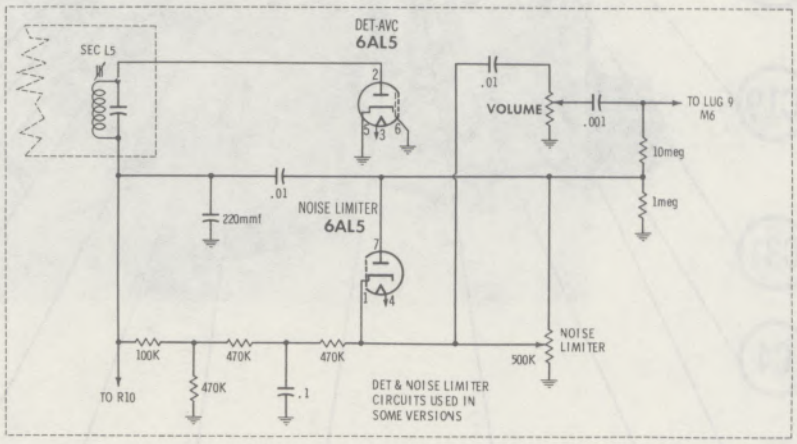

1. DC voltage measurements taken with vacuum tube voltmeter; AC voltages measured with 1000 ohm per volt voltmeter.
2. Socket connections are shown as bottom views.
3. Measured values are from socket pin to common ground.
4. Line voltage maintained at 117 volts for voltage readings.
5. Nominal tolerance on component values makes possible a variation of ±15% in voltage and resistance readings.
6. Volume control at maximum, no signal applied for voltage measurements.

⊖ SEE PARTS LIST FOR ALTERNATE VALUE OR APPLICATION

DC COIL RESISTANCE VALUES UNDER ONE OHM NOT SHOWN ON SCHEMATIC DIAGRAM

ARROWS ON CONTROLS INDICATE CLOCKWISE ROTATION (CONTROL VIEWED FROM SHAFT END)

U.S.L. MODEL TR-800

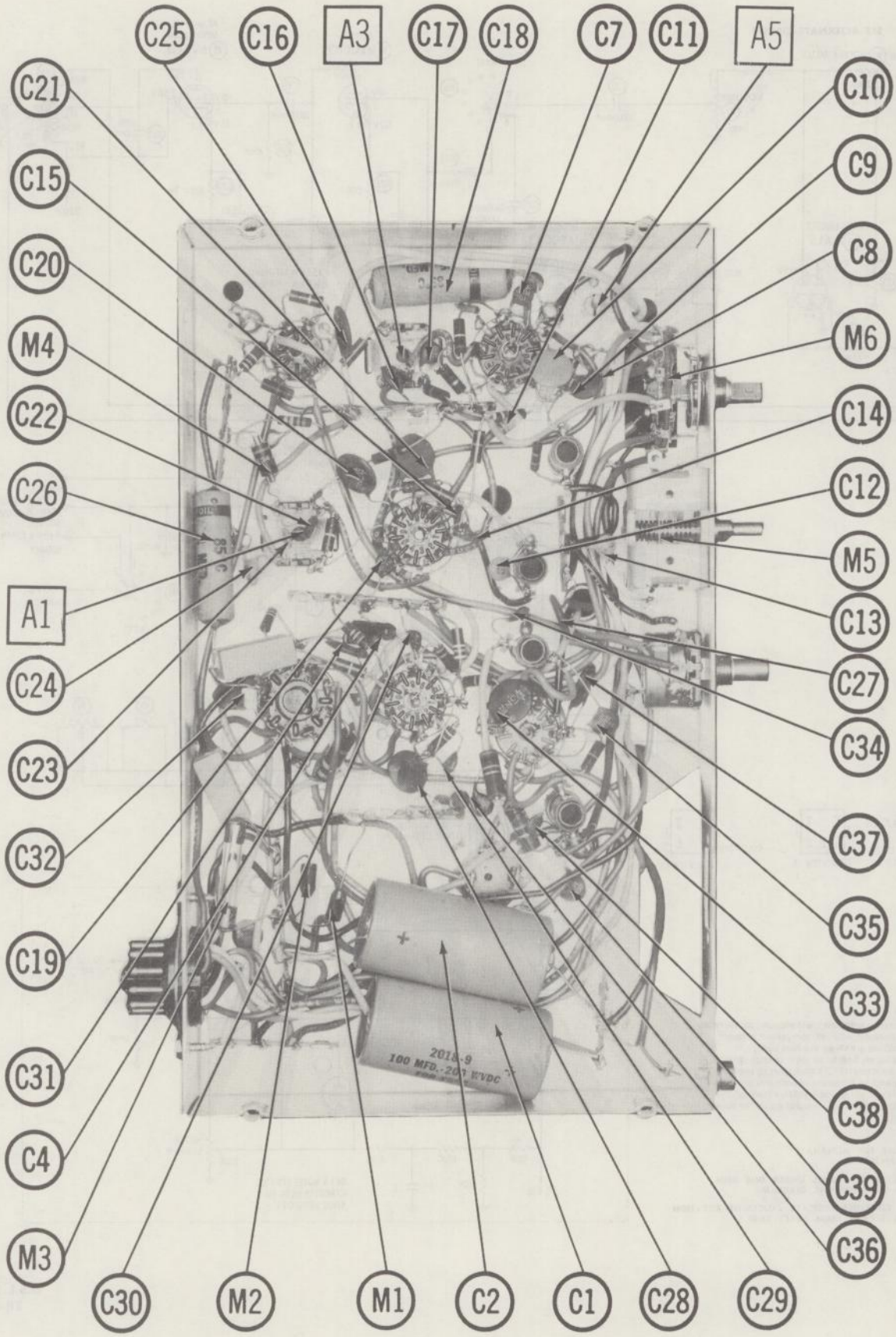

CHASSIS BOTTOM VIEW-ALIGNMENT, CAPACITOR & MISC. IDENT.

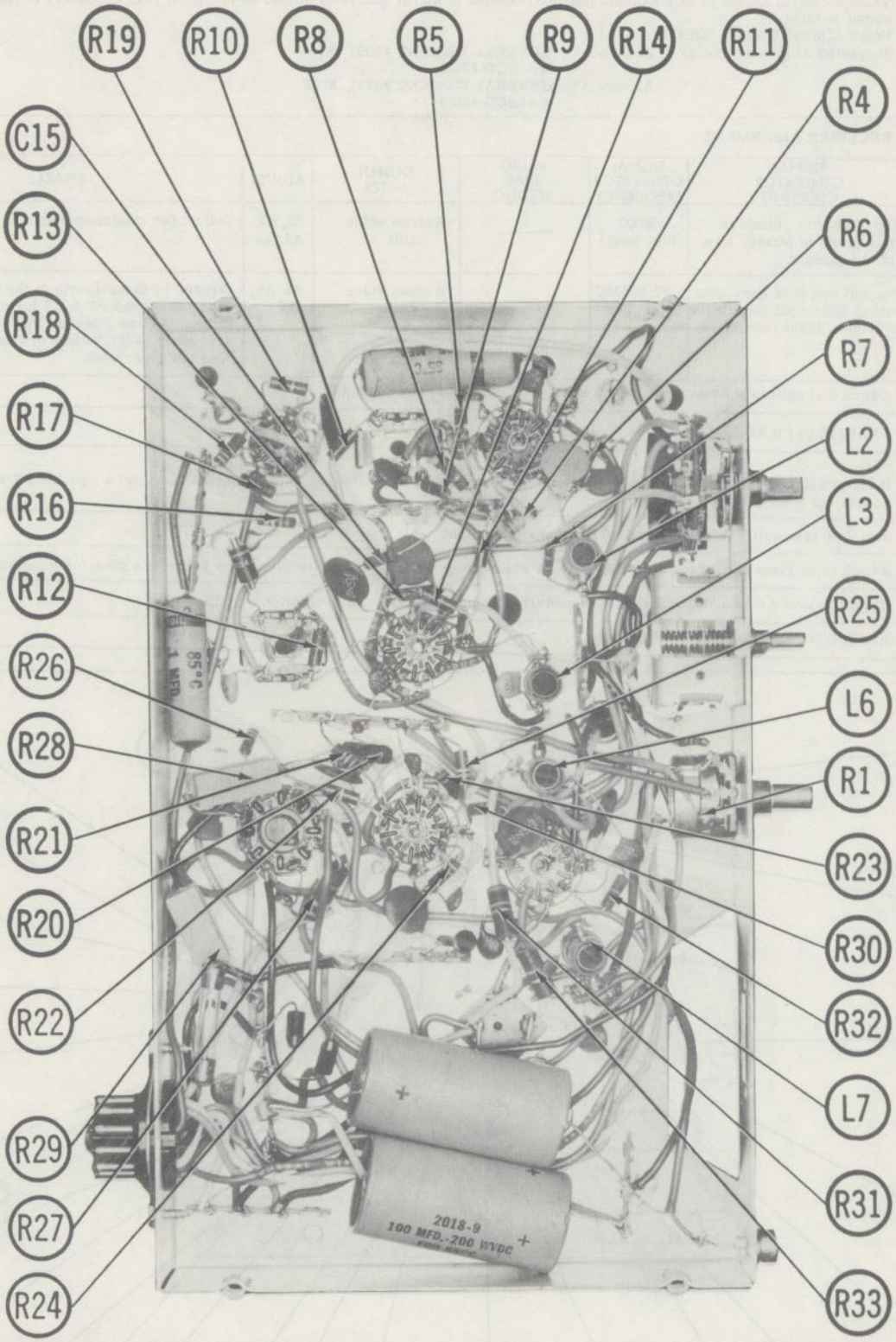

CHASSIS BOTTOM VIEW-RESISTOR & INDUCTOR IDENT.

ALIGNMENT INSTRUCTIONS

ALIGNMENT INSTRUCTIONS—READ CAREFULLY BEFORE ATTEMPTING ALIGNMENT
Volume control should be at maximum position. Output of signal generator should be no higher than necessary to obtain an output reading. Noise Limiter Control "OFF". Suggested Alignment Tools: A1 thru A4...GENERAL CEMENT #5097, 8727 WALSCO #2515 A5 thru A9...GENERAL CEMENT #8721, 8722 WALSCO #2519

RECEIVER ALIGNMENT

	SIGNAL GENERATOR COUPLING	SIGNAL GENERATOR FREQUENCY	RADIO DIAL SETTING	OUTPUT METER	ADJUST	REMARKS
1.	High side thru .01mfd to pin 9 (grid) of Mixer. Low side to chassis.	1750KC (400~ Mod.)	———	Across voice coil.	A1, A2, A3, A4	Adjust for maximum output.
2.	Connect output of generator having 52Ω output impedance to antenna input receptacle.	27.065MC	———	Across voice coil.	A5, A6, A7	Preset A7 three-fourth of the way out. Adjust A5, A6 & A7 for maximum output. A7 has 2 peaks. The image frequency is the bottom or lower peak. Use the upper peak.
3.	Check dial calibration on channels 1, 9 and 22. If necessary, retouch A7.					

TRANSMITTER ADJUSTMENT

	Insert a 52Ω non-inductior dummy load (minimum 3 watt dissipation) into the antenna socket. Connect a suitable RF meter across the load.
1.	Switch to transmit. Adjust A8 and A9 for maximum output.
2.	Switch from receive to transmit several times while slowly turning A8 counterclockwise ½ turn at a time for maximum output.
3.	Carefully turn A8 an additional 1½ turns counterclockwise for maximum oscillation stability.
4.	Readjust A9 for maximum output.

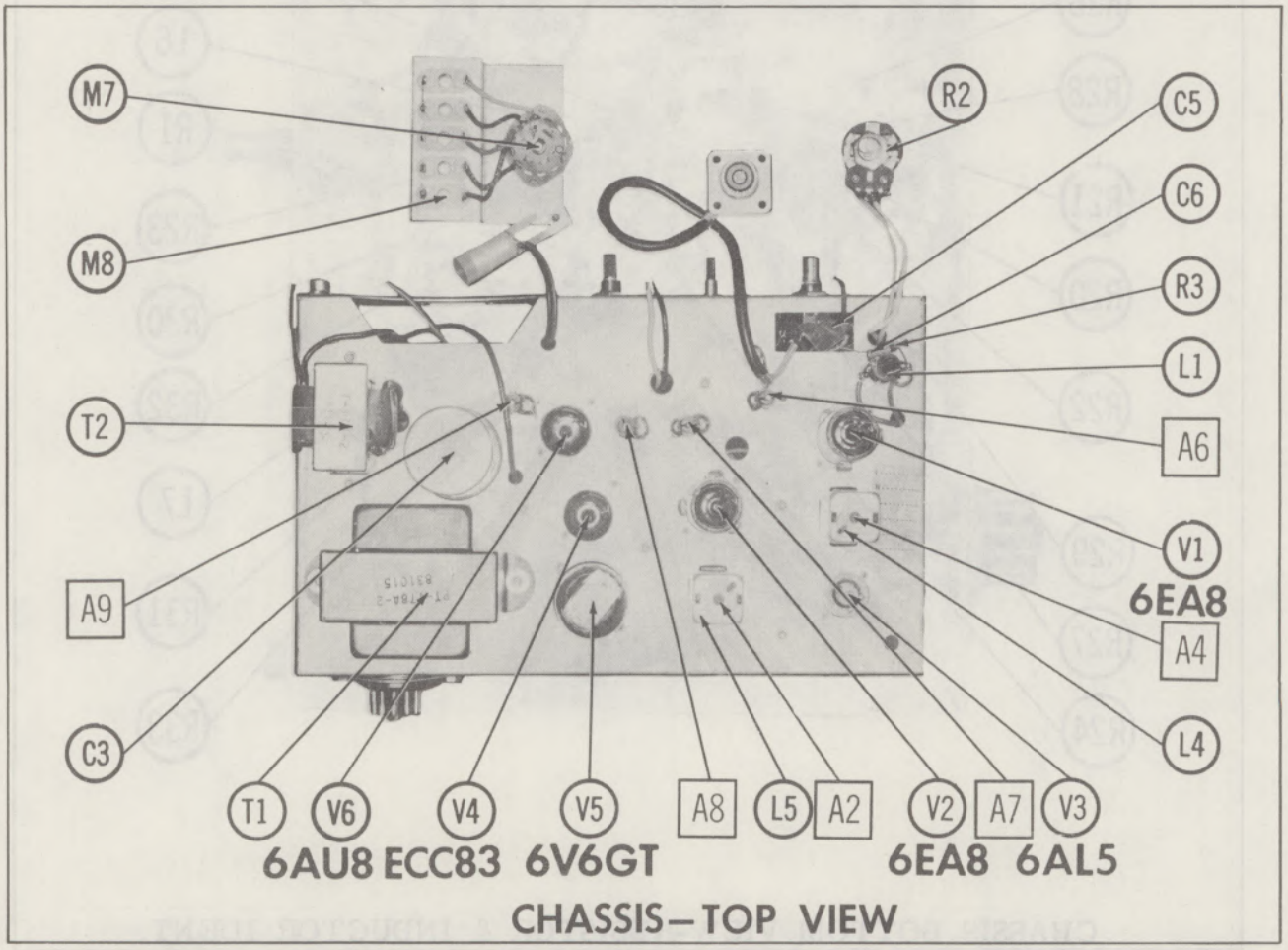

CHASSIS—TOP VIEW

PARTS LIST AND DESCRIPTIONS

TUBES

ITEM No.	USE	TYPE (GENERAL ELECTRIC / RAYTHEON / SYLVANIA)
V1	RF Amp.-Mixer	6EA8 (6U8A) *
V2	Rec. Osc.-IF Amp.	6EA8 (6U8A) *
V3	Noise Limiter	6AL5
V4	AF Amp.-Speech Amp.	ECC83/12AX7
V5	AF Output-Modulator	6V6GT
V6	Trans. Osc.-Final Amp.	6AU8

* Alternate

ELECTROLYTIC CAPACITORS

ITEM No.	RATING CAP.	RATING VOLT.	U.S.L. PART No.	AEROVOX PART No.	CORNELL-DUBILIER PART No.	MALLORY PART No.	PYRAMID PART No.	SPRAGUE PART No.	NOTES
C1	100	200		PRS1595	BR10035	TC1265	TD-100-200	TVAS-1445 *	
C2	100	200		PRS1595	BR10035	TC1265	TD-100-200	TVAS-1445*	
C3A	▲40	350		AFH3-111	C0870	FP367.5	TMT-3367	TVL-3754.5	
B	■40	350							
C	▲25	25							
C4	5	10		PTT-10005	NLW5-15	TT12X5	MLV5-12	TE-1127	

* Not normally in distributor's stock. Available thru distributor on order to manufacturer.

FIXED CAPACITORS

Capacity values given in the rating column are in mfd. for Paper Capacitors, and in mmfd. for Mica and Ceramic Capacitors.

ITEM No.	RATING	REMARKS	AEROVOX PART No.	CENTRALAB PART No.	CORNELL-DUBILIER PART No.	ELMENCO PART No.	MALLORY PART No.	SPRAGUE PART No.
C5	3 NPO 5%		NPO-SI 3.3	TCZ-3R3	C10V3C	CCTO-3R3	CNO-533	10TCC-V33
C6	10 N330 5%			TCA-10		*		10TCS-Q33
C7	1000		BPD-001	DD-102	BYA10D1	CCD-102	B-210	5HK-D10
C8	1000		BPD-001	DD-102	BYA10D1	CCD-102	B-210	5HK-D10
C9	22 NPO		NPO-DI 22	DTZ-22	C10Q22C	CCTO-220	CNO-422	10TCC-Q22
C10	100 N750		N750-DI 100	DTN-100	C10T1U	CCTN-101	CN7-310	10TCU-T10
C11	1.5 10%		NPO-SI 1.5	TCZ-1R5	C10V15C		CNO-510	10TCC-V15
C12	10 N220 10%					*		10TCR-Q10
C13	3.9 NPO ±.25mmf				C10V4C			10TCC-V39
C14	47 N750		N750-DI 47	DTN-47	C10Q47U	CCTN-470	CN7-447	10TCU-Q47
C15	1000		BPD-001	DD-102	BYA10D1	CCD-102	B-210	5HK-D10
C16	47 N750	Note 1	N750-DI 47	DTN-47	C10Q47U	CCTN-470	CN7-447	10TCU-Q47
C17	1000		BPD-001	DD-102	BYA10D1	CCD-102	B-210	5HK-D10
C18	.05 600V		P688N-05	DD-503	CUB6S5	6DP-3-503	GEM-615	6TM-S50
C19	1000		BPD-001	DD-102	BYA10D1	CCD-102	B-210	5HK-D10
C20	10000	Note 1	BPD-01	DD-103	BYA10S1	CCD-103	B-110	5HK-S10
C21	5000		BPD-005	DD-502	BYA10D5	CCD-502	B-250	5HK-D50
C22	10 NPO 10%	Note 1	NPO-DI 10	DTZ-10	C10Q1C	CCTO-100	CNO-410	10TCC-Q10
C23	10 N750		N750-DI 10	DTN-10	C10Q1U	CCTN-100	CN7-410	10TCU-Q10
C24	220 10%		DI-220	DD-221	L10T22	CCD-221	GP322	10TS-T22
C25	20000		BPD-01	DD-203	BYB6S2	CCD-203	B-120	5HK-S20
C26	.1 200V		P288N-1	DF-104	CUB2P1	2DP-3-104	GEM-201	2TM-P10
C27	10000		BPD-01	DD-103	BYA10S1	CCD-103	B-110	5HK-S10
C28	1000		BPD-001	DD-102	BYA10D1	CCD-102	B-210	5HK-D10
C29	1000		BPD-001	DD-102	BYA10D1	CCD-102	B-210	5HK-D10
C30	1000	(10000) †	BPD-001	DD-102	BYA10D1	CCD-102	B-210	5HK-D10
C31	10000		BPD-01	DD-103	BYA10S1	CCD-103	B-110	5HK-S10
C32	2000		BPD-002	DD-202	BYA10D2	CCD-202	B-220	5HK-D20
C33	10000		BPD-01	DD-103	BYA10S1	CCD-103	B-110	5HK-S10
C34	1000		BPD-001	DD-102	BYA10D1	CCD-102	B-210	5HK-D10
C35	22 NPO		NPO-DI 22	DTZ-22	C10Q22C	CCTO-220	CNO-422	10TCC-Q22
C36	1000		BPD-001	DD-102	BYA10D1	CCD-102	B-210	5HK-D10
C37	10000		BPD-01	DD-193	BYA10S1	CCD-103	B-110	5HK-S10
C38	10 NPO 10%		NPO-DI 10	DTZ-10	C10Q1C	CCTO-100	CNO-410	10TCC-Q10
C39	1000 1600V		DAC-001	DD30-102	HVB20D1	3CCD-102	2HV-210	BL-D10

* Not normally in distributor's stock. Available thru distributor on order to manufacturer.
† Alternate Value.
Note 1. Not used in some versions.

CONTROLS

ITEM No.	RATING RESISTANCE	RATING WATTS	U.S.L. PART No.	CENTRALAB PART No.	CLAROSTAT PART No.	CTS-IRC PART No.	MALLORY PART No.	INSTALLATION NOTES
R1A	1 meg	½	V-329-3	B-70-S	A47-1meg-Z	Q13-137	U-53	Volume (Note 1)
B	Shaft			Not Req.	FS-3	Not Req.	Not Req.	
C	Switch			Not Req.	SWE-20	76-2	US-27	Power Off-On
R2	10meg	½	V-330-1					Noise Limiter (Note 2)

Note 1. Some versions may use 2meg in this application.
Note 2. Some versions may use 500K in this application.

RESISTORS

All wattages 1/2 watt, or less, unless otherwise listed.

ITEM No.	RATING	IRC PART No.	WORKMAN TV PART No.	REMARKS
R3	5600Ω			
R4	4700Ω			
R5	100K			
R6	220Ω			
R7	5600Ω			Note 1
R8	1meg			
R9	10K			
R10	2.2meg			
R11	10K			
R12	120K			Note 1
R13	100Ω			
R14	22K			
R15	10K			
R16	680K			
R17	1meg			
R18	470K			
R19	1meg			
R20	270K			
R21	470K			
R22	220K			
R23	3300Ω			
R24	4.7meg			
R25	470K			
R26	470K			
R27	470Ω 1W			
R28	5000Ω 5W	PW5-5000	5W-SQ-5000	(3300Ω) *
R29	330Ω 5W	PW5-330	5W-SQ-330	
R30	47K			
R31	10K 1W			
R32	22K			
R33	22K 1W			

* Alternate Value.
Note 1. Not used in some versions.

COILS (RF-IF)

ITEM No.	USE	U.S.L. PART No.	Merit PART No.	Miller PART No.	Stancor PART No.	Workman TV PART No.	NOTES
L1	Ant.		TV-118	6171-A	RTC-8609	T216	* Remove Trap
L2	RF		TV-118	6171-A	RTC-8609	T216	
L3	Osc.						
L4	Input IF						
L5	Output IF						
L6	Transmitter Osc.		TV-118	6171-A	RTC-8609	T216	
L7	Transmitter Output		TV-141 *	6253 *	RTC-8571 *	T227 *	

TRANSFORMER (POWER)

ITEM No.	RATING PRI.	RATING SEC. 1	RATING SEC. 2	U.S.L. PART No.	Merit PART No.	Stancor PART No.	Thordarson PART No.	Triad PART No.	NOTES
T1	117V@ .38A	105V@ .200A (AC)	6.3V@ 2.2A	PT-178A-2					

PARTS LIST AND DESCRIPTIONS (Continued)

TRANSFORMER (AUDIO OUTPUT)

ITEM No.	IMPEDANCE		REPLACEMENT DATA					NOTES
	PRI.	SEC.	U. S. L. PART No.	Merit PART No.	Stancor PART No.	Thordarson PART No.	Triad PART No.	
T2	6500Ω Tap@ 4800Ω	3-4Ω	T-179-2					

SPEAKER

ITEM No.	TYPE			REPLACEMENT DATA		NOTES
	SIZE	FIELD	V. C. IMP.	U. S. L. PART No.	QUAM PART No.	
SP1	4"	PM	3-4Ω	7896144A (S7171)	4A1	

POWER RECTIFIERS

ITEM No.	RATING	REPLACEMENT DATA				NOTES
	CURRENT (Measured)	U. S. L. PART No.	RCA PART No.	SARKES TARZIAN PART No.	SYLVANIA PART No.	
M1	.065A		1N1763	40H	SR500	Silicon Type
M2	.065A		1N1763	40H	SR500	

FUSES

ITEM No.	TYPE	RATING	REPLACEMENT DATA					
			U. S. L. PART No.		LITTELFUSE PART No.		BUSS PART No.	
			FUSE	HOLDER	FUSE	HOLDER	FUSE	HOLDER
M3	3AG	3A 250V P/T	(Note 1)		318003 (3A 250V P/T)		GJV 3	

Note 1. Not used in some versions.

SIGNAL DIODES

ITEM No.	ORIG. TYPE	REPLACEMENT DATA				NOTES
		U. S. L. PART No.	GENERAL ELECTRIC PART No.	RAYTHEON PART No.	SYLVANIA PART No.	
M4	1N34A			1N34A	1N34A	AVC Diode (Pigtail)

MISCELLANEOUS

ITEM No.	PART NAME	U. S. L. PART No.	NOTES
M5	Tuning Cap.		
M6	Switch		Antenna, Transmit-Receive-Transmit, (Rotary Type)
M7	Switch		Crystal Selector (Rotary Type)
M8	Crystal		

WIRING DATA

General-use Unshielded Hook-up Wire ..... Use BELDEN No. 8530 (Solid) Available in Ten Colors
8524 (Stranded) Available in Ten Colors

Power Cord ..... Use BELDEN No. 1765-B (6 Ft. Length)
1725-K (7½ Ft. Length)

PHOTOFACT® Folder

VIKING MODELS 242-126, 242-127, 242-128, 242-129

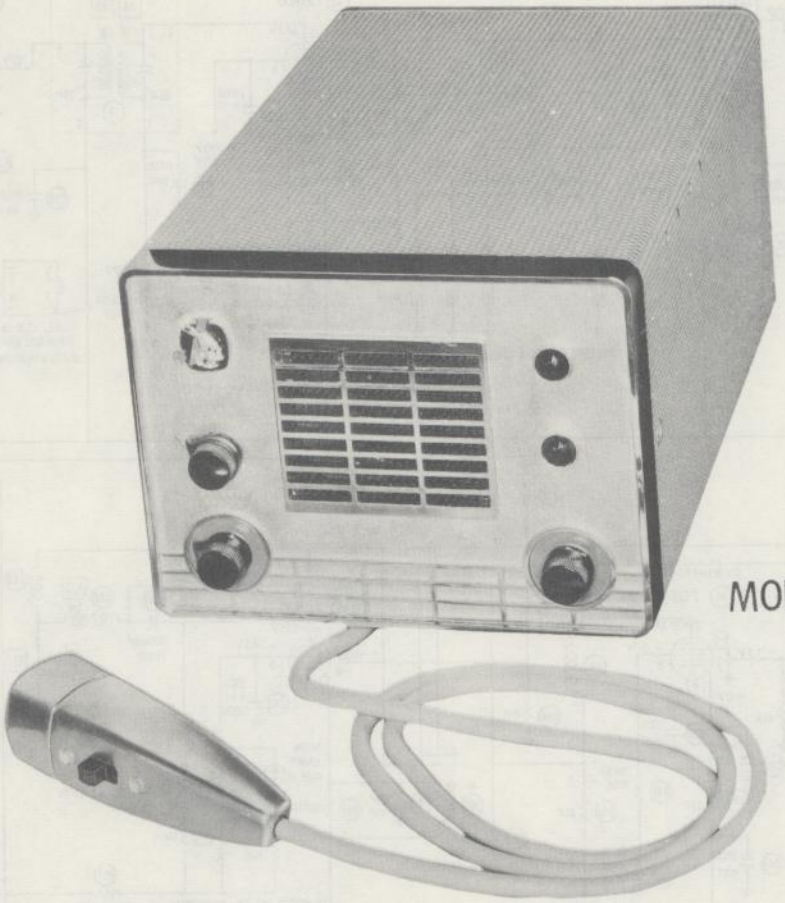

MODEL 242-128

VIKING MODELS 242-126, 242-127, 242-128, 242-129

TRADE NAME	Johnson Viking Models 242-126, 242-127, 242-128, 242-129
MANUFACTURER	E. F. Johnson Co., Waseca, Minnesota
TYPE SET	AC-Battery Operated 10 Tube Crystal Controlled Citizens Band Transmitter-Receiver
POWER SUPPLY	Model 242-126 : 110-120 Volts AC, 60 Cycles Model 242-127 : 110-120 Volts AC, 60 Cycles or 6 Volt Storage Battery Model 242-128 : 110-120 Volts AC, 60 Cycles or 12 Volt Storage Battery Model 242-129 : 110-120 Volts AC, 60 Cycles or 24 Volt Storage Battery
RATING	Model 242-128 : 61 Watts, .58 Amp. @117 Volts AC (Receive) 73 Watts, .68 Amp. @117 Volts AC (Transmit) 4.8 Amp. @12.6 Volts AC (Receive) 5.5 Amp. @12.6 Volts AC (Transmit)
FREQ. RANGE	Any 5 of Citizens Band Channels 1 thru 23

NOTICE

ONLY THOSE PERSONS PROPERLY LICENSED BY FCC ARE PERMITTED TO EFFECT REPAIRS OR MAKE CRYSTAL SUBSTITUTION ON THIS TYPE EQUIPMENT.

HOWARD W. SAMS & CO., INC. Indianapolis 6, Indiana

KZ386

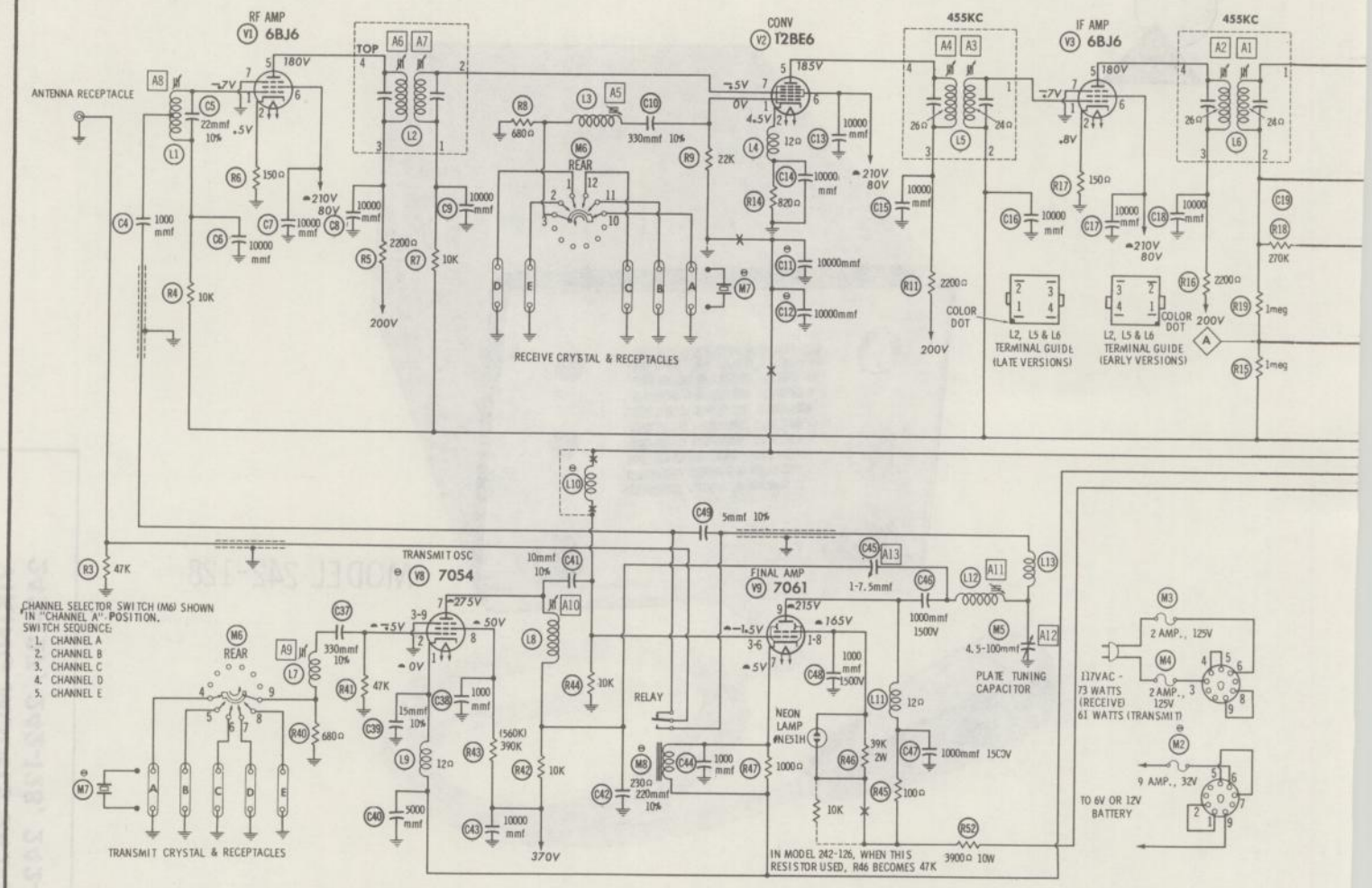

RESISTANCE READINGS

ITEM	TUBE	Pin 1	Pin 2	Pin 3	Pin 4	Pin 5	Pin 6	Pin 7	Pin 8	Pin 9
V1	6BJ6	3.3meg	150Ω	3Ω	0Ω	↑10K	↑34K	0Ω		
V2	12BE6	32K	820Ω	.1Ω	0Ω	↑10K	↑34K	3.3meg		
V3	6BJ6	3.3meg	150Ω	.1Ω	0Ω	↑10K	↑34K	0Ω		
V4	6AL5	3meg	1.3meg	.1Ω	.1Ω	0Ω	NC	1meg		
V5	ECC82 12AU7	↑460K	4.7meg	INF ☁0Ω	0Ω	0Ω	↑240K	2meg	0Ω	1Ω
V6	6AW8A	10K	525K	↑570K	.1Ω	.1Ω	0Ω	3.3meg	9000Ω	↑60K
V7	12AB5	↑8200Ω	TP	470K	0Ω	.1Ω	NC	330Ω	↑8200Ω	↑210Ω
V8	7054	☁12Ω	47K	0Ω	0Ω	.1Ω	NC	↑10K	↑390K	0Ω
V9	7061	NC	NC	10K	0Ω	.1Ω	NC	☁230Ω	↑43K	↑4200Ω
V10	12BW4	215Ω	NC	NC	.1Ω	0Ω	NC	205Ω	NC	¶

ALL MEASUREMENTS MADE IN "RECEIVER" POSITION UNLESS OTHERWISE DESIGNATED.
¶ THIS READING WILL VARY DEPENDING UPON THE CONDITION OF THE ELECTROLYTIC IN THE CIRCUIT.
☁ MEASURED IN "TRANSMIT" POSITION.
↑ MEASURED FROM PIN 9 OF V10.
NC NO CONNECTION
TP TIE POINT

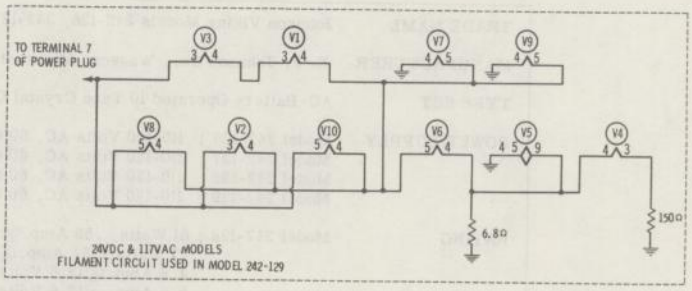

1. DC voltage measurements taken with vacuum tube voltmeter; AC voltages measured with 1000 ohm per volt voltmeter.
2. Socket connections are shown as bottom views.
3. Measured values are from socket pin to common ground.
4. Line voltage maintained at 117 volts for voltage readings.
5. Nominal tolerance on component values makes possible a variation of ±15% in voltage and resistance readings.
6. Volume control at maximum, no signal applied for voltage measurements.

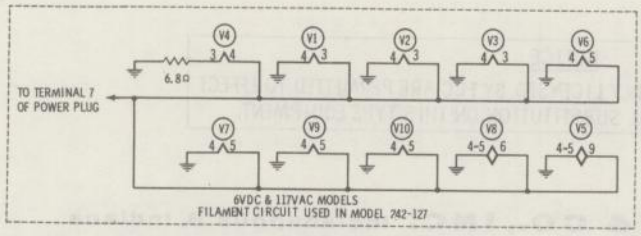

A PHOTOFACT STANDARD NOTATION SCHEMATIC

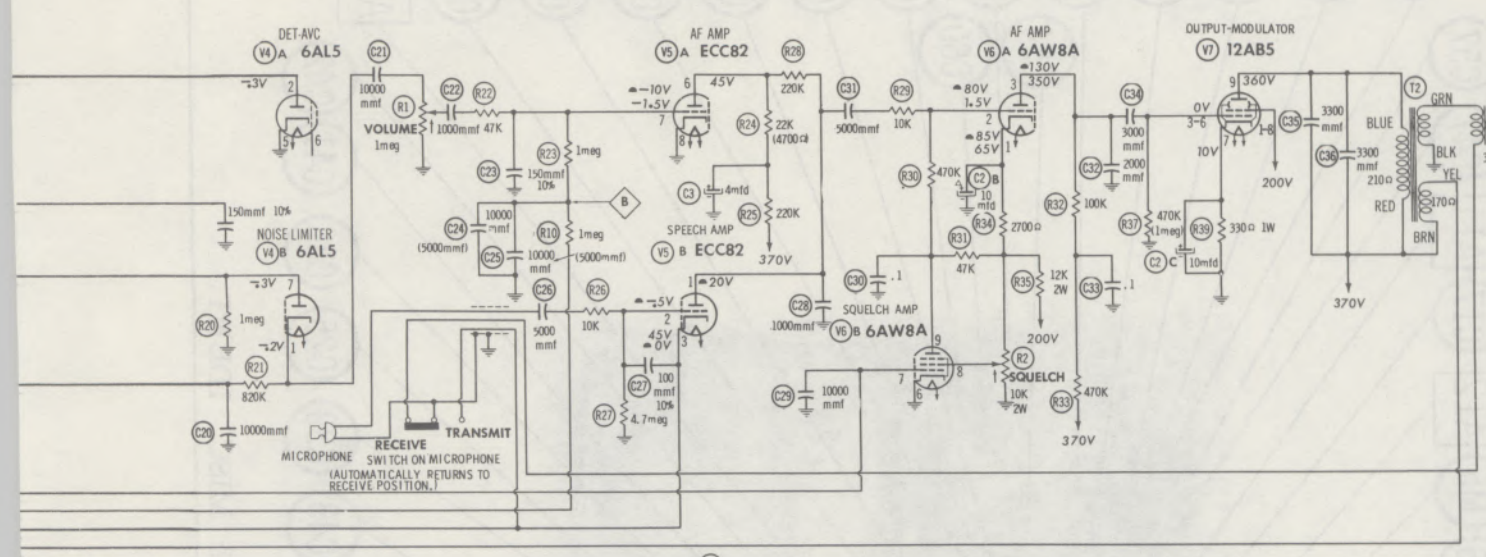

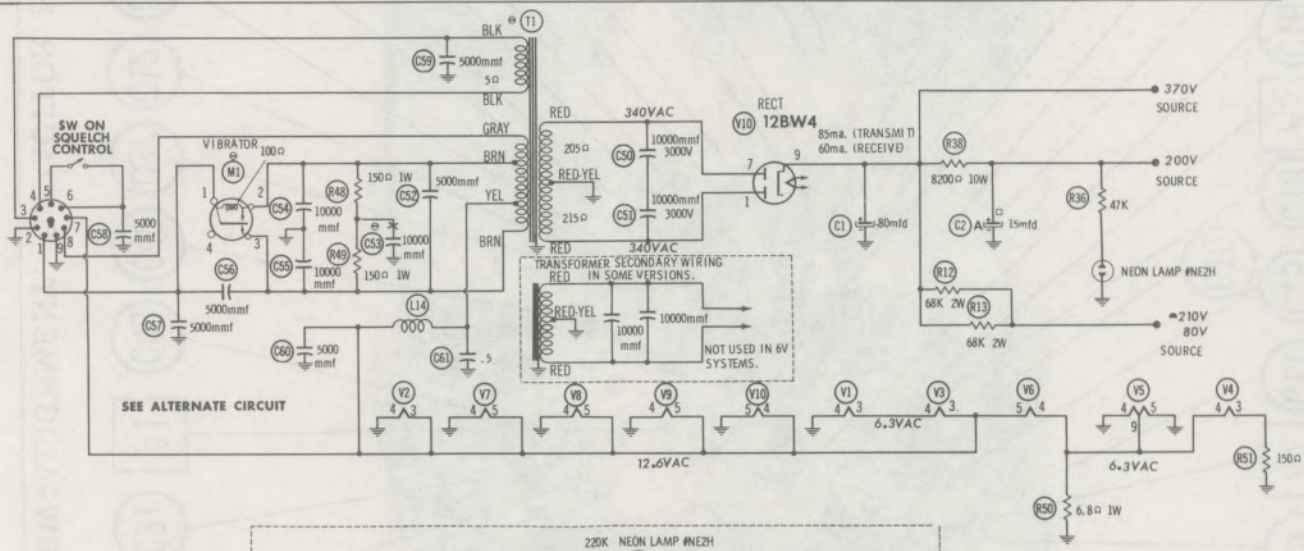

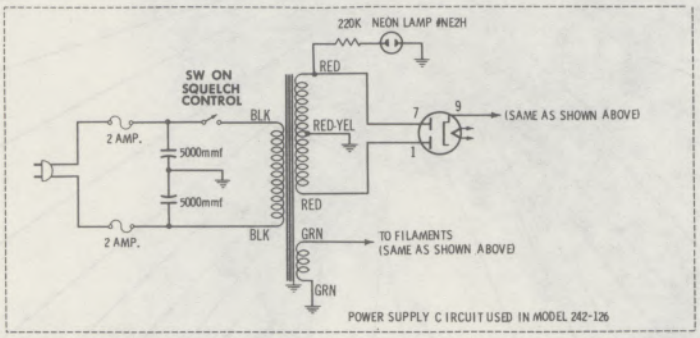

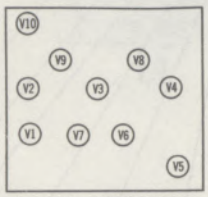

TUBE LAYOUT (BOTTOM VIEW)

NUMBERS ASSIGNED TO COILS, SWITCHES, PLUGS, SOCKETS, AND TRANSFORMERS ARE TO FACILITATE CIRCUIT TRACING OR COMPONENT REPLACEMENT AND MAY NOT NECESSARILY BE FOUND ON THE UNIT.

⊖ SEE PARTS LIST FOR ALTERNATE VALUE OR APPLICATION

DC COIL RESISTANCE VALUES UNDER ONE OHM NOT SHOWN ON SCHEMATIC DIAGRAM

ARROWS ON CONTROLS INDICATE CLOCKWISE ROTATION (CONTROL VIEWED FROM SHAFT END)

VIKING MODELS 242-126, 242-127, 242-128, 242-129

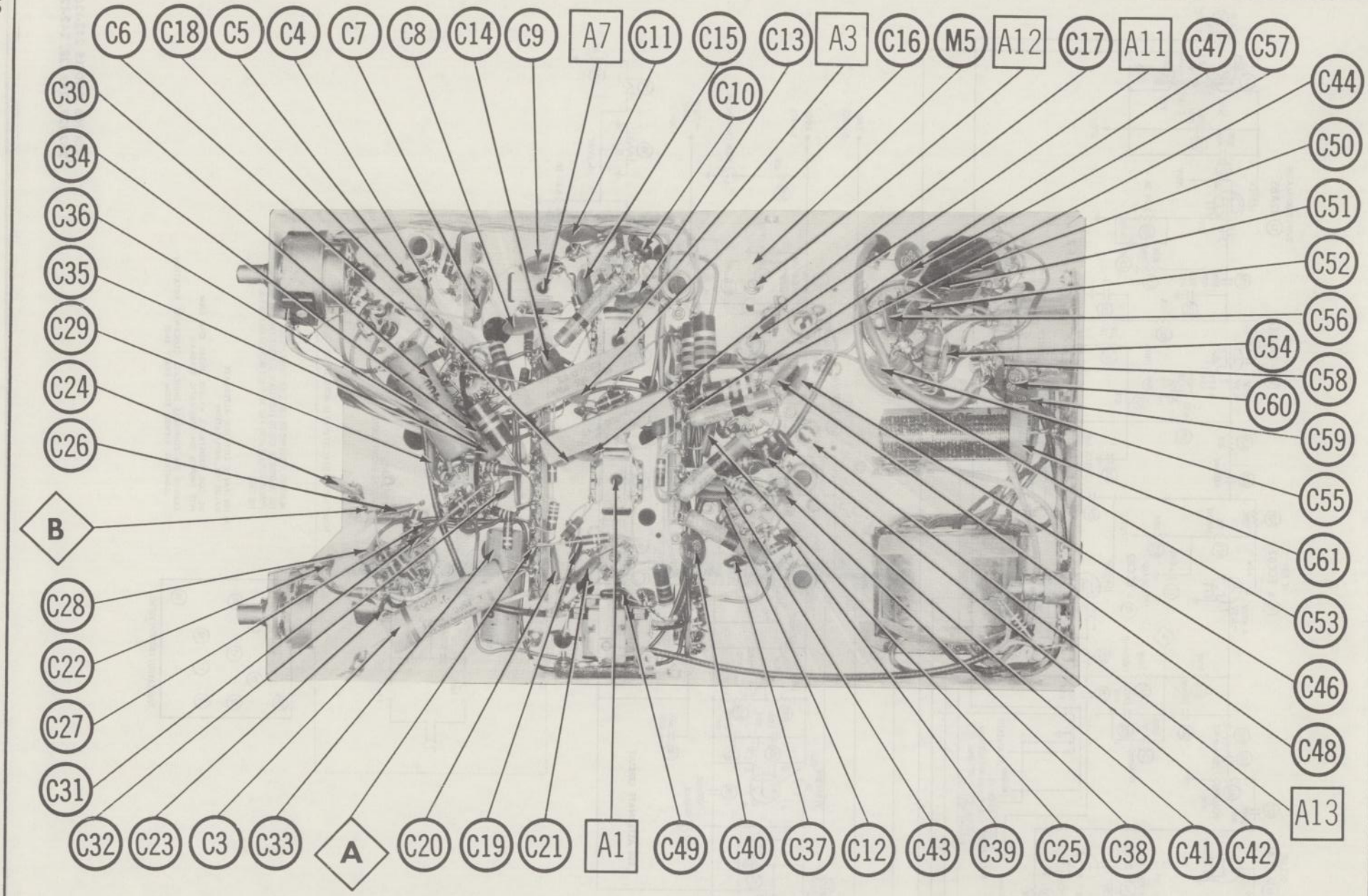

CHASSIS BOTTOM VIEW-ALIGNMENT, CAPACITOR & MISC. IDENT.

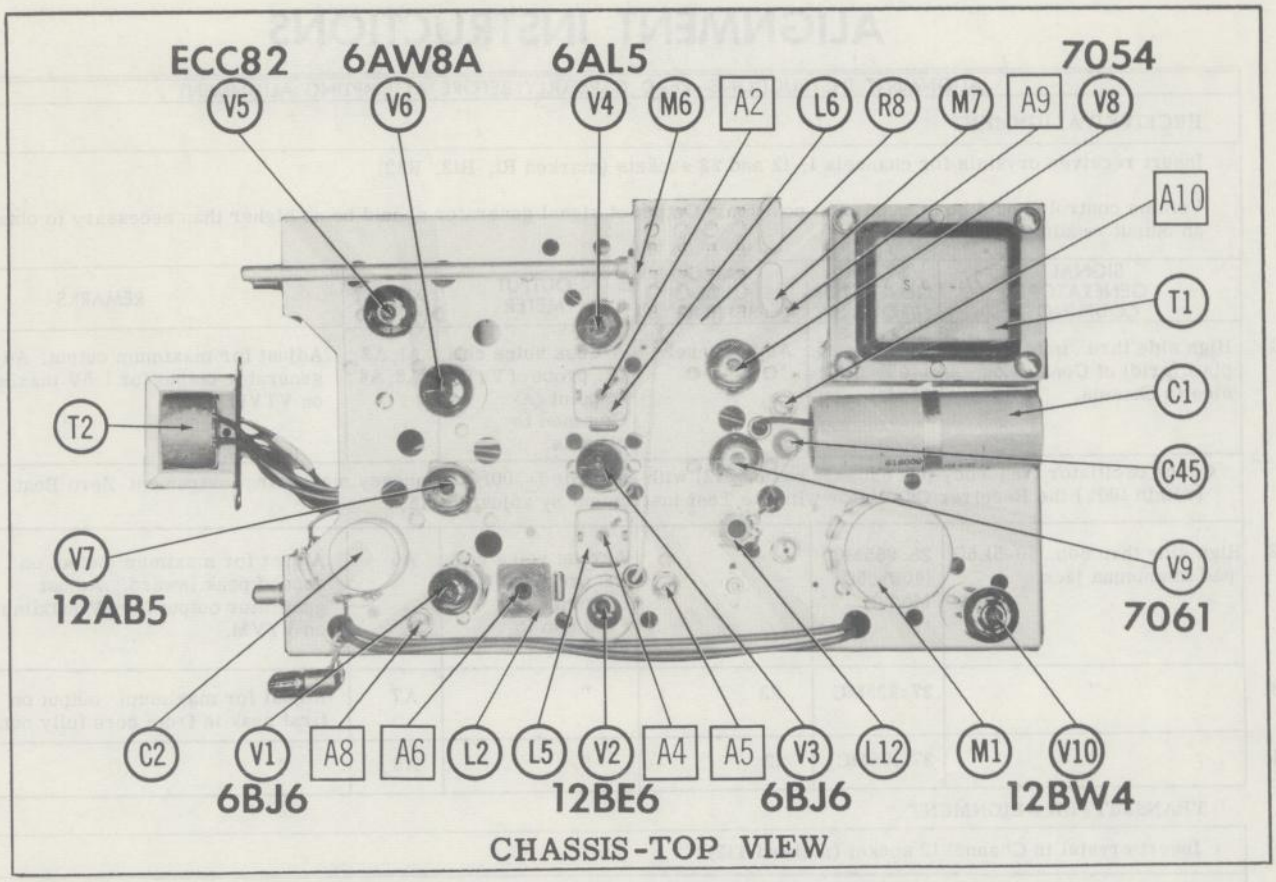

CHASSIS-TOP VIEW

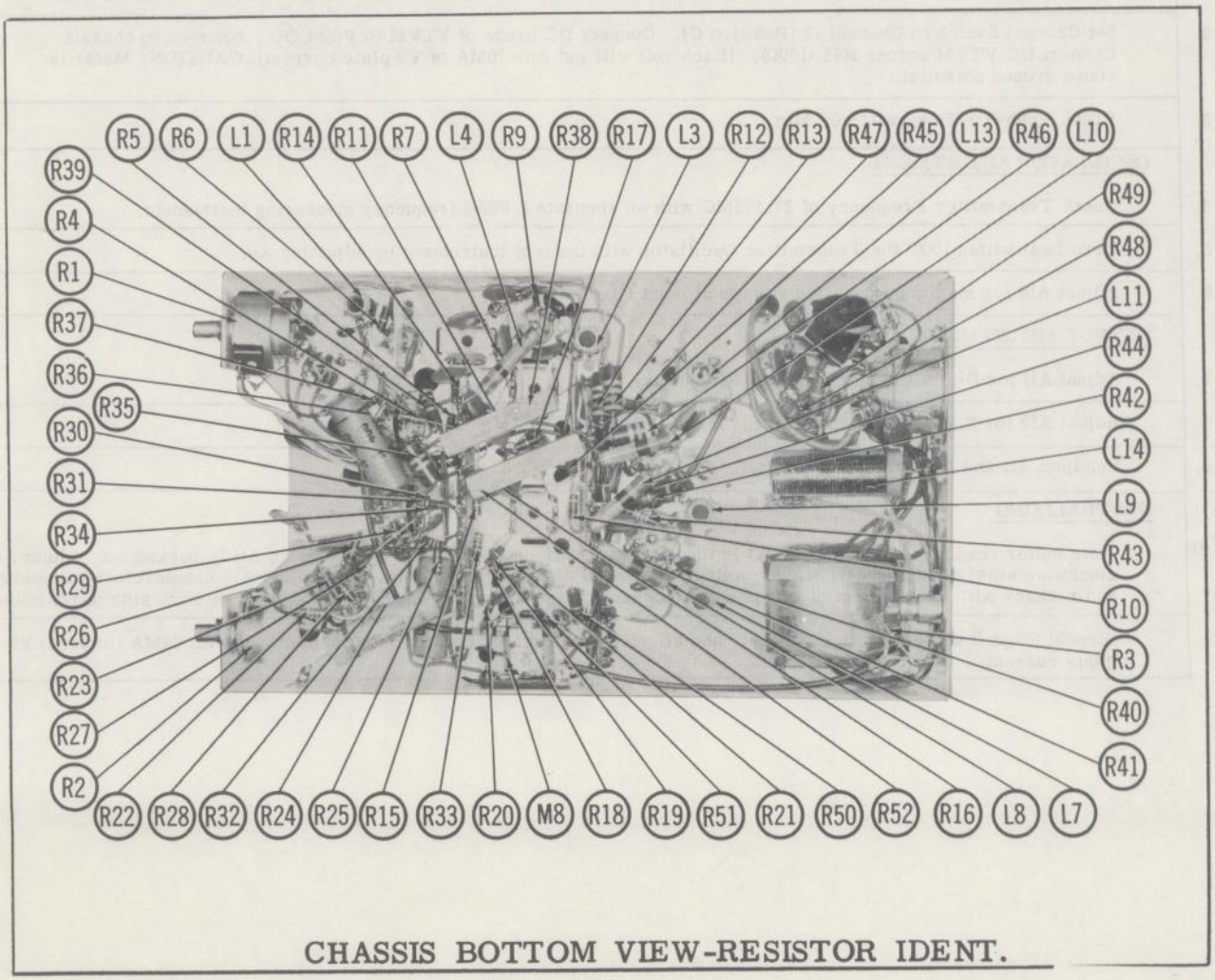

CHASSIS BOTTOM VIEW-RESISTOR IDENT.

ALIGNMENT INSTRUCTIONS

ALIGNMENT INSTRUCTIONS—READ CAREFULLY BEFORE ATTEMPTING ALIGNMENT

RECEIVER ALIGNMENT

Insert receiver crystals for channels 1, 12 and 22 sockets (marked R1, R12, R22)

Volume control should be at maximum position. Output of signal generator should be no higher than necessary to obtain an output reading.

	SIGNAL GENERATOR COUPLING	SIGNAL GENERATOR FREQUENCY	RADIO DIAL SETTING	OUTPUT METER	ADJUST	REMARKS
1.	High side thru .1mfd to pin 1 (grid) of Conv. Low side to chassis.	455KC ±.1% (400∿ 30% Mod.)	Any Channel	Across voice coil. DC probe of VTVM to point Ⓐ. Common to chassis.	A1, A2, A3, A4	Adjust for maximum output. Adjust generator output for 1.5V maximum on VTVM.
	Check oscillator frequency (26.650MC, channel 12) with accurate (±.001%) frequency measuring instrument-Zero Beat (within 100∿) the Receiver Oscillator with the Test instrument by adjusting A5.					
2.	High side thru 6db, 50-51.5Ω pad to antenna jack.	26.965MC (400∿ 30% Mod.)	1	Across voice coil DC probe of VTVM to point Ⓐ. Common to chassis.	A6	Adjust for maximum output on second peak inward. Adjust generator output for 2V maximum on VTVM.
3.	"	27.225MC	22	"	A7	Adjust for maximum output on first peak in from core fully out.
4.	"	27.105MC	12	"	A8	"

TRANSMITTER ALIGNMENT

Insert crystal in Channel 12 socket (marked T12).

1. Connect a 50-51.5Ω non-inductive dummy load in series with a 0-500MA RF milliammeter to the Antenna Jack.

2. Set Channel Switch to Channel 12 (Position C). Connect DC probe of VTVM to Point Ⓑ, common to chassis. Connect DC VTVM across R45 (100Ω). (Each volt will indicate 10MA of V9 plate current). CAUTION: Meter is above ground potential.

3. Press Push-To-Talk switch on Mic.

OSCILLATOR ADJUSTMENT

4. Check Transmitter Frequency of 27.105MC with an accurate (.001%) frequency measuring instrument.

5. Zero Beat within 100∿ the Transmitter Oscillator with the test instrument by adjusting A9.

6. Adjust A10 for maximum negative voltage at point Ⓑ.

OUTPUT ADJUSTMENT

7. Adjust A11 for Dip in V9 plate current (Resonance).

8. Adjust A12 for 2.4V (24MA) (or less for maximum output).

9. Readjust A11 and A12, adjusting A11 last.

NEUTRALIZING

10. Note meter reading at point Ⓑ as A11 is tuned thru resonance. If voltage increases as A11 is backed out, adjust A13 clockwise slowly and recheck A11. If voltage increases as A11 is turned into coil, adjust A13 counterclockwise slowly and recheck A11. Adjustment of A13 is correct when voltage increases equally or not at all on each side of resonance.

11. Repeat Steps 7 and 8 adjusting A11 last, and slightly counterclockwise for maximum output with 24MA (or less) V9 plate current.

PARTS LIST AND DESCRIPTIONS

TUBES

ITEM No.	USE	TYPE	ITEM No.	USE	TYPE
	◆ GENERAL ELECTRIC ◆			RAYTHEON ◆ SYLVANIA ◆	
V1	RF Amplifier	6BJ6	V6	AF Amp. -Squelch Amp.	6AW8A
V2	Converter	12BE6	V7	Output-Modulator	12AB5
V3	IF Amplifier	6BJ6	V8	Trans. Oscillator	7054 (12BY7A) *
V4	Det. -AVC-Noise Limiter	6AL5	V9	Final Amplifier	7061
V5	AF Amp. -Speech Amp.	ECC82/12AU7	V10	Rectifier	12BW4

* Used in Models 242-127

ELECTROLYTIC CAPACITORS

ITEM No.	RATING CAP.	RATING VOLT.	JOHNSON PART No.	AEROVOX PART No.	CORNELL-DUBILIER PART No.	MALLORY PART No.	PYRAMID PART No.	SPRAGUE PART No.	NOTES
C1	80	450	22.1298-1	PRS1780	BR8045	TC80	TD-80-450	TVA-1716	
C2A	■15	300	22.1541	AFH3-22	C0760	FP328	TMT-3292	TVL-3580	
B	▲10	150							
C	10	25							
C3	4	350	22.1654	PRS1600	BR435	TC697	TD-4-450	TVA-1601	

FIXED CAPACITORS

Capacity values given in the rating column are in mfd. for Paper Capacitors, and in mmfd. for Mica and Ceramic Capacitors.

ITEM No.	RATING	REMARKS	AEROVOX PART No.	CENTRALAB PART No.	CORNELL-DUBILIER PART No.	ELMENCO PART No.	MALLORY PART No.	SPRAGUE PART No.
C4	1000		BPD-001	DD-102	BYA10D1	CCD-102	B-210	5HK-D10
C5	22 10%		1469-000022	TCZ-22	22R5Q22	CM-19B-220K	CNO-422	MS-422
C6	10000		BPD-01	DD-103	BYA10S1	CCD-103	B-110	5HK-S10
C7	10000		BPD-01	DD-103	BYA10S1	CCD-103	B-110	5HK-S10
C8	10000		BPD-01	DD-103	BYA10S1	CCD-103	B-110	5HK-S10
C9	10000		BPD-01	DD-103	BYA10S1	CCD-103	B-110	5HK-S10
C10	330 10%		1469-00033		5R5T33	CM-19B-331K	MCB241	MS-333
C11	10000	Note 1	BPD-01	DD-103	BYA10S1	CCD-103	B-110	5HK-S10
C12	10000	Note 1	BPD-01	DD-103	BYA10S1	CCD-103	B-110	5HK-S10
C13	10000		BPD-01	DD-103	BYA10S1	CCD-103	B-110	5HK-S10
C14	10000		BPD-01	DD-103	BYA10S1	CCD-103	B-110	5HK-S10
C15	10000		BPD-01	DD-103	BYA10S1	CCD-103	B-110	5HK-S10
C16	10000		BPD-01	DD-103	BYA10S1	CCD-103	B-110	5HK-S10
C17	10000		BPD-01	DD-103	BYA10S1	CCD-103	B-110	5HK-S10
C18	10000		BPD-01	DD-103	BYA10S1	CCD-103	B-110	5HK-S10
C19	150 10%		1469-00015	TCZ-150	22R5T15	CM-19B-151K	MCB236	MS-315
C20	10000		BPD-01	DD-103	BYA10S1	CCD-103	B-110	5HK-S10
C21	10000		BPD-01	DD-103	BYA10S1	CCD-103	B-110	5HK-S10
C22	1000		BPD-001	DD-103	BYA10D1	CCD-102	B-210	5HK-D10
C23	150 10%		1469-00015	TCZ-150	22R5T15	CM-19B-151K	MCB236	MS-315
C24	10000	(5000) †	BPD-01	DD-103	BYA10S1	CCD-103	B-110	5HK-S10
C25	10000	(5000) †	BPD-01	DD-103	BYA10S1	CCD-103	B-110	5HK-S10
C26	5000		BPD-005	DD-502	BYA10D5	CCD-502	B-250	5HK-D50
C27	100 10%		1469-0001	TCZ-100	22R5T1	CM-19B-101K	MCB235	MS-31
C28	1000		BPD-001	DD-102	BYA10D1	CCD-102	B-210	5HK-D10
C29	10000		BPD-01	DD-103	BYA10S1	CCD-103	B-110	5HK-S10
C30	.1 400V		P488N-1	DF-104	CUB4P1	4DP-3-104	GEM-401	4TM-P10
C31	5000		BPD-005	DD-502	BYA10D5	CCD-502	B-250	5HK-D50
C32	2000		BPD-002	DD-202	BYA10D2	CCD-202	B-220	5HK-D20
C33	.1 400V		P488N-1	DF-104	CUB4P1	4DP-3-104	GEM-401	4TM-P10
C34	3000		DI-3000	DD-302	BYA10D3	CCD-302	B-230	10TS-D30
C35	3300		BPD-0033	DD-332	BYA10D33	CCD-332	B-233	5HK-D33
C36	3300		BPD-0033	DD-332	BYA10D33	CCD-332	B-233	5HK-D33
C37	330 10%		1469-00033		5R5T33	CM-19B-331K	MCB241	MS-333
C38	1000		BPD-001	DD-102	BYA10D1	CCD-102	B-210	5HK-D10
C39	15 10%		1469-000015	TCZ-15	22R5Q15	CM-19B-150K	CNO-415	MS-415
C40	5000		BPD-005	DD-502	BYA10D5	CCD-502	B-250	5HK-D50
C41	10 10%		1469-00010	TCZ-10	22R5Q1	CM-19B-100K	MCB275	MS-41
C42	220 10%		1469-00022	TCZ-220	22R5Q22	CM-19B-221K	CNO-322	MS-322
C43	10000		BPD-01	DD-103	BYA10S1	CCD-103	B-110	5HK-S10
C44	1000		BPD-001	DD-102	BYA10D1	CCD-102	B-210	5HK-D10
C45	1-7.5	#22.1514		829-7				

FIXED CAPACITORS (cont)

ITEM No.	RATING	REMARKS	AEROVOX PART No.	CENTRALAB PART No.	CORNELL-DUBILIER PART No.	ELMENCO PART No.	MALLORY PART No.	SPRAGUE PART No.
C46	1000 1500V		HVD-15-1000	DD30-102	HVB20D1	3CCD-102	2HV-210	20GA-D1
C47	1000 1500V		HVD-15-1000	DD30-102	HVB20D1	3CCD-102	2HV-210	20GA-D1
C48	1000 1500V		HVD-15-1000	DD30-102	HVB20D1	3CCD-102	2HV-210	20GA-D1
C49	5 10%		1469-000005	TCZ-4R7	22R5V5	CM-19B-050K	MCB205	MS-55
C50	10000 3000V	Note 2					GEM-3011	30GA-S10
C51	10000 3000V						GEM-3011	30GA-S10
C52	5000		BPD-005	DD-502	BYA10D5	CCD-502	B-250	5HK-D50
C53	10000		BPD-01	DD-103	BYA10S1	CCD-103	B-110	5HK-S10
C54	10000		BPD-01	DD-103	BYA10S1	CCD-103	B-110	5HK-S10
C55	10000		BPD-01	DD-103	BYA10S1	CCD-103	B-110	5HK-S10
C56	5000		BPD-005	DD-502	BYA10D5	CCD-502	B-250	5HK-D50
C57	5000		BPD-005	DD-502	BYA10D5	CCD-502	B-250	5HK-D50
C58	5000		BPD-005	DD-502	BYA10D5	CCD-502	B-250	5HK-D50
C59	5000		BPD-005	DD-502	BYA10D5	CCD-502	B-250	5HK-D50
C60	5000		BPD-005	DD-502	BYA10D5	CCD-502	B-250	5HK-D50
C61	.5 400V		P488N-5		CUB4P5	4DP-6-504	GEM-405	4TM-P50

Note 1. Not used in some versions.
Note 2. Not used in 6 volt versions.
† Alternate Values.
# Viking Part Number.

CONTROLS

ITEM No.	RATING RESISTANCE	RATING WATTS	JOHNSON PART No.	CENTRALAB PART No.	CLAROSTAT PART No.	CTS-IRC PART No.	MALLORY PART No.	INSTALLATION NOTES
R1A	1meg	½	22.1647	B-70	A47-1meg-Z	Q13-137	U53	Volume
B	Shaft			Not Req.	RS-2	Not Req.	Not Req.	
R2A	10K	2(WW)	22.1648		A43S-10K	WP10000	R10ML	Squelch
B	Shaft				RS-2	Not Req.	DS-36	
C	Switch				Not Req.	76-11	US-30	Power Off-On

RESISTORS

All wattages 1/2 watt, or less, unless otherwise listed.

ITEM No.	RATING	IRC PART No.	WORKMAN TV PART No.	REMARKS
R3	47K			
R4	10K			
R5	2200Ω			
R6	150Ω			
R7	10K			
R8	680Ω			
R9	22K			
R10	1meg			
R11	2200Ω			
R12	68K 2W			
R13	68K 2W			
R14	820Ω			
R15	1meg			
R16	2200Ω			
R17	150Ω			
R18	270Ω			
R19	1meg			
R20	1meg			
R21	820K			
R22	47K			
R23	1meg			
R24	22K			(4700Ω) *
R25	220K			
R26	10K			
R27	4.7meg			

* Alternate Value.

ITEM No.	RATING	IRC PART No.	WORKMAN TV PART No.	REMARKS
R28	220K			
R29	10K			
R30	470K			
R31	47K			
R32	100K			
R33	470K			
R34	2700Ω			
R35	12K 2W			
R36	47K			
R37	470K			(1meg) *
R38	8200Ω 10W	PW10-8200	10W-SQ-8200	
R39	330Ω 1W			
R40	680Ω			
R41	47K			
R42	10K			
R43	390K			(560K) *
R44	10K			
R45	100Ω			
R46	39K 2W			
R47	1000Ω			
R48	150Ω 1W			
R49	150Ω 1W			
R50	6.8Ω 1W			
R51	150Ω			
R52	3900Ω 10W	PW10-3900	10W-SQ-3900	

PARTS LIST AND DESCRIPTIONS (Continued)

COILS (RF-IF)

ITEM No.	USE	REPLACEMENT DATA: JOHNSON PART No.	Merit PART No.	Miller PART No.	Stancor PART No.	NOTES
L1	Ant.	23.1175-21				① IRC Part #CL-1
L2	RF	22.1623				
L3	Osc. Grid	23.1175-15	TV-118	6171-A	RTC-8609	
L4	RF Choke(20uh)	22.1549 ①	TV-192	6152	RTC-8584	② Not used in some versions.
L5	Input IF	22.1556	BC-352	12-C1	RTC-8632	
L6	Output IF	22.1557	BC-353	12-C2	RTC-8633	
L7	Osc. Grid	23.1175-17	TV-118	6171-A	RTC-8609	
L8	RF Choke(20uh)	22.1549 ①	TV-192	6152	RTC-8584	
L9	Osc. Plate	23.1175-17	TV-118	6171-A	RTC-8609	
L10	RF Choke(20 uh)	22.1549 ① ②	TV-192	6152	RTC-8584	
L11	RF Choke (20uh)	22.1549 ①	TV-192	6152	RTC-8584	
L12	Final Plate	23.1175-24				
L13	Ant.	23.1175-23	TV-118	6171-A	RTC-8609	
L14	Hash Choke (4uh)	16.1456		5219	RTC-9181	

TRANSFORMER (POWER)

ITEM No.	RATING: PRI. 1	PRI. 2	SEC. 1	REPLACEMENT DATA: JOHNSON PART No.	Merit PART No.	Stancor PART No.	Thordarson PART No.	Triad PART No.	NOTES
T1	117V * ⓐ .68A (AC Only)	18V(6Vtap Not Used) Tap ⓐ 12.6 VCT ⓐ 3A	680VCT ⓐ .085A	22.1560 ①					①Part #22.1620 used in 6V operation. * Not used on DC operation.
	SEC. 2	SEC. 3	SEC. 4						
	12.6VCT ⓐ 2.6A (117V Operation)								

TRANSFORMER (AUDIO OUTPUT)

ITEM No.	IMPEDANCE: PRI. 1	SEC.	REPLACEMENT DATA: JOHNSON PART No.	Merit PART No.	Stancor PART No.	Thordarson PART No.	Triad PART No.	NOTES
T2	4200Ω	3-4Ω	22.1616					
	PRI. 2							
	4200Ω							

SPEAKER

ITEM No.	TYPE: SIZE	FIELD	V. C. IMP.	REPLACEMENT DATA: JOHNSON PART No.	QUAM PART No.	NOTES
SP1	3½"	PM	3-4Ω	22-1612*	3A070T	* Alternate Part #22.1612-2

VIBRATOR

ITEM No.	TYPE	INPUT VOLTS	FRE-QUENCY	REPLACEMENT DATA: JOHNSON PART No.	CORNELL-DUBILIER PART No.	MALLORY PART No.	RADIART PART No.	NOTES
M1	Interrupter	12.6	115~	22-1570-1 *	6301 *	G1601 *	6301 *	* 12 Volt
	Interrupter	6	115~	22-1570-2 ♦	5301 ♦	1601 ♦	5301 ♦	♦ 6 Volt

FUSES

ITEM No.	TYPE	RATING	REPLACEMENT DATA: JOHNSON PART No. FUSE	JOHNSON HOLDER	LITTELFUSE PART No. FUSE	LITTELFUSE HOLDER	BUSS PART No. FUSE	BUSS HOLDER
M2	SFE	9A 32V	22.1590-4①		307009 (SFE 9A 32V)	155009	SFE 9	HHH
	SFE	4A 32V	22.1590-1②		307004 (SFE 4A 32V)	155004	SFE 4	HRF
	SFE	20A 32V	22.1590-6 ③		311020 (SFE 20A 32V)	155020	SFE 20	HHJ
M3	3AG	2A 125V	22.1257 ④		312002 (3AG 2A 125V)		AGC 2	
M4	3AG	2A 125V	22.1257 ④		312002 (3AG 2A 125V)		AGC 2	

① 12 Volt Operation. ② 24 Volt Operation. ③ 6 Volt Operation. ④ AC Operation.

MISCELLANEOUS

ITEM No.	PART NAME	JOHNSON PART No.	NOTES
M5	Variable Cap.	148-6-3	(4.5-100mmf)
M6	Switch	22.1615	Channel Selector (Rotary Wafer Type)
M7	Crystal	250-901	Channel 1 (Matched Pair, Receive-Transmit)
	Crystal	250-902	Channel 2 (Matched Pair, Receive-Transmit)
	Crystal	250-903	Channel 3 (Matched Pair, Receive-Transmit)
	Crystal	250-904	Channel 4 (Matched Pair, Receive-Transmit)
	Crystal	250-905	Channel 5 (Matched Pair, Receive-Transmit)
	Crystal	250-906	Channel 6 (Matched Pair, Receive-Transmit)
	Crystal	250-907	Channel 7 (Matched Pair, Receive-Transmit)
	Crystal	250-908	Channel 8 (Matched Pair, Receive-Transmit)
	Crystal	250-909	Channel 9 (Matched Pair, Receive-Transmit)
	Crystal	250-910	Channel 10 (Matched Pair, Receive-Transmit)
	Crystal	250-911	Channel 11 (Matched Pair, Receive-Transmit)
	Crystal	250-912	Channel 12 (Matched Pair, Receive-Transmit)
	Crystal	250-913	Channel 13 (Matched Pair, Receive-Transmit)
	Crystal	250-914	Channel 14 (Matched Pair, Receive-Transmit)
	Crystal	250-915	Channel 15 (Matched Pair, Receive-Transmit)
	Crystal	250-916	Channel 16 (Matched Pair, Receive-Transmit)
	Crystal	250-917	Channel 17 (Matched Pair, Receive-Transmit)
	Crystal	250-918	Channel 18 (Matched Pair, Receive-Transmit)
	Crystal	250-919	Channel 19 (Matched Pair, Receive-Transmit)
	Crystal	250-920	Channel 20 (Matched Pair, Receive-Transmit)
	Crystal	250-921	Channel 21 (Matched Pair, Receive-Transmit)
	Crystal	250-922	Channel 22 (Matched Pair, Receive-Transmit)
	Crystal	250-923	Channel 23 (Matched Pair, Receive-Transmit)
M8	Relay	22-1656 *	Antenna Switching (SPDT, 290Ω Coil)
	Microphone	22-1627-2	

* Early versions used a 2300Ω relay, replace with Part #22-1656.

CABINETS & CABINET PARTS

(When Ordering Cabinets & Cabinet Parts, Specify Model, Chassis & Color)

NAME	PART NO.	DESCRIPTION
Knob	22.920	
Cabinet	23.1380-2	

WIRING DATA

General-use Unshielded Hook-up Wire ..... Use BELDEN No. 8530 (Solid) Available in Ten Colors
8524 (Stranded) Available in Ten Colors

Power Cord ..... Use BELDEN No. 1765-B (6 Ft. Length)
1725-K (7½ Ft. Length)

PHOTOFACT® Folder

VOCALINE MODELS ED-27-6, ED-27-12, ED-27M-6, ED-27M-12

MODEL ED-27M-12

TRADE NAME	Vocaline Models ED-27-6, ED-27-12, ED-27M-6, ED-27M-12 (Commaire)
MANUFACTURER	Vocaline Company of America, Inc., Old Saybrook, Connecticut
TYPE SET	AC-Battery Operated Crystal Controlled 10 Tube Citizens Band Transmitter-Receiver
POWER SUPPLY	110-120 Volts AC, 60 Cycles (or) 12 Volt Storage Battery (-12 Versions) 110-120 Volts AC, 60 Cycles (or) 6 Volt Storage Battery (-6 Versions)
RATING	48 Watts, .5 Amp. @117 Volts AC (Receive) ; 58 Watts, .58 Amp. @117 Volts AC (Transmit) 7.4 Amp@6.3 Volts DC (Receive); 8.2 Amp@6.3Volts DC (Transmit) 4.3 Amp@12.6 Volts DC (Receive-Transmit)
TUNING RANGE	Any 4 of Citizens Band Channels 1 thru 22.

VOCALINE MODELS ED-27-6, ED-27-12, ED-27M-6, ED-27M-12

NOTICE

ONLY THOSE PERSONS PROPERLY LICENSED BY FCC ARE PERMITTED TO MAKE CRYSTAL SUBSTITUTION OR EFFECT REPAIRS ON THE TRANSMITTER PORTION OF THIS UNIT.

HOWARD W. SAMS & CO., INC. Indianapolis 6, Indiana

KZ431

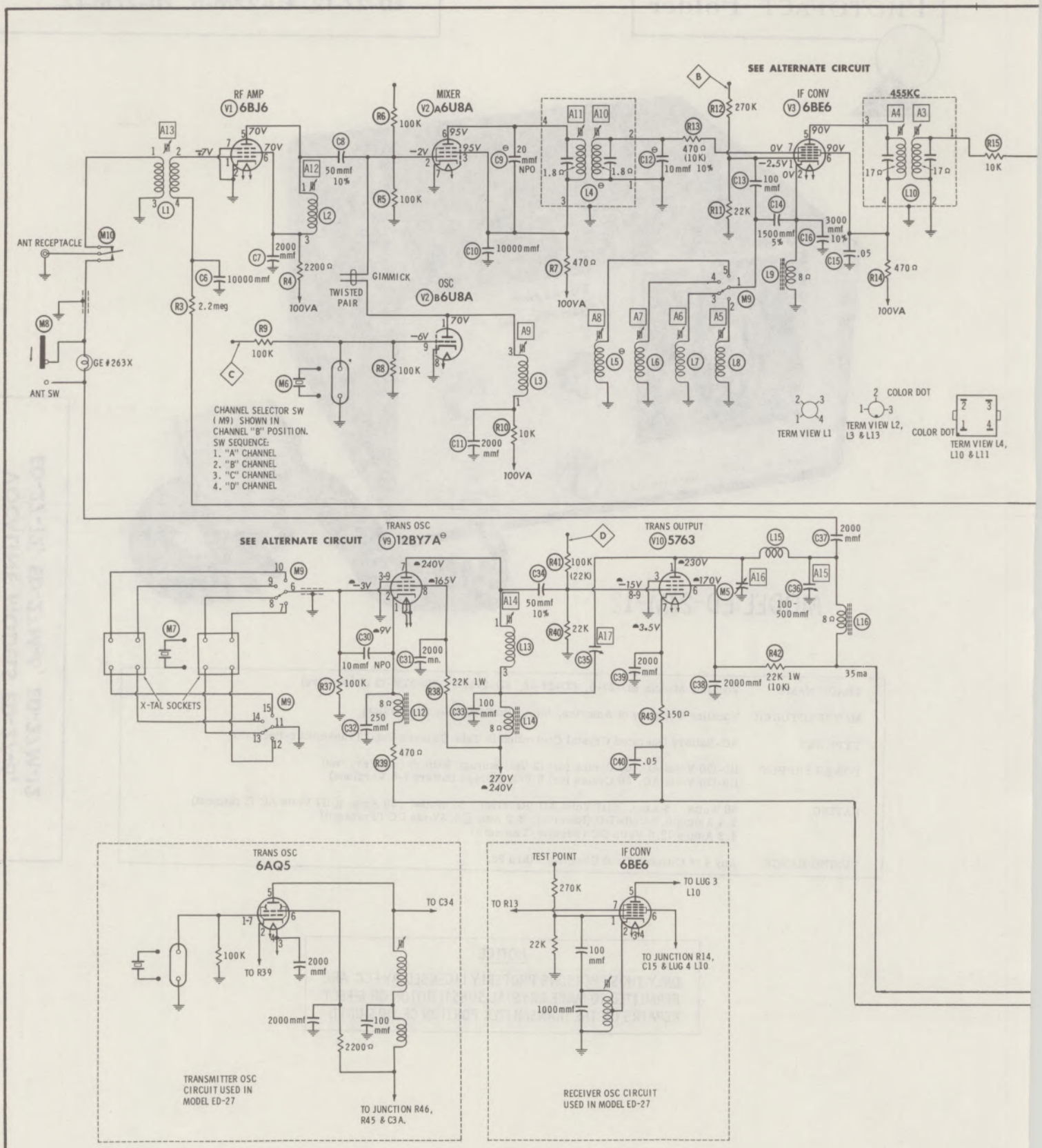

A PHOTOFACT STANDARD NOTATION SCHEMATIC

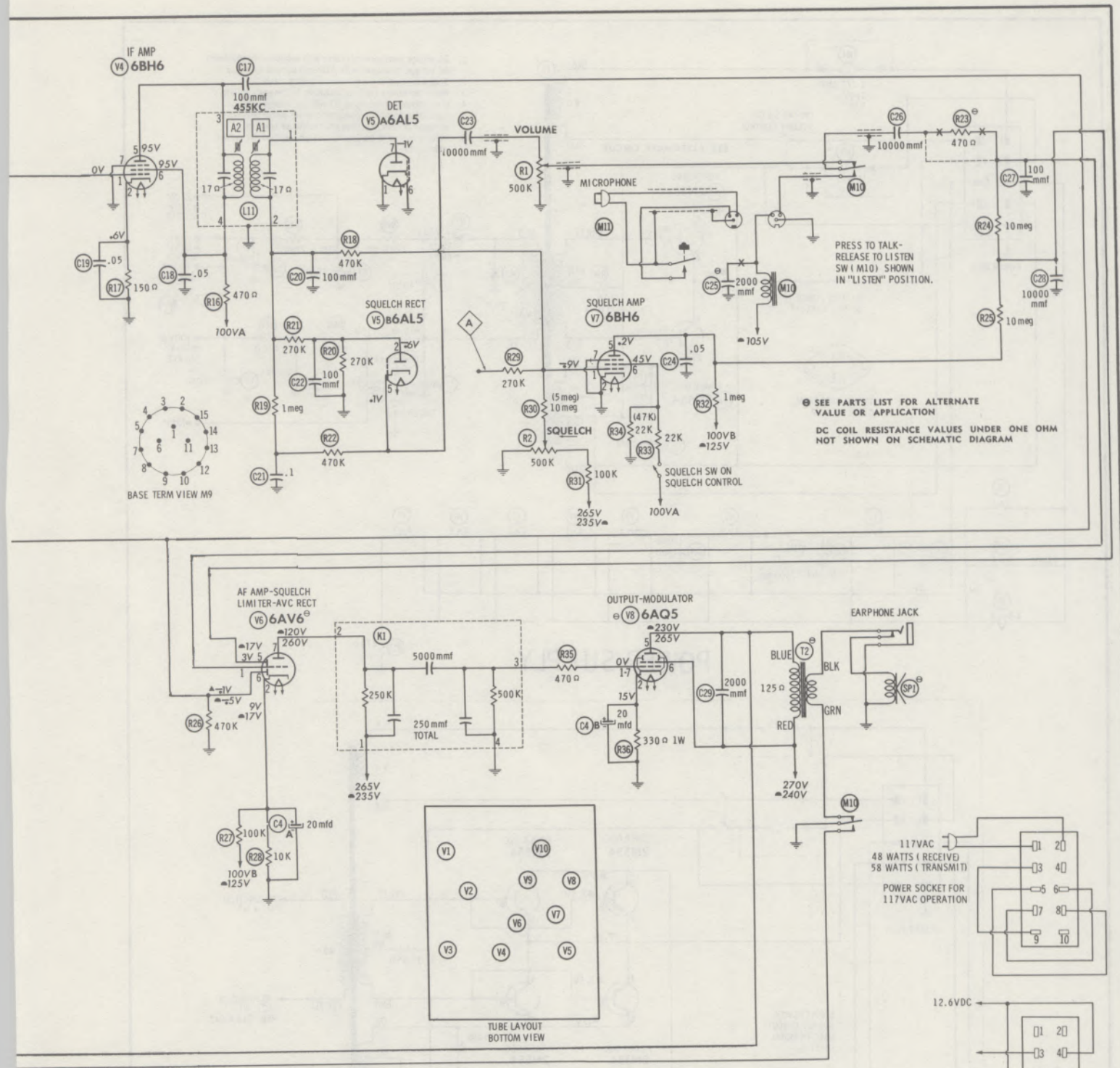

RESISTANCE READINGS

ITEM	TUBE	Pin 1	Pin 2	Pin 3	Pin 4	Pin 5	Pin 6	Pin 7	Pin 8	Pin 9
V1	6BJ6	2.7meg	0Ω	.1Ω	.1Ω	†3200Ω	†3200Ω	0Ω		
V2	6U8A	†11K	100K	†1500Ω	.1Ω	.1Ω	†1500Ω	0Ω	0Ω	100K
V3	6BE6	22K	8Ω	.1Ω	.1Ω	†1500Ω	†1500Ω	470Ω		
V4	6BH6	10K	150Ω	.1Ω	.1Ω	†1500Ω	†1500Ω	0Ω		
V5	6AL5	0Ω	270K	.1Ω	.1Ω	2meg	0Ω	540K		
V6	6AV6	†21meg	10K	.1Ω	.1Ω	†11meg	470K	†200K		
V7	6BH5	1meg	0Ω	.1Ω	.1Ω	†1meg	†15K	0Ω		
V8	6AQ5A	500K	330Ω	.1Ω	.1Ω	†345Ω	†220Ω	NC		
V9	12BY7A	▲470Ω	100K	0Ω	.1Ω	.1Ω	.1Ω	†230Ω	†22K	0Ω
V10	5763	†345Ω	NC	0Ω	.1Ω	.1Ω	†22K	▲150Ω	22K	22K

SEE POWER-SUPPLY SCHEMATIC
ON PAGE 156

RESISTANCE MEASUREMENTS FOR X1 AND X2 NOT GIVEN BECAUSE OF
THE WIDE VARIATION IN INTERNAL TRANSISTOR RESISTANCE.
ALL MEASUREMENTS MADE IN "RECEIVE" POSITION, WITH SQUELCH ON, UNLESS OTHERWISE DESIGNATED.

- ▲ MEASURED IN "TRANSMIT" POSITION.
- † MEASURED FROM OUTPUT OF M1.
- † MEASURED FROM JUNCTION OF C1 & C2A.
- ▲ MEASURED FROM CATHODE
- ■ MEASURED FROM NEGATIVE BATTERY CONNECTOR.
- NC NO CONNECTION

ALL RESISTANCE MEASUREMENTS MADE USING 117VAC POWER CORD.
ALL TRANSISTOR MEASUREMENTS MADE IN DC OPERATION.

VOCALINE MODELS ED-27-6, ED-27-12, ED-27M-6, ED-27M-12

1. DC voltage measurements taken with vacuum tube voltmeter; AC voltages measured with 1000 ohm per volt voltmeter.
2. Socket connections are shown as bottom views.
3. Measured values are from socket pin to common ground.
4. Line voltage maintained at 117 volts for voltage readings.
5. Nominal tolerance on component values makes possible a variation of ±15% in voltage and resistance readings.
6. Volume control at maximum, no signal applied for voltage measurements.

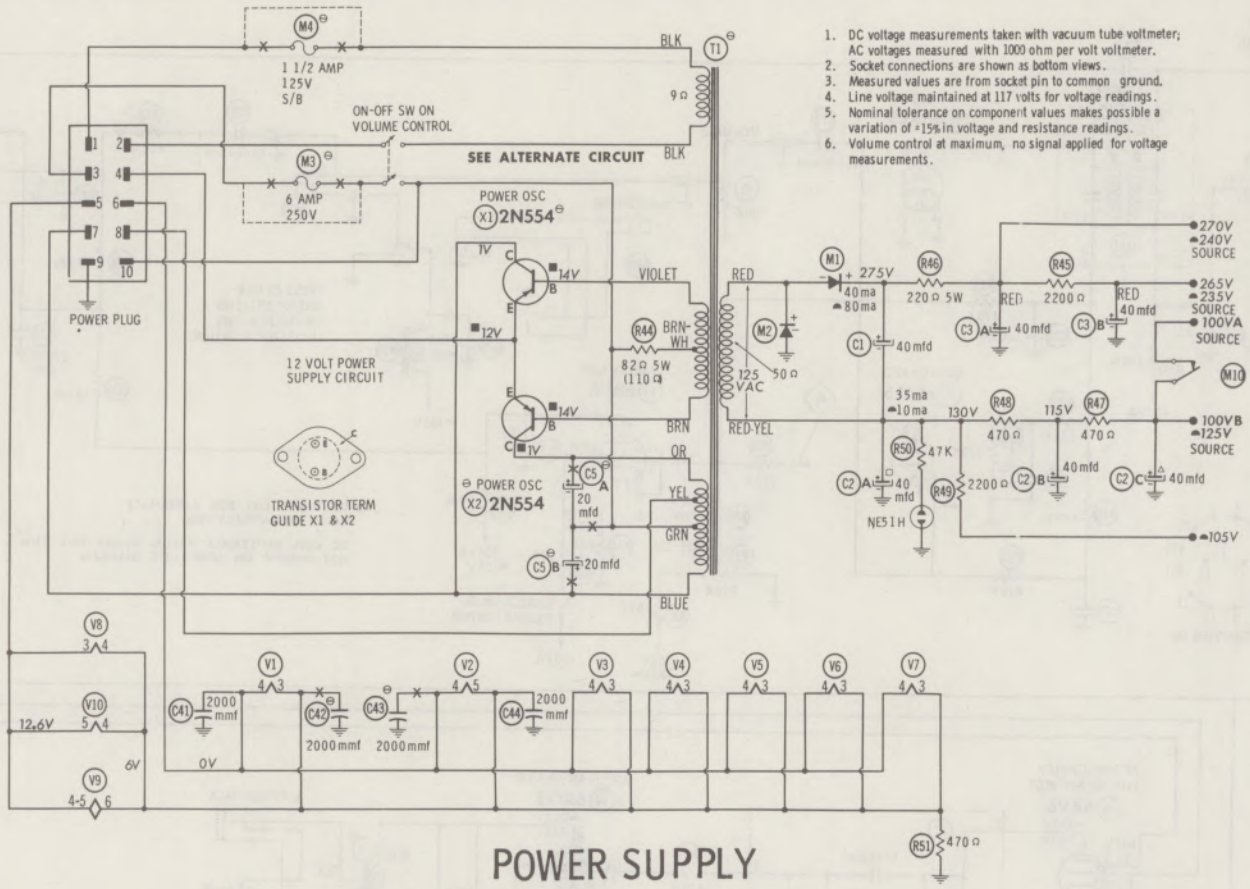

POWER SUPPLY

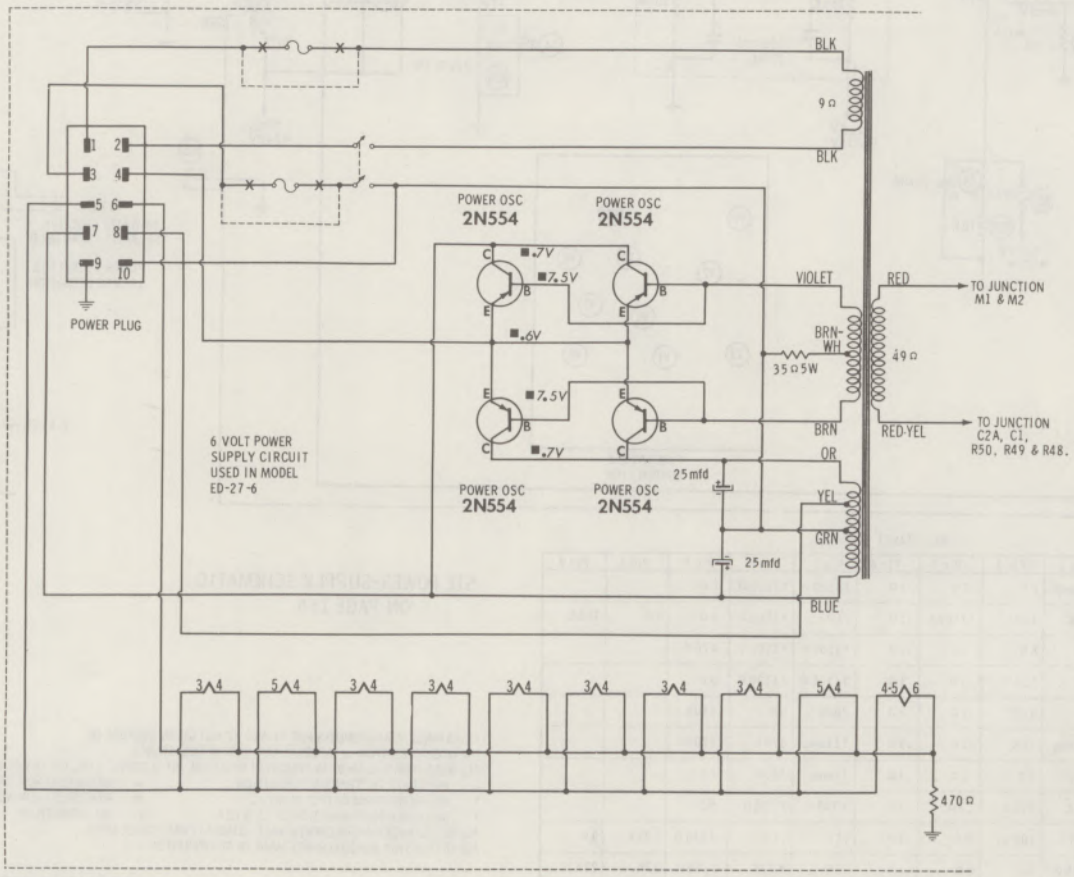

NUMBERS ASSIGNED TO COILS, SWITCHES, PLUGS, SOCKETS, AND TRANSFORMERS ARE TO FACILITATE CIRCUIT TRACING OR COMPONENT REPLACEMENT AND MAY NOT NECESSARILY BE FOUND ON THE UNIT.

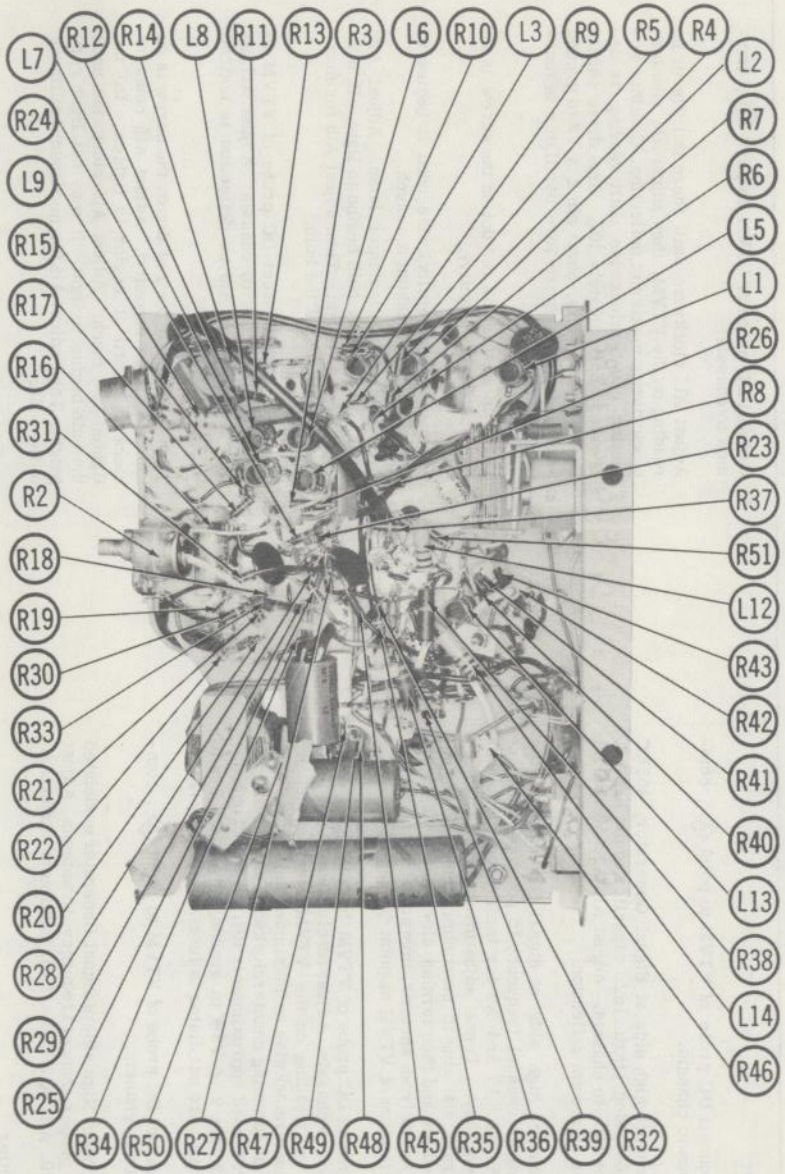

CHASSIS BOTTOM VIEW
RESISTOR & INDUCTOR IDENT.

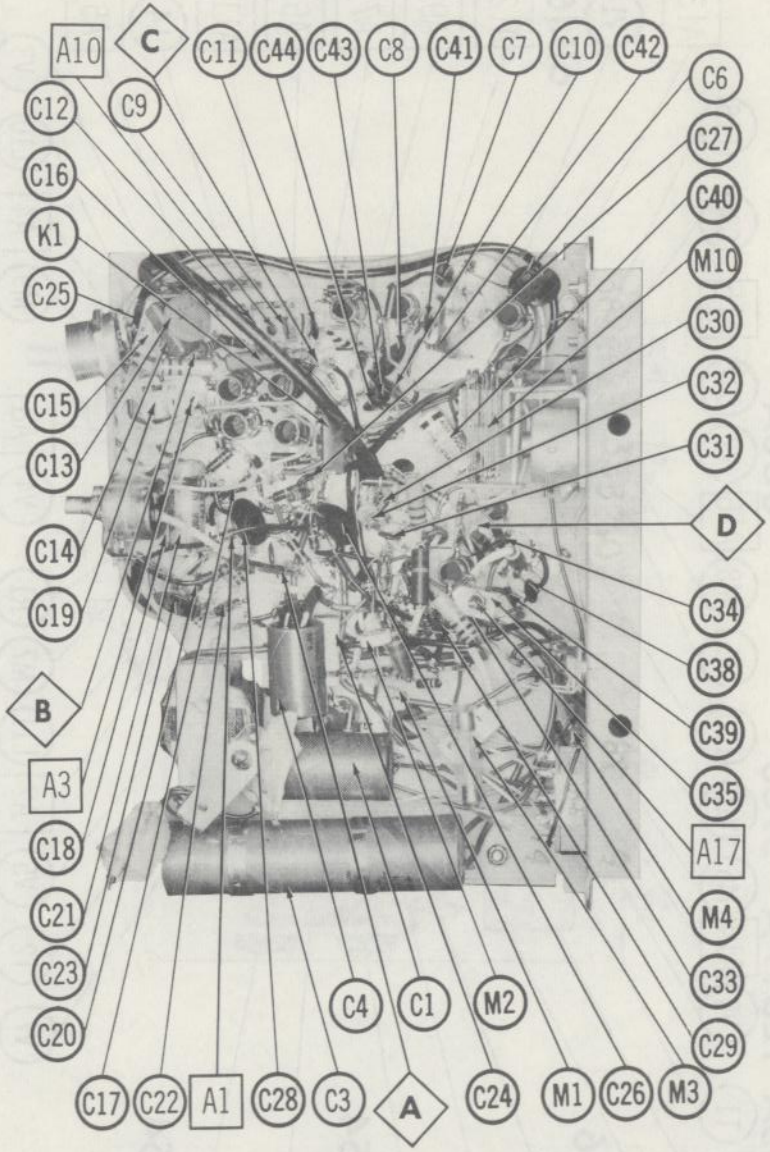

CHASSIS BOTTOM VIEW
ALIGNMENT, CAPACITOR & MISC. IDENT.

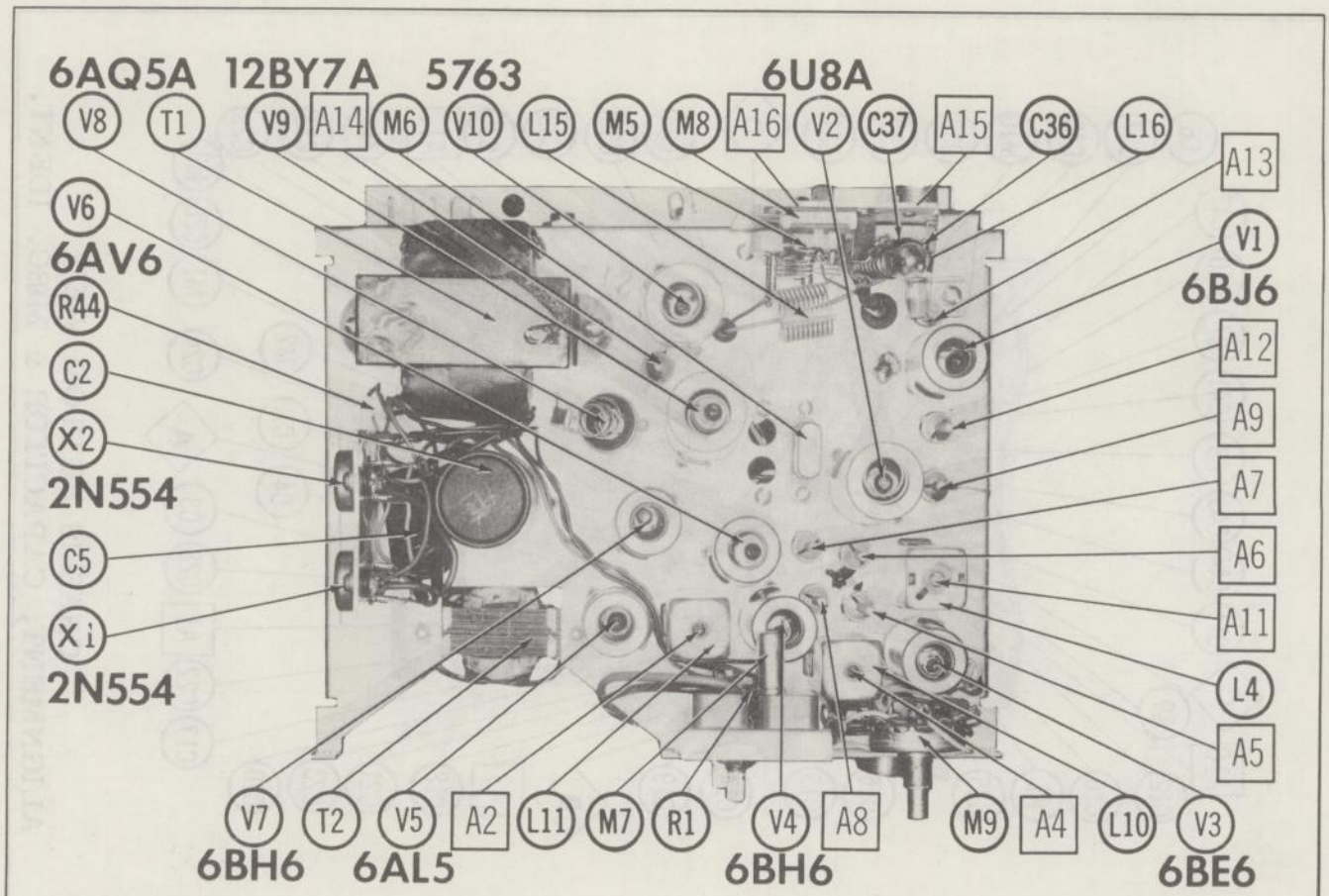

CHASSIS—TOP VIEW

ALIGNMENT INSTRUCTIONS

Receiver

1. Connect DC probe of VTVM to point Ⓐ, common to chassis.

   Connect high side of Signal Generator, 455KC (400~ Mod.) thru .1mfd capacitor to pin 7 of V3, common to chassis. Adjust A1, A2, A3 and A4 for maximum deflection.

2. Connect high side of Signal Generator at the proper channel frequency to point Ⓑ. Adjust A5, A6, A7 and A8 for their proper channel frequency. These adjustments are made by turning the slug to maximum counterclockwise position and then turning clockwise until signal is heard from speaker, then adjust for maximum deflection of VTVM at point Ⓐ.

3. Connect DC probe of VTVM to point Ⓒ, common to chassis. Adjust A9 clockwise until there is no reading on the VTVM; then adjust A9 counterclockwise to maximum deflection; continue adjusting counterclockwise until reading is decreased approximately 10%. Short out oscillator (pin 9 of V2B to ground) several times to make sure oscillator is functioning properly.

4. Connect DC probe of VTVM to point Ⓐ, common to chassis.

   Connect High side of Signal Generator modulated at proper channel frequency, to antenna. Adjust A10, A11, A12 and A13 for maximum deflection.

Transmitter

Connect a 50 ohm dummy load to antenna jack.

1. Connect DC probe of VTVM to point Ⓓ, common to chassis.

   Adjust A14 clockwise until there is little or no reading on the VTVM; then adjust A14 counterclockwise to maximum deflection. Continue adjusting counterclockwise until reading is decreased approximately 10%. Grid drive should read about 35 volts. Short pin 2 of V9 to ground several times to make sure oscillator is functioning properly.

   Turn A16 so that the red dot on the screw is on top (maximum capacity).

   Adjust A15 counterclockwise until it begins to tighten. Do not tighten too much.

   Switch on tuning indicator lamp. Adjust A16 clockwise until the bulb begins to light. It may not light very bright. Then adjust A15 for maximum brilliance of the bulb.

2. To adjust A17, connect DC probe of VTVM to point Ⓓ, common to chassis. Adjust A17 so that when rocking A16 no deflection is noticed on VTVM.

   Turn A16 so that the red dot on the screw is on top (maximum capacity). Adjust A15 counterclockwise until it begins to tighten. Do not tighten too much. Adjust A16 clockwise until the bulb begins to light. It may not light very bright. Then adjust A15 for maximum brilliance of the bulb.

   Make certain that the tuning indicator lamp is switched out of the circuit as soon as adjustments are completed.

PARTS LIST AND DESCRIPTIONS

TUBES

ITEM No.	USE	TYPE (GENERAL ELECTRIC)	TYPE (RAYTHEON)	TYPE (SYLVANIA)
V1	RF Amplifier	6BJ6		
V2	Mixer-Osc.	6U8A		
V3	IF Converter	6BE6		
V4	IF Amplifier	6BH6		
V5	Det. -Squelch Rect.	6AL5		
V6	AF Amp. -Squelch Limiter-AVC Rectifier			6AV6 ①
V7	Squelch Amplifier			6BH6
V8	Output-Modulator			6AQ5A ②
V9	Trans. Oscillator			12BY7A ③
V10	Trans. Output			5763

① Some versions may use 6AQ6 in this application.
② Model ED-27M Serial #16551 (12V) and #02550 (6V) use 6BQ5 or 7189.
③ Some versions may use 6AQ5 in this application.

TRANSISTORS

ITEM No.	ORIG. TYPE	USE	REPLACEMENT DATA: RCA PART No.	REPLACEMENT DATA: RAYTHEON PART No.	REPLACEMENT DATA: SYLVANIA PART No.	NOTES
X1	2N554*	Power Oscillator				PNP
X2	2N554*	Power Oscillator				PNP

* Alternate Type 2N234A or 2N1540.

ELECTROLYTIC CAPACITORS

ITEM No.	RATING: CAP.	RATING: VOLT.	VOCALINE PART No.	AEROVOX PART No.	CORNELL-DUBILIER PART No.	MALLORY PART No.	PYRAMID PART No.	SPRAGUE PART No.	NOTES
C1	40	200	77-38	PRS1580	BR4025	TC58	TD-40-250	TVA-1511	
C2A	■40	150	77-25	AFH3-10	C0090	FP311.5	TMT-3127	TVL-3442	
B	40	150							
C	▲40	150							
C3A	40	450	77-39	PRS2420	BBRD4445	TCD78	TDLD-31	TVA-2740	
B	40	450							
C4A	20	25	77-24	PRS2075	BBRD2202	TCD45	TDLD-3	TVA-2428	
B	20	25							
C5A	20	25	77-24	PRS2075	BBRD2202	TCD45	TDLD-3	TVA-2428	Note 1
B	20	25							Note 1

Note 1. Not used in some versions.

FIXED CAPACITORS

Capacity values given in the rating column are in mfd. for Paper Capacitors, and in mmfd. for Mica and Ceramic Capacitors.

ITEM No.	RATING	REMARKS	AEROVOX PART No.	CENTRALAB PART No.	CORNELL-DUBILIER PART No.	ELMENCO PART No.	MALLORY PART No.	SPRAGUE PART No.
C6	10000		BPD-01	DD-103	BYA10S1	CCD-103	B-110	5HK-S10
C7	2000		BPD-002	DD-202	BYA10D2	CCD-202	B-220	5HK-D20
C8	50 10%		DI-50	DD-500	L10Q5	CCD-500	GP450	10TS-Q50
C9	20 NPO	Note 1	NPO-SI 20	DTZ-20	C10Q2C	CCTO-200	CNO-422	10TCC-Q20
C10	10000		BPD-01	DD-103	BYA10S1	CCD-103	B-110	5HK-S10
C11	2000		BPD-002	DD-202	BYA10D2	CCD-202	B-220	5HK-D20
C12	10 10%	Note 1	DI-10	DD-100	L10Q1	CCD-100	GP410	10TS-Q10
C13	100		BPD-0001	DD-101	L10T1	CCD-101	GP310	10TS-T10
C14	1500 5%		1469-0015		5R5D15	CM-19B-152J	MCE456	MS-215
C15	.05 400V		V84C4S5	DD-503	CUB4S5	4DP-3-503	GEM-415	4TM-S50
C16	3000 10%		1469-003		1R5D3	CM-20B-302K	MCE461	MS-23
C17	100		BPD-0001	DD-101	L10T1	CCD-101	GP310	10TS-T10
C18	.05 400V		V84C4S5	DD-503	CUB4S5	4DP-3-503	GEM-415	4TM-S50
C19	.05 400V		V84C4S5	DD-503	CUB4S5	4DP-3-503	GEM-415	4TM-S50
C20	100		BPD-0001	DD-101	L10T1	CCD-101	GP310	10TS-T10
C21	.1 400V		P488N-1	DF-104	CUB4P1	4DP-3-104	GEM-401	4TM-P10
C22	100		BPD-0001	DD-101	L10T1	CCD-101	GP310	10TS-T10
C23	10000		BPD-01	DD-103	BYA10S1	CCD-103	B-110	5HK-S10
C24	.05 400V		V84C4S5	DD-503	CUB4S5	4DP-3-503	GEM-415	4TM-S50
C25	2000	Note 2	BPD-002	DD-202	BYA10D2	CCD-202	B-220	5HK-D20
C26	10000		BPD-01	DD-103	BYA10S1	CCD-103	B-110	5HK-S10
C27	100		BPD-0001	DD-101	L10T1	CCD-101	GP310	10TS-T10

FIXED CAPACITORS (cont)

ITEM No.	RATING	REMARKS	AEROVOX PART No.	CENTRALAB PART No.	CORNELL-DUBILIER PART No.	ELMENCO PART No.	MALLORY PART No.	SPRAGUE PART No.
C28	10000		BPD-01	DD-103	BYA10S1	CCD-103	B-110	5HK-S10
C29	2000		BPD-002	DD-202	BYA10D2	CCD-202	B-220	5HK-D20
C30	10 NPO		NPO-DI 10	DTZ-10	C10Q1C	CCTO-100	CNO-410	10TCC-Q10
C31	2000		BPD-002	DD-202	BYA10D2	CCD-202	B-220	5HK-D20
C32	250		DI-250	DD-251	L10T25	CCD-251	GP325	10TS-T25
C33	100		BPD-0001	DD-101	L10T1	CCD-101	GP310	10TS-T10
C34	50 10%		DI-50	DD-500	L10Q50	CCD-500	GP450	10TS-Q50
C35		#77-19						
C36	100-500	#77-36				304-M		
C37	2000		BPD-002	DD-202	BYA10D2	CCD-202	B-220	5HK-D20
C38	2000		BPD-002	DD-202	BYA10D2	CCD-202	B-220	5HK-D20
C39	2000		BPD-002	DD-202	BYA10D2	CCD-202	B-220	5HK-D20
C40	.05 400V		V84C4S5	DD-503	CUB4S5	4DP-3-503	GEM-415	4TM-S5
C41	2000		BPD-002	DD-202	BYA10D2	CCD-202	B-220	5HK-D20
C42	2000	Note 2	BPD-002	DD-202	BYA10D2	CCD-202	B-220	5HK-D20
C43	2000	Note 2	BPD-002	DD-202	BYA10D2	CCD-202	B-220	5HK-D20
C44	2000		BPD-002	DD-202	BYA10D2	CCD-202	B-220	5HK-D20

\# Vocaline Part Number.
Note 1. Not used when L4 is Part #86-72.
Note 2. Not used in some versions.

CONTROLS

ITEM No.	RATING: RESISTANCE	RATING: WATTS	VOCALINE PART No.	CENTRALAB PART No.	CLAROSTAT PART No.	CTS-IRC PART No.	MALLORY PART No.	INSTALLATION NOTES
R1A	500K	½	79-40	B-60-S	A47-500K-Z	Q13-133	U48	Volume
B	Shaft			Not Req.	FS-3	Not Req.	Not Req.	
C	Switch			Not Req.	SWE-20	76-2	US-27	Power Off-On
R2A	500K	½	79-43S	B-59	A47-500K-S	Q11-133	U50	Squelch
B	Shaft			Not Req.	FS-3	Not Req.	Not Req.	
C	Switch			KR-1	SWE-12	76-1	US-26	Squelch Off-On

RESISTORS

All wattages 1/2 watt, or less, unless otherwise listed.

ITEM No.	RATING	REPLACEMENT DATA: IRC PART No.	REPLACEMENT DATA: WORKMAN TV PART No.	REMARKS
R3	2.2meg			
R4	2200Ω			
R5	100K			
R6	100K			
R7	470Ω			
R8	100K			
R9	100K			
R10	10K			
R11	22K			
R12	270K			
R13	470Ω			(10K) *
R14	470Ω			
R15	10K			
R16	470Ω			
R17	150Ω			
R18	470K			
R19	1meg			
R20	270K			
R21	270K			
R22	470K			
R23	470Ω			Note 1
R24	10meg			
R25	10meg			
R26	470K			
R27	100K			

ITEM No.	RATING	REPLACEMENT DATA: IRC PART No.	REPLACEMENT DATA: WORKMAN TV PART No.	REMARKS
R28	10K			
R29	270K			
R30	10meg			(5meg) *
R31	100K			
R32	1meg			
R33	22K			
R34	22K			(47K) *
R35	470Ω			
R36	330Ω 1W			Note 2
R37	100K			
R38	22K 1W			
R39	470Ω			
R40	22K			
R41	100K			(22K) *
R42	22K 1W			(10K) *
R43	150Ω			
R44	82Ω 5W	PW5-82	5W-SQ-82	(110Ω) *
R45	2200Ω			
R46	220Ω 5W	PW5-220	5W-SQ-220	
R47	470Ω			
R48	470Ω			
R49	2200Ω			
R50	47K			
R51	470Ω			

* Alternate Value.
Note 1. Not used in some versions.
Note 2. 270Ω used when V8 is 6BQ5 or 7189.

PARTS LIST AND DESCRIPTIONS (Continued)

COMPONENT COMBINATIONS

ITEM No.	USE	DESCRIPTION	VOCALINE PART No.	REPLACEMENT DATA
K1	Audio Coupling	250mmf, 5000mmf, 250K, 500K	105-8	Aerovox PA-112-2 Centralab PC-71 Sprague T-4

COILS (RF-IF)

ITEM No.	USE	REPLACEMENT DATA					NOTES
		VOLCALINE PART No.	Merit PART No.	Miller PART No.	Stancor PART No.	Workman TV PART No.	
L1	Ant.	86-14		6250	RTC-8568	T232A	① Some versions use Part #86-72 (4MC). Delete C9, 12. ② Model ED-27M and late versions of ED-27 use Part #86-68.
L2	RF	86-15	TV-118	6171-A	RTC-8609	T216	
L3	Osc. Plate	86-15	TV-118	6171-A	RTC-8609	T216	
L4	1st IF (4.5MC)	86-11 ①	TV-113	6203	RTC-8545	T235	
L5	Osc.	86-16 ②					
L6	Osc.	86-16					
L7	Osc.	86-16					
L8	Osc.	86-16					
L9	RF Choke (1MH)	86-13	BC-513	4652	RTC-8532	T874	
L10	1st IF (455KC)	86-12	BC-352	12-C1	RTC-8632	T607	
L11	2nd IF (455KC)	86-12	BC-353	12-C2	RTC-8633	T608	
L12	RF Choke (1MH)	86-13	BC-513	4652	RTC-8532	T874	
L13	Osc. Plate	86-17	TV-118	6171-A	RTC-8609	T216	
L14	RF Choke (1MH)	86-13	BC-513	4652	RTC-8532	T874	
L15	Final Plate	86-18					
L16	RF Choke (1MH)	86-13	BC-513	4652	RTC-8532	T874	

TRANSFORMER (POWER)

ITEM No.	RATING			REPLACEMENT DATA					NOTES
	AC OPERATION			VOCALINE PART No.	Merit PART No.	Stancor PART No.	Thordarson PART No.	Triad PART No.	
	PRI.	SEC. 1	SEC. 2						
T1	117V ⓐ .58A	120V ⓐ .30A AC	12.6V ⓐ 1.8A	99-14-1 ①					① Model ED-27-12, ED-27M-12 ② Used in Model ED-27-6, ED-27M-6
	DC OPERATION								
	INPUT	OUTPUT							
	12.6V ⓐ 2.5A	120V ⓐ .30A AC							
	6V DC OPERATION								
	INPUT	OUTPUT							
	6.3V ⓐ 7.4A	120V ⓐ .30A AC		99-14-2 ②					

TRANSFORMER (AUDIO OUTPUT)

ITEM No.	IMPEDANCE		REPLACEMENT DATA					NOTES
	PRI.	SEC.	VOCALINE PART No.	Merit PART No.	Stancor PART No.	Thordarson PART No.	Triad PART No.	
T2	5300Ω	3-4Ω	99-4 ①					① Part #99-40 used if V8 is 6BQ5 or 7189.

SPEAKER

ITEM No.	TYPE			REPLACEMENT DATA		NOTES
	SIZE	FIELD	V. C. IMP.	VOCALINE PART No.	QUAM PART No.	
SP1	4"	PM	3-4Ω	98-2	4A07	

POWER RECTIFIERS

ITEM No.	RATING	REPLACEMENT DATA				NOTES
	CURRENT (Measured)	VOCALINE PART No.	RCA PART No.	SARKES TARZIAN PART No.	SYLVANIA PART No.	
M1	.080A	85-5 *	1N1763 *	2F4 *	SR200 *	* Silicon
M2	.080A	85-5 *	1N1763 *	2F4 *	SR200 *	

FUSES

ITEM No.	TYPE	RATING	REPLACEMENT DATA					
			VOCALINE PART No.		LITTELFUSE PART No.		BUSS PART No.	
			FUSE	HOLDER	FUSE	HOLDER	FUSE	HOLDER
M3	3AG	6A 250V P/T	Note 1		318006 (3AG 6A 250V)		GJV6	
M4	3AG	1½A 125V P/T S/B	Note 1		31501.5 (3AG 1½A 125V S/B)		MDV 1½	

Note 1. Not used in some versions.

MISCELLANEOUS

ITEM No.	PART NAME	VOCALINE PART No.	NOTES
M5	Tuning Cap.	77-37	One Section (Requires Extra Ground Wire)
		77-73	One Section (Grounds thru Mounting)
M6	Crystal	112-1-31	Receiver (31MC)
M7	Crystal	112-1-27.105	Transmitter (27.105MC)
M8	Switch	64-41	Antenna, SPST Slide Type
M9	Switch		Channel Selector (Rotary Type)
M10	Relay	93-2	Switching
	Microphone	102-3	

WIRING DATA

General-use Unshielded Hook-up Wire ..... Use BELDEN No. 8530 (Solid) Available in Ten Colors
8524 (Stranded) Available in Ten Colors
Shielded Hook-up Wire ..... Use BELDEN No. 8885
Bonding Strap ..... Use BELDEN No. 8661
Power Cord ..... Use BELDEN No. 1765-B (6 Ft. Length)
1725-K (7½ Ft. Length)

CITIZENS BAND RADIO MANUAL

The growing and widespread popularity of Citizens-band radio has opened an entire new field in communications. Since the introduction of the Class-D service several years ago, there has been an increasing demand for additional servicing facilities to handle this type of two-way equipment. Thus, there are excellent opportunities awaiting qualified technicians who want to build a more profitable business by expanding into the Citizens-band field.

The primary purpose of this manual is to provide data needed by the user or technician. An introductory editorial section at the front describes typical CB equipment, the type of test equipment needed, license qualifications, and some of the problems most likely to be encountered.

Complete PHOTOFACT® service data have been included for 46 popular models. The coverage includes schematics, photos showing component layout and identification, alignment instructions, complete parts lists and replacement data, and other valuable information which will make CB servicing easier and more profitable.

COVERING THESE BRANDS:

APELCO	HEATH	REALISTIC
CITI-FONE	LAFAYETTE	REGENCY
GLOBE	MORROW	U.S.L.
GONSET	RADSON	VIKING
HALLICRAFTERS	RAYTHEON	VOCALINE
	RCA	

HOWARD W. SAMS & CO., INC.
THE BOBBS-MERRILL COMPANY, INC.
Indianapolis • New York

$3.50
$4.40 IN CANADA
CB-1
06052