SPECIFICATIONS

GENERAL:

Channels	: 40 Channels for AM, Upper Side Band and Lower Side Band, utilizing Digital Circuitry
Frequency Range	: 26.965 MHz to 27.405 MHz
Frequency Control	: Digital (Phase Lock Loop) Synthesizer
Frequency Accuracy	: ±100 Hz
Operating Temperature Range	: -20°C to +50°C
Power Requirements	: 13.8V DC (12-16 volts DC, negative or positive ground)
Antenna	: 52 ohm (Coaxial connector)
Microphone	: 600 ohm Dynamic Type
Speaker	: 8 ohm, 3 Watt
Size (H x W x D)	: 2-1/4" x 7-1/4" x 9-1/4" (5.8 x 18.5 x 23.5 cm)
Weight	: 12-1/2 Lbs. (5.7 kg)
Accessories	: DC Power cord with in-line Fuse, Microphone and Microphone Hanger and Mounting Brackets

MEASUREMENT CONDITIONS:

Power Source	: 13.8V DC
Antenna Impedance	: 50 ohm
Test Temperature	: 25°C
AM Modulation Frequency	: 1 kHz
SSB Modulation Frequency, Transmit	: Two tone: 500 Hz and 2400 Hz Single tone: 1 kHz
Mean Signal Input Level	: 1000 μV
Reference Audio Output Power	: 0.5 W
Reference AM Modulation Percentage	: 1 kHz, 30%
Audio Frequency, SSB Receive	: 1 kHz
Audio Output Load	: 8 ohms resistive
Measuring Channel	: 19

NOTE

Repair or adjustment of transmitter circuits must be under supervision of a person with first-or second-class radiotelephone license.
(Refer to FCC Rules and Regulations Part 95, Subpart C & D.)

The frequency of the transmitter should be checked periodically with a secondary frequency standard to insure proper and legal operation.

Best results will be obtained when adjusting the final RF output circuit if the antenna normally used is connected and the chassis is as nearly in the cabinet as possible.

Connect either 50-ohm dummy load or the normally used antenna system.

RECEIVER: (ANL & Noise Blanker Switch OFF)

		UNIT	NOMINAL	LIMIT
Max. Sensitivity	: AM	μV	0.5	1
	SSB	μV	0.25	0.5
Sensitivity for 10 dB S/N	: AM	μV	0.5	1
	SSB	μV	0.25	0.5
AGC Figure of Merit 50 mV for 10 dB Change in Audio Output	: AM	dB	90	80
	SSB	dB	90	80
Overload AGC Characteristics from 100 mV to 1000 mV	: AM	dB	±3	±5
	SSB	dB	±3	±5
Overall Audio Fidelity at 6 dB Down Upper Frequency	: AM	Hz	2100	1750 ~ 2500
	SSB	Hz	4000	2500 ~ 5000
Lower Frequency	: AM	Hz	350	250 ~ 650
	SSB	Hz	350	250 ~ 650
Cross Modulation, RS Standard	: AM	dB	60	50
Adjacent Channel Selectivity (±10 kHz)	: AM	dB	76	60
	SSB	dB	76	60
Maximum Audio Output Power	: AM	W	6	3
	SSB	W	6	3
Audio Output Power at 10% THD	: AM	W	3.5	2.5
	SSB	W	3.5	2.5
THD at 500 mW Audio Output AM: 1 mV Input, 30% Modulation	: AM	%	3	6
80% Modulation	: AM	%	5	8
SSB: 1 mV Input 1 kHz Single tone	: SSB	%	3	6
RF Gain Control Range at Max.	: AM	dB	46	30 ~ 60
	SSB	dB	46	30 ~ 60
S/N Ratio at 1 mV Input	: AM	dB	40	34
	SSB	dB	40	34
Squelch Sensitivity at Threshold	: AM	μV	0.5	1
	SSB	μV	0.5	1
Squelch Sensitivity at Maximum	: AM	μV	1000	300 ~ 3000
	SSB	μV	1000	300 ~ 3000
Skirt Rejection (±20 kHz)	: AM	dB	80	70
	SSB	dB	86	76
S Meter Sensitivity at "S-9" (No Modulation AM)	: AM	μV	100	50 ~ 200
	SSB	μV	100	50 ~ 200
Image Rejection Ratio fo+(2x7.8 MHz)	: AM	dB	76	66
	SSB	dB	76	66
1/2 IF Rejection Ratio fo+7.8 MHz/2	: AM	dB	90	80
	SSB	dB	90	80
IF Rejection Ratio 7.8 MHz	: AM	dB	90	75
	SSB	dB	90	75
Oscillator Dropout Voltage	: AM	V	7	11
	SSB	V	7	11
Clarifier Range	: AM	kHz	±1.25	±0.6 ~ ±2.5
	SSB	kHz	±1.25	±0.6 ~ ±2.5
Spurious Rejection Ratio In Band	: AM	dB	75	56
	SSB	dB	75	56
Out of Band	: AM	dB	75	50
	SSB	dB	75	50

		UNIT	NOMINAL	LIMIT
Battery Drain at No Signal (DC)	: AM	mA	250	500
	SSB	mA	250	500
Battery Drain at Maximum Audio Output Power (DC)	: AM	mA	1000	1500
	SSB	mA	1000	1500
PUBLIC ADDRESS:				
Microphone Sensitivity for 3W Output Power at 1 kHz		mV	1.5	3
Maximum Output Power		W	6	3
TRANSMITTER:				
Frequency Tolerance at 25°C (5 Minutes after switch on)	: AM	%	±0.0005	±0.003
	SSB	%	±0.0005	±0.003
Carrier Power at No Modulation	: AM	W	4.0 max.	3.5 ~ 4.0
PEP Power, Two tone, SSB	: SSB	W PEP	12	10 ~ 12.0
Modulation Distortion at 1 kHz, 80% Modulation	: AM	%	3	8
Spurious Harmonic Emission	: AM	dB	-65	-60
	SSB	dB	-65	-60
Carrier Suppression	: SSB	dB	-60	-40
All Unwanted Sideband Suppression at 2.5 kHz	: SSB	dB	-55	-40
Modulation Frequency Response at 6 dB Down (1 kHz, 0 dB reference;				
Lower Frequency	: AM	Hz	450	250 ~ 650
	SSB	Hz	450	250 ~ 650
Upper Frequency	: AM	Hz	3000	2000 ~ 4000
	SSB	Hz	4500	2000 ~ 5000
Carrier Power Uniformity, Ch to Ch at No Modulation	: AM	W	0.3	0.4
Mic Input Level Uniformity, Ch to Ch for 4 watts Output 2.5 kHz Single Tone — SSB		dB	2	3
Mic Input Level Uniformity, LSB to USB for 4 watts Output, 1.5 kHz Single tone		dB	1	3
Microphone Sensitivity				
AM: For 50% Mod.	: AM	mV	0.4	1.0
SSB: For 4 watts PEP	: SSB	mV	0.4	1.0
AMC Range				
AM: 50 — 100% Mod.	: AM	dB	56	50
SSB: 10 -12.0 watts PEP	SSB	dB	56	50
Battery Drain at No Modulation (DC)	: AM	mA	2200	3000
	SSB	mA	500	1000
Battery Drain (DC)				
AM: Max. Mod.	: AM	mA	2200	3000
SSB: Max. PEP.	SSB	mA	2000	3000

Note;
Nominal Specs represent the design specs; all units should be able to approximate these, some will exceed and some may drop slightly below these specs.

Limit Specs represent the absolute worst condition which still might be considered acceptable, in no case should a unit perform to less than within any Limit Spec.

ALIGNMENT OF PLL AND CARRIER OSCILLATOR

1. Test Equipment required:

a. Oscilloscope (DC – 50 MHz)
b. Frequency Counter (0 – 30 MHz)
c. DC Power Supply
d. 50 ohm Load

2. Alignment Procedure:

Connect test equipment as shown below.
(AC/DC selector switch must be in DC position.)

STEP	PRESET TO	CONNECTION	ADJUSTMENT
1	CH: 40, USB, RX, Clarifier in center	TP-9 (lead of R-72)	Adjust L-13 for 3.5V DC reading on Oscilloscope. (Oscilloscope in DC mode)
2	Same as step 1. CH: 1.	TP-9	Check that the voltage is more than 2V DC on Oscilloscope.
3	Same as step 1. CH: 19.	TP-10 (lead of R-193)	Adjust L-18 for maximum reading on Oscilloscope. (Oscilloscope in AC mode).
4	Same as step 3.	TP-1 (lead of R-157)	Adjust L-14 for maximum reading on Oscilloscope.
5	Same as step 3.	TP-1	Adjust CT-3 for 34.987500 MHz ±20 Hz.
6	Same as step 1. CH:19, AM.	TP-1	Adjust L-20 for 34.985000 MHz ±20 Hz.
7	Same as step 1. CH: 19, LSB.	TP-1	Adjust L-19 for 34.9825 MHz ±20 Hz.
8	Same as step 1. CH: 19, LSB, TX.	TP-1	Adjust VR-3 for 34.9825 MHz ±20 Hz.
9	Same as step 1. CH: 19, LSB	TP-3 (lead of R-101)	Adjust CT-2 for 7.797500 MHz $^{+0}_{-5}$ Hz.
10	Same as step 1. CH: 19, USB.	TP-3	Adjust CT-1 for 7.802500 MHz $^{+5}_{-0}$ Hz.
11	Same as step 1. CH: 19, TX.	TP-3	Adjust L-17 for 7.800000 MHz ±5 Hz.

PLL AND CARRIER OSCILLATOR TEST EQUIPMENT SETUP

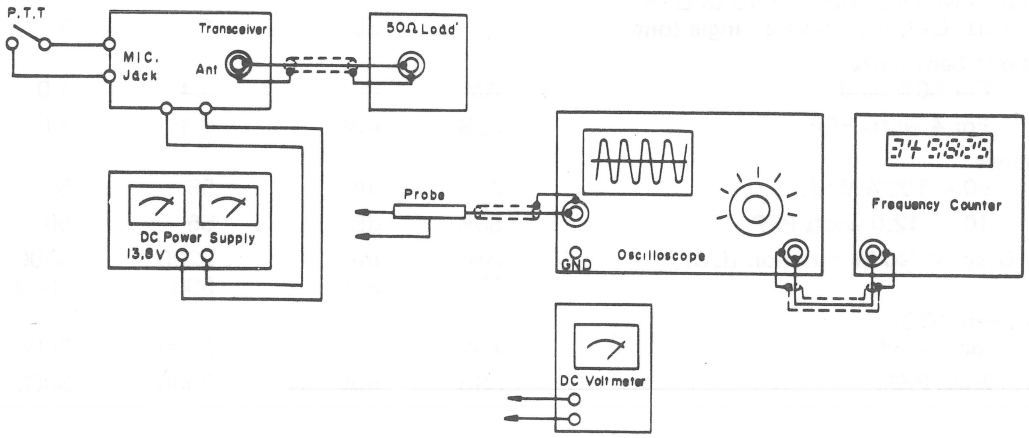

ALIGNMENT OF TRANSMITTER SECTION

1. **Equipment Required:**
   a. AF Oscillator (two required)
   b. AF VTVM (Full scale: 1V DC with RF probe)
   c. DC Ammeter
   d. RF Power Meter
   e. 50 ohm load and Attenuator
   f. Oscilloscope
   g. RF VTVM
   h. Monitor Receiver or Spectrum Analyzer
   i. DC Power Supply (13.8 V/3 amp.)

2. **Alignment Procedure:**
   Connect test equipment as shown below. (AC/DC selector switch must be in DC position.)

STEP	PRESET TO	ADJUSTMENT	REMARKS
1	CH: 19, PA/CB: CB USB mode, TX S1 and S2: OFF	VR8	Break circuit at TP8, place DC mA meter in series. Adjust for 30 mA $^{+5}_{-0}$ mA. If you cannot obtain 30 mA, set VR8 for max. current.
2	Same as step 1	VR9	Break circuit at TP7, place DC mA meter in series. Adjust for 60 mA $^{+5}_{-0}$ mA. If you can not obtain 60 mA, set VR9 for max. current.
	After STEPs 1 and 2, restore circuit at TP8 and TP7.		
3	Same as step 1 OSC1: 500 Hz OSC2: 2400 Hz S1,S2: ON	L26,27,28 and L29	Set VR7 to full CW rotation (ALC "off" condition). Keep the AF ATT for approx. 20V reading on RF VTVM. Then adjust coils for max. reading. Repeat this adjustment several times, reducing the AF input level to the microphone circuit.
4	Same as step 3	L28 and L29	Set the core of L29 at the bottom. Adjust L28 for max. reading on RF VTVM. Then adjust L29 for max. reading. Check the power difference between CH1 and CH40. If it is over 1V on RF VTVM, readjust L29 to obtain within 1V.
5	Same as step 1 AM mode OSC1: 1 kHz S1: ON, 52: OFF	L36	Adjust level of OSC1 for 5 mV reading on AF VTVM, then adjust L36 for maximum reading on RF VTVM
6	Same as step 1 S1, S2: OFF	VR5	Adjust for minimum carrier leakage for both USB and LSB on Spectrum Analyzer or Oscilloscope.
7	Same as step 3 OSC1: 500 Hz S1,S2: ON	VR7	Adjust OSC1 and OSC2 for 5 mV reading on AF VTVM, then adjust VR7 for 24.5V reading on RF VTVM.
8	Same as step 1 AM mode S1 and S2: OFF	VR6	Adjust for 4.0W reading on RF Power meter.
9	Same as step 8	VR10	Adjust for "4W" reading on the Transceiver's meter.
10	Same as step 8	L39	Adjust for minimum 2'nd harmonic (54 MHz) on Spectrum Analyzer or Monitor receiver.
11	AC/DC switch: AC		Connect the AC power cord to AC 120V, check the AM TX power, if it is far lower than 4 watts, it may be caused by low output voltage from the DC power supply.

TRANSMITTER TEST EQUIPMENT SETUP

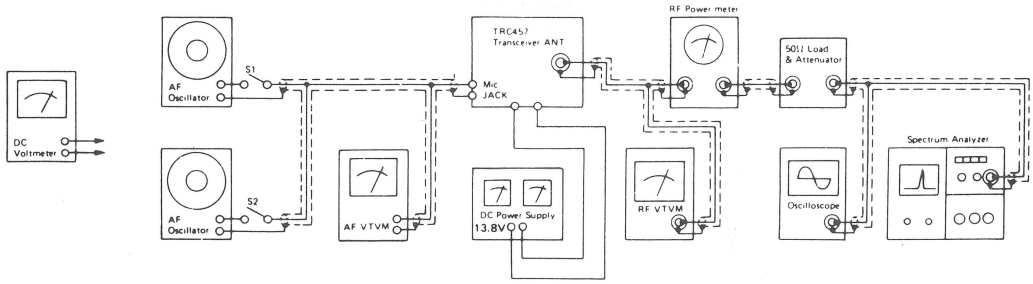

ALIGNMENT OF RECEIVER SECTION

1. **Equipment Required:**
   a. RF Signal Generator (27 MHz Band, 50 ohm output impedance)
   b. AF VTVM
   c. Oscilloscope (For AF Signal)
   d. DC Power Supply
   e. 8 ohm Load
   f. Oscilloscope (0 – 50 MHz)

2. **Procedure**
   Connect Test Equipment as shown below.

   (DC/AC Selector SW must be in DC position.)

STEP	PRESET TO	ADJUSTMENT	PROCEDURE
1	Channel : 19 Clarifier : center Volume : fully CW. RF GAIN: fully CW. Squelch : fully CCW. NB/ANL : off Mode : AM		Set the SG on channel 19, 27.185 MHz with 1 kHz, 30% modulation.
2	Same as step 1	L10,9,8,7,6,5,4 and 3.	Adjust the level of SG to obtain 2V reading on AF VTVM. Then adjust coils for maximum reading on AF VTVM. Repeat this step reducing the SG output.
3	Same as step 1	L8 and 9.	Set the core of L8 at the bottom. Adjust L9 for max. reading on AF VTVM. Then adjust L8 for max. reading. Check the sensitivity difference between CH1 and 40. If it is over 1 dB, re-adjust L8 to obtain within 1 dB.
4	Same as step 1 except squelch is fully CW.	VR12	Set the level of SG to 1000 μV. Then adjust VR12 so that the AF signal will just appear on Oscilloscope.
5	Same as step 1	VR1	Set the level of SG to 100 μV. Then adjust for "S-9" reading on Transceiver's meter.
6	Same as step 1 except NB/ANL switch is ON.	L1 and 2.	Connect the Oscilloscope to TP6 (lead of R-9) Adjust the level of SG to approx. 1.6 μV. Then adjust for max. DC reading.

RECEIVER TEST EQUIPMENT SETUP

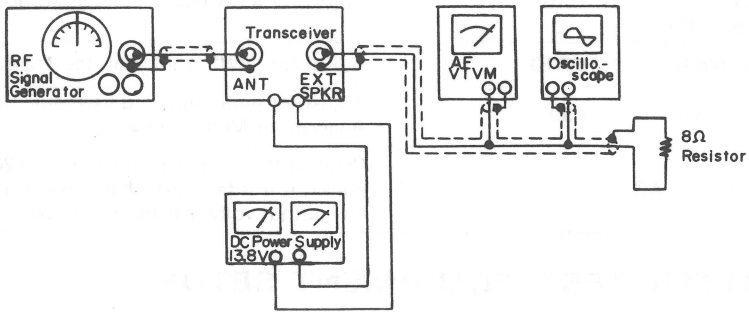

ALIGNMENT INSTRUCTIONS

CHASSIS LAYOUT-ALIGNMENT POINTS

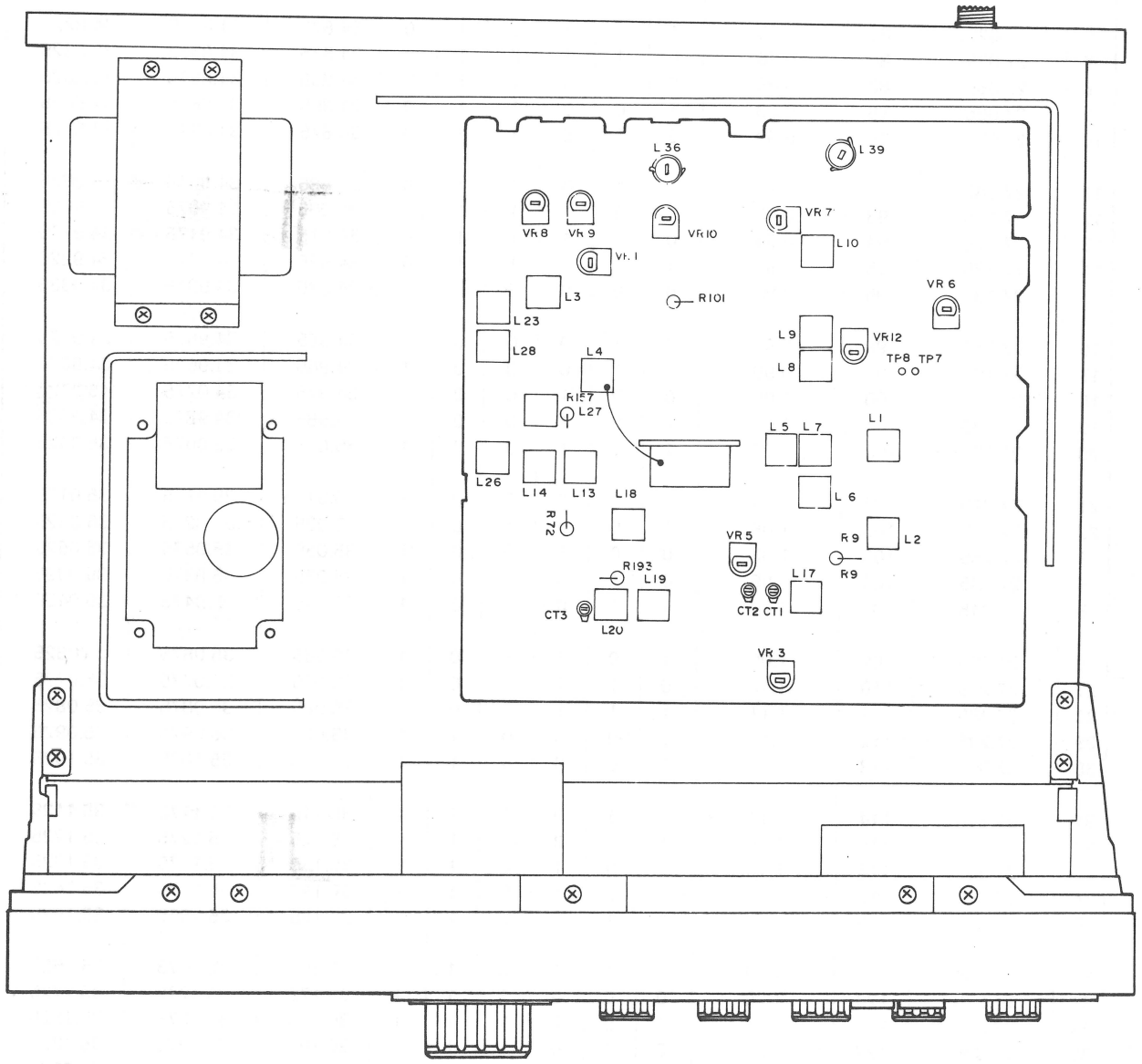

FREQUENCY CHART

CH	ANTENNA OUTPUT FREQUENCY	N	1/N INPUT FREQUENCY	PIN NO. OF IC2						LOCAL OSC OUTPUT FREQUENCY		
				16	15	14	13	12	11	AM.RX	USB&AM.TX	LSB
1	26.965	79	0.79	1	1	1	1	0	0	34.765	34.7675	34.7625
2	26.975	80	0.80	0	0	0	0	1	0	34.775	34.7775	34.7725
3	26.985	81	0.81	1	0	0	0	1	0	34.785	34.7875	34.7825
4	27.005	83	0.83	1	1	0	0	1	0	34.805	34.8075	34.8025
5	27.015	84	0.84	0	0	1	0	1	0	34.815	34.8175	34.8125
6	27.025	85	0.85	1	0	1	0	1	0	34.825	34.8275	34.8225
7	27.035	86	0.86	0	1	1	0	1	0	34.835	34.8375	34.8325
8	27.055	88	0.88	0	0	0	1	1	0	34.855	34.8575	34.8525
9	27.065	89	0.89	1	0	0	1	1	0	34.865	34.8675	34.8625
10	27.075	90	0.90	0	1	0	1	1	0	34.875	34.8775	34.8725
11	27.085	91	0.91	1	1	0	1	1	0	34.885	34.8875	34.8825
12	27.105	93	0.93	1	0	1	1	1	0	34.905	34.9075	34.9025
13	27.115	94	0.94	0	1	1	1	1	0	34.915	34.9175	34.9125
14	27.125	95	0.95	1	1	1	1	1	0	34.925	34.9275	34.9225
15	27.135	96	0.96	0	0	0	0	0	1	34.935	34.9375	34.9325
16	27.155	98	0.98	0	1	0	0	0	1	34.955	34.9575	34.9525
17	27.165	99	0.99	1	1	0	0	0	1	34.965	34.9675	34.9625
18	27.175	100	1.00	0	0	1	0	0	1	34.975	34.9775	45.9725
19	27.185	101	1.01	1	0	1	0	0	1	34.985	34.9875	34.9825
20	27.205	103	1.03	1	1	1	0	0	1	35.005	35.0075	35.0025
21	27.215	104	1.04	0	0	0	1	0	1	35.015	35.0175	35.0125
22	27.225	105	1.05	1	0	0	1	0	1	35.025	35.0275	35.0225
23	27.255	108	1.08	0	0	1	1	0	1	35.055	35.0575	35.0525
24	27.235	106	1.06	0	1	0	1	0	1	35.035	35.0375	35.0325
25	27.245	107	1.07	1	1	0	1	0	1	35.045	35.0475	35.0425
26	27.265	109	1.09	1	0	1	1	0	1	35.065	35.0675	35.0625
27	27.275	110	1.10	0	1	1	1	0	1	35.075	35.0775	35.0725
28	27.285	111	1.11	1	1	1	1	0	1	35.085	35.0875	35.0825
29	27.295	112	1.12	0	0	0	0	1	1	35.095	35.0975	35.0925
30	27.305	113	1.13	1	0	0	0	1	1	35.105	35.1075	35.1025
31	27.315	114	1.14	0	1	0	0	1	1	35.115	35.1175	35.1125
32	27.325	115	1.15	1	1	0	0	1	1	35.125	35.1275	35.1225
33	27.335	116	1.16	0	0	1	0	1	1	35.135	35.1375	35.1325
34	27.345	117	1.17	1	0	1	0	1	1	35.145	35.1475	35.1425
35	27.355	118	1.18	0	1	1	0	1	1	35.155	35.1575	35.1525
36	27.365	119	1.19	1	1	1	0	1	1	35.165	35.1675	35.1625
37	27.375	120	1.20	0	0	0	1	1	1	35.175	35.1775	35.1725
38	27.385	121	1.21	1	0	0	1	1	1	35.185	35.1875	35.1825
39	27.395	122	1.22	0	1	0	1	1	1	35.195	35.1975	35.1925
40	27.405	123	1.23	1	1	0	1	1	1	35.205	35.2075	35.2025

0 = Low level (0 — 1.0 volt)
1 = High level (3.5 — 6 volts)

MAIN P.C. BOARD (TOP VIEW)

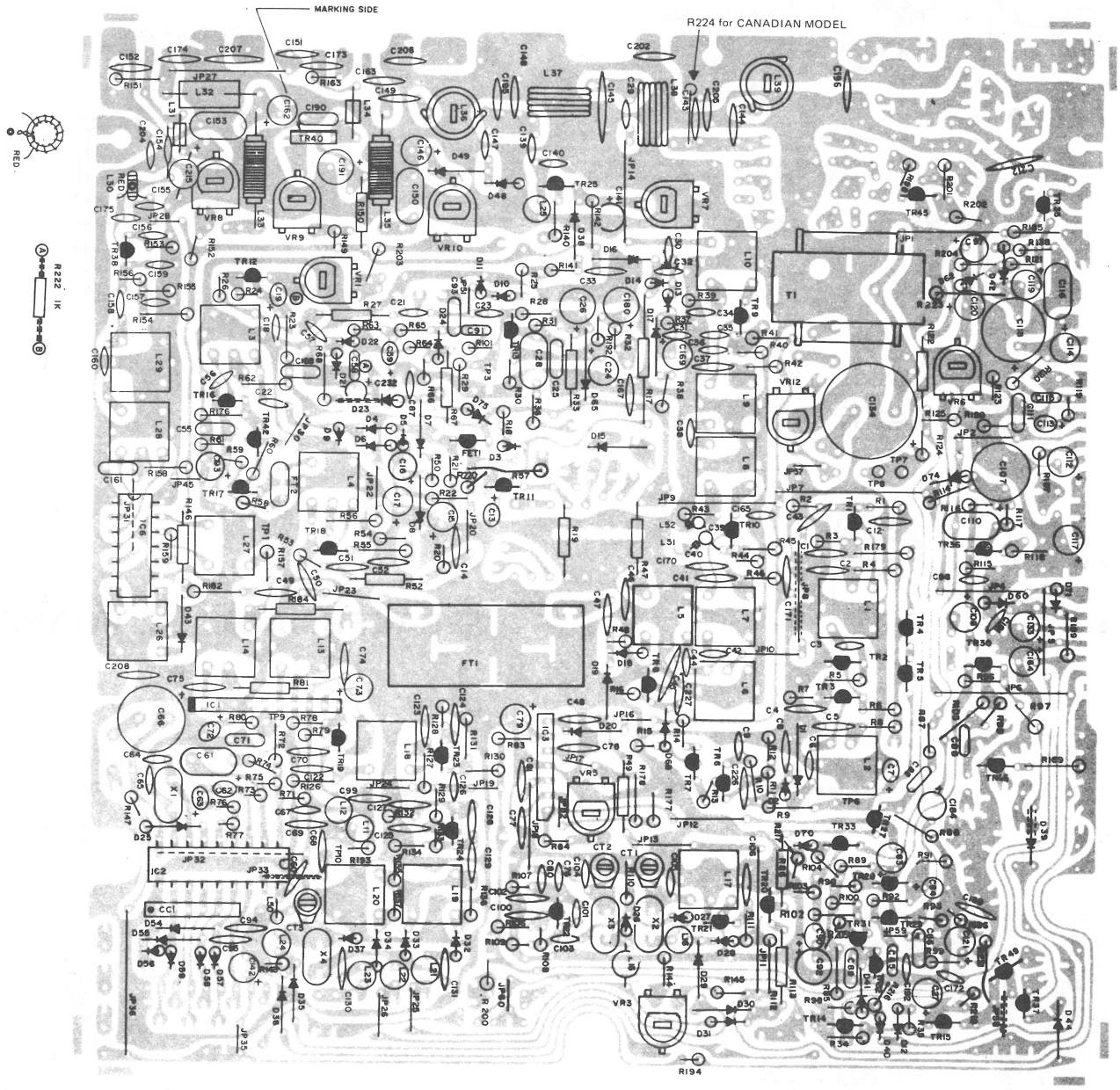

CHANNEL SWITCH P.C. BOARD

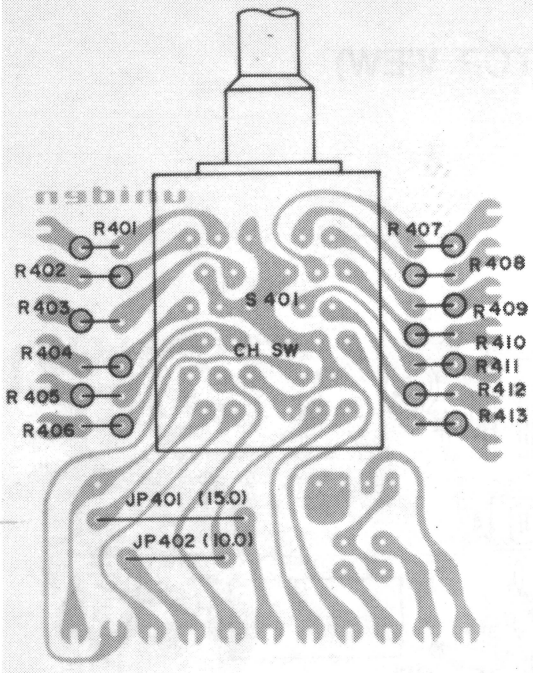

PC-447AB

LED P.C. BOARD

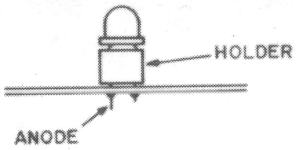

PC 384 AA

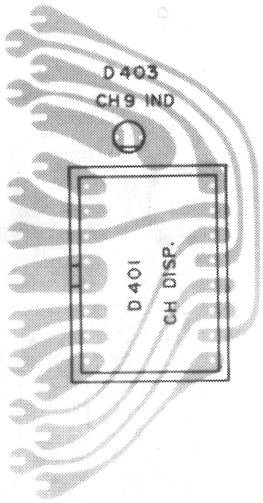

PHONE JACK P.C. BOARD

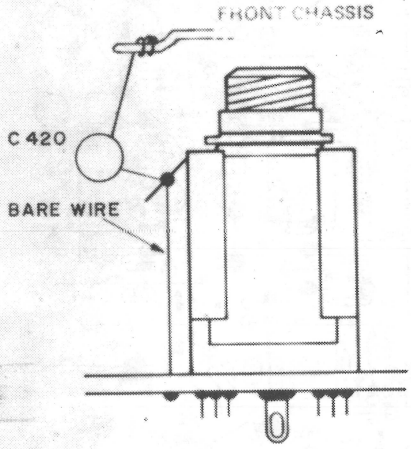

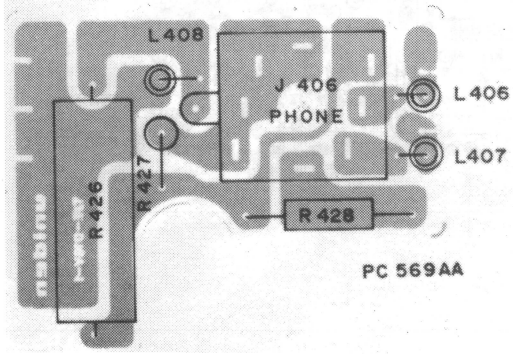

PC 569AA

SPEAKER JACK P.C. BOARD

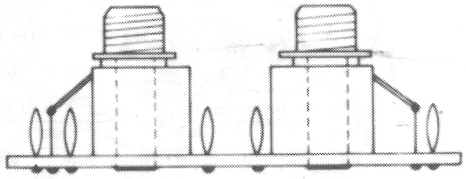

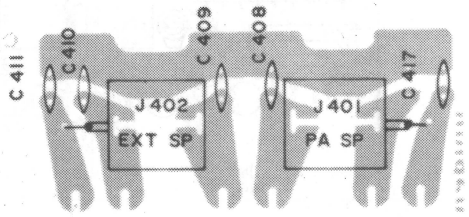

PC-401AA

DC LINE FILTER P.C. BOARD

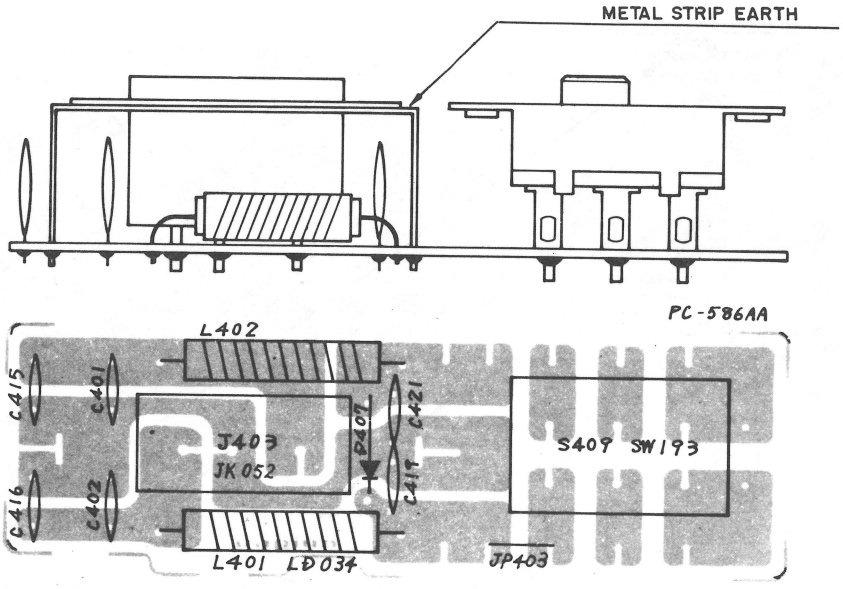

PUSH SWITCH P.C. BOARD

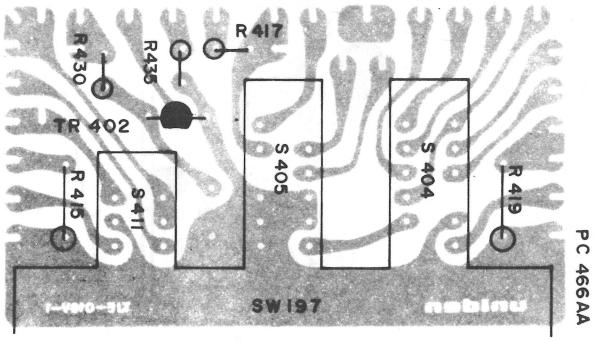

MIC JACK P.C. BOARD

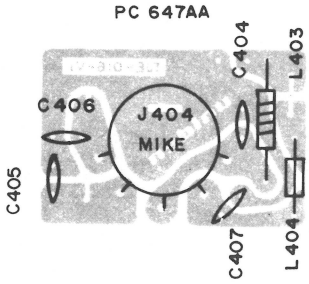

POWER SUPPLY P.C. BOARD

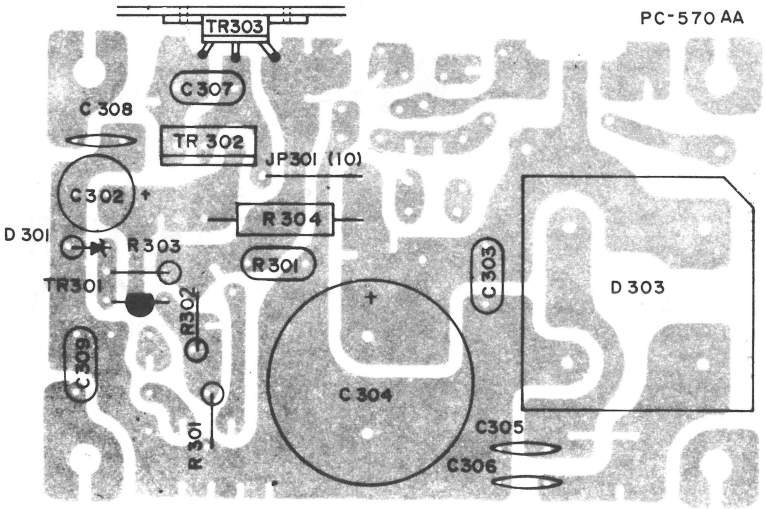

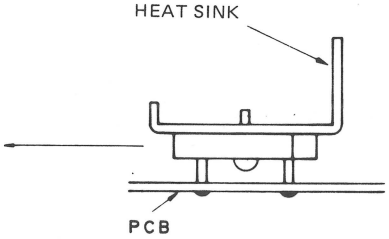

ADDITIONAL PARTS

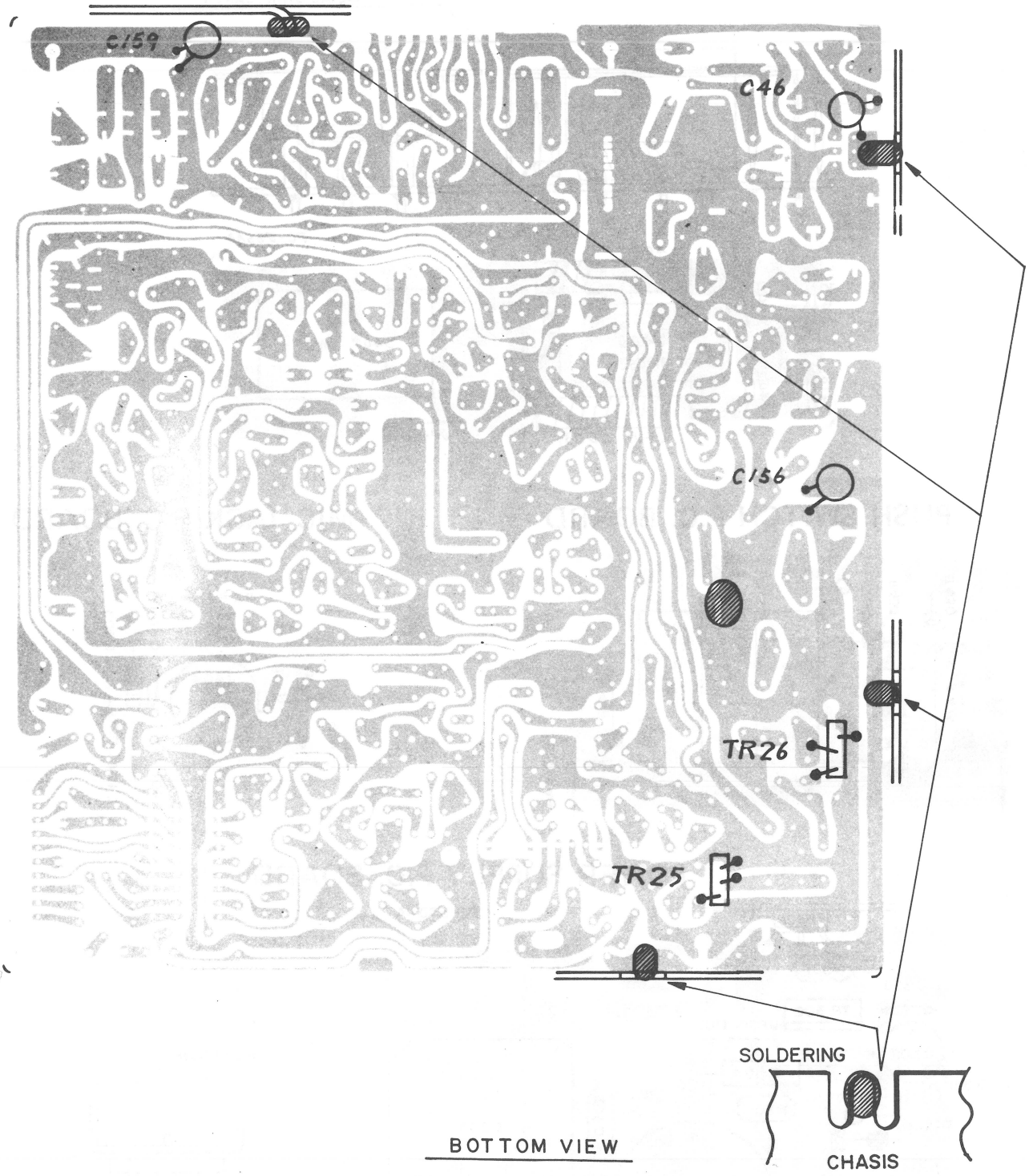

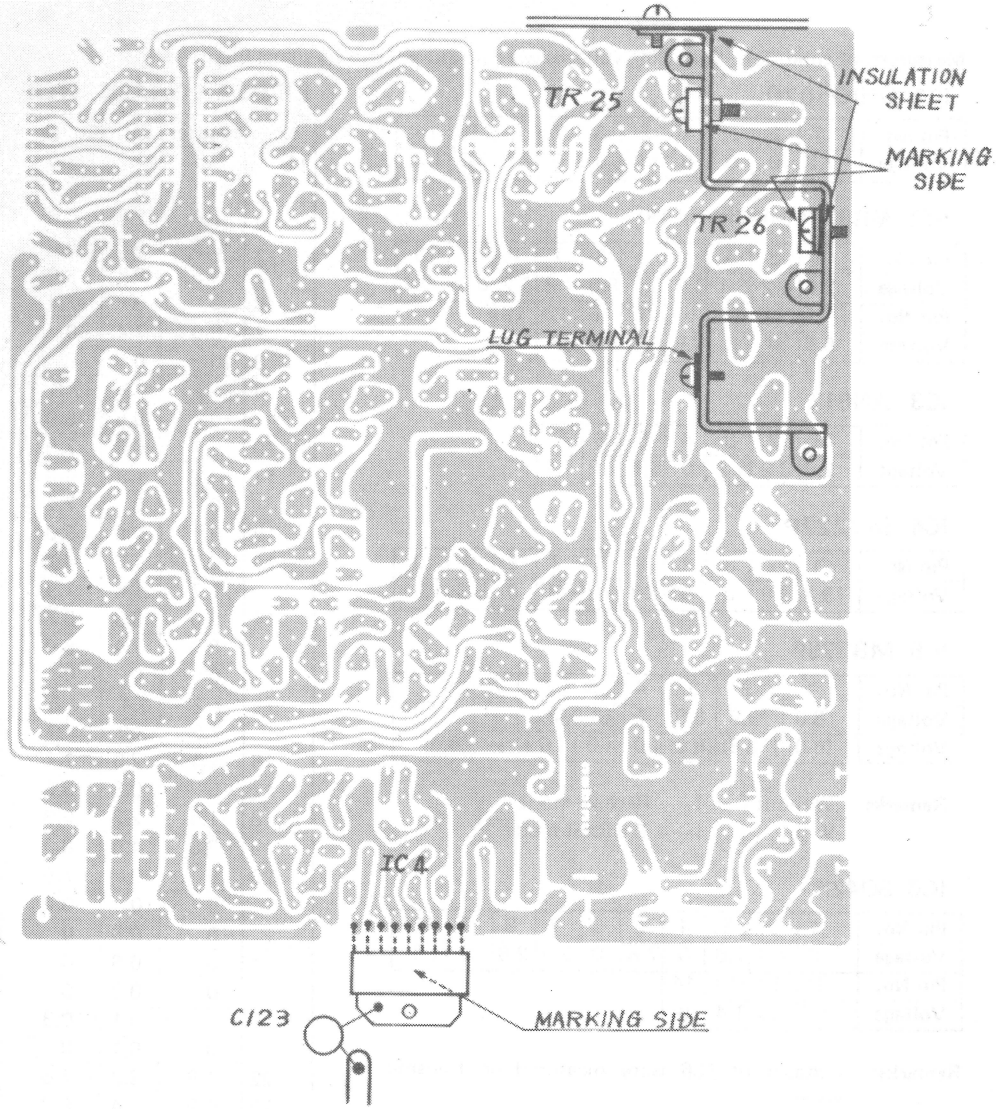

TOP VIEW

WIRING DIAGRAM

NOTE: According to CSA rule, Canadian Model has been changed in AC power section as shown below.

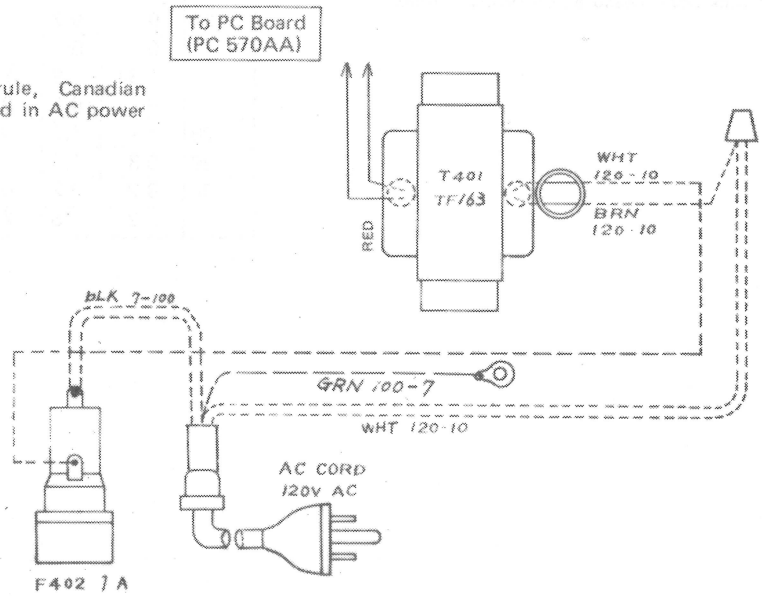

VOLTAGE CHART

Measurement condition: Following voltages were measured with no signal input.

IC1 UHIC-070

Pin No.	1	2	3	4	5	6	7	8	9	10
Voltage	7.8	0	0	0	3.0	0	0	8.0	7.3	4.0

IC2 MB8734 (at Channel 19)

Pin No.	1	2	3	4	5	6	7	8	9	10
Voltage	2.9	4.2	5.4	3.2	3.2	8.0	4.2	5.2	8.0	0
Pin No.	11	12	13	14	15	16	17	18		
Voltage	6.8	0	0	6.8	0.6	8.0	3.4	0		

IC3 AN612

Pin No.	1	2	3	4	5	6	7
Voltage	2.9	3.2	3.2	0	5.7	7.2	7.4

IC4 TA7222P

Pin No.	1	2	3	4	5	6	7	8	9	10
Voltage	13.8	2.9	0	0	1.8	1.8	0	0	6.8	13.1

IC5 MB3756

Pin No.	1	2	3	4	5	6	7	8
Voltage	8.0	13.8	8.0	0	13.8	8.0	–	0
Voltage	(8.0)	(13.8)	(8.0)	(0)	(0)	(0)	–	(8.0)

Remarks: Without ( ) - - - Receive mode
With ( ) - - - Transmit mode

IC6 SO42P

Pin No.	1	2	3	4	5	6	7	8	9	10
Voltage	0	7.8	7.8	0	7.8	0	2.8	2.8	0	1.5
Pin No.	11	12	13	14						
Voltage	1.4	1.5	1.4	0						

Remarks: Voltages of IC6 were measured on transmit mode.

FIELD EFFECT TRANSISTOR

FET 1 Gate 0.2 Source 2.8 Drain 8.0

Remarks: Voltages were measured on receive mode.

BIPOLAR TRANSISTOR

No.	Emitter	Base	Collector	Remarks
TR 1	0.5	1.2	7.8	RX, NB switch ON
2	0	0.7	2.4	RX, NB ON
3	1.6	2.4	6.8	RX, NB ON
4	0.5	0.5	8.0	RX, NB ON
5	0.5	0.4	8.0	RX, NB ON
6	0	0	7.4	RX, NB ON
7	8.0	7.4	0	RX, NB ON
8	0	0	0	
9	3.5	4.3	7.8	RX, RF Gain C.W.
	0	0.5	8.0	RX, RF Gain C.C.W.
10	0.1	0.3	7.9	RX
11	1.0	1.8	1.2	RX
	0	0	7.4	TX
12	0	0.5	8.0	RX
13	0.7	1.3	4.7	RX, SQ, C.C.W.
	1.7	1.4	7.9	RX, SQ, C.W.
14	8.0	8.0	0.7	RX, SQ, C.C.W.
	8.0	7.4	8.0	RX, SQ, C.W.
	0	0	0	TX
15	7.2	3.4	7.6	RX, SQ, C.C.W.
	2.6	3.2	7.3	RX, SQ, C.W.
16	2.1	2.9	7.1	RX
17	0	0.8	3.6	RX
18	1.5	2.2	6.8	RX
19	3.3	4.0	8.0	
20	0	0	7.5	TX, AM
	0	0	0.2	RX, AM
	0	0.8	0	TX and RX, SSB
21	0	0.8	0	TX, AM
	0	0.2	0	RX, AM
	0	0.1	0.3	TX and RX, USB only
	0	0.1	0	TX and RX, LSB only
22	1.6	2.3	7.6	
23	0.9	1.4	8.0	
24	2.8	3.5	6.5	
25	1.5	0	6.2	RX
	2.1	0	6.2	TX, AM
	1.0	0	6.2	TX, SSB
27	0	0.2	2.9	RX, AM
	0	0	2.9	RX, SSB
	1.3	1.9	1.3	TX, AM
	0	0.1	2.8	TX, SSB
28	1.1	1.7	3.2	
29	0.3	1.0	1.7	
30	3.2	3.2	0	
	2.2	1.5	2.2	PA only

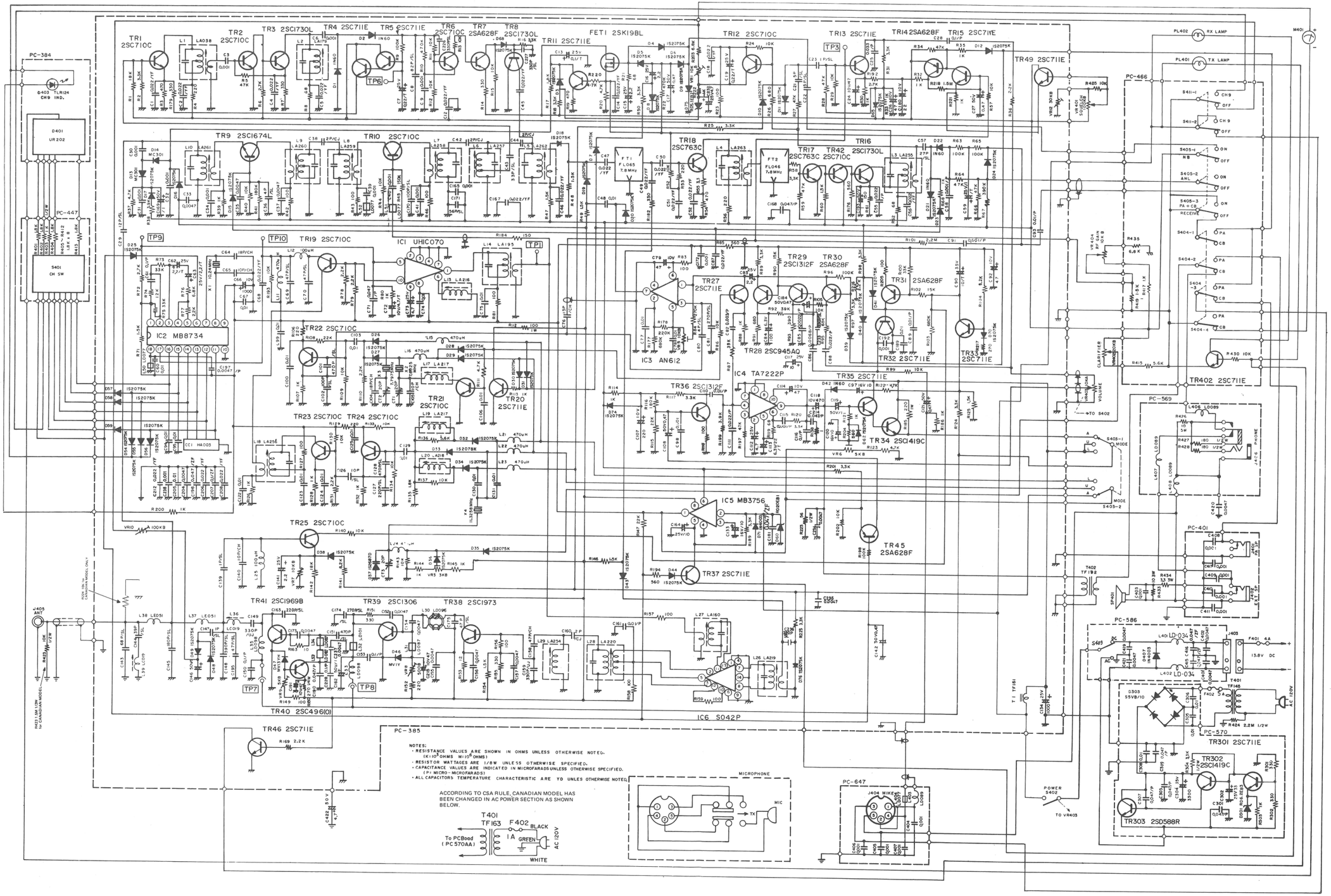
TR1 2SC710C
TR2 2SC710C
TR3 2SC1730L
TR4 2SC711E
TR5 2SC711E
TR6 2SC710C
TR7 2SA628F
TR8 2SC1730L
TR11 2SC711E
FET1 2SK19BL
TR12 2SC710C
TR13 2SC711E
TR14 2SA628F
TR15 2SC711E
TR49 2SC711E
TR9 2SC1674L
TR10 2SC710C
TR18 2SC763C
TR17 2SC763C
TR42 2SC710C
TR16 2SC1730L
TR19 2SC710C
IC1 UHIC070
IC2 MB8734
TR22 2SC710C
TR21 2SC710C
TR20 2SC711E
TR23 2SC710C
TR24 2SC710C
TR27 2SC711E
TR29 2SC1312F
TR30 2SA628F
TR31 2SA628F
TR28 2SC945AQ
TR32 2SC711E
TR33 2SC711E
IC3 AN612
IC4 TA7222P
TR36 2SC1312F
TR35 2SC711E
TR34 2SC1419C
IC5 MB3756
TR45 2SA628F
TR37 2SC711E
TR25 2SC710C
TR41 2SC1969B
TR39 2SC1306
TR38 2SC1973
TR40 2SC496(O)
IC6 S042P
TR46 2SC711E
TR402 2SC711E
TR301 2SC711E
TR302 2SC1419C
TR303 2SD588R
PC-384
PC-447
PC-466
PC-569
PC-401
PC-586
PC-570
PC-385
PC-647
D401 UR202
S401 CH SW
D403 TLR124 CH9 IND.
PL402 RX LAMP
PL401 TX LAMP
M401
J405 ANT
J404 MIKE
J406 PHONE
J403 EXT SP
J402 EXT SP
T401 TF163
F402 1A
BLACK
GREEN
WHITE
AC 120V
To PCBoad (PC570AA)
MICROPHONE
MIC
TX
POWER S402
TO VR403
TO S402
S403-1 MODE
S403-2 MODE
13.8V DC
F401 4A
NOTES:
• RESISTANCE VALUES ARE SHOWN IN OHMS UNLESS OTHERWISE NOTED. (K=10³ OHMS M=10⁶ OHMS)
• RESISTOR WATTAGES ARE 1/8W UNLESS OTHERWISE SPECIFIED.
• CAPACITANCE VALUES ARE INDICATED IN MICROFARADS UNLESS OTHERWISE SPECIFIED. (P: MICRO-MICROFARADS)
• ALL CAPACITORS TEMPERATURE CHARACTERISTIC ARE YD UNLES OTHERWISE NOTED.
ACCORDING TO CSA RULE, CANADIAN MODEL HAS BEEN CHANGED IN AC POWER SECTION AS SHOWN BELOW.

No.	Emitter	Base	Collector	Remarks
31	6.9	6.6	0.7	RX
	6.9	6.6	0	TX
32	0	0.7	0	RX
33	4.1	0.8	6.5	
	1.4	0.7	6.5	RX, AM only
34	13.8	6.1	13.8	
	4.8	5.6	13.0	RX, AM only
35	6.1	6.5	13.8	RX
	5.6	6.2	13.0	TX, AM
	6.1	6.5	13.8	TX, SSB
36	0	0.8	6.3	RX
37	7.6	7.8	13.8	RX
	0	0.6	0	TX
38	0.6	1.3	8.0	TX
39	0	0.2	13.2	RX
	0	0.7	5.3	TX, AM
	0	0.7	13.8	TX, SSB
40	1.0	1.2	2.1	TX
41	0	0	13.2	RX
	0	0.7	5.3	TX, AM
	0	0.7	13.8	TX, SSB
42	2.8	3.5	8.0	RX
45	6.0	5.5	0	RX
46	0	0.7	0.2	TX
49	7.2	8.0	8.0	RX, SQ, C.C.W.
	2.5	2.3	8.0	RX, SQ, Center
	2.5	0.9	8.0	RX, SQ, C.W.
301	6.0	6.7	14.0	
302	14.1	14.7	19.0	
303	13.8	14.1	19.0	
402	0.1	0	13.8	TX

WIRING DIAGRAM FOR USA MODEL

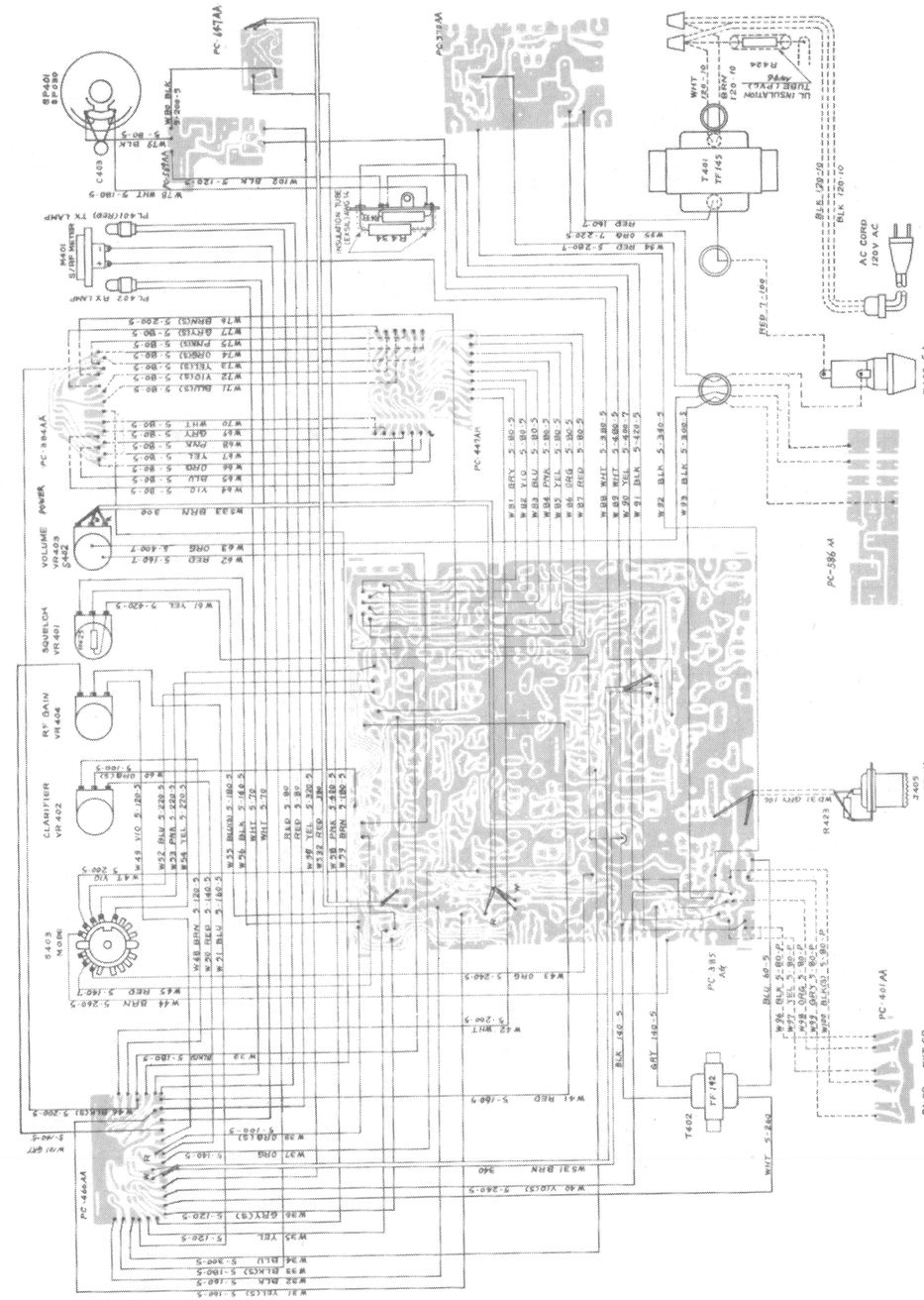

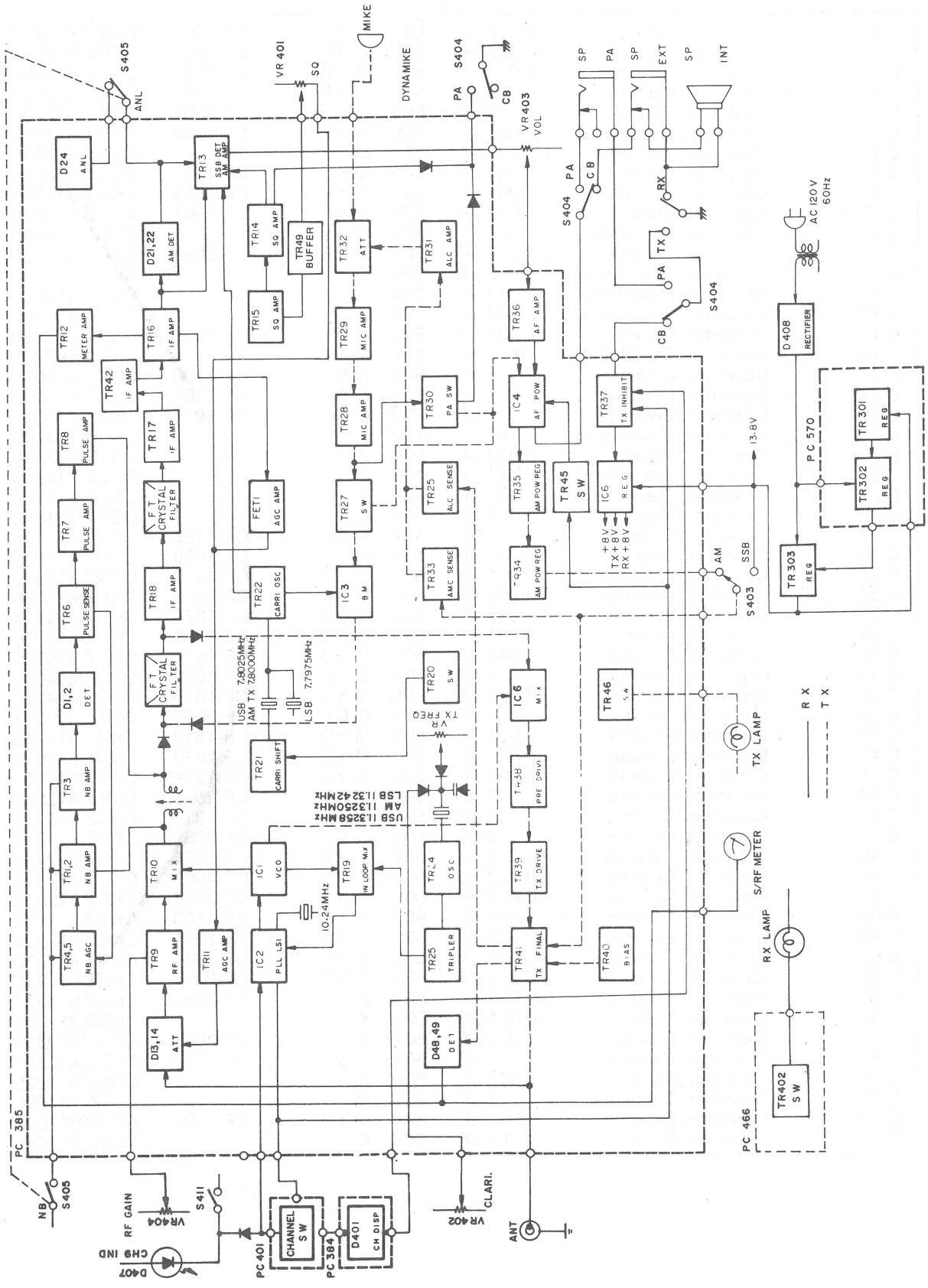
S405
ANL
D24
ANL
TR13
SSB DET
AM AMP
VR 401
SQ
MIKE
DYNAMIKE
PA
S404
CB
VR 403
VOL
SP
PA
SP
EXT
SP
INT
S404
PA
CB
RX
TX
PA
S404
CB
AC 120V
60Hz
D408
RECTIFIER
D21,22
AM DET
TR14
SQ AMP
TR49
BUFFER
TR32
ATT
TR31
ALC AMP
TR12
METER AMP
TR16
IF AMP
TR15
SQ AMP
TR29
MIC AMP
TR36
AF AMP
TR42
IF AMP
TR30
PA SW
IC4
AF POW
TR37
TX INHIBIT
TR8
PULSE AMP
TR17
IF AMP
TR28
MIC AMP
TR25
ALC SENSE
TR35
AM POW REG
TR45
SW
IC6
REG
13.8V
PC 570
TR301
REG
TR302
REG
TR7
PULSE AMP
FT
CRYSTAL
FILTER
FET1
AGC AMP
TR27
SW
TR33
AMC SENSE
TR34
AM POW REG
+8V
TX+8V
RX+8V
AM
SSB
S403
TR303
REG
TR6
PULSE SENSE
TR18
IF AMP
TR22
CARRI OSC
IC3
BM
D1,2
DET
FT
CRYSTAL
FILTER
USB 7.8025MHz
AM TX 7.8000MHz
LSB 7.7975MHz
TR20
SW
IC6
MIX
TR46
SW
TX LAMP
R X
T X
TR3
NB AMP
TR21
CARRI SHIFT
TX FREQ
TR38
PRE DRIVE
USB 11.3258MHz
AM 11.3250MHz
LSB 11.3242MHz
TR1,2
NB AMP
TR10
MIX
IC1
VCO
TR19
IN LOOP MIX
TR24
OSC
TR39
TX DRIVE
S/RF METER
10.24MHz
TR4,5
NB AGC
TR9
RF AMP
TR11
AGC AMP
IC2
PLL LSI
TR25
TRIPLER
TR41
TX FINAL
TR40
BIAS
RX LAMP
D13,14
ATT
D48,49
DET
TR402
SW
PC 466
PC 385
S405
NB
RF GAIN
VR404
S411
D407
CH9 IND
PC401
CHANNEL
SW
PC384
D401
CH DISP
VR402
CLARI.
ANT

REF. NO.	DESCRIPTION				RS. PART NO.	MFRS PART NO.
CAPACITORS						
C-1	Capacitor, Ceramic	0.022 μF	50V	Z YF	CF-2061	CKGZ 812230
C-2	Capacitor, Ceramic	0.022 μF	50V	Z YF	CF-2061	CKGZ 812230
C-3	Capacitor, Ceramic	0.001 μF	50V	M YD	CF-1559	CKDZ 811026
C-4	Capacitor, Ceramic	0.022 μF	50V	Z YF	CF-2061	CKGZ 812230
C-5	Capacitor, Ceramic	0.022 μF	50V	Z YF	CF-2061	CKGZ 812230
C-6	Capacitor, Ceramic	0.001 μF	50V	M YD	CF-1559	CKDZ 811026
C-7	Capacitor, Tantalum	0.22 μF	25V	M		CSEZ 512286
C-8	Capacitor, Ceramic	82 pF	50V	K SL	CF-1847	CCGZ 818205
C-9	Capacitor, Ceramic	0.001 μF	50V	M YD	CF-1559	CKDZ 811026
C-12	Capacitor, Ceramic	0.022 μF	50V	Z YF	CF-2061	CKGZ 812230
C-13	Capacitor, Tantalum	0.1 μF	25V	M		CSEZ 511086
C-14	Capacitor, Ceramic	0.022 μF	50V	Z YF	CF-2061	CKGZ 812230
C-15	Capacitor, Electrolytic	2.2 μF	25V	Z		CELZ 512290
C-16	Capacitor, Electrolytic	2.2 μF	25V	Z		CELZ 512290
C-17	Capacitor, Electrolytic	0.47 μF	50V	Z		CELZ 814780
C-18	Capacitor, Ceramic	0.022 μF	50V	M YF	CF-2061	CKGZ 812230
C-19	Capacitor, Tantalum	0.22 μF	25V	M		CSEZ 512286
C-21	Capacitor, Ceramic	5 pF	50V	C SL	CF-1100	CCGZ 815091
C-22	Capacitor, Ceramic	5 pF	50V	C SL	CF-1100	CCGZ 815091
C-23	Capacitor, Ceramic	1 pF	50V	C SL	CF-1015	CCGZ 811091
C-24	Capacitor, Electrolytic	47 μF	10V	Z		CELZ 114700
C-25	Capacitor, Mylar	0.033 μF	50V	K		CQMZ 813335
C-26	Capacitor, Electrolytic	47 μF	10V	Z		CELZ 114700
C-27	Capacitor, Electrolytic	0.47 μF	50V	Z		CELZ 814780
C-28	Capacitor, Mylar	0.1 μF	50V	K		CQMZ 811045
C-29	Capacitor, Ceramic	12 pF	50V	K SL	CF-1182	CCGZ 811205
C-30	Capacitor, Ceramic	0.001 μF	50V	M YD	CF-1559	CKDZ 811026
C-31	Capacitor, Ceramic	0.001 μF	50V	M YD	CF-1519	CKDZ 811026
C-32	Capacitor, Ceramic	0.001 μF	50V	M YD	CF-1519	CKDZ 811026
C-33	Capacitor, Ceramic	0.0047 μF	50V	M YD	CF-1679	CKDZ 814726
C-34	Capacitor, Ceramic	0.001 μF	50V	M YD	CF-1519	CKDZ 811026
C-35	Capacitor, Ceramic	0.0047 μF	50V	M YD	CF-1679	CKDZ 814726
C-36	Capacitor, Ceramic	4 pF	50V	C SL	CF-1689	CCGZ 814091
C-37	Capacitor, Ceramic	0.0047 μF	50V	M YD	CF-1679	CKDZ 814726
C-38	Capacitor, Ceramic	2 pF	50V	C CJ	CF-2065	CCBZ 812091
C-39	Capacitor, Ceramic	0.001 μF	50V	M YD	CF-1519	CKDZ 811026
C-40	Capacitor, Ceramic	0.001 μF	50V	M YD	CF-1519	CKDZ 811026
C-41	Capacitor, Ceramic	0.001 μF	50V	M YD	CF-1519	CKDZ 811026
C-42	Capacitor, Ceramic	2 pF	50V	C CJ	CF-2065	CCBZ 812091
C-43	Capacitor, Ceramic	33 pF	50V	K SL	CF-1315	CCGZ 813305
C-44	Capacitor, Ceramic	2 pF	50V	C CJ	CF-2065	CCBZ 812091
C-45	Capacitor, Ceramic	0.022 μF	50V	Z YF	CF-2061	CKGZ 812230
C-46	Capacitor, Ceramic	0.022 μF	50V	Z YF	CF-2061	CKGZ 812230
C-47	Capacitor, Ceramic	0.022 μF	50V	Z YF	CF-2061	CKGZ 812230
C-48	Capacitor, Ceramic	0.01 μF	50V	M YD	CF-1709	CKDZ 811036
C-49	Capacitor, Ceramic	0.022 μF	50V	Z YF	CF-2061	CKGZ 812230
C-50	Capacitor, Ceramic	0.022 μF	50V	Z YF	CF-2061	CKGZ 812230
C-51	Capacitor, Ceramic	0.022 μF	50V	Z YF	CF-2061	CKGZ 812230
C-52	Capacitor, Ceramic	0.022 μF	50V	Z YF	CF-2061	CKGZ 812230
C-55	Capacitor, Mylar	0.022 μF	50V	K		CQMZ 812235
C-56	Capacitor, Ceramic	0.022 μF	50V	Z YF	CF-2061	CKGZ 812230
C-57	Capacitor, Ceramic	27 pF	50V	K SL	CF-1269	CCGZ 812705
C-58	Capacitor, Mylar	0.001 μF	50V	K		CQMZ 811025
C-59	Capacitor, Tantalum	1 μF	25V	M		CSEZ 511096
C-60	Capacitor, Ceramic	0.01 μF	50V	M YD	CF-1709	CKDZ 811036
C-61	Capacitor, Mylar	0.1 μF	50V	K		CQMZ 811045

The first code indicates tolerance of capacitance; C = ±0.25pF, D = ±0.5pF, F = ±1pF, G = ±2%, J = ±5%, K = ±10%, M = ±20%, Z = +80% -20%

REF. NO.	DESCRIPTION				RS. PART NO.	MFRS PART NO.
C-62	Capacitor, Tantalum	2.2 μF	25V	M		CSEZ 512296
C-63	Capacitor, Tantalum	2.2 μF	25V	M		CSEZ 512296
C-64	Capacitor, Ceramic	18 pF	50V	K CH	CF-1225	CCCZ 811805
C-65	Capacitor, Ceramic	10 pF	50V	D CH	CF-1141	CCCZ 811002
C-66	Capacitor, Electrolytic	1000 μF	10V	Z		CELZ 111020
C-67	Capacitor, Ceramic	0.01 μF	50V	M YD	CF-1709	CKDZ 811036
C-68	Capacitor, Ceramic	0.022 μF	50V	Z YF		CKGZ 812230
C-69	Capacitor, Ceramic	47 pF	50V	K SL	CF-1366	CCGZ 814705
C-70	Capacitor, Ceramic	47 pF	50V	K SL	CF-1366	CCGZ 814705
C-71	Capacitor, Mylar	0.047 μF	50V	K		CQMZ814735
C-72	Capacitor, Tantalum	4.7 μF	10V	M		CSEZ 114796
C-73	Capacitor, Electrolytic	4.7 μF	25V	Z		CELZ 514790
C-74	Capacitor, Ceramic	0.01 μF	50V	M YD	CF-1709	CKDZ 811036
C-75	Capacitor, Ceramic	0.01 μF	50V	M YD	CF-1709	CKDZ 811036
C-76	Capacitor, Ceramic	15 pF	50V	K CH	CF-1190	CCCZ 811505
C-77	Capacitor, Ceramic	0.01 μF	50V	M YD	CF-1709	CKDZ 811036
C-78	Capacitor, Ceramic	0.01 μF	50V	M YD	CF-1709	CKDZ 811036
C-79	Capacitor, Electrolytic	47 μF	10V	Z		CELZ 114700
C-80	Capacitor, Ceramic	4 pF	50V	C SL	CF-1089	CCGZ 814091
C-81	Capacitor, Ceramic	270 pF	50V	K SL	CF-1504	CCGZ 812715
C-82	Capacitor, Mylar	0.003 μF	50V	K		CQMZ813325
C-83	Capacitor, Electrolytic	2.2 μF	25V	Z		CELZ 512290
C-84	Capacitor, Electrolytic	100 μF	6.3V	Z		CELZ 901010
C-85	Capacitor, Mylar	0.0022 μF	50V	K		CQMZ812225
C-86	Capacitor, Mylar	0.0068 μF	50V	K		CQMZ816825
C-87	Capacitor, Ceramic	0.022 μF	50V	Z YF	CF-2061	CKGZ 812230
C-88	Capacitor, Mylar	0.022 μF	50V	K		CQMZ812235
C-89	Capacitor, Mylar	0.01 μF	50V	K		CQMZ811035
C-90	Capacitor, Tantalum	10 μF	35V	M		CSEZ 661006
C-91	Capacitor, Mylar	0.001 μF	50V	K		CQMZ811025
C-92	Capacitor, Electrolytic	47 μF	10V	Z		CELZ 114700
C-93	Capacitor, Mylar	0.01 μF	50V	K		CQMZ811035
C-94	Capacitor, Ceramic	0.01 μF	50V	M YD	CF-1709	CKDZ 811036
C-95	Capacitor, Ceramic	0.01 μF	50V	M YD	CF-1709	CKDZ 811036
C-97	Capacitor, Electrolytic	10 μF	16V	Z		CELZ 311000
C-98	Capacitor, Ceramic	0.001 μF	50V	M YD	CF-1559	CKDZ 811026
C-99	Capacitor, Ceramic	0.01 μF	50V	M YD	CF-1709	CKDZ 811036
C-100	Capacitor, Ceramic	0.01 μF	50V	M YD	CF-1709	CKDZ 811036
C-101	Capacitor, Ceramic	470 pF	50V	K SL	CF-1519	CCGZ 814715
C-102	Capacitor, Ceramic	100 pF	50V	K SL	CF-1425	CCGZ 811015
C-103	Capacitor, Ceramic	0.01 μF	50V	M YD	CF-1709	CKDZ 811036
C-104	Capacitor, Ceramic	18 pF	50V	K CH	CF-1225	CCCZ 811805
C-105	Capacitor, Ceramic	10 pF	50V	D CJ	CF-2064	CCBZ 811002
C-106	Capacitor, Ceramic	0.01 μF	50V	M YD	CF-1709	CKDZ 811036
C-107	Capacitor, Electrolytic	220 μF	10V	Z		CELZ 112210
C-108	Capacitor, Electrolytic	0.47 μF	50V	Z		CELZ 814780
C-110	Capacitor, Mylar	0.01 μF	50V	K		CQMZ811035
C-111	Capacitor, Mylar	0.022 μF	50V	K		CQMZ812235
C-112	Capacitor, Electrolytic	4.7 μF	25V	Z		CELZ 514790
C-113	Capacitor, Tantalum	22 μF	6.3V	M		CSEZ 902206
C-114	Capacitor, Electrolytic	47 μF	10V	Z		CELZ 114700
C-115	Capacitor, Mylar	0.001 μF	50V	K		CQMZ811025
C-116	Capacitor, Mylar	0.1 μF	50V	K		CQMZ811045
C-117	Capacitor, Electrolytic	10 μF	25V	Z		CELZ 511000
C-118	Capacitor, Electrolytic	470 μF	10V	Z		CELZ 114710
C-119	Capacitor, Electrolytic	1 μF	50V	Z		CELZ 811090
C-120	Capacitor, Electrolytic	10 μF	16V	Z		CELZ 311000
C-121	Capacitor, Electrolytic	0.47 μF	50V	Z		CELZ 814780

REF. NO.	DESCRIPTION	RS. PART NO.	MFRS PART NO.
DIODES			
D-1	Diode, 1N60	DX-0161	DDAY001004
D-2	Diode, 1N60	DX-0161	DDAY001004
D-3	Diode, 1S2075K	DX-1118	DDAY063001
D-4	Diode, 1S2075K	DX-1118	DDAY063001
D-5	Diode, 1S2075K	DX-1118	DDAY063001
D-6	Diode, 1S2075K	DX-1118	DDAY063001
D-7	Diode, 1S2075K	DX-1118	DDAY063001
D-8	Diode, 1S2075K	DX-1118	DDAY063001
D-9	Diode, 1S2075K	DX-1118	DDAY063001
D-10	Diode, 1S2075K	DX-1118	DDAY063001
D-11	Diode, 1S2075K	DX-1118	DDAY063001
D-12	Diode, 1S2075K	DX-1118	DDAY063001
D-13	Diode, MC-301	DX-0985	DDAY090001
D-14	Diode, MC-301	DX-0985	DDAY090001
D-15	Diode, 1S2075K	DX-1118	DDAY063001
D-16	Diode, 1S2075K	DX-1118	DDAY063001
D-17	Diode, 1S2075K	DX-1118	DDAY063001
D-18	Diode, 1S2075K	DX-1118	DDAY063001
D-19	Diode, 1S2075K	DX-1118	DDAY063001
D-20	Diode, 1S2075K	DX-1118	DDAY063001
D-21	Diode, 1N60	DX-0161	DDAY063001
D-22	Diode, 1N60	DX-0161	DDAY001004
D-23	Diode, 1S2075K	DX-1118	DDAY063001
D-25	Diode, 1S2075K	DX-1118	DDAY063001
D-26	Diode, 1S2075K	DX-1118	DDAY063001
D-27	Diode, 1S2075K	DX-1118	DDAY063001
D-28	Diode, 1S2075K	DX-1118	DDAY063001
D-29	Diode, 1S2075K	DX-1118	DDAY063001
D-30	Diode, 1S2075K	DX-1118	DDAY063001
D-31	Diode, 1S2075K	DX-1118	DDAY063001
D-32	Diode, 1S2075K	DX-1118	DDAY063001
D-33	Diode, 1S2075K	DX-1118	DDAY063001
D-34	Diode, 1S2075K	DX-1118	DDAY063001
D-35	Diode, 1S2075K	DX-1118	DDAY063001
D-36	Diode, 1S2075K	DX-1118	DDAY063001
D-37	Diode, Vari-Cap, 1S2687-D	DX-0749	DDAY067001
D-38	Diode, 1S2075K	DX-1118	DDAY063001
D-39	Diode, 1S2075K	DX-1118	DDAY063001
D-40	Diode, 1S2075K	DX-1118	DDAY063001
D-41	Diode, 1S2075K	DX-1118	DDAY063001
D-42	Diode, 1N60	DX-0161	DDAY001004
D-43	Diode, 1S2075K	DX-1118	DDAY063001
D-44	Diode, 1S2075K	DX-1118	DDAY063001
D-46	Diode, Varistor, MV-1Y	DX-0750	DDFY020001
D-47	Diode, Varistor, MV-13YH	DX-1275	DDFY021001
D-48	Diode, 1S2075K	DX-1118	DDAY063001
D-49	Diode, 1S2075K	DX-1118	DDAY063001
D-54	Diode, 1S2075K	DX-1118	DDAY063001
D-55	Diode, 1S2075K	DX-1118	DDAY063001
D-56	Diode, 1S2075K	DX-1118	DDAY063001
D-57	Diode, 1S2075K	DX-1118	DDAY063001
D-58	Diode, 1S2075K	DX-1118	DDAY063001
D-59	Diode, 1S2075K	DX-1118	DDAY063001
D-60	Diode, Zener, RD-20E-B1 20V	DX-1276	DDAY086012
D-62	Diode, 1S2075K	DX-1118	DDAY063001
D-65	Diode, 1S2075K	DX-1118	DDAY063001
D-68	Diode, 1S2075K	DX-1118	DDAY063001
D-70	Diode, 1S2075K	DX-1118	DDAY063001

REF. NO.	DESCRIPTION				RS. PART NO.	MFRS PART NO.
C-184	Capacitor, Electrolytic	0.47 μF	50V	Z		CELZ 814780
C-189	Capacitor, Ceramic	0.01 μF	50V	M YD	CF-1709	CKDZ 811036
C-190	Capacitor, Mylar	0.047 μF	50V	K		CQMZ814735
C-191	Capacitor, Electrolytic	47 μF	10V	Z		CELZ 114700
C-192	Capacitor, Ceramic	0.001 μF	50V	M YD	CF-1559	CKDZ 811025
C-193	Capacitor, Electrolytic	1 μF	50V	Z		CELZ 811090
C-195	Capacitor, Ceramic	47 μF	50V	K SL	CF-1366	CCGZ 814705
C-196	Capacitor, Ceramic	0.047 μF	50V	Z ZF		CKDZ 814730
C-197	Capacitor, Mylar	0.0047 μF	50V	K		CQMZ814725
C-204	Capacitor, Ceramic	0.0047 μF	50V	Z YF		CKGZ 814726
C-205	Capacitor, Ceramic	0.01 μF	50V	M YD	CF-1709	CKDZ 811036
C-206	Capacitor, Ceramic	0.022 μF	50V	Z YF	CF-2061	CKGZ 812230
C-207	Capacitor, Ceramic	0.1 μF	50V	Z ZF	CF-1805	CKCZ 811040
C-208	Capacitor, Ceramic	0.022 μF	50V	Z YF	CF-2061	CKGZ 812230
C-212	Capacitor, Ceramic	0.022 μF	50V	M YD		CKDZ 812230
C-214	Capacitor, Mylar	0.047 μF	50V	K		CQMZ814735
C-215	Capacitor, Electrolytic	47 μF	10V	Z		CELZ 114700
C-226	Capacitor, Ceramic	330 pF	50V	K SL	CF-1514	CCGZ 813315
C-227	Capacitor, Ceramic	330 pF	50V	K SL	CF-1514	CCGZ 813315
C-228	Capacitor, Mylar	0.1 μF	50V	K		CQMZ811045
C-232	Capacitor, Electrolytic	4.7 μF	25V	Z		CELZ 514790
C-233	Capacitor, Ceramic	330 pF	50V	M SL	CF-1514	CKDZ 813315
C-234	Capacitor, Ceramic	0.0047 μF	50V	M YD	CF-1679	CKDZ 814726
C-235	Capacitor, Ceramic	0.0047 μF	50V	M YD	CF-1679	CKDZ 814726
C-236	Capacitor, Ceramic	220 pF	50V	SL	CF-1490	CCGZ 812215
C-237	Capacitor, Ceramic	0.0047 μF	50V	M YD	CF-1679	CKDZ 814726
C-238	Capacitor, Ceramic	0.001 μF	50V	M YD	CF-1559	CKDZ 811026
C-301	Capacitor, Mylar	0.047 μF	50V	K		CQMZ814735
C-302	Capacitor, Electrolytic	33 μF	25V	Z		CELZ 513300
C-303	Capacitor, Mylar	0.047 μF	50V	K		CQMZ814735
C-304	Capacitor, Electrolytic	3300 μF	35V	Z		CCZY 046001
C-305	Capacitor, Ceramic	0.01 μF	50V	YD	CF-1709	CKDZ 811036
C-306	Capacitor, Ceramic	0.01 μF	50V	YD	CF-1709	CKDZ 811036
C-307	Capacitor, Mylar	0.047 μF	50V	K		CQMZ814735
C-308	Capacitor, Ceramic	0.01 μF	50V	M YD	CF-1709	CKDZ 811036
C-309	Capacitor, Mylar	0.047 μF	50V	K		CQMZ814735
C-401	Capacitor, Ceramic	0.0047 μF	50V	M YD	CF-1679	CKDZ 814726
C-402	Capacitor, Ceramic	0.0047 μF	50V	M YD	CF-1679	CKDZ 814726
C-403	Capacitor, Ceramic	0.001 μF	50V	M YD	CF-1559	CKDZ 811026
C-404	Capacitor, Ceramic	0.001 μF	50V	M YD	CF-1559	CKDZ 811026
C-405	Capacitor, Ceramic	0.001 μF	50V	M YD	CF-1559	CKDZ 811026
C-406	Capacitor, Ceramic	0.001 μF	50V	M YD	CF-1559	CKDZ 811026
C-407	Capacitor, Ceramic	0.001 μF	50V	M YD	CF-1559	CKDZ 811026
C-408	Capacitor, Ceramic	0.001 μF	50V	M YD	CF-1559	CKDZ 811026
C-409	Capacitor, Ceramic	0.001 μF	50V	M YD	CF-1559	CKDZ 811026
C-410	Capacitor, Ceramic	0.001 μF	50V	M YD	CF-1559	CKDZ 811026
C-411	Capacitor, Ceramic	0.001 μF	50V	M YD	CF-1559	CKDZ 811026
C-415	Capacitor, Ceramic	0.047 μF	50V	Z ZF		CKCZ 814730
C-416	Capacitor, Ceramic	0.047 μF	50V	Z ZF		CKCZ 814730
C-417	Capacitor, Ceramic	0.001 μF	50V	M YD	CF-1559	CKDZ 811026
C-419	Capacitor, Ceramic	0.0047 μF	50V	M YD	CF-1679	CKDZ 814726
C-420	Capacitor, Ceramic	0.0047 μF	50V	YD	CF-1679	CKDZ 814726
C-421	Capacitor, Ceramic	0.0047 μF	50V	YD	CF-1679	CKDZ 814726
C-422	Capacitor, Ceramic	4.7 μF	50V	Z		CELZ 814790
CC-1	Compound Parts	0.01 μF	HA-003		C-0793	HHAY003001
CT-1	Capacitor, Trimmer	CV-028	20 pF		C-0790	CCVY028004
CT-2	Capacitor, Trimmer	CV-028	20 pF		C-0790	CCVY028004
CT-3	Capacitor, Trimmer	CV-028	20 pF		C-0790	CCVY028004

The second code indicates variation of capacitance against temperature; **YA** = ±5%, **YB** = ±10%, **YD** = +20 +20 -30%, **YE** = +20 -50%, **YF** = +30 -80%, (-20 ~ +85°C), **ZF** = +30 -80% (-10 ~ +70°C), **CH** = 0±60ppm/°C, **RH** = -220ppm/°C±60ppm/°C, **TH** = -4700ppm/°C, **SL** = +350ppm°/C ~ -1000ppm/ C, **UJ** = -750ppm°/C±120ppm/°C

REF. NO.	DESCRIPTION				RS. PART NO.	MFRS PART NO.
C-122	Capacitor, Ceramic	0.01 μF	50V	M YD	CF-1709	CKDZ 811036
C-123	Capacitor, Ceramic	0.01 μF	50V	M YD	CF-1709	CKDZ 811036
C-124	Capaciror, Ceramic	0.01 μF	50V	M YD	CF-1709	CKDZ 811036
C-125	Capacitor, Ceramic	0.01 μF	50V	M YD	CF-1709	CKDZ 811036
C-126	Capacitor, Ceramic	10 pF	50V	D SL	CF-1177	CCGZ 811002
C-127	Capacitor, Ceramic	220 pF	50V	K SL	CF-1490	CCGZ 812215
C-128	Capacitor, Ceramic	470 pF	50V	K SL	CF-1519	CCGZ 814715
C-129	Capacitor, Ceramic	0.01 μF	50V	M YD	CF-1709	CKDZ 811036
C-130	Capacitor, Ceramic	0.01 μF	50V	M YD	CF-1709	CKDZ 811036
C-131	Capacitor, Ceramic	0.01 μF	50V	M YD	CF-1709	CKDZ 811036
C-133	Capacitor, Electrolytic	10 μF	16V	Z		CELZ 311000
C-134	Capacitor, Electrolytic	1000 μF	25V	Z		CELZ 511020
C-139	Capacitor, Ceramic	1 pF	50V	C SL	CF-1015	CCGZ 811091
C-140	Capacitor, Ceramic	10 pF	50V	D CH	CF-1141	CCCZ 811002
C-141	Capacitor, Electrolytic	2.2 μF	25V	Z		CELZ 512290
C-142	Capacitor, Electrolytic	0.47 μF	50V	Z		CELZ 814780
C-143	Capacitor, Ceramic	68 pF	50V	K SL	CF-1959	CCGZ 816805
C-144	Capacitor, Ceramic	39 pF	50V	K SL	CF-1816	CCGZ 813905
C-145	Capacitor, Ceramic	180 pF	50V	K SL	CF-1470	CCGZ 811815
C-146	Capacitor, Electrolytic	1 μF	50V	Z		CELZ 811090
C-147	Capacitor, Ceramic	1 pF	50V	C SL	CF-1015	CCGZ 811091
C-148	Capacitor, Ceramic	390 pF	50V	K SL	CF-1934	CCGZ 813915
C-149	Capacitor, Ceramic	330 pF	50V	K UJ	CF-1985	CCUZ 813315
C-150	Capacitor, Mylar	0.1 μF	50V	K		CQMZ811045
C-151	Capacitor, Ceramic	470 pF	50V	K SL	CF-1519	CCGZ 814715
C-152	Capacitor, Ceramic	0.0047 μF	50V	M YD	CF-1679	CKDZ 814726
C-153	Capacitor, Mylar	0.1 μF	50V	K		CQMZ811045
C-154	Capacitor, Ceramic	0.0047 μF	50V	M YD	CF-1679	CKDZ 814726
C-155	Capacitor, Ceramic	0.0047 μF	50V	M YD	CF-1679	CKDZ 814726
C-156	Capacitor, Ceramic	0.0047 μF	50V	M YD	CF-1679	CKDZ 814726
C-157	Capacitor, Ceramic	0.0047 μF	50V	M YD	CF-1679	CKDZ 814726
C-158	Capacitor, Ceramic	47 pF	50V	K CH	CF-1365	CCCZ 814705
C-159	Capacitor, Ceramic	330 pF	50V	K UJ	CF-1985	CCUZ 813315
C-160	Capacitor, Ceramic	2 pF	50V	C CJ	CF-2065	CCBZ 812091
C-161	Capacitor, Mylar	0.01 μF	50V	K		CQMZ811035
C-162	Capacitor, Electrolytic	1 μF	50V	Z		CELZ 811090
C-163	Capacitor, Ceramic	220 pF	50V	K SL	CF-1490	CCGZ 812215
C-164	Capacitor, Electrolytic	10 μF	25V	Z		CELZ 511000
C-165	Capacitor, Ceramic	0.001 μF	50V	M YD	CF-1559	CKDZ 811026
C-167	Capacitor, Ceramic	0.022 μF	50V	Z YF	CF-2061	CKGZ 812230
C-168	Capacitor, Mylar	0.047 μF	50V	K		CQMZ814735
C-169	Capacitor, Electrolytic	1 μF	50V	Z		CELZ 811090
C-170	Capacitor, Ceramic	100 pF	50V	K SL	CF-1425	CCGZ 811015
C-171	Capacitor, Ceramic	56 pF	50V	K SL	CF-1373	CCGZ 815605
C-172	Capacitor, Ceramic	0.001 μF	50V	M YD	CF-1559	CKDZ 811026
C-173	Capacitor, Ceramic	0.0047 μF	50V	M YD	CF-1679	CKDZ 814726
C-174	Capacitor, Ceramic	270 pF	50V	K SL		CCGZ 812715
C-175	Capacitor, Ceramic	47 pF	50V	K SL	CF-1315	CCGZ 814705
C-180	Capacitor, Electrolytic	22 μF	10V	Z		CELZ 112200
C-181	Capacitor, Ceramic	0.047 μF	50V	M YD		CKCZ 814730

REF. NO.	DESCRIPTION			RS. PART NO.	MFRS PART NO.
D-71	Diode,	1N4003		DX-0207	DDAY133001
D-74	Diode,	1S2075K		DX-1118	DDAY063001
D-75	Diode, Zener,	RD5.1EB-2	5V	.	DDAY086014
D-76	Diode,	1S2075K		DX-1118	DDAY063001
D-301	Diode, Zener,	RD6.2EB3		DX-1247	DDAY086020
D-303	Diode,	S5VB-10		DX-0751	DDAY066004
D-401	Diode, LED,	UR-202	Channel Display	DX-1274	DDAY113001
D-403	Diode, LED,	TLR-124		L-0963	DDAY100001
D-407	Diode,	1N4003		DX-0207	DDAY133001
FET					
FET-1	FET,	2SK19-BL		2SK19-BL	DDCY 001002
INTEGRATED CIRCUITS					
IC-1	IC,	UHIC-070		MX-3918	DDEY 133001
IC-2	IC,	MB8734		MX-3917	DDEY 173001
IC-3	IC,	AN612		MX-3916	DDEY 130001
IC-4	IC,	TA7222P		MX-3618	DDEY 146001
IC-5	IC,	MB3756		MX-3920	DDEY 131001
IC-6	IC,	SO42P		MX-3919	DDEY 132001
COILS					
L-1	Coil,	LA-038	7.8 MHz	CA-3414	LLAY 038001
L-2	Coil,	LA-179	7.8 MHz	CA-3751	LLAY 179001
L-3	Coil,	LA-255	7.8 MHz	CA-5089	LLAY 255001
L-4	Coil,	LA-263	7.8 MHz	CA-5081	LLAY 263001
L-5	Coil,	LA-262	7.8 MHz	CA-5082	LLAY 262001
L-6	Coil,	LA-257	7.8 MHz	CA-5087	LLAY 257001
L-7	Coil,	LA-258	7.8 MHz	CA-5086	LLAY 258001
L-8	Coil,	LA-259	27 MHz	CA-5085	LLAY 259001
L-9	Coil,	LA-260	27 MHz	CA-5084	LLAY 260001
L-10	Coil,	LA-261	27 MHz	CA-5083	LLAY 261001
L-11	Inductor, Molded	LZ-012	470 μH	C-0787	LLZY 012004
L-12	Inductor, Molded	LZ-012	100 μH	C-0786	LLZY 012001
L-13	Coil,	LA-216	35 MHz	CA-5095	LLAY 216001
L-14	Coil,	LA-195	34.9 MHz	CA-3750	LLAY 195001
L-15	Inductor, Molded	LZ-012	470 μH	C-0787	LLZY 012004
L-16	Inductor, Molded	LZ-012	470 μH	C-0787	LLZY 012004
L-17	Coil,	LA-217	10.7 MHz	CA-5094	LLAY 217001
L-18	Coil,	LA-256	33 MHz	CA-5088	LLAY 256001
L-19	Coil,	LA-217	10.7 MHz	CA-5094	LLAY 217001
L-20	Coil,	LA-218	10.7 MHz	CA-5093	LLAY 218001
L-21	Inductor, Molded	LZ-012	470 μH	C-0787	LLZY 012004
L-22	Inductor, Molded	LZ-012	470 μH	C-0787	LLZY 012004
L-23	Inductor, Molded	LZ-012	470 μH	C-0787	LLZY 012004
L-24	Inductor, Molded	LZ-012	470 μH	C-0787	LLZY 012004
L-25	Inductor, Molded	LZ-012	100 μH	C-0786	LLZY 012001
L-26	Coil,	LA-219	7.8 MHz	CA-5092	LLAY 219001
L-27	Coil,	LA-160	34.9 MHz	CA-5076	LLAY 160001
L-28	Coil,	LA-220	27 MHz	CA-5091	LLAY 220001
L-29	Coil,	LA-254	27 MHz	CA-5090	LLAY 254001
L-30	Coil,	LD-096		CA-5080	LLDY 096001
L-31	Coil,	LD-087	Z(Ω) = 43	CA-3838	LLDY 087001
L-32	Coil,	LD-101	Z(Ω) = 35	CA-5078	LLDY 101001
L-33	Coil,	LD-098	0.89 μH	CA-5079	LLDY 098001
L-34	Coil,	LD-087	Z(Ω) = 43	CA-3838	LLDY 087001
L-35	Coil,	LD-098	0.89 μH	CA-5079	LLDY 098001
L-36	Coil,	LC-019	0.37 μH	CA-3639	LLCY 109001

REF. NO.	DESCRIPTION			RS. PART NO.	MFRS PART NO.
L-37	Coil,	LE-051	0.4 μH	CA-3760	LLEY 051001
L-38	Coil,	LE-051	0.4 μH	CA-3760	LLEY 051001
L-39	Coil,	LC-019	0.37 μH	CA-3639	LLCY 019001
L-50	Coil,	LD-077	Z(Ω) = 40	CA-3754	LLDY 077001
L-51	Coil,	LD-077	Z(Ω) = 40	CA-3754	LLDY 077001
L-52	Coil,	LD-077	Z(Ω) = 40	CA-3754	LLDY 077001
L-53	Coil,	LD-087	Z(Ω) = 43	CA-3838	LLDY 087001
L-401	Coil,	LD-034		CA-5188	LLDY 034001
L-402	Coil,	LD-034		CA-5188	LLDY 034001
L-403	Coil,	LD-089	Z(Ω) = 85	CA-3878	LLDY 089001
L-404	Coil,	LD-077	Z(Ω) = 40	CA-3754	LLDY 077001
L-406	Coil,	LD-089		CA-3878	LLDY 089001
L-407	Coil,	LD-089		CA-3878	LLDY 089001
L-408	Coil,	LD-089		CA-3878	LLDY 089001
RESISTORS		**Tolerance Code**	**J = 5%** **K = 10%**		
R-1	Carbon Film Resistor	18K ohm	1/8W J		RUBZ 181834
R-2	Carbon Film Resistor	3.3K ohm	1/8W J		RUBZ 183324
R-3	Carbon Film Resistor	470 ohm	1/8W J		RUBZ 184714
R-4	Carbon Film Resistor	220 ohm	1/8W J		RUBZ 182214
R-5	Carbon Film Resistor	47K ohm	1/8W J		RUBZ 184734
R-6	Carbon Film Resisto.	2.7K ohm	1/8W J		RUBZ 182724
R-7	Carbon Film Resistor	330 ohm	1/8W J		RUBZ 183314
R-8	Carbon Film Resistor	68 ohm	1/8W J		RUBZ 186804
R-9	Carbon Film Resistor	100K ohm	1/8W J		RPBZ 181044
R-10	Carbon Film Resistor	470K ohm	1/8W J		RUBZ 184744
R-11	Carbon Film Resistor	10K ohm	1/8W J		RUBZ 181034
R-12	Carbon Film Resistor	10K ohm	1/8W J		RUBZ 181034
R-13	Carbon Film Resistor	10K ohm	1/8W J		RUBZ 181034
R-14	Carbon Film Resistor	330 ohm	1/8W J		RUBZ 183314
R-15	Carbon Film Resistor	10K ohm	1/8W J		RUBZ 181034
R-16	Carbon Film Resistor	3.3K ohm	1/8W J		RUBZ 183324
R-17	Carbon Film Resistor	1.8K ohm	1/8W J		RPBZ 181824
R-18	Carbon Film Resistor	3.3K ohm	1/8W J		RUBZ 183324
R-19	Carbon Film Resistor	470 ohm	1/8W J		RPBZ 184714
R-20	Carbon Film Resistor	4.7K ohm	1/8W J		RUBZ 184724
R-21	Carbon Film Resistor	68 ohm	1/8W J		RUBZ 186804
R-22	Carbon Film Resistor	470K ohm	1/8W J		RUBZ 184744
R-23	Carbon Film Resistor	100 ohm	1/8W J		RUBZ 181014
R-24	Carbon Film Resistor	10K ohm	1/8W J		RUBZ 181034
R-25	Carbon Film Resistor	3.3K ohm	1/8W J		RUBZ 183324
R-26	Carbon Film Resistor	680 ohm	1/8W J		RUBZ 186814
R-27	Carbon Film Resistor	47K ohm	1/8W J		RPBZ 184734
R-28	Carbon Film Resistor	47K ohm	1/8W J		RUBZ 184734
R-29	Carbon Film Resistor	10K ohm	1/8W J		RUBZ 181034
R-30	Carbon Film Resistor	1K ohm	1/8W J		RUBZ 181024
R-31	Carbon Film Resistor	3.3K ohm	1/8W J		RUBZ 183324
R-32	Carbon Film Resistor	1K ohm	1/8W J		RUBZ 181024
R-33	Carbon Film Resistor	1K ohm	1/8W J		RPBZ 181024
R-34	Carbon Film Resistor	47K ohm	1/8W J		RUBZ 184734
R-35	Carbon Film Resistor	1K ohm	1/8W J		RUBZ 181024
R-36	Carbon Film Resistor	2.2K ohm	1/8W J		RUBZ 182224
R-37	Carbon Film Resistor	4.7K ohm	1/8W J		RUBZ 184724
R-38	Carbon Film Resistor	3.9K ohm	1/8W J		RUBZ 183924
R-39	Carbon Film Resistor	1K ohm	1/8W J		RUBZ 181024

REF. NO.	DESCRIPTION	RS. PART NO.	MFRS PART NO.
R-40	Carbon Film Resistor 10K ohm 1/8W J		RUBZ181034
R-41	Carbon Film Resistor 180K ohm 1/8W J		RUBZ181844
R-42	Carbon Film Resistor 100 ohm 1/8W J		RUBZ181014
R-43	Carbon Film Resistor 100 ohm 1/8W J		RUBZ181014
R-44	Carbon Film Resistor 10K ohm 1/8W J		RUBZ181034
R-45	Carbon Film Resistor 150K ohm 1/8W J		RUBZ181544
R-46	Carbon Film Resistor 100 ohm 1/8W J		RUBZ181014
R-47	Carbon Film Resistor 1.5K ohm 1/8W J		RPBZ 181524
R-48	Carbon Film Resistor 1.5K ohm 1/8W J		RUBZ181524
R-49	Carbon Film Resistor 1.5K ohm 1/8W J		RPBZ 181524
R-50	Carbon Film Resistor 3.3K ohm 1/8W J		RUBZ183324
R-52	Carbon Film Resistor 10K ohm 1/8W J		RPBZ 181034
R-53	Carbon Film Resistor 220 ohm 1/8W J		RUBZ182214
R-54	Carbon Film Resistor 470 ohm 1/8W J		RUBZ184714
R-55	Carbon Film Resistor 3.3 ohm 1/8W J		RUBZ183394
R-56	Carbon Film Resistor 220 ohm 1/8W J		RUBZ182214
R-57	Carbon Film Resistor 10K ohm 1/8W J		RPBZ 181034
R-58	Carbon Film Resistor 3.3K ohm 1/8W J		RUBZ183324
R-59	Carbon Film Resistor 47K ohm 1/8W J		RUBZ184734
R-60	Carbon Film Resistor 1.5K ohm 1/8W J		RUBZ181524
R-61	Carbon Film Resistor 150 ohm 1/8W J		RUBZ181514
R-62	Carbon Film Resistor 68 ohm 1/8W J		RUBZ186804
R-63	Carbon Film Resistor 100K ohm 1/8W J		RUBZ181044
R-64	Carbon Film Resistor 47K ohm 1/8W J		RUBZ184734
R-65	Carbon Film Resistor 100K ohm 1/8W J		RUBZ181044
R-66	Carbon Film Resistor 47K ohm 1/8W J		RUBZ184734
R-67	Carbon Film Resistor 390K ohm 1/8W J		RPBZ 183944
R-68	Carbon Film Resistor 1K ohm 1/8W J		RUBZ181024
R-70	Carbon Film Resistor 1.5K ohm 1/8W J		RPBZ 181524
R-71	Carbon Film Resistor 1.5K ohm 1/8W J		RUBZ181524
R-72	Carbon Film Resistor 2.7K ohm 1/8W J		RPBZ 182724
R-73	Carbon Film Resistor 33K ohm 1/8W J		RUBZ183334
R-74	Carbon Film Resistor 12K ohm 1/8W J		RUBZ181234
R-75	Carbon Film Resistor 33K ohm 1/8W J		RUBZ183334
R-76	Carbon Film Resistor 6.8K ohm 1/8W J		RUBZ186824
R-77	Carbon Film Resistor 2.2K ohm 1/8W J		RUBZ182224
R-78	Carbon Film Resistor 2.2K ohm 1/8W J		RUBZ182224
R-79	Carbon Film Resistor 2.2K ohm 1/8W J		RUBZ182224
R-80	Carbon Film Resistor 1K ohm 1/8W J		RUBZ181024
R-81	Carbon Film Resistor 100 ohm 1/8W J		RPBZ 181014
R-83	Carbon Film Resistor 100 ohm 1/8W J		RUBZ181014
R-84	Carbon Film Resistor 270K ohm 1/8W J		RUBZ182744
R-85	Carbon Film Resistor 560 ohm 1/8W J		RUBZ185614
R-86	Carbon Film Resistor 10K ohm 1/8W J		RPBZ 181034
R-87	Carbon Film Resistor 39K ohm 1/8W J		RUBZ183934
R-88	Carbon Film Resistor 1K ohm 1/8W J		RUBZ181024
R-89	Carbon Film Resistor 3.3K ohm 1/8W J		RUBZ183324
R-90	Carbon Film Resistor 15K ohm 1/8W J		RUBZ181534
R-91	Carbon Film Resistor 680 ohm 1/8W J		RUBZ186814
R-92	Carbon Film Resistor 39K ohm 1/8W J		RUBZ183934
R-93	Carbon Film Resistor 390 ohm 1/8W J		RUBZ183914
R-95	Carbon Film Resistor 68K ohm 1/8W J		RUBZ186834
R-96	Carbon Film Resistor 100K ohm 1/8W J		RUBZ181044
R-97	Carbon Film Resistor 3.3K ohm 1/8W J		RUBZ183324
R-98	Carbon Film Resistor 3.3K ohm 1/8W J		RUBZ183324
R-99	Carbon Film Resistor 10K ohm 1/8W J		RUBZ181034
R-100	Carbon Film Resistor 33K ohm 1/8W J		RUBZ183334
R-101	Carbon Film Resistor 2.2M ohm 1/8W J		RPBZ 182254
R-102	Carbon Film Resistor 15K ohm 1/8W J		RUBZ181534
R-103	Carbon Film Resistor 680K ohm 1/8W J		RUBZ186844

REF. NO.	DESCRIPTION				RS. PART NO.	MFRS PART NO.
R-104	Carbon Film Resistor	8.2K ohm	1/8W	J		RUBZ 188224
R-105	Carbon Film Resistor	10K ohm	1/8W	J		RUBZ 181034
R-106	Carbon Film Resistor	220 ohm	1/8W	J		RUBZ 182214
R-107	Carbon Film Resistor	1K ohm	1/8W	J		RUBZ 181024
R-108	Carbon Film Resistor	22K ohm	1/8W	J		RUBZ 182234
R-109	Carbon Film Resistor	10K ohm	1/8W	J		RUBZ 181034
R-110	Carbon Film Resistor	2.2K ohm	1/8W	J		RUBZ 182224
R-111	Carbon Film Resistor	4.7K ohm	1/8W	J		RUBZ 184724
R-112	Metal Film Resistor	100 ohm	1W	K		RSJZ 101015
R-113	Carbon Film Resistor	1K ohm	1/8W	J		RPBZ 181024
R-114	Carbon Film Resistor	1K ohm	1/8W	J		RUBZ 181024
R-115	Carbon Film Resistor	22K ohm	1/8W	J		RUBZ 182234
R-116	Carbon Film Resistor	180K ohm	1/8W	J		RUBZ 181844
R-117	Carbon Film Resistor	3.3K ohm	1/8W	J		RUBZ 183324
R-118	Carbon Film Resistor	100 ohm	1/8W	J		RUBZ 181014
R-119	Carbon Film Resistor	68 ohm	1/8W	J		RUBZ 186804
R-120	Carbon Film Resistor	3.3K ohm	1/8W	J		RUBZ 183324
R-121	Carbon Film Resistor	1K ohm	1/8W	J		RUBZ 181024
R-122	Carbon Film Resistor	4.7K ohm	1/8W	J		RPBZ 184724
R-123	Carbon Film Resistor	4.7K ohm	1/8W	J		RUBZ 184724
R-124	Carbon Film Resistor	3.3K ohm	1/8W	J		RUBZ 183324
R-125	Carbon Film Resistor	1.5K ohm	1/8W	J		RUBZ 181524
R-126	Carbon Film Resistor	1K ohm	1/8W	J		RUBZ 181024
R-127	Carbon Film Resistor	100 ohm	1/8W	J		RUBZ 181014
R-128	Carbon Film Resistor	1K ohm	1/8W	J		RUBZ 181024
R-129	Carbon Film Resistor	220 ohm	1/8W	J		RUBZ 182214
R-130	Carbon Film Resistor	10K ohm	1/8W	J		RUBZ 181034
R-131	Carbon Film Resistor	2.2K ohm	1/8W	J		RUBZ 182224
R-132	Carbon Film Resistor	1K ohm	1/8W	J		RUBZ 181024
R-133	Carbon Film Resistor	10K ohm	1/8W	J		RUBZ 181034
R-134	Carbon Film Resistor	10K ohm	1/8W	J		RUBZ 181034
R-135	Carbon Film Resistor	1.8K ohm	1/8W	J		RUBZ 181824
R-136	Carbon Film Resistor	5.6K ohm	1/8W	J		RUBZ 185624
R-137	Carbon Film Resistor	10K ohm	1/8W	J		RUBZ 181034
R-138	Carbon Film Resistor	1 ohm	1/8W	J		RUBZ 181094
R-140	Carbon Film Resistor	10K ohm	1/8W	J		RUBZ 181034
R-141	Carbon Film Resistor	8.2K ohm	1/8W	J		RUBZ 188224
R-142	Carbon Film Resistor	18K ohm	1/8W	J		RUBZ 181834
R-143	Carbon Film Resistor	10K ohm	1/8W	J		RUBZ 181034
R-144	Carbon Film Resistor	1K ohm	1/8W	J		RUBZ 181024
R-145	Carbon Film Resistor	1K ohm	1/8W	J		RUBZ 181024
R-146	Carbon Film Resistor	1.5K ohm	1/8W	J		RPBZ 181524
R-147	Carbon Film Resistor	22K ohm	1/8W	J		RUBZ 182234
R-148	Carbon Film Resistor	10K ohm	1/2W	J		RPBZ 121034
R-149	Carbon Film Resistor	100 ohm	1/8W	J		RUBZ 181014
R-150	Carbon Film Resistor	270 ohm	1/4W	J		RPBZ 182714
R-151	Carbon Film Resistor	330 ohm	1/8W	J		RUBZ 183314
R-152	Carbon Film Resistor	220 ohm	1/8W	J		RUBZ 182214
R-153	Carbon Film Resistor	12 ohm	1/8W	J		RUBZ 181204
R-154	Carbon Film Resistor	1.5K ohm	1/8W	J		RUBZ 181524
R-155	Carbon Film Resistor	330 ohm	1/8W	J		RUBZ 183314
R-156	Carbon Film Resistor	100 ohm	1/8W	J		RUBZ 181014
R-157	Carbon Film Resistor	100 ohm	1/8W	J		RPBZ 181014
R-158	Carbon Film Resistor	100 ohm	1/8W	J		RUBZ 181014
R-159	Carbon Film Resistor	100 ohm	1/8W	J		RUBZ 181014
R-160	Carbon Film Resistor	1K ohm	1/8W	J		RUBZ 181024
R-162	Carbon Film Resistor	47 ohm	1/8W	J		RUBZ 184704
R-163	Carbon Film Resistor	10 ohm	1/8W	J		RUBZ 181004
R-169	Carbon Film Resistor	2.2K ohm	1/8W	J		RUBZ 182224
R-176	Carbon Film Resistor	560 ohm	1/8W	J		RUBZ 185614

REF. NO.	DESCRIPTION				RS. PART NO.	MFRS PART NO.
R-177	Carbon Film Resistor	680K ohm	1/8W	J		RUBZ 186844
R-178	Carbon Film Resistor	220K ohm	1/8W	J		RUBZ 182244
R-179	Carbon Film Resistor	330 ohm	1/8W	J		RUBZ 183314
R-182	Carbon Film Resistor	330 ohm	1/8W	J		RUBZ 183314
R-183	Carbon Film Resistor	1K ohm	1/8W	J		RPBZ 181024
R-184	Carbon Film Resistor	150 ohm	1/8W	J		RPBZ 181514
R-185	Metal Film Resistor	220 ohm	1W	K		RSJZ 102215
R-186	Carbon Film Resistor	1K ohm	1/8W	J		RUBZ 181024
R-188	Carbon Film Resistor	5.6K ohm	1/8W	J		RPBZ 185624
R-189	Carbon Film Resistor	3.3K ohm	1/8W	J		RUBZ 183324
R-192	Carbon Film Resistor	2.7K ohm	1/8W	J		RUBZ 182724
R-193	Carbon Film Resistor	10K ohm	1/8W	J		RPBZ 181034
R-194	Carbon Film Resistor	560 ohm	1/8W	J		RUBZ 185614
R-197	Carbon Film Resistor	47K ohm	1/8W	J		RUBZ 184734
R-198	Carbon Film Resistor	100K ohm	1/8W	J		RUBZ 181044
R-199	Carbon Film Resistor	3.9K ohm	1/8W	J		RUBZ 183924
R-200	Carbon Film Resistor	1K ohm	1/8W	J		RUBZ 181024
R-201	Carbon Film Resistor	3.3K ohm	1/8W	J		RUBZ 183324
R-202	Carbon Film Resistor	10K ohm	1/8W	J		RUBZ 181034
R-203	Carbon Film Resistor	6.8K ohm	1/8W	J		RUBZ 181624
R-204	Carbon Film Resistor	560 ohm	1/8W	J		RUBZ 185614
R-205	Carbon Film Resistor	100 ohm	1/8W	J		RUBZ 181014
R-216	Carbon Film Resistor	2.2K ohm	1/8W	J		RUBZ 182224
R-217	Carbon Film Resistor	270 ohm	1/8W	J		RUBZ 182714
R-218	Carbon Film Resistor	1.5M ohm	1/8W	J		RPBZ 181554
R-220	Carbon Film Resistor	4.7K ohm	1/8W	J		RPBZ 184724
R-221	Carbon Film Resistor	1K ohm	1/8W	J		RPBZ 181024
R-222	Carbon Film Resistor	1K ohm	1/8W	J		RPBZ 181024
R-224	Carbon Film Resistor	10K ohm	1/2W	J		RPBZ 121034
	(for CANADA ONLY)					
R-223	Carbon Film Resistor	56 ohm	1/2W	J		RPBZ 125604
R-225	Carbon Film Resistor	3.3K ohm	1/8W	J		RPBZ 183324
R-301	Carbon Film Resistor	330 ohm	1/8W	J		RUBZ 183314
R-302	Carbon Film Resistor	330 ohm	1/8W	J		RUBZ 183314
R-303	Carbon Film Resistor	1K ohm	1/8W	J		RUBZ 181024
R-304	Carbon Film Resistor	3.3K ohm	1/2W	J		RUBZ 123324
R-401	Carbon Film Resistor	1.8K ohm	1/8W	J		RUBZ 181824
R-402	Carbon Film Resistor	1.8K ohm	1/8W	J		RUBZ 181824
R-403	Carbon Film Resistor	1K ohm	1/4W	J		RPBZ 121024
R-404	Carbon Film Resistor	1.8K ohm	1/8W	J		RUBZ 181824
R-405	Carbon Film Resistor	1.8K ohm	1/8W	J		RUBZ 181824
R-406	Carbon Film Resistor	1.8K ohm	1/8W	J		RUBZ 181824
R-407	Carbon Film Resistor	1.8K ohm	1/8W	J		RUBZ 181824
R-408	Carbon Film Resistor	1.8K ohm	1/8W	J		RUBZ 181824
R-409	Carbon Film Resistor	1.8K ohm	1/8W	J		RUBZ 181824
R-410	Carbon Film Resistor	1.8K ohm	1/8W	J		RUBZ 181824
R-411	Carbon Film Resistor	1.8K ohm	1/8W	J		RUBZ 181824
R-412	Carbon Film Resistor	1.8K ohm	1/8W	J		RUBZ 181824
R-413	Carbon Film Resistor	1.8K ohm	1/8W	J		RUBZ 181824
R-415	Carbon Film Resistor	5.6K ohm	1/8W	J		RUBZ 185624
R-417	Carbon Film Resistor	1K ohm	1/8W	J		RUBZ 181024
R-419	Carbon Film Resistor	1.5K ohm	1/8W	J		RUBZ 181024
R-423	Carbon Film Resistor	10K ohm	1/2W	J for USA		RPBZ 121034
	Carbon Film Resistor	1.5M ohm	1/2W	J for Canada		RPBZ 121554
R-424	Carbon Film Resistor	2.2M ohm	1/2W	J		RPBZ 122254
R-425	Carbon Film Resistor	10K ohm	1/2W	J		RUBZ 181034
R-426	Cement	10 ohm	5W	K		RXJZ 501005
R-427	Carbon Film Resistor	180 ohm	1/2W	J		RPBZ 121814
R-428	Carbon Film Resistor	180 ohm	1/2W	J		RPBZ 121814
R-430	Carbon Film Resistor	10K ohm	1/8W	J		RUBZ 181034
R-433	Metal Film Resistor	10 ohm	3W	K		RSJZ 301005

REF. NO.	DESCRIPTION	RS. PART NO.	MFRS PART NO.
R-434	Metal Film Resistor 3.3 ohm 3W K		RSJZ 303395
R-435	Carbon Film Resistor 6.8K ohm 1/8W J		RUBZ 186824
SWITCHES			
S-401	Switch, Rotary (CH.) SR-207	S-1345	SSRY 207001
S-402	Switch, Rotary (Power) RV-308 for USA		RPVY 308001
	RV-374 for CANADA		RRVY 374001
S-403	Switch, Rotary (Mod) SR-234	S-1338	SSRY 234001
S-404	Switch, Push (PA/CB) SW-197	S-7443	SSWY 197001
S-405	Switch, Push (NB/ANL) SW-197	S-7443	SSWY 197001
S-409	Switch, Slide (DC/AC) SW-193	S-2567	SSWY 193001
S-411	Switch, Push (CH-9) SW-197	S-7443	SSWY 197001
TRANSFORMERS			
T-1	Transformer, AF choke TF-151	CB-2458	TTFY 151001
T-401	Transformer, Power TF-145 (for USA)	TA-0773	TTFY 145001
	TF-163 for CANADA		TTFY 163001
T-402	Transformer, Output TF-192	TD-0192	TTFY 192001
TRANSISTORS			
TR-1	Transistor 2SC710-C	2SC710-C	DDBY 209001
TR-2	Transistor 2SC710-C	2SC710-C	DDBY 209001
TR-3	Transistor 2SC1730-L	2SC1730-L	DDBY 269001
TR-4	Transistor 2SC711-E	2SC711-E	DDBY 210002
TR-5	Transistor 2SC711-E	2SC711-E	DDBY 210002
TR-6	Transistor 2SC710-C	2SC710-C	DDBY 209001
TR-7	Transistor 2SA628-F	2SA628-F	DDBY 019001
TR-8	Transistor 2SC1730-L	2SC1730-L	DDBY 269001
TR-9	Transistor 2SC1674-L	2SC1674-L	DDBY 295002
TR-10	Transistor 2SC710-C	2SC710-C	DDBY 209001
TR-11	Transistor 2SC711-E	2SC711-E	DDBY 210002
TR-12	Transistor 2SC710-E	2SC710-C	DDBY 209001
TR-13	Transistor 2SC711-E	2SC711-E	DDBY 210002
TR-14	Transistor 2SA628-F	2SA628-F	DDBY 019001
TR-15	Transistor 2SC711-E	2SC711-E	DDBY 210002
TR-16	Transistor 2SC1730-L	2SC1730-L	DDBY 269001
TR-17	Transistor 2SC763-C	2SC763-C	DDBY 216001
TR-18	Transistor 2SC763-C	2SC763-C	DDBY 216001
TR-19	Transistor 2SC710-C	2SC710-C	DDBY 209001
TR-20	Transistor 2SC711-E	2SC711-E	DDBY 210002
TR-21	Transistor 2SC710-C	2SC710-C	DDBY 209001
TR-22	Transistor 2SC710-C	2SC710-C	DDBY 209001
TR-23	Transistor 2SC710-C	2SC710-C	DDBY 209001
TR-24	Transistor 2SC710-C	2SC710-C	DDBY 209001
TR-25	Transistor 2SC710-C	2SC710-C	DDBY 209001
TR-27	Transistor 2SC711-E	2SC711-E	DDBY 210002
TR-28	Transistor 2SC945A-Q	2SC945A-Q	DDBY 224003
TR-29	Transistor 2SC1312-F	2SC1312-F	DDBY 317001
TR-30	Transistor 2SA628-F	2SA628-F	DDBY 019001
TR-31	Transistor 2SA628-F	2SA628-F	DDBY 019001
TR-32	Transistor 2SC711-E	2SC711-E	DDBY 210002
TR-33	Transistor 2SC711-E	2SC711-E	DDBY 210002
TR-34	Transistor 2SC1419-C	2SC1419-C	DDBY 278002
TR-35	Transistor 2SC711-E	2SC711-E	DDBY 210002
TR-36	Transistor 2SC1312-F	2SC1312-F	DDBY 317001
TR-37	Transistor 2SC711-E	2SC711-E	DDBY 210002
TR-38	Transistor 2SC1973	2SC1973	DDBY 272001
TR-39	Transistor 2SC1306	2SC1306	DDBY 230001

REF. NO.	DESCRIPTION	RS. PART NO.	MFRS PART NO.
TR-40	Transistor 2SC496-O	2SC496-O	DDBY 246001
TR-41	Transistor 2SC1969-B	2SC1969-B	DDBY 307001
TR-42	Transistor 2SC710-C	2SC710-C	DDBY 209001
TR-45	Transistor 2SA628-F	2SA628-F	DDBY 019001
TR-46	Transistor 2SC711-E	2SC711-E	DDBY 210002
TR-49	Transistor 2SC711-E	2SC711-E	DDBY 210002
TR-301	Transistor 2SC711-E	2SC711-E	DDBY 210002
TR-302	Transistor 2SC1419-C	2SC1419-C	DDBY 278002
TR-303	Transistor 2SD588-R	2SD588-R	DDBY 415001
TR-402	Transistor 2SC711-E	2SC711-E	DDBY 210002
SEMI-FIXED & VARIABLE RESISTORS			
VR-1	Semi-fixed Resistor, RV-182 10K ohm B	P-6556	RRVY 182005
VR-3	Semi-fixed Resistor, RV-182 3K ohm B	P-6558	RRVY 182012
VR-5	Semi-fixed Resistor, RV-182 10K ohm B	P-6556	RRVY 182005
VR-6	Semi-fixed Resistor, RV-182 5K ohm B	P-6557	RRVY 182004
VR-7	Semi-fixed Resistor, RV-182 10K ohm B	P-6556	RRVY 182005
VR-8	Semi-fixed Resistor, RV-182 500 ohm B	P-6560	RRVY 182001
VR-9	Semi-fixed Resistor, RV-182 5K ohm B	P-6557	RRVY 182004
VR-10	Semi-fixed Resistor, RV-182 100K ohm B	P-6555	RRVY 182008
VR-12	Semi-fixed Resistor, RV-182 30K ohm B	P-6589	RRVY 182013
VR-401	Variable Resistor, RV-204 100K ohm B (Squelch)	P-2111	RRVY 204001
VR-402	Variable Resistor, RV-203 20K ohm B (Clarifier)	P-1980	RRVY 203001
VR-403	Variable Resistor, RV-308 (for USA) 10K ohm A (S-402 Power Vol.)	P-2112	RRVY 308001
	Variable Resistor, RV-374 (for CANADA)		RRVY 374001
VR-404	Variable Resistor, RV-316 10K ohm B (RF Gain)	P-2113	RRVY 316001
CRYSTALS			
X-1	X'tal, QX-077 10.24 MHz	MX-2391	QQXY 077001
X-2	X'tal, QX-084 7.8025 MHz	MX-2392	QQXY 084001
X-3	X'tal, QX-083 7.7975 MHz	MX-2393	QQXY 083001
X-4	X'tal, QX-086 11.3258 MHz	MX-2394	QQXY 086001
MISCELLANEOUS			
	PC Board Ass'y (MAIN)	X-8311	529D-PC-385
	PC Board Ass'y (CH SW)	X-8329	529D-PC-447
	PC Board Ass'y (LED)	X-8330	529D-PC-384
	PC Board Ass'y (Mic Jack)	X-8331	529D-PC-647
	PC Board Ass'y (PWR Supply)	X-8332	529D-PC-570
	PC Board Ass'y (SP Jack)	X-8333	529D-PC-401
	PC Board Ass'y (Push Switch)	X-8334	529D-PC-466
	PC Board Ass'y (Phone Jack)	X-8335	529D-PC-569
	PC Board Ass'y (Filter)	X-8336	529D-PC-586
SP-401	Speaker SP-030	S-4605	ASPY 030001
M-401	Meter MT-195	M-0433	ZMTY 195001
J-401	Jack, PA SP JK-010	J-0643	JJKY 010001
J-402	Jack, EXT SP JK-010	J-0643	JJKY 010001
J-403	Receptacle, DC Power JK-052	J-0819	JJKY 052001
J-404	Jack, Microphone JK-125	J-1042	JJKY 125001
J-405	Jack, Antenna JK-035	J-6421	JJKY 035001
J-406	Jack, Phone JK-005	J-1074	JJKY 005002
TP-7	Terminal, Check Point TP-027	J-4502	JJPY 027001
TP-8	Terminal, Check Point TP-027	J-4502	JJPY 027001
	Terminal Strip TP-012	HB-6201	JJPY 012002
	Holder, Fuse FH-002	F-1112	ZFHY 002001
F-401	Fuse 4A FS-002	HF-1157	ZFSY 002006
F-402	Fuse 5A FS-002	HF-0068	ZFSY 002004

REF. NO.	DESCRIPTION		RS. PART NO.	MFRS PART NO.
PL-401	Pilot Lamp	PL-069	L-1084	VPLY 069003
PL-402	Pilot Lamp	PL-068	L-1083	VPLY 068001
	Insulation sheet	YD-003 (005)		ZYDY 003005
	Bushing, Transistor	YD-004 (004)		ZYDY 004004
	Insulation sheet	YD-033	HB-8687	ZYDY 033001
	Insulation sheet	YD-039	HB-7837	ZYDY 039001
	Insulation sheet	YD-040	HB-8286	ZYDY 040001
	Push Button	YY-010	K-2561	ZYYY 010001
	Wire connector	YY-008		ZYYY 008001
	Clamper, Wire	YY-023		ZYYY 023001
	Bushing, Snap-in	YY-024		ZYYY 024001
	Bushing, Snap-in	YY-025		ZYYY 025001
	Insulation sheet, Almina	YY-027		ZYYY 027001
	Bushing, Tight Ceramic	YY-036		ZYYY 036001
	Clamper, Wire	YY-047		ZYYY 047001
	Clamper, Lead	YY-048		ZYYY 048001
	Clamper, Lead	YY-049		ZYYY 049001
	DC Power Cord	W-070376	W-2414	WZDZ 070376
	AC Power Cord	WZ-022 for USA		WWZY022001
		WZ-013 for CANADA		WWZY013001
FT-1	Crystal Filter	FL-065	C-0996	FFLY 065001
FT-2	Crystal Filter	FL-046	C-0794	FFLY 046001
	Microphone	MK-115	M-2303	AMKY115001

REF. NO.	DESCRIPTION			RS. PART NO.	MFRS. PART NO.
	Chassis	SPCC	1.0t ZMC-3		MDBP 106074
	Chassis, Front	SPCC	1.2t ZMC-3		MDBP 204031
	Holder, Jack	SPCC	1.2t ZMC-3	HB-9268	MDBP 404035
	Cover, Top		1.0t	Z-5147	MDBP 204033
	Holder, Bracket	SPCC	1.0t ZMC-3		MDBP 406107
	Panel, Rear, for USA	SPCC	1.0t ZMC-3	Z-5148	MDBP 208877
	for CANADA				MDBP 209420
	Holder, Meter	SPCC	1.0t ZMC-3	HB-9269	MDBP 404034
	Bracket, Front Panel (R)	SPCC	1.2t ZMC-3	HB-9270	MDBP 403944
	Bracket, Front Panel (L)	SPCC	1.2t ZMC-3	HB-9271	MDBP 403945
	Cover, Bottom	SPCC	1.0t ZMC-3	Z-5146	MDBP 204179
	Heat Sink, TX	AIP	2.0t	HH-0346	MDBP 206075
	Heat Sink, Power Supply	AIP	1.0t	HH-0347	MDBP 303969
	Heat Sink, Diode	AIP	2.0t	HH-0348	MDBP 408207
	Holder, Transformer	SPCC	1.6t ZMC-3	HB-9272	MDBP 400683
	Hanger, Microphone	SPCC	1.0t Ni-3	HB-8690	MDBP 402919
	Bracket, Speaker	SPCC	0.8t ZMC-3	HB-9273	MDBP 400048
	Mounting Bracket (R)	SPCC	1.6t ZMC-3	MB-0238	MDBP 401375
	Mounting Bracket (L)	SPCC	1.6t ZMC-3	MB-0239	MDBP 401376
	Metal Strip, (EXT. PA)	SPTE	0.35t	HB-9274	MDBP 404006
	Metal Strip, (3 Pin Connector)		0.8t	HB-9275	MDBP 408180
	Panel, Front	ABS		Z-3513	MDMP 104030
	Knob Channel	ABS		K-2565	MDMP 404036
	Knob	ABS	Cr-1	K-2564	MDMP 404038
	Poly-Bushing			HB-4077	MDMP 400085
	Optical Filter, Display				MDMP 404037
	Spacer	ABS		HB-6206	MDMP 404121
	Plate, Knob	AIP	0.4t		MDNP 404181
	Knob, Front Display	AIP	0.6t		MDNP 404180
	Nameplate, Control	AIP	0.5t		MDNP 304039
	Nameplate, Control		0.5t		MDNP 404040
	ID Plate, FCC for USA	AIP	1.0t		MDNP 408879
	ID Plate, DOC for CANADA				MDNP 409429
	Label, Production Date				MDLP 402854
	Label, Fuse Replacement for USA				MDLP 408880
	for CANADA				MDLP 409431
					MDLP 406988
	Label, Caution for USA				MDLP 406987
	for CANADA				
	Label, Caution, Bottom				MDLP 406987
	Label, Caution DC Cord				MDLP 409000
	Speaker Cloth				MDZP 404171
	Cushion				MDZP 404172
	Washer, Fiber			HD-8256	MDZP 403955
	Washer, Bakelite			HD-8251	MDZP 400086
	Washer, Rubber			HD-8221	MDZP 400638
	Wool-coated Paper, Wool Tack	10W x 150L		HB-6217	MDZP 403865
	Ground Paper			HB-6237	MDZP 404183
	Wool-coated Paper, Wool Tack	2S x 10 x 0.3t		HB-7377	MDZP 403306
	Washer, Felt		1.5t	HD-8476	MDZP 402223

REF. NO.	DESCRIPTION			RS. PART NO.	MFRS PART NO.
	Optical Shielding Cloth	0.3t			MDZP408881
	Screw, Pan Hd Plastic	M3 x 6		HD-2055	MZSS 123006
	Screw, Flat Hd	M3 x 6	Ni	HD-4019	MZSN 133006
	Screw, Bind Hd	M2.6 x 6	Ni	HD-3019	MZSN 192606
	Screw, Bind Hd	M2.6 x 10	Ni	HD-3056	MZSN 192610
	Screw, Bind Hd	M3 x 5	Ni	HD-3025	MZSN 193005
	Screw, Bind Hd	M3 x 8	BNi	HD-3028	MZSB 193008
	Screw, Bind Hd	M3 x 8	Ni	HD-3028	MZSN 193008
	Screw, Bind Hd	M3 x 12	Ni	HD-3030	MZSN 193012
	Screw, Bind Hd	M4 x 10	Ni	HD-3047	MZSN 194010
	Screw, Bind Hd	M5 x 8	BNi	HD-3050	MZSB 195008
	Tap Tight Screw, Bind Hd	3 x 6	ZMC	HD-1281	MZSZ 343006
	Tap Tight Screw, Bind Hd	3 x 8	ZMC	HD-1279	MZSZ 343008
	Tap Tight Screw, Bind Hd	3 x 12	ZMC	HD-3036	MZSZ 343012
	Tap Tight Screw, Bind Hd	3 x 14	ZMC	HD-3255	MZSZ 343014
	Tapping Screw, Pan Hd	ϕ3.5 x 8	ZMC	HD-2076	MZSZ 293508
	Bolt, Hex	M5 x 14	ZMC	HD-5037	MZSZ 405014
	Nut, Hex	M3	Ni	HD-7003	MZSN 430030
	Nut, Hex, Ni	M2.6	Ni	HD-7002	MZSN 430026
	Nut, Hex, Ni	M5	N	HD-7006	MZSN 430050
	Nut, Flange	M3	ZMC	HD-7080	MZSZ 480030
	Nut, Flange	M4	ZMC	HD-7084	MZSZ 480040
	Washer, Flat	ϕ5	Ni	HD-8006	MZSN 500050
	Washer, Spring	ϕ3	Ni	HD-8017	MZSN 510030
	Washer, Spring	ϕ5	Ni	HD-8020	MZSN 510050
	Washer, Lock	ϕ3.5	ZMC	HD-8018	MZSZ 530035
	Washer, Star	ϕ5	ZMC	HD-8249	MZSZ 540050
	Foot, ABS Black	ABS ϕ26 x 30H		F-0174	MZTT 010001
	Foot, ABS Black	ABS ϕ20 x 16H		F-0175	MZTT 010004
	Strain Relief for USA	HEYCO	SP-3P-4	HB-9280	MZTT 090005
	for CANADA				MZTT 090006
	Vinyl Bag	100 x 120 x 0.05			MZTT 111012
	Vinyl Bag	110 x 600 x 0.05			MZTT 111160
	Vinyl Bag	120 x 280 x 0.05			MZTT 111228
	Vinyl Bag	220 x 320 x 0.05			MZTT 112232
	Vinyl Bag				MZTT 133001
	Terminal, Lug, Solder	ϕ3		HB-4089	MZTT 150003
	Spring Plate, Knob				MZTT 200003
	Rivet, AL, ID Plate	AIP 3.2ℓ x 3.2			MZTT 213232
	Rivet, AL, Holder Bracket	ϕ3.2 x 5ℓ			MZTT 223250
	Washer, Rubber				MDZP401703
	Wool-Coated Paper	10 x 120 x 0.3			MDZP403304
	Push SW Knob (Assembled with S-404, 405, 411)				
	Screw, Bind Head Ni	4 x 8 (for CANADA)			MZSN 194008
	Terminal, Lug Solder				MZTT 150004

SPECIFICATIONS

GENERAL

Semiconductors:	41 transistors, 1 FET, 58 diodes, 6 ICs and 2 LEDs
Frequency Range:	26.965 MHz – 27.405 MHz (channels 1 through 40)
Antenna Impedance:	50 ohms
Modulation:	AM (Amplitude Modulation)
Channel Display:	7-segment LED x 2
Controls:	Volume Control with Power Switch Squelch Control RF Gain Control Mode Selector Switch Clarifier Control PA-CB Switch ANL/NB + ANL Switch Channel Selector Switch
Connectors and Jacks:	Microphone connector SO-239 Antenna connector (50 ohms) Public Address Speaker Jack (8 ohms) External Speaker Jack (8 ohms) 13.8V DC Power Jack
Speaker	3-½ inch, 8 ohms
Microphone:	Dynamic microphone (600 ohms)
Power Supply:	13.8 volts DC (Positive or Negative Ground)
Dimensions:	7-1/4"(W) x 2-¼"(H) x 9"(D) 18.4 cm(W) x 5.7 cm(H) x 22.9 cm(D)
Weight:	4 lbs. 5 oz. (2 kg.)

RECEIVER NOMINAL SPECIFICATIONS

Circuit:	PLL synthesized dual conversion superheterodyne
IF Frequency:	1st IF . . . . . 10.695 MHz, 2nd IF . . . . . 455 kHz
Sensitivity at S/N 10 dB:	AM 0.5 μV, SSB 0.25 μV
Selectivity:	(±10 kHz) 60 dB
AGC:	80 dB
S/N at 1mV input:	35 dB
Audio Power Output:	4 watts
Audio Frequency Response:	300 – 3.5 kHz
Spurious Response:	-60 dB
Squelch Range:	0.5 μV to 1000 μV
Current Drain (no signal):	250 mA

TRANSMITTER NOMINAL SPECIFICATIONS

RF Output Power:	AM 4W, SSB 12W PEP maximum
Modulation Capability:	100% maximum
Spurious Response:	-70 dB

NOTE

Repair or adjustment of transmitter circuits must be under supervision of a person with first-or second-class radiotelephone license.
(Refer to FCC Rules and Regulations Part 95, Subpart C & D.)

The frequency of the transmitter should be checked periodically with a secondary frequency standard to insure proper and legal operation.

Best results will be obtained when adjusting the final RF output circuit if the antenna normally used is connected and the chassis is as nearly in the cabinet as possible.

Connect either 50-ohm dummy load or the normally used antenna system.

ALIGNMENT OF RECEIVER SECTION

1. **Equipment Required:**
   a. RF Signal Generator (27 MHz Band, 50 ohm output impedance)
   b. AF VTVM
   c. Oscilloscope
   d. DC Power Supply
   e. 8 ohm load

2. **Procedure**
   Connect Test Equipment as shown below.

Step	Preset To	Adjustment	Remarks
1	CH: 19, PA/CB: CB, CLARI: Center, AF VOL: Fully CW, RF VOL: Fully CW, SQUELCH: Fully CCW, NB/ANL: OFF.		Set the SG on CH19, 27.185 MHz with 1 KHz 30% modulation.
2	Same as step 1	L-10, 9, 8, 7, 6, 5, 4 and 3.	Adjust coils to obtain 2V reading on AF VTVM. Then repeat this adjustment several times.
3	Same as step 1	L-8 and L-9.	Turn the core of L-8 in the full CW. position. Adjust L-9 for maximum reading. Adjust L-8 for maximum reading. Then readjust L-8 to keep the difference of sensitivity within 1 dB between CH1 and CH40.
4	Same as step 1 SQUELCH: Fully CW.	VR-2	Set the SG to 1000 μV then adjust VR-2 till AF signal is observed on oscilloscope.
5	Same as step 1	VR-1	Set the SG to 100 μV with no modulation then adjust VR-1 to obtain "S-9" reading on Transceiver's meter.
6	Same as step 1	L-1 and L-2	Set the oscilloscope for DC operation. Adjust SG to approx. 1.6 μV then adjust coils for maximum reading on oscilloscope.

RECEIVER TEST EQUIPMENT CONNECTIONS

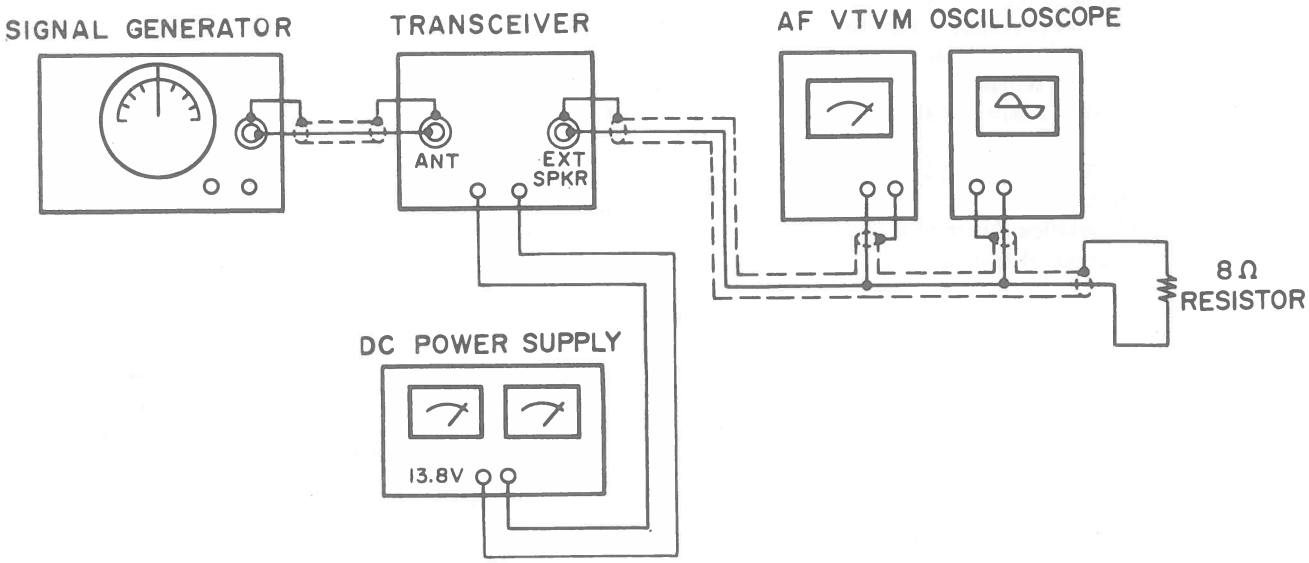

ADJUSTMENTS AND TEST POINTS

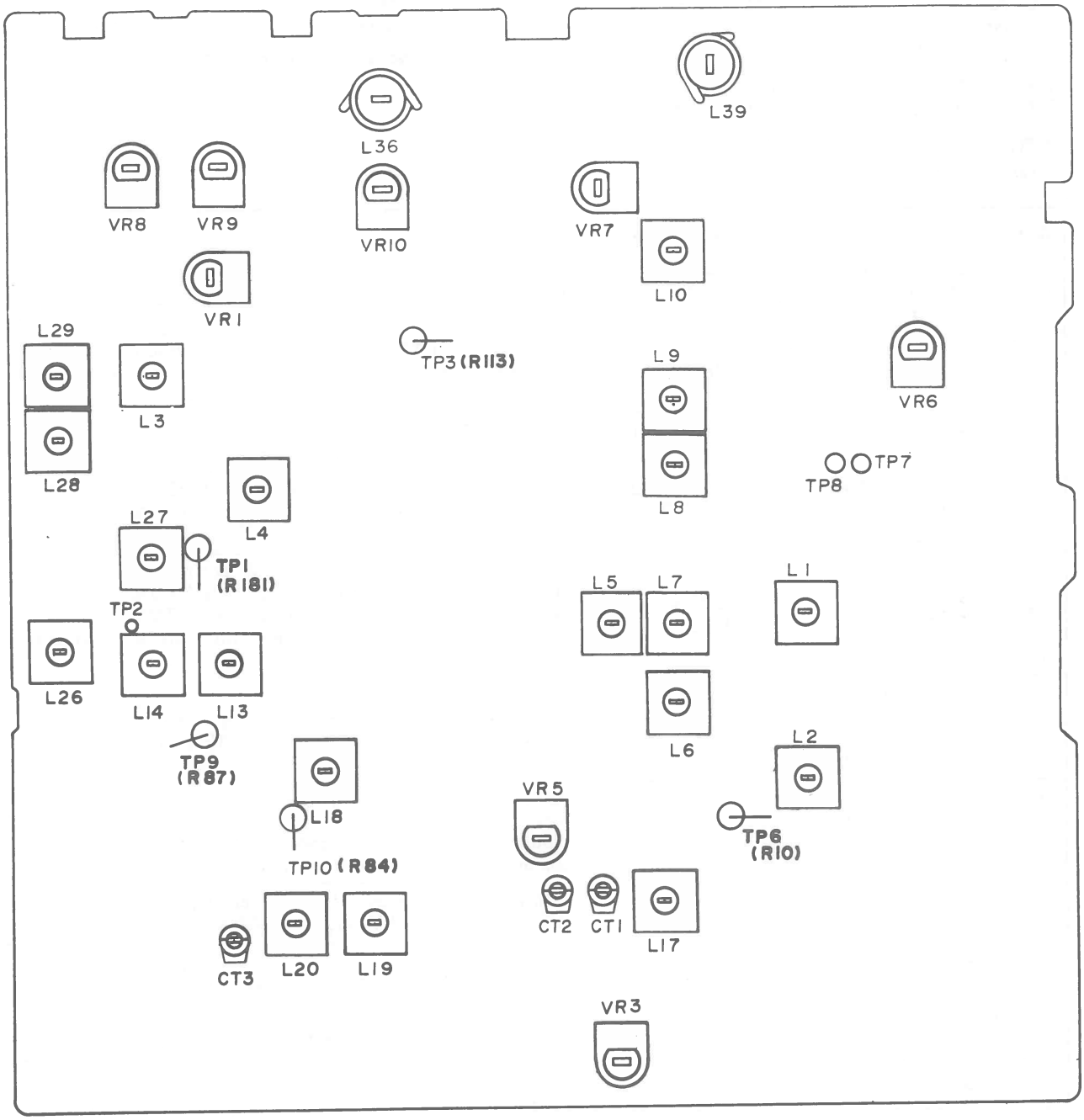

ALIGNMENT OF TRANSMITTER SECTION

1. Equipment Required:

a. AF Oscillator (two required)
b. AF VTVM (Full scale: 1V DC with RF probe)
c. DC Ammeter
d. RF Power Meter
e. 50 ohm load and Attenuator
f. AF Attenuator, 600-ohm, attenuation range 0 – 80 dB, 0.1 dB step.
g. Oscilloscope
h. RV VTVM
i. Harmonic Meter
j. DC Power Supply (13.8 V/3 amp.)

2. Procedure

Connect Test Equipment as shown below.

Step	Preset To	Adjustment	Remarks
1	CH: 19, PA/CB: CB USB mode, TX S1 and S2: OFF	VR-8	Break circuit at TP-8, place DC mA meter in series. Adjust for 30mA $^{+5}_{-0}$ mA. If it is not reached to 30 mA, set the VR-8 for fully CCW.
2	Same as step 1	VR-9	Break circuit at TP-7, place DC mA meter in series. Adjust for 60mA $^{-5}_{+0}$ mA. If 60 mA can not be attained, set VR-9 for fully CW.
After STEP 1 and STEP 2, restore circuit at TP-8 and TP-7.			
3	Same as step 1 OSC 1: 500 Hz OSC 2: 2400 Hz S1 and S2: ON	L-26, 27, 28 and L-29	Reduce the AF ATT to maintain the 15V-20V range on the RF VTVM, while adjusting coils for peak reading.
4	Same as step 3	L-29 and L-28	Turn the core of L-29 in the full CW. position. Adjust L-28 for maximum reading on RF VTVM. Adjust L-29 for maximum reading on RF VTVM. Then readjust L-29 to keep the RF output voltage reading on CH1 and CH40 within 1V.
5	Same as step 1 AM mode OSC 1: 1 KHz S1: ON, S2: OFF.	L-36	Adjust level of OSC 1 for 5mV reading on AF VTVM, then adjust L-36 for maximum reading on RF VTVM.
6	Same as step 1 S1 and S2: OFF	VR-5	Adjust for minimum carrier leakage for both USB and LSB on oscilloscope. Note: Connect the oscilloscope to the Antenna Connector of the unit. 50 Ω Load must be connected to antenna.
7	Same as step 3	VR-7	Adjust OSC 1 and OSC 2 for 5mV reading on AF VTVM then adjust VR-7 for 24.5V reading on RF VTVM.
8	Same as step 1 AM mode S1 and S2: OFF.	VR-6	Adjust for 4.0W reading on RF Power meter.
9	Same as step 8	VR-10	Adjust for reading of 4W on the Transceiver's meter.
10	Same as step 8	L-39	Adjust for minimum 2'nd harmonic (54 MHz) on Harmonic meter.

TRANSMITTER TEST EQUIPMENT CONNECTIONS

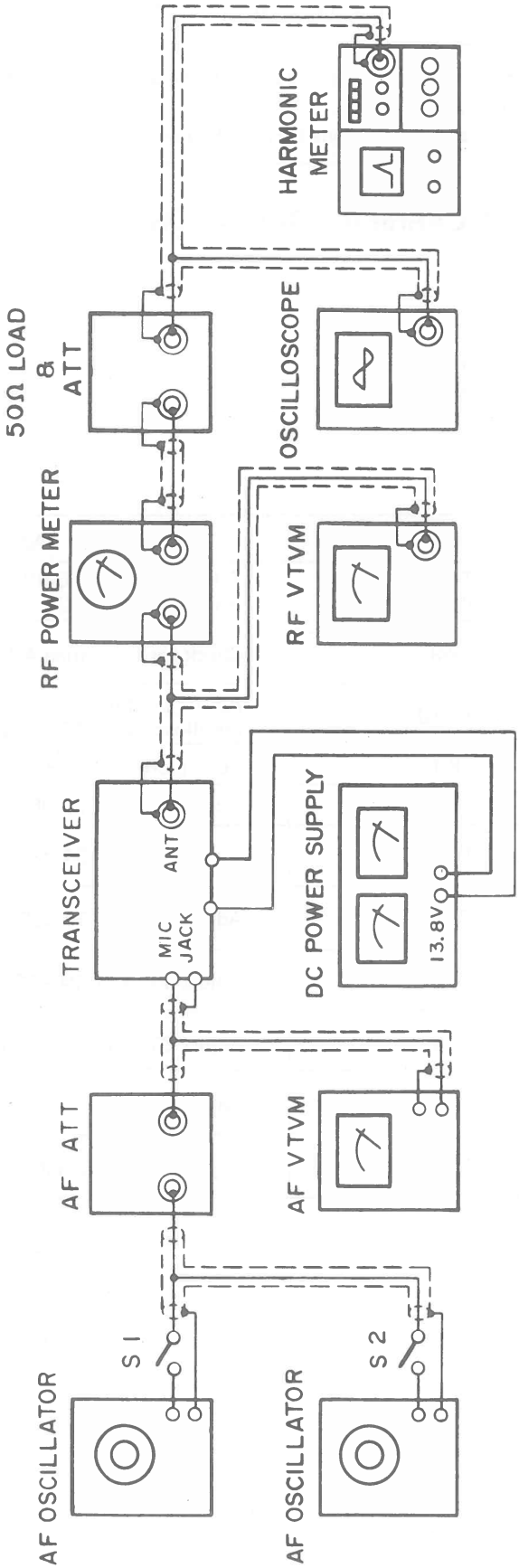

PUBLIC ADDRESS

Signal from the MIC is preamplified by TR29 and TR28 and then goes to TR36 after being amplified in TR30, PA Switching Transistor. The signal is amplified by IC4 and activates a PA speaker.

> **NOTE** **Repair or adjustment of transmitter circuits must be under supervision of a person with first-or second-class radiotelephone license.**
> **(Refer to FCC Rules and Regulations Part 95, Subpart C & D.)**

ALIGNMENT OF PLL AND CARRIER OSCILLATOR

1. **Test equipment required:**
   a. Oscilloscope (DC – 50 MHz)
   b. Frequency counter (0 – 30 MHz)
   c. DC Power Supply (13.8V 100 mA)
   d. DC Voltmeter (10V Maximum 100K ohm/V)
   e. 50 ohm Load
2. **Alignment procedure:**
   Connect Test Equipment as shown below.

Step	Preset To	Connection	Adjustment
1	CH: 40, USB, RX, Clarifier in center	TP-9 (lead of R-181)	Adjust L-13 for a 6.5V DC reading on oscilloscope. (oscilloscope in DC operation)
2	Same as step 1. CH: 1.	TP-9	Check for more than 4V DC reading on oscilloscope.
3	Same as step 1. CH: 19.	TP-10	Adjust L-18 for maximum reading on oscilloscope. (oscilloscope in AC operation)
4	Same as step 3.	TP-1	Adjust L-14 for maximum reading on oscilloscope.
5	Same as step 3.	TP-1	Adjust CT-3 for 34.987500 MHz ±20 Hz.
6	Same as step 1. CH: 19, AM.	TP-1	Adjust L-20 for 34.985000 MHz ±20 Hz.
7	Same as step 1. CH: 19, LSB.	TP-1	Adjust L-19 for 34.9825 MHz ±20 Hz.
8	Same as step 1. CH: 19, LSB, TX.	TP-1	Adjust VR-3 for 34.9825 MHz ±20 Hz.
9	Same as step 1. CH: 19, LSB.	TP-3	Adjust CT-2 for 7.797500 MHz $^{+0}_{-5}$ Hz.
10	Same as step 1. CH: 19, USB.	TP-3	Adjust CT-1 for 7.802500 MHz $^{+5}_{-0}$ Hz.
11	Same as step 1. CH: 19, TX.	TP-3	Adjust L-17 for 7.800000 MHz ±5 Hz.

PLL AND CARRIER OSCILLATOR TEST EQUIPMENT CONNECTIONS

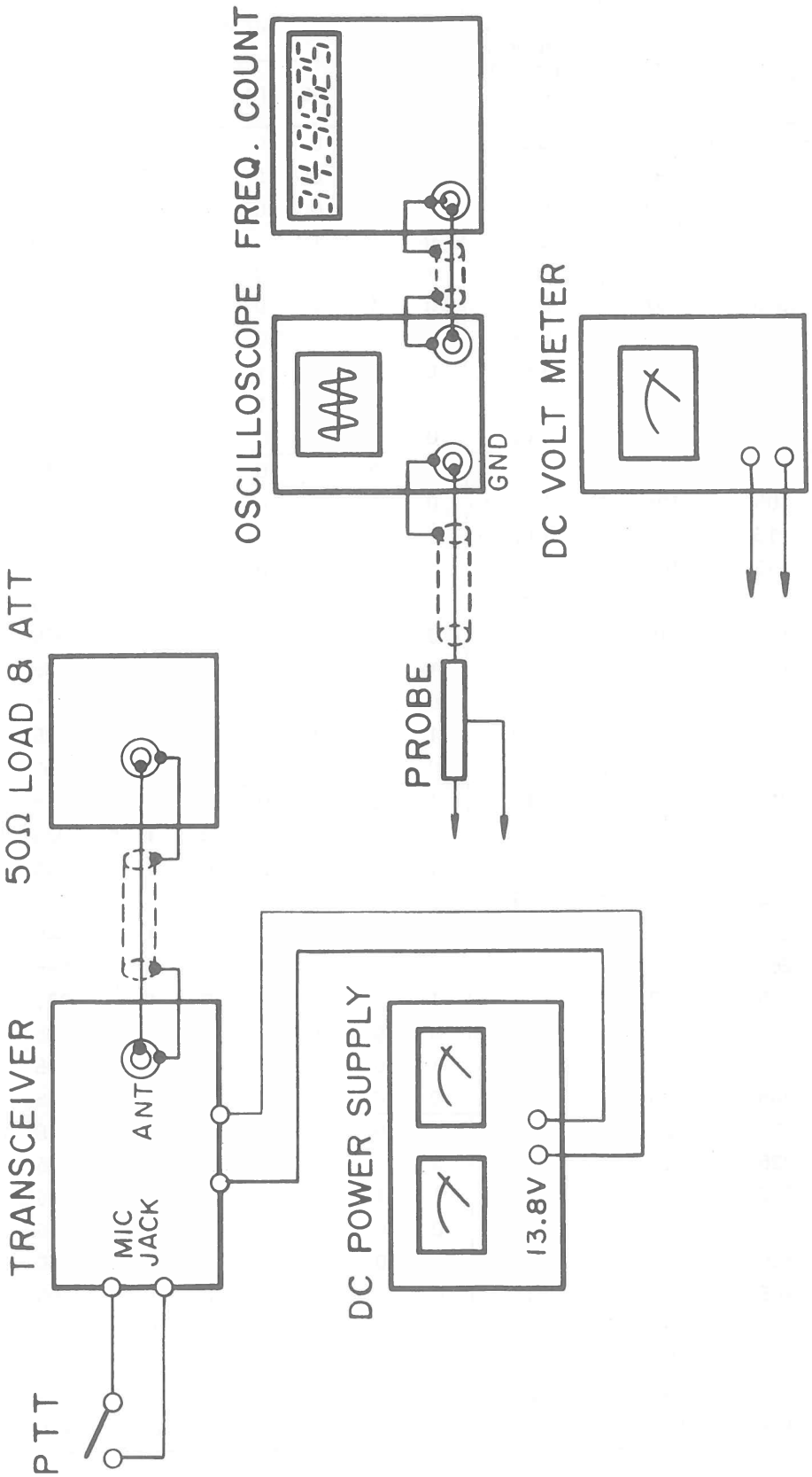

FREQUENCY CHART OF PLL

CH	Channel frequency (MHz)	Divide ratio (N)	1/N Input Frequency at TP-10 (MHz)	Program input at IC-2						Local oscillator frequency at TP-1 (MHz)		
				P1	P2	P3	P4	P5	P6	AM mode	USB mode	LSB mode
1	26.965	91	0.91	1	0	0	0	0	0	34.765	34.7675	34.7625
2	.975	92	0.92	0	1	0	0	0	0	.775	.7775	.7725
3	.985	93	0.93	1	1	0	0	0	0	.785	.7875	.7825
4	27.005	95	0.95	0	0	1	0	0	0	.805	.8075	.8025
5	.015	96	0.96	1	0	1	0	0	0	.815	.8175	.8125
6	.025	97	0.97	0	1	1	0	0	0	.825	.8275	.8225
7	.035	98	0.98	1	1	1	0	0	0	.835	.8375	.8325
8	.055	100	1.00	0	0	0	1	0	0	.855	.8575	.8525
9	.065	101	1.01	1	0	0	1	0	0	.865	.8675	.8625
10	.075	102	1.02	0	0	0	0	1	0	.875	.8775	.8725
11	.085	103	1.03	1	0	0	0	1	0	.885	.8875	.8825
12	.105	105	1.05	0	1	0	0	1	0	.905	.9075	.9025
13	.115	106	1.06	1	1	0	0	1	0	.915	.9175	.9125
14	.125	107	1.07	0	0	1	0	1	0	.925	.9275	.9225
15	.135	108	1.08	1	0	1	0	1	0	.935	.9375	.9325
16	.155	110	1.10	0	1	1	0	1	0	.955	.9575	.9525
17	.165	111	1.11	1	1	1	0	1	0	.965	.9675	.9625
18	.175	112	1.12	0	0	0	1	1	0	.975	.9775	.9725
19	.185	113	1.13	1	0	0	1	1	0	.985	.9875	.9825
20	.205	115	1.15	0	0	0	0	0	1	35.005	35.0075	35.0025
21	.215	116	1.16	1	0	0	0	0	1	.015	.0175	.0125
22	.225	117	1.17	0	1	0	0	0	1	.025	.0275	.0225
23	.255	120	1.20	1	1	0	0	0	1	.055	.0575	.0525
24	.235	118	1.18	0	0	1	0	0	1	.035	.0375	.0325
25	.245	119	1.19	1	0	1	0	0	1	.045	.0475	.0425
26	.265	121	1.21	0	1	1	0	0	1	.065	.0675	.0625
27	.275	122	1.22	1	1	1	0	0	1	.075	.0775	.0725
28	.285	123	1.23	0	0	0	1	0	1	.085	.0875	.0825
29	.295	124	1.24	1	0	0	1	0	1	.095	.0975	.0925
30	.305	125	1.25	0	0	0	0	1	1	.105	.1075	.1025
31	.315	126	1.26	1	0	0	0	1	1	.115	.1175	.1125
32	.325	127	1.27	0	1	0	0	1	1	.125	.1275	.1225
33	.335	128	1.28	1	1	0	0	1	1	.135	.1375	.1325
34	.345	129	1.29	0	0	1	0	1	1	.145	.1475	.1425
35	.355	130	1.30	1	0	1	0	1	1	.155	.1575	.1525
36	.365	131	1.31	0	1	1	0	1	1	.165	.1675	.1625
37	.375	132	1.32	1	1	1	0	1	1	.175	.1775	.1725
38	.385	133	1.33	0	0	0	1	1	1	.185	.1875	.1825
39	.395	134	1.34	1	0	0	1	1	1	.195	.1975	.1925
40	.405	135	1.35	0	0	0	0	0	0	.205	.2075	.2025

0: Low level (0-1 V)

1: Hi level (3.5-6 V)

MAIN P.C.BOARD (TOP VIEW)

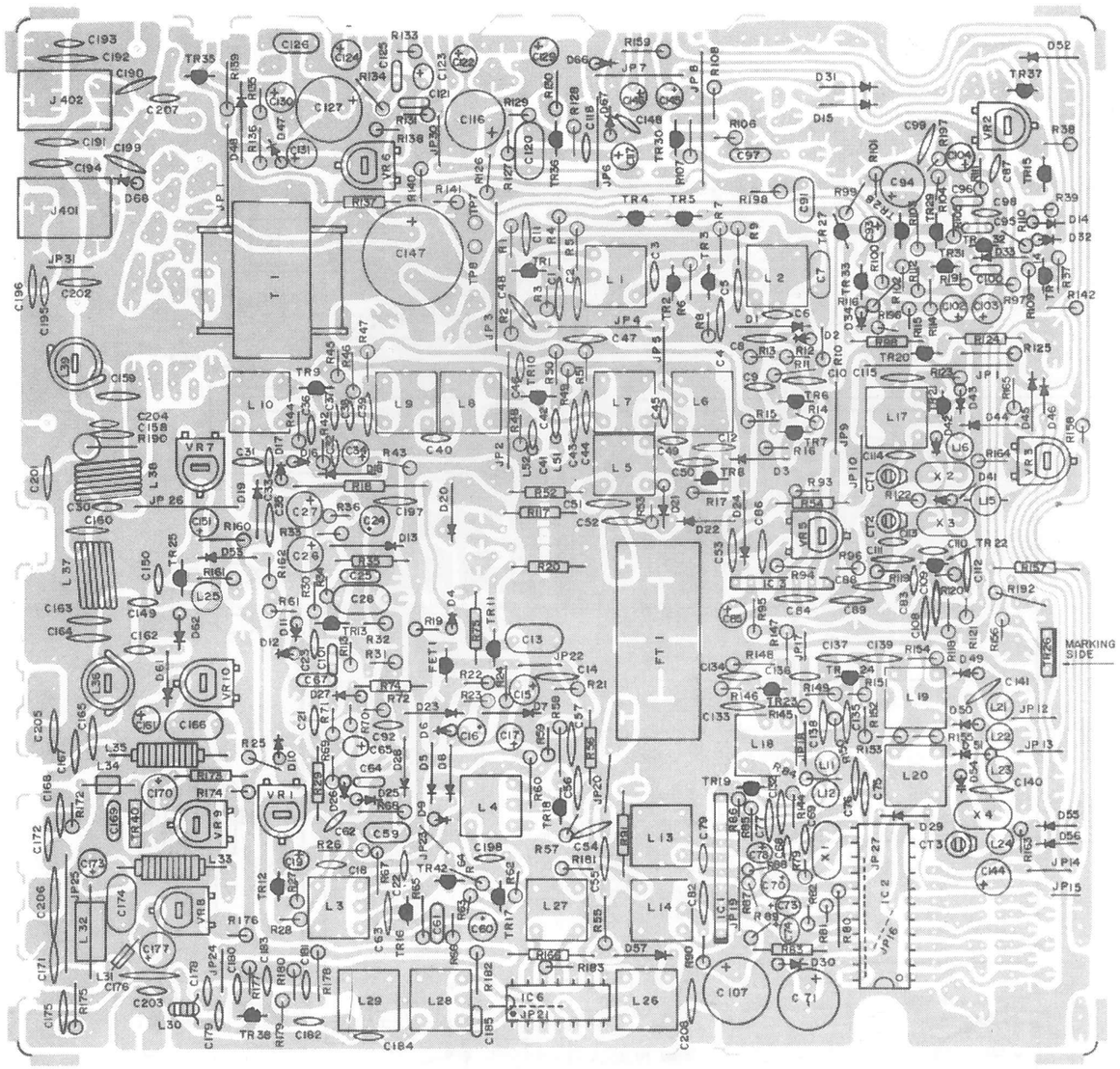

WIRING DIAGRAM OF MAIN P.C.BOARD AND ADDITIONAL PARTS ON BOTTOM

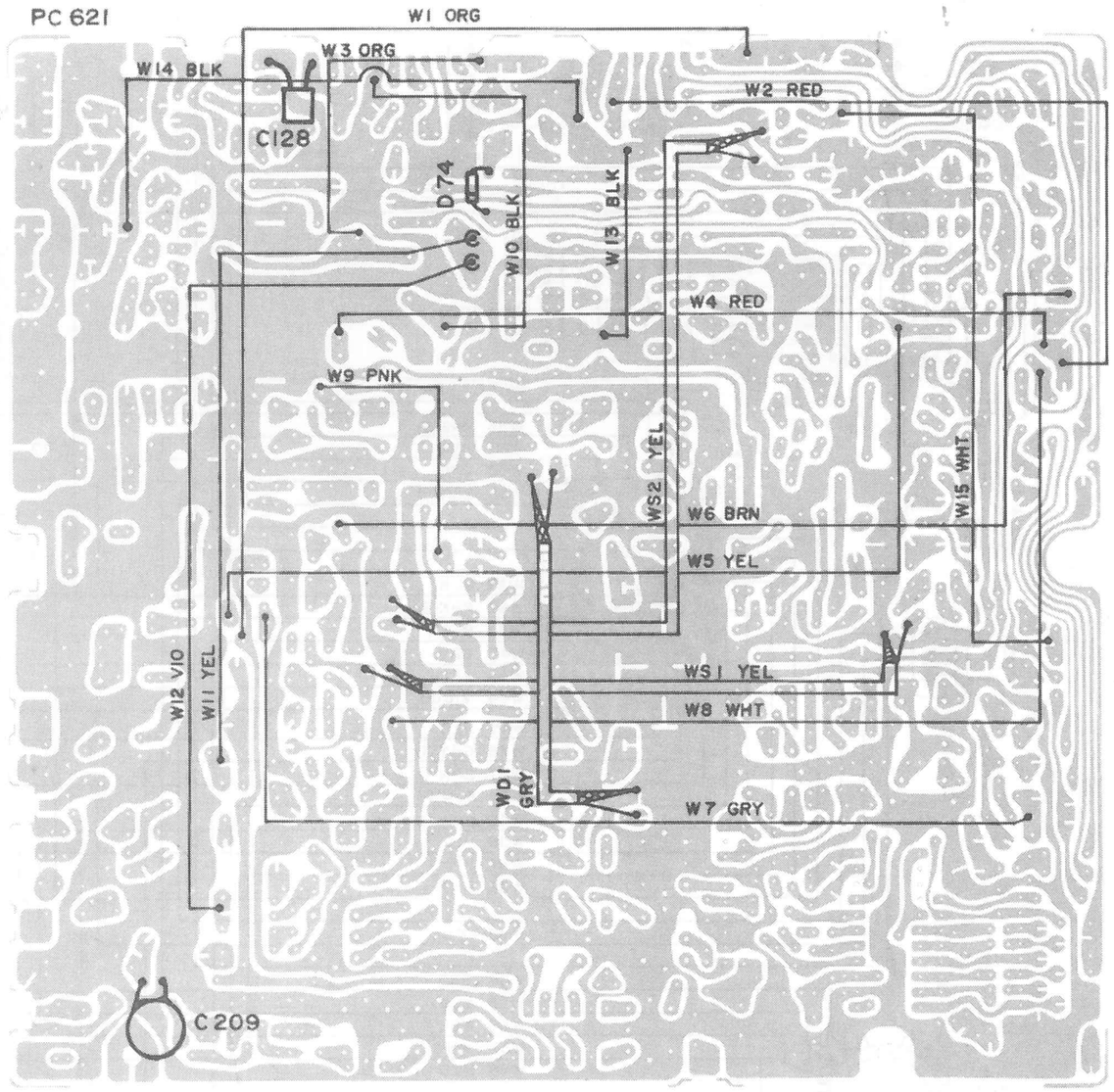

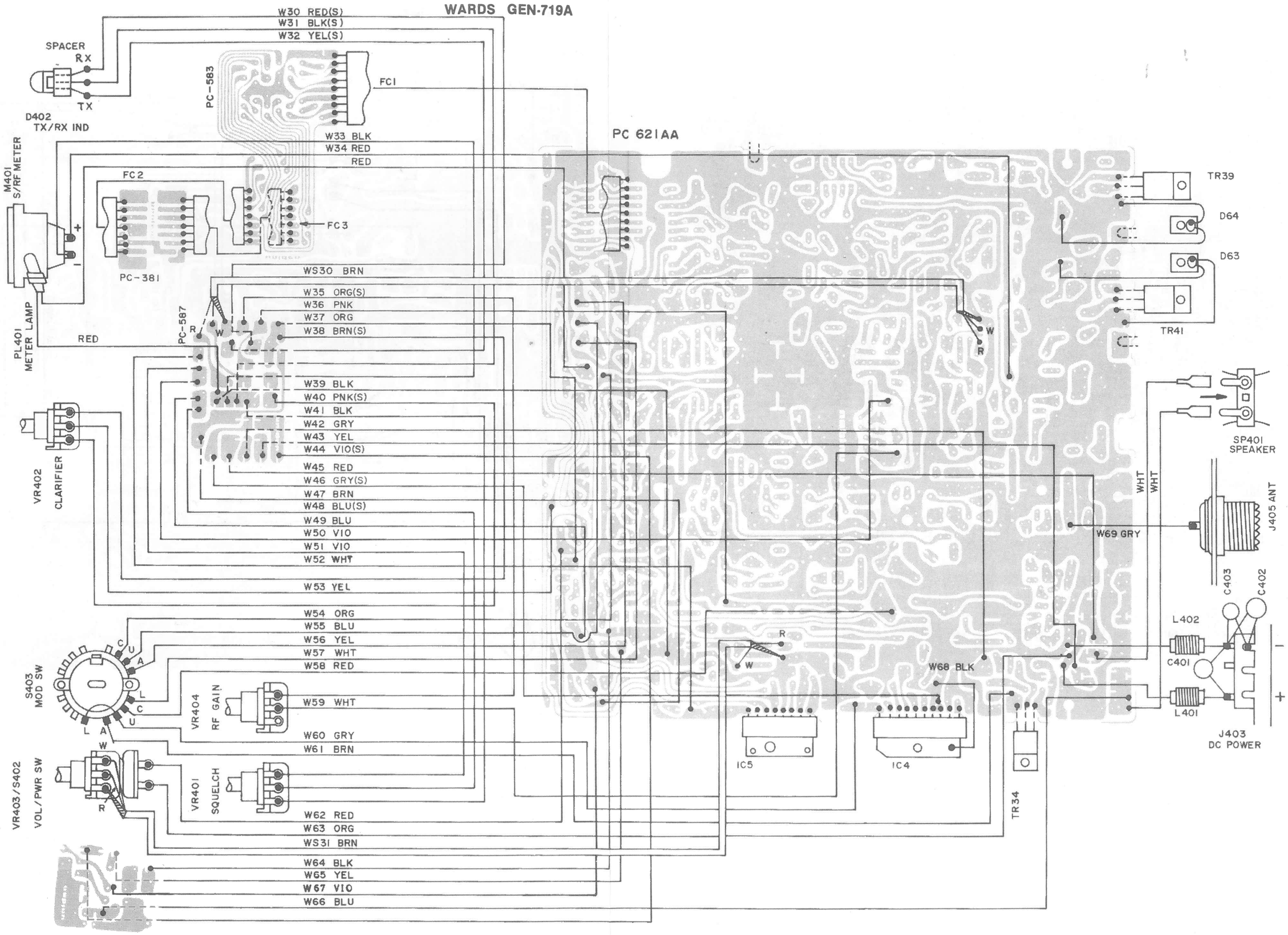
WARDS GEN-719A
W30 RED(S)
W31 BLK(S)
W32 YEL(S)
SPACER
RX
TX
D402
TX/RX IND
PC-583
FC1
W33 BLK
W34 RED
RED
M401
S/RF METER
FC2
FC3
PC-381
PC 621AA
TR39
D64
D63
TR41
WS30 BRN
W35 ORG(S)
W36 PNK
W37 ORG
W38 BRN(S)
PC-587
PL401
METER LAMP
RED
W39 BLK
W40 PNK(S)
W41 BLK
W42 GRY
W43 YEL
W44 VIO(S)
W45 RED
W46 GRY(S)
W47 BRN
W48 BLU(S)
W49 BLU
W50 VIO
W51 VIO
W52 WHT
W53 YEL
VR402
CLARIFIER
SP401
SPEAKER
WHT
WHT
J405 ANT
W69 GRY
C403
C402
L402
C401
L401
J403
DC POWER
W54 ORG
W55 BLU
W56 YEL
W57 WHT
W58 RED
S403
MOD SW
VR404
RF GAIN
W59 WHT
W60 GRY
W61 BRN
W68 BLK
IC5
IC4
TR34
VR403/S402
VOL/PWR SW
VR401
SQUELCH
W62 RED
W63 ORG
WS31 BRN
W64 BLK
W65 YEL
W67 VIO
W66 BLU

PARTS LAYOUT DRAWINGS

CH SW PCB

PC 583

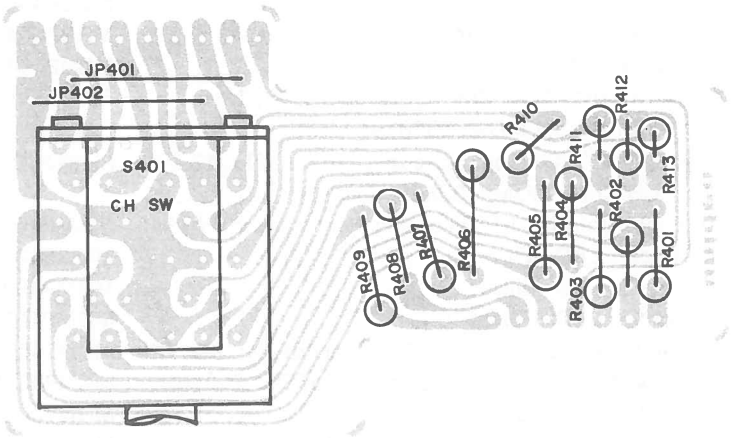

CH LED PCB

PC 381

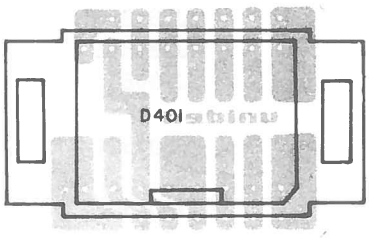

SLIDE SW PCB

PC 587

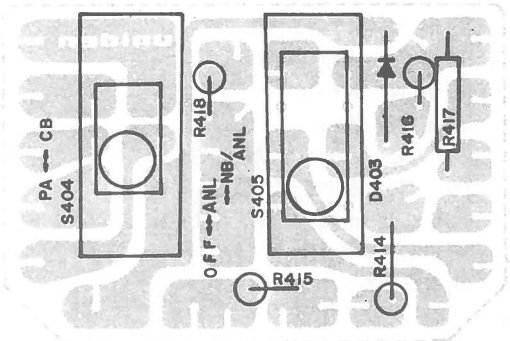

MIC JACK PCB

PC 389

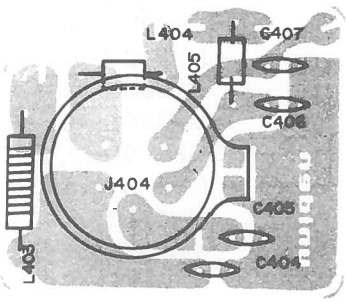

REF. NO.	PART NO.	DESCRIPTION	MFRS. PART CODE
	J381610	Chassis Assembly (Inc. Ref. #20 and chassis MDBC205978)	WAKU534Z-A
	J70954	Cabinet Top Cover	MDBP205979
	J70955	Cabinet Bottom Cover	MDBP205980
	J381611	Unit Mounting Bracket	MDBP406058
	J381612	Chassis Panel, Front	MDBP307818
	J381613	Microphone Mounting Bracket	MDBP402919
	J261020	Terminal Strip (Metal), Ground	MDBP405562
	J381614	Bracket, Meter Holding	MDBP404022
	J381615	Bracket, S401 Mounting	MDBP404024
	J70956	Front Panel Ass'y (Inc. Ref. Nos. 16, 17, 19 and Front Panel MDMP207819)	FPANEL534Z
	J501301	Knob Ass'y Channel Selector (Inc. Ref. No. 42 and CH Knob MDMP403855)	CHKNOB534Z
	J501302	Knob, Volume, RF Gain, Clarifier, Squelch, Mode	MDMP401728
	J64252	Holder, LED (Violet)	MDMP404790
	J64253	Holder, LED (Black)	MDMP403857
	J64254	Holder, LED, Rubber (Black)	MDMP407400
	N.A. Separately	Nameplate, Control, A1P 0.5t (Part of Ref. No. 10)	MDNP407820
	N.A. Separately	Nameplate, Brand, A1P 0.5t (Part of Ref. No. 10)	MDNP407821
	J15127	F.C.C. I.D. Plate	MDNP407822
	N.A. Separately	Panel, Front Display, 1.0t (Part of Ref. No. 10)	MDAP407823
	N.A. Separately	Supporter, Mounting Bracket (Part of Ref. No. 1)	MDHP403988
	J381616	Cushion, Meter Mounting	MDZP404326
	J471710	Screw, Pan Hd, Plastic, M3 x 6	MZSS123006
	MHSCC 3 x 8	Screw, Flat Hd, Ni, M3 x 8	MZSN133008
	MHSBC 2 x 5	Screw, Bind Hd, Ni, M2 x 5	MZSN192005
	MHSBC 2.6 x 4	Screw, Bind Hd, Ni, M2.6 x 4	MZSN192604
	MHSBC 2.6 x 6	Screw, Bind Hd, Ni, M2.6 x 6	MZSN192606
	MHSBC 2.6 x 10	Screw, Bind Hd, Ni, M2.6 x 10	MZSN192610
	MHSBC 3 x 6	Screw, Bind Hd, Ni, M3 x 6	MZSN193006
	MHSBC 3 x 8	Screw, Bind Hd, Ni, M3 x 8	MZSN193008
	MHSHB 3.5 x 8	Tapping Screw, Round Hd, ZMC, 3.5ϕ x 8	MZSZ293508
	MHSHB 5 x 10	Tapping Screw, Round Hd, ZMC, 5ϕ x 10	MZSZ295010
	MHSJC 3 x 8	Tap Tight Screw, Bind Hd, ZMC, M3 x 8	MZSZ343008
	MHNVC 2.6 x 5	Nut, Hex, Ni, M2.6 x 5	MZSN430026
	MHNVC 3.5 x 5	Nut, Hex, Ni, M3 x 5.5	MZSN430030
	J471711	Nut, Flange, ZMC, M3	MZSZ480030
	J471712	Screw, Unit Mounting Bracket	MDMC405736
	J421057	Washer, Rubber, Unit Mtg. Bracket	MDZP400638
	J421058	Washer, Spring, Ni, 2.6ϕ	MZSN510026
	MHNTB 3.5 x 7.3	Washer, Lock, ZMC, 3.5ϕ x 7.3	MZSZ530035
	MHNTB 5 x 9.8	Washer, Star, ZMC, 5ϕ x 9.8	MZSZ540050
	J261031	Terminal, Lug, Solder	MZTT150003
	N.A. Separately	Spring Plate, Knob (Part of Ref. No. 11)	MZTT200003
	J471713	Rivet, AL, ID Plate, 3ϕ x 5	MZTT213250
	J75284	Packing Cushion, Top	MDPP204869
	J75285	Packing Cushion, Bottom	MDPP304870
	J75286	Individual Carton Box	MDPP307824
	J59266	Owner's Guide	MZPZ543001
	E591948	Warranty Card	MZPZ534004
	J59237	FCC Rules Part 95, Subpart D	MZPY000025
	J381617	Hardware Kit (Includes: Ref. Nos. 31 (2 pcs.) 40 (2 pcs.), 30 (2 pcs.), 39 (2 pcs.), 6 (1 pc.) in plastic bag)	HWK-534Z

REF. NO.	PART NO.	DESCRIPTION	MFR PART CODE
SEMICONDUCTORS			
IC1	UHIC070	Integrated Circuit, UHIC070	DDEY133001
IC2	μPD2824C	Integrated Circuit, μPD2824C	DDEY190001
IC3	AN612	Integrated Circuit, AN612	DDEY130001
IC4	TA7222P	Integrated Circuit, TA7222P	DDEY146001
IC5	MB3756	Integrated Circuit, MB3756	DDEY131001
IC6	SO42P	Integrated Circuit, SO42P	DDEY132001
FET1	2SK19(BL)	Field Effect Transistor, 2SK19BL	DDCY001002
TR1, 2, 6, 10, 12, 21, 22, 24, 25, 42	2SC710(C)	Transistor, 2SC710C	DDBY209001
TR3, 8, 16	2SC1730(L)	Transistor, 2SC1730L	DDBY269001
TR4, 5, 11, 13, 15, 20, 27, 32, 33, 35, 37	2SC711(E)	Transistor, 2SC711E	DDBY210002
TR7, 14, 30, 31	2SA628(F)	Transistor, 2SA628F	DDBY019001
TR9	2SC1674(L)	Transistor, 2SC1674L	DDBY295002
TR17, 18	2SC763(C)	Transistor, 2SC763C	DDBY216001
TR19, 23	2SC1675(L)	Transistor, 2SC1675L	DDBY259001
TR26, 40	2SC496(O)	Transistor, 2SC496-O	DDBY246001
TR28	2SC945A(Q)	Transistor, 2SC945AQ	DDBY224003
TR29, 36	2SC1312(F)	Transistor, 2SC1312F	DDBY317001
TR34	2SC1419(C)	Transistor, 2SC1419C	DDBY278001
TR38	2SC1973	Transistor, 2SC1973	DDBY272001
TR39	2SC1306	Transistor, 2SC1306	DDBY230001
TR41	2SC1969(B)	Transistor, 2SC1969B	DDBY307001
D1, 2, 9, 25, 26, 48	1N60	Diode, 1N60	DDAY001004
D3, 4, 5, 6, 7, 8, 10, 11, 12, 13, 14, 15, 18, 19, 20, 21, 22, 23, 24, 27, 28, 29, 31, 32, 33, 34, 41, 42, 43, 44, 45, 46, 47, 49, 50, 51, 52, 53, 55, 56, 57, 61, 62, 74, 403	1S2075(K)	Diode, 1S2075K	DDAY063001
D16, 17	MC301	Diode, MC301	DDAY090001
D30	RD5, 1EB2	Diode, Zener, RD-5. 1E-B2	DDAY086014
D54	1S2687(D)	Diode, Vari-Cap, 1S2687D	DDAY067001
D63	MV13YH	Varistor, MV13YH	DDFY021001
D64	MV1Y	Varistor, MV1Y	DDFY020001
D66, 68	1N4003	Diode, 1N4003	DDAY133001
D67	RD20EB1	Diode, Zener, RD-20E-B-1	DDAY086012
D401	UR202	Diode, LED, UR202	DDAY113001
D402	TLRG101	Diode, LED, TLRG101	DDAY102001

TRANSISTOR AND IC PIN CONFIGULATIONS

μPD2824C

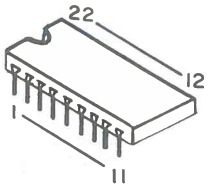

UHIC070

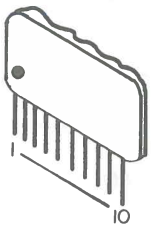

AN612

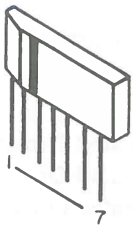

MB8756

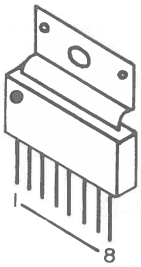

TA7222P

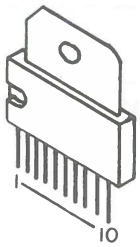

SO42P

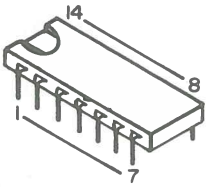

2SK19-BL

2SA628-F
2SC710-C
2SC711-E

2SC763-C
2SC1312-F

2SC945A-Q
2SC1674-L
2SC1675-L
2SC1730-L
2SC1973

2SC1306
2SC1419-C
2SC1969-B

2SC496-O

TLRG-101

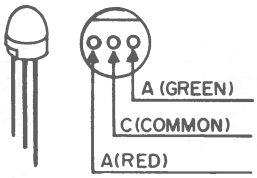

1N60
1N4003
1S2075K
1S2687D
MC301
RD5.1E-B2
RD20E-B1

MV-1Y

MV-13YH

TLR-124

UR-202

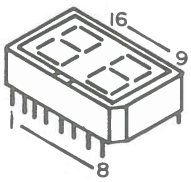

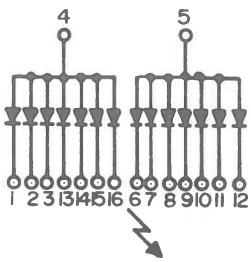

NOTE

FET	D	DRAIN
	S	SOURCE
	G	GATE
TR	E	EMITTER
	C	COLLECTOR
	B	BASE
DIODE	A	ANODE
	C	CATHODE

VOLTAGE CHART

CONDITION: Measured at Channel 19, No signal.

BIPOLAR TRANSISTOR

No.	Emitter	Base	Collector	Remarks
TR 1	0.5	1.2	7.8	RX, NB switch ON
2	0	0.7	2.4	RX, NB ON
3	1.6	2.4	6.8	RX, NB ON
4	0.5	0.5	8.0	RX, NB ON
5	0.5	0.4	8.0	RX, NB ON
6	0	0	7.4	RX, NB ON
7	8.0	7.4	0	RX, NB ON
8	0	0	0	
9	1.5	2.2	7.9	RX, RF Gain C.W.
	0	0.5	8.0	RX, RF Gain C.C.W.
10	0.1	0.3	7.9	RX
11	2.2	2.8	2.2	RX
	0	0	7.4	TX
12	0	0.5	8.0	RX
13	0.7	1.3	4.7	RX, SQ, C.C.W.
	1.7	1.4	7.9	RX, SQ, C.W.
14	8.0	8.0	0.7	RX, SQ, C.C.W.
	8.0	7.4	8.0	RX, SQ, C.W.
	0	0	0	TX
15	0.6	0	8.0	RX, SQ, C.C.W.
	1.1	2.5	7.4	RX, SQ, C.W.
16	2.1	2.9	7.1	RX
17	0	0.8	3.6	RX
18	1.5	2.2	6.8	RX
19	3.3	4.0	8.0	
20	0	0	7.5	TX, AM
	0	0	0.2	RX, AM
	0	0.8	0	TX and RX, SSB
21	0	0.8	0	TX, AM
	0	0.2	0	RX, AM
	0	0.1	0.3	TX and RX, USB only
	0	0.1	0	TX and RX, LSB only
22	1.6	2.3	7.6	
23	0.9	1.4	8.0	
24	2.8	3.5	6.5	
25	0	0	6.5	RX
	3.4	0	6.5	TX, AM
	1.6	0	6.5	TX, SSB
26	7.3	8	13.8	
	0.4	0.7	13.8	PA only
27	0	0.2	2.9	RX, AM
	0	0	2.9	RX, SSB
	1.3	1.9	1.3	TX, AM
	0	0.1	2.8	TX, SSB
28	1.1	1.7	3.2	
29	0.3	1.0	1.7	
30	3.2	3.2	0	
	2.2	1.5	2.2	PA only
31	6.9	6.6	0.7	RX
	6.9	6.6	0	TX
32	0	0.7	0	RX
33	4.1	0.8	6.5	
	1.4	0.7	6.5	RX, AM only
34	13.8	6.1	13.8	
	4.8	5.6	13.0	RX, AM only
35	6.1	6.5	13.8	RX
	5.6	6.2	13.0	TX, AM
	6.1	6.5	13.8	TX, SSB
36	2.7	3.3	6.3	RX
37	7.6	7.8	13.8	RX
	0	0.6	0	TX
38	0.6	1.3	8.0	TX
39	0	0.2	13.2	RX
	0	0.7	5.3	TX, AM
	0	0.7	13.8	TX, SSB
40	1.0	1.2	2.1	TX
41	0	0	13.2	RX
	0	0.7	5.3	TX, AM
	0	0.7	13.8	TX, SSB
42	2.8	3.5	8.0	RX

FIELD EFFECT TRANSISTOR

FET 1	Gate 0.2	Source 2.8	Drain 8.0

IC1 UHIC-070

Pin No.	1	2	3	4	5	6	7	8	9	10
Voltage	7.8	0	0	0	5.4	0	0	8.0	7.3	4.0

IC2 μPD-2824C

Pin No.	1	2	3	4	5	6	7	8	9	10	11
Voltage	5.0	0	0	5.0	5.0	0	5.0	5.0	0.1	2.5	5.0
Pin No.	12	13	14	15	16	17	18	19	20	21	22
Voltage	2.5	2.5	2.5	5.0	5.0	2.5	2.5	5.2	5.0	0	2.5

IC3 AN612

Pin No.	1	2	3	4	5	6	7
Voltage	2.9	3.2	3.2	0	5.7	7.2	7.4

IC4 TA7222P

Pin No.	1	2	3	4	5	6	7	8	9	10
Voltage	13.8	2.9	0	0	1.8	1.8	0	0	6.8	13.1

IC5 MB3756

Pin No.	1	2	3	4	5	6	7	8
Voltage	8.0	13.8	8.0	0	13.8	8.0	–	0
Voltage	(8.0)	(13.8)	(8.0)	(0)	(0)	(0)	–	(8.0)

IC6 SO42P

Pin No.	1	2	3	4	5	6	7	8	9	10
Voltage	0	7.8	7.8	0	7.8	0	2.8	2.8	0	1.5
Pin No.	11	12	13	14						
Voltage	1.4	1.5	1.4	0						

Remarks: Voltages of IC6 were measured on transmit mode.

IC EQUIVALENT CIRCUITS

UHIC007

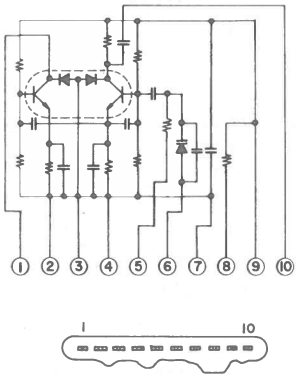

μPD2824C

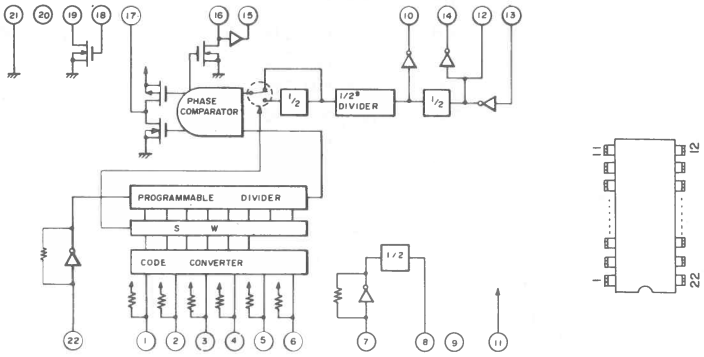

SO42P

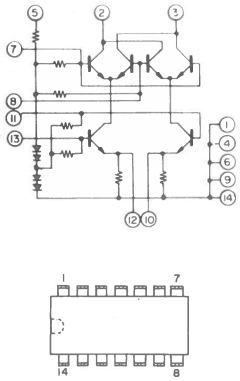

TA7222P

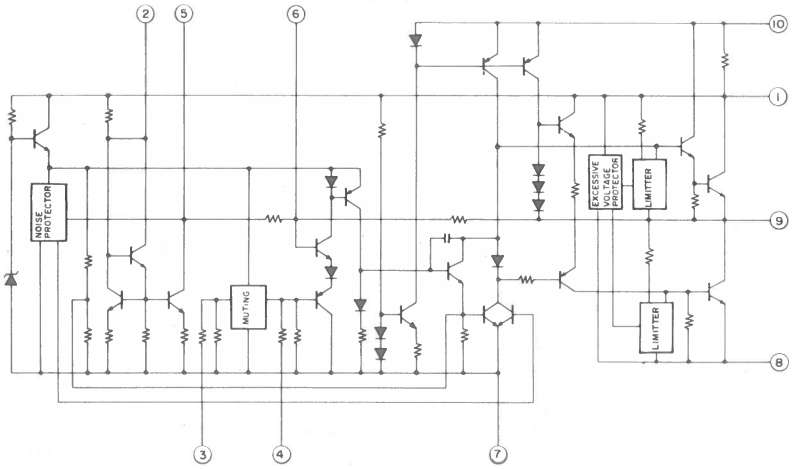

MB3756

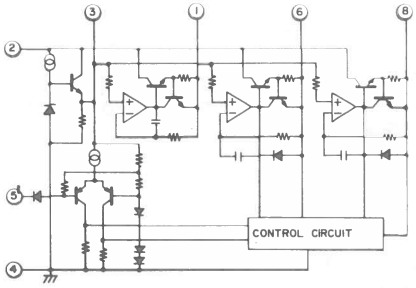

AN612

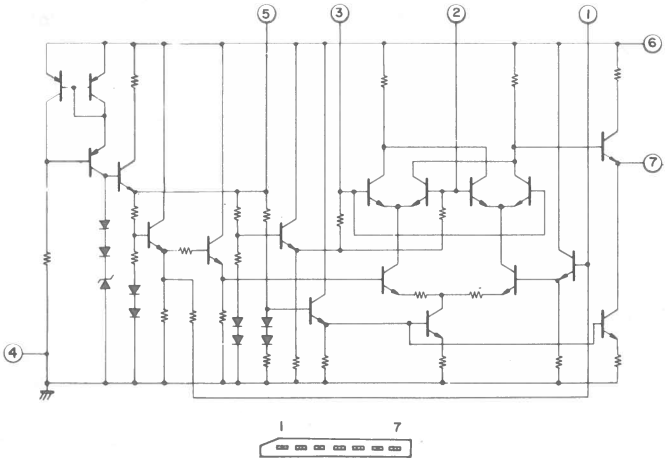

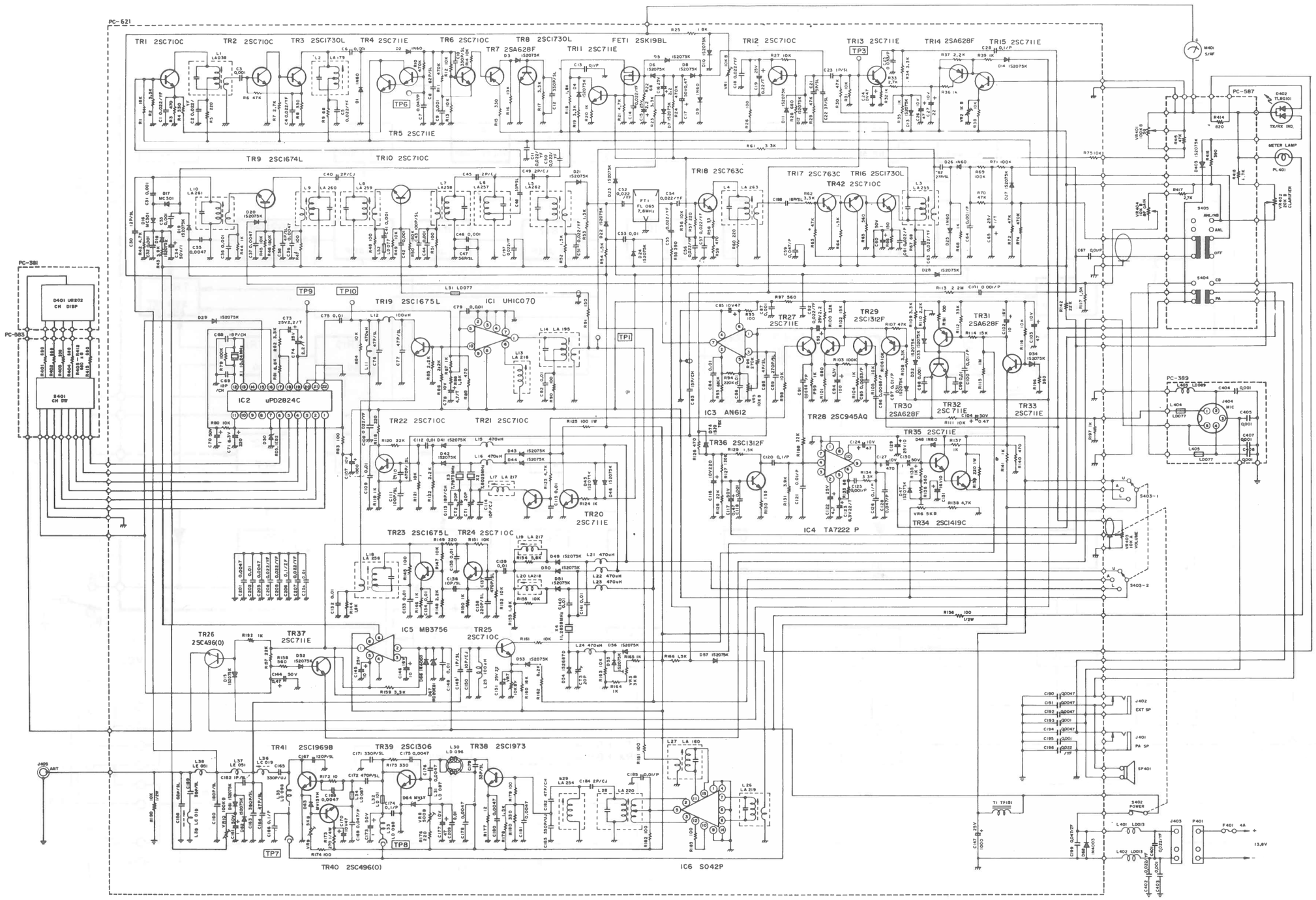

NOTES;

1. RESISTANCE VALUES ARE SHOWN IN OHMS UNLESS OTHERWISE NOTED. (K = 10^3 OHMS M = 10^6 OHMS)
2. RESISTOR WATTAGES ARE 1/8W UNLESS OTHERWISE SPECIFIED.
3. CAPACITANCE VALUES ARE INDICATED IN MICROFARADS UNLESS OTHERWISE SPECIFIED (P=MICRO-MICROFARADS)
4. ALL CAPACITORS TEMPERATURE CHARACTERISTICS ARE YD UNLESS OTHERWISE NOTED.

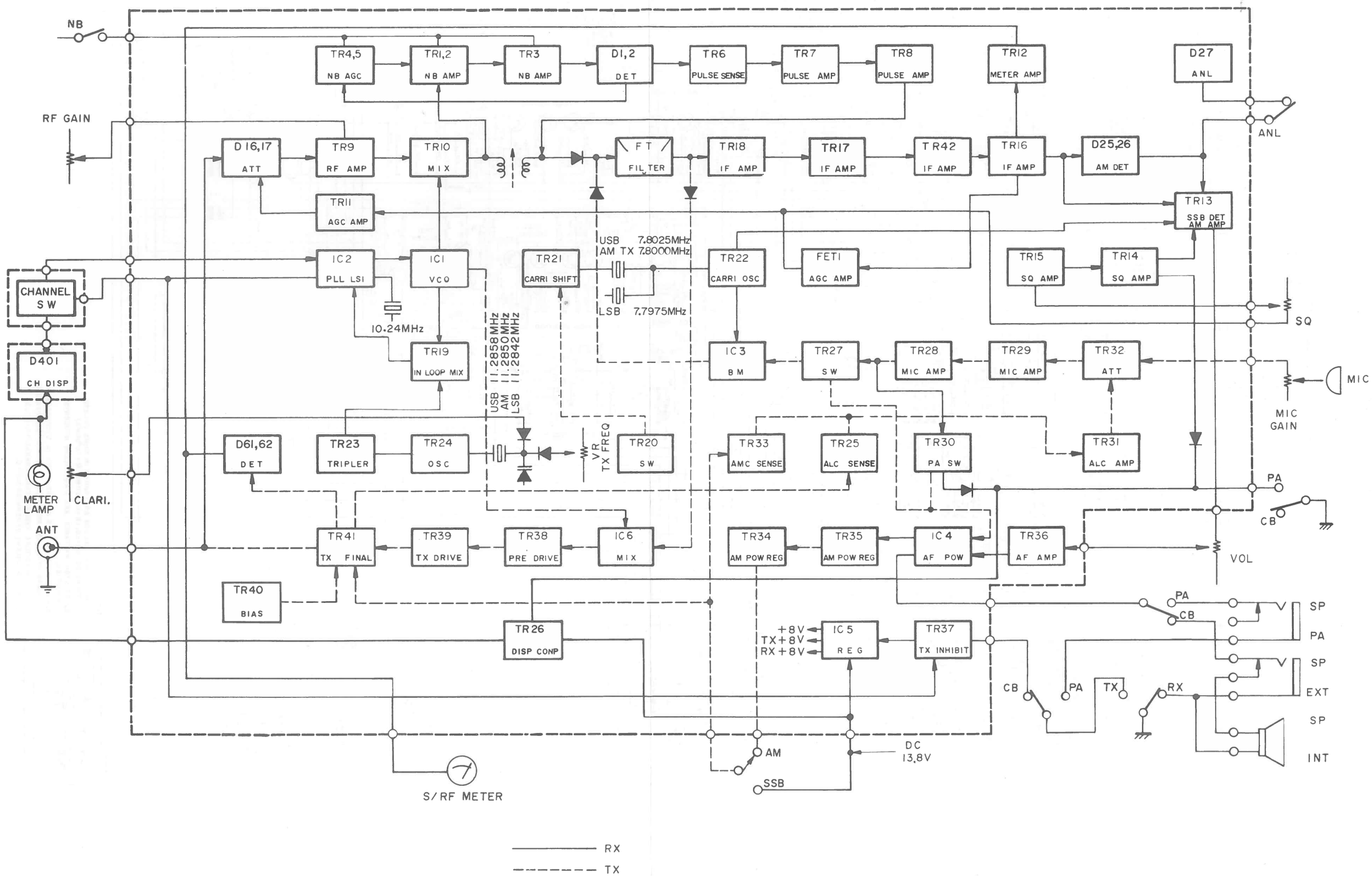
NB
TR4,5 NB AGC
TR1,2 NB AMP
TR3 NB AMP
D1,2 DET
TR6 PULSE SENSE
TR7 PULSE AMP
TR8 PULSE AMP
TR12 METER AMP
D27 ANL
ANL
RF GAIN
D16,17 ATT
TR9 RF AMP
TR10 MIX
FT FILTER
TR18 IF AMP
TR17 IF AMP
TR42 IF AMP
TR16 IF AMP
D25,26 AM DET
TR11 AGC AMP
TR13 SSB DET AM AMP
USB 7.8025MHz
AM TX 7.8000MHz
LSB 7.7975MHz
IC2 PLL LSI
IC1 VCO
TR21 CARRI SHIFT
TR22 CARRI OSC
FET1 AGC AMP
TR15 SQ AMP
TR14 SQ AMP
CHANNEL SW
10.24MHz
SQ
D401 CH DISP
TR19 IN LOOP MIX
USB 11.2858MHz
AM 11.2850MHz
LSB 11.2842MHz
IC3 BM
TR27 SW
TR28 MIC AMP
TR29 MIC AMP
TR32 ATT
MIC
MIC GAIN
D61,62 DET
TR23 TRIPLER
TR24 OSC
VR TX FREQ
TR20 SW
TR33 AMC SENSE
TR25 ALC SENSE
TR30 PA SW
TR31 ALC AMP
PA
METER LAMP
CLARI.
CB
ANT
TR41 TX FINAL
TR39 TX DRIVE
TR38 PRE DRIVE
IC6 MIX
TR34 AM POW REG
TR35 AM POW REG
IC4 AF POW
TR36 AF AMP
VOL
TR40 BIAS
PA
CB
SP
PA
SP
EXT
SP
INT
TR26 DISP CONP
+8V
TX+8V
RX+8V
IC5 REG
TR37 TX INHIBIT
CB
PA
TX
RX
AM
SSB
DC 13.8V
S/RF METER
RX
TX

REF. NO.	PART NO.	DESCRIPTION	MFR PART CODE
COILS AND TRANSFORMERS			
L1	J611526	Coil, LA038	LLAY038001
L2	J611509	Coil, LA179	LLAY179001
L3	J611531	Coil, LA255	LLAY255001
L4	J611538	Coil, LA263	LLAY263001
L5	J611537	Coil, LA262	LLAY262001
L6	J611514	Coil, LA257	LLAY257001
L7	J611533	Coil, LA258	LLAY258001
L8	J611534	Coil, LA259	LLAY259001
L9	J611535	Coil, LA260	LLAY260001
L10	J611536	Coil, LA261	LLAY261001
L11, 15, 16, 21, 22, 23, 24	J611525	Inductor, Molded, LZ012 470 μH	LLZY012004
L12, 25	J611524	Inductor, Molded, LZ012 100 μH	LLZY012001
L13	J611510	Coil, LA216	LLAY216001
L14	J611528	Coil, LA195	LLAY195001
L17, 19	J611511	Coil, LA217	LLAY217001
L18	J611532	Coil, LA256	LLAY256001
L20	J611512	Coil, LA218	LLAY218001
L26	J611529	Coil, LA219	LLAY219001
L27	J611527	Coil, LA160	LLAY160001
L28	J611530	Coil, LA220	LLAY220001
L29	J611513	Coil, LA254	LLAY254001
L30	J611520	Coil, LD-096	LLDY096001
L31, 34	J611518	Coil, LD-087	LLDY087001
L32	J611522	Coil, LD-101	LLDY101001
L33, 35	J611521	Coil, LD-098	LLDY098001
L36, 39	J611515	Coil, LC-019	LLCY019001
L37, 38	J611523	Coil, LE-051	LLEY051001
L51, 52, 404, 405	J611517	Coil, LD-077	LLDY077001
L401, 402	J611516	Coil, LD-013	LLDY013001
L403	J611519	Coil, LD-089	LLDY089001
T1	J62996	Transformer, AF Choke, TF151	TTFY151001

REF. NO.	PART NO.	DESCRIPTION	MFR PART CODE
SEMI-FIXED & VARIABLE RESISTORS			
VR1, 5, 7	J25941	Variable Resistor, 10 k ohm	RRVY182005
VR2	J25938	Variable Resistor, 1 k ohm	RRVY182002
VR3	J25939	Variable Resistor, 3 k ohm	RRVY182012
VR6, 9	J25940	Variable Resistor, 5 k ohm	RRVY182004
VR8	J25937	Variable Resistor, 500 ohm	RRVY182001
VR10	J25942	Variable Resistor, 100 k ohm	RRVY182008
VR401	J25945	Variable Resistor, 100 k ohm, Squelch (Inc. Nut/Washer)	RRVY126001
VR402	J25946	Variable Resistor, 20 k ohm, Clarifier (Inc. Nut/Washer)	RRVY139001
VR403 & S402	J25943	Variable Resistor, 10 k ohm, Volume (Inc. Nut/Washer W/S402)	RRVY008001
VR404	J25944	Variable Resistor, 10 k ohm, (RF Gain (Inc. Nut/Washer)	RRVY324001
CRYSTALS			
X1	J241295	Crystal, OSC. 10.24 MHz	QQXY077001
X2	J241297	Crystal, OSC. 7.8025 MHz	QQXY084001
X3	J241296	Crystal, OSC. 7.7975 MHz	QQXY083001
X4	J241298	Crystal, OSC. 11.2858 MHz	QQXY106001
FIXED RESISTORS			
R1, 160	CHF5318	Resistor, Carbon, Formed VERT, 18 k ohm 1/8W ±5%	RUBZ181834
R2, 17, 19, 23, 34, 61, 62, 82, 108, 109, 134, 159	CHF5233	Resistor, Carbon, Formed VERT, 3.3 k ohm 1/8W ±5%	RUBZ183324
R3, 59, 89, 126, 140	CHF5147	Resistor, Carbon, Formed VERT, 470 ohm 1/8W ±5%	RUBZ184714
R4, 8, 15, 175, 180, 403	CHF5133	Resistor, Carbon, Formed VERT, 330 ohm 1/8W ±5%	RUBZ183314
R5, 57, 60, 118, 149, 176	CHF5122	Resistor, Carbon, Formed VERT, 220 ohm 1/8W ±5%	RUBZ182214
R6, 30, 63, 70, 72, 107, 415	CHF5347	Resistor, Carbon, Formed VERT, 47 k ohm 1/8W ±5%	RUBZ184734
R7, 33	CHF5227	Resistor, Carbon, Formed VERT, 2.7 k ohm 1/8W ±5%	RUBZ182724
R9, 22, 67, 133	CHF5068	Resistor, Carbon, Formed VERT, 68 ohm 1/8W ±5%	RUBZ186804
R10, 74	CHF5447	Resistor, Carbon, Axial Lead, 470 k ohm 1/8W ±5%	RPBZ184744
R11, 24	CHF5447	Resistor, Carbon, Formed VERT, 470 k ohm 1/8W ±5%	RUBZ184744
R12, 13, 14, 16, 27, 31, 38, 45, 49, 80, 105, 106, 111, 116, 121, 147, 151, 152, 155, 161, 163	CHF5310	Resistor, Carbon, Formed VERT, 10 k ohm 1/8W ±5%	RUBZ181034
R18	CHF5218	Resistor, Carbon, Axial Lead, 1.8 k ohm 1/8W ±5%	RPBZ181824
R20, 35, 87, 124, 137	CHF5210	Resistor, Carbon, Axial Lead, 1 k ohm 1/8W ±5%	RPBZ181024
R21, 42, 123, 138, 418	CHF5247	Resistor, Carbon, Formed VERT, 4.7 k ohm 1/8W ±5%	RUBZ184724
R25, 153	CHF5218	Resistor, Carbon, Formed VERT, 1.8 k ohm 1/8W ±5%	RUBZ181824
R26, 47, 48, 51, 90, 95, 145, 174, 179, 182, 183, 191	CHF5110	Resistor, Carbon, Formed VERT, 100 ohm 1/8W ±5%	RUBZ181014

REF. NO.	PART NO.	DESCRIPTION	MFR PART CODE
FIXED RESISTORS (Continued)			
R28, 101, 401, 402, 404, 405, 406, 407, 408, 409, 410, 411, 412, 413	CHF5168	Resistor, Carbon, Formed VERT, 680 ohm 1/8W ±5%	RUBZ186814
R29	CHF5347	Resistor, Carbon, Axial Lead, 47 k ohm 1/8W ±5%	RPBZ184734
R32, 36, 39, 44, 68, 99, 104, 119, 135, 141, 146, 150, 164, 165, 197, 192	CHF5210	Resistor, Carbon, Formed VERT, 1 k ohm 1/8W ±5%	RUBZ181024
R37, 85, 86, 100, 110, 122, 148	CHF5222	Resistor, Carbon, Formed VERT, 2.2 k ohm 1/8W ±5%	RUBZ182224
R43, 131	CHF5239	Resistor, Carbon, Formed VERT, 3.9 k ohm 1/8W ±5%	RUBZ183924
R46, 50	CHF5418	Resistor, Carbon, Formed VERT, 180 k ohm 1/8W ±5%	RUBZ181844
R52, 54, 117, 166	CHF5215	Resistor, Carbon, Axial Lead, 1.5 k ohm 1/8W ±5%	RUBZ181524
R53, 64, 88, 129, 144, 178	CHF5215	Resistor, Carbon, Formed VERT, 1.5 k ohm 1/8W ±5%	RUBZ181524
R55, 196, 416	CHF5139	Resistor, Carbon, Formed VERT, 390 ohm 1/8W ±5%	RUBZ183914
R56, 75, 84, 98	CHF5310	Resistor, Carbon, Axial Lead, 10 k ohm 1/8W ±5%	RPBZ181034
R58	CHF53R3	Resistor, Carbon, Formed VERT, 3.3 ohm 1/8W ±5%	RUBZ183394
R65, 97, 136, 158	CHF5156	Resistor, Carbon, Formed VERT, 560 ohm 1/8W ±5%	RUBZ185614
R66, 130	CHF5115	Resistor, Carbon, Formed VERT, 150 ohm 1/8W ±5%	RUBZ181514
R69, 71, 79, 103	CHF5410	Resistor, Carbon, Formed VERT, 100 k ohm 1/8W ±5%	RUBZ181044
R81	CHF5268	Resistor, Carbon, Formed VERT, 6.8 k ohm 1/8W ±5%	RUBZ186824
R83, 181	CHF5100	Resistor, Carbon, Axial Lead, 100 ohm 1/8W ±5%	RPBZ181014
R91	CHF5115	Resistor, Carbon, Axial Lead, 150 ohm 1/8W ±5%	RPBZ181514
R93	CHF5468	Resistor, Carbon, Formed VERT, 680 k ohm 1/8W ±5%	RUBZ186844
R94	CHF5422	Resistor, Carbon, Formed VERT, 220 k ohm 1/8W ±5%	RUBZ182244
R96	CHF5427	Resistor, Carbon, Formed VERT, 270 k ohm 1/8W ±5%	RUBZ182744
R102, 114	CHF5315	Resistor, Carbon, Formed VERT, 15 k ohm 1/8W ±5%	RUBZ181534
R112	CHF5333	Resistor, Carbon, Formed VERT, 33 k ohm 1/8W ±5%	RUBZ183334
R113	CHF5522	Resistor, Carbon, Axial Lead, 2.2M ohm 1/8W ±5%	RPBZ182254
R115	CHF5510	Resistor, Carbon, Formed VERT, 1M ohm 1/8W ±5%	RUBZ181054
R120, 128, 142, 198	CHF5322	Resistor, Carbon, Formed VERT, 22 k ohm 1/8W ±5%	RUBZ182234
R125	MC1110	Resistor, Metal Film, 100 ohm 1W ±10%	RSJZ101015
R127	CHF5412	Resistor, Carbon, Formed VERT, 120 k ohm 1/8W ±5%	RUBZ181244
R139	MC1122	Resistor, Metal Film, 220 ohm 1W ±10%	RSJZ102215
R154	CHF5256	Resistor, Carbon, Formed VERT, 5.6 k ohm 1/8W ±5%	RUBZ185624
R156	CBF5110	Resistor, Carbon, Axial Lead, 100 ohm 1/2W ±5%	RPBZ121014
R157	CHF5322	Resistor, Carbon, Axial Lead, 22 k ohm 1/8W ±5%	RPBZ182234
R162	CHF5282	Resistor, Carbon, Formed VERT, 8.2 k ohm 1/8W ±5%	RUBZ188224
R172	CHF5010	Resistor, Carbon, Formed VERT, 10 ohm 1/8W ±5%	RUBZ181004
R173	CHF5127	Resistor, Carbon, Axial Lead, 270 ohm 1/4W ±5%	RPBZ142714
R177	CHF5012	Resistor, Carbon, Formed VERT, 12 ohm 1/8W ±5%	RUBZ181204
R190	CBF5310	Resistor, Carbon, Axial Lead, 10 k ohm 1/2W ±5%	RPBZ121034
R414	CHF5182	Resistor, Carbon, Formed VERT, 820 ohm 1/8W ±5%	RUBZ188214
R417	CHF5227	Resistor, Carbon, Axial Lead, 2.7 k ohm 1/8W ±5%	RPBZ182724

REF. NO.	PART NO.	DESCRIPTION	MFR PART CODE

CAPACITORS

The code indicates variation of capacitance with temperature:
YA = ±5%, **YB** = ±10%, **YD** = +20 -30%, **YE** = +20 -50%, **YF** = +30 -80%, (-25 ~ +85°C), **ZF** = +30 -80% (-10 ~ +70°C), **CH** = 0±60ppm/°C, **RH** = -220ppm/°C±60ppm/°C, **CJ** = 0±120ppm/°C, **RJ** = -220ppm/°C±120ppm/°C, **TH** = -470ppm/°C±60ppm/°C, **UJ** = -750ppm/°C±120ppm/°C, **SL** = +350ppm/°C ~ -1000ppm/°C

C1, 2, 4, 5, 11, 14, 18, 50, 51, 52, 54, 55, 56, 57, 63, 92, 108, 196, 197, 205, 207, 208, 401, 402	CC .022U 50V 20	0.022MF +70% ~ -20% YF 50V Ceramic	CKGZ812230
C3, 6, 9, 31, 32, 33, 36, 41, 42, 44, 46, 79, 87, 98, 118, 193, 195, 403, 404, 405, 406, 407	CC .001U 50V 20	0.001MF ±20% YD 50V Ceramic	CKDZ811026
C7, 59, 128, 169	CM .047U 50V 10	0.047MF ±10% 50V Mylar	CQMZ814735
C8	CC 82P 50V 10 SL	82PF ±10% SL 50V Ceramic	CCGZ818205
C10, 12, 171	CC 330P 50V 10 SL	330PF ±10% SL 50V Ceramic	CCGZ813315
C13, 28, 120, 126, 166, 174	CM .1U 50V 10	0.1MF ±10% 50V Mylar	CQMZ811045
C15, 16, 93, 151	CE 2.2U 25V 75-10	2.2MF +70% ~ -20% 25V Electrolytic	CELZ512290
C17, 104, 117, 144	CE .47U 50V 75-10	0.47MF +70% ~ -20% 50V Electrolytic	CELZ814780
C19	CT .22U 25V20	0.22MF ±20% 25V Tantalum	CSEZ512286
C21	CC 5P 50V .25P SL	5PF ±0.25PF SL 50V Ceramic	CCGZ815091
C22	CC 3P 50V .25P SL	3PF ±0.25PF SL 50V Ceramic	CCGZ813091
C23, 149, 162	CC 1P 50V .25P SL	1PF ±0.25PF SL 50V Ceramic	CCGZ811091
C24, 26, 85, 103, 124, 170, 177	CE 47U 10V 75-10	47MF +70% ~ -20% 10V Electrolytic	CELZ114700
C25	CM .033U 50V 10	0.033MF ±10% 50V Mylar	CQMZ813335
C27	CE 22U 10V 75-10	22MF + 70% ~ -20% 10V Electrolytic	CELZ112200
C30	CC 12P 50V 10 SL	12PF ±10% SL 50V Ceramic	CCGZ811205
C34, 60, 70, 130, 161, 173	CE 1U 50V 75-10	1MF +70% ~ -20% 50V Electrolytic	CELZ811090
C35, 37, 39, 168, 175, 176, 178, 180, 181, 190, 191, 192, 194, 201, 203	CC .0047U 50V 20	0.0047MF ±20% YD 50V Ceramic	CKDZ814726
C38, 88	CC 4P 50V .25P SL	4PF ±0.25PF SL 50V Ceramic	CCGZ814091
C40, 45, 49, 184	CC 2P 50V .25P NPO	2PF ±0.25PF CJ 50V Ceramic	CCBZ812091
C43, 111	CC 100P 50V 10 SL	100PF ±10% SL 50V Ceramic	CCGZ811015
C47	CC 56P 50V 10 SL	56PF ±10% SL 50V Ceramic	CCGZ815605
C48, 179	CC 33P 50V 10 SL	33PF ±10% SL 50V Ceramic	CCGZ813305
C53, 75, 82, 84, 86, 99, 109, 112, 115, 132, 133, 134, 135, 139, 140, 141, 148, 202, 204, 209	CC .01U 50V 20	0.01MF ±20% YD 50V Ceramic	CKDZ811036
C61	CM .022U 50V 10	0.022MF ±10% 50V Mylar	CQMZ812235
C62	CC 27P 50V 10 SL	27PF ± 10% SL 50V Ceramic	CCGZ812705
C64, 101, 125	CM .001U 50V 10	0.001MF ±10% 50V Mylar	CQMZ811025
C65	CT 1U 25V 20	1MF ±20% 25V Tantalum	CSEZ511096
C67, 97, 100, 121, 185	CM .01U 50V 10	0.01MF ±10% 50V Mylar	CQMZ811035

REF. NO.	PART NO.	DESCRIPTION	MFR PART CODE
CAPACITORS (Continued)			
C68, 113	CC 18P 50V 10 NPO	18 PF ±10% CH 50V Ceramic	CCCZ811805
C69	CC 12P 50V 5 NPO	12PF ±10% CH 50V Ceramic	CCCZ811205
C71	CE 220U 6.3V 50-10	220MF +70% ~ -20% 6.3V Electrolytic	CELZ902210
C73, 74	CT 2.2U 25V 20	2.2MF ±20% 25V Tantalum	CSEZ512296
C76, 77, 164	CC 47P 50V 10 SL	47PF ±10% SL 50V Ceramic	CCGZ814705
C78	CT 4.7U 10V 20	4.7MF ±20% 10V Tantalum	CSEZ114796
C83	CC 15P 50V 10 NPO	15PF ±10% CH 50V Ceramic	CCCZ811505
C89	CC 270P 50V 10 SL	270PF ±10% SL 50V Ceramic	CCGZ812715
C91, 96	CM .0068U 50V 10	0.0068MF ±10% 50V Mylar	CQMZ816825
C94	CE 100U 6.3V 50-10	100MF +70% ~ -20% 6.3V Electrolytic	CELZ901010
C95	CM .0033U 50V 10	0.0033MF ±10% 50V Mylar	CQMZ813325
C102, 131, 146	CE 10U 16V 75-10	10MF +70% ~ -20% 16V Electrolytic	CELZ311000
C107	CE 1000U 10V 50-10	1000MF +70% ~ -20% 10V Electrolytic	CELZ111020
C110, 137, 172	CC 470P 50V 10 SL	470PF ±10% SL 50V Ceramic	CCGZ814715
C114, 150	CC 10P 50V .5P NPO	10PF ±0.5PF CJ 50V Ceramic	CCBZ811002
C116	CE 220U 10V 50-10	220MF +70% ~ -20% 10V Electrolytic	CELZ112210
C122	CE 4.7U 25V 75-10	4.7MF +70% ~ -20% 25V Electrolytic	CELZ514790
C123	CT 22U 6.3V 20	22MF ±20% 6.3V Tantalum	CSEZ902206
C127	CE 470U 10V 50-10	470MF +70% ~ -20% 10V Electrolytic	CELZ114710
C129, 145	CE 10U 25V 50-10	10MF +70% ~ -20% 25V Electrolytic	CELZ511000
C136	CC 10P 50V .5P SL	10PF ±0.5PF SL 50V Ceramic	CCGZ811002
C138	CC 220P 50V 10 SL	220PF ±10% SL 50V Ceramic	CCGZ812215
C147	CE 1000U 25V 50-10	1000MF +70% ~ -20% 25V Electrolytic	CELZ511020
C158	CC 68P 50V 10 SL	68PF ±10% SL 50V Ceramic	CCGZ816805
C159	CC 39P 50V 10 SL	39PF ±10% SL 50V Ceramic	CCGZ813905
C160	CC 180P 50V 10 SL	180PF ±10% SL 50V Ceramic	CCGZ811815
C163	CC 390P 50V 10 SL	390PF ±10% SL 50V Ceramic	CCGZ813915
C165, 183	CC 330P 50V 10 N750	330PF ±10% UJ 50V Ceramic	CCUZ813315
C167	CC 120P 50V 10 SL	120PF ±10% SL 50V Ceramic	CCGZ811215
C182	CC 47P 50V 5 NPO	47PF ±10% CH 50V Ceramic	CCCZ814705
C198	CC 18P 50V 10 SL	18PF ±10% SL 50V Ceramic	CCGZ811805
C199	CC .047U 50V 20	0.047MF +70% ~ -20% ZF 50V Ceramic	CKCZ814730
C206	CC .1U 25V 70-20	0.1MF +70% ~ -20% ZF 25V Ceramic	CKCZ511040
CT1,2,3	J35517	CV-028 20PF Trimmer	CCVY028004

REF. NO.	PART NO.	DESCRIPTION	MFR PART CODE
MISCELLANEOUS			
PC621	J56693	PC Board Assembly, Main	PCB534Z621
PC381	J56694	PC Board Assembly, Channel Display	PCB534Z381
PC583	J56695	PC Board Assembly, Channel Select	PCB534Z583
PC587	J56696	PC Board Assembly, ANL/NB, PA/CB Switches	PCB534Z587
PC389	J56697	PC Board Assembly, Mic Jack	PCB534Z389
FT1	J241299	Filter, Crystal, FL065	FFLY065001
S401	J12752	Rotary Switch, Channel Selector (Inc. Nut/Washer)	SSRY219001
S402	N.A. Separately	Switch, Power (Part of Ref. No. VR403)	
S403-1,2	J12751	Rotary Switch, Mode Selector (Inc. Nut/Washer)	SSRY233001
S404	J12753	Switch, PA/CB	SSWY110001
S405	J12754	Switch, NB/ANL	SSWY097001
SP401	S-SE 3½ IN8Z3W	Speaker, 3½", 3W, Magnet Wt. 14.5 grams	ASPY050001
M401	J13111	Signal/Power Meter (w/LAMP, PL401)	ZMTY097001
	J63394	Microphone	AMKY124001
J401,402	J63396	Jack, P.A., Ext. Speaker JK-089	JJKY089001
J403	J261014	Power Supply Socket, JK052	JJKY052001
J404	J63395	Jack, Microphone, JK104	JJKY104001
J405	J261013	Antenna Connector, JK035	JJKY035001
TP7, 8	J261015	Terminal, Check Point	JTPY027001
F401	312004	Fuse, 4A, 250V, Fast Acting	ZFSY014003
YD033	J261016	Insulator, TR34 YD-033	ZYDY033001
YD039	J261017	Insulator, IC4 YD-039	ZYDY039001
YD040	J261018	Insulator, IC5 YD-040	ZYDY040001
YY027	J261019	Insulator, TR39, 41 YY027	ZYYY027001
YY039	J381608	Bushing (Ceramic), TR39, 41	ZYYY036001
	J92135	Power Supply Cord (w/Fuse Holder) and Plug, P-401)	WZDZ070235
FC1	J92138	Flat Cable, WF-011	WWFY011105
FC2	J92136	Flat Cable, WF-005	WWFY005101
FC3	J92137	Flat Cable, WF-005	WWFY005102
P401	N.A. Separately	Plug, Power Supply Cord (Part of Power Supply Cord)	
PL401	J18607	Pilot Lamp, Signal/Power Meter	PL401-534Z

WARNING

Replacement or substitution of IC's, crystals, transistors, regulator diodes, or any other part of a specialized nature with parts other than those recommended by Craig may cause the operator to be in violation of the Type Acceptance requirements of Part 2 of the Rules.

FCC Rules require that ALL transmitter section adjustments, other than those supplied by Craig as operating controls, be made by or under the immediate supervision of the holder of an FCC First or Second Class Radio-Telephone Operator's License.

SPECIFICATIONS

GENERAL

CHANNELS	AM 40, LSB 40, USB 40
FREQUENCY RANGE	26.965 to 27.405 MHz
FREQUENCY STABILITY	±130 Hz
MICROPHONE	Dynamic type
POWER SOURCE	120 V, 60 Hz or 13.8 Vdc
CURRENT DRAIN: Transmit;	AM full modulation, 2.5 A
	SSB, 12 W PEP, 2.5 A
Receive;	Standby, 0.5 A
	Maximum audio output, 1.2 A

TRANSMITTER

RF POWER OUTPUT	AM, 4 W
	SSB, 12 W
FREQUENCY TOLERANCE	±0.003 % from -30 C to +50 C
SPURIOUS ATTENTUATION	60 dB minimum
OUTPUT IMPEDANCE	50 Ohm
FILTER CIRCUIT	Crystal lattice 7.8 MHz filter
CARRIER SUPPRESSION	50 dB
UNWANTED SIDEBAND SUPPRESSION	50 dB

RECEIVER

SENSITIVITY:	AM; Better than 0.5 uV for 10 dB (S+N)/N
	SSB; Better than 0.25 uV for 10 dB (S+N)/N
BANDWIDTH	6 KHz @ -6 dB
AGC	Change in audio output less than 10 dB from 5.0 uV to 1.0 V
SQUELCH	Adjustable, threshold less than 0.5 uV Tight, more than 250 uV
POWER OUTPUT	3 W at 10 % THD
IMAGE REJECTION	Better than 70 dB
IF REJECTION	Better than 90 dB
ADJACENT CHANNEL REJECTION	Better than 55 dB
IF FREQUENCY	AM: 7.8 MHz
	SSB: 7.8 MHz
CLARIFIER RANGE	AM: ±1250 Hz
	SSB: ∓1250 Hz
NOISE BLANKER	RF parallel gate type

P.A. SYSTEM

POWER OUTPUT	3 W

PACKAGING

CRAIG KEY No.	DESCRIPTION
L232001	Individual Carton
L201002	Styrofoam Set (L & R)
L132507	Microphone (Complete)
L201003	Mic Mounting Kit
L150396	Bracket, Mic Mounting
-----	RH Tapp Screw M3.5x8
-----	Star Washer M3.5
XFU004	Spare Fuse, 4A
4101033	D.C. Power Cord w/Plug

CABINET & CHASSIS

REF. No.	CRAIG KEY No.	DESCRIPTION
1	NSP	Cabinet Top
2	L103100	Wool Tack
3	L232010	Assy, Front Escutcheon
4	NSP	Plate, Sw Control Index
5	NSP	Plate, Control Board Index
6	NSP	Plate, TX/RX/CH 9 Ind
7	L201490	Speaker Dust Cloth
8	L201070	Optical Filter (Clock & Ch Display)
9	NSP	Cabinet Bottom

NOTE

Repair or adjustment of transmitter circuits must be under supervision of a person with first-or second-class radiotelephone license.
(Refer to FCC Rules and Regulations Part 95, Subpart C & D.)

The frequency of the transmitter should be checked periodically with a secondary frequency standard to insure proper and legal operation.

Best results will be obtained when adjusting the final RF output circuit if the antenna normally used is connected and the chassis is as nearly in the cabinet as possible.

Connect either 50-ohm dummy load or the normally used antenna system.

REF. No.	CRAIG KEY No.	DESCRIPTION
CABINET & CHASSIS (continued)		
10	L201800	Front Foot
11	L201801	Rear Foot
12	-----	PH Tapp Screw M3x14
13	-----	PH Tapp Screw M3x12
14	NSP	Holder, Push Sw Assy
15	NSP	Holder, Slide Sw Assy
16	L201396	Holding Brkt, CH Select Sw
17	NSP	Rear Panel
18	NSP	Main Chassis
19	NSP	Heat Sink
20	NSP	Heat Sink
21	NSP	Holder, Meter Lamp
22	L201395	Mtg Strap, Transformer
23	NSP	Escutcheon Mtg Brkt (R)
24	NSP	Escutcheon Mtg Brkt (L)
25	L201212	Square Nut M3
26	NSP	Rivet
27	3307079	Bushing, AC Cord
28	L103026	Knob, CHANNEL SELECT
29	L103027	Knob, VOL/TON/BND/CLAR/SWR Cont
30	L103028	Push Button, CLOCK SET Sw
31	L105026	Knob, CH 9 SQ/RF GAIN Cont
32	L105027	Knob, SQUELCH/MIC GAIN Cont
33	NSP	Model No./FCC/Serial No. Plate
34	L232231	Spacer, PCB Mounting
35	L201430	Cushion (Meter Top)
36	L201431	Cushion (Meter Bottom)
37	L201491	Dust Cloth, CH 9/ANL/PA Sw
38	L201492	Dust Cloth, MOD/SWR/CAL Sw
39	L105292	Spring Plate, SQUELCH/MIC Knob
40	L105291	Spring Plate, CH 9 SQ/RF Knob
41	L103291	Spring Plate, CH Select Knob
42	NSP	Heat Sink
43	NSP	Holder (R), Clock LED PCB
44	NSP	Holder (L), Clock LED PCB
45	L201330	Headphone Jack Bushing
47	L201232	Rubber Spacer, LED Mtg
48	-----	Plastic PH Screw M3x6
49	-----	FH Screw M3x6
50	-----	PH Screw M2x4
51	-----	PH Screw M2.6x4
52	-----	PH Screw M2.6x6
53	-----	PH Screw M2.6x10
54	-----	PH Screw M3x6
55	-----	PH Screw M3x10
56	-----	PH Screw M4x10
57	-----	PH Screw (Black) M3x8
58	-----	PH Screw (Black) M5x8
59	-----	PH Tapp Screw M3x6
60	-----	PH Tapp Screw M3x8
61	-----	PH Tapp Screw M3x6
62	-----	PH Tapp Screw M3x16
63	-----	Hex Nut M2.6
64	-----	Hex Nut M3
65	-----	Flange Nut M4
66	-----	Lock Washer M2.6
67	-----	Lock Washer M3
68	NSP	Label, Caution
69	NSP	Label, Caution
70	NSP	Label, Caution
C304	-----	Capacitor, 3300uF/35V
C147	-----	Capacitor, 1000uF/25V
D63	MV13YH	Varistor
D64	MV1Y	Varistor
D302	S5VB/10	Diode
D401	UR202	LED, DIGITAL CH DISPLAY
D402	TLR124	LED, TX Indicator
D403	TLR124	LED, CH 9 Indicator
D405	TLG124A	LED, RX Indicator
D413	TLR2077	LED, DIGITAL CLOCK DISPLAY
FH002	L201380	Fuse Holder
FT1	L132722	Assy, Crystal Filter
IC4	TA7222P	I.C. (AF POWER AMP)
IC5	MB3756	I.C. (VOLTAGE REGULATOR)
IC601	TM4801P	I.C. (CLOCK/LOGIC)
J401	4101034	Socket, PA Spkr Jack
J402	4101034	Socket, Ext Spkr Jack
J403	4101027	Socket, D.C. Power Connector
J404	L132607	Socket, Mic Connector
J405	L103607	Connector, Coaxial Antenna
J406	L201607	Socket, Headphone Jack
M401	L201605	Meter, RF PWR/SIGNAL
M402	L201604	Meter, MOD/SWR
PC311	L232516	PCB w/COMP., HEADPHONE JACK
PC401	L232517	PCB w/Comp., EXTERNAL SPKR
PC433	L201519	PCB w/Comp., LED CH DISPLAY
PC447	L232518	PCB w/Comp., CH SELECT SW
PC450	L232519	PCB w/Comp., MIC JACK
PC541	L201524	PCB w/Comp., LED CLOCK/LOGIC
PC547	L232520	PCB w/Comp., CH 9 SCAN
PC570	L232521	PCB w/Comp., POWER SUPPLY

REF. No.	CRAIG KEY No.	DESCRIPTION
CABINET & CHASSIS (continued)		
PC576	L232522	PCB w/Comp., LED (TX/RX/CH 9 Ind)
PC582	NSP	PCB w/Comp., MAIN
PC586	L232523	PCB w/Comp., D.C. FILTER
PC588	L232524	PCB Only, CLOCK PUSH SW Assy
PC589	L232525	PCB Only, SLIDE SW Assy
PL401	L201550	Pilot Lamp, RF/SIG Meter
PL402	L201550	Pilot Lamp, MOD/SWR Meter
S401	L232530	Rotary Sw, CHANNEL SELECT
S402	L201534	Push Sw, MANUAL POWER
S403	L132531	Rotary Sw, BAND SELECT
S404	L201530	Slide Sw, PA/CB SELECT
S405	L201530	Slide Sw, NB/ANL On/Off
S408	L201531	Slide Sw, MOD/CAL/SWR SELECT
S409	L201532	Slide Sw, AC/DC SELECT
S410	L201530	Slide Sw, CH 9 SCAN
S411	L201530	Slide Sw, CH 9 HOLD
S412	L201535	Push Sw, AUTO POWER SET
S413	L201535	Push Sw, CLOCK SET
S414	L201536	Push Sw, FAST SCAN
S415	L201536	Push Sw, SLOW SCAN
S416	L201536	Push Sw, HOLD
S417	L201534	Push Sw, AUTO POWER
SP401	L201702	Speaker, 16 Ohm/3W
SW181	L201533	Push Sw Assy (S402 & S412~17)
T401	L232641	POWER TRANSFORMER (TF145)
TR26	2SC1419	Transistor (REGULATOR)
TR39	2SC1306	Transistor (TX DRIVE)
TR41	2SC1969	Transistor (TX FINAL)
TR302	2SC1419	Transistor (REGULATOR)
TR303	2SD588	Transistor (REGULATOR)
TR304	2SC1419	Transistor (LED DRIVE)
VR359	L232570	Assy, Control
VR401	-----	VR 100K, SQUELCH Cont
VR408	-----	VR 100K, CH 9 SQ Cont
VR401	-----	VR 100K, SQUELCH (See VR359)
VR402	L132570	VR 20K, CLARIFIER Cont
VR403	L232571	VR 10K, VOLUME Cont
VR404	-----	VR 10K, RF GAIN (See VR416)
VR405	-----	VR 1K, MIC GAIN (See VR416)
VR406	L132571	VR 5K, SWR/CAL Cont
VR408	-----	VR 100K, CH 9 SQUELCH (See VR359)
VR409	L232571	VR 10K, TONE Cont
VR416	L132572	Assy, Control
VR404	-----	VR 10K, RF GAIN Cont
VR405	-----	VR 1K, MIC GAIN Cont
YD004	L232330	Bushing, Transistor Mtg
YD048	L232331	Bushing, Transistor Mtg
YY023	NSP	Clamp, Lead Wire
YY025	L201332	Bushing
YY027	NSP	Mica Insulation
YY036	L132330	Bushing, Transistor Mtg
YY049	L201381	Holder, Lead Wire
WZ022	3307099	A.C. Power Cord w/Plug

REF. No.	CRAIG KEY No.	DESCRIPTION
COILS, TRIMMERS & XFORMERS		
CT1,2,3	L132670	Trimmer Capacitor 20pF
FT1	L132722	Assy, Crystal Filter 7.8MHz (FL065)
FT2	L232722	Crystal Filter,7.8MHz(FL046)
L1	L132671	Trimmer (LA038)
L2	L132672	Trimmer (LA179)
L3	L132673	Trimmer (LA255)
L4	L132674	Trimmer (LA263)
L5	L132675	Trimmer (LA262)
L6	L132676	Trimmer (LA257)
L7	L132677	Trimmer (LA258)
L8	L132678	Trimmer (LA259)
L9	L132679	Trimmer (LA260)
L10	L132680	Trimmer (LA261)
L11	L132681	Inductor (470uH)
L12	L132682	Inductor (100uH)
L13	L132683	Trimmer (LA216)
L14	L132684	Trimmer (LA195)
L15,16	L132681	Inductor (470uH)
L17	L132685	Trimmer (LA217)
L18	L132686	Trimmer (LA256)
L19	L132685	Trimmer (LA217)
L20	L105671	Trimmer (LA218)
L21,22, 23,24	L132681	Inductor (470uH)
L25	L132682	Inductor (100uH)
L26	L132687	Trimmer (LA219)
L27	L132688	Trimmer (LA160)
L28	L132689	Trimmer (LA220)
L29	L132690	Trimmer (LA254)
L30	L132691	Coil (LD096)
L31	L104675	Coil (LD087)

COILS, TRIMMERS & XFORMERS (continued)

REF. No.	CRAIG KEY No.	DESCRIPTION
L32	L132692	Coil (LD101)
L33	L132693	Coil (LD098)
L34	L104675	Coil (LD087)
L35	L132693	Coil (LD098)
L36	L132694	Trimmer (LC019)
L37,38	L132695	Coil (LE051)
L39	L132694	Trimmer (LC019)
L40	L105670	Coil (LD113)
L51,52	L105672	Coil (LD077)
L401,402	L132696	Coil (LD013)
L403	L132697	Coil (LD089)
L404,405	L105672	Coil (LD077)
L406,408	L132697	Coil (LD089)
T401	L232641	POWER TRANSFORMER (TF145)

MISCELLANEOUS ELECTRICAL

REF. No.	CRAIG KEY No.	DESCRIPTION
F401	XFU004	Fuse, 4A
F402	XFU004	Fuse, 4A
J401	4101034	Socket, PA Spkr Jack
J402	4101034	Socket, Ext Spkr Jack
J403	4101027	Socket, D.C. Power Connector
J404	L132607	Socket, Mic Connector
J405	L103607	Connector, Coaxial Antenna
J406	L201607	Socket, Headphone Jack
M401	L201605	Meter, RF PWR/SIGNAL
M402	L201604	Meter, MOD/SWR
MIC1	L132507	Microphone (Complete)
P401	3307099	A.C. Power Plug w/Cord
P403	4101033	D.C. Power Plug w/Cord
PC311	L232516	PCB w/Comp., HEADPHONE JACK
PC401	L232517	PCB w/Comp., EXT SPKR JACK
PC433	L201519	PCB w/Comp., LED CH DISPLAY
PC447	L232518	PCB w/Comp., CH SELECT SW
PC450	L232519	PCB w/Comp., MIC JACK
PC541	L201524	PCB w/Comp., LED CLOCK/LOGIC
PC547	L232520	PCB w/Comp., CH 9 SCAN
PC570	L232521	PCB w/Comp., POWER SUPPLY
PC576	L232522	PCB w/Comp., TX/RX/CH 9 Ind LED
PC582	NSP	PCB w/Comp., MAIN
PC586	L232523	PCB w/Comp., D.C. FILTER
PC588	L232524	PCB Only, CLOCK PUSH SW Assy
PC589	L232525	PCB Only, SLIDE SW Assy
PL401	L201550	Pilot Lamp, RF/SIG Meter
PL402	L201550	Pilot Lamp, MOD/SWR Meter
S401	L232530	Rotary Sw, CHANNEL SELECT
S402	L201534	Push Sw, MANUAL POWER
S403	L132531	Rotary Sw, BAND SELECT
S404	L201530	Slide Sw, PA/CB SELECT
S405	L201530	Slide Sw, NB/ANL On/Off
S408	L201531	Slide Sw, MOD/CAL/SWR SELECT
S409	L201532	Slide Sw, AC/DC SELECT
S410	L201530	Slide Sw, CH 9 SCAN
S411	L201530	Slide Sw, CH 9 HOLD
SW181	L201533	Push Sw Assy, CLOCK CONTROL
S412	L201535	Push Sw, AUTO POWER SET
S413	L201535	Push Sw, CLOCK SET
S414	L201536	Push Sw, FAST SCAN
S415	L201536	Push Sw, SLOW SCAN
S416	L201536	Push Sw, HOLD
S417	L201534	Push Sw, AUTO POWER
S402	L201534	Push Sw, MANUAL POWER
SP401	L201702	Speaker, 16 Ohm/3W
SW181	L201533	Push Sw Assy,(S402&S412 17)
VR1	L105590	Semi-Fixed Res. 10K Ohm
VR3	L132591	Semi-Fixed Res. 3K Ohm
VR5	L105590	Semi-Fixed Res. 10K Ohm
VR7	L105590	Semi-Fixed Res. 10K Ohm
VR8	L104590	Semi-Fixed Res. 500 Ohm
VR9	H221593	Semi-Fixed Res. 5K Ohm
VR10	L132592	Semi-Fixed Res. 100K Ohm
VR12	L132592	Semi-Fixed Res. 100K Ohm
VR501	L232590	Semi-Fixed Res. 5K Ohm
VR502	L232591	Semi-Fixed Res. 1K Ohm
VR359	L232570	Assy, Control
VR401	-----	VR 100K, SQUELCH Cont
VR408	-----	VR 100K, CH 9 SQ Cont
VR401	-----	VR 100K, SQUELCH(See VR359)
VR402	L132570	VR 20K, CLARIFIER Cont
VR403	L232571	VR 10K, VOLUME Cont
VR404	-----	VR 10K, RF GAIN (See VR416)
VR405	-----	VR 1K, MIC GAIN(See VR416)
VR406	L132571	VR 5K, SWR/CAL Cont
VR408	-----	VR 100K, CH 9 SQ(See VR359)
VR409	L232571	VR 10K, TONE Cont
VR416	L132572	Assy, Control
VR404	-----	VR 10K, RF GAIN Cont
VR405	-----	VR 1K, MIC GAIN Cont
X1	L103722	Crystal, 10.240MHz
X2	L132723	Crystal, 7.8025MHz
X3	L132724	Crystal, 7.7975MHz
X4	L132725	Crystal, 11.2858MHz

SEMICONDUCTORS

REF. No.	CRAIG KEY No.	DESCRIPTION
D1,2,9,25, 26,45,65	1N60	Diode
D3,4,5,6, 7,8,10, 11,12,13, 14,18,19, 20,21,22, 23,24,27, 28,29,31, 32,33,34, 35,36,37, 38,39,40, 41,42,43, 44,45,46, 47,49,50, 51,52,53, 55,56,57, 61,62,69, 70,71,72, 305,502, 503,504, 505,506, 507,508, 509,510, 601	1S2075K	Diode
D16,17	MC301	Diode
D30	RD5.1EB2	Zener Diode
D54	1S2687D	Vari-Cap Diode
D58,59,501	1N60P	Diode
D63	MV13YH	Varistor
D64	MV1Y	Varistor
D301	RD6.2EB3	Zener Diode
D302	S5VB/10	Diode
D303	CZ092	Zener Diode
D401	UR202	LED, CHANNEL Indicator
D402	TLR124	LED, TX Indicator
D403	TLR124	LED, CH 9 (AUTO) Indicator
D405	TLG124A	LED, RX Indicator
D407	1N4003	Diode
D413	TLR2077	LED, CLOCK DIGITAL DISPLAY
FET1,501	2SK19	FET
IC1	UHIC070	I.C. (VCO)
IC2	UPD2824C	I.C. (PLL,LSI)
IC3	AN612	I.C. (BM)
IC4	TA7222P	I.C. (AF POWER AMP)
IC5	MB3756	I.C. (REG)
IC6	S042P	I.C. (MIX)
IC501	MB84011M	I.C. (CH 9 SCAN)
IC601	TM4801P	I.C. (CLOCK/LOGIC)
TR1,2,6, 10,12, 21,22, 24,25, 42	2SC710	Transistor
TR3,8,16	2SC1730	Transistor
TR4,5,11, 13,15, 20,27, 32,33, 35,37, 44,301, 501,502, 503,601	2SC711	Transistor
TR7,14,30, 31,45	2SA628	Transistor
TR9,	2SC1674	Transistor
TR17,18	2SC673	Transistor
TR19,23	2SC1675	Transistor
TR26,34, 302,304	2SC1419	Transistor
TR28	2SC945	Transistor
TR29,36	2SC1312	Transistor
TR38	2SC1973	Transistor
TR39	2SC1306	Transistor
TR40	2SC496	Transistor
TR41	2SC1969	Transistor
TR303	2SD588	Transistor
TR504	2SC2236	Transistor

NOTE: NSP Non Serviceable Part

SUBJECT TO CHANGE WITHOUT NOTICE. USE ALL AVAILABLE NUMBERS AND COMPLETE DESCRIPTION WHEN ORDERING,INCLUDING MODEL NUMBER

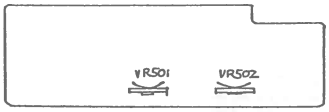

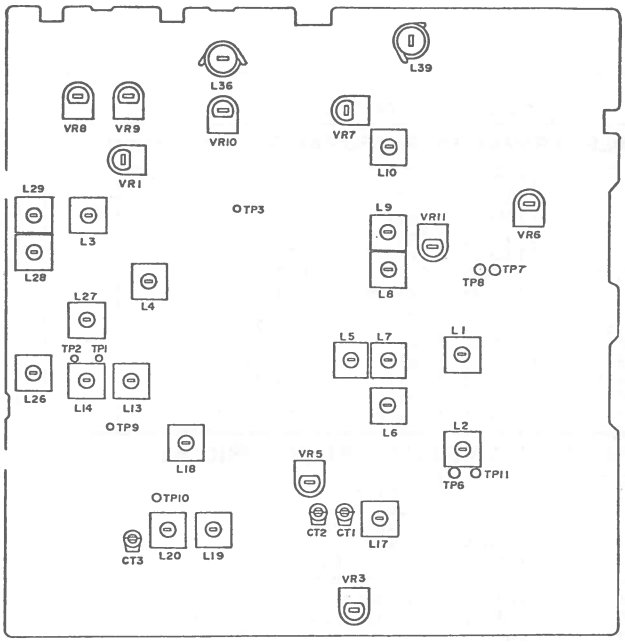

ALIGNMENT PROCEDURES

Test Equipment Required

a) OSCILLOSCOPE
b) D.C. VOLT METER
c) VTVM
d) RF WATTAGE METER
e) FREQUENCY COUNTER
f) 50 Ohm DUMMY ANTENNA LOAD
g) SIGNAL GENERATOR
h) D.C. CURRENT METER

TEST SET-UP

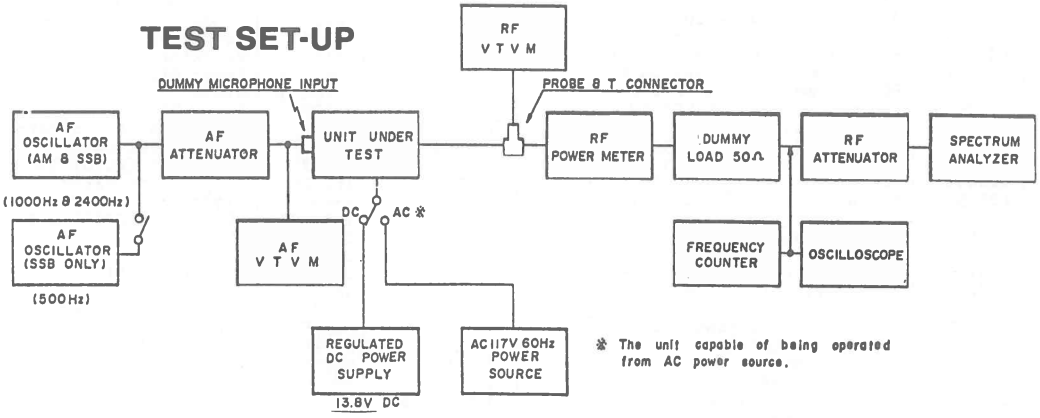

STEP	SET TO	CONNECTIONS	ADJUST	ADJUST FOR
RECEIVER				
1	Channel 19. Volume;MAX. Squelch;MIN. Mode;USB NB/ANL;OFF RF GAIN;MAX. PA-CB;CB	Signal Generator To Antenna Jack (J405) at 27.185MHz w/No Modulation. Output Level; 0.25 uV.	Frequency of Signal Generator.	AF Output Signal of 1,000Hz at Clarifier Control In Middle Position.
2	Same As Step 1	Same As Step 1.	L3,4,5,6, 7,8,9 & 10	Maximum AF Output Power.
3	Same As Step 1 except AM Mode.	Signal Generator To Antenna Jack (J405) at 1 KHz w/30% Modulation. Output Level; 1 uV.	L3	Maximum Indication on VTVM.
4	Same As Step 1	Signal Generator To Antenna Jack (J405) at 27.185MHz w/No Modulation. Output Level; 100 uV.	VR1	Reading of "9" on Signal Meter (M401).
5	Same As Step 1 except Squelch; MAXIMUM	Signal Generator To Antenna Jack (J405) at 27.185MHz w/No Modulation. Output Level; 1,000 uV.	VR502	Adjust VR2 Until AF Signal Observed.
6	Channel 19. Volume;MAX. Squelch;MIN. Mode;AM NB/ANL;ON RF GAIN;MAX.	Same As Step 5	L1,2	Maximum D.C. Voltage at TP8
7	Same As Step 3, Except: CH. 9 SQ;MAX. CH. 9 SCAN;ON.	Same As Step 5	VR501	Until CH. 9 SCAN Starts.

STEP	SET TO	CONNECTIONS	ADJUST	ADJUST FOR
P.L.L. CIRCUIT				
1	Channel 40. AM,RX Mode. Clarifier Cont. in middle position.	VTVM To TP10.	L18	Maximum Indication on VTVM.
2	Same As Step 1	D.C. Volt Meter To TP9.	L13	Approx. 6 V on D.C. Volt Meter.
3	Channel 19. USB,RX Mode.	VTVM To Secondary Of L14 (TP1) Local Out.	L14	Maximum Indication on VTVM.
4	Same As Step 3	Frequency Counter To Secondary Of L14 (TP1).	CT3	Reading of 34.9875MHz (± 20Hz) on Frequency Counter.
5	Channel 19. AM,RX Mode.	Same As Step 4.	L20	Same As Step 4.
6	Channel 19. LSB,RX Mode.	Same As Step 4.	L19	Same As Step 4.
7	Channel 19. LSB,TX Mode.	Same As Step 4.	VR3	Same As Step 4.
CARRIER OSCILLATOR				
1	Channel 19. USB,RX Mode.	Frequency Counter To The Base Of TR13 (TP3).	CT1	Reading of 7.8025MHz (+ 5Hz,-0Hz) on Frequency Counter.
2	Channel 19. LSB,RX Mode.	Same As Step 1.	CT2	Reading of 7.7975MHz (+0Hz,-5Hz) on Frequency Counter.
3	Channel 19. AM,TX Mode.	Same As Step 1.	L17	Reading of 7.8000MHz (± 5Hz) on Frequency Counter.
TRANSMITTER				
1	Channel 19. USB,TX Mode. No Modulation.	D.C. Current Meter To TP8.	VR8	Reading of 30 mA on Current Meter.
2	Same As Step 1	D.C. Current Meter To TP7	VR9	Reading of 60 mA on Current Meter.
3	Same As Step 1		VR5	Minimum Carrier Leakage.
4	Channel 19. LSB,TX Mode. No Modulation.		VR5	Same As Step 3.
5	Repeat Steps 3 & 4 To Obtain Approximately Equal Amount Of Carrier Leakage On Both LSB & USB Modes, While Still Maintaining Minimum Leakage On Both.			
6	Channel 19. USB,TX Mode. AF Input of 2-Tone, Approx. 500 mV to Mic Jack.	Set VR7 Fully Clockwise. VTVM To Antenna Jack (J405)	L26,27, 28,29 & 36	Maximum Indication on VTVM.
7	Same As Step 6 w/RF Output of Approx. 4 W Peak Envelope Power.	Same As Step 6.	L26,27, 28 & 29	Maximum Indication on VTVM
8	Channel 19. AM,TX Mode. AF Input of 500 mV to Mic Jack.	Same As Step 6.	L36	Maximum Indication on VTVM.
9	Same As Step 6	VTVM To Antenna Jack (J405)	VR7	RF Output Power of Approximately 11 W Peak Envelope Power.
10	Channel 19. AM,TX Mode. No Modulation.		VR6	RF Carrier Power of 3.8 W.
11	Same As Step 6		VR10	Correct Reading on Built-In Meter (M401).
12	Same As Step 6 w/Meter (M401) In SWR Position.	Same As Step 6.	VR12	Correct Reading on Built-In Meter (M401).

BLOCK DIAGRAM

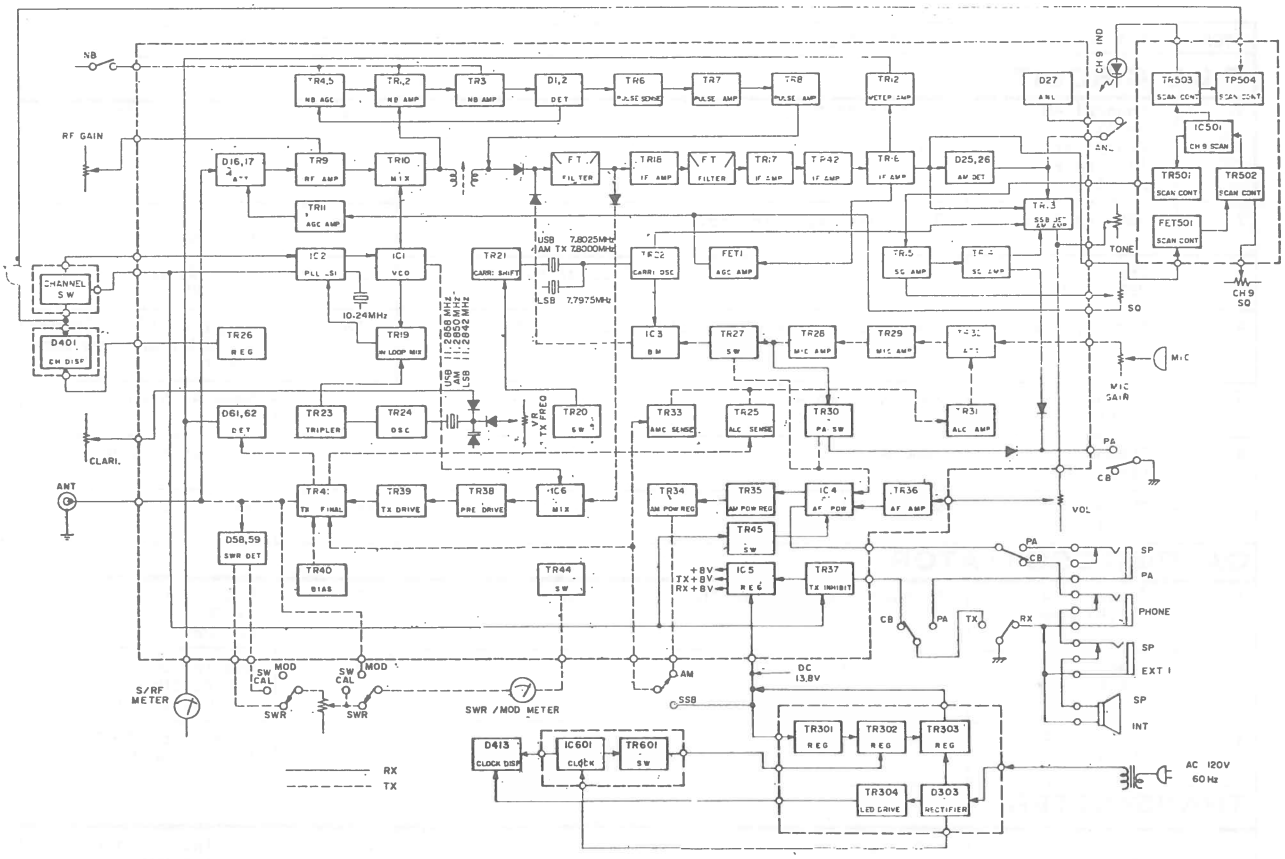

METER ADJUSTMENTS

(see Alignment Procedures)

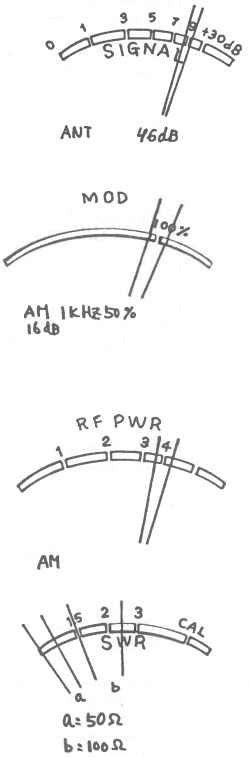

FREQUENCIES OF LOCAL OSCILLATORS and IF STAGE IN RECEIVING MODE.

CH No.	CHANNEL FREQUENCY	DIVIDE RATIO	LOCAL OSCILLATOR FREQUENIES AM MODE	USB MODE	LSB MODE	IF FREQUENCY
1	26.965 MHz	91	34.765 MHz	34.7675 MHz	34.7625 MHz	7.8 MHz
2	.975	92	.775	.7775	.7725	7.8
3	.985	93	.785	.7875	.7825	7.8
4	27.005	95	.805	.8075	.8025	7.8
5	.015	96	.815	.8175	.8125	7.8
6	.025	97	.825	.8275	.8225	7.8
7	.035	98	.835	.8375	.8325	7.8
8	.055	100	.855	.8575	.8525	7.8
9	.065	101	.865	.8675	.8625	7.8
10	.075	102	.875	.8775	.8725	7.8
11	.085	103	.885	.8875	.8725	7.8
12	.105	105	.905	.9075	.9025	7.8
13	.115	106	.915	.9175	.9125	7.8
14	.125	107	.925	.9275	.9225	7.8
15	.135	108	.935	.9375	.9325	7.8
16	.155	110	.955	.9575	.9525	7.8
17	.165	111	.965	.9675	.9625	7.8
18	.175	112	.975	.9775	.9725	7.8
19	.185	113	.985	.9875	.9825	7.8
20	.205	115	35.005	35.0075	35.0025	7.8
21	.215	116	.015	.0175	.0125	7.8
22	.225	117	.025	.0275	.0225	7.8
23	.255	120	.055	.0575	.0525	7.8
24	.235	118	.035	.0375	.0325	7.8
25	.245	119	.045	.0475	.0425	7.8
26	.265	121	.065	.0675	.0625	7.8
27	.275	122	.075	.0775	.0725	7.8
28	.285	123	.085	.0875	.0825	7.8
29	.295	124	.095	.0975	.0925	7.8
30	.305	125	.105	.1075	.1025	7.8
31	.315	126	.115	.1175	.1125	7.8
32	.325	127	.125	.1275	.1225	7.8
33	.335	128	.135	.1375	.1325	7.8
34	.345	129	.145	.1475	.1425	7.8
35	.355	130	.155	.1575	.1525	7.8
36	.365	131	.165	.1675	.1625	7.8
37	.375	132	.175	.1775	.1725	7.8
38	.385	133	.185	.1875	.1825	7.8
39	.395	134	.195	.1975	.1925	7.8
40	.405	135	.205	.2075	.2025	7.8

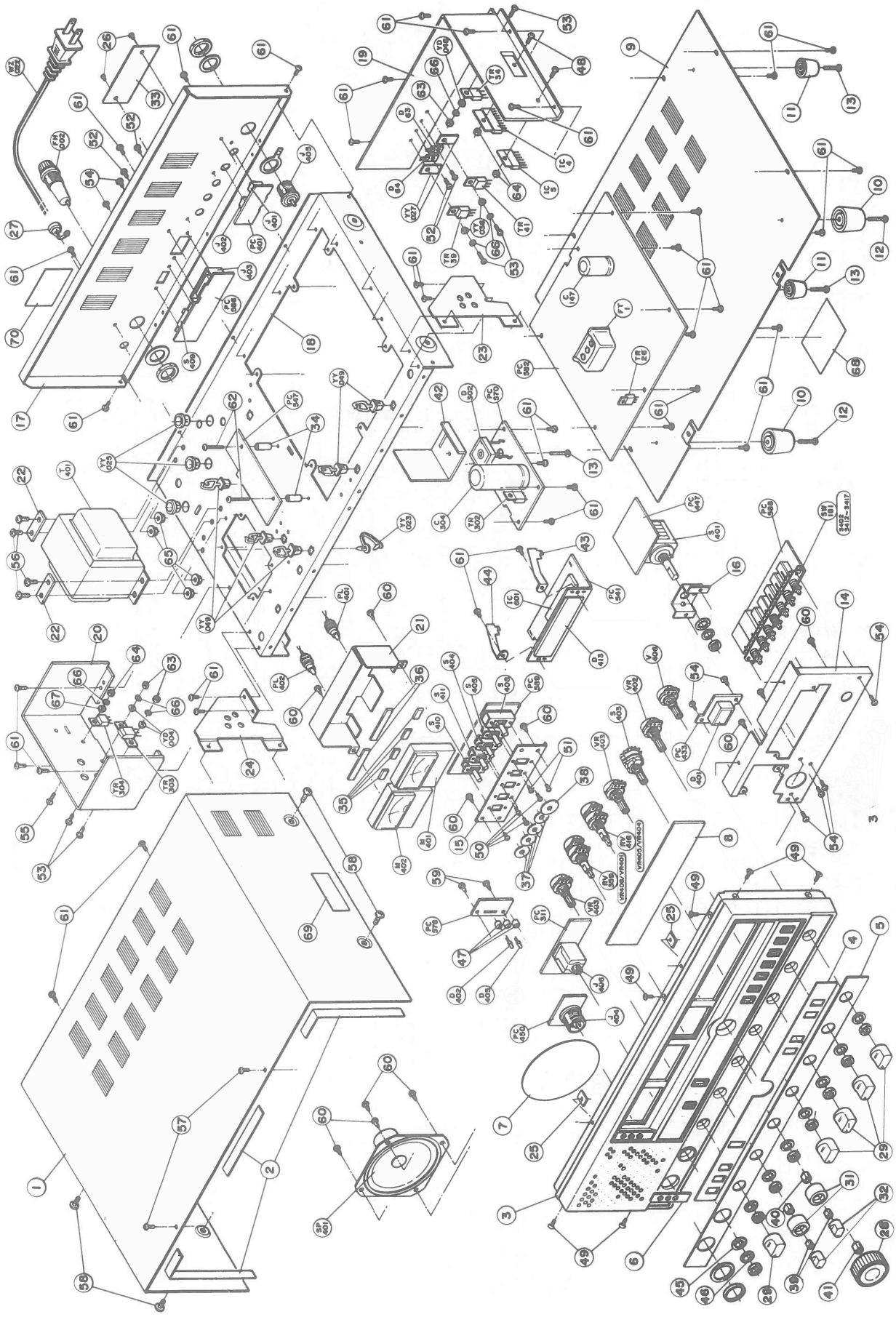

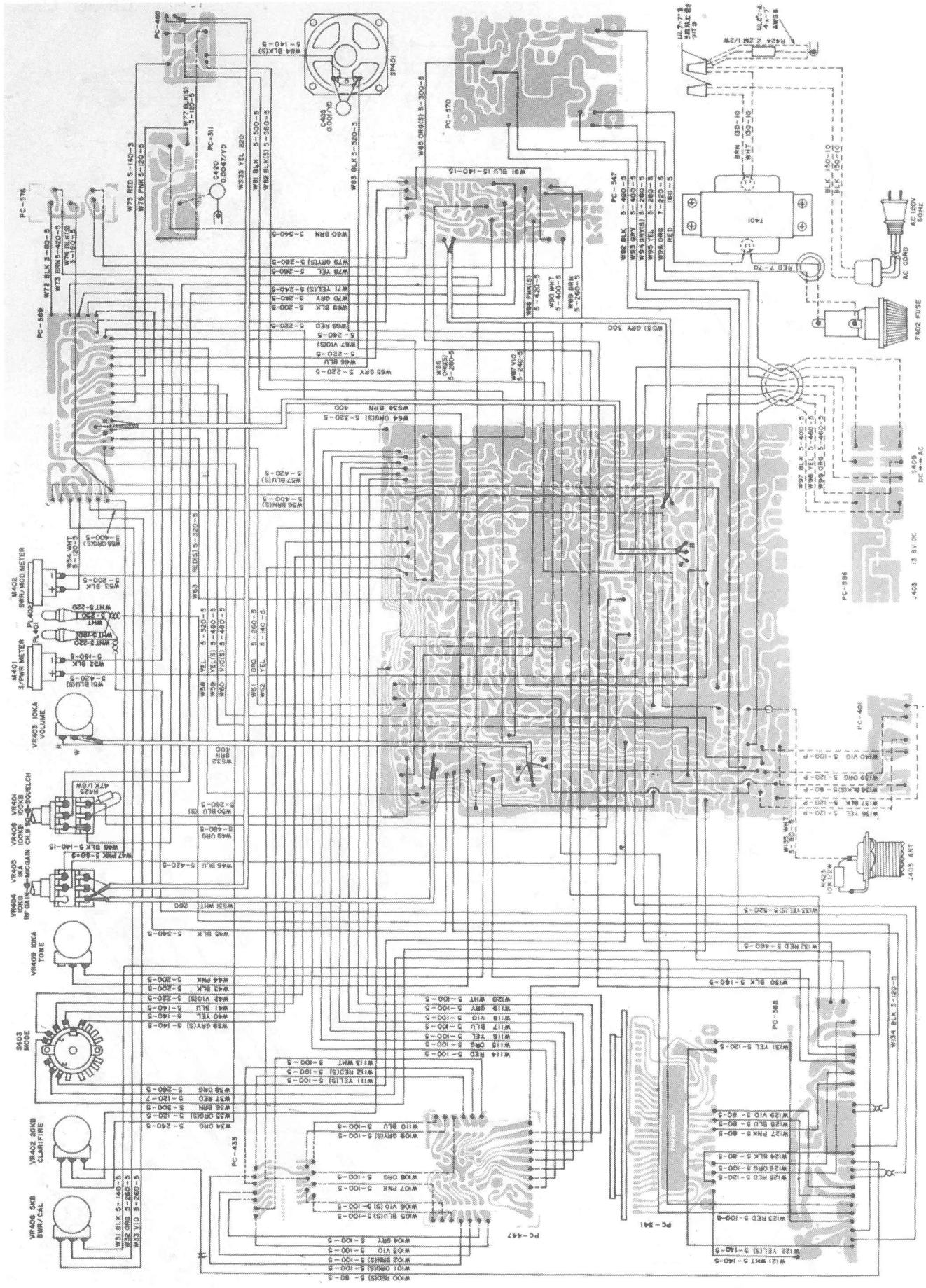
PC-460
SP401
PC-570
PC-547
T401
AC CORD
AC 120V 60Hz
F402 FUSE
J403 13.8V DC
S403 DC⟷AC
PC-586
PC-401
J403 ANT
PC-311
PC-576
PC-589
M402 SWR/MOD METER
M401 S/PWR METER
VR403 10KA VOLUME
VR401 100KB
VR409 100KB
VR405 10KA
VR404 10KB
VR409 10KA TONE
S402 MODE
VR402 20KB CLARIFIRE
VR406 5KB SWR/CAL
PC-433
PC-447
PC-368
PC-341

IC1	(RX)	(TX)
1	7.77	7.77
2	0	0
3	0	0
4	0	0
5	4.98	4.99
6	0	0
7	0	0
8	8.03	8.03
9	7.28	7.28
10	3.95	3.95

IC2	(RX)	(TX)
1	5.02	5.01
2	.51	.43
3	.50	.43
4	5.02	5.01
5	.50	.39
6	.50	.41
7	5.03	5.03
8	5.03	5.03
9	0	0
10	2.02	2.02
11	5.03	5.03
12	2.41	2.41
13	2.56	2.57
14	2.42	2.42
15	5.04	5.03
16	5.03	5.03
17	2.78	2.78
18	2.78	2.78
19	4.98	4.98
20	5.03	5.03
21	0	0
22	2.53	2.53

IC3	(RX)	(TX)
1	2.89	1.20
2	3.25	3.16
3	3.25	3.16
4	0	0
5	5.85	5.69
6	7.36	7.19
7	7.43	3.65

IC4	(RX)	(TX)
1	13.05	12.86
2	6.69	6.59
3	0	0
4	0	0
5	1.80	1.79
6	1.79	1.79
7	0	0
8	0	0
9	2.88	2.84
10	13.72	13.53

IC5	(RX)	(TX)
1	8.04	8.04
2	13.72	13.55
3	8.05	8.05
4	0	0
5	13.71	.03
6	8.04	.01
7	0	0
8	.11	8.02

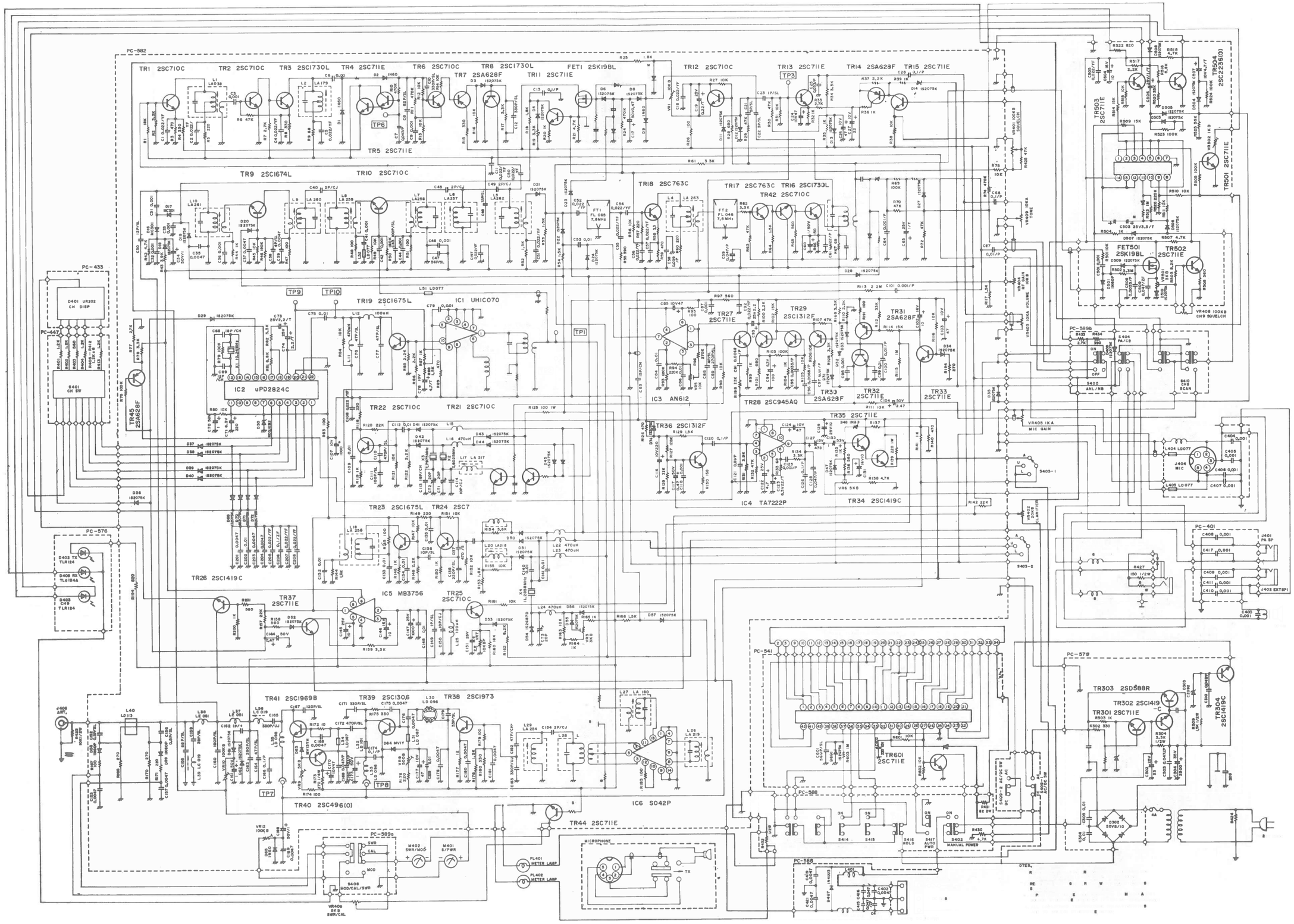

CRAIG L232

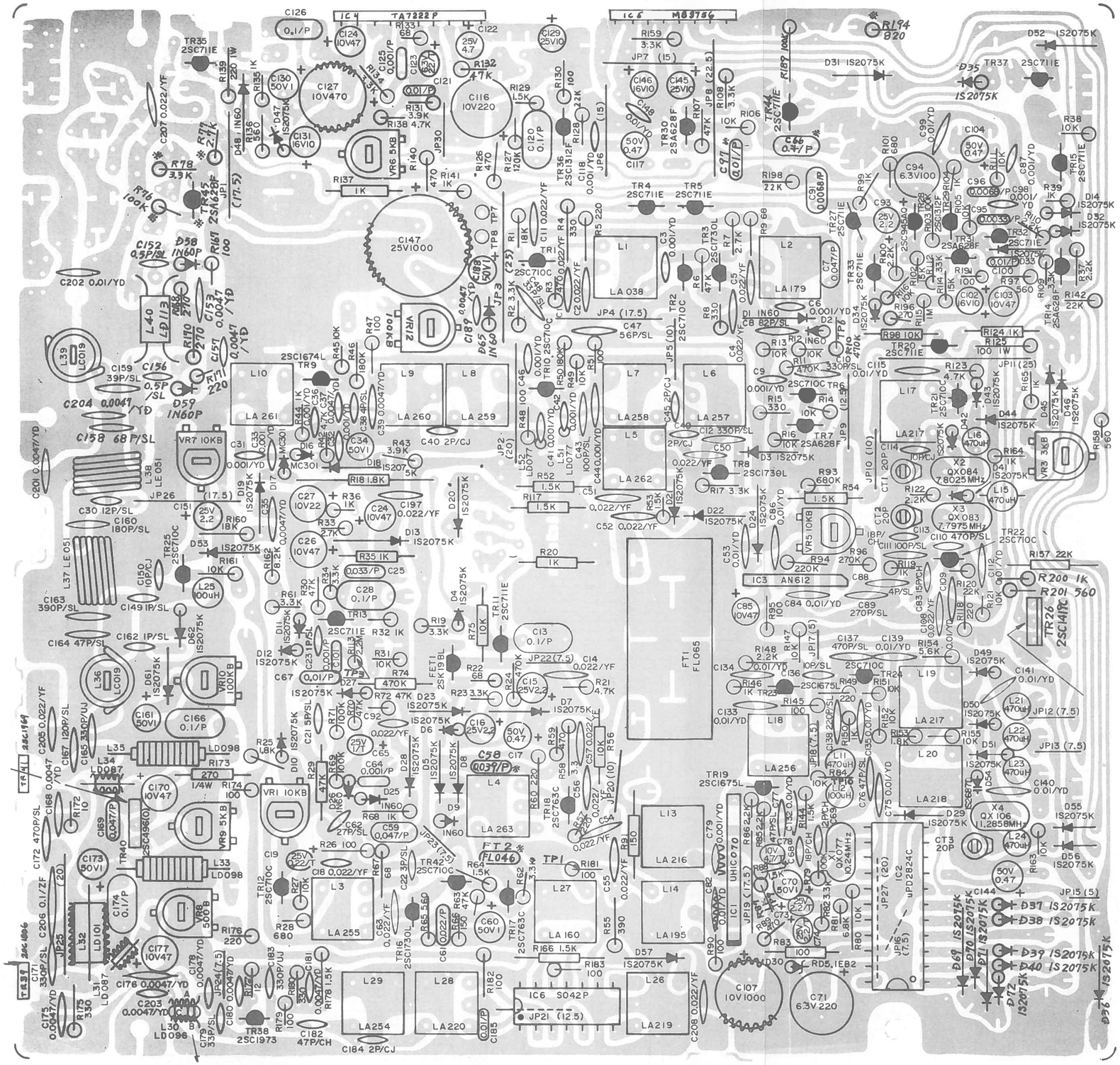

MODE	(RX)			(TX)		
	E	B	C	E	B	C
FET1	3.15	.21	8.05	.01	.01	.01
TR1	0	0	0	0	0	0
TR2	0	0	0	0	0	0
TR3	0	0	0	0	0	0
TR4	0	0	0	0	0	0
TR5	0	0	0	0	0	0
TR6	0	0	7.37	0	0	.91
TR7	8.05	7.38	0	.01	.78	-.03
TR8	0	0	0	0	0	0
TR9	.79	.10	8.03	0	0	.01
TR10	.07	.39	7.95	0	0	.01
TR11	2.45	3.15	2.45	0	.01	7.42
TR12	0	.49	7.97	.09	0	.01
TR13 (SQ)	1.68	1.38	7.90	0	0	0
(UNSQ)	.62	1.24	0			
TR14 (SQ)	8.06	7.28	0			
(UNSQ)	8.06	8.06	0	.01	.01	0
TR15 (SQ)	2.04	2.72	7.28			
(UNSQ)	.28	0	8.06	0	0	.01
TR16	3.22	2.46	6.92	0	0	.01
TR17	.73	0	3.94	0	0	.01
TR18	2.72	1.95	7.14	.01	0	.01
TR19	3.96	3.31	8.02	3.95	3.31	8.03
TR20	0	.03	.12	0	-.13	7.55
TR21	0	.12	.82	0	.71	0
TR22	1.56	2.24	7.65	1.64	2.25	7.63
TR23	1.43	.85	7.95	1.42	.85	7.95
TR24	3.46	2.82	7.34	3.45	2.82	7.34
TR25	1.48	0	6.33	2.19	0	6.33
TR26	4.55	5.12	13.74	4.55	5.12	13.57
TR27	0	.11	2.90	1.19	1.88	1.21
TR28	1.63	.99	3.41	1.56	.99	3.41
TR29	.07	.90	1.63	.07	.90	1.55
TR30	3.40	3.42	0	3.40	3.42	0
TR31	6.68	6.45	.67	6.68	6.44	0
TR32	0	.67	0	0	0	0
TR33	3.77	.69	6.34	1.63	.68	6.34
TR34	11.92	6.51	13.73	5.30	6.06	13.52
TR35	6.51	0	13.73	6.06	-.01	13.52
TR36	.25	.90	2.44	0	0	.01
TR37	5.02	5.32	13.74	0	.68	.03
TR38	0	0	.11	.53	1.24	8.00
TR39	0	.11	11.92	0	.67	4.96
TR40	.69	.11	.11	.69	1.39	.72
TR41	0	0	11.92	0	.40	4.39
TR42	3.22	3.94	8.05	0	.01	.01
TR44	0	.11	0	0	.54	-.04
TR45	3.61	5.46	0	0	1.36	0
TR301	6.20	6.83	14.90	6.15	6.71	14.97
TR302	14.37	14.90	0	14.38	14.97	19.58
TR303	13.74	14.37	0	13.67	14.38	19.58
TR304	8.45	9.06	0	8.40	9.01	19.58
*FET501	2.49	-.13	8.03	2.49	-.13	8.03
*TR501	0	0	8.04	0	0	.01
*TR502(SQ)	.93	1.60	.97			
(UNSQ)	0	0	8.03	0	1.67	.97
*TR503	0	.70	.05	0	.70	.05
*TR504	.04	0	8.04	.03	0	8.04
TR601	0	.65	0	0	.65	0

All voltages measured n CHANNEL 9 @ NO MODULATION.

CONTROL or SWITCH;		SET TO;
MIC GAIN Cont.	(VR405):	MECHANICAL CENTER
RF GAIN Cont.	(VR404):	MECHANICAL CENTER
TONE Cont	(VR409):	MECHANICAL CENTER
AM/USB/LSB Sw.	(S-403):	"AM" Position
CLARIFIER Cont.	(VR402):	MECHANICAL CENTER
SWR/CAL Cont.	(VR406):	MECHANICAL CENTER
SCAN Sw. (Ch.9)	(S-410):	"OFF" Position
HOLD Sw. (Ch.9)	(S-411):	"OFF" Position
CB/PA Sw.	(S-404):	"CB" Position
NB/ANL Sw.	(S-405):	"OFF" Position
MOD/CAL/SWR	(S-408):	"CAL" Position
MANUAL (POWER) Sw.	(S-402):	"ON" Position
AUTO (POWER) Sw.	(S-417):	"OFF" Position
AUTO (PWR SET) Sw.	(S-412):	"OFF" Position
CLOCK (SET) Sw.	(S-413):	"ON" Position
AC/DC Sw.	(S-409):	"AC" Position

* (CH. 9 SCAN & HOLD switches set to "ON" positions)

IC 601

PIN #	Voltages measured FROM	TO	FROM	TO
1	1.78	1.79	22 0	0
2	.26	.28	23 .25	.28
3	1.77	1.79	24 .26	.28
4	.27	.29	25 0	0
5	.25	.27	26 8.30	8.30
6	.25	.27	27 .65	.65
7	.27	.29	28 0	0
8	1.79	1.81	29 1.12	1.12
9	.27	.29	30 0	0
10	.25	.27	31 8.43	8.43
11	1.75	1.78	32 8.40	8.40
12	.24	.26	33 8.36	8.36
13	.27	.29	34 8.36	8.36
14	.27	.29	35 8.40	8.40
15	.27	.29	36 8.40	8.40
16	.27	.29	37 10.11	10.14
17	1.74	1.75	38 8.37	8.39
18	.27	.29	39 0	0
19	.25	.29	40 8.38	8.38
20	.27	.29	41 .32	2.67
21	.05	.05	42 .27	.29

NOTE: All of the voltages measured on IC601 were made with the clock's readout showing 12:00 PM. As the readout progresses to read 12:01 PM, adjust the CLOCK SET switch for a reading of 12:00 PM once again. NOTE also that most voltages on the voltage chart show a varying measurement of ±.02 to ±.04 volts. This informs you that when you measure the voltage on a particular pin of the I.C., it can, and will probably vary between the two voltages given on the chart.

PIN #	IC6 (RX)	(TX)	IC501* (SQ)	RX & TX (UNSQ)
1	0	0	.97	8.03
2	.11	7.77	7.82	7.82
3	.11	7.77	0	8.03
4	0	0	0	0
5	.11	7.77	7.82	7.82
6	0	0	7.82	7.82
7	.11	2.81	0	0
8	.11	2.81	7.78	7.78
9	0	0	0	0
10	0	1.44	7.82	7.82
11	-.37	1.37	8.03	8.03
12	0	1.42	0	0
13	-.39	1.36	0	0
14	0	0	8.03	8.03

* (Voltages of IC501 measured with Channel 9 SCAN & HOLD switches "ON".

SPECIFICATIONS

General

Frequency Range: 40-Channels AM; 80-Channels SSB: 26.965 to 27.405MHz
Frequency Stability: ±.005% from-30° C(-22° F) to +50°C (122°F)

Receiver System: Single conversion superheterodyne with dual gate MOSFET R.F. amp, FET mixer, crystal IF filter, and integrated circuit IF system.

Input Voltage:
CM550: 13.8VDC ±20%: Neg. Ground
CB555: 120VAC 60Hz (13.8VDC ±20%: Neg. Ground)
Shock and Vibration: Exceeds EIA standard RS382.

Dimensions:
CM550: 2.6" high x 7.1" wide x 9.4" deep (6.6cm x 18cm x 23.8cm).
CB555: 4.62" high x 12" wide x 9.62" deep (11.7 cm x 30.5 cm x 24.4 cm).
Weight:
CM550: 4 lbs. 10oz.
CB555: 9 lbs. 14oz.

● Transmitter

R.F. Power Output:
CM550: At 13.8VDC SSB - 12 watts P.E.P. max; AM-4 watts max.
CB555: At 120VAC SSB - 12 watts P.E.P. max; AM-4 watts max.
R.F. Harmonic Attenuation (T.V.I. Suppression): More than 70dB down.
Audio Frequency Response: +1 to-10dB, 300 to 2700Hz.
Microphone Sensitivity: 26mV ±4dB at knee of compression
Modulation Limiting: 85% to 100% modulation for inputs up to 40dB above mic sensitivity.
FCC Designator:
CM550: CB1137
CB555: CB1138

● Receiver

Sensitivity: AM .5uV; SSB .25uV
Squelch Sensitivity: Less than .5uV AM; .2uV SSB at threshold
Adjacent Channel Selectivity: More than 60dB down at ±10KHz
Cross Modulation Rejection: More than 70dB down ±50KHz
RF Blocking Protection: More than 70dB down at +50KHz
Spurious Rejection: 60dB
Image Rejection: 70dB
Clarifier Range: ±1350Hz
Intermediate Frequency: 10.7MHz
Automatic Gain Control (AGC): Less than 6dB audio rise with signal levels of .5 to 200,000uV.
Audio Distortion: Less than 10% @ 3W.
Extender: High sensitivity, antenna sampling impulse noise blanker w/automatic level control
Rated Audio Power Output: 3W

WARRANTY

The AM/SSB Mobile & the AM/SSB Base Station covered in this service manual is warranted by Motorola Inc. for a period of 90 days from date of purchase. For complete warranty information refer to "Limited Warranty & Service Booklet" - Part No. 68P40152R02-0.

NOTE

Repair or adjustment of transmitter circuits must be under supervision of a person with first-or second-class radiotelephone license.
(Refer to FCC Rules and Regulations Part 95, Subpart C & D.)

The frequency of the transmitter should be checked periodically with a secondary frequency standard to insure proper and legal operation.

Best results will be obtained when adjusting the final RF output circuit if the antenna normally used is connected and the chassis is as nearly in the cabinet as possible.

Connect either 50-ohm dummy load or the normally used antenna system.

PHASE LOCK-LOOP SECTION (P.L.L.)

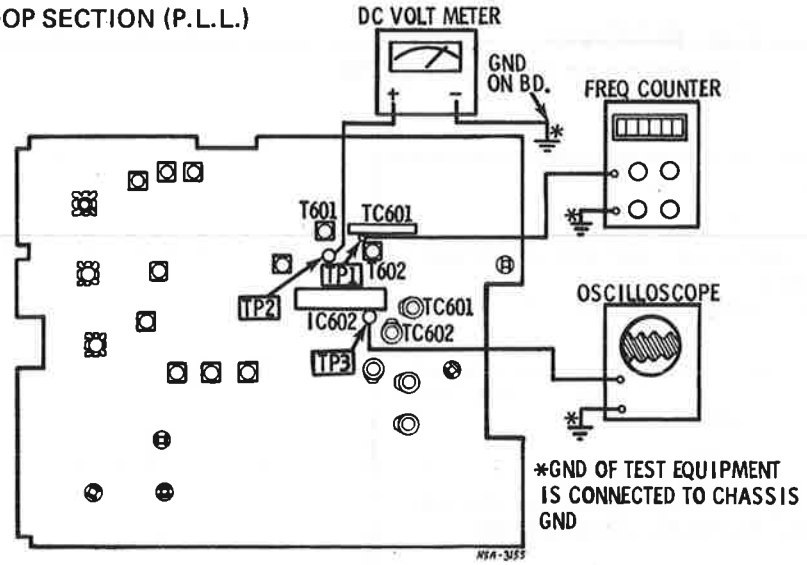

TEST SET-UP DIAGRAM & ALIGNMENT POINTS LOCATION

STEP	CONTROL SETTING	TEST EQUIPMENT CONNECTION	ADJUST	REMARKS
1	Set Selector to Channel 1			
2.	Mic: "Receive" Clarifier: At detent Mode sw: "AM" Volume, RF gain, Squelch } Optional	Connect freq. counter to TP1 (pin no. 3 of IC601)	T601	Adjust for approx. 37.66MHz reading on freq. counter
3	Same as step 2	Connect oscilloscope to TP3 (pin no. 17 or IC602)	T602	Adjust for max. sig. on oscilloscope
4	Same as step 2	Connect D.C. volt meter to TP2 (L601)	T601	Adjust for 2.5VDC ±.1V, reading on D.C. voltmeter
5	Same as step 2	Same as step no. 1	TC602	Adjust for 37.663MHz, ±20Hz, reading on freq. counter
6	Mic: "Receive" Clarifier: At detent Mode sw: "LSB" Volume, RF Gain, Squelch } Optional	Same as step no. 1	TC601	Adjust for 37.66MHz, ±20Hz, reading on frequency counter
7	Mic: "Receive" Clarifier: At detent Mode sw: "USB" Volume, RF Gain, Squelch } Optional	Same as step no. 1		Check 37.665MHz, ±20Hz, reading on freq. counter

SINGLE SIDE BAND GENERATOR SECTION (SSB — USB, LSB)

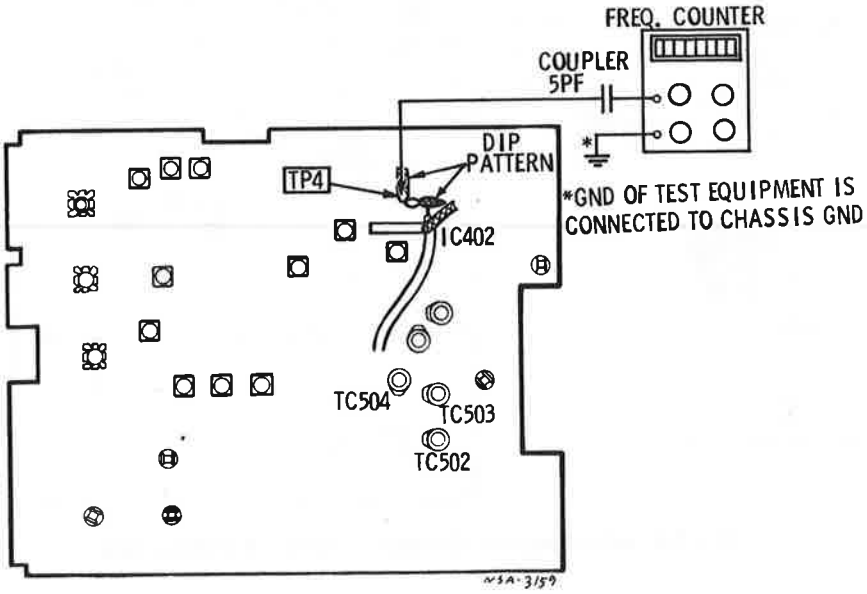

TEST SET-UP DIAGRAM & ALIGNMENT POINT LOCATION

STEP	CONTROL SETTING	TEST EQUIPMENT CONNECTION	ADJUST	REMARKS
1	Set Selector to channel no. 1		TC503	Set "AM" mode trimmer to mid position
2	Control setting — Mic: "Receive" Clarifier: At detent Mode sw: "LSB" Volume, RF Gain, Squelch } Optional	Connect frequency counter to TP4 (pin no. 8 of IC402)	TC504	Adjust trimmer for 10.695MHz, ±20Hz, reading on freq. counter
3	Mic: "Receive" Clarifier: At detent Mode sw: "USB" Volume, RF Gain, Squelch } Optional	Same as step 2	TC502	Adjust trimmer for 10.7MHz, ±20Hz, reading on freq. counter
4	Mic: "Transmit" (no input) Clarifier: At detent Mode sw: (AM) Volume, RF Gain, Squelch } Optional	Same as step 2 & 3	TC503	Adjust trimmer for 26.965MHz, ±20Hz, reading on freq. counter
5		Same as step 2, 3 & 4	TC504 TC502 TC503	Recheck steps 2, 3 &4 For frequency Stability

TRANSMITTER MIXER & RF POWER AMPLIFIER SECTION

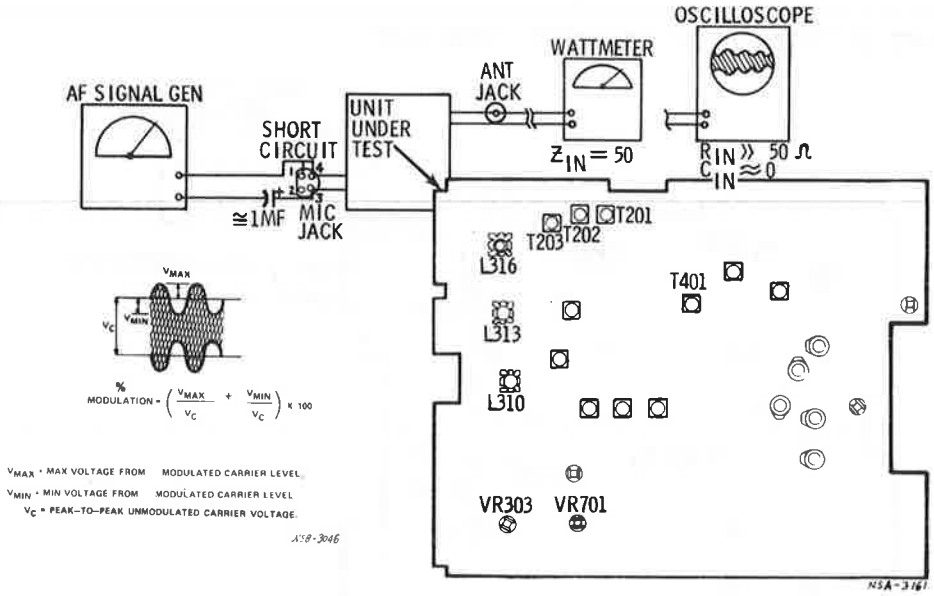

TEST SET-UP DIAGRAM ALIGNMENT POINTS LOCATION

STEP	TEST CONDITIONS	TEST EQUIPMENT CONNECTION	ADJUST	REMARKS
1	Set Selector to channel 16			
2	Control setting: Clarifier (VR601): At detent Squelch (VR401): Open ALC (VR303): Full Clockwise AMC (VR701): Full Clockwise RF Gain (VR101) } Optional VOL (VR702) } Optional Mode sw (S904): "USB"			
3	Freq: 1kHz Output level: 126mv/600Ω (20mv + 16dB)	a. Connect "AF" signal generator to Mic jack b. Connect wattmeter to ant jack	L310 L313 L316 T201 T202 T203 T401	Tune for max. indication on wattmeter
4	Same as step 3	Same as step 3	VR303	Adjust for 11w indication on wattmeter
5	Mode sw (S904): "AM" Freq: 1kHz	a. Connect oscilloscope to antenna jack b. Connect "AF" signal generator to Mic jack	Output level of AF signal generator	Adjust AF signal generator for 50% modulation
6	Freq: 1kHz – "AF" signal generator's level raised 16dB	a. Same as step 3 b. Same as step 5	VR701	Adjust for 85% modulation

LEVEL METER SECTION

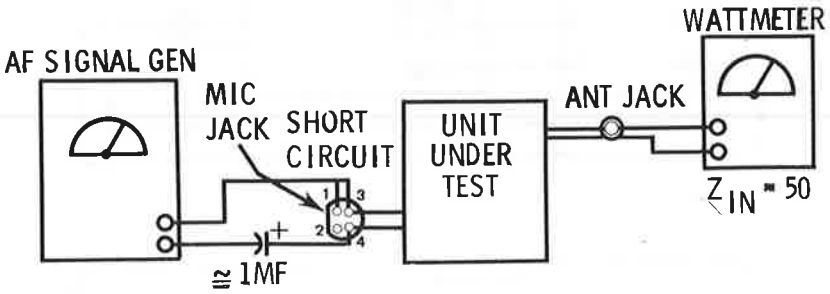

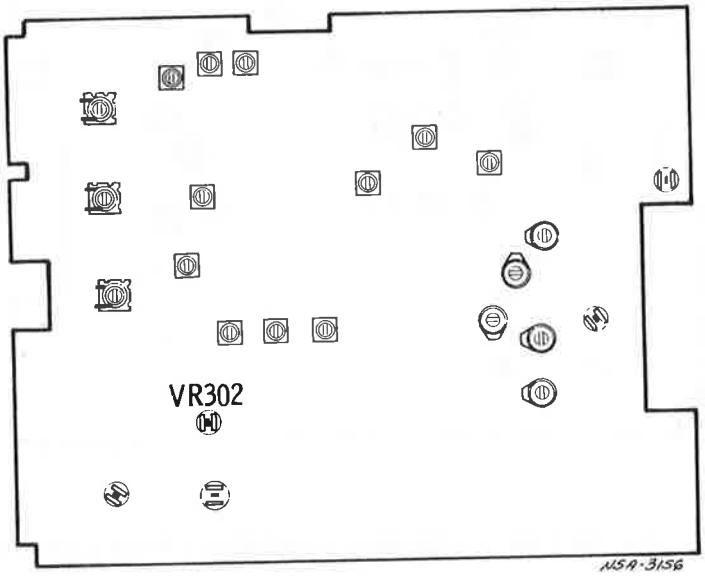

TEST SET-UP DIAGRAM & ALIGNMENT POINT LOCATION

STEP	CONTROL SETTING	TEST EQUIPMENT CONNECTION	ADJUST	REMARKS
1	Clarifier (VR601): At detent Squelch (VR401): Open Mode sw (S904): "LSB" RF Gain (VR101) } Optional Volume (VR702) } Optional	a. Connect "AF" signal generator to Mic jack b. Connect watt meter to Ant jack	"AF" sig. gen	Set for 4 watt output reading on wattmeter
2	Same as step No. 1	Same as step No. 1	VR302	Adjust for left edge of red zone on Level Meter (M301)
3	Mode SW (S904): "AM"	Same as step No. 1		Check Level Meter (M301) to see that it indicates in red zone

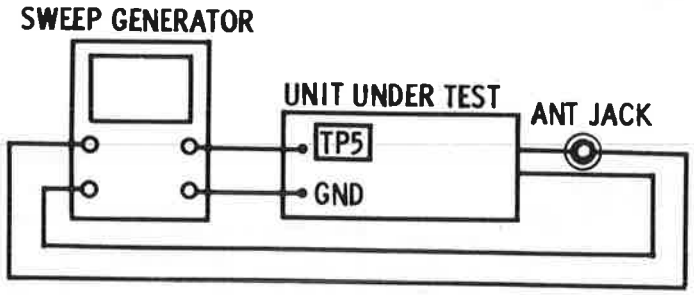

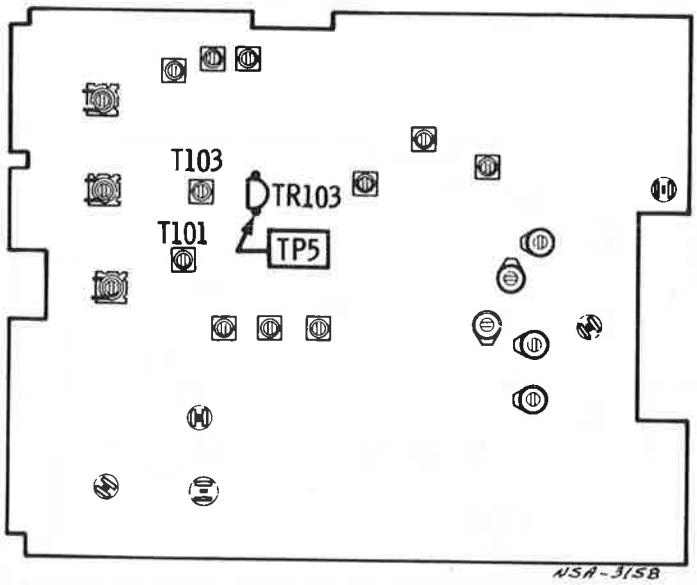

TEST SET-UP DIAGRAM & ALIGNMENT POINT LOCATION

STEP	TEST CONDITIONS	TEST EQUIPMENT CONNECTIONS	ADJUST	REMARKS
1	Control setting — Mic: "Receive" Mode SW, RF Gain, Squelch, Volume, Clarifier } Optional Input signal: 100μV @24MHz	a. Connect a sweep generator to antenna jack b. Connect oscilloscope to TP5 (base of TR103 - 2SC1815)	T101 T103	Tune for maximum signal on sweep generator (at 24MHz)

RF AMP –

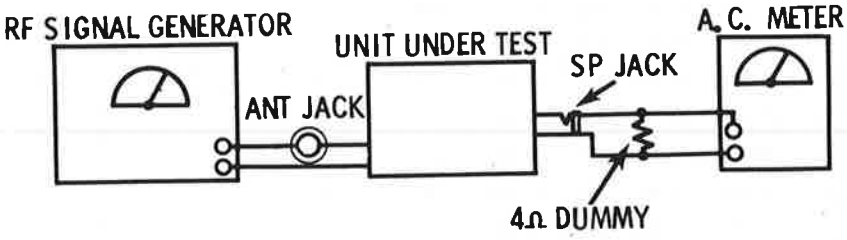

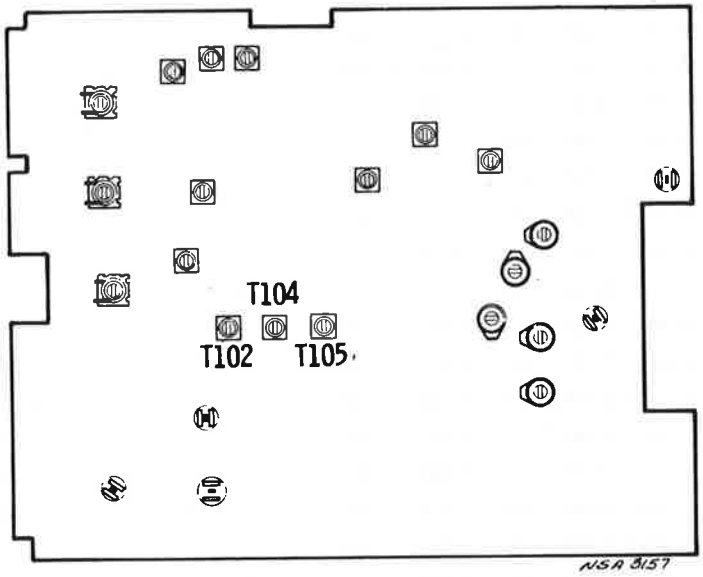

TEST SET-UP DIAGRAM & ALIGNMENT POINT LOCATION

STEP	TEST CONDITIONS	TEST EQUIPMENT CONNECTIONS	ADJUST	REMARKS
1	Control setting – Tuner – ch. 20 – peak radio to gen. freq. Mic: "Receive" Clarifier: At detent Mode sw: "AM" Volume: Max. (CW) RF Gain: Max (CW) Squelch: Open RF signal: 0.5uV	a. Connect RF signal generator to Ant Jack – (ch. 20 – 27.205MHz) b. Connect A.C. meter to speaker terminal	T102 T104 T105	a. Adjust generator output for min signal deflection on A.C. meter. b. Tune for max deflection on A.C. meter

"PLL" CHANNEL FREQUENCIES & PROGRAM SWITCH CLOSURE

		USB		LSB		PROGRAM CODE						
CHAN	FREQ	F_{VCO}	N	F_{VCO}	N	P_0	P_1	P_2	P_3	P_4	P_5	P_6
1	26.965	37.665	365	37.660	364							
2	26.975	37.675	367	37.670	366		0					
3	26.985	37.685	369	37.680	368			0				
4	27.005	37.705	373	37.700	372				0			
5	27.015	37.715	375	37.710	374		0		0			
6	27.025	37.725	377	37.720	376			0	0			
7	27.035	37.735	379	37.730	378		0	0	0			
8	27.055	37.755	383	37.750	382		0			0		
9	27.065	37.765	385	37.760	384			0		0		
10	27.075	37.775	387	37.770	386		0	0		0		
11	27.085	37.785	389	37.780	388				0	0		
12	27.105	37.805	393	37.800	392			0	0	0		
13	27.115	37.815	395	37.810	394		0	0	0	0		
14	27.125	37.825	397	37.820	396						0	
15	27.135	37.835	399	37.830	398		0				0	
16	27.155	37.855	403	37.850	402		0	0			0	
17	27.165	37.865	405	37.860	404				0		0	
18	27.175	37.875	407	37.870	406		0		0		0	
19	27.185	37.885	409	37.880	408			0	0		0	
20	27.205	37.905	413	37.900	412					0	0	
21	27.215	37.915	415	37.910	414		0			0	0	
22	27.225	37.925	417	37.920	416			0		0	0	
23	27.255	37.955	423	37.950	422		0		0	0	0	
24	27.235	37.935	419	37.930	418		0	0		0	0	
25	27.245	37.945	421	37.940	420				0	0	0	
26	27.265	37.965	425	37.960	424			0	0	0	0	
27	27.275	37.975	427	37.970	426		0	0	0	0	0	
28	27.285	37.985	429	37.980	428							0
29	27.295	37.995	431	37.990	430		0					0
30	27.305	37.005	433	38.000	432			0				0
31	27.315	37.015	435	38.010	434		0	0				0
32	27.325	37.025	437	38.020	436				0			0
33	27.335	37.035	439	38.030	438		0		0			0
34	27.345	37.045	441	37.040	440			0	0			0
35	27.335	37.055	443	37.050	442		0	0	0			0
36	27.365	37.065	445	37.060	444					0		0
37	27.375	37.075	447	37.070	446		0			0		0
38	27.385	37.085	449	37.080	448			0	0			0
39	27.395	37.095	451	37.090	450		0	0		0		0
40	27.405	38.105	453	38.100	452					0		0

0 = SWITCH CLOSURE (GND)

$$F_{VCO} = \left(\frac{N}{2048} + \frac{7}{2}\right) F_{REF}$$

$F_{REF} = 10.24MHz$

$F_{CHAN} = F_{VCO} - 10.7MHz$ (ON USB)

$F_{VCO} - 10.695MHz$ (ON LSB)

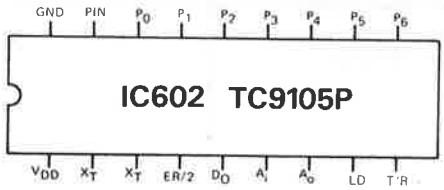

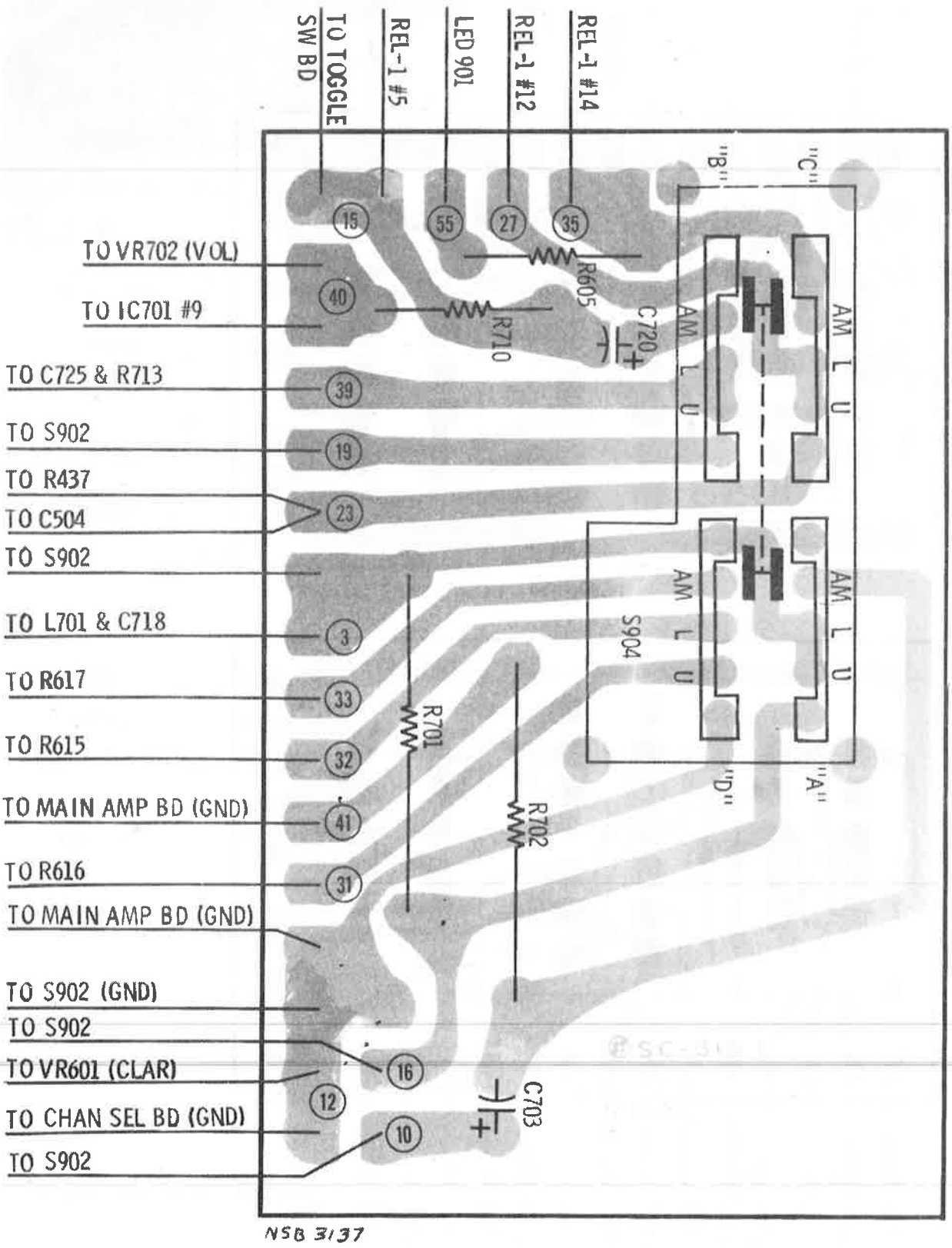

BOTTOM VIEW – WIRING SIDE
CM550 MODE SELECT SWITCH PLATED BOARD DIAGRAM

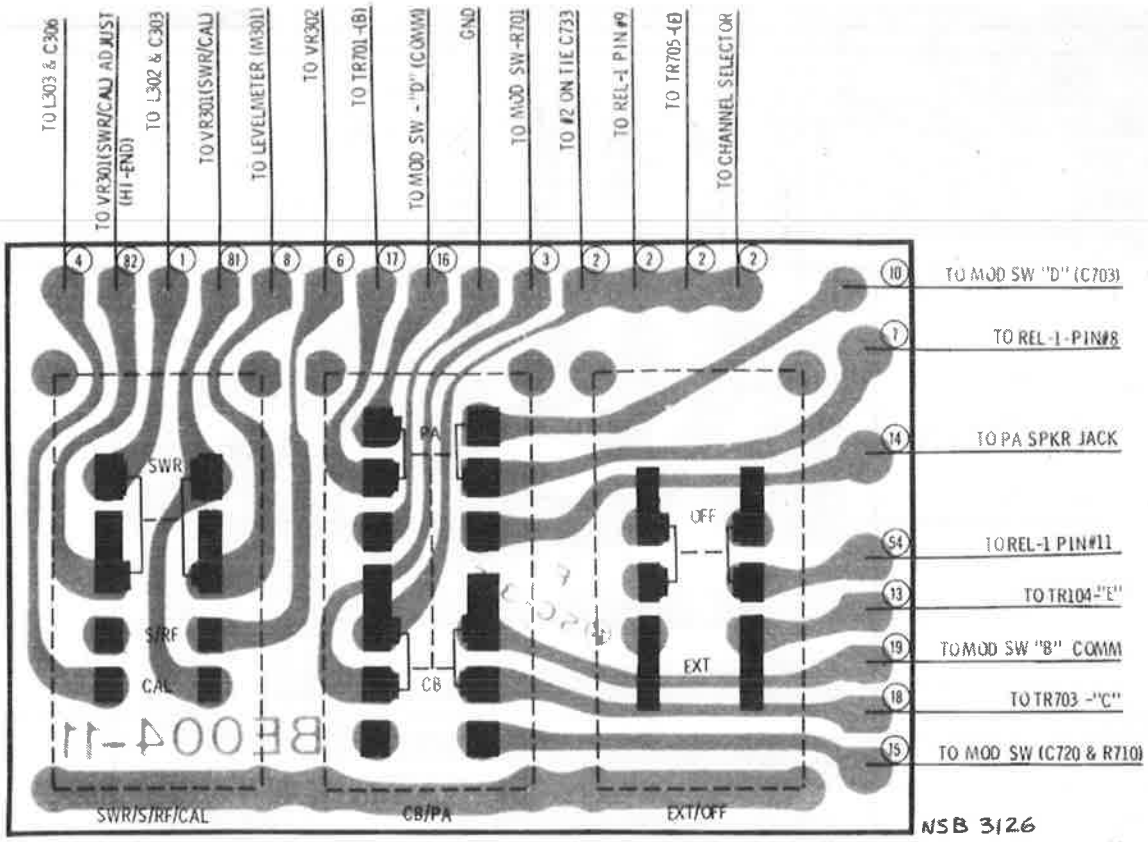

TOP VIEW – COMPONENT SIDE

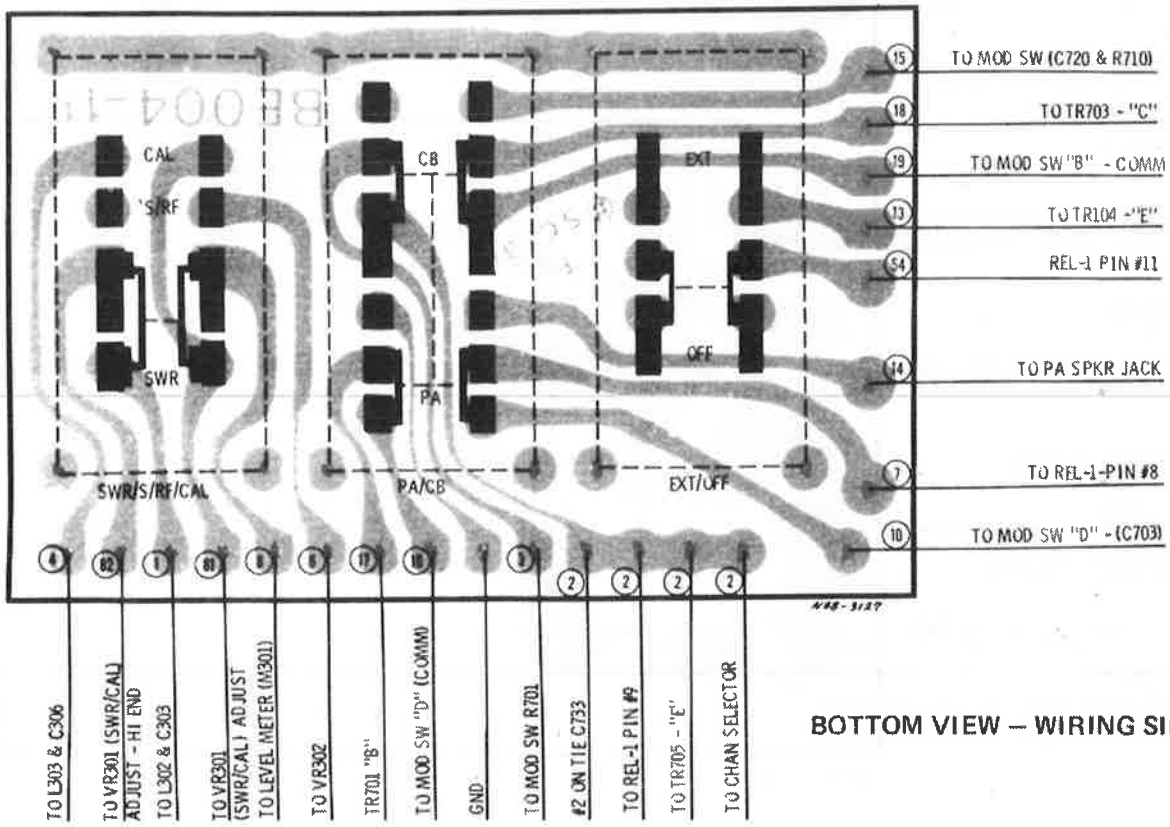

BOTTOM VIEW – WIRING SIDE

CM550 TOGGLE SWITCH PLATED BOARD DIAGRAM

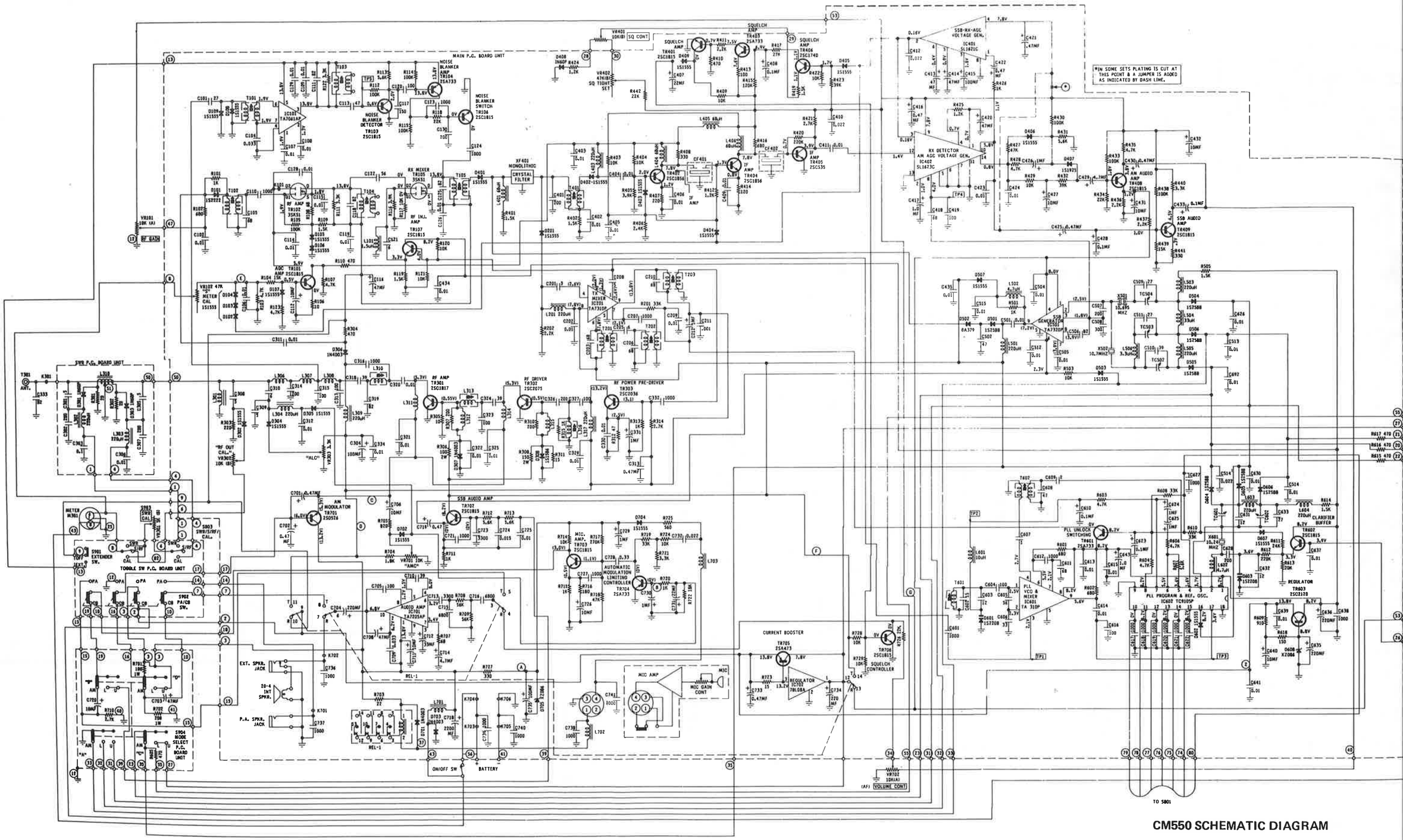

CM550 SCHEMATIC DIAGRAM

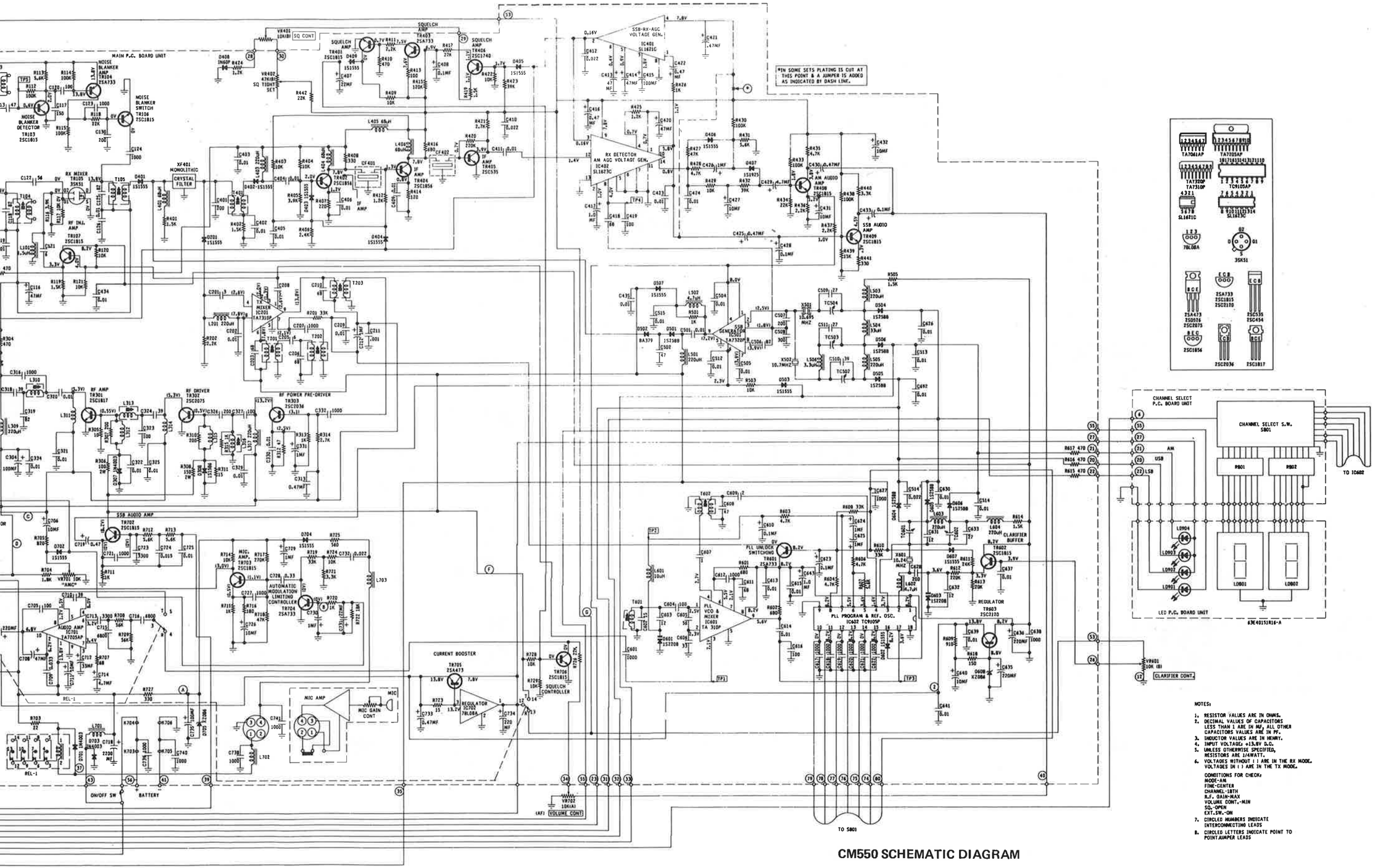

NOTES:

1. RESISTOR VALUES ARE IN OHMS.
2. DECIMAL VALUES OF CAPACITORS LESS THAN 1 ARE IN MF, ALL OTHER CAPACITORS VALUES ARE IN PF.
3. INDUCTOR VALUES ARE IN HENRY.
4. INPUT VOLTAGE: +13.8V D.C.
5. UNLESS OTHERWISE SPECIFIED, RESISTORS ARE 1/4WATT.
6. VOLTAGES WITHOUT ( ) ARE IN THE RX MODE. VOLTAGES IN ( ) ARE IN THE TX MODE.

   CONDITIONS FOR CHECK:
   MODE-AM
   FINE-CENTER
   CHANNEL-18TH
   R.F. GAIN-MAX
   VOLUME CONT.-MIN
   SQ.-OPEN
   EXT.SW.-ON
7. CIRCLED NUMBERS INDICATE INTERCONNECTING LEADS
8. CIRCLED LETTERS INDICATE POINT TO POINT JUMPER LEADS

CM550 SCHEMATIC DIAGRAM

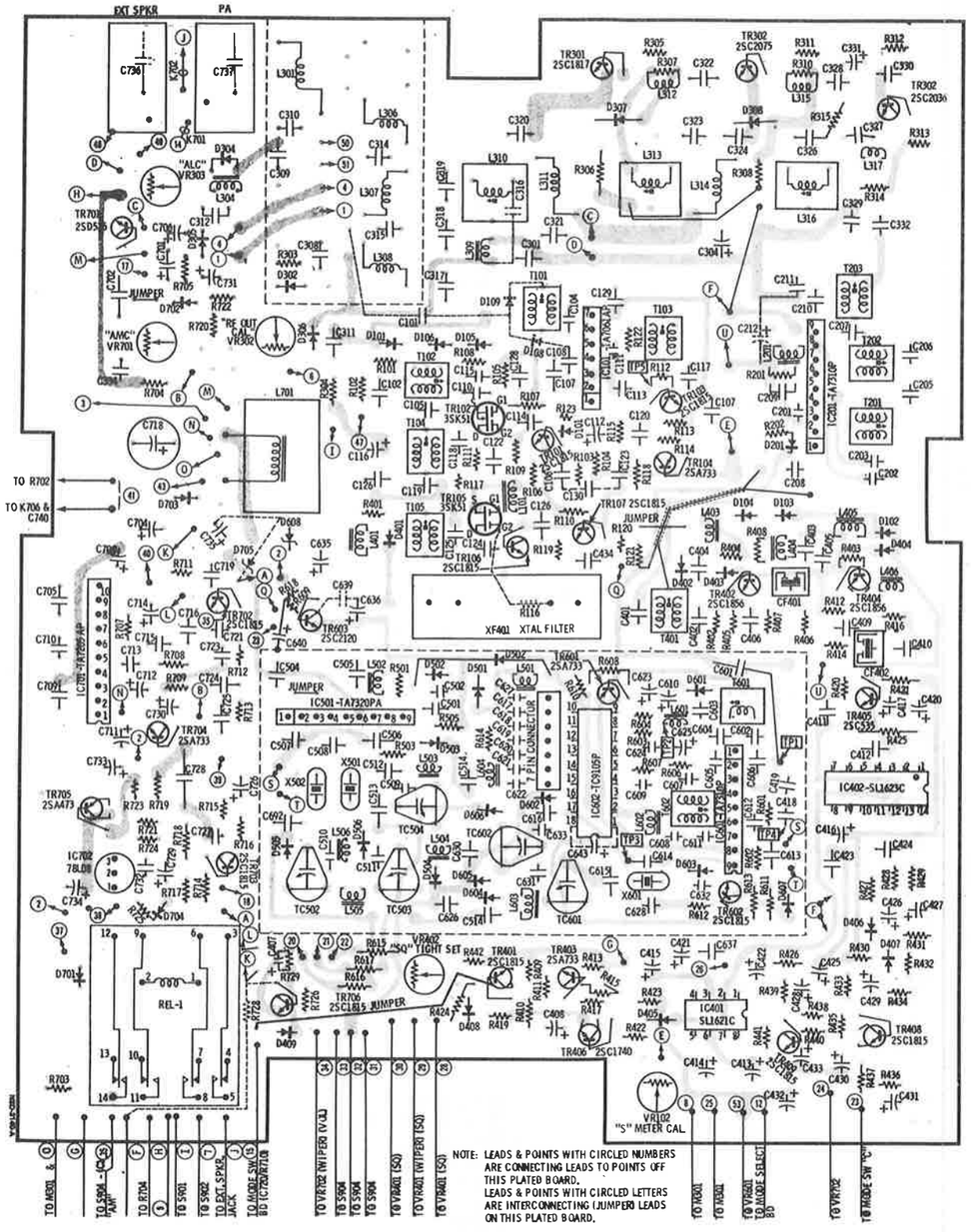

TOP VIEW – COMPONENT SIDE

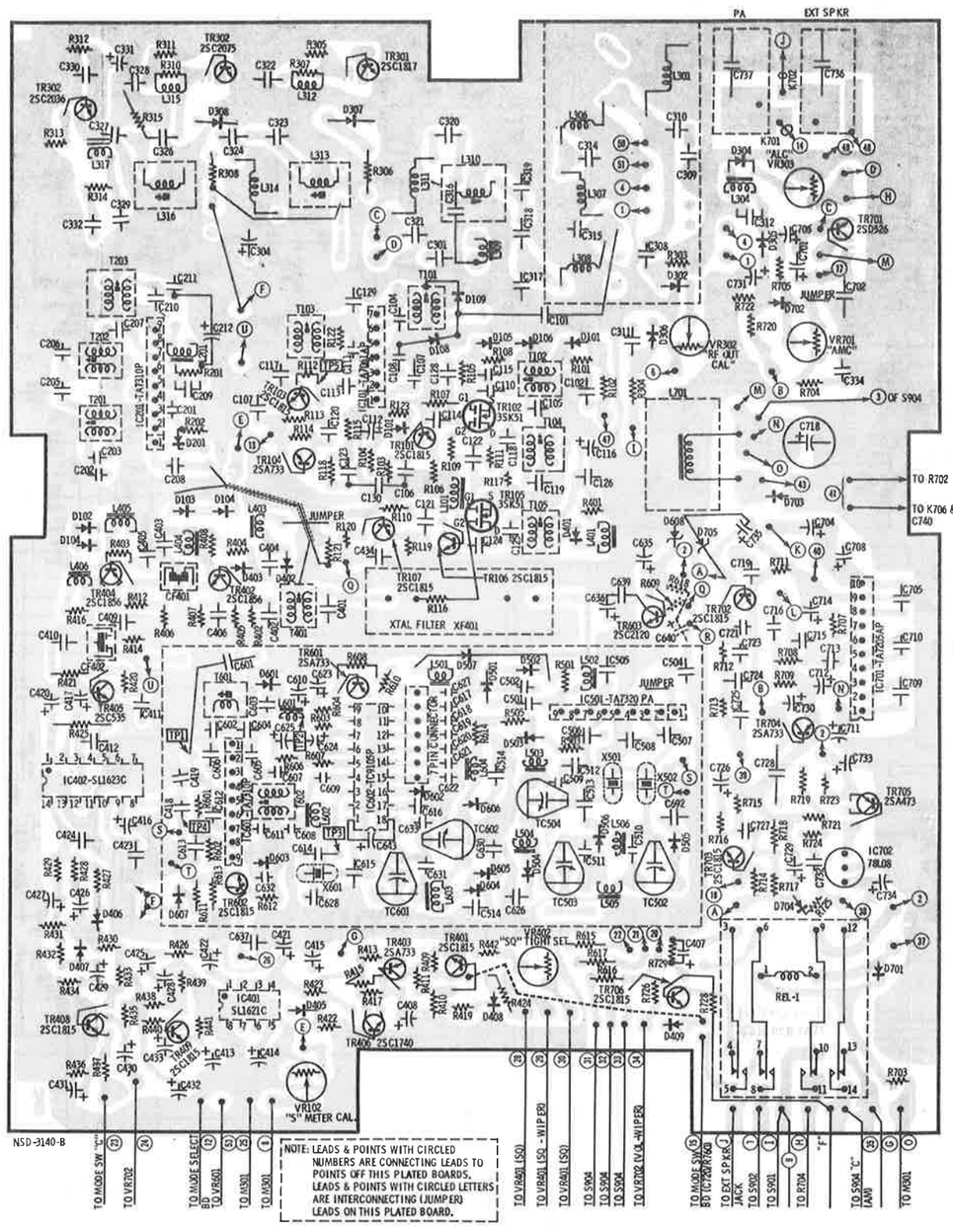

BOTTOM VIEW – WIRING SIDE

CM550 MOBILE CB RADIO MAIN PLATED BOARD DIAGRAM

TRANSISTOR AND IC VOLTAGE READINGS

TR101 B – 0.5V E – 0.0V C – 5.9V	TR102 G1 – 1.9V G2 – 5.9V D – 13.8V S – 1.8V	TR103 B – 0.6V E – 0.0V C – 2.0V	TR104 B – 13.8V E – 13.8V C – 0.0V
TR105 G1 – 0.0V G2 – 0.0V D – 13.8V S – 0.0V	TR106 B – 0.0V E – 0.0V C – 0.0V	TR107 B – 4.0V E – 3.3V C – 8.2V	TR301 B – 0.55V E – 0.0V C – 5.3V
TR302 B – 0.5V E – 0.0V C – 5.3V	TR303 B – 3.1V E – 2.5V C – 13.2V	TR401 B – 0.7V E – 0.0V C – 0.0V	TR402 B – 2.0V E – 1.2V C – 7.8V
TR403 B – 6.9V E – 7.6V C – 7.5V	TR404 B – 1.3V E – 0.8V C – 7.8V	TR405 B – 0.7V E – 0.0V C – 3.9V	TR406 B – 1.7V E – 1.1V C – 1.1V
TR408 B – 1.8V E – 1.2V C – 3.8V	TR409 B – 1.0V E – 0.3V C – 4.5V	TR601 B – 8.2V E – 8.2V C – 0.0V	TR602 B – 3.9V E – 3.3V C – 8.2V
TR603 B – 0.8V E – 0.2V C – 13.8V	TR701 B – 6.0V E – 5.3V C – 13.2V	TR702 B – 0.0V E – 0.0V C – 8.2V	TR703 B – 1.1V E – 0.5V C – 3.0V
TR704 B – 0.0V E – 0.0V C – 0.0V	TR705 B – 13.2V E – 13.8V C – 7.8V	TR706 B – 0.0V E – 0.0V C – 0.0V	

IC101 - TA7061AP

PIN	VOLTAGE
1	1.9V
2	1.3V
3	13.8V
4	0.0V
5	13.8V
6	1.9V
7	1.9V

IC201 - TA7310P

PIN	VOLTAGE
1	2.6V
2	2.0V
3	1.3V
4	2.6V
5	0.0V
6	7.8V
7	2.1V
8	7.8V
9	13.8V

IC401 - SL1621C

PIN	VOLTAGE
1	1.1V
2	0.16V
3	1.8V
4	7.8V
5	0.9V
6	0.4V
7	.....
8	0.0V

IC402 - SL1623C

PIN	VOLTAGE
1	0.7V
2	1.0V
3	0.15V
4	0.7V
5	0.0V
6	0.0V
7	0.0V
8	4.0V
9	7.8V
10	5.8V
11	0.0V
12	1.4V
13	0.0V
14	0.8V

IC501 - TA7320P

PIN	VOLTAGE
1	.....
2	2.5V
3	1.8V
4	.....
5	0.0V
6	2.3V
7	3.9V
8	3.9V
9	7.2V

IC601 - TA7310P

PIN	VOLTAGE
1	2.5V
2	2.3V
3	2.1V
4	2.7V
5	0.0V
6	5.5V
7	2.1V
8	8.2V
9	5.6V

IC602 - TC9105P

PIN	VOLTAGE
1	8.2V
2	.....
3	3.7V
4	1.6V
5	3.6V
6	5.5V
7	.....
8	8.2V
9	0.0V
10	0.0V
11	8.2V
12	0.0V
13	8.2V
14	0.0V
15	8.2V
16	8.2V
17	3.6V
18	0.0V

IC701 - TA7205AP

PIN	VOLTAGE
1	13.8V
2	12.5V
3	3.8V
4	8.0V
5	1.5V
6	3.2V
7	3.4V
8	1.2V
9	0.0V
10	6.8V

IC702 - 78L08A

PIN	VOLTAGE
1	.....
2	0.0V
3	13.2V

(12)	BLK
(22)	GRN
(21)	YEL
(20)	WHT
(55)	VIO
(27)	ORG
(27)	ORG

CAUTION
* NOTE: TH
THE BOARD
WIRING O
WIRE PER

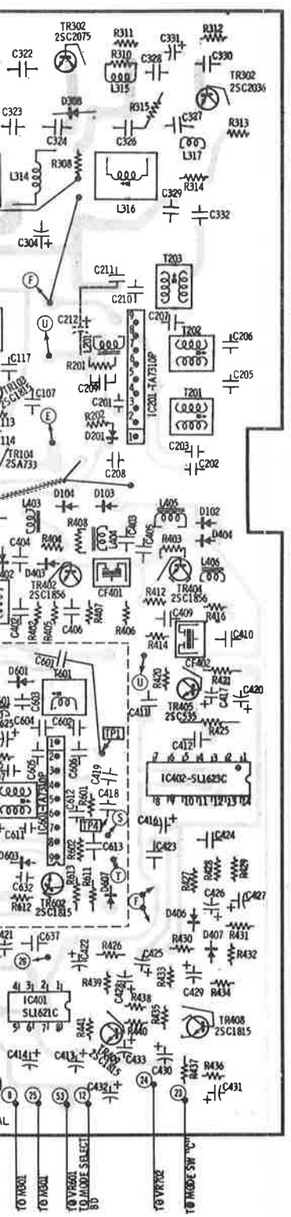

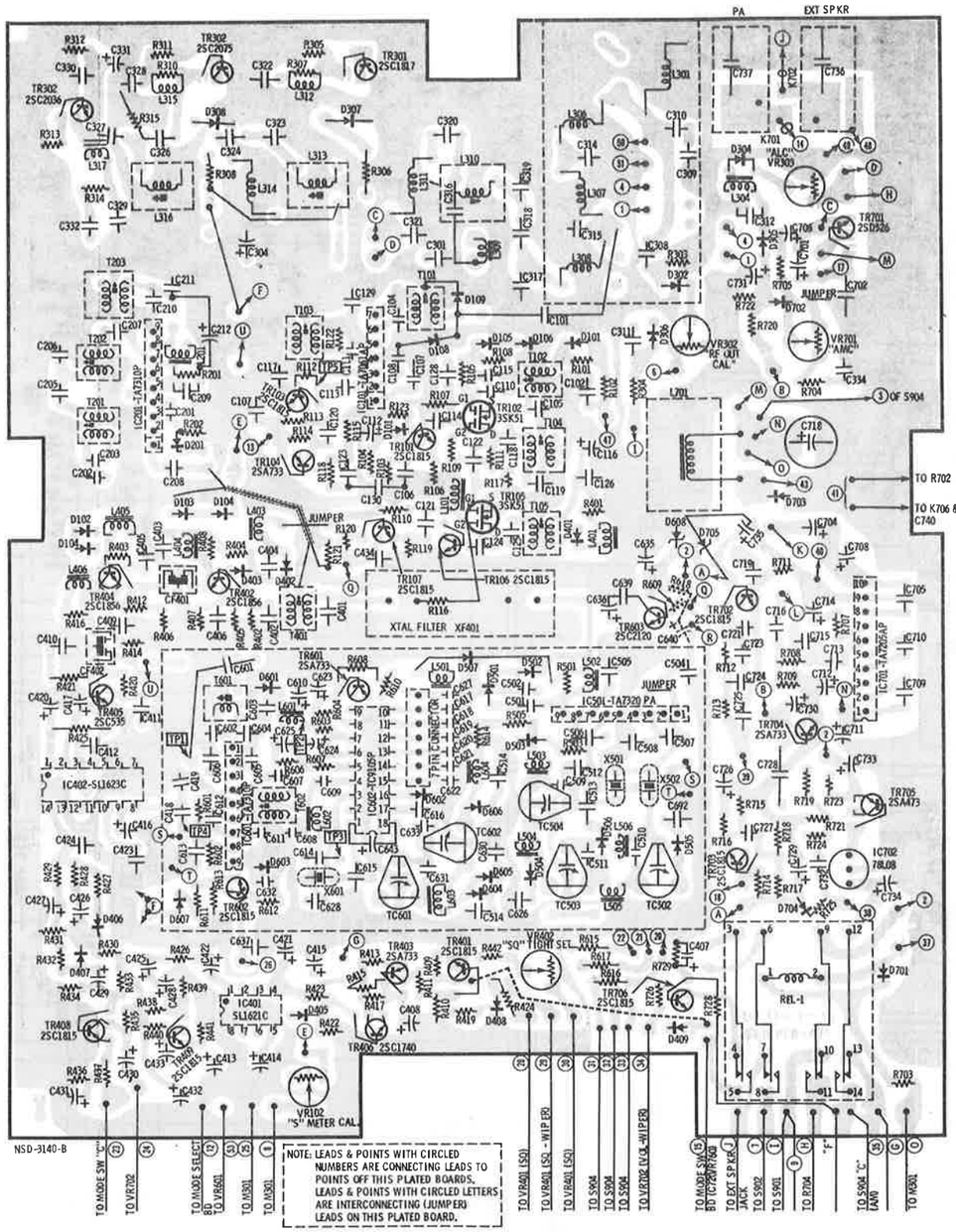

BOTTOM VIEW – WIRING SIDE

CM550 MOBILE CB RADIO MAIN PLATED BOARD DIAGRAM

TRANSISTOR AND IC VOLTAGE READINGS

TR101	TR102	TR103	TR104
B – 0.5V	G1 – 1.9V	B – 0.6V	B – 13.8V
E – 0.0V	G2 – 5.9V	E – 0.0V	E – 13.8V
C – 5.9V	D – 13.8V	C – 2.0V	C – 0.0V
	S – 1.8V		
TR105	TR106	TR107	TR301
G1 - 0.0V	B – 0.0V	B – 4.0V	B – 0.55V
G2 – 0.0V	E – 0.0V	E – 3.3V	E – 0.0V
D – 13.8V	C – 0.0V	C – 8.2V	C – 5.3V
S – 0.0V			
TR302	TR303	TR401	TR402
B – 0.5V	B – 3.1V	B – 0.7V	B – 2.0V
E – 0.0V	E – 2.5V	E – 0.0V	E – 1.2V
C – 5.3V	C – 13.2V	C – 0.0V	C – 7.8V
TR403	TR404	TR405	TR406
B – 6.9V	B – 1.3V	B – 0.7V	B – 1.7V
E – 7.6V	E – 0.8V	E – 0.0V	E – 1.1V
C – 7.5V	C – 7.8V	C – 3.9V	C – 1.1V
TR408	TR409	TR601	TR602
B – 1.8V	B – 1.0V	B – 8.2V	B – 3.9V
E – 1.2V	E – 0.3V	E – 8.2V	E – 3.3V
C – 3.8V	C – 4.5V	C – 0.0V	C – 8.2V
TR603	TR701	TR702	TR703
B – 6.8V	B – 6.0V	B – 0.0V	B – 1.1V
E – 6.2V	E – 5.3V	E – 0.0V	E – 0.5V
C – 13.8V	C – 13.2V	C – 8.2V	C – 3.0V
TR704	TR705	TR706	
B – 0.0V	B – 13.2V	B – 0.0V	
E – 0.0V	E – 13.8V	E – 0.0V	
C – 0.0V	C – 7.8V	C – 0.0V	

IC101 - TA7061AP

PIN	VOLTAGE
1	1.9V
2	1.3V
3	13.8V
4	0.0V
5	13.8V
6	1.9V
7	1.9V

IC201 - TA7310P

PIN	VOLTAGE
1	2.6V
2	2.0V
3	1.3V
4	2.6V
5	0.0V
6	7.8V
7	2.1V
8	7.8V
9	13.8V

IC401 - SL1621C

PIN	VOLTAGE
1	1.1V
2	0.16V
3	1.8V
4	7.8V
5	0.9V
6	0.4V
7	------
8	0.0V

IC402 - SL1623C

PIN	VOLTAGE	PIN	VOLTAGE
1	0.7V	8	4.0V
2	1.0V	9	7.8V
3	0.18V	10	5.8V
4	0.7V	11	0.0V
5	0.0V	12	1.4V
6	0.0V	13	0.0V
7	0.0V	14	0.8V

IC501 - TA7320P

PIN	VOLTAGE
1	------
2	2.5V
3	1.8V
4	------
5	0.0V
6	2.3V
7	3.9V
8	3.9V
9	7.2V

IC601 - TA7310P

PIN	VOLTAGE
1	2.5V
2	2.3V
3	2.1V
4	2.7V
5	0.0V
6	5.5V
7	2.1V
8	8.2V
9	5.6V

IC602 - TC9105P

PIN	VOLTAGE	PIN	VOLTAGE
1	8.2V	10	0.0V
2	------	11	8.2V
3	3.7V	12	0.0V
4	1.6V	13	8.2V
5	3.6V	14	0.0V
6	5.5V	15	8.2V
7	----	16	8.2V
8	8.2V	17	3.6V
9	0.0V	18	0.0V

IC701 - TA205AP

PIN	VOLTAGE
1	13.8V
2	12.5V
3	3.8V
4	8.0V
5	1.5V
6	3.2V
7	3.4V
8	1.2V
9	0.0V
10	6.8V

IC702 - 78L08A

PIN	VOLTAGE
1	------
2	0.0V
3	13.2V

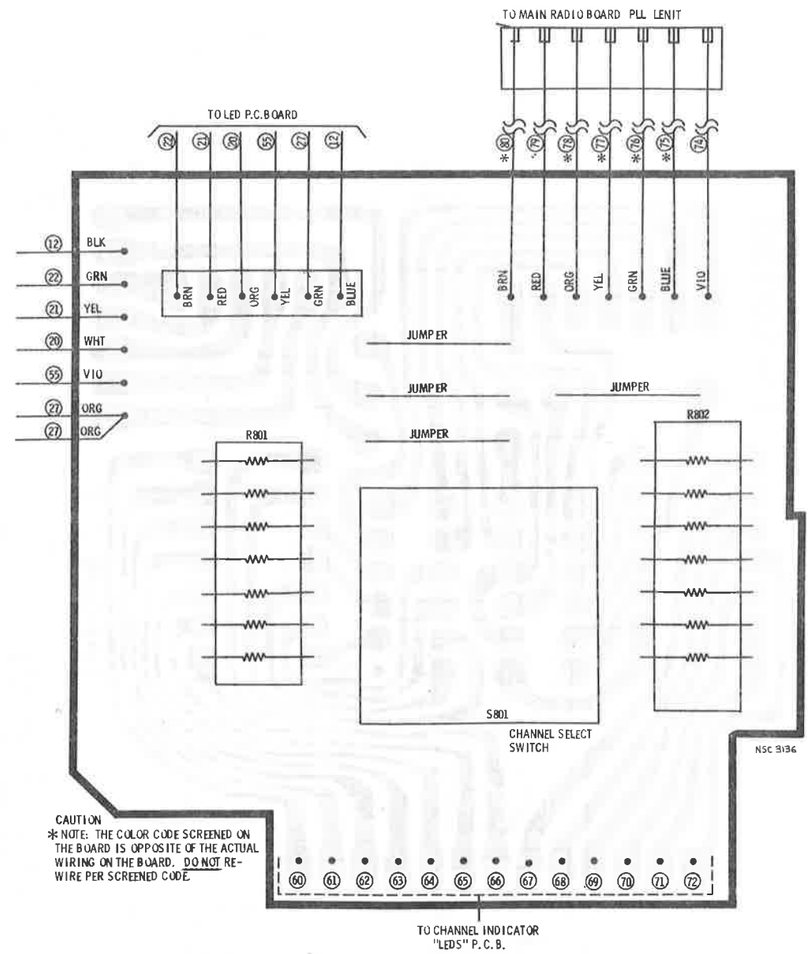

CM550/CB555 CHANNEL SELECTOR PLATED BOARD DIAGRAM

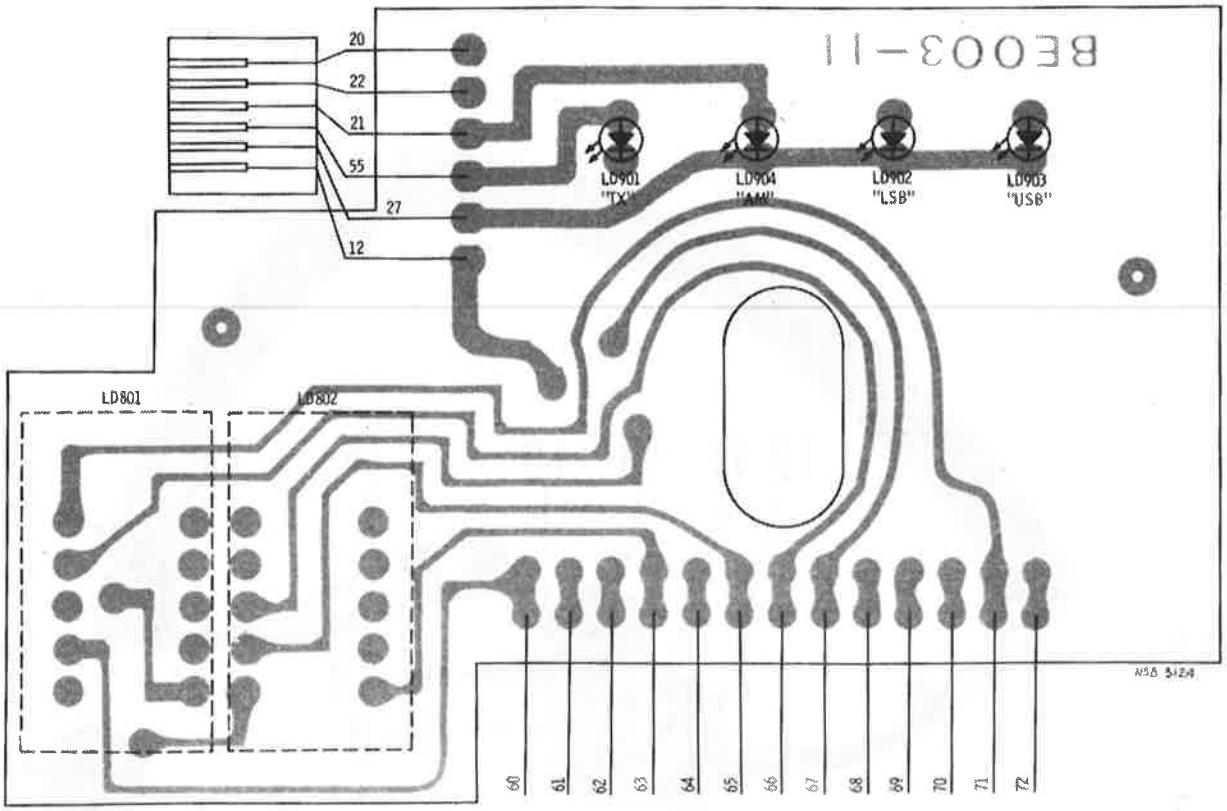

BOTTOM VIEW – WIRING SIDE

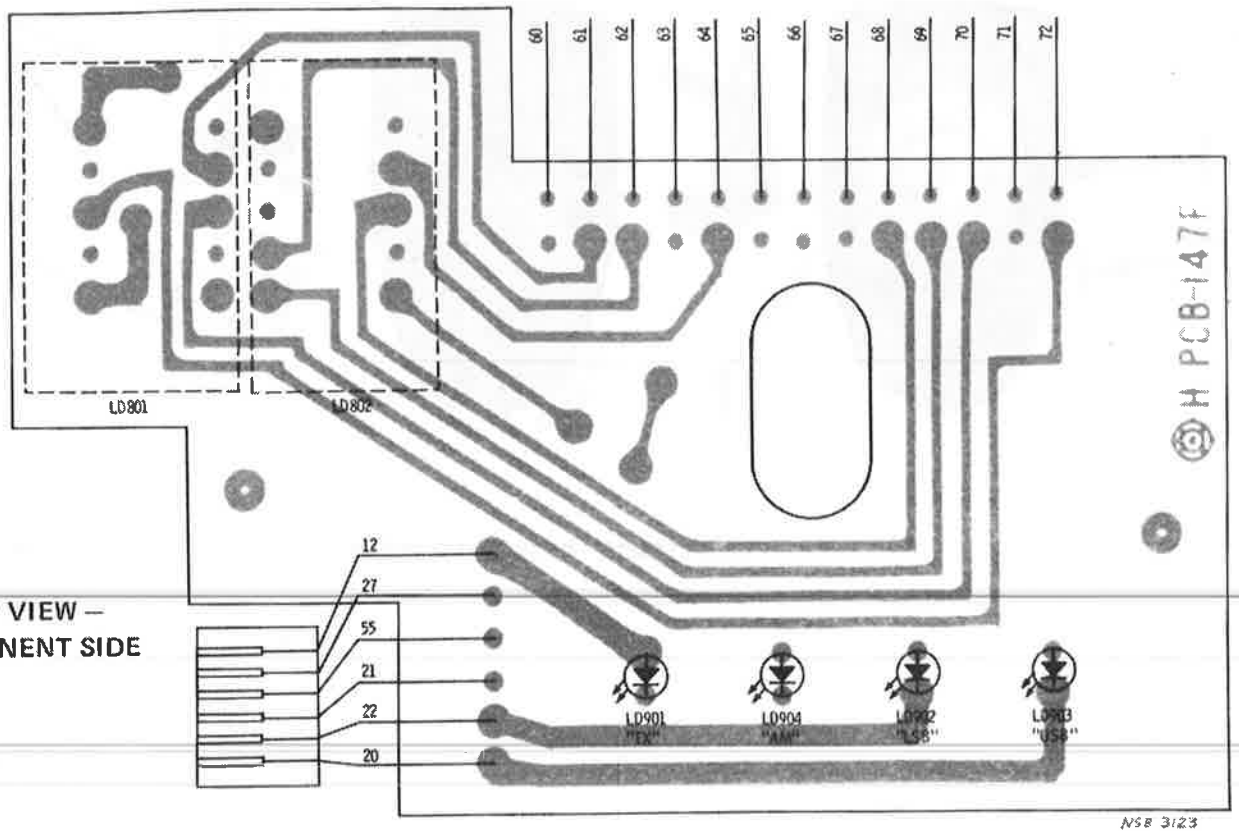

TOP VIEW – COMPONENT SIDE

CM550 "LED" DISPLAY PLATED BOARD DIAGRAM

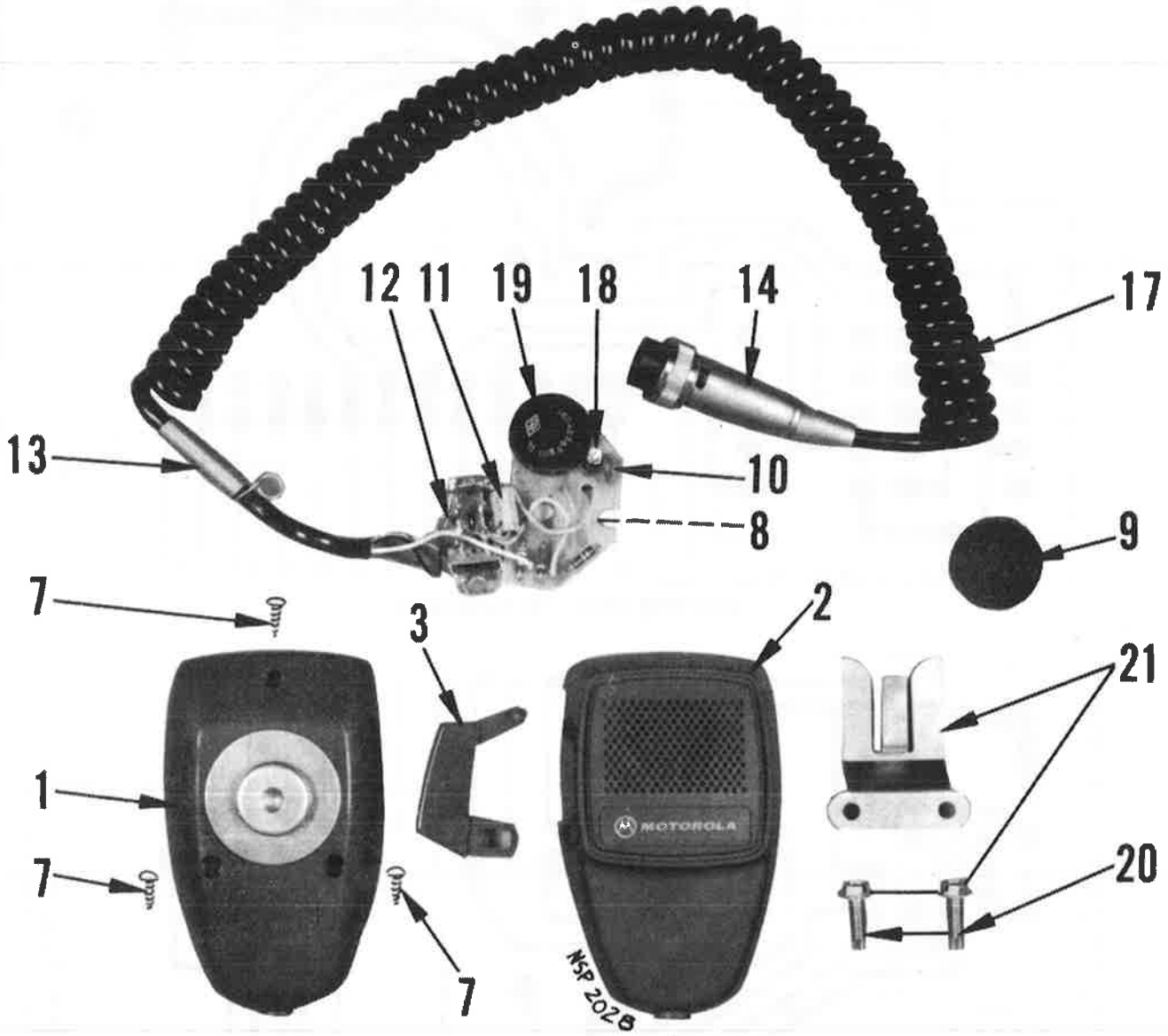

CM550 "MIC" EXPLODED VIEW

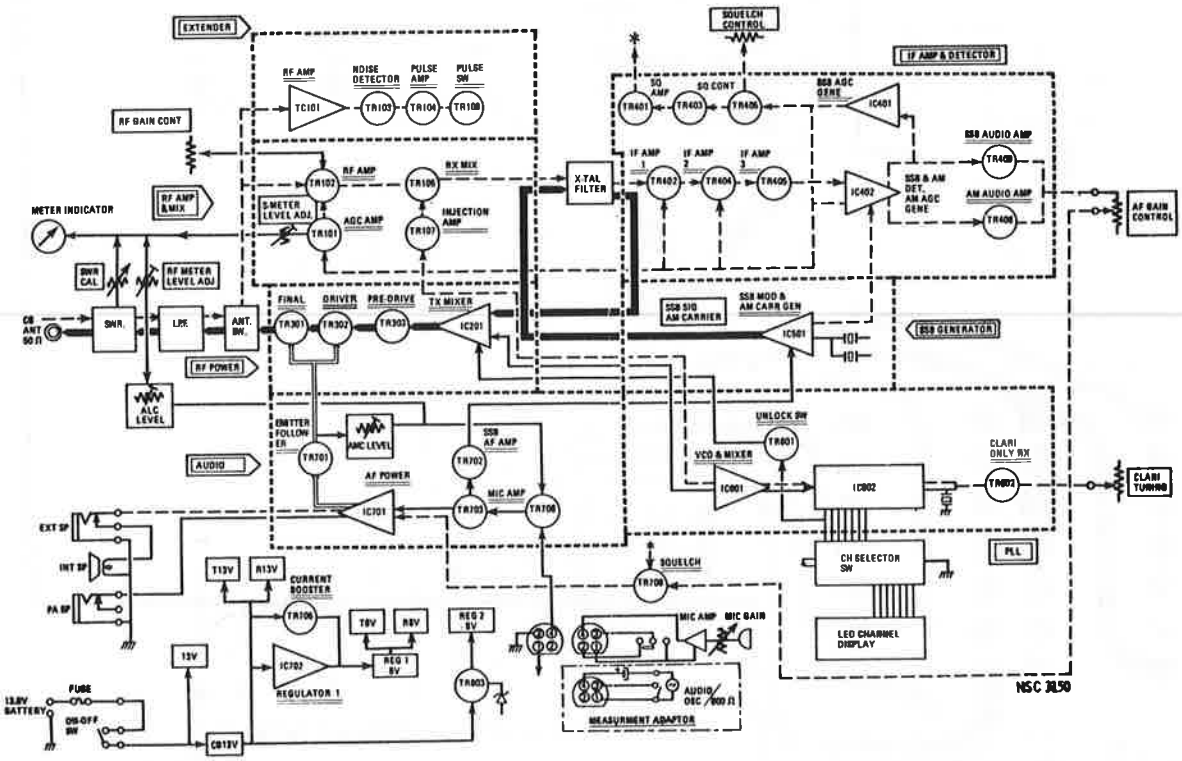

CM550 BLOCK DIAGRAM

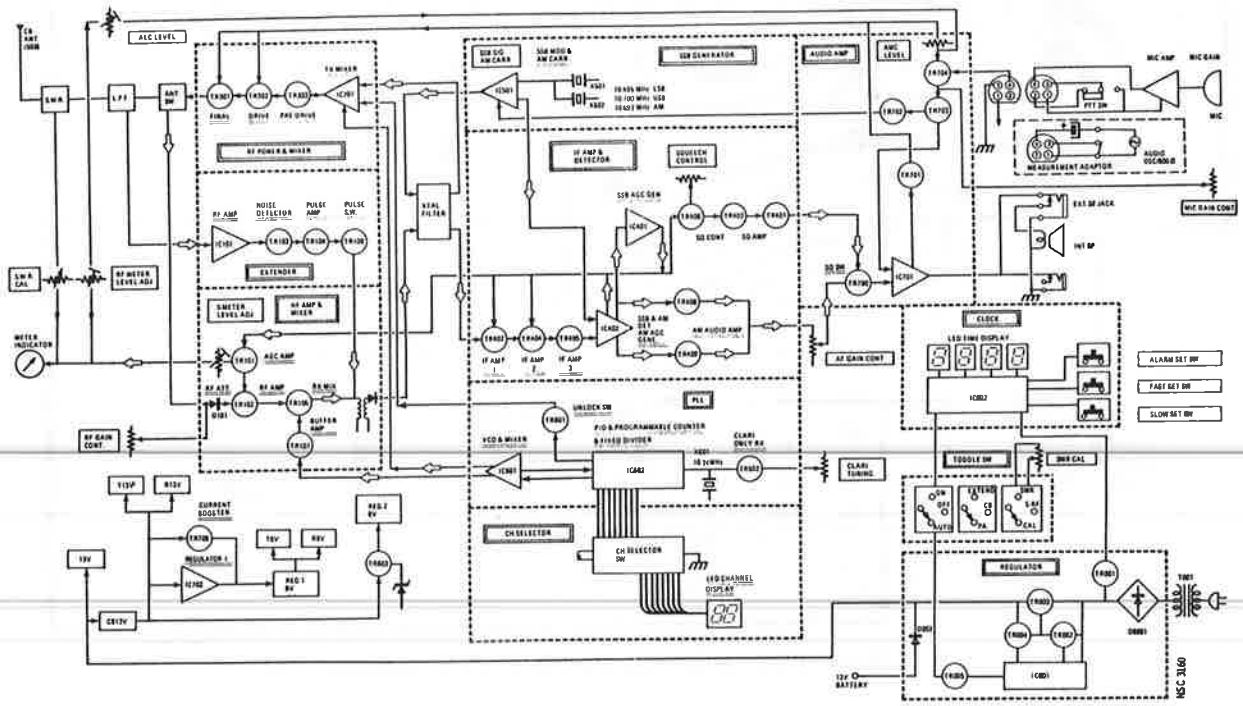

CB555 BLOCK DIAGRAM

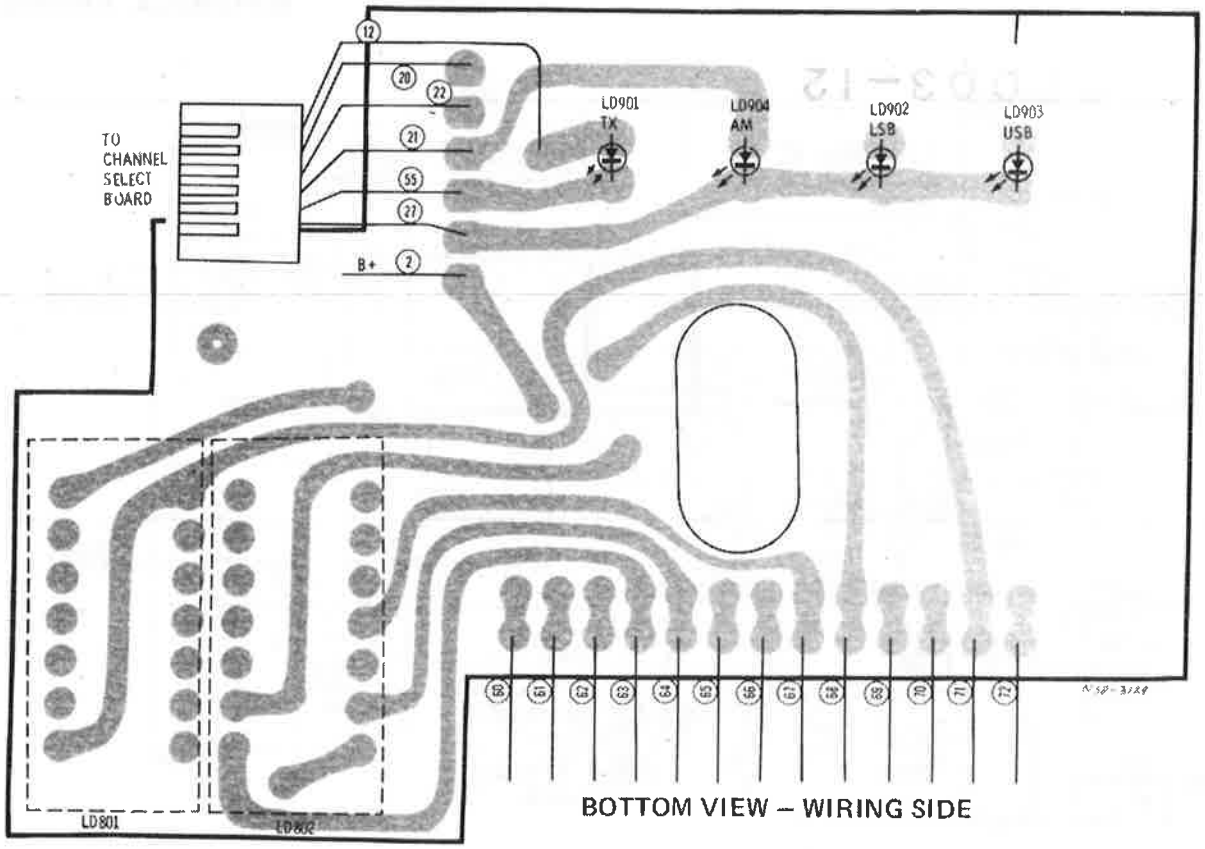

BOTTOM VIEW – WIRING SIDE

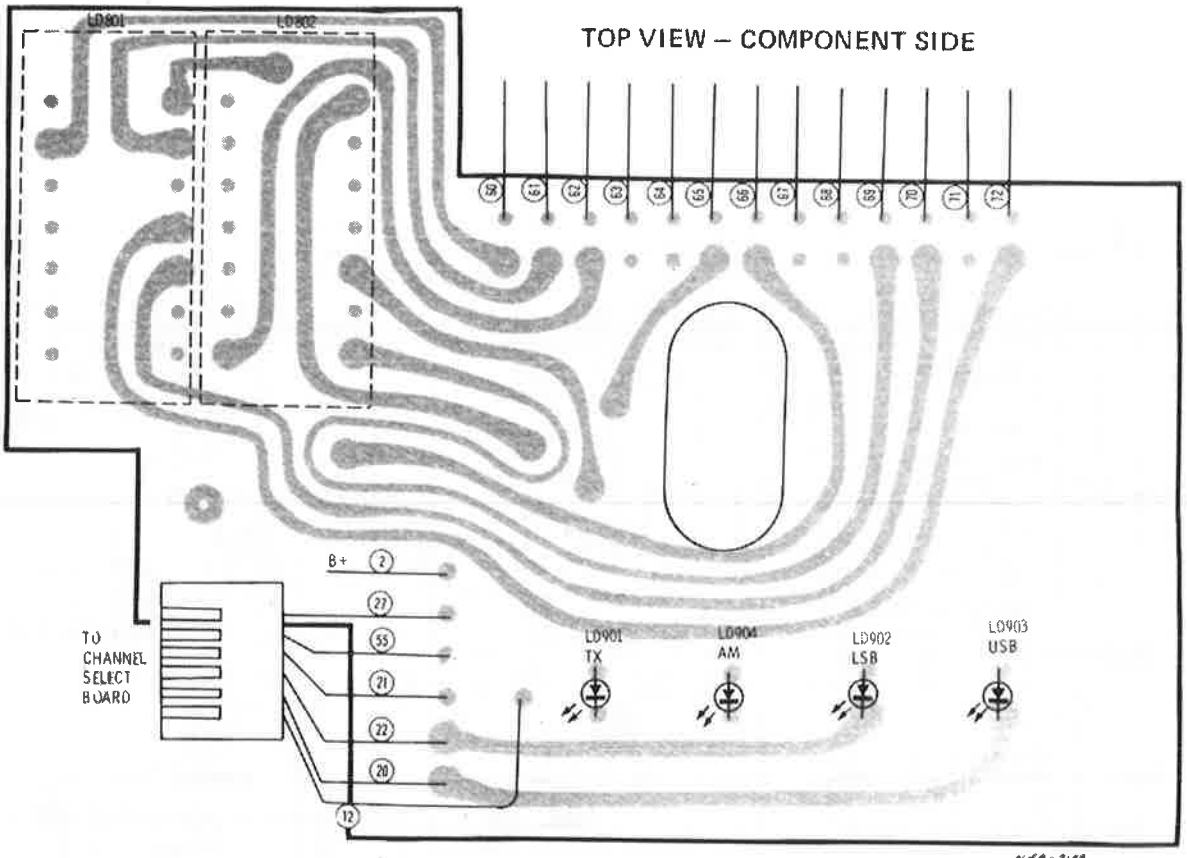

TOP VIEW – COMPONENT SIDE

CB555 "LED" DISPLAY PLATED BOARD DIAGRAM

BOTTOM VIEW – WIRING SIDE

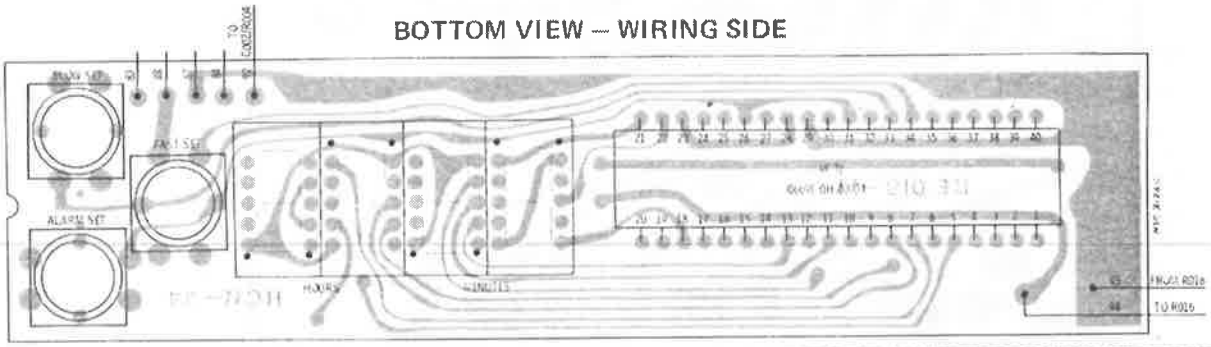

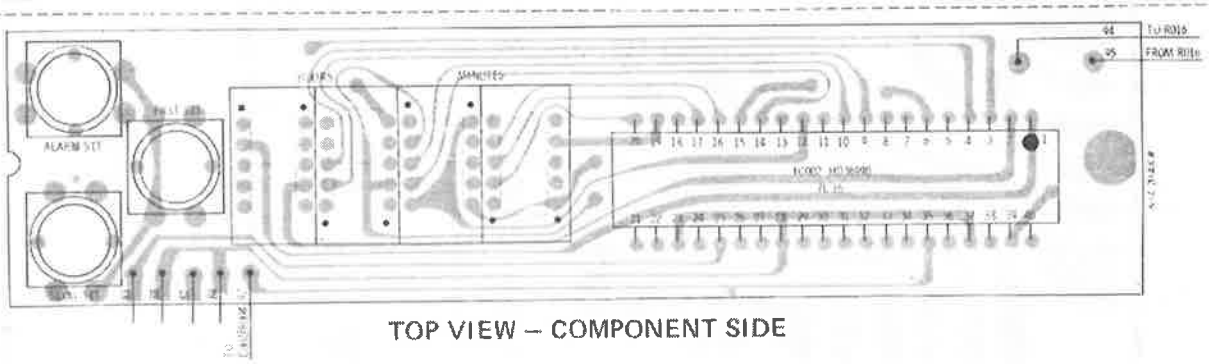

TOP VIEW – COMPONENT SIDE

CB555 CLOCK PLATED BOARD DIAGRAM

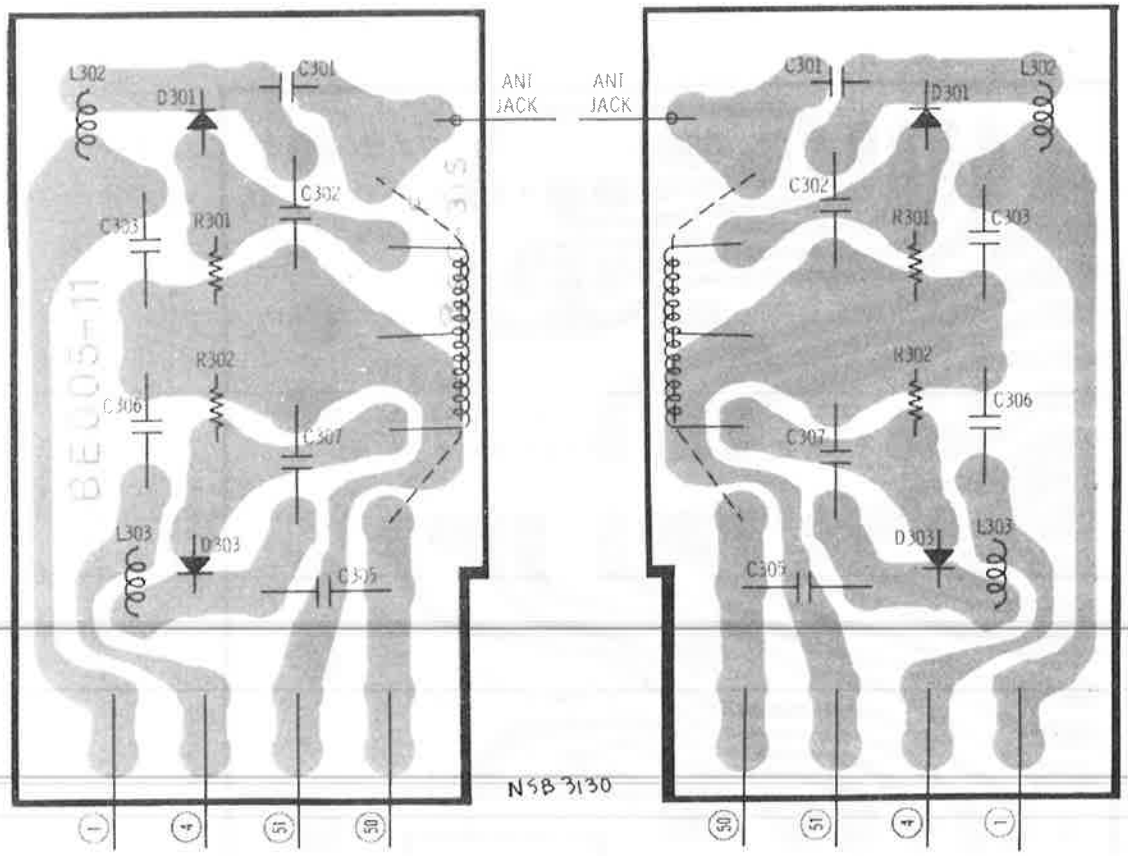

BOTTOM VIEW – WIRING SIDE

TOP VIEW – COMPONENT SIDE

CM550/CB555 SWR PLATED BOARD DIAGRAM

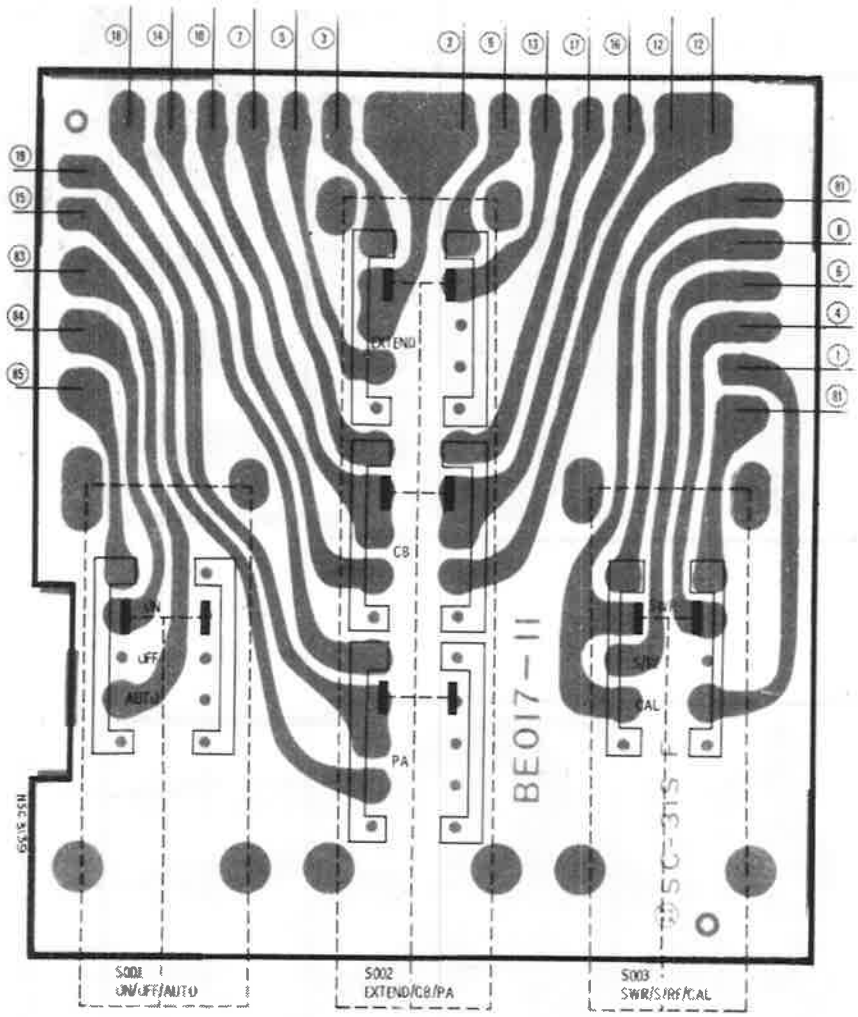

TOP VIEW – COMPONENT SIDE

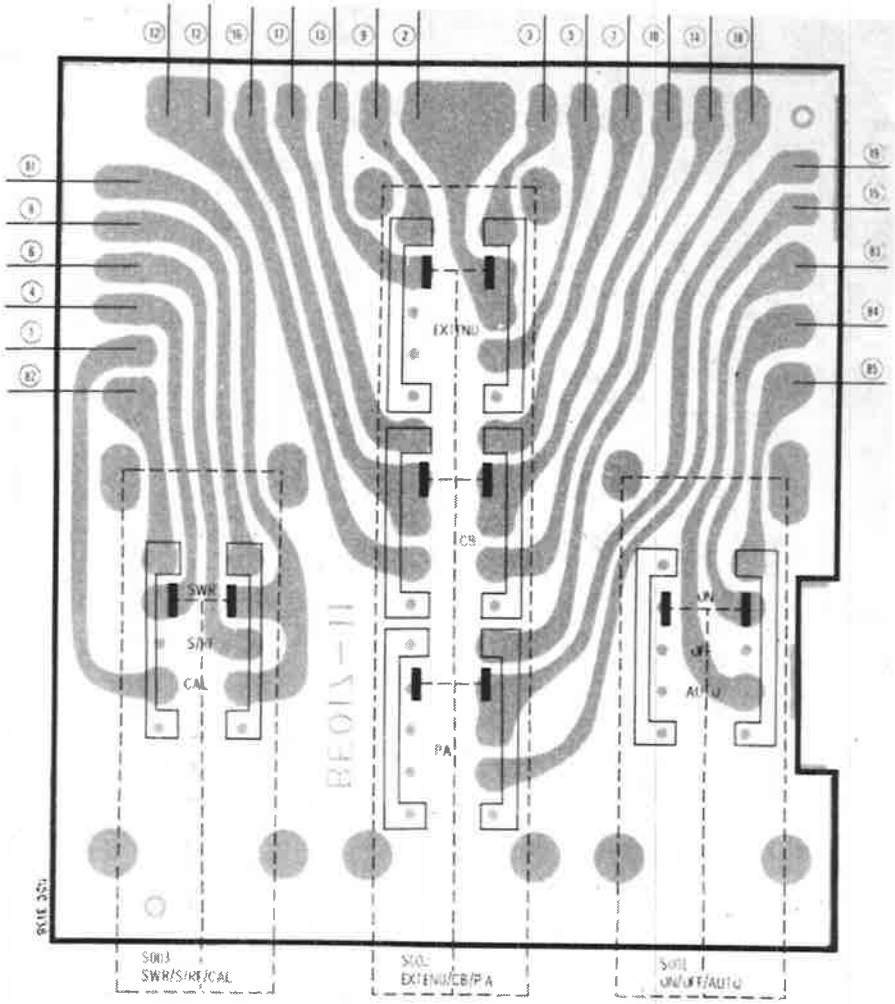

BOTTOM VIEW – WIRING SIDE

TOGGLE SWITCH PLATED BOARD DIAGRAM

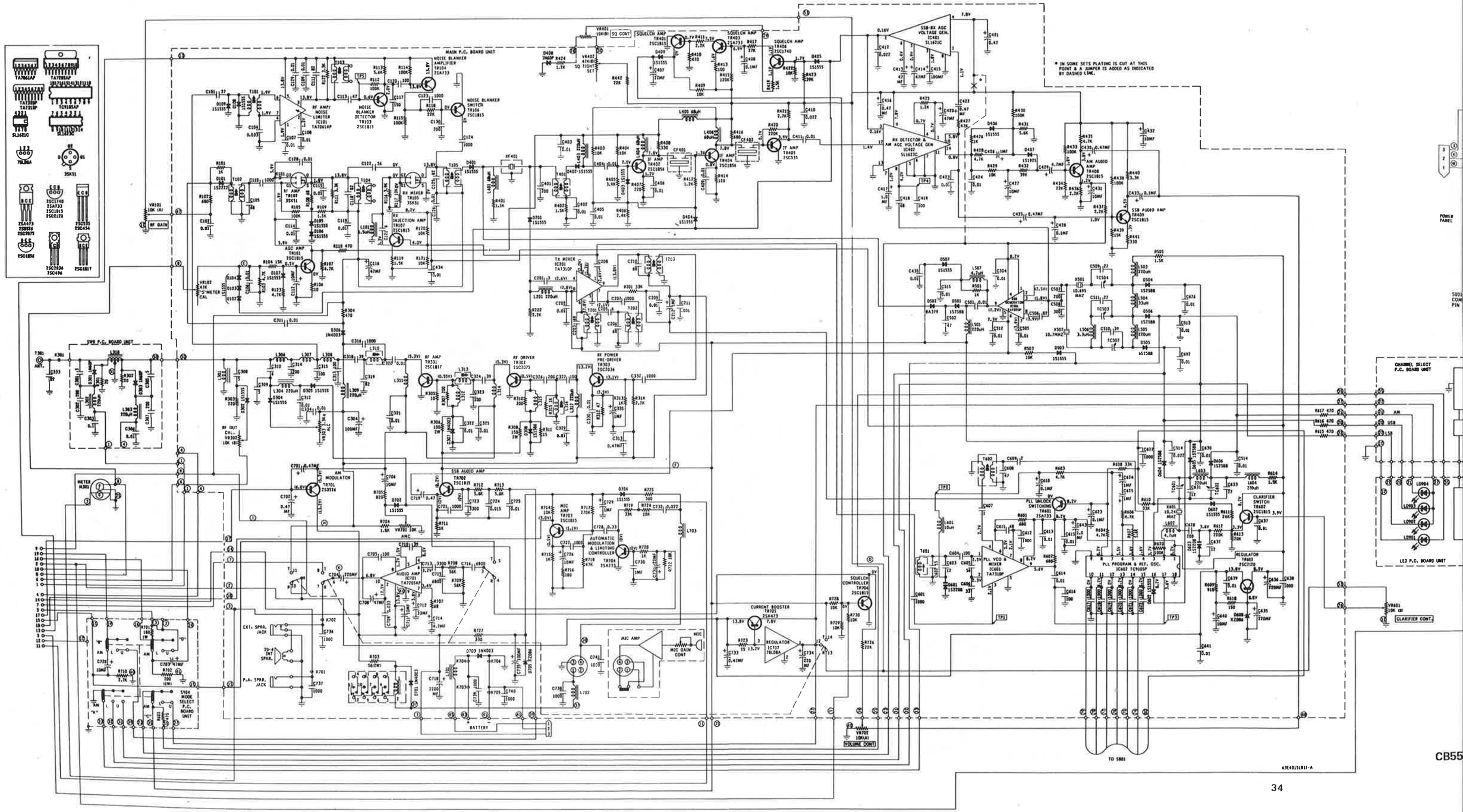
MAIN P.C. BOARD UNIT
SWR P.C. BOARD UNIT
CHANNEL SELECT P.C. BOARD UNIT
LED P.C. BOARD UNIT
MODE SELECT P.C. BOARD UNIT
* IN SOME SETS PLATING IS CUT AT THIS POINT & A JUMPER IS ADDED AS INDICATED BY DASHED LINE.
SQUELCH AMP
SSB-RX AGC VOLTAGE GEN.
RX DETECTOR & AM AGC VOLTAGE GEN
AM AUDIO AMP
SSB AUDIO AMP
NOISE BLANKER AMPLIFIER
NOISE BLANKER DETECTOR
NOISE BLANKER SWITCH
RF AMP/ NOISE LIMITER
RF AMP
RX MIXER
RX INJECTION AMP
ADC AMP
TX MIXER
IF AMP
RF AMP
RF DRIVER
RF POWER PRE-DRIVER
AM MODULATOR
SSB AUDIO AMP
AUDIO AMP
MIC AMP
AUTOMATIC MODULATION & LIMITING CONTROLLER
CURRENT BOOSTER
REGULATOR
SQUELCH CONTROLLER
PLL UNLOCK SWITCHING
PLL VCO & MIXER
PLL PROGRAM & REF. OSC.
CLARIFIER SWITCH
REGULATOR
EXT. SPKR. JACK
TO-4 INT SPKR.
P.A. SPKR. JACK
BATTERY
VOLUME CONT
CLARIFIER CONT.
POWER PANEL
TO S801
63E40151R17-A

CB55

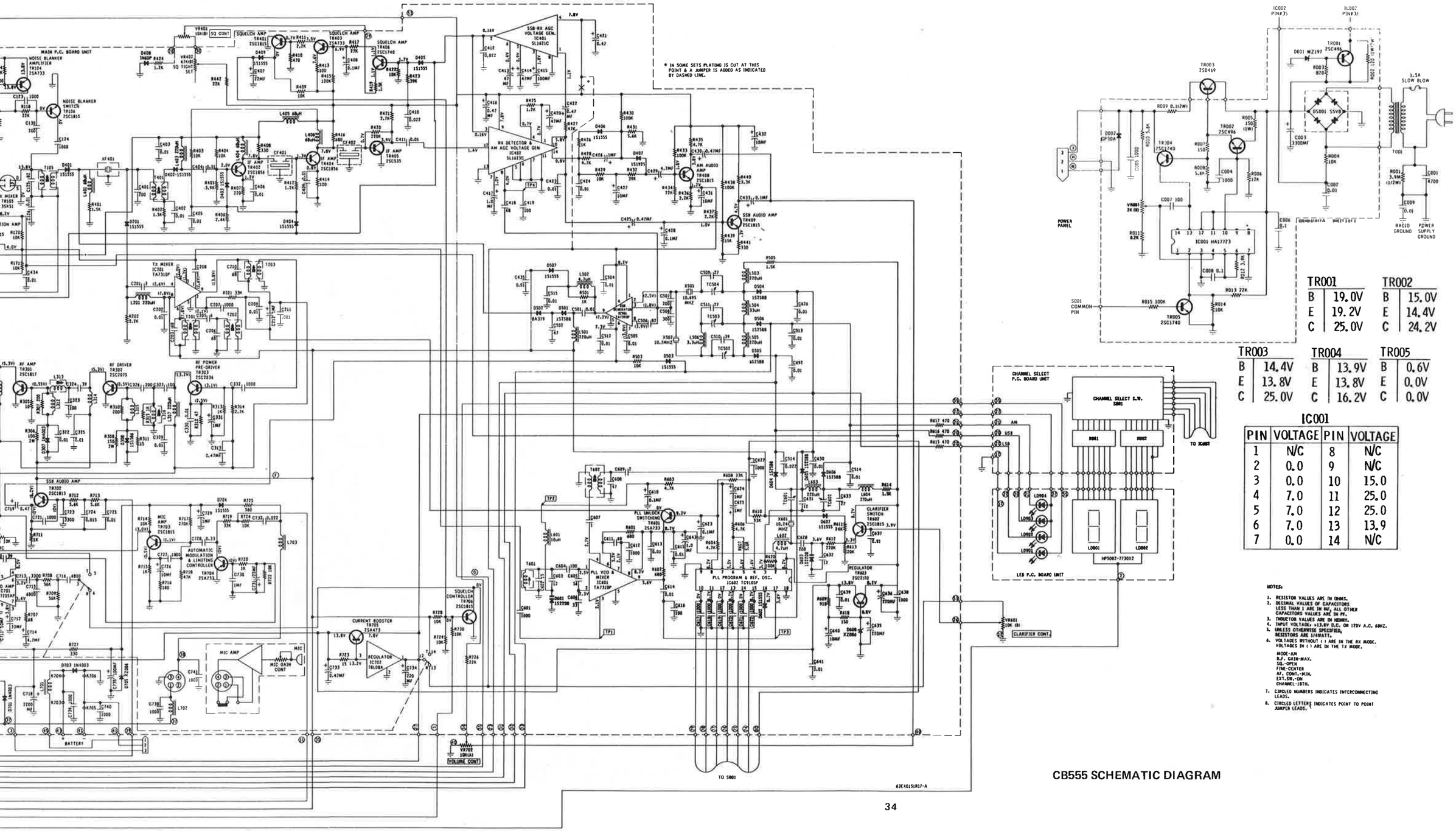

TR001		TR002	
B	19.0V	B	15.0V
E	19.2V	E	14.4V
C	25.0V	C	24.2V

TR003		TR004		TR005	
B	14.4V	B	13.9V	B	0.6V
E	13.8V	E	13.8V	E	0.0V
C	25.0V	C	16.2V	C	0.0V

IC001

PIN	VOLTAGE	PIN	VOLTAGE
1	N/C	8	N/C
2	0.0	9	N/C
3	0.0	10	15.0
4	7.0	11	25.0
5	7.0	12	25.0
6	7.0	13	13.9
7	0.0	14	N/C

NOTES:

1. RESISTOR VALUES ARE IN OHMS.
2. DECIMAL VALUES OF CAPACITORS LESS THAN 1 ARE IN MF, ALL OTHER CAPACITORS VALUES ARE IN PF.
3. INDUCTOR VALUES ARE IN HENRY.
4. INPUT VOLTAGE: +13.8V D.C. OR 120V A.C. 60HZ.
5. UNLESS OTHERWISE SPECIFIED, RESISTORS ARE 1/4WATT.
6. VOLTAGES WITHOUT ( ) ARE IN THE RX MODE. VOLTAGES IN ( ) ARE IN THE TX MODE.

   MODE-AM
   R.F. GAIN-MAX.
   SQ.-OPEN
   FINE-CENTER
   AF. CONT.-MIN.
   EXT.SW.-ON
   CHANNEL-1BTH.
7. CIRCLED NUMBERS INDICATES INTERCONNECTING LEADS.
8. CIRCLED LETTERS INDICATES POINT TO POINT JUMPER LEADS.

CB555 SCHEMATIC DIAGRAM

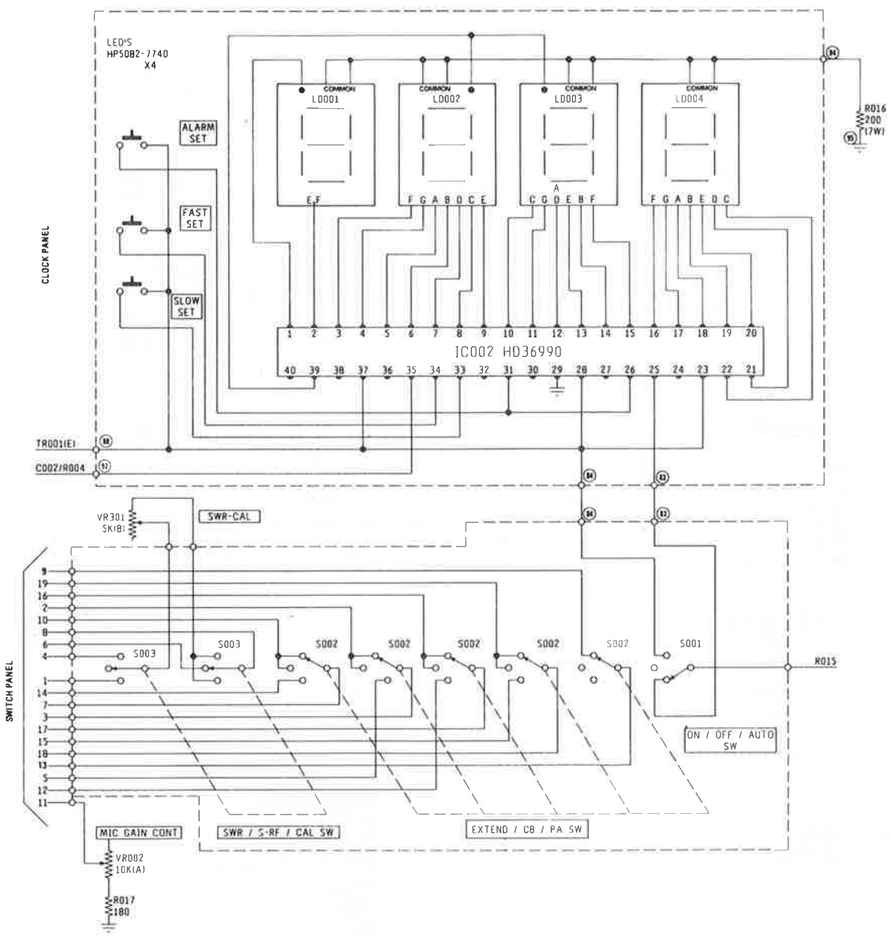

CB555 SCHEMATIC DIAGRAM

TRANSISTOR AND IC VOLTAGE READINGS

TR101	TR102	TR103	TR104
B – 0.5V	G1 – 1.9V	B – 0.6V	B – 13.8V
E – 0.0V	G2 – 5.9V	E – 0.0V	E – 13.8V
C – 5.9V	D – 13.8V	C – 2.0V	C – 0.0V
	S – 1.8V		
TR105	TR106	TR107	TR301
G1 – 0.0V	B – 0.0V	B – 4.0V	B – 0.55V
G2 – 0.0V	E – 0.0V	E – 3.3V	E – 0.0V
D – 13.8V	C – 0.0V	C – 8.2V	C – 5.3V
S – 0.0V			
TR302	TR303	TR401	TR402
B – 0.5V	B – 3.1V	B – 0.7V	B – 2.0V
E – 0.0V	E – 2.5V	E – 0.0V	E – 1.2V
C – 5.3V	C – 13.2V	C – 0.0V	C – 7.8V
TR403	TR404	TR405	TR406
B – 6.9V	B – 1.3V	B – 0.7V	B – 1.7V
E – 7.6V	E – 0.8V	E – 0.0V	E – 1.1V
C – 7.5V	C – 7.8V	C – 3.9V	C – 1.1V
TR408	TR409	TR601	TR602
B – 1.8V	B – 1.0V	B – 8.2V	B – 3.9V
E – 1.2V	E – 0.3V	E – 8.2V	E – 3.3V
C – 3.8V	C – 4.5V	C – 0.0V	C – 8.2V
TR603	TR701	TR702	TR703
B – 8.8V	B – 6.0V	B – 0.0V	B – 1.1V
E – 8.2V	E – 5.3V	E – 0.0V	E – 0.5V
C – 13.8V	C – 13.2V	C – 8.2V	C – 3.0V
TR704	TR705	TR706	
B – 0.0V	B – 13.2V	B – 0.0V	
E – 0.0V	E – 13.8V	E – 0.0V	
C – 0.0V	C – 7.8V	C – 0.0V	

IC101 - TA7061AP

PIN	VOLTAGE
1	1.9V
2	1.3V
3	13.8V
4	0.0V
5	13.8V
6	1.9V
7	1.9V

IC201 - TA7310P

PIN	VOLTAGE
1	2.6V
2	2.0V
3	1.3V
4	2.6V
5	0.0V
6	7.8V
7	2.1V
8	7.8V
9	13.8V

IC401 - SL1621C

PIN	VOLTAGE
1	1.1V
2	0.16V
3	1.8V
4	7.8V
5	0.9V
6	0.4V
7	------
8	0.0V

IC402 - SL1623C

PIN	VOLTAGE	PIN	VOLTAGE
1	0.7V	8	4.0V
2	1.0V	9	7.8V
3	0.16V	10	5.8V
4	0.7V	11	0.0V
5	0.0V	12	1.4V
6	0.0V	13	0.0V
7	0.0V	14	0.8V

IC501 - TA7320P

PIN	VOLTAGE
1	------
2	2.5V
3	1.8V
4	------
5	0.0V
6	2.3V
7	3.9V
8	3.9V
9	7.2V

IC601 - TA7310P

PIN	VOLTAGE
1	2.5V
2	2.3V
3	2.1V
4	2.7V
5	0.0V
6	5.5V
7	2.1V
8	8.2V
9	5.6V

IC602 - TC9105P

PIN	VOLTAGE	PIN	VOLTAGE
1	8.2V	10	0.0V
2	------	11	8.2V
3	3.7V	12	0.0V
4	1.6V	13	8.2V
5	3.6V	14	0.0V
6	5.5V	15	8.2V
7	------	16	8.2V
8	8.2V	17	3.6V
9	0.0V	18	0.0V

IC701 - TA205AP

PIN	VOLTAGE
1	13.8V
2	12.5V
3	3.8V
4	8.0V
5	1.5V
6	3.2V
7	3.4V
8	1.2V
9	0.0V
10	6.8V

IC702 - 78L08A

PIN	VOLTAGE
1	------
2	0.0V
3	13.2V

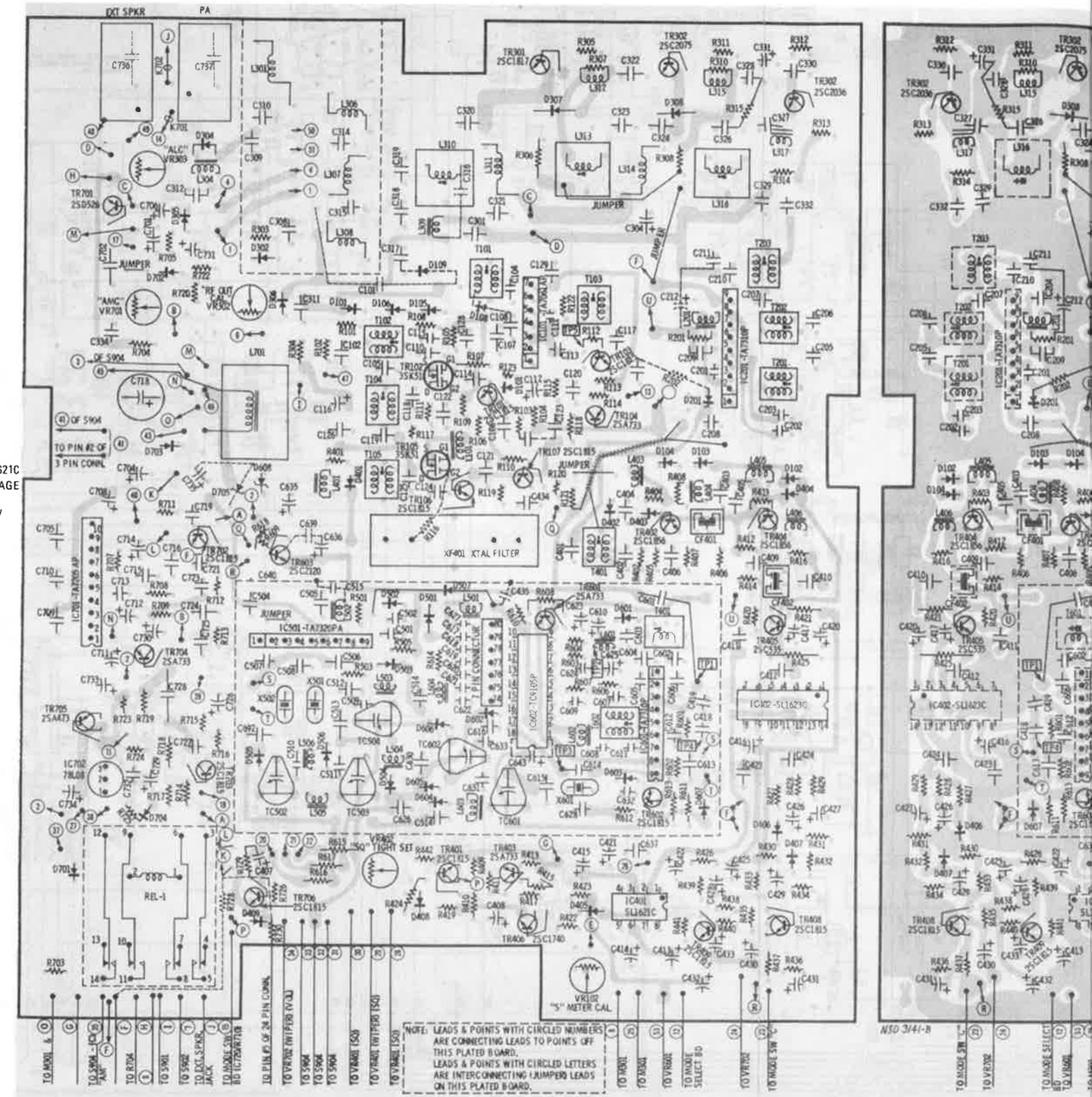

TOP VIEW – COMPONENT SIDE

CB555 BASE STATION CB RADIO MAIN PLATED BOARD DIAGRAM

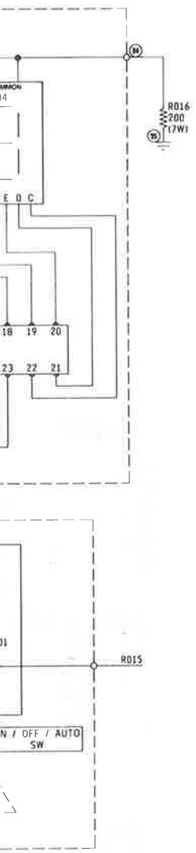

TRANSISTOR AND IC VOLTAGE READINGS

TR101 B – 0.5V E – 0.0V C – 5.9V	TR102 G1 – 1.9V G2 – 5.9V D – 13.8V S – 1.8V	TR103 B – 0.6V E – 0.0V C – 2.0V	TR104 B – 13.8V E – 13.8V C – 0.0V
TR105 G1 – 0.0V G2 – 0.0V D – 13.8V S – 0.0V	TR106 B – 0.0V E – 0.0V C – 0.0V	TR107 B – 4.0V E – 3.3V C – 8.2V	TR301 B – 0.55V E – 0.0V C – 5.3V
TR302 B – 0.5V E – 0.0V C – 5.3V	TR303 B – 3.1V E – 2.5V C – 13.2V	TR401 B – 0.7V E – 0.0V C – 0.0V	TR402 B – 2.0V E – 1.2V C – 7.8V
TR403 B – 6.9V E – 7.6V C – 7.5V	TR404 B – 1.3V E – 0.8V C – 7.8V	TR405 B – 0.7V E – 0.0V C – 3.9V	TR406 B – 1.7V E – 1.1V C – 1.1V
TR408 B – 1.8V E – 1.2V C – 3.8V	TR409 B – 1.0V E – 0.3V C – 4.5V	TR601 B – 8.2V E – 8.2V C – 0.0V	TR602 B – 3.9V E – 3.3V C – 8.2V
TR603 B – 8.8V E – 8.2V C – 13.8V	TR701 B – 6.0V E – 5.3V C – 13.2V	TR702 B – 0.0V E – 0.0V C – 8.2V	TR703 B – 1.1V E – 0.5V C – 3.0V
TR704 B – 0.0V E – 0.0V C – 0.0V	TR705 B – 13.2V E – 13.8V C – 7.8V	TR706 B – 0.0V E – 0.0V C – 0.0V	

IC101 - TA7061AP

PIN	VOLTAGE
1	1.9V
2	1.3V
3	13.8V
4	0.0V
5	13.8V
6	1.9V
7	1.9V

IC201 - TA7310P

PIN	VOLTAGE
1	2.6V
2	2.0V
3	1.3V
4	2.6V
5	0.0V
6	7.8V
7	2.1V
8	7.8V
9	13.8V

IC401 - SL1621C

PIN	VOLTAGE
1	1.1V
2	0.16V
3	1.8V
4	7.8V
5	0.9V
6	0.4V
7	.....
8	0.0V

IC402 - SL1623C

PIN	VOLTAGE	PIN	VOLTAGE
1	0.7V	8	4.0V
2	1.0V	9	7.8V
3	0.16V	10	5.8V
4	0.7V	11	0.0V
5	0.0V	12	1.4V
6	0.0V	13	0.0V
7	0.0V	14	0.8V

IC501 - TA7320P

PIN	VOLTAGE
1	.....
2	2.5V
3	1.8V
4	.....
5	0.0V
6	2.3V
7	3.9V
8	3.9V
9	7.2V

IC601 - TA7310P

PIN	VOLTAGE
1	2.5V
2	2.3V
3	2.1V
4	2.7V
5	0.0V
6	5.5V
7	2.1V
8	8.2V
9	5.6V

IC602 - TC9105P

PIN	VOLTAGE	PIN	VOLTAGE
1	8.2V	10	0.0V
2	.....	11	8.2V
3	3.7V	12	0.0V
4	1.6V	13	8.2V
5	3.6V	14	0.0V
6	5.5V	15	8.2V
7	.....	16	8.2V
8	8.2V	17	3.6V
9	0.0V	18	0.0V

IC701 - TA205AP

PIN	VOLTAGE
1	13.8V
2	12.5V
3	3.8V
4	8.0V
5	1.5V
6	3.2V
7	3.4V
8	1.2V
9	0.0V
10	6.8V

IC702 - 78L08A

PIN	VOLTAGE
1	.....
2	0.0V
3	13.2V

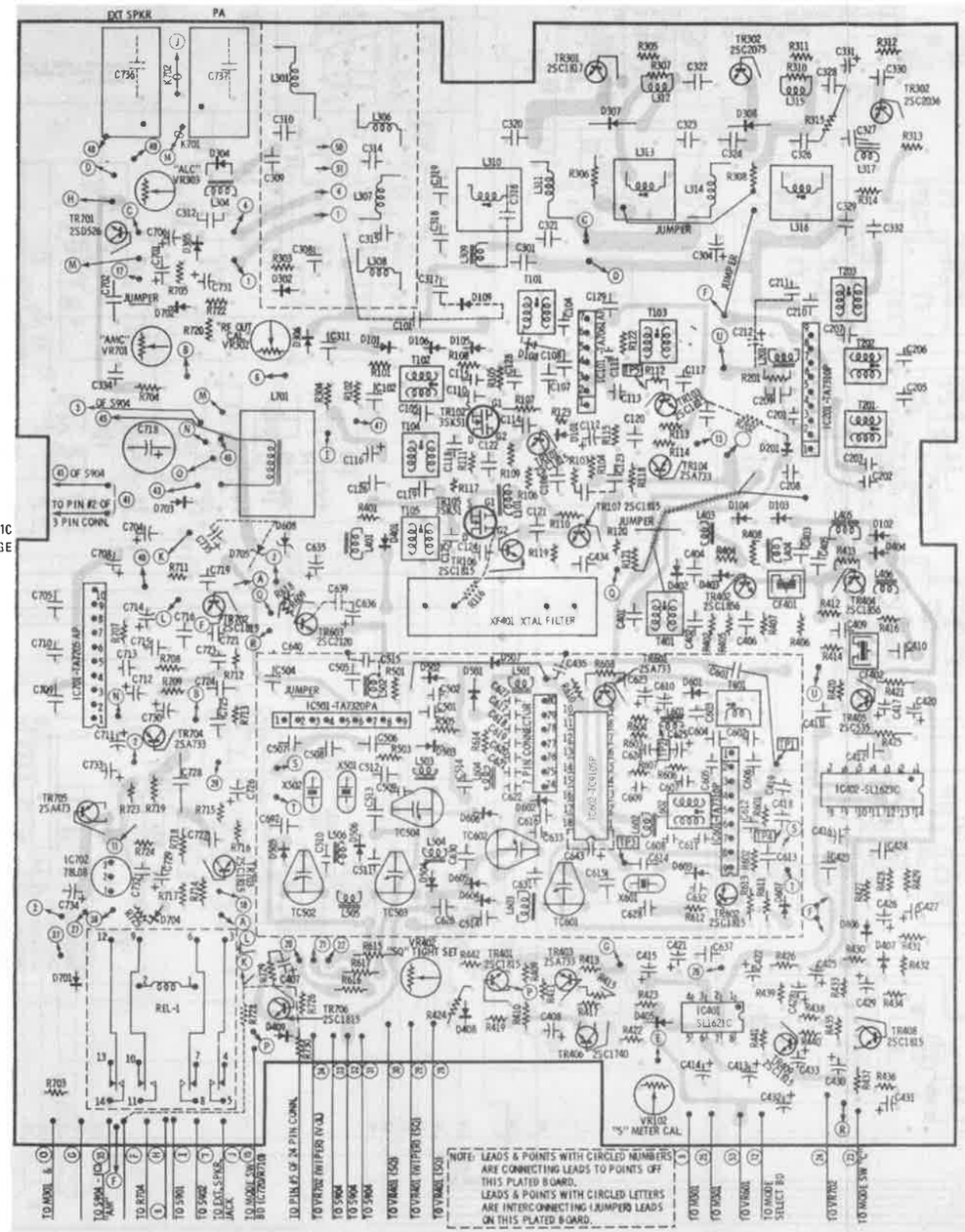

TOP VIEW – COMPONENT SIDE

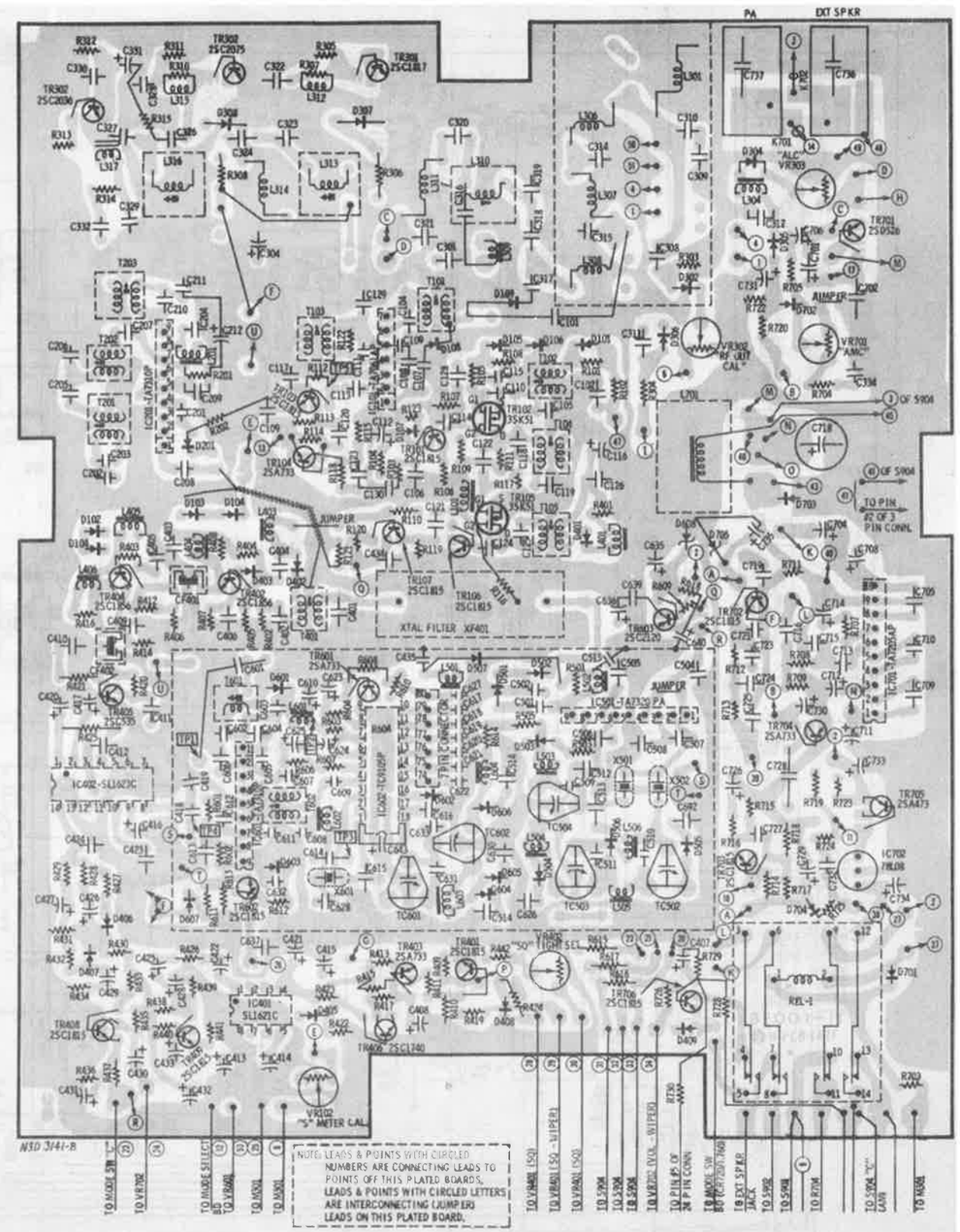

BOTTOM VIEW – WIRING SIDE

CB555 BASE STATION CB RADIO MAIN PLATED BOARD DIAGRAM

VOLTAGES TAKEN IN RECEIVED MODE, NO SIGNAL IN MEASURED FROM POINT INDICATED TO POWER SUPPLY GND.

IC001					
PIN	VOLTAGE	PIN	VOLTAGE	PIN	VOLTAGE
1	N/C	6	7.0	11	25.0
2	0.0	7	0.0	12	25.0
3	0.0	8	N/C	13	13.9
4	7.0	9	N/C	14	N/C
5	7.0	10	15.0		

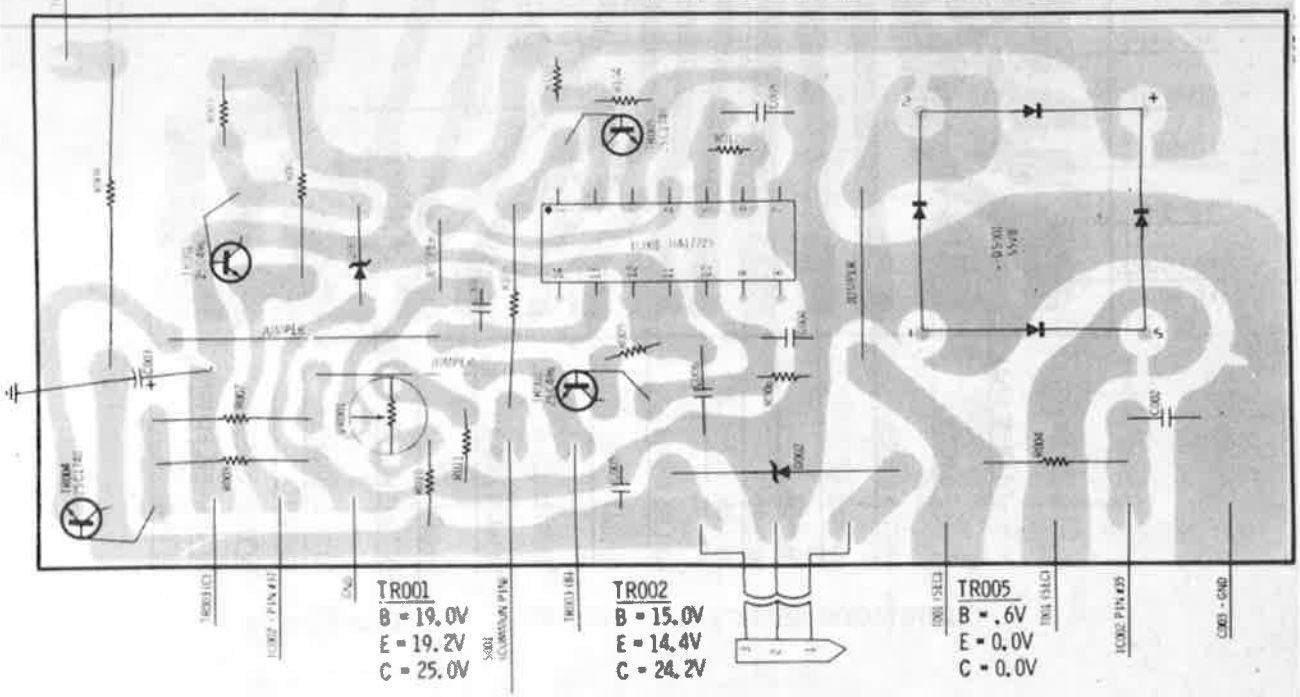

TOP VIEW – COMPONENT SIDE

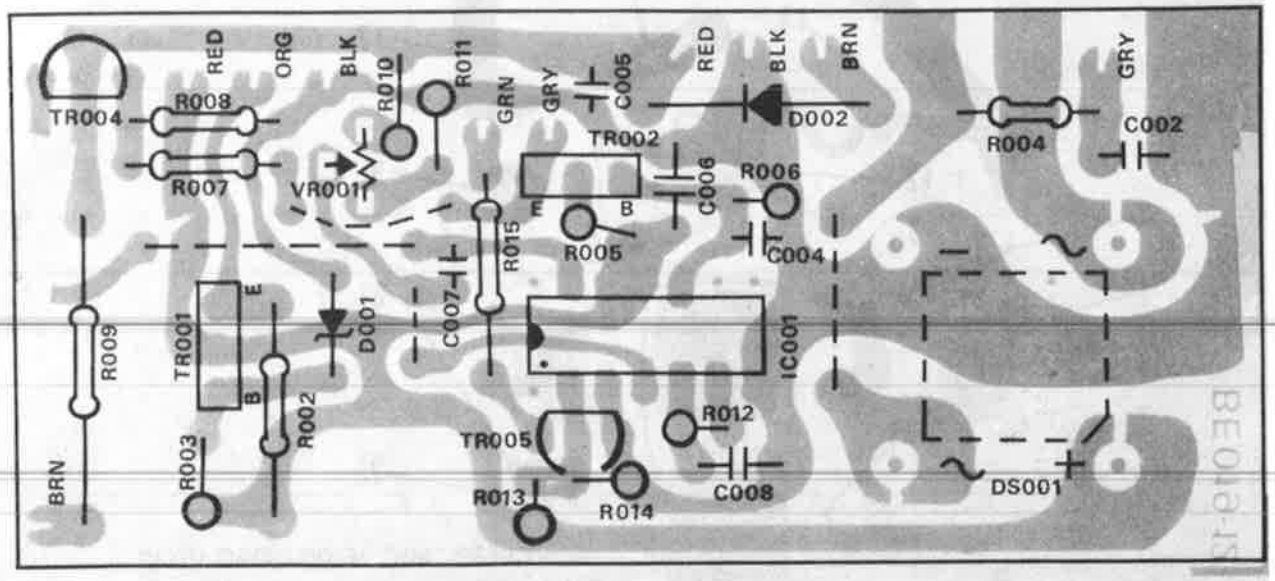

BOTTOM VIEW – WIRING SIDE

NSC-3162-B

CB555 POWER SUPPLY PLATED BOARD DIAGRAM

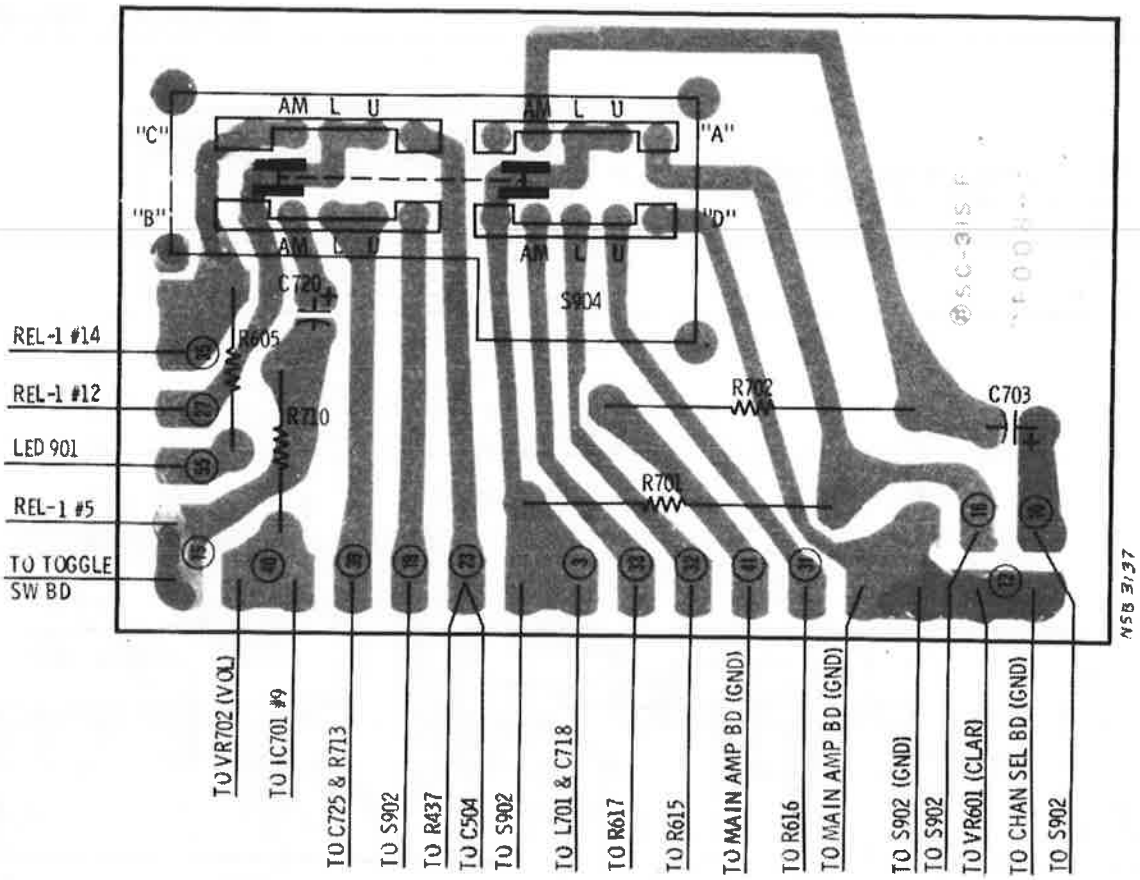

CB555 MODE SELECT SWITCH PLATED BOARD DIAGRAM

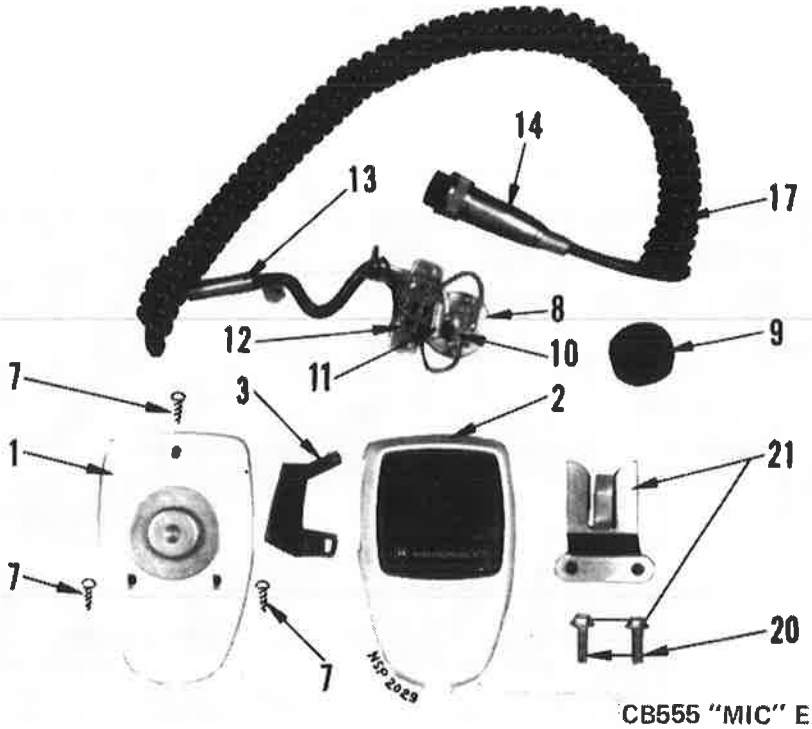

CB555 "MIC" EXPLODED VIEW

REF. NO.	PART NUMBER	DESCRIPTION
		ELECTRICAL PARTS
		CAPACITORS
C001	*8-40904T01	.0047MF CB555
C002	*21-41801G31	.01MF CB555
C003	*23-40834T01	3300MF 35V lytic CB555
C004, C005	*21-44938P04	.001MF 5% 50V CB555
C006	*8-44833J25	.1MF 10% 50V CB555
C007	*21-45322G22	100PF 10% 50V CB555
C008	*8-44833J25	.1MF 10% 50V CB555
C009	*21-41801G31	.01MF CB555
		CAPACITORS
C101	21-45322G15	27PF 10% 50V
C102	*21-41801G31	.01MF
C103	*21-41801G31	.01MF CM550
C104	8-44833J19	.033MF 10% 50V mylar
C105	21-45322G20	68PF 10% 50V
C106-C109	*21-41801G31	.01MF
C110	*21-44938P04	.001PF 5% 50V
C111	21-45322G21	82PF 10% 50V
C112	23-44333G08	10MF 16V lytic
C113	21-45322G18	47PF 5% 50V
C114-C115	*21-41801G31	.01MF
C116	*23-44333G24	47MF 10V lytic CM550
	23-44333G25	47MF 16V lytic CB555
C117	*21-44938P01	150PF 5% 50V
C118	21-45322G21	82PF 10% 50V
C119	*21-41801G31	.01MF
C120	21-45322G22	100PF 10% 50V
C121	*21-44938P14	6PF (CH) .25PF% 50V
C122	21-45322G19	56PF 10% 50V
C123, C124	*21-44938P04	.001PF 10% 50V
C125	21-45322G21	82PF 10% 50V
C126-C129	*21-41801G31	.01MF
C130	*21-44938P02	200PF 5% 50V
C201	21-45322G03	3PF 0.25PF 50V
C202	*21-41801G31	.01MF
C203	21-45322G20	68PF 10% 50V
C204	*21-41801G31	.01MF CM550
C205	21-45322G06	6PF 0.5PF 50V
C206	21-45322G20	68PF 10% 50V
C207	*21-44938P04	.001PF 10% 50V
C208	21-45322G05	5PF 0.25PF 50V
C209	*21-41-01G31	.01MF
C210	21-45322G20	68PF 10% 50V
C211	23-41059P01	0.1MF 35V lytic
Q212	23-41059P08	1MF 35V lytic
C301	21-45322G05	5PF 0.25PF 50V
C302	*21-44938P02	200PF 5% 50V
C303	21-45322E31	.01MF +80-20% 50V
C304	23-44333G31	100MF 16V lytic
C305	21-45322G05	5PF 0.25% 50V
C306	21-45322G31	.01MF +80-20% 50V
C307	*21-44938P02	200PF 5% 50V
C308, C309	21-45322G05	5PF 0.25PF 50V
C310	21-45322G06	6PF 0.5PF 50V
C311, C312	*21-41801G31	.01MF
C313	23-41059P05	0.47MF 35V lytic
C314, C315	*21-44938P02	200PF 5% 50V
C316	*21-44938P04	.001PF 5% 50V
C317	21-45322G22	100PF 10% 50V
C318	*21-44938P07	39PF 5% 50V
C319	*21-44938P09	82PF 5% 50V
C320	*21-41801G31	.01MF
C321	8-44833J13	.01MF 10% 50V mylar
C322	*21-41801G31	.01MF
C323	*21-44938P10	100PF (CH) 5% 50V
C324	*21-44938P07	39PF (CH) 5% 50V
C325	*21-41801G31	.01MF
C326	*21-44938P02	200PF 5% 50V
C327	*21-44938P10	100PF 5% 50V
C329, C330	*21-41801G31	.01MF
C331	23-41059P08	1MF 35V lytic
C332	8-44833J01	.001MF 10% 50V mylar
C333	21-45322G21	82PF 10% 50V
C334	*21-41801G31	.01MF CB555
C401	*21-44938P02	200PF 5% 50V
C402-C406	*21-41801G31	.01MF
C407	23-44333G12	22MF 10V lytic
C408	23-41059P01	0.1MF 35V lytic
C409	*21-41801G31	0.1MF
C410	8-44833J17	.022MF 10% 50V mylar
C411	*21-41801G31	.01MF
C412	8-44833J17	.022MF 10% 50V mylar
C413, C414	23-44333G24	47MF 10V lytic
C415	23-44333G30	100MF 10V lytic
C416	23-41059P05	.47MF 35V lytic
C417	23-41059P08	1MF 35V lytic
C418	21-45322G20	68PF 10% 50V
C419	21-45322G22	100PF 10% 50V
C420	23-44333G24	47MF 10V lytic
C421, C422	23-41059P05	.47MF 35V lytic
C423, C424	*21-41801G31	.01MF
C425	23-41059P05	.47MF 35V lytic
C426	23-41059P08	1MF 35V lytic
C427	23-44333G08	10MF 16V lytic
C428	23-41059P01	.1MF 35V lytic
C429	*23-44333G06	4.7MF 35V lytic CM550
	23-40066T02	4.7MF 10V lytic CB555
C430	23-41059P05	.47MF 35V lytic
C431	*23-40066T03	10MF 10V lytic
C432	23-44333G08	10MF 16V lytic
C433	23-41059P01	10MF 16V lytic
C434	*21-41801G31	.01MF

SPECIFICATIONS SUBJECT TO CHANGE WITHOUT NOTICE.

* DENOTES NEW ITEM APPEARING IN ANY LIST FOR FIRST TIME.

REF. NO.	PART NUMBER	DESCRIPTION
		ELECTRICAL PARTS (cont)
C435	*21-41801G31	.01MF
C501	*21-41801G31	.01MF
C502	21-45322G18	47PF 5% 50V
C503-C505	*21-41801G31	.01MF
C506	21-45322G21	82PF 10% 50V
C507	*21-44938P02	200PF 5% 50V
C508	*21-44938P03	300PF 5% 50V
C509, C510	*21-44938P06	27PF (CH) 5% 50V
C511	*21-44938P07	39PF (CH) 5% 50V
C512-C515	*21-41801G31	.01MF
C601	*21-44938P04	.001MF 10% 50V
C602	*21-44938P12	15PF (RH) 5% 50V
C603	*21-44938P11	12PF (RH) 5% 50V
C604	*21-44938P13	100PF (RH) 5% 50V
C605	*21-44938P08	56PF (CH) 5% 50V
C606	21-41701J38	33PF (CH) 5% 50V
C607	21-45322G01	1PF 0.25% 50V
C608	21-45322G18	47PF 5% 50V
C609	21-45322G02	2PF 0.25% 50V
C610	23-41059P01	0.1MF 35V lytic
C611	21-45322G20	68PF 10% 50V
C612	*21-44938P04	.001MF 10% 50V
C613-C615	*21-41801G31	.01MF
C616	21-45322G22	100PF 10% 50V
C617-C622	*21-44938P04	.001MF 10% 50V
C623	23-41059P01	.1MF 35V lytic
C624, C625	23-41059P08	1MF 35V lytic
C626	*21-41801G31	.01MF CM550
C627	*21-44938P04	.001MF 10% 50V
C628	*21-44938P02	200PF 5% 50V
C629	8-44833J17	.022MF 10% 50V mylar
C630	*21-41801G31	.01MF
C631	*21-44938P05	22PF (CH) 5% 50V
C632	*21-44938P11	12PF (RH) 5% 50V
C633	*21-44938P06	27PF (CH) 5% 50V
C634	*21-41801G31	.01MF
C635, C636	23-44333G37	220MF 16V lytic
C637	*21-41801G31	.01MF
C638	*21-44938P04	.001MF 10% 50V
C639	*21-41801G31	.01MF
C640	23-44333G08	10MF 16V lytic
C641	*21-41801G31	.01MF
C643	23-41059P08	1MF 35V lytic
C701, C702	23-41059P05	.47MF 35V lytic
C703	23-44333G25	47MF 16V lytic
C704	23-44333G37	220MF 16V lytic
C705	21-45322G22	100PF 10% 50V
C706	23-44333G08	10MF 16V lytic
C708	23-44333G24	47MF 35V lytic

REF. NO.	PART NUMBER	DESCRIPTION
C709	8-44833J19	.033MF MF 10% 50V mylar
C710	21-45322G17	39PF 5% 50V
C711	23-44333G08	10MF 16V lytic
C712	23-44333G19	33MF 16V lytic
C713	8-44833J07	.0033MF 10% 50V mylar
C714	*23-40066T02	4.7MF 10V lytic
C715, C716	8-44833J11	.0068MF 10% 50V mylar
C718	23-44333G60	2200MF 16V lytic
C719	23-41059P05	.47MF 35V lytic
C720	23-40134G03	10MF 10V lytic
C721	8-44833J01	.001MF 10% 50V mylar
C723	8-44833J07	.0033MF 10% 50V mylar
C724	*8-44833J15	.015MF 10% 50V mylar
C725	*21-41801G31	.01MF
C726	23-44333G08	10MF 16V lytic
C727	8-44833J01	.001MF 10% 50V mylar
C728	8-44833J31	.33MF 10% 50V mylar
C729, C730	23-41059P08	1MF 35V lytic
C731	23-44333G12	22MF 10V lytic
C732	8-44833J17	.022MF 10% 50V mylar
C733	23-41059P05	.47MF 35V lytic
C734	23-44333G36	220MF 10V lytic
C735	23-44333G30	100MF 10V lytic
C736-C738	*21-44938P04	.001MF 10% 50V
C739, C740	*21-40071T01	.001MF CM550
C739, 740	*21-40812T01	.001MF CB555
C741	*21-44938P04	.001MF 10% 50V
TC501	*20-43248J04	TRIMMER, 20PF
TC502	*20-43248J04	TRIMMER, 20PF
TC503	*20-43248J04	TRIMMER, 20PF
TC601	*20-43248J05	TRIMMER, 30PF
TC602	*20-43248J05	TRIMMER, 30PF
		MISCELLANEOUS ELECTRICAL PARTS
K301	*76-44936P01	BEAD, FERRITE
K701-K706	*76-40532T01	BEAD, FERRITE
	65-40282R32	BULB, meter
X501	*48-44929P01	CRYSTAL, 10.695MHz
X502	*48-44930P01	CRYSTAL, 10.700MHz
X601	*48-44931P01	CRYSTAL, 10.240MHz
D001	*48-40832T01	DIODE, WZ197
D002	*48-40833T01	DIODE, GP30A
DS001	*18-40831T01	DIODE, S5VB10
D101	*48-40531T01	DIODE IS2222
D102-D109	48-134816	DIODE IS1555
D201	48-134816	DIODE IS1555
D301	48-41768G01	DIODE, IN60P
D302	48-134816	DIODE, IS1555
D303	48-41768G01	DIODE, IN60P
D304, D305	48-134816	DIODE, IS1555

SPECIFICATIONS SUBJECT TO CHANGE WITHOUT NOTICE.

* DENOTES NEW ITEM APPEARING IN ANY LIST FOR FIRST TIME.

REF. NO.	PART NUMBER	DESCRIPTION
		MISCELLANEOUS ELECTRICAL PARTS (cont)
D306, D307	*48-44898P01	DIODE IN4003
D308	*48-44899P01	DIODE IS1586
D401-D406	48-134816	DIODE IS1555
D407	*48-44896P01	DIODE ISS43
D408	48-41768G01	DIODE IN60P
D409	48-134816	DIODE IS1555
D501	*48-44902P01	DIODE BA379
D502	*48-44897P01	DIODE IS2588
D503	48-134816	DIODE IS1555
D504-D506	*48-44897P01	DIODE IS2588
D507	48-134816	DIODE IS1555
D601	*48-44976P01	DIODE IS2208
D602	48-134816	DIODE IS1555
D603	*48-44976P01	DIODE IS2208
D604-D606	*48-44897P01	DIODE IS2588
D607	48-134816	DIODE IS1555
D608	*48-44901P01	DIODE XZ086
D701	*48-44898P01	DIODE IN4003
D702	48-134816	DIODE IS1555
D703	*48-44898P01	DIODE IN4003
D704	48-134816	DIODE IS1555
D705	*48-44901P01	DIODE XZ086
CF401, CF402	*91-44932P01	FILTER, ceramic; 10.7MHz (RED)
XF401	*91-44928P01	FILTER, crystal; 10.6975MHz
J801, J802	*9-44935P01	JACK, PA & EXT SPKR
LD001-LD004	48-40045T01	L.E.D., clock CB555
LD801, LD802	*48-40045T01	L.E.D. channel indicator
L901	*48-40043T01	L.E.D. TX
LD902-LD904	*48-40043T02	L.E.D.; AM, LOWER, UPPER
M301	*72-40039T01	METER
	*50-40463R01	MICROPHONE, CM550
	*1-40201R72	MICROPHONE, CB555
REL-1	*80-44934P01	RELAY
	*50-40059T01	SPEAKER, 3 1/2 4 OHM
		INTEGRATED CIRCUITS
IC001	*51-40829T01	HA 17723 CB555
IC002	*51-40836T01	HD 36990 CLOCK CB555
IC101	*51-44977P01	TA 7061 AP RF AMP/ NOISE LIMITER
IC201	*51-44905P01	TA7310P TRANSMITTER MIXER
IC401	*51-44903P01	SL1621C RCVR AGC VOLTAGE GEN (SSB ONLY)
IC402	*51-44904P01	SL 1623C RCVR DET & 'AM' AGC VOLTAGE GEN
IC501	*51-44906P01	TA 7320P SSB GEN
IC601	*51-44905P01	TA 7310P PLL VCO & MIXER
IC602	*51-44907P01	TC 9105P PLL REF OSC & PROGRAM
IC701	*51-44908P01	TA 7205AP AUDIO AMP
IC702	*51-44909P01	78L08A REGULATOR

REF. NO.	PART NUMBER	DESCRIPTION
		COILS & CHOKES
L101	*24-44921P06	CHOKE, 1.5MH
L201	*24-44921P05	CHOKE, 220MH
L301	*24-44913P01	CHOKE, coil
L302-L304	*24-44921P05	CHOKE, 220MH
L306, L307	*24-44911P03	COIL, RF
L308	*24-44911P02	COIL, RF
L309	*24-44921P05	CHOKE, 220MH
L310	*24-44920P01	COIL
L311	*24-44910P01	COIL, RF
L312	*24-44912P01	COIL, damping
L313	*24-44920P01	COIL
L314	*24-44911P01	COIL, RF
L315	*24-44912P01	COIL
L316	*24-44919P01	COIL
L317	*24-44921P05	CHOKE, 220MH
L318	*24-40074T01	COIL
L401	*24-44921P04	CHOKE, 68MH
L403	*24-44921P05	CHOKE, 220MH
L404-L406	*24-44921P04	CHOKE, 68MH
L501	*24-44921P05	CHOKE, 220MH
L502	24-45294G09	CHOKE, 4.7MH
L503	*24-44921P05	CHOKE, 220MH
L504	*24-44921P03	CHOKE, 33MH
L505	*24-44921P05	CHOKE, 220MH
L506	*24-44921P01	CHOKE, 3.3MH
L601	*24-44921P02	CHOKE, 10MH
L602	24-45294G09	CHOKE, 4.7MH
L603	*24-44921P05	CHOKE, 220MH
L701	*25-44927P01	CHOKE, COIL; power
L702, L703	*24-40534T01	CHOKE, COIL; connector
		TRANSISTORS
TR001	*48-44211G01	2SC496 CB555
TR002	*48-44211G01	2SC496 CB555
TR003	48-40887T01	2SD469 CB555
TR004	*48-40830T01	2SC1740 CB555
TR005	*48-40830T01	2SC1740 CB555
		TRANSISTORS
TR101	*48-44884P01	2SC1815 AGC AMP
TR102	*48-44886P01	FET 3SK51 RCVR RF AMP
TR103	*48-44884P01	2SC1815 NOISE BLANKER PULSE DETECTOR
TR104	*48-44885P01	2SA733 NOISE BLANKER PULSE AMP
TR105	*48-44886P01	FET 3SK51 RCVR MIXER
TR106	*48-44884P01	2SC1815 NOISE BLANKER PULSE SWITCH
TR107	*48-44884P01	2SC1815 RCVR INJECTION AMP
TR301	*48-44890P01	2SC1817 RF POWER FINAL AMP
TR302	*48-44891P01	2SC2075 RF POWER DRIVER
TR303	*48-44892P01	2SC2036 RF POWER PRE-DRIVER
TR401	*48-44884P01	2SC1815 SQUELCH AMP
TR402	*48-44888P01	2SC1856 IF AMP
TR403	*48-44885P01	2SA733 SQUELCH AMP

SPECIFICATIONS SUBJECT TO CHANGE WITHOUT NOTICE.

* DENOTES NEW ITEM APPEARING IN ANY LIST FOR FIRST TIME.

REF. NO.	PART NUMBER	DESCRIPTION
		MISCELLANEOUS ELECTRICAL PARTS (cont)
TR404	*48-44888P01	2SC1856 IF AMP
TR405	*48-44889P01	2SC535 IF AMP
TR406	*48-44887P01	2SC454 SQUELCH AMP
TR408	*48-44884P01	2SC1815 AM AUDIO AMP
TR409	*48-44884P01	2SC1815 SSB AUDIO AMP
TR601	*48-44885P01	2SA733 PLL UNLOCK SWITCHING
TR602	*48-44884P01	2SC1815 CLARIFIER SWITCH
TR603	*48-44895P01	2SC2120 REGULATOR
TR701	*48-40004S11	04S11 AM MODULATOR
TR702	*48-44884P01	2SC1815 SSB AUDIO AMP
TR703	*48-44884P01	2SC1815 MICROPHONE AMP
TR704	*48-44885P01	2SA733 ALC & AMC CONTROLLER
TR705	48-43241G01	2SA473 CURRENT BOOSTER
TR706	*48-44884P01	2SC1815 SQUELCH CONTROLLER
		RESISTORS
		ALL RESISTORS ARE 5% 1/4W THOSE LISTED ARE UNIQUE VALUE
R001	*6-10053D01	3.9M 5% 1/2W CB555
R002	*6-44924P06	120 5% 1W WW CB555
R005	*6-44924P07	150 5% 1W WW CB555
R009	*6-44924P08	0.1 5% 2W WW CB555
R016	*6-40906T01	200 7W WW CB555
R306	*6-44924P02	100 5% 2W
R308	*6-44924P01	150 5% 2W
R701	*6-44924P03	180 5% 1W
R702	*6-44924P04	200 5% 1W
R801, R802	*18-40073T01	RESISTOR, module 1.8KX7
VR001	*18-41732G07	CONTROL, 1K CB555
VR002	*18-40056T01	CONTROL, 10K CB555
VR101	*18-40056T01	CONTROL, RF GAIN 10K
VR102	*18-44933P01	CONTROL, 47K
VR301	*18-40038T01	CONTROL, SWR 5K
VR302	18-41732G06	CONTROL, 10K
VR303	*18-41732G05	CONTROL, 3.3K
VR401	*18-44933P01	CONTROL, 47K
VR402	*18-40678T01	CONTROL, squelch; 10K
VR601	*18-40055T01	CONTROL, clarifier; 10K
VR701	18-41732G06	CONTROL, 10K
VR702	*18-40056T01	CONTROL, volume 10K CM550
VR702	*18-40679T01	CONTROL, volume 10K CB555
		SWITCHES
S001	*40-40826T01	TOGGLE, ON/OFF/AUTO CB555
S002	*40-40827T01	TOGGLE, EXTEND/CB/PA CB555
S003	*40-40826T01	TOGGLE, SWR/S-RF/CAL CB555
S701		ON-OFF PART OF VR702 CM550
S801	*40-40047T01	CH SELECTOR
S901	*40-40040T01	TOGGLE, Extender CM550
S902	*40-44811P01	TOGGLE, P.A. CM550
S903	*40-44797P01	TOGGLE, SWR CM550
S904	*40-40037T01	MODE, AM-LSB-USB
		TRANSFORMERS
T001	*25-40888T01	POWER SUPPLY
T101	*24-44915P01	IF
T102	*24-44916P01	IF
T103, T104	*24-44914P01	IF
T105	*24-44918P01	IF
T201-T203	*24-44914P01	TX MIX
T401	*24-44917P01	IF
T601, T602	*24-44914P01	PLL
		MECHANICAL PARTS CM550 & CB555
1	*1-40025T01	ESCUTCHEON, trim; incl overlay & line CM550
	*1-40841T01	ESCUTCHEON, trim; incl overlay & line CB555
2	*36-40060T01	KNOB, channel selector CM550
	*36-40842T01	KNOB, channel selector CB555
3	*36-40533T01	KNOB, VOL SQ, RF, AM-LSB-USB, CLAR CM550
	*36-40843T01	KNOB, MIC GAIN, SQ, RF, AM-LSB-USB, CLAR CB555
4	*36-40006T01	KNOB, SWR, CAL CM550
	*36-40844T01	BUTTON, clock; A,F,S CB555
	*3-44205G16	SCREW, M3X5 CM550
5	*1-40500T46	BOARD, PLATED: CLOCK, (COMPL) CB555
6	*7-40521T01	ESCUTCHEON, sub
7	*1-40200T11	BOARD, PLATED: MODE (COMPL) CM550
	*1-40500T43	BOARD, PLATED: MODE (COMPL) CB555
8	*1-40200T14	BOARD, PLATED: CH. SEL (COMPL) CM550 CB555
9	4-40070G14	WASHER, M7
10	*2-40000G27	NUT, M7X0.75
11	*4-40072G13	WASHER, lock; M9-1
12	2-40000G20	NUT, M9X0.75
13	*1-40200T13	BOARD, plated L.E.D. (COMPL) CM550
	*1-40500T42	BOARD, plated L.E.D. (COMPL) CB555
14	3-44205G01	SCREW, tpg. M3X6
15	*7-40011T01	BRACKET, meter mtg. CM550
	*7-40845T01	BRACKET, meter mtg. CB555
16	*1-40200T07	BOARD, plated, SWR (COMPL) CM550, CB555
17	*43-40019T01	CUSHION, "S" meter CM550
	*43-40846T01	CUSHION, "S" meter CB555
18	*84-40041T01	BOARD, plated; toggle sw. (less components) CM550
	*84-40847T01	BOARD, plated; toggle sw (less components) CB555
19	3-40011G31	SCREW, tpg. M2.6X4 CM550
	3-40012G09	SCREW, tpg. M3X8 CB555
20	*15-40005T01	COVER, top CM550
	*15-40389R01	COVER, top; incl spkr. grill CB555
20-3	*43-40009T01	RUBBER, spacer CM550
20-4	50-03016A01	SPEAKER, 4Ω 3 1/2" CM550
20-5	*2-40028T01	NUT, speed CM550
21	3-43997P07	SCREW, tpg. M3X6 CM550
	*7-40849T01	BRACKET, chassis mtg. CB555

SPECIFICATIONS SUBJECT TO CHANGE WITHOUT NOTICE.

* DENOTES NEW ITEM APPEARING IN ANY LIST FOR FIRST TIME.

NOTE: ALL PARTS LISTED ARE RECOMMENDED REPLACEMENT PARTS

REF. NO.	PART NUMBER	DESCRIPTION
		MECHANICAL PARTS (cont)
22	*1-40200T10	CHASSIS, left side incl. mic conn CM550
23	27-40003T01	CHASSIS, right side CM550
	*29-40850T01	TERMINAL, strip CB555
24		CHASSIS, rear
25		PAD CM550
	*7-40851T01	BRACKET, toggle sw CB555
26	*14-40018T01	CLOTH CM550
	*14-40852T01	CLOTH CB555
27		PAD CM550
	*7-40853T01	CLIP, ground CB555
28	*9-40762T01	RECEPTACLE, ant
29	*29-40522T01	WASHER, lug
30	*3-40523T01	WASHER, spring
31	*2-40524T01	NUT, 5/8-24NEF (M16X10)
32	*1-40052T01	RECEPTACLE, power assy DC
33	3-40011G18	SCREW, mch (M3X6)
34		BOARD, plated CB MAIN
35	*7-40022T01	HEAT SINK, side
36	*7-40023T01	HEAT SINK, rear
37	3-40011G26	SCREW, mch. M3X10 CM550
	3-40011G15	SCREW, mch. M3X10 CB555
38	3-40011G44	SCREW, mch. M2.6X8
39	*43-40032T01	SPACER
40	14-40472G02	SPACER
41	4-40071G01	WASHER, M3
42	*2-40000G08	NUT, M3
43	4-40071G08	WASHER, M2.6
44	2-40000G01	NUT M2.6
45	*1-40525T01	SHIELD, bottom
46	*3-40019G33	SCREW, tpg. M3X8
47	*15-40004T01	COVER, bottom CM550
	15-40148R01	COVER, bottom CB555
48	*41-40051T01	WASHER, gnd CM550
	*29-40855T01	TERMINAL, lug CB555
49	*26-40526T01	SHIELD, plate
50	3-44205G07	SCREW, tpg. CM550
	75-40325R01	FEET, CB555
51	*30-44880P01	CABLE, power; incl fuse rup. CM550
	3-03125A01	SCREW, tpg. CB555
52	*7-40017T01	BRACKET
53	*7-40527T01	HEAT SINK
54	*43-40528T01	SPACER
55	*43-40529T01	SPACER
	*4-40530T01	WASHER, shield
57	*26-40013T01	SHIELD, cover; PLL upper
58	*26-40012T01	SHIELD, cover; PLL lower
59	*26-40031T01	SHIELD, cover; Ant
60	*26-40020T01	SHIELD, cover; crystal
61		LABEL
62		RIVET
63		CHASSIS, power supply CB555
64		HEAT SINK CB555
65	*14-40861T01	WASHER, insulating CB555
66	*15-40862T01	COVER, transistor CB555
67	*84-40835T01	BOARD, plated; power supply (less components) CB555
68	*9-40863T01	HOLDER, fuse CB555
69	*55-40864T01	RETAINER, AC cord CB555
70	*65-40865T01	FUSE, SLO-BLOW; 1 1/2A 250V CB555
71	*28-40866T01	CORD AC, power supply CB555
72	9-40164R01	RECEPTACLE, Mic jack CB555
73		WASHER, (part of ref 72) CB555
74		WASHER, spring, (part of ref 72)
75		NUT, (part of ref 72)
76	*3-40838T02	SCREW, tpg; M4X16 CB555
77	*3-40838T03	SCREW, tpg; M4X10 CB555
78	*4-40070G05	WASHER, M3 CB555
79	*3-40838T04	SCREW, mch. M3X18 CB555
80	*3-40011G29	SCREW, mch. M4X0.7X8 CB555
81	*4-40071G03	WASHER, M4 CB555
82	3-40011G28	SCREW, mch. M3X16
83	3-40011G26	SCREW, mch. M3X8 CB555
84	4-40071G01	WASHER, M3 CB555
85	*43-40917T01	WASHER, M14 CB555
86	*3-40838T05	SCREW, mch. M3X18 CB555
87	*4-40072G01	WASHER, lock M3 CB555
		MICROPHONE CM550
	50-40463R01	MICROPHONE, complete with cable and plug use TMN 6138A
1	*1-40282R45	HOUSING, microphone; rear
2	*1-40282R54	HOUSING, microphone; front
3	38-03007A01	PUSHBUTTON
		WASHER, flat; (part of ref #1)
		WASHER, flat; (part of ref. #1)
		RIVET, shoulder; (part of ref.#1)
7	3-03125A01	SCREW, tpg; 5-20X.625, COVER screws
8	59-03002A01	CARTRIDGE, microphone; dynamic
9	35-03023A01	CLOTH, grill mic.
10	1-80706D19	BOARD, plated; complete w/parts
11	23-03035A13	CAP 1MF 25V lytic
12	40-03067A01	SWITCH, slide; DPDT
13	41-03137A01	SPRING, strain relief
14	ST1366	CONNECTOR, mic cable complete
17	30-03014A01	CORD, coiled
18	*48-03003A05	DIODE 03A05
19	18-40365R01	CONTROL, gain
20	*3-139913	SCREW, tpg. 8-18X1/2
21	-ST1368	HOLDER, mic; incl screws
	21-03246A01	CAP .001MF +80-20 Y5S
		MICROPHONE CB555
	*1-40201R72	MICROPHONE, complete with cable and plug
1	*1-40282R42	HOUSING, microphone; rear
2	1-40292R55	HOUSING, microphone; front
3	38-03007A01	PUSHBUTTON

SPECIFICATIONS SUBJECT TO CHANGE WITHOUT NOTICE.

* DENOTES NEW ITEM APPEARING IN ANY LIST FOR FIRST TIME.

REF. NO.	PART NUMBER	DESCRIPTION
		MECHANICAL PARTS (cont)
		WASHER, (part of ref #1)
		WASHER, (part of ref #1)
		RIVET, (part of ref #1)
7	3-03125A01	SCREW, tpg; 5-20X.625
8	59-03002A01	CARTRIDGE, microphone; dynamic
9	35-03023A01	CLOTH, grille
10	51-03009A06	BOARD, plated; complete w/ control parts
11	23-03035A13	CAP 1MF 25V lytic
12	40-03067A01	SWITCH, slide; DPD7
13	41-03137A01	SPRING, strain relief
14	ST1366	CONNECTOR, mic cable complete
17	30-03014A01	CORD, coiled
20	*3-139913	SCREW, tpg; 8-18X1/2
21	ST1368	HOLDER, mick; incl screws
		MISCELLANEOUS MECHANICAL PARTS
	*7-40026T01	BRACKET, mtg. CM550
	*9-40885T01	CABLE, assy. 3P female CB555
	*28-40869T01	CABLE, assy: 3P male CB555
	*9-40886T01	CABLE, assy: 24P female CB555
	*28-4Q870T01	CABLE, assy: 24P male CB555
	*30-40044T01	CABLE, assy: 6P FM connector CB555
	*30-40048T01	CABLE, assy. 7P FM connector
	*30-44880P01	CABLE, DC POWER CM550
	*1-40200T20	KIT, installation; incl the following items ●CM550
	3-43315G02	●BOLT, mtg. (2) CM550
	*9-44881P01	●CONNECTOR (1) CM550
	7-43923P01	●HOLDER, mike (1) CM550
	3-40012G14	●SCREW, tpg; mic holder (2) CM550
	3-40012G39	●SCREW, tpg; brkt mtg. (3) CM550
	*15-40014T01	LENS, ch. ind. CM550
	3-03218A01	SCREW, wing (2) CM550
	*28-40049T01	SOCKET, 6P male connector (on ch selector board) CM550
	*28-40049T06	SOCKET, 7P male connector (on main board) CB555

REF. NO.	PART NUMBER	DESCRIPTION

SPECIFICATIONS SUBJECT TO CHANGE WITHOUT NOTICE.

* DENOTES NEW ITEM APPEARING IN ANY LIST FOR FIRST TIME.