For Supplier Address See PHOTOFACT Index

NOTE

Repair or adjustment of transmitter circuits must be under supervision of a person with first-or second-class radiotelephone license.
(Refer to FCC Rules and Regulations Part 95, Subpart C & D.)

The frequency of the transmitter should be checked periodically with a secondary frequency standard to insure proper and legal operation.

Best results will be obtained when adjusting the final RF output circuit if the antenna normally used is connected and the chassis is as nearly in the cabinet as possible.

Connect either 50-ohm dummy load or the normally used antenna system.

Model AR-44

HOWARD W. SAMS & CO., INC. Indianapolis, Indiana 46206

ALIGNMENT INSTRUCTIONS

CAUTION: Use isolation transformer or observe polarity when connecting test equipment.
Maintain line voltage at 120V AC. Allow a 15-minute warm-up period.
Adjustments made with 13.8 volt DC input.
Connect low sides of test equipment to ground unless specified otherwise.
Connect 50-ohm dummy load or antenna before keying transmitter.
Connect microphone.

Suggested Alignment Tools:	GC ELECTRONICS:
L1 thru L4, L14 thru L18	9440
L10	9091, 8728-A, 8728
L5, L6, L7	5009, 8728-A, 8728

SYNTHESIZER ALIGNMENT

TEST EQUIPMENT	TRANSCEIVER	ADJUST	REMARKS
Input of frequency counter to TP10 (Junction of C110 and C111).	Ch. 19		Check for 10.240MHz.
Input of DC meter to TP2 (Junction of R59 and R60).	Ch. 40	L15	Adjust for 2.00 volts.
	Ch. 40, XMT		Check for 3.25 volts.
Input of oscilloscope to TP3 (L16 Secondary).	Ch. 19	L16	Adjust for maximum (2.3 volts p-p typical). (See Figure 1.)
Input of frequency counter to TP3 (L16 Secondary).	Ch. 1		Check for 16.270MHz. Check all channels. (See Truth Chart for correct frequencies.)
Input of frequency counter to TP3 (L16 Secondary).	Ch. 1, XMT		Check for 16.725MHz. Check all channels. (See Truth Chart for correct frequencies.)
Input of frequency counter to antenna jack.	Ch. 1, XMT		Check for 26.965MHz.

RECEIVER ALIGNMENT

Connect an AC VTVM or AF wattmeter across speaker voice coil.
Adjust volume control to obtain a suitable indication.
Set generator output low enough to prevent AGC limiting.
ANL Off, RF Gain Maximum, Squelch MINIMUM.

TEST EQUIPMENT	TRANSCEIVER	ADJUST	REMARKS
Output of signal generator thru .01uF to TP11 (FET2, Gate). 455kHz, 1000Hz @ 30% modulation.	Ch. 19	L7,L6,L5	Adjust for maximum output.
Output of signal generator to antenna jack. 27.185MHz, 1000Hz @ 30% modulation.	Ch. 19	L4,L3,L2,L1	Adjust for maximum output.

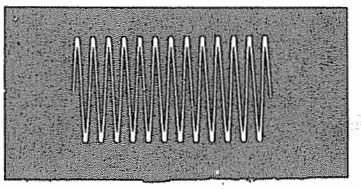

Figure 1

RECEIVER ADJUSTMENTS

Connect an AC VTVM or AF wattmeter across speaker voice coil.
Adjust volume control to obtain a suitable indication.
RF Gain Maximum, ANL Off, Squelch MINIMUM.

TEST EQUIPMENT	TRANSCEIVER	ADJUST	REMARKS
Output of signal generator to antenna jack. 27.185MHz, 1000Hz @ 30% modulation. Output .4uV.	Ch. 19 Volume Maximum	VR2	IF GAIN Adjust for 2 volts audio.
Output of signal generator to antenna jack. 27.185MHz, 1000Hz @ 30% modulation. Output 1000uV.	Ch. 19 Squelch Maximum	VR4	SQUELCH RANGE Adjust so squelch just breaks.
Output of signal generator to antenna jack. 27.185MHz, 1000Hz @ 30% modulation. Output 100uV.	Ch. 19	VR1	SIG METER Adjust for 9 on signal scale of meter.

TRANSMITTER ALIGNMENT

Connect an RF wattmeter and 50-ohm, 25-watt dummy load to antenna connector.
NOTE: Be sure to check transmit frequency and power on all active channels after alignment of transmitter.
See page 4 for channel frequencies.

TEST EQUIPMENT	TRANSCEIVER	ADJUST	REMARKS
Input of RF wattmeter to antenna input.	Ch. 19	L18,L17,L14, L10	Adjust for maximum.
Input of RF wattmeter to antenna input.	Ch. 19	L10	Adjust for 3.8 watts.

TRANSMITTER ADJUSTMENTS

Connect an RF wattmeter and 50-ohm, 25-watt dummy load to antenna connector.
NOTE: Be sure to check transmit frequency and power on all active channels after adjustment of transmitter.
See page 4 for channel frequencies.

TEST EQUIPMENT	TRANSCEIVER	ADJUST	REMARKS
Input of oscilloscope or harmonic meter to antenna jack. Inject a 1000Hz, 100mV signal at Mic input.	Ch. 19 Mic Gain Maximum	VR5	AMC Adjust for 95% modulation. (See Figure 2.)
Connect an RF wattmeter and 50-ohm, 25-watt dummy load to antenna connector.	Ch. 19	VR3	TX PWR METER Adjust so TX PWR meter agrees with RF wattmeter.

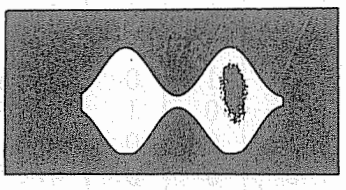

Figure 2

TRUTH CHART

CHANNEL	1 = 7.00 Volts 0 = 0 Volts IC3 PROGRAM DIVIDER PINS								REC SYNTHESIZER OUTPUT IN MHz AT TP3	XMT SYNTHESIZER OUTPUT IN MHz AT TP3
	17	16	15	14	13	12	11	10		
1	1	1	1	1	1	1	1	1	16.270	16.725
2	1	1	1	0	0	0	0	1	16.280	16.735
3	1	1	1	0	1	0	0	1	16.290	16.745
4	1	1	1	1	1	0	1	0	16.310	16.765
5	1	1	1	0	1	0	0	0	16.320	16.775
6	1	1	1	0	0	0	1	0	16.330	16.785
7	1	1	1	1	1	1	0	1	16.340	16.795
8	1	1	1	0	0	0	0	0	16.360	16.815
9	1	1	1	1	1	0	0	0	16.370	16.825
10	1	1	0	0	0	1	0	0	16.380	16.835
11	1	1	0	1	1	1	1	1	16.390	16.845
12	1	1	0	0	0	0	0	1	16.410	16.865
13	1	1	0	0	1	0	0	1	16.420	16.875
14	1	1	0	1	1	0	1	0	16.430	16.885
15	1	1	0	0	1	0	0	0	16.440	16.895
16	1	1	0	0	0	0	1	0	16.460	16.915
17	1	1	0	1	1	1	0	1	16.470	16.925
18	1	1	0	0	0	0	0	0	16.480	16.935
19	1	1	0	1	1	0	0	0	16.490	16.945
20	1	0	1	0	0	1	0	0	16.510	16.965
21	1	0	1	1	1	1	1	1	16.520	16.975
22	1	0	1	0	0	0	0	1	16.530	16.985
23	1	0	1	0	1	0	0	1	16.560	17.105
24	1	0	1	1	1	0	1	0	16.540	16.995
25	1	0	1	0	1	0	0	0	16.550	17.005
26	1	0	1	0	0	0	1	0	16.570	17.025
27	1	0	1	1	1	1	0	1	16.580	17.035
28	1	0	1	0	0	0	0	0	16.590	17.045
29	1	0	1	1	1	0	0	0	16.600	17.055
30	1	0	0	0	0	1	0	0	16.610	17.065
31	1	0	0	1	1	1	1	1	16.620	17.075
32	1	0	0	0	0	0	0	1	16.630	17.085
33	1	0	0	0	1	0	0	1	16.640	17.095
34	1	0	0	1	1	0	1	0	16.650	17.105
35	1	0	0	0	1	0	0	0	16.660	17.115
36	1	0	0	0	0	0	1	0	16.670	17.125
37	1	0	0	1	1	1	0	1	16.680	17.135
38	1	0	0	0	0	0	0	0	16.690	17.145
39	1	0	0	1	1	0	0	0	16.700	17.155
40	0	1	0	0	0	1	0	0	16.710	17.165

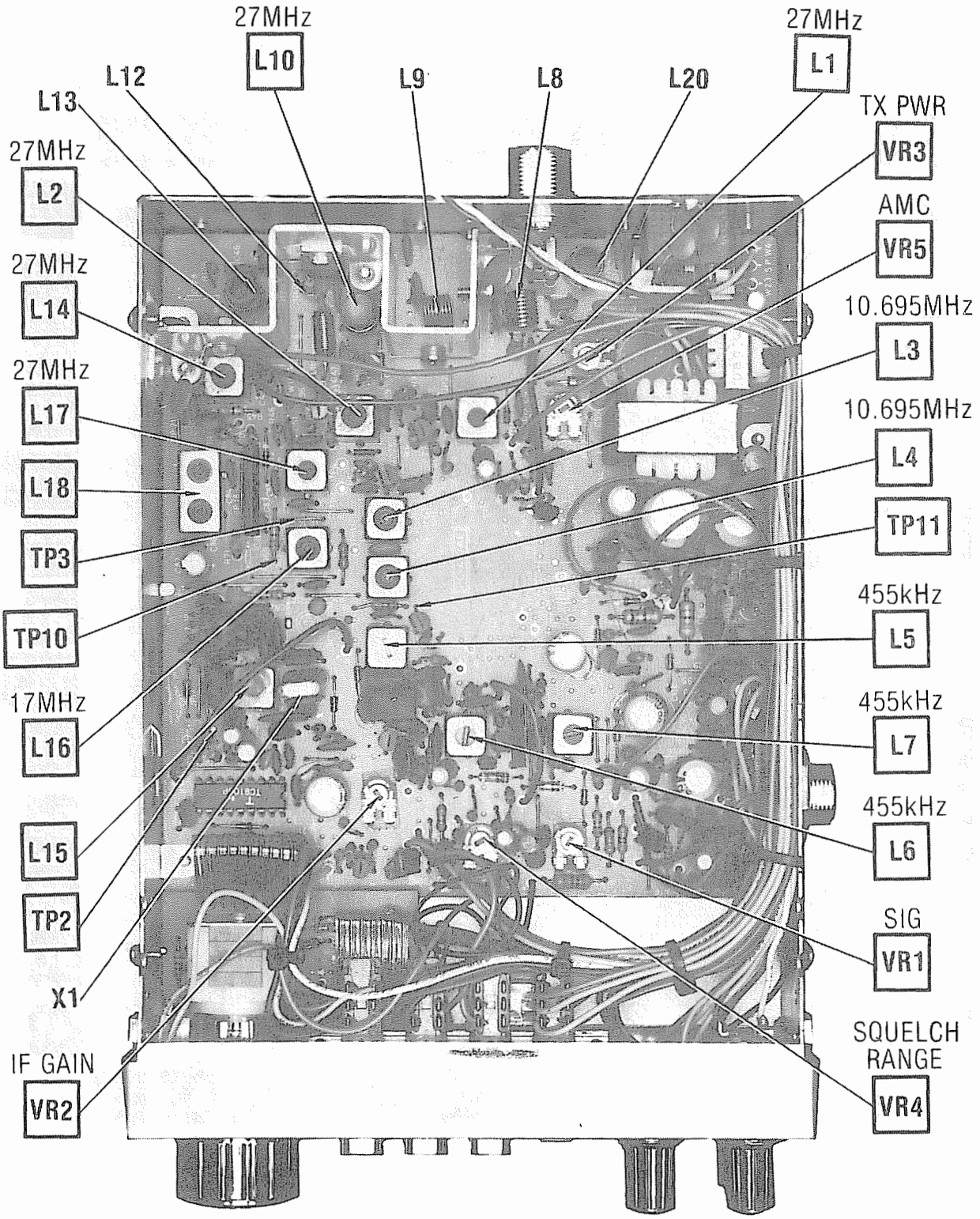

CHASSIS-BOTTOM

A Howard W. Sams CIRCUITRACE® Photo

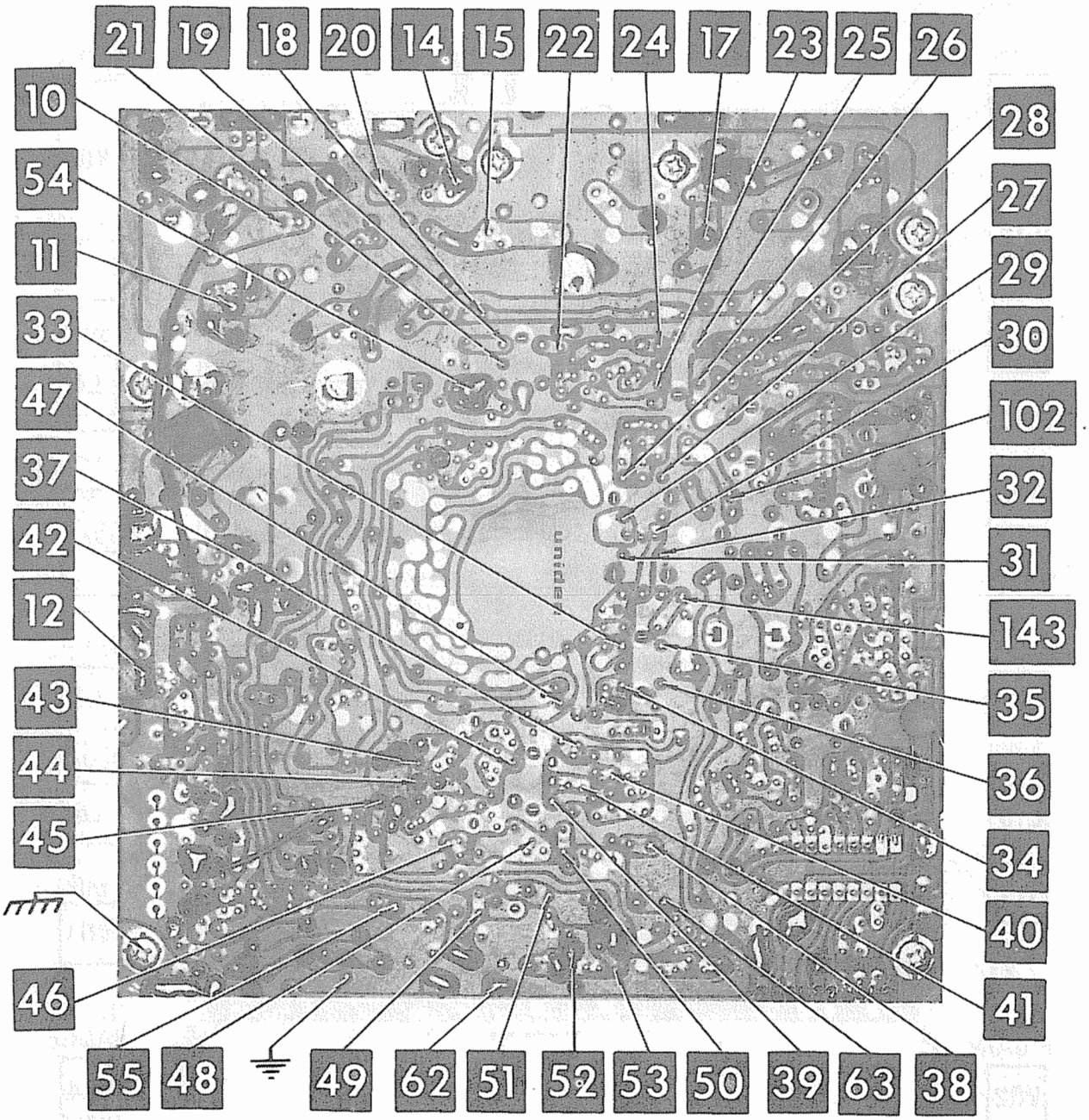

MAIN BOARD

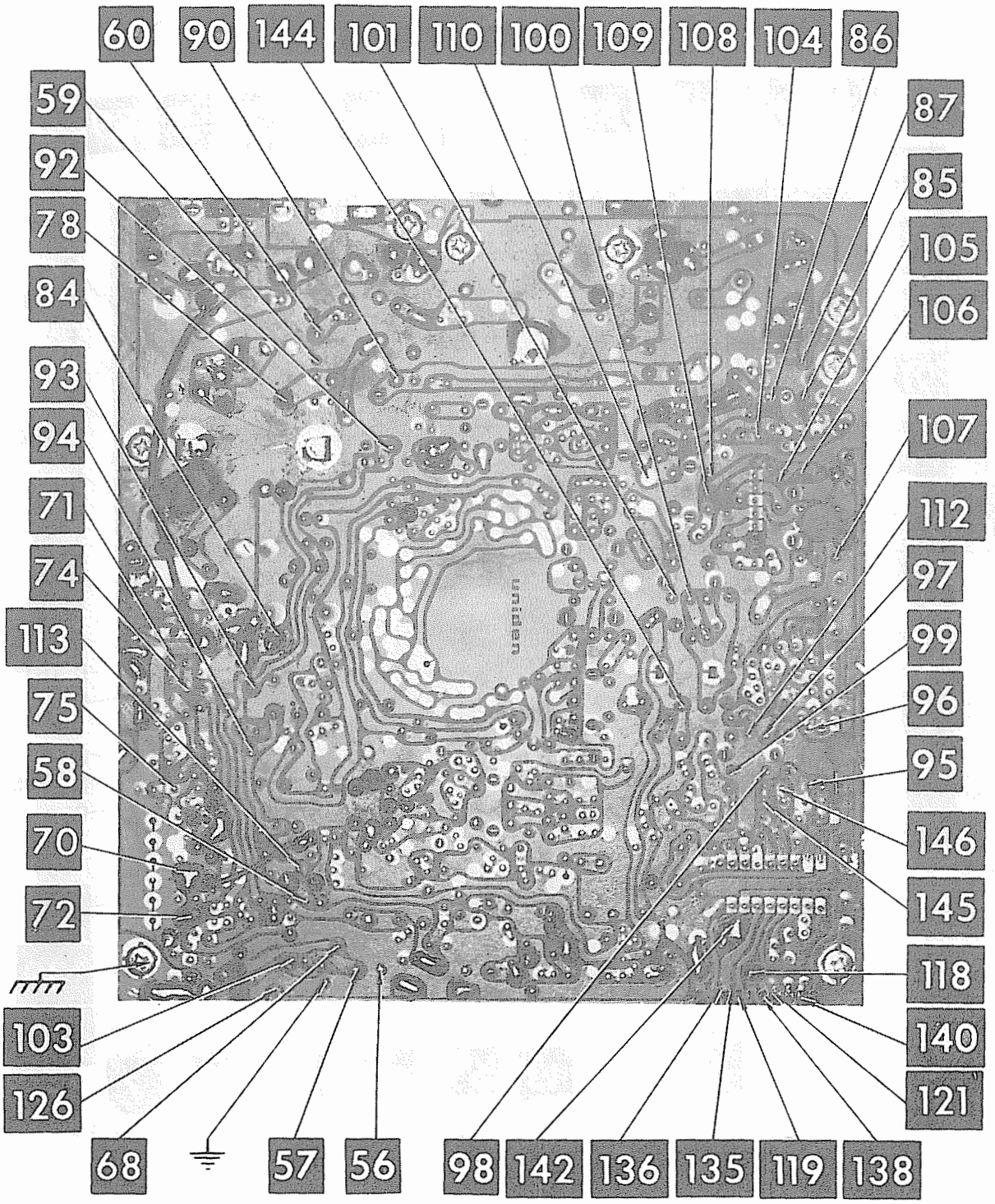
60
90
144
101
110
100
109
108
104
86
59
92
78
84
93
94
71
74
113
75
58
70
72
103
126
68
57
56
98
142
136
135
119
138
87
85
105
106
107
112
97
99
96
95
146
145
118
140
121

MAIN BOARD

A Howard W. Sams CIRCUITRACE® Photo

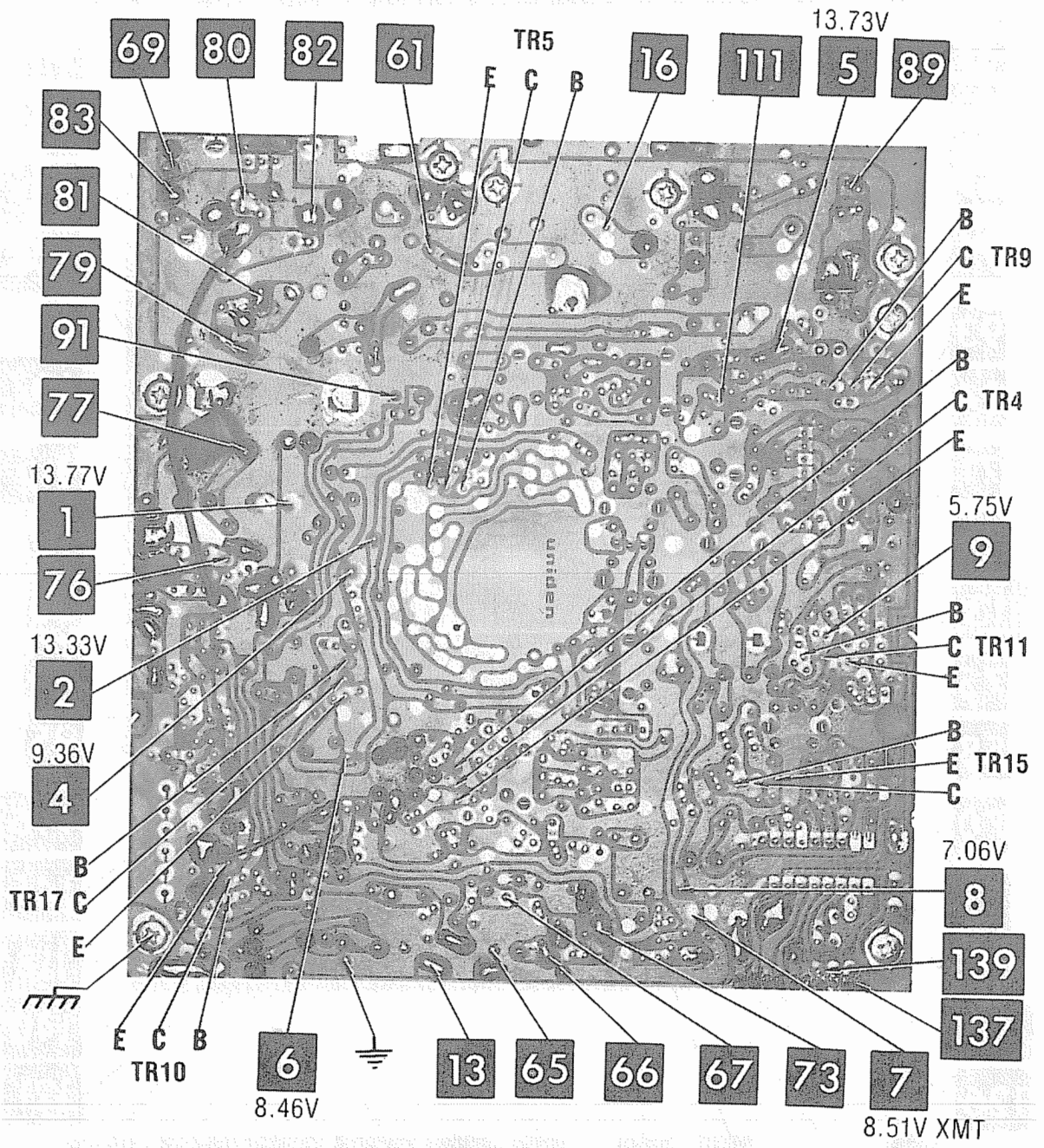

MAIN BOARD

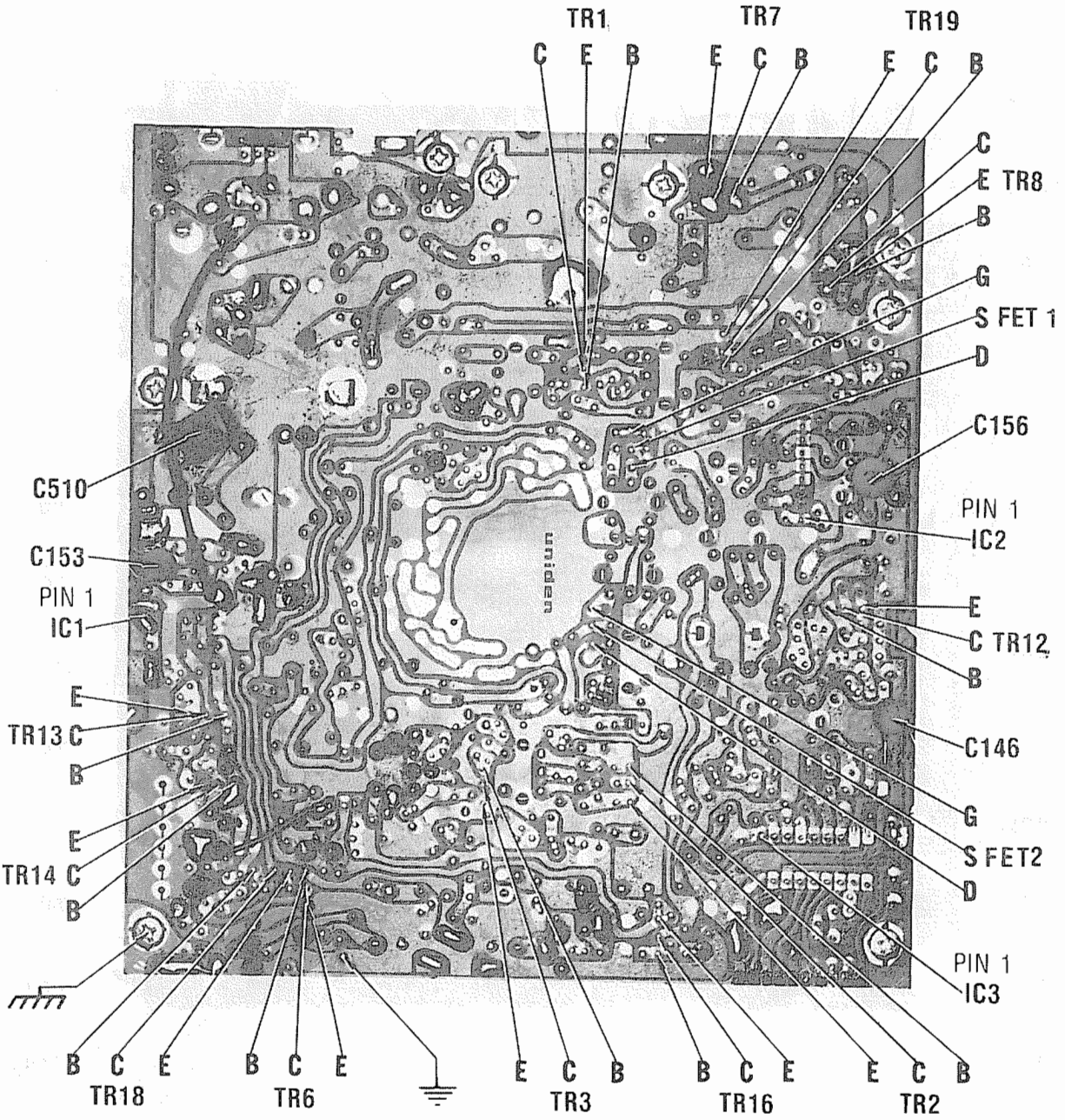
TR1
C E B
TR7
E C B
TR19
E C B
C
E TR8
B
G
S FET 1
D
C156
PIN 1
IC2
E
C TR12
B
C146
G
S FET2
D
PIN 1
IC3
C510
C153
PIN 1
IC1
E
TR13 C
B
E
TR14 C
B
B C E
TR18
B C E
TR6
E C B
TR3
B C E
TR16
E C B
TR2
uniden

MAIN BOARD

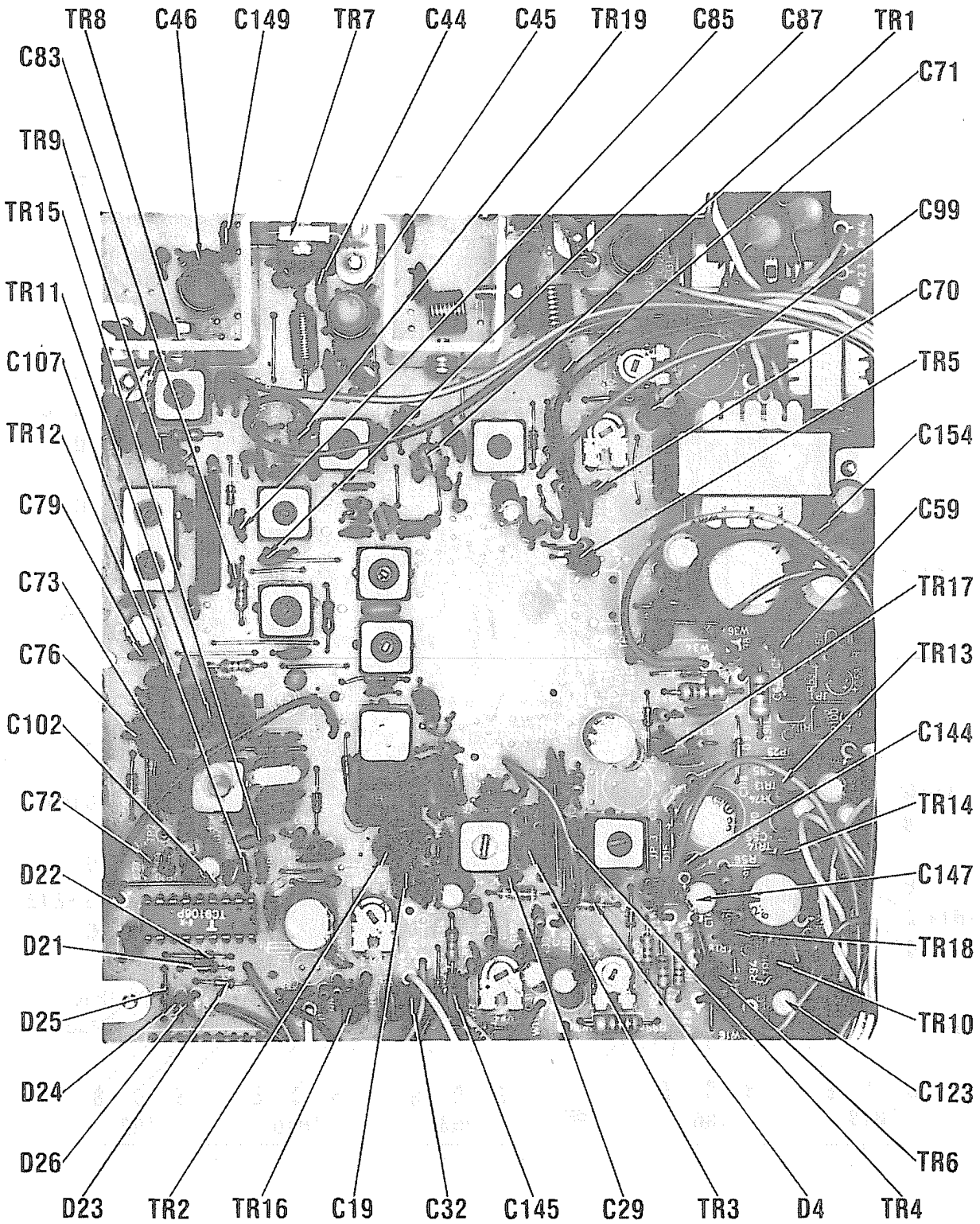
TR8
C46
C149
TR7
C44
C45
TR19
C85
C87
TR1
C83
C71
TR9
TR15
C99
TR11
C70
C107
TR5
TR12
C154
C79
C59
C73
TR17
C76
TR13
C102
C144
C72
TR14
D22
C147
D21
TR18
D25
TR10
D24
C123
D26
TR6
D23
TR2
TR16
C19
C32
C145
C29
TR3
D4
TR4

MAIN BOARD

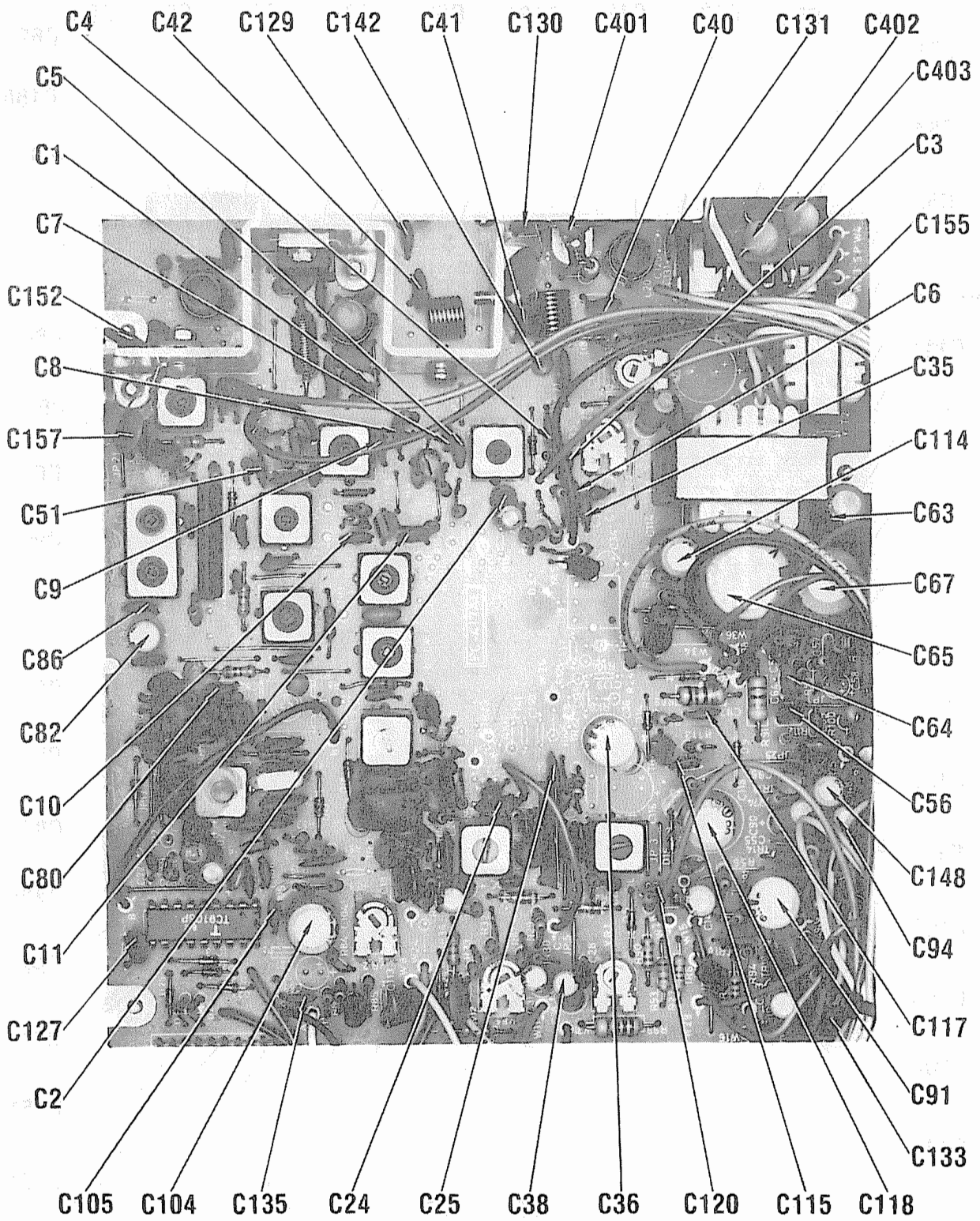
C4
C42
C129
C142
C41
C130
C401
C40
C131
C402
C403
C5
C3
C1
C155
C7
C6
C152
C35
C8
C114
C157
C63
C51
C67
C9
C65
C86
C64
C82
C56
C10
C148
C80
C94
C11
C117
C127
C91
C2
C133
C105
C104
C135
C24
C25
C38
C36
C120
C115
C118

MAIN BOARD

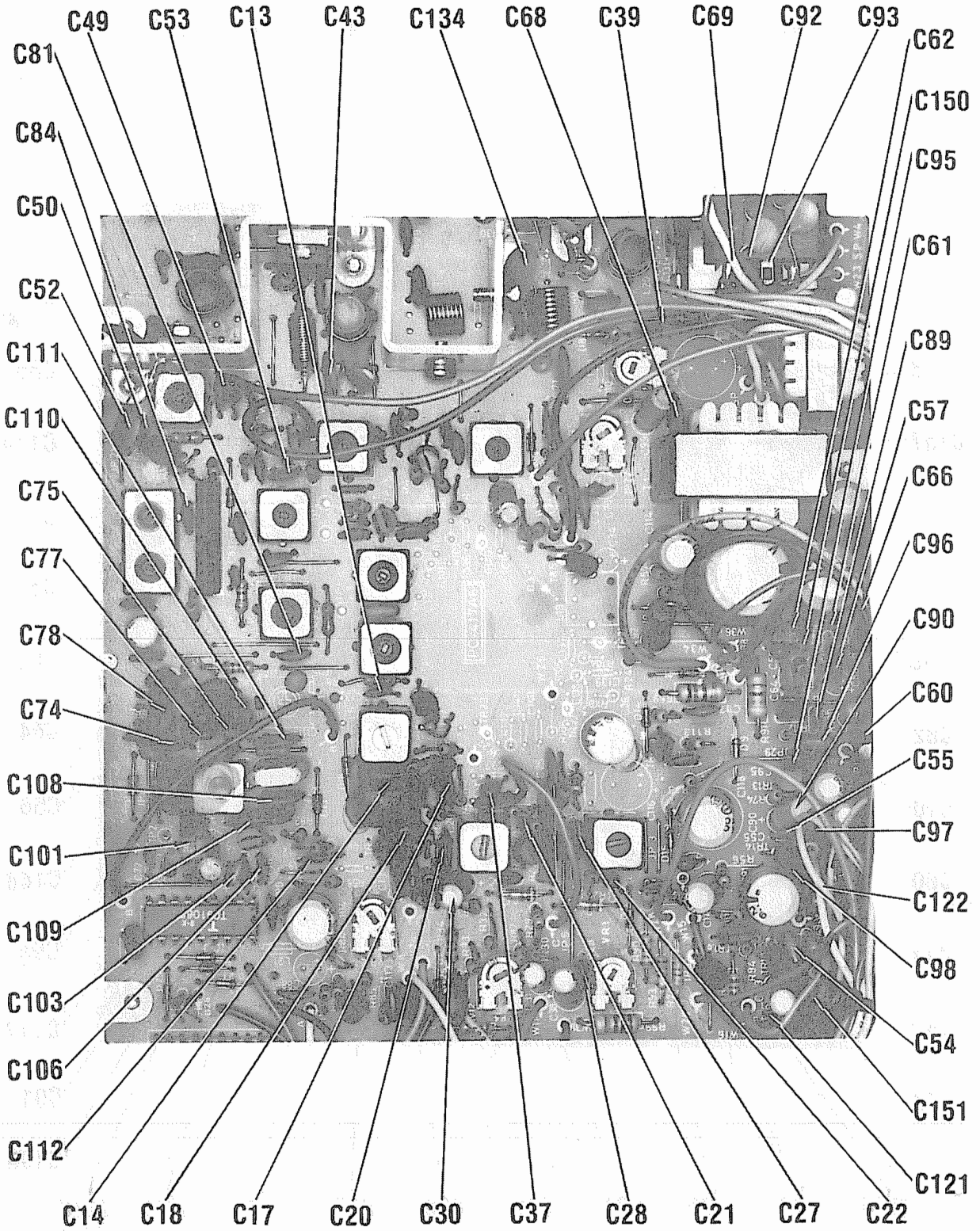
C49
C53
C13
C43
C134
C68
C39
C69
C92
C93
C62
C150
C95
C61
C89
C57
C66
C96
C90
C60
C55
C97
C122
C98
C54
C151
C121
C22
C27
C21
C28
C37
C30
C20
C17
C18
C14
C112
C106
C103
C109
C101
C108
C74
C78
C77
C75
C110
C111
C52
C50
C84
C81

MAIN BOARD

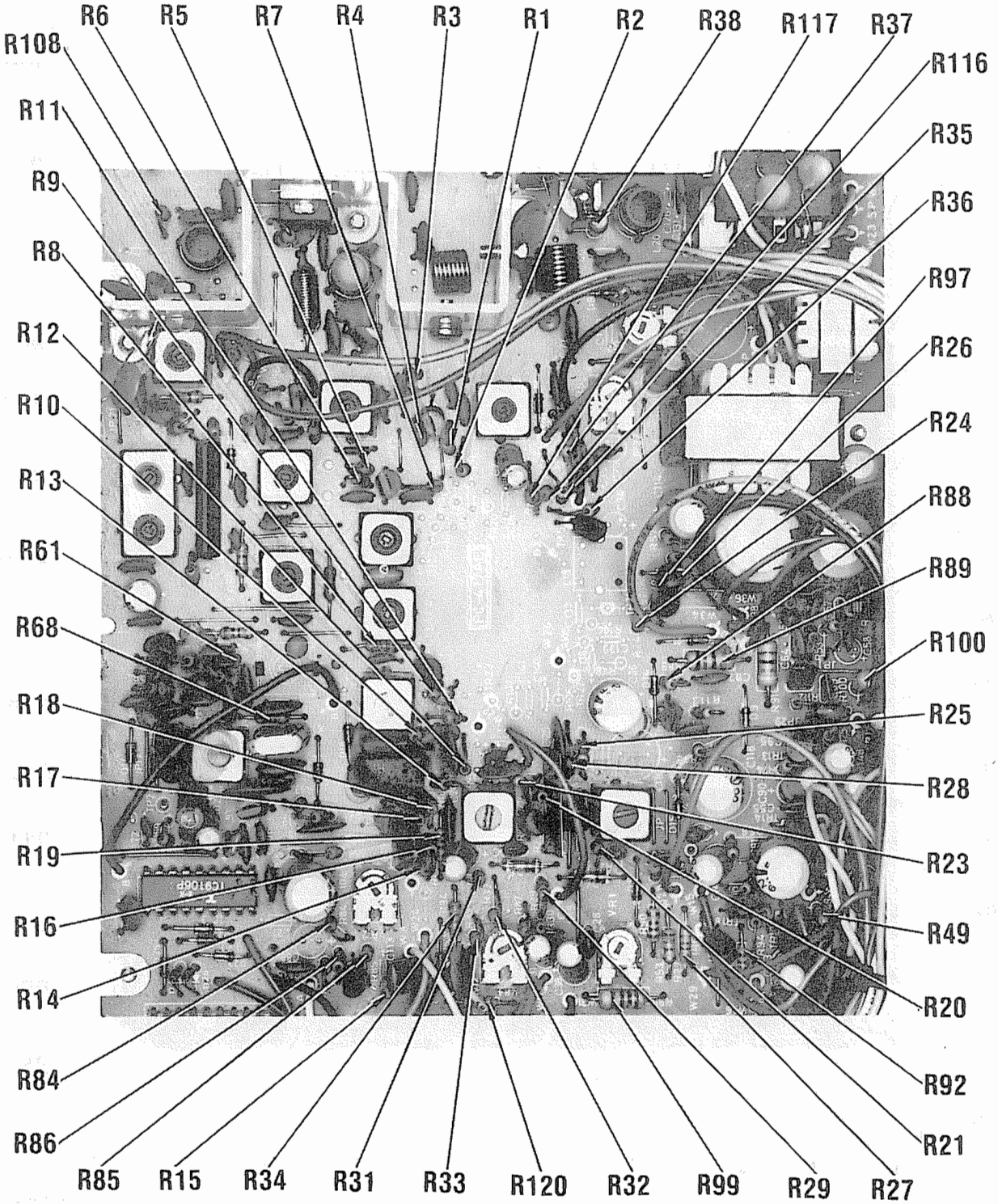
R6
R5
R7
R4
R3
R1
R2
R38
R117
R37
R108
R116
R11
R35
R9
R36
R8
R97
R12
R26
R10
R24
R13
R88
R61
R89
R68
R100
R18
R25
R17
R28
R19
R23
R16
R49
R14
R20
R84
R92
R86
R21
R85
R15
R34
R31
R33
R120
R32
R99
R29
R27

MAIN BOARD

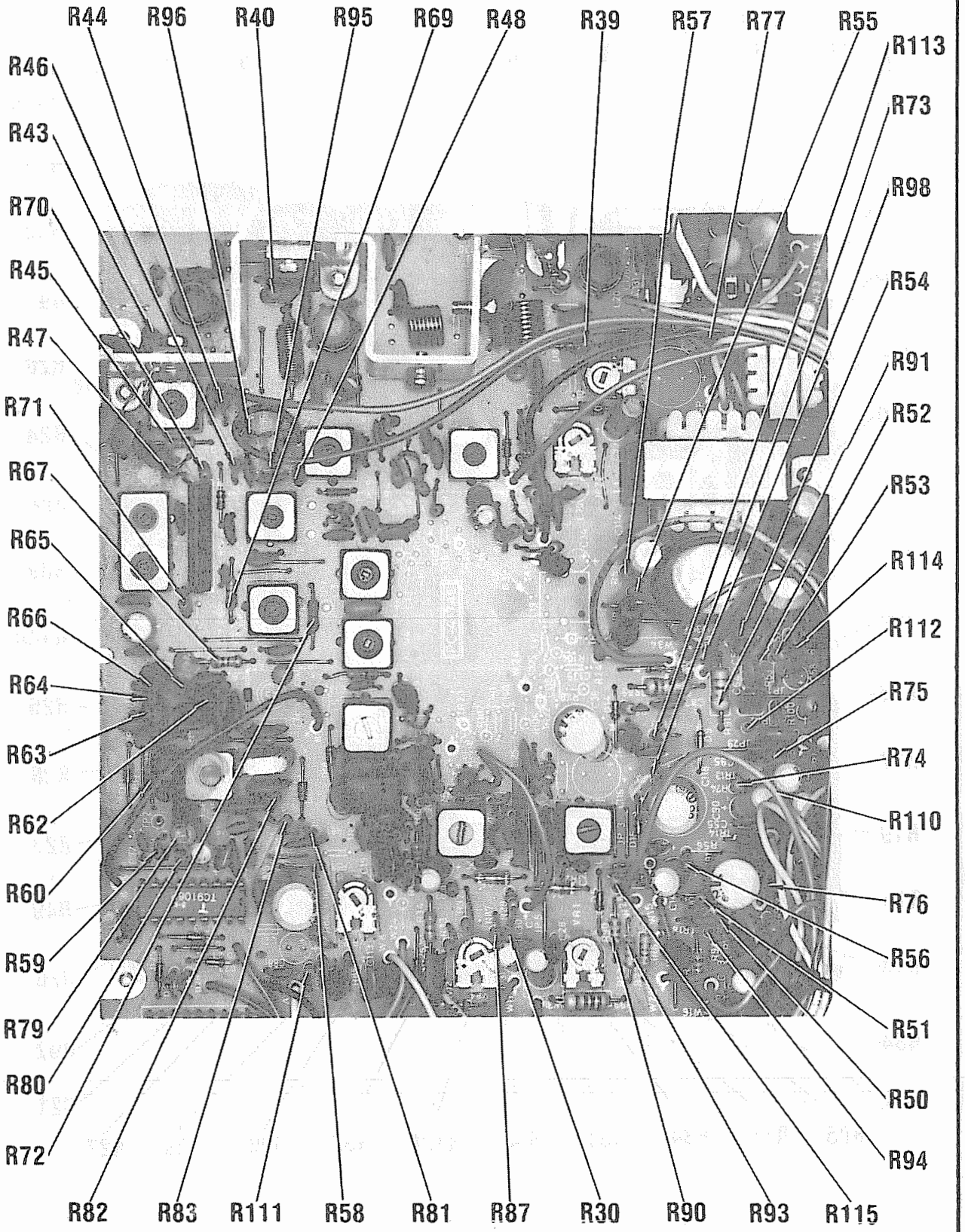
R44
R96
R40
R95
R69
R48
R39
R57
R77
R55
R113
R73
R98
R54
R91
R52
R53
R114
R112
R75
R74
R110
R76
R56
R51
R50
R94
R115
R90
R93
R87
R30
R81
R58
R111
R83
R82
R72
R80
R79
R59
R60
R62
R63
R64
R66
R65
R67
R71
R47
R45
R70
R43
R46

MAIN BOARD

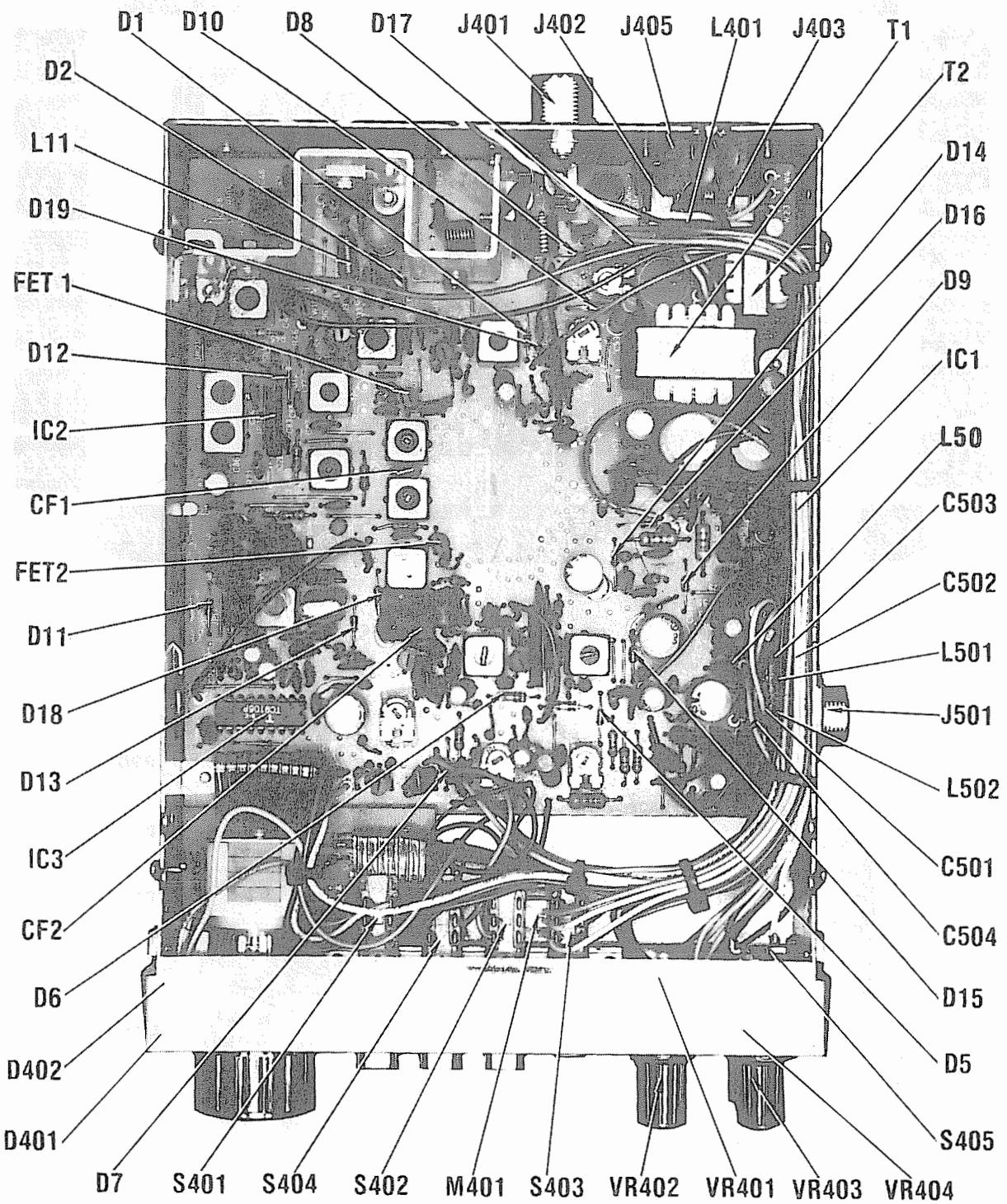

CHASSIS-BOTTOM

A Howard W. Sams CIRCUITRACE Photo

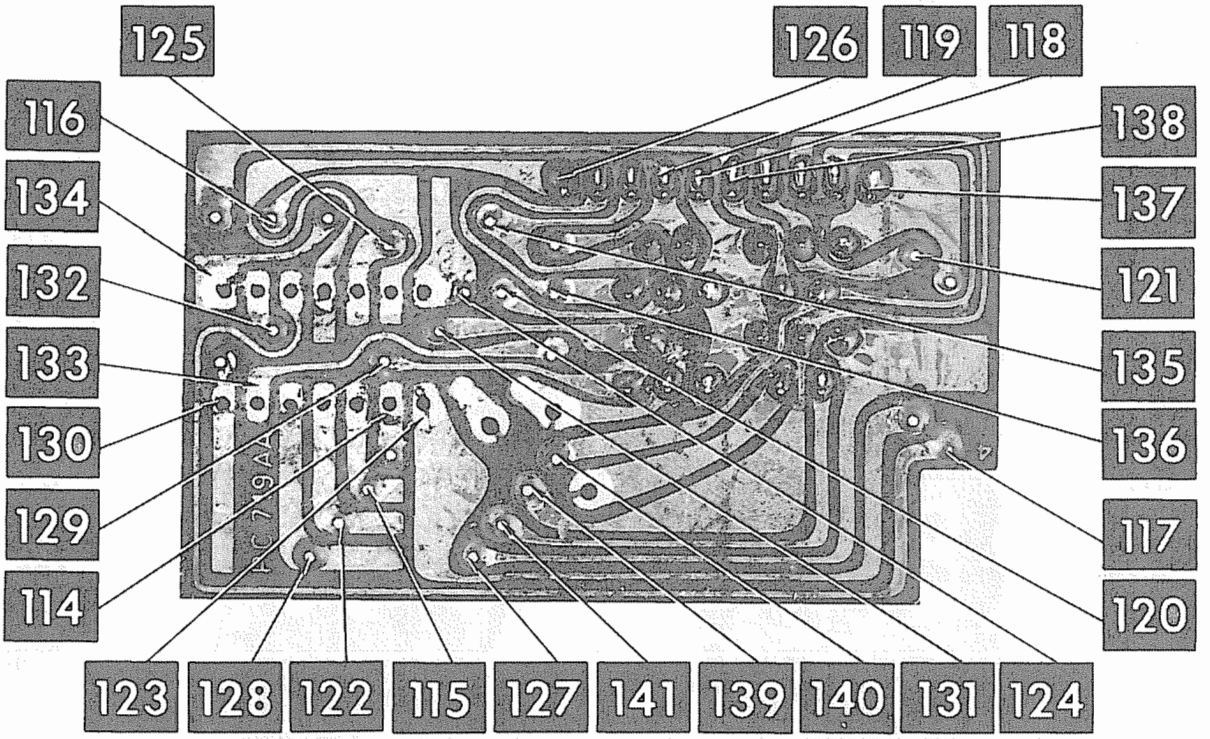

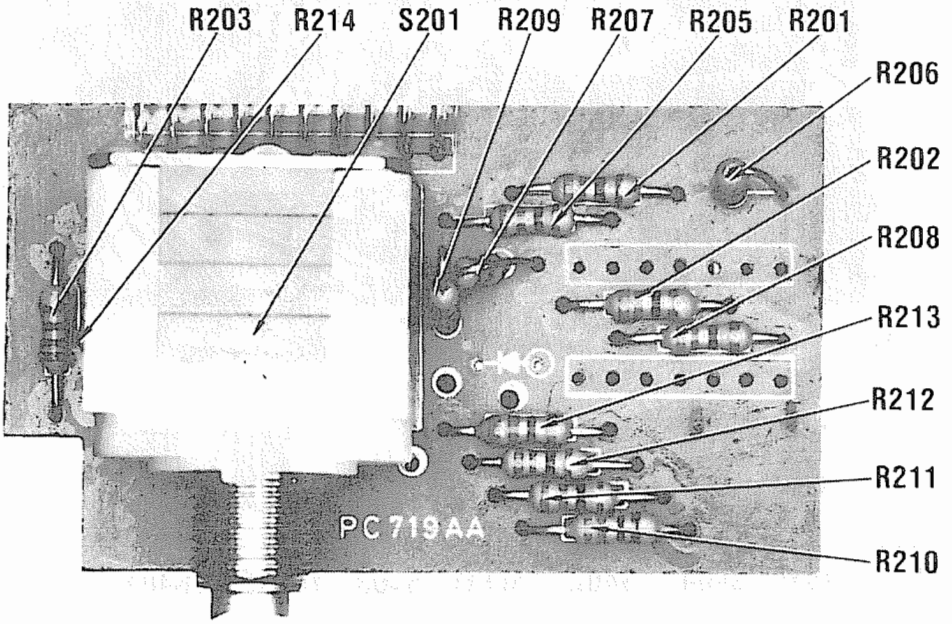

CHANNEL SELECTOR BOARD

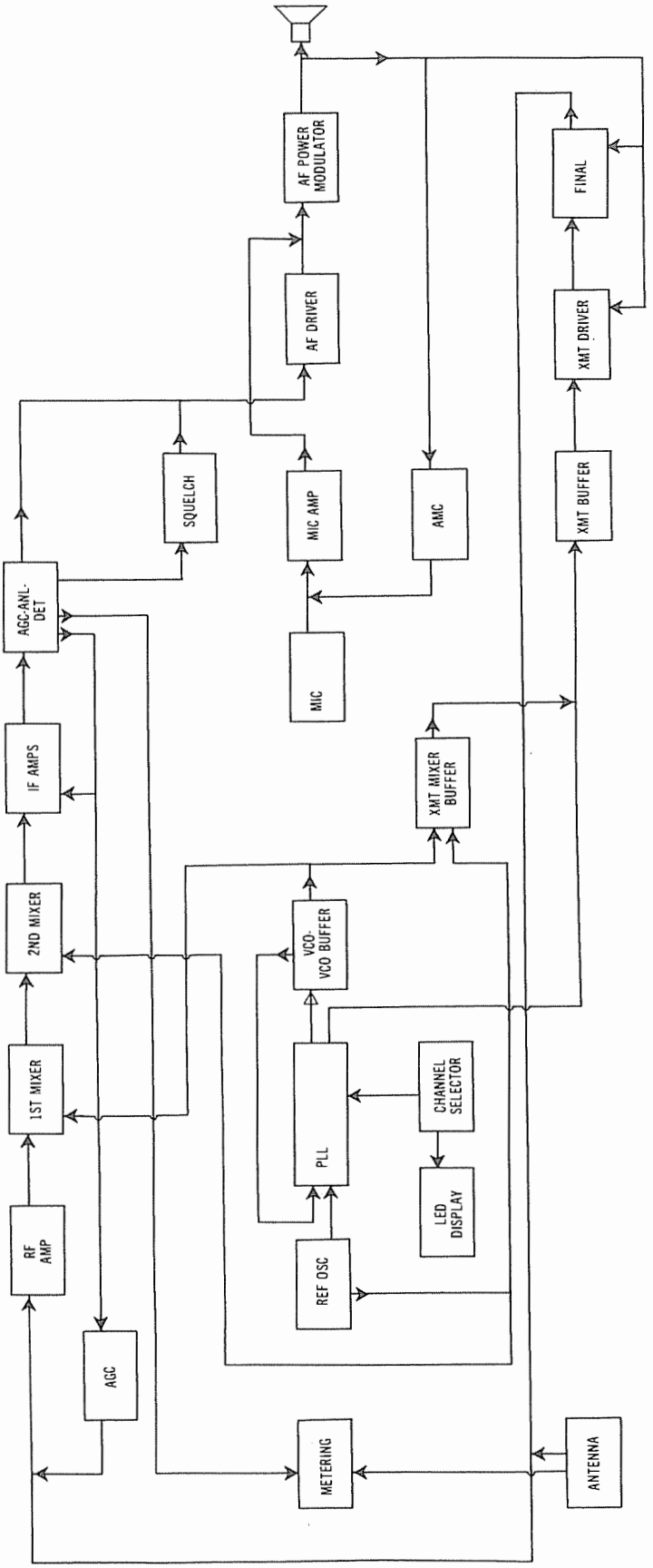

BLOCK DIAGRAM

A Howard W. Sams CIRCUITRACE® Photo

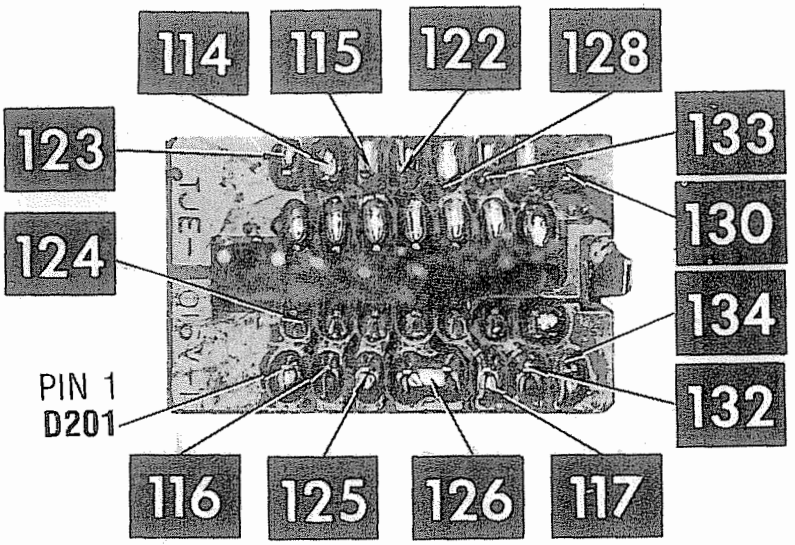

CHANNEL INDICATOR BOARD

PARTS LIST AND DESCRIPTION

(When ordering parts, state Model, Part Number, and Description.)

SEMICONDUCTORS (Select replacement transistor for best results)

ITEM No.	TYPE No.	MFGR. PART No.	REPLACEMENT DATA							
			GENERAL ELECTRIC PART No.	MALLORY PART No.	RAYTHEON PART No.	RCA PART No.	SYLVANIA PART No.	THORDARSON PART No.	WORKMAN PART No.	ZENITH PART No.
D1	1S2075K	2000-303	GE-300	PTC214	REN 177	SK3175/177	ECG177	TM177	WEP1062/177	103-131
D2	1S2075K	2000-303	GE-300	PTC214	REN 177	SK3175/177	ECG177	TM177	WEP1062/177	103-131
D4	1N60AM	2000-301	1N60	PTC206	REN 109	SK3088	ECG109	TM109/**	WEP134/109	103-Z9001
D5	1S2075K	2000-303	GE-300	PTC214	REN 177	SK3175/177	ECG177	TM177	WEP1062/177	103-131
D6	1N60AM	2000-301	1N60	PTC206	REN 109	SK3088	ECG109	TM109/**	WEP134/109	103-Z9001
D7	1S2075K	2000-303	GE-300	PTC214	REN 177	SK3175/177	ECG177	TM177	WEP1062/177	103-131
D8	1S2075K	2000-303	GE-300	PTC214	REN 177	SK3175/177	ECG177	TM177	WEP1062/177	103-131
D9	1S2075K	2000-303	GE-300	PTC214	REN 177	SK3175/177	ECG177	TM177	WEP1062/177	103-131
D10	1N4003	2000-320	GE-504A	1N4003	REN 116	SK3312	ECG116	TM116	WEP156	212-76-02
D11	1S2688EA	2000-344			REN 612	SK3325/612	ECG612	TM612		103-176
D12	1S2075K	2000-303	GE-300	PTC214	REN 177	SK3175/177	ECG177	TM177	WEP1062/177	103-131
D13	R07.5EB2	2000-311		ZM7.58		SK3781/5015A	ECG5015A	TM5015	WEP1416/5015	103-Z9002
D14	1S2075K	2000-303	GE-300	PTC214	REN 177	SK3175/177	ECG177	TM177	WEP1062/177	103-131
D15	RD10EB1	2000-370		ZM10B		SK3785/5019A	ECG5019A	TM5019	WEP1420/5019	103-Z9010
D16	1S2075K	2000-303	GE-300	PTC214	REN 177	SK3175/177	ECG177	TM177	WEP1062/177	103-131
D17	1N4003	2000-320	GE-504A	1N4003	REN 116	SK3312	ECG116	TM116	WEP156	212-76-02
D18	1S2075K	2000-303	GE-300	PTC214	REN 177	SK3175/177	ECG177	TM177	WEP1062/177	103-131
D19	1S2075K	2000-303	GE-300	PTC214	REN 177	SK3175/177	ECG177	TM177	WEP1062/177	103-131
D21	1S2075K	2000-303	GE-300	PTC214	REN 177	SK3175/177	ECG177	TM177	WEP1062/177	103-131
D22	1S2075K	2000-303	GE-300	PTC214	REN 177	SK3175/177	ECG177	TM177	WEP1062/177	103-131
D23	1S2075K	2000-303	GE-300	PTC214	REN 177	SK3175/177	ECG177	TM177	WEP1062/177	103-131
D24	1S2075K	2000-303	GE-300	PTC214	REN 177	SK3175/177	ECG177	TM177	WEP1062/177	103-131
D25	1S2075K	2000-303	GE-300	PTC214	REN 177	SK3175/177	ECG177	TM177	WEP1062/177	103-131
D26	1S2075K	2000-303	GE-300	PTC214	REN 177	SK3175/177	ECG177	TM177	WEP1062/177	103-131
IC1	TA7222P	2000-032				SK3726				
IC2	TA7310P	2000-017			REN 1192	SK3445/1192	ECG1192	TM1192	WEP2120/1192	221-Z9061
IC3	TC9106P	2000-035				SK3830				
FET1	2SK104H	2000-107	GE-FET-2	PTC161	REN 132*	SK3834/132	ECG312*	TM312*	WEP920/312*	921-1067*
FET2	2SK104H	2000-107	GE-FET-2	PTC161	REN 132*	SK3834/132	ECG312*	TM312*	WEP920/312*	921-1067*
TR1	2SC1674L	2000-240	GE-61*	PTC132*	REN 229*	SK3132	ECG229*	TM229*	WEP784	121-Z9021*
TR2	2SC1675L	2000-213	GE-213	PTC132*	REN 229*	SK3124/289	ECG229*	TM229*	WEP773	121-Z9021*
TR3	2SC1675L	2000-213	GE-213	PTC132*	REN 229*	SK3124/289	ECG229*	TM229*	WEP773	121-Z9021*
TR4	2SC1675L	2000-213	GE-213	PTC132*	REN 229*	SK3124/289	ECG229*	TM229*	WEP773	121-Z9021*
TR5	2SC945Q		GE-212	PTC121*	REN 199	SK3124/289	ECG199	TM199/**	WEP1945	121-972*
	2SC945AQ	2000-258	GE-212	PTC121*	REN 199	SK3124/289	ECG199	TM199/**	WEP1945	121-972*
TR6	2SC945Q		GE-212	PTC121*	REN 199	SK3124/289	ECG199	TM199/**	WEP1945	121-972*
	2SC945AQ	2000-258	GE-212	PTC121*	REN 199	SK3124/289	ECG199	TM199/**	WEP1945	121-972*
TR7	2SC2075	2000-249	GE-215	PTC186	REN 235	SK3197/235	ECG235	TM235	WEP785/235	121-Z9039
TR8	2SC2091	2000-207	GE-270	PTC180	REN 295	SK3253/295	ECG295	TM295	WEP913/295	121-880
TR9	2SC710D	2000-268	GE-211*	PTC132*	REN 123AP*	SK3356	ECG107*	TM107*/**	WEP710	121-Z9000A*
TR10	2SC945Q		GE-212	PTC121*	REN 199	SK3124/289	ECG199	TM199/**	WEP1945	121-972*
	2SC945AQ	2000-258	GE-212	PTC121*	REN 199	SK3124/289	ECG199	TM199/**	WEP1945	121-972*
TR11	2SC1675L	2000-213	GE-213	PTC132*	REN 229*	SK3124/289	ECG229*	TM229*	WEP773	121-Z9021*
TR12	2SC1675L	2000-213	GE-213	PTC132*	REN 229*	SK3124/289	ECG229*	TM229*	WEP773	121-Z9021*
TR13	2SC945Q		GE-212	PTC121*	REN 199	SK3124/289	ECG199	TM199/**	WEP1945	121-972*
	2SC945AQ	2000-258	GE-212	PTC121*	REN 199	SK3124/289	ECG199	TM199/**	WEP1945	121-972*
TR14	2SA733P	2000-218	GE-48	PTC127	REN 294	SK3114/290	ECG290	TM290/**	WEP911/290	121-Z9067
TR15	2SC945Q		GE-212	PTC121*	REN 199	SK3124/289	ECG199	TM199/**	WEP1945	121-972*
	2SC945AQ	2000-258	GE-212	PTC121*	REN 199	SK3124/289	ECG199	TM199/**	WEP1945	121-972*

PARTS LIST AND DESCRIPTION (CONTINUED)

(When ordering parts, state Model, Part Number, and Description.)

SEMICONDUCTORS (Select replacement transistor for best results) (cont)

ITEM No.	TYPE No.	MFGR. PART No.	REPLACEMENT DATA							
			GENERAL ELECTRIC PART No.	MALLORY PART No.	RAYTHEON PART No.	RCA PART No.	SYLVANIA PART No.	THORDARSON PART No.	WORKMAN PART No.	ZENITH PART No.
TR16	2SA733P	2000-218	GE-48	PTC127	REN 294	SK3114/290	ECG290	TM290/**	WEP911/290	121-Z9067
TR17	2SC2236Y	2000-248	GE-270	PTC143	REN 293	SK3849/293	ECG293	TM293	WEP912/293	121-Z9066
TR18	2SC2236-O	2000-247	GE-270	PTC143	REN 293	SK3849/293	ECG293	TM293	WEP912/293	121-Z9066
TR19	2SC945Q		GE-212	PTC121*	REN 199	SK3124/289	ECG199	TM199/**	WEP1945	121-972*
	2SC945AQ	2000-258	GE-212	PTC121*	REN 199	SK3124/289	ECG199	TM199/**	WEP1945	121-972*

* Lead configuration may vary from original.
/** Also available as exact type replacement.

ELECTROLYTIC CAPACITORS

ITEM No.	RATING	REPLACEMENT DATA				
		MFGR. PART No.	CORNELL-DUBILIER PART No.	MALLORY PART No.	SPRAGUE PART No.	
					Q-LINE	GENERAL LINE
C2	4.7 25V	1800-304	PC5-50	VTT4R7B50	QV1-31	EV-1619.1
C22	10 6.3V	1800-602	PC10-25	VTT10B25	QV1-41	EV-1222
C30	1 50V	1800-302	PC1-50	VTT1A50	QV1-11	EV-1615
C31	4.7 25V	1800-304	PC5-50	VTT4R7B50	QV1-31	EV-1619.1
C34	4.7 25V	1800-304	PC5-50	VTT4R7B50	QV1-31	EV-1619.1
C36	100 16V	1800-312	PC100-16	VTT100E16	QV1-95	EV-1231
C37	4.7 25V	1800-304	PC5-50	VTT4R7B50	QV1-31	EV-1619.1
C38	2.2 25V	1800-303	PC25-25	VTT22B16	QV1-55	EV-1224
C58	10 16V	1800-306	PC10-25	VTT10B25	QV1-41	EV-1222
C59	4.7 16V	1800-616	PC5-50	VTT4R7B50	QV1-31	EV-1619.1
C63	47 16V	1800-316	PC50-16	VTT47D16	QV1-73	EV-1226
C65	1000 16V	1800-328	PC1000-16	VTT1000M16	QV1-183	EV-1261
C67	470 16V	1800-309	PC500-16	VTT470K16	QV1-151	EV-1251
C70	1 50V	1800-302	PC1-50	VTT1A50	QV1-11	EV-1615
C82	47 10V	1800-324	PC50-16	VTT47D16	QV1-73	EV-1226
C88	47 10V	1800-324	PC50-16	VTT47D16	QV1-73	EV-1226
C90	1 50V	1800-302	PC1-50	VTT1A50	QV1-11	EV-1615
C91	220 10V	1800-325	PC200-10	VTT220F10	QE1-479*	TVA-1160.6*
C94	10 16V	1800-306	PC10-25	VTT10B25	QV1-41	EV-1222
C99	4.7 25V	1800-304	PC5-50	VTT4R7B50	QV1-31	EV-1619.1
C101	2.2 25V	1800-303	PC2-100	VTT2R2A50	QV1-21	EV-1617.1
C102	2.2 25V	1800-303	PC2-100	VTT2R2A50	QV1-21	EV-1617.1
C103	.22 16V	1800-502		TDC224M050EL	QDT1-10	S050-R229
C104	470 10V	1800-327	PC500-16	VTT470K16	QV1-151	EV-1251
C114	100 10V	1800-310	PC100-10	VTT100010	QV1-93	EV-1131
C116	220 10V	1800-325	PC250-10	VTT220F10	QV1-115	EV-1140
C118	470 10V	1800-327	PC500-16	VTT470K16	QV1-151	EV-1251
C119	220 16V	1800-308	PC250-25	VTT220H16	QV1-117	EV-1240
C123	10 16V	1800-306	PC10-25	VTT10B25	QV1-41	EV-1222
C143	220 16V	1800-308	PC250-25	VTT220H16	QV1-117	EV-1240
C144	3.3 16V	1800-604	NLW4-50	VTT3R3A50	QV1-25	EV-1618.1
C147	47 10V	1800-324	PC50-16	VTT47D16	QV1-73	EV-1226
C148	47 10V	1800-324	PC50-16	VTT47D16	QV1-73	EV-1226
C155	10 16V	1800-306	PC10-25	VTT10B25	QV1-41	EV-1222
C165	47 10V	1800-324	PC50-16	VTT47D16	QV1-73	EV-1226
C167	47 10V	1800-324	PC50-16	VTT47D16	QV1-73	EV-1226

* Axial replacement for radial device.

CAPACITORS

ITEM No.	RATING	MFGR. PART No.	REPLACEMENT DATA			
			CORNELL-DUBILIER PART No.	MALLORY PART No.	SPRAGUE PART No.	
					Q-LINE	GENERAL LINE
C1	22 N220 50V	1800-007		*		10TCR-Q22
C3	.01 50V			MAG5011		
C4	.01 50V			MAG5011		
C5	220 50V			GP322		10TS-T22
C6	.01 50V		MGP01	TA110	QC2-141	TG-S10
C7	.01 50V		MGP01	TA110	QC2-141	TG-S10
C8	.01 50V		MGP01	TA110	QC2-141	TG-S10
C9	.01 50V		MGP01	TA110	QC2-141	TG-S10
C10	.01 50V		MGP01	TA110	QC2-141	TG-S10
C11	.01 50V		MGP01	TA110	QC2-141	TG-S10
C13	.001 25V		GP1000	GP210	QC2-81	5GA-D10
C14	.068 50V		WMF1S68	EWF1A168	QF1-195	1PB-S68
C17	.047 50V		MGP05	TA150	QC2-207	TG-S50
C18	1pF NPO 50V			CN0510		10TCC-V10
C19	.047 50V		OPMS2S47	EWF1A147	QF1-171	1PB-S47
C20	.047 50V		MGP05	TA150	QC2-207	TG-S50
C21	.001 50V		DPMS601	EWF1A210	QF1-1	1PB-D10
C24	.047 50V		MGP05	TA150	QC2-207	TG-S50
C25	.047 50V		MGP05	TA150	QC2-207	TG-S50
C27	.0047 50V		WMF1D47	EWF1A247	QF1-57	1PB-047
C28	.01 50V		WMF1S1	EWF1A110	QF1-91	1PB-S10
C29	.0022 50V		OPMS6D22	EWF6222		6PS-Q22
C32	.022 50V		DPMS2S22	EWF1A122	QF1-127	1PB-S22
C35	.01 50V			MAG5011		
C36	100 50V		NPO100	CN0310		10TCC-T10
C39	.047 50V		MGP05	TA150	QC2-207	TG-S50
C40	82 50V		NPO82	CN0482		10TCC-Q82
C41	330 50V		GP330	GP333	QCT2-33	10TS-T33
C42	330 50V		GP330	GP333	QCT2-33	10TS-T33
C43	.039 50V			GP140		5GA-S40
C44	.0047 50V		GP4700	GP247		5GA-D47
C45	56 50V			GP456		10TS-Q56

CAPACITORS (cont)

ITEM No.	RATING	MFGR. PART No.	REPLACEMENT DATA			
			CORNELL-DUBILIER PART No.	MALLORY PART No.	SPRAGUE PART No.	
					Q-LINE	GENERAL LINE
C46	250 50V		GP270	GP327		10TS-T27
C49	.01 50V		MGP01	TA110	QC2-141	TG-S10
C50	.0047 50V		GP4700	GP247		5GA-047
C51	.01 50V		MGP01	TA110	QC2-141	TG-S10
C52	.01 50V		MGP01	TA110	QC2-141	TG-S10
C53	.01 50V		MGP01	TA110	QC2-141	TG-S10
C54	.022 50V		OPMS2S22	EWF1A122	QF1-127	1PB-S22
C55	.001 25V		GP1000	GP210	QC2-81	5GA-010
C56	.0068 50V		WMF1068	EWF1A268	QF1-73	1PB-068
C57	.001 50V		OPMS601	EWF1A210	QF1-1	1PB-010
C60	.01 50V		MGP01	TA110	QC2-141	TG-S10
C61	.001 25V		GP1000	GP210	QC2-81	5GA-010
C62	.001 50V		OPMS601	EWF1A210	QF1-1	1PB-010
C64	.01 50V		MGP01	TA110	QC2-141	TG-S10
C66	.1 25V			MAG2501	QC1-231	HY-750
C68	.04 50V			GP140		5GA-S40
C69	.001 25V		GP1000	GP210	QC2-81	5GA-010
C71	.04 50V			GP140		5GA-S40
C72	33 50V		NP033	CN0433	QCC2-22	10TCC-Q33
C73	.1 50V		OPMS2P1	EWF1A010	QF1-215	1PB-P10
C74	68 50V		N68	CN7468		10TCU-Q68
C75	33 50V		NP033	CN0433	QCC2-22	10TCC-Q33
C76	100 50V		N100	CN7310		10TCU-T10
C77	220 50V		N220	CN7322		10TCU-T22
C78	10 50V		NP010	CN0410	QCC2-15	10TCC-Q10
C79	.01 50V		MGP01	TA110	QC2-141	TG-S10
C80	.01 50V		MGP01	TA110	QC2-141	TG-S10
C81	.01 50V		MGP01	TA110	QC2-141	TG-S10
C83	5pF 50V		NP04P7	CN0547		10TCC-V47
C84	.01 50V		MGP01	TA110	QC2-141	TG-S10
C85	.01 50V		MGP01	TA110	QC2-141	TG-S10
C86	.01 50V		MGP01	TA110	QC2-141	TG-S10
C87	.01 50V		MGP01	TA110	QC2-141	TG-S10
C89	.001 50V			GP210	QCT2-41	10TS-D10
C92	.001 25V		GP1000	GP210	QC2-81	5GA-010
C93	.001 25V		GP1000	GP210	QC2-81	5GA-010
C95	.001 50V		OPMS601	EWF1A210	QF1-1	1PB-010
C96	.022 50V		OPMS2S22	EWF1A122	QF1-127	1PB-S22
C97	.0022 25V			GP222	QC2-97	5GA-022
C98	.01 50V		MGP01	TA110	QC2-141	TG-S10
C105	.01 50V		MGP01	TA110	QC2-141	TG-S10
C106	.01 50V		MGP01	TA110	QC2-141	TG-S10
C107	47 50V		NP047	CN0447	QCC2-26	10TCC-Q47
C108	120 N220 50V	1800-121		*		10TCR-T12
C109	220 N220 50V	1800-098		*		10TCR-T22
C110	470 50V		GP470	GP347	QCT2-35	10TS-T47
C111	56 NPO 50V			CN0456		10TCC-Q56
C112	.047 50V		MGP05	TA150	QC2-207	TG-S50
C115	.01 50V		MGP01	TA110	QC2-141	TG-S10
C117	.01 50V		MGP01	TA110	QC2-141	TG-S10
C120	.01 50V		MGP01	TA110	QC2-141	TG-S10
C121	.01 50V		MGP01	TA110	QC2-141	TG-S10
C122	.001 25V		GP1000	GP210	QC2-81	5GA-D10
C127	.01 50V		MGP01	TA110	QC2-141	TG-S10
C129	.01 50V			MAG5011		
C130	.01 50V			MAG5011		
C131	.01 50V			MAG5011		
C133	.01 50V			MAG5011		
C134	.047 50V		DPMS2S47	EWF1A147	QF1-171	1P8-S47
C135	.01 50V			MAG5011		
C142	2pF 50V		NP02P2	CN0522		10TCC-V22
C144	3.3 50V		NP03P3	CN0533		10TCC-V33
C145	.04 50V			GP140		5GA-S40
C146	.01 50V			MAG5011		
C149	33 50V		NP033	CN0433	QCC2-22	10TCC-Q33
C150	.001 50V			GP210	QCT2-41	10TS-010
C151	.0022 50V			GP222	QCT2-46	10TS-D22
C152	.01 50V			MAG5011		
C153	.01 50V			MAG5011		
C154	.047 50V		OPMS2S47	EWF1A147	QF1-171	1PB-S47
C156	.01 50V			MAG5011		
C157	470 50V		GP470	GP347	QCT2-35	10TS-T47
C401	33 50V		NP033	CN0433	QCC2-22	10TCC-Q33
C402	.01 50V			MAG5011		
C403	.01 50V			MAG50168		
C501	.001 50V			GP210	QCT2-41	10TS-010
C502	.01 50V			MAG5011		
C503	.001 50V			GP210	QCT2-41	10TS-010
C504	.01 50V			MAG5011		
C510	.068 50V			MAG50168		
VC1	50 Trimmer					

* Not normally in distributor's stock. Available thru distributor on order to manufacturer.

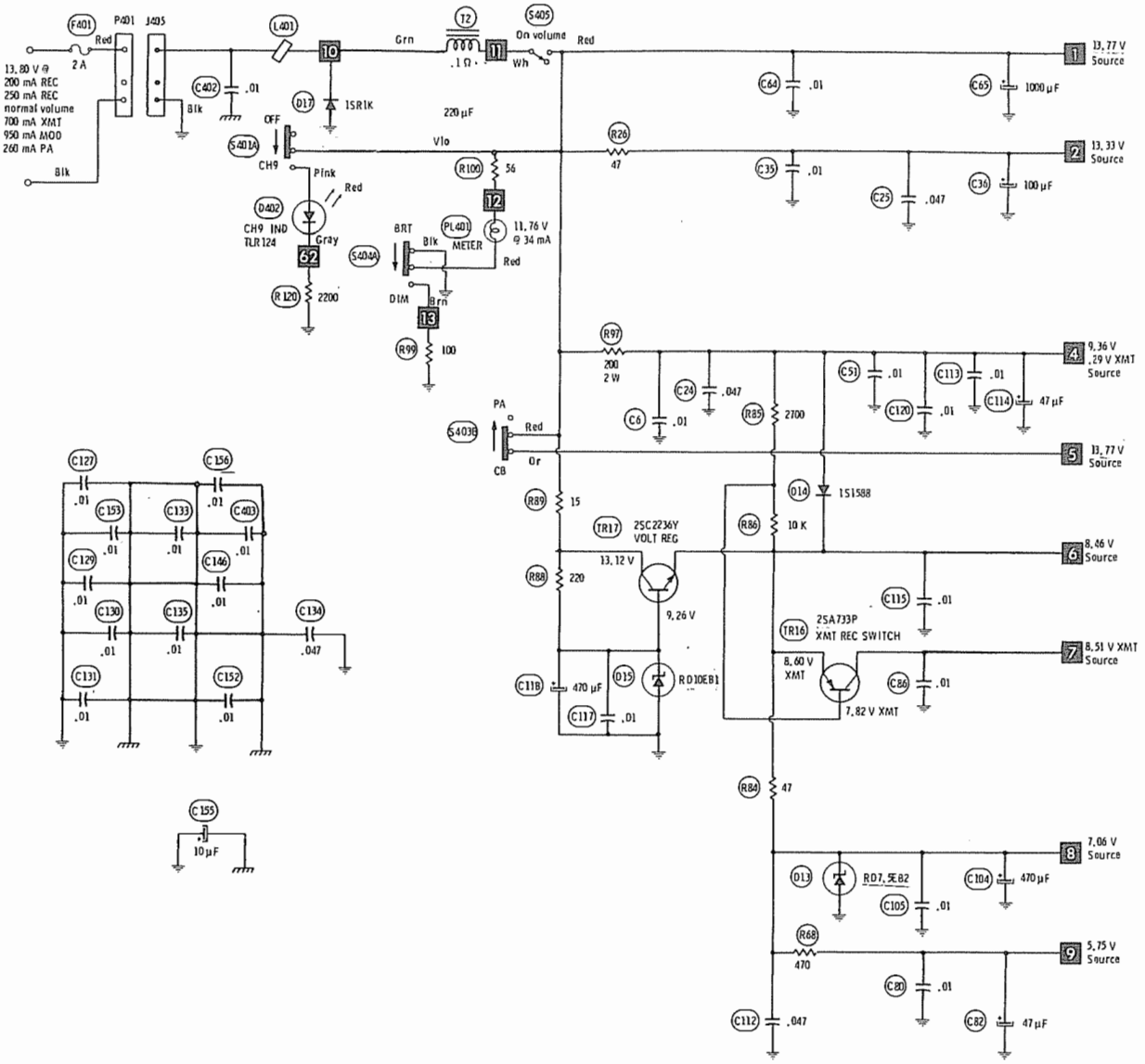

Terminal Guides

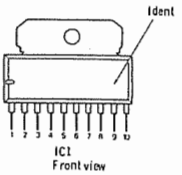

- Circuitry not used in some versions.
- Circuitry used in some versions.
- Nominal value
- Ground
- Chassis
- See parts list
- Common tie point
- Signal path
- Voltage path

Measurements made in Channel 19 with switching in receive unless noted.
Item numbers in rectangles appear in the alignment/adjustment instructions.
Supply voltage maintained as shown at input.
Voltages measured with digital meter, no signal.
Controls adjusted for normal operation.
Terminal identification may not be found on unit.
Resistors are 1/2W or less, 5% unless noted.
Value in ( ) used in some versions.
Arrow head(s) at coils and transformers indicates accessibility of tuning slug(s).

A PHOTOFACT STANDARD NOTATION SCHEMATIC
WITH CIRCUITRACE

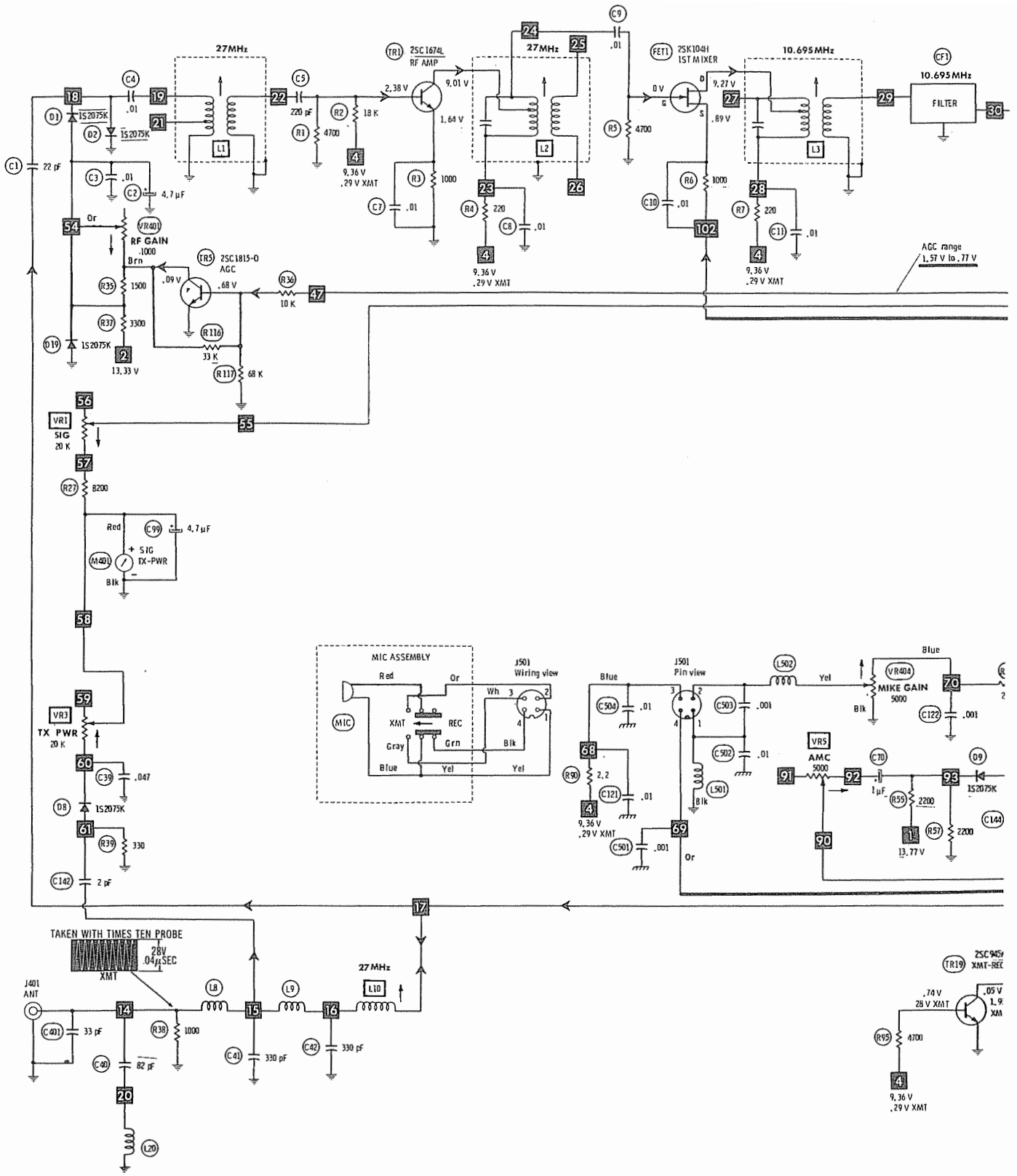
27MHz
TR1 2SC1674L
RF AMP
FET1 2SK104H
1ST MIXER
10.695MHz
CF1
FILTER
RF GAIN
VR401
TR5 2SC1815-O
AGC
AGC range
1.57 V to .77 V
VR1
SIG
20 K
M401
SIG
TX-PWR
VR3
TX PWR
20 K
MIC ASSEMBLY
MIC
J501
Wiring view
J501
Pin view
VR404
MIKE GAIN
5000
VR5
AMC
5000
TAKEN WITH TIMES TEN PROBE
28V
.04μSEC
XMT
J401
ANT
TR19 2SC945
XMT-REC
Terminal Guide
E C B
TR19
Bottom view

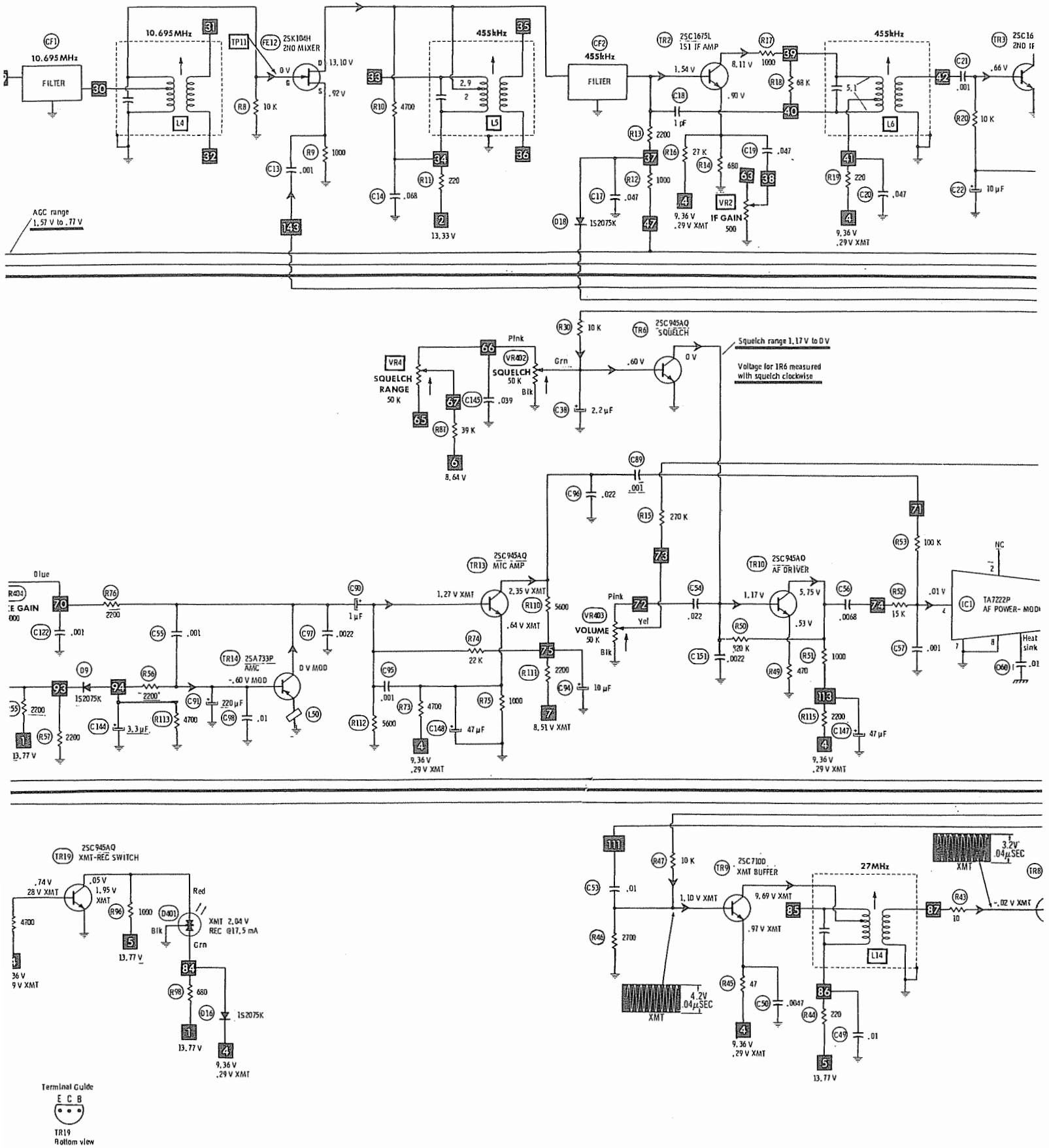

MAIN SCHEMATIC

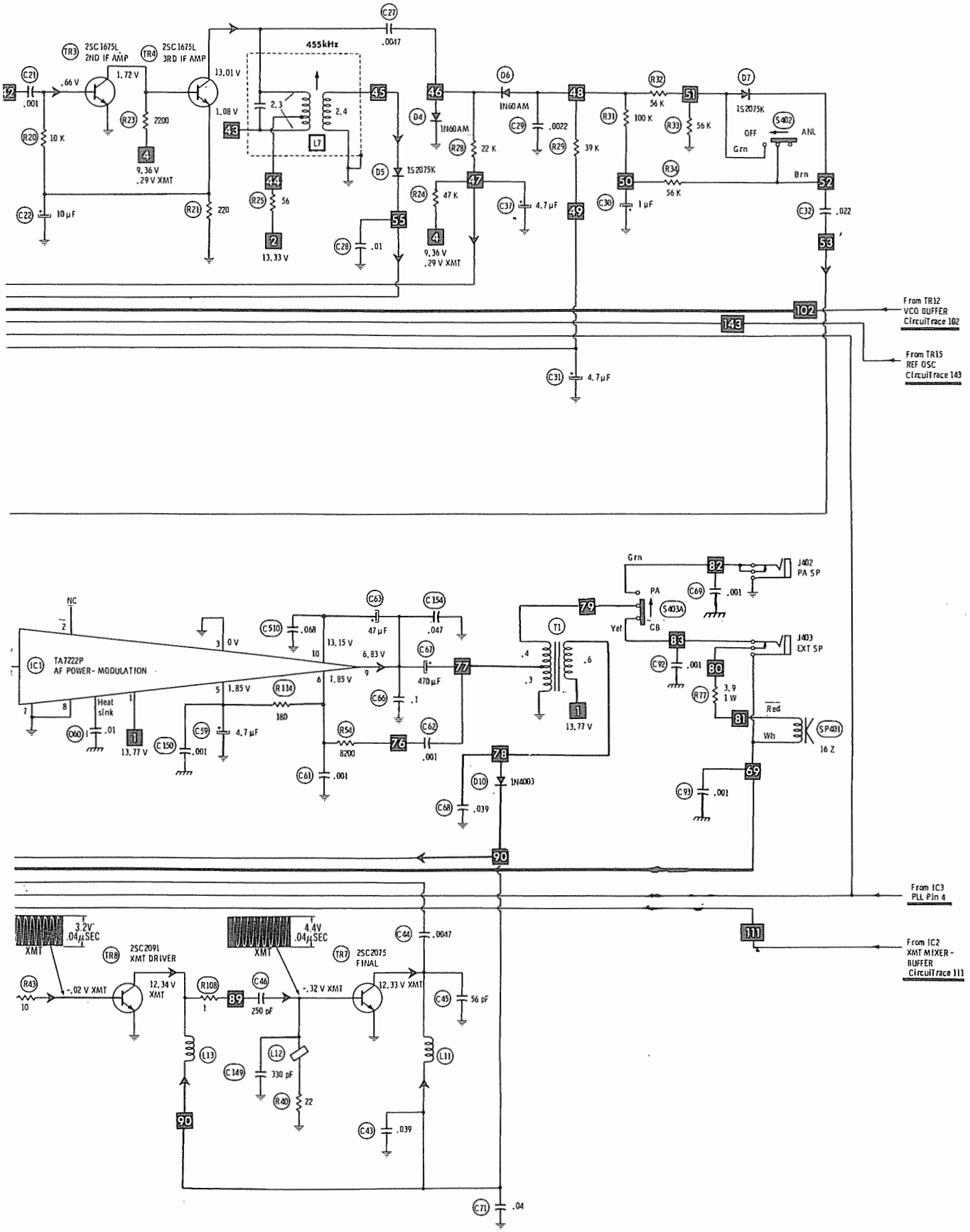
TR3 2SC1675L 2ND IF AMP
TR4 2SC1675L 3RD IF AMP
455kHz
C27 .0047
C21 .001
.66 V
1.72 V
13.01 V
1.08 V
R20 10 K
R23 2200
9.36 V .29 V XMT
C22 10 µF
R21 220
R25 56
13.33 V
L7
D6 1N60AM
D4 1N60AM
D5 1S2075K
R28 22 K
R24 47 K
C28 .01
C29 .0022
R29 39 K
C37 4.7 µF
R32 56 K
R31 100 K
R33 56 K
D7 1S2075K
S402 OFF ANL Grn
R34 56 K
Brn
C30 1 µF
C32 .022
C31 4.7 µF
From TR12 VCO BUFFER CircuitTrace 102
From TR15 REF OSC CircuitTrace 143
IC1 TA7222P AF POWER-MODULATION
NC
Heat sink
D60 .01
C150 .001
C59 4.7 µF
R114 180
C510 .068
C63 47 µF
C154 .047
C67 470 µF
C66 .1
R54 8200
C62 .001
C61 .001
13.15 V
6.83 V
1.85 V
13.77 V
T1
S403A PA CB Yel
Grn
J402 PA SP
C69 .001
J403 EXT SP
C92 .001
R77 3.9 1W
Red
Wh
SP401 16 Z
C93 .001
D10 1N4003
C68 .039
From IC3 PLL Pin 4
From IC2 XMT MIXER-BUFFER CircuitTrace 111
XMT 3.2V .04µSEC
TR8 2SC2091 XMT DRIVER
R43 10
-.02 V XMT
12.34 V XMT
R108 1
C46 250 pF
XMT 4.4V .04µSEC
TR7 2SC2075 FINAL
-.32 V XMT
12.33 V XMT
C44 .0047
C45 56 pF
L13
L12
C149 330 pF
R40 22
L11
C43 .039
C71 .04

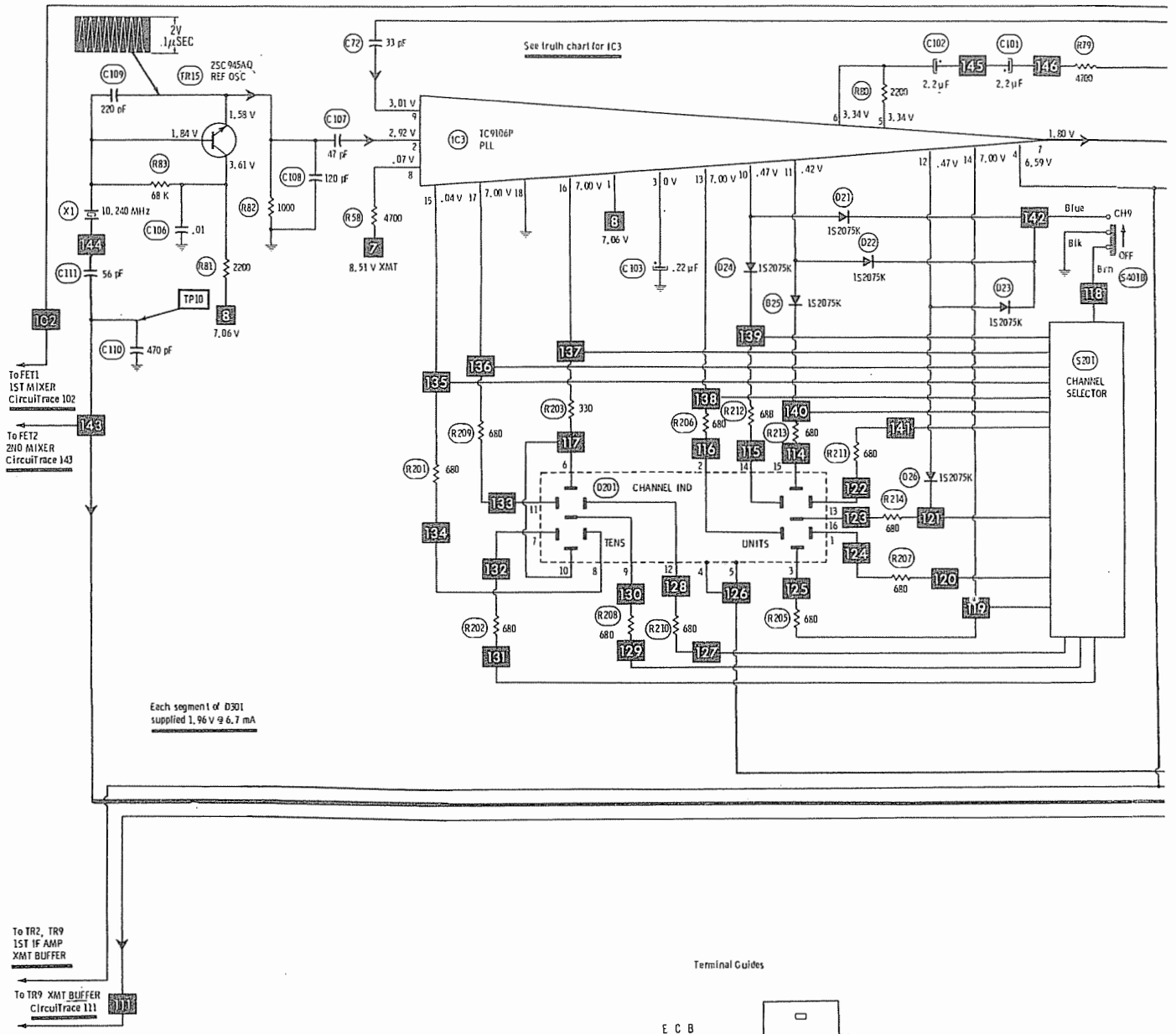

Terminal Guides

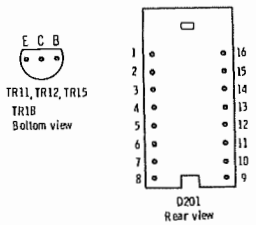

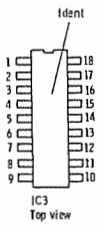

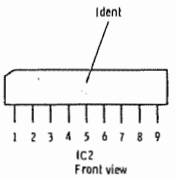

—⋊— Circuitry not used in some versions.
- - - Circuitry used in some versions.
※ Nominal value
⏚ Ground
Chassis
⊖ See parts list
▽ Common tie point
Signal path
Voltage path

Measurements made in Channel 19 with switching in receive unless noted.
Item numbers in rectangles appear in the alignment/adjustment instructions.
Supply voltage maintained as shown at input.
Voltages measured with digital meter, no signal.
Controls adjusted for normal operation.
Terminal identification may not be found on unit.
Resistors are 1/2W or less, 5% unless noted.
Value in ( ) used in some versions.
Arrow head(s) at coils and transformers indicates accessibility of tuning slug(s).

A PHOTOFACT STANDARD NOTATION SCHEMATIC
WITH CIRCUITRACE

PLL SCHEMATIC

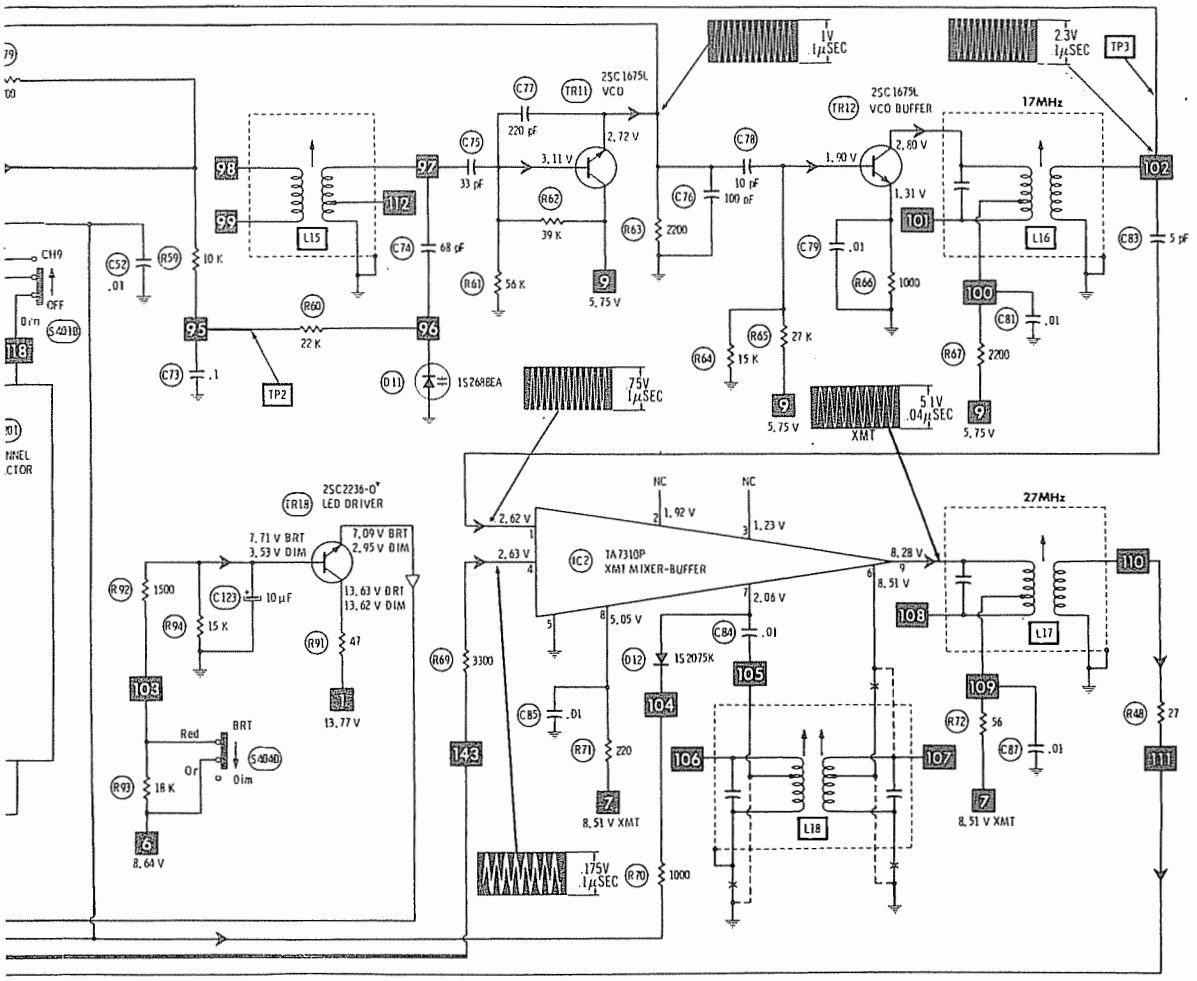
1V
1μSEC
2.3V
1μSEC
TP3
2SC1675L
VCO
TR11
C77
220 pF
2.72 V
3.11 V
C75
33 pF
R62
39 K
C74
68 pF
R61
56 K
R63
2200
C76
100 nF
C78
10 pF
2SC1675L
VCO BUFFER
TR12
1.90 V
2.80 V
1.31 V
17MHz
L15
L16
C79
.01
R66
1000
C83
5 pF
C81
.01
R67
2200
R65
27 K
R64
15 K
5.75 V
.75V
1μSEC
5.1V
.04μSEC
XMT
C52
.01
R50
10 K
R60
22 K
C73
.1
TP2
D11
1S2688EA
C119
OFF
Dim
S4018
2SC2236-O
LED DRIVER
TR18
7.71 V BRT
3.53 V DIM
7.09 V BRT
2.95 V DIM
13.63 V BRT
13.62 V DIM
R92
1500
C123
10 μF
R94
15 K
R91
47
13.77 V
Red
BRT
Or
Dim
S4048
R93
18 K
8.64 V
NC
1.92 V
1.23 V
2.62 V
2.63 V
IC2
TA7310P
XMT MIXER-BUFFER
5.05 V
2.06 V
8.28 V
8.51 V
27MHz
L17
C84
.01
D12
1S2075K
R69
3300
C85
.01
R71
220
8.51 V XMT
R72
56
C87
.01
R48
27
L18
.175V
1μSEC
R70
1000

CONTROLS (All wattages 1/2 watt, or less, unless listed)

ITEM No.	FUNCTION	RESISTANCE	REPLACEMENT DATA		
			MFGR. PART No.	MALLORY PART No.	TRW PART No.
VR1	Signal	20K	1900-204	RVA0911H253	U260R253B
VR2	IF Gain	500	1900-205	RVA0911H501	U260R501B
VR3	TX PWR	20K	1900-204	RVA0911H253	U260R253B
VR4	Squelch Range	50K	1900-202	RVA0911H503	U260R503B
VR5	AMC	500	1900-205	RVA0911H501	U260R501B
VR401	RF Gain	1000	1900-130		
VR402	Squelch,	50K	1900-124		
VR403	Volume/Power Switch	50K	1900-104		
VR404	Mic Gain	5000	1900-131		

COILS (RF-IF)

ITEM No.	FUNCTION	REPLACEMENT DATA			REMARKS
		PART No.	OTHER IDENTIFICATION	MILLER PART No.	
L1	REC ANT (27MHz)	2200-001	LA-029	CBS740-T	LLAY029001
L2	REC RF (27MHz)	2200-082	LA-138		LLAY138001
L3	IF (10.69MHz)	2200-004	LA-181		LLAY181001
L4	IF (10.69MHz)	2200-004	LA-181		LLAY181001
L5	IF (455kHz)	2200-081	LA-106	B517	LLAY106001
L6	IF (455kHz)	2200-048	LA-204		LLAY204001
L7	IF (455kHz)	2200-086	LA-276		LLAY276001
L8	RF Choke	2200-548	LE-096		LLEY096001
L9	RF Choke	2200-087	LE-093		LLEY093001
L10	Final (27MHz)	2200-034	LC-073	C8305	LLCY073001
L11	RF Choke	2200-017	LO-033	4588	LLAY033001
L13	RF Choke	2200-020	LC-130	CB304	LLCY130001
L14	XMT Buffer (27MHz)	2200-085	LA-208		LLAY208001
L15	VCO (17MHz)	2200-083	LA-165		LLAY165001
L16	VCO Buffer (17MHz)	2200-047	LA-201		LLAY201001
L17	XMT Buffer (27MHz)	2200-084	LA-088	CBS717-TC	LLAY088001
L18	XMT Mixer (27MHz)	2200-045	LA-198		LLAY198001
L20	RF Choke	2200-020	LC-130	CB304	LLCY130001
L501	RF Choke	2200-019	LO-055		LLAY055001
L502	RF Choke	2200-019	LO-055		LLAY055001

FILTER CHOKE

ITEM No.	RATINGS			REPLACEMENT DATA			NOTES
	CURRENT (Measured)	DC RES.	INDUCTANCE (0 CURRENT 1000~)	MFGR. PART No.	THORDARSON PART No.	TRIAD PART No.	
T2	950mA	.1	.86mH	2300-001	TR507		

TRANSFORMER (Audio Output)

ITEM No.	IMPEDANCE		REPLACEMENT DATA			NOTES
	PRI.	SEC.	MFGR. PART No.	THORDARSON PART No.	TRIAD PART No.	
T1	6.25	1 2 16 33	2600-013	TR507		

SPEAKER

ITEM No.	TYPE	REPLACEMENT DATA		NOTES
		MFGR. PART No.	QUAM PART No.	
SP401	4" PM, 16 Ohms	3100-008	4A1Z16	

FUSE DEVICES

ITEM No.	DESCRIPTION	REPLACEMENT DATA						
		PART No.		BUSS PART No.		LITTELFUSE PART No.		WORKMAN PART No.
		DEVICE	HOLDER	DEVICE	HOLDER	DEVICE	HOLDER	DEVICE
F401	2A Quick-acting	ZFSY014001		AGC2	HBJ	312002	150145	FG2-2

MISCELLANEOUS

ITEM No.	PART NAME	PART No.	NOTES
CF1	Ceramic Filter	2200-301	10.69MHz
CF2	Ceramic Filter	2200-302	455kHz
D201	LED	2000-303	Channel Display (UR202)
D401	LED	2000-343	TX/RX (TLGR101)
D402	LED	2000-347	Channel 9 Indicator (TLR124)
J401	Jack	1100-002	Antenna (JK-035)
J402	Jack	1100-021	PA (JK-089)
J403	Jack	1100-021	EXT Speaker (JK-089)
J405	Jack	1100-003	Power (JK-052)
J501	Jack	1100-004	Microphone (JK-072)
L12	Ferrite Bead	2200-052	(LD-087)
L50	Ferrite Bead	2200-052	(LD-087)
L401	Ferrite Bead	2200-101	(LD-088)
M401	Meter	2900-002	S/RF (MT-134)
MIC	Microphone	AMKY153001	(MK-153)
PL401	Lamp		Meter (11.76V @ 34mA)
S201	Switch	3000-125	Channel Selector (SR-261)
S401	Switch	3000-010	Channel 9 Indicator (SW-150)
S402	Switch	3000-010	ANL (SW-150)
S403	Switch	3000-010	CB/PA (SW-150)
S404	Switch	3000-010	DIM (SW-150)
X1	Crystal	2100-013	10.24MHz (OX-074)
	P.C. Board	PPCY417015	Main (PC-417AE)
	P.C. Board	PPCY719011	Channel Selector (PC-719AA)
	P.C. Board	PPCY421011	LED (PC-421AA)
	P.C. Board	PPCY266011	MIC Jack (PC-266AA)

CABINETS & CABINET PARTS (When ordering specify model, chassis & color)

ITEM	PART No.
Cover, Top	3300-118
Cover, Bottom	3300-119
Knob, Channel Select	1300-001
Knob, Control	1300-002

ITEM	PART No.
Knob, Pushbutton (4 used)	1300-003
Microphone Hanger	3300-401
Mounting Bracket	3300-210
Display Window (Optical Filter)	3400-108

WIRING DATA

Cable (Speaker)(Unshielded).....	Use BELDEN No. 8782 (AWG24)(4 colors)
Shielding Strap.....	Use BELDEN No. 8660 (3/16" width)
Hook-up Wire (General Use).....	Use BELDEN No. 8524 (AWG22)(13 colors)
Hook-up Wire (Shielded).....	Use BELDEN No. 8401 (Braided Shield)(1 conductor)(AWG25)
	Use BELDEN No. 8421 (Spiral Shield)(1 conductor)(AWG25)
	Use BELDEN No. 8737 (Spiral Shield)(2 conductor)(AWG22)
Microphone Cable (Coiled).....	Use BELDEN No. 8497 (3 conductor-1 shielded)(6 ft.)(AWG22)
Microphone Cable (Coiled).....	Use BELDEN No. 9466 (3 conductor-1 shielded)(6 ft.)(AWG28)
Microphone Cable (Coiled).....	Use BELDEN No. 9468 (3 conductor-1 shielded)(6 ft.)(AWG31)

NOTE

Repair or adjustment of transmitter circuits must be under supervision of a person with first-or second-class radiotelephone license.
(Refer to FCC Rules and Regulations Part 95, Subpart C & D.)

The frequency of the transmitter should be checked periodically with a secondary frequency standard to insure proper and legal operation.

Best results will be obtained when adjusting the final RF output circuit if the antenna normally used is connected and the chassis is as nearly in the cabinet as possible.

Connect either 50-ohm dummy load or the normally used antenna system.

Model 3-5804F

HOWARD W. SAMS & CO., INC. Indianapolis, Indiana 46206

ALIGNMENT INSTRUCTIONS

CAUTION: Use isolation transformer or observe polarity when connecting test equipment.
Maintain line voltage at 120V AC. Allow a 15-minute warm-up period.
Adjustments made with 13.8 volt DC input.
Connect low sides of test equipment to ground unless specified otherwise.
Connect 50-ohm dummy load or antenna before keying transmitter.
Connect microphone.

Suggested Alignment Tools:	GC ELECTRONICS:
L1 thru L4, L7, L9, L10, L12	9440
L6, L8	5000, 5009, 8276, 8728, 8728A, 9089
L16	8728, 8728A, 9091

SYNTHESIZER ALIGNMENT

TEST EQUIPMENT	TRANSCEIVER	ADJUST	REMARKS
Input of frequency counter to TP5 (TR9 Emitter).	Ch. 19		Check for 10.240MHz.
Input of DC meter to TP1 (Junction of R13 and R51).	Ch. 1	L3	Adjust for 1.40 volts. Check for approximately 2.20 volts on channel 40.
Input of DC meter to TP1 (Junction of R13 and R51).	Ch. 1, XMT		Check for approximately 2.22 volts on channel 1 and 3.41 volts on channel 40.
Input of frequency counter to TP6 (IC3 Pin 9).	Ch. 1		Check for 16.270MHz. Check all channels. (See Truth Chart for correct frequencies.)
Input of frequency counter to TP6 (IC3 Pin 9).	Ch. 1, XMT		Check for 16.725MHz. Check all channels. (See Truth Chart for correct frequencies.)

RECEIVER ALIGNMENT

Connect an AC VTVM or AF wattmeter across speaker voice coil.
Adjust volume control to obtain a suitable indication.
Set generator output low enough to prevent AGC limiting.
Squelch MINIMUM, CB/PA CB.

SSB

TEST EQUIPMENT	TRANSCEIVER	ADJUST	REMARKS
Output of signal generator thru .01 to TP7 (D4 anode). 455kHz, 1000Hz @ 30% modulation.	Ch. 19	L8, L6	Adjust for maximum audio output.
Output of signal generator to antenna input. 27.185MHz, 1000Hz @ 30% modulation	Ch. 19	L7, L4, L2, L1	Adjust for maximum audio output. Readjust L6 and L8 for maximum.

RECEIVER ADJUSTMENTS

Connect an AC VTVM or AF wattmeter across speaker voice coil.
Adjust volume control to obtain a suitable indication.
CB/PA CB

TEST EQUIPMENT	TRANSCEIVER	ADJUST	REMARKS
Output of signal generator to antenna input. 27.185MHz,1000Hz @ 30% modulation.	Ch. 19 Squelch Maximum	VR1	SQUELCH RANGE Adjust so squelch just breaks.
Output of signal generator to antenna input. 27.185MHz,1000Hz @ 30% modulation. Output 100uV.	Ch. 19	VR2	SIG METER Adjust for 9 on SIG scale of meter.

TRANSMITTER ALIGNMENT

Connect an RF wattmeter and 50-ohm, 25-watt dummy load to antenna connector.
NOTE: Be sure to check transmit frequency and power on all active channels after alignment of transmitter.
See page 4 for channel frequencies.

TEST EQUIPMENT	TRANSCEIVER	ADJUST	REMARKS
Input of RF wattmeter to antenna input.	Ch. 19	L9,L10,L12, L16	Adjust for maximum RF output.
Input of RF wattmeter to antenna input.	Ch. 19	L16	Adjust for 4.0 watts RF output maximum.

TRANSMITTER ADJUSTMENTS

Connect an RF wattmeter and 50-ohm, 25-watt dummy load to antenna connector.
NOTE: Be sure to check transmit frequency and power on all active channels after adjustment of transmitter.
See page 4 for channel frequencies.

TEST EQUIPMENT	TRANSCEIVER	ADJUST	REMARKS
Input of RF wattmeter to antenna input.	Ch. 19, XMT	VR3	TX PWR METER Adjust so TX PWR meter agrees with RF wattmeter.

TRUTH CHART

CHANNEL	1 = 7.46Volts 0 = 0 Volts CHANNEL INPUT CODES IC3 PINS								REC VCO OUTPUT IN MHz AT TP6	XMT VCO OUTPUT IN MHz AT TP6
	17	16	15	14	13	12	11	10		
1	1	1	1	1	1	1	1	1	16.270	16.725
2	1	1	1	0	0	0	0	1	16.280	16.735
3	1	1	1	0	1	0	0	1	16.290	16.745
4	1	1	1	1	1	0	1	0	16.310	16.765
5	1	1	1	0	1	0	0	0	16.320	16.775
6	1	1	1	0	0	0	1	0	16.330	16.785
7	1	1	1	1	1	1	0	1	16.340	16.795
8	1	1	1	0	0	0	0	0	16.360	16.815
9	1	1	1	1	1	0	0	0	16.370	16.825
10	1	1	0	0	0	1	0	0	16.380	16.835
11	1	1	0	1	1	1	1	1	16.390	16.845
12	1	1	0	0	0	0	0	1	16.410	16.865
13	1	1	0	0	1	0	0	1	16.420	16.875
14	1	1	0	1	1	0	1	0	16.430	16.885
15	1	1	0	0	1	0	0	0	16.440	16.895
16	1	1	0	0	0	0	1	0	16.460	16.915
17	1	1	0	1	1	1	0	1	16.470	16.925
18	1	1	0	0	0	0	0	0	16.480	16.935
19	1	1	0	1	1	0	0	0	16.490	16.945
20	1	0	1	0	0	1	0	0	16.510	16.965
21	1	0	1	1	1	1	1	1	16.520	16.975
22	1	0	1	0	0	0	0	1	16.530	16.985
23	1	0	1	0	1	0	0	1	16.560	17.015
24	1	0	1	1	1	0	1	0	16.540	16.995
25	1	0	1	0	1	0	0	0	16.550	17.005
26	1	0	1	0	0	0	1	0	16.570	17.025
27	1	0	1	1	1	1	0	1	16.580	17.035
28	1	0	1	0	0	0	0	0	16.590	17.045
29	1	0	1	1	1	0	0	0	16.600	17.055
30	1	0	0	0	0	1	0	0	16.610	17.065
31	1	0	0	1	1	1	1	1	16.620	17.075
32	1	0	0	0	0	0	0	1	16.630	17.085
33	1	0	0	0	1	0	0	1	16.640	17.095
34	1	0	0	1	1	0	1	0	16.650	17.105
35	1	0	0	0	1	0	0	0	16.660	17.115
36	1	0	0	0	0	0	1	0	16.670	17.125
37	1	0	0	1	1	1	0	1	16.680	17.135
38	1	0	0	0	0	0	0	0	16.690	17.145
39	1	0	0	1	1	0	0	0	16.700	17.155
40	0	1	0	0	0	1	0	0	16.710	17.165

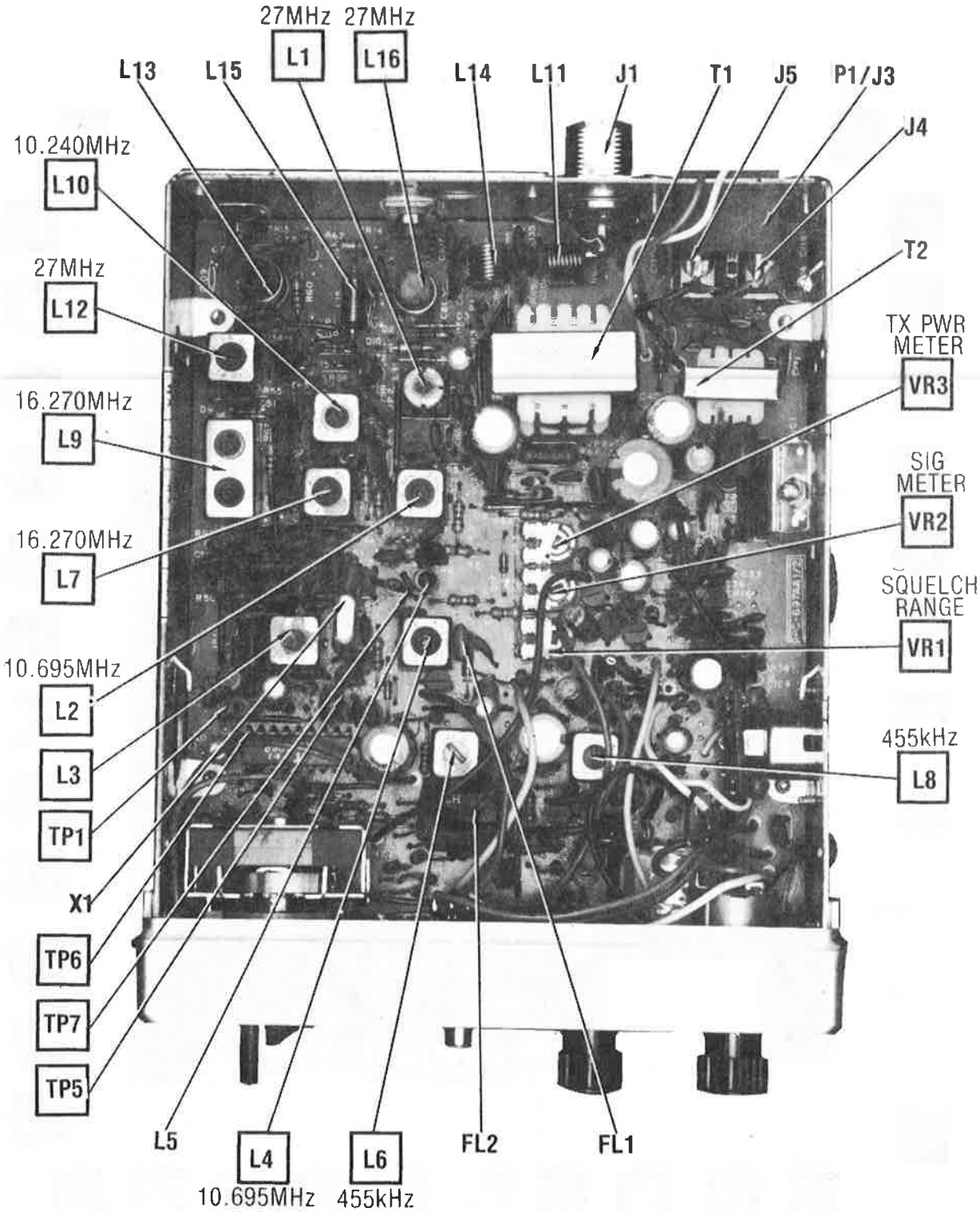

CHASSIS-BOTTOM

A Howard W. Sams CIRCUITRACE® Photo

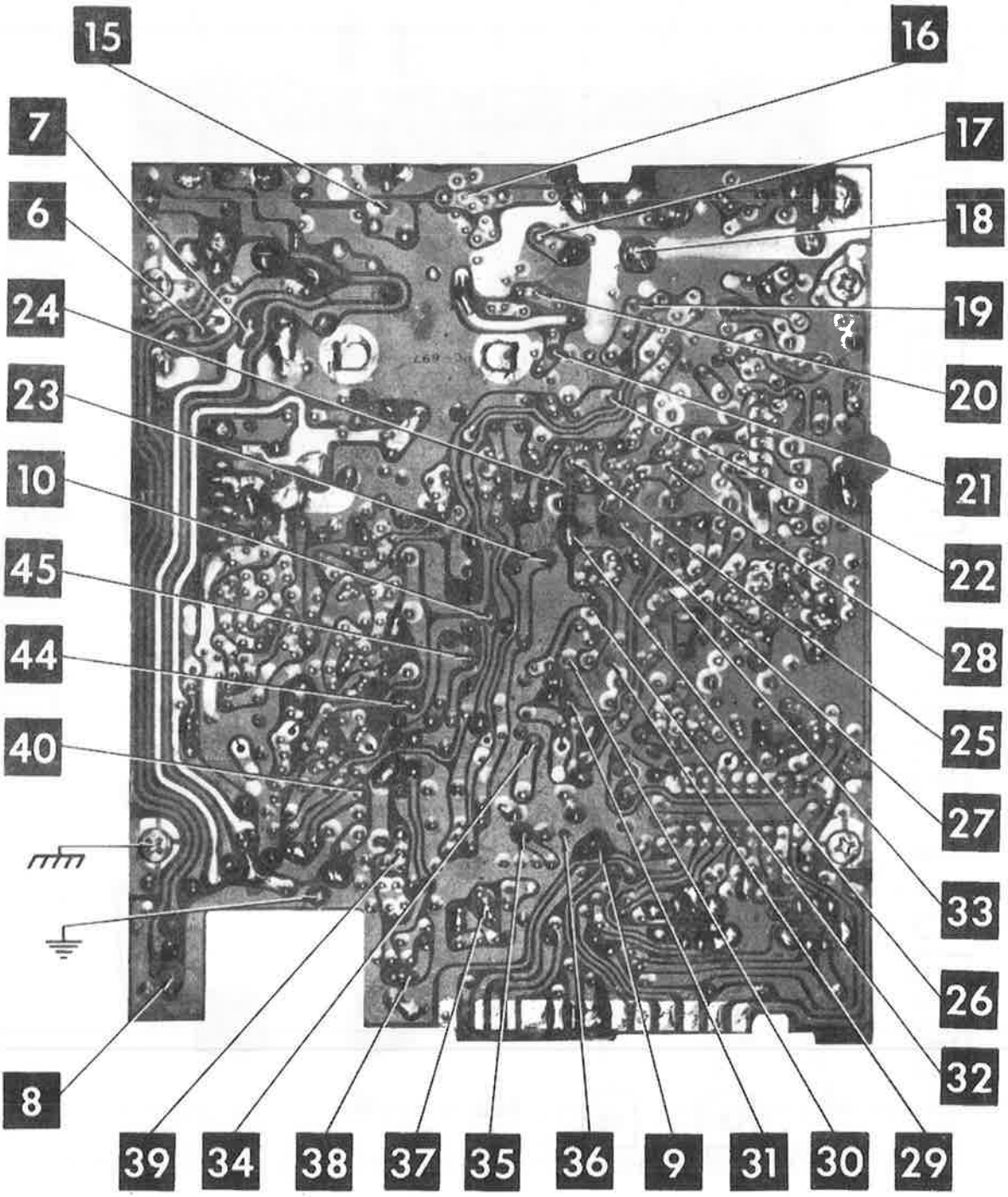

MAIN BOARD

A Howard W. Sams CIRCUITRACE® Photo

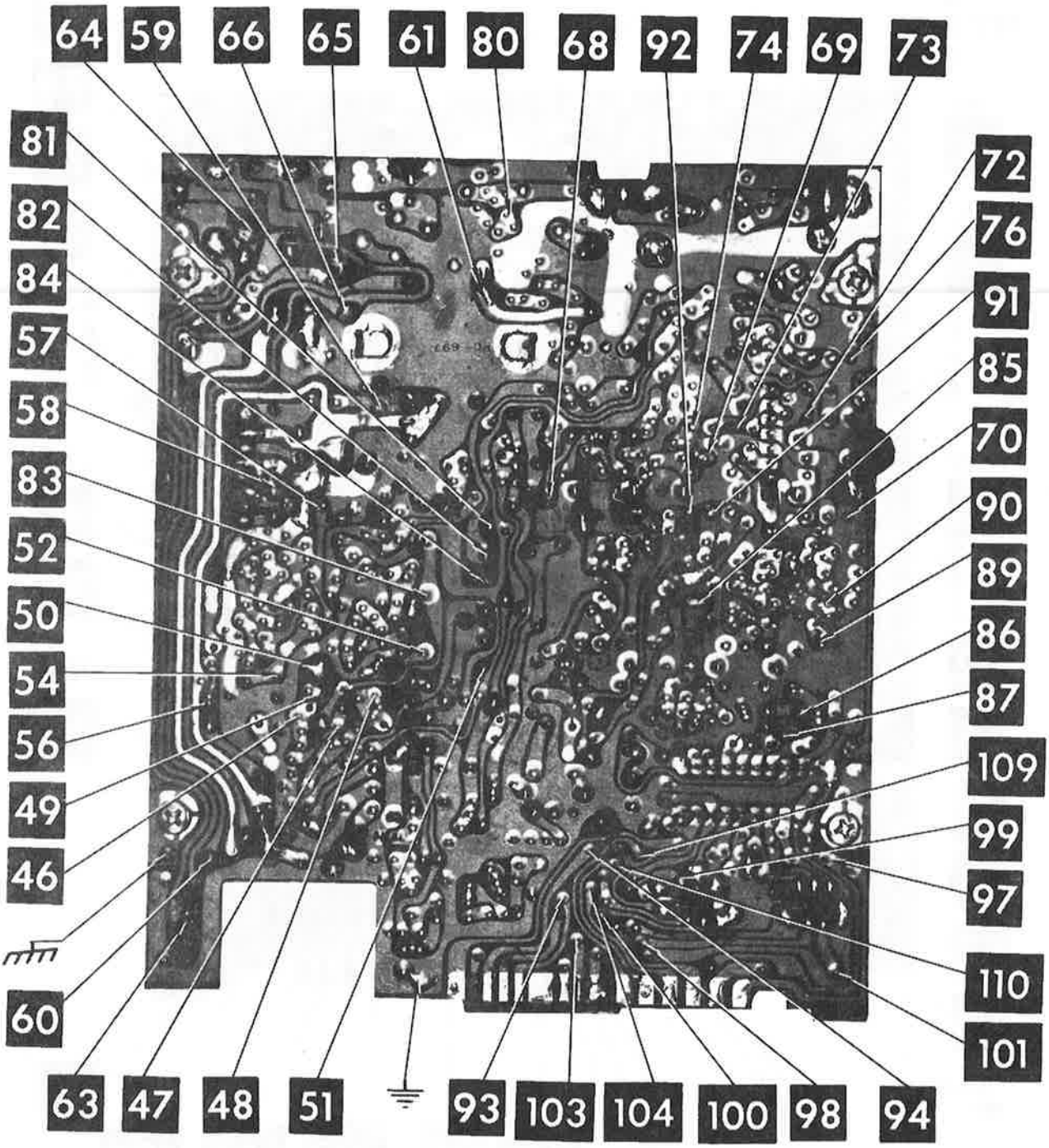

MAIN BOARD

A Howard W. Sams CIRCUITRACE™ Photo

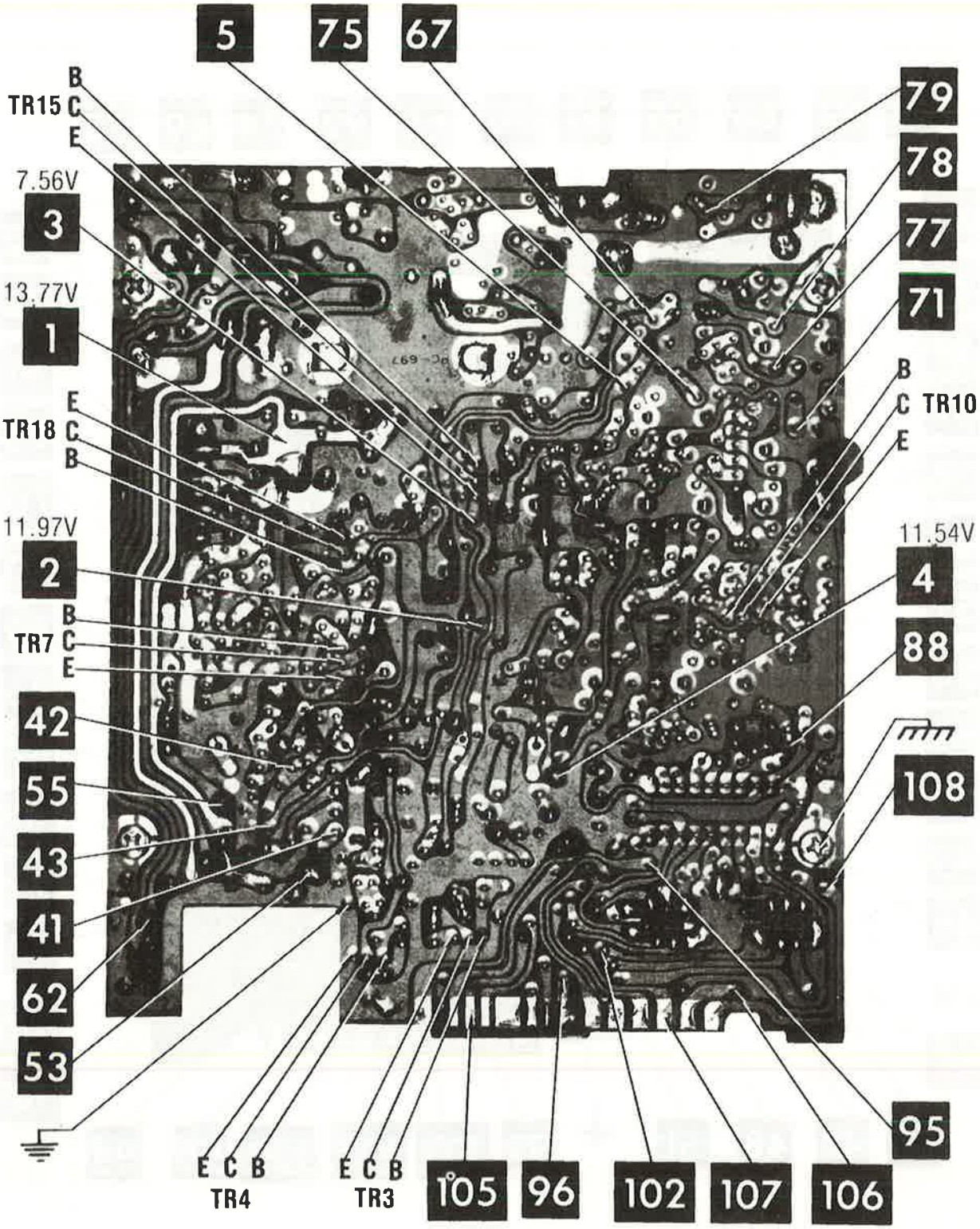

MAIN BOARD

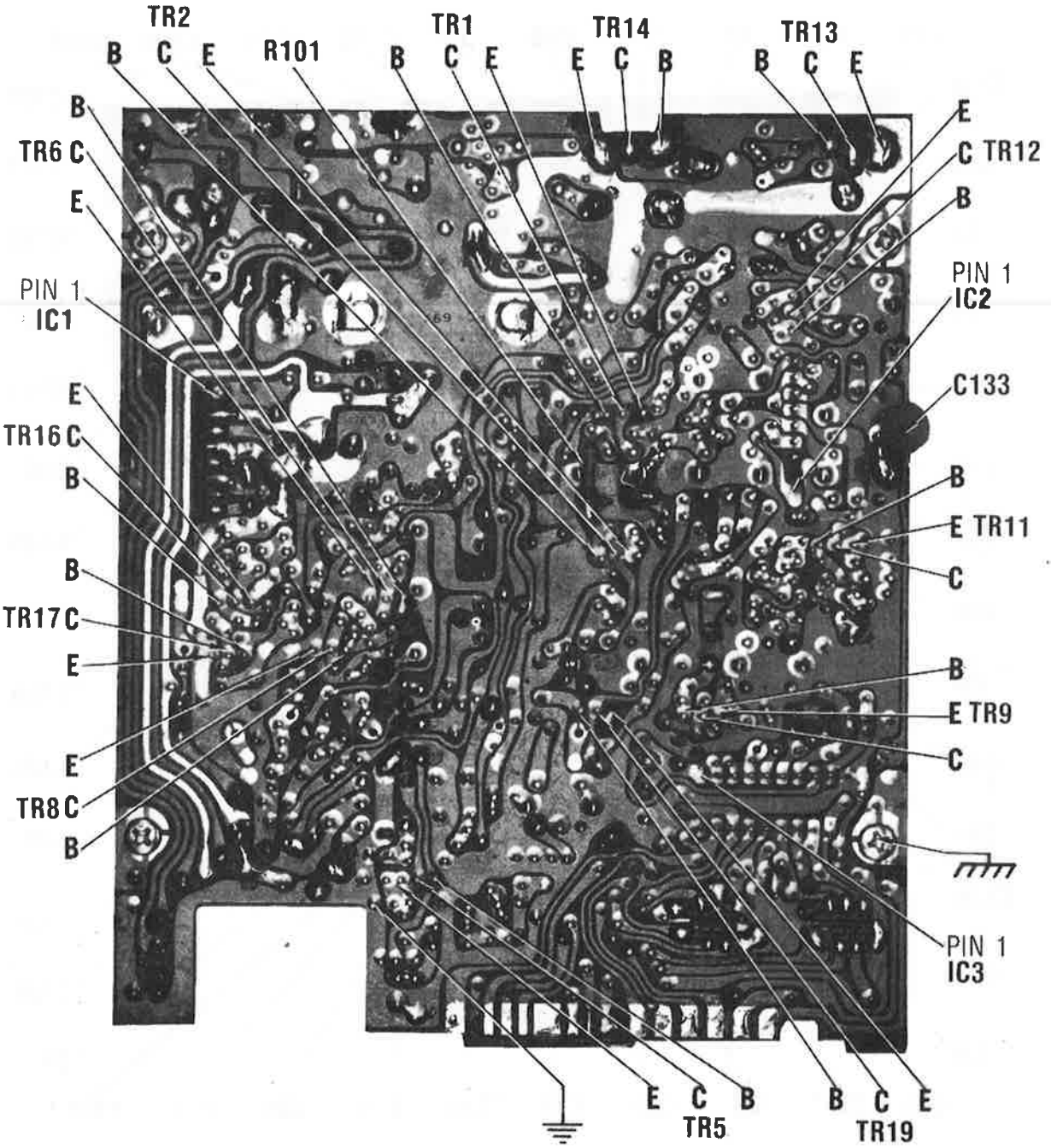

MAIN BOARD

GENERAL ELECTRIC MODEL 3-5804F

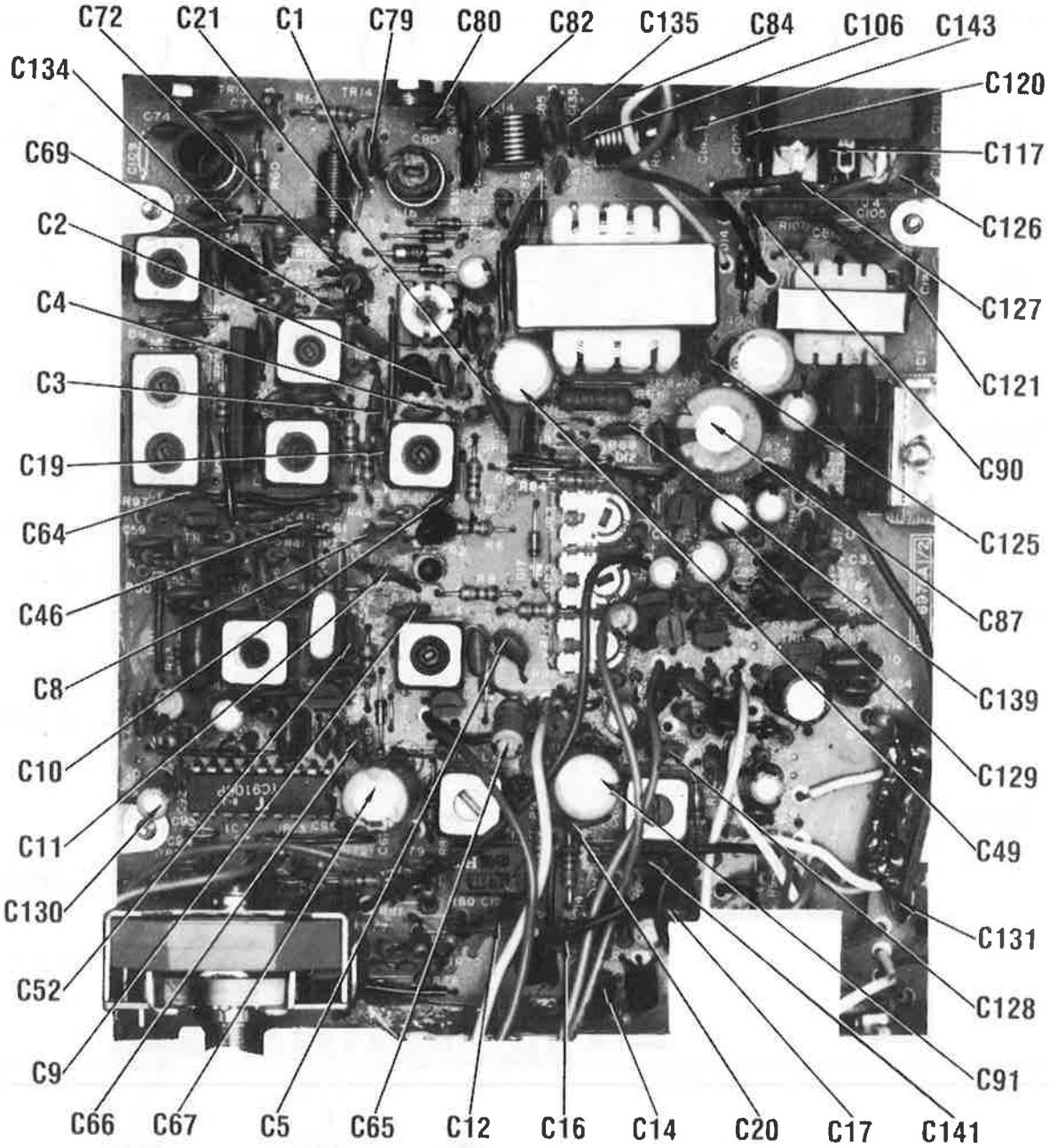
C72
C21
C1
C79
C80
C82
C135
C84
C106
C143
C134
C120
C69
C117
C2
C126
C4
C127
C3
C121
C19
C90
C64
C125
C46
C87
C8
C139
C10
C129
C11
C49
C130
C131
C52
C128
C9
C91
C66
C67
C5
C65
C12
C16
C14
C20
C17
C141

MAIN BOARD

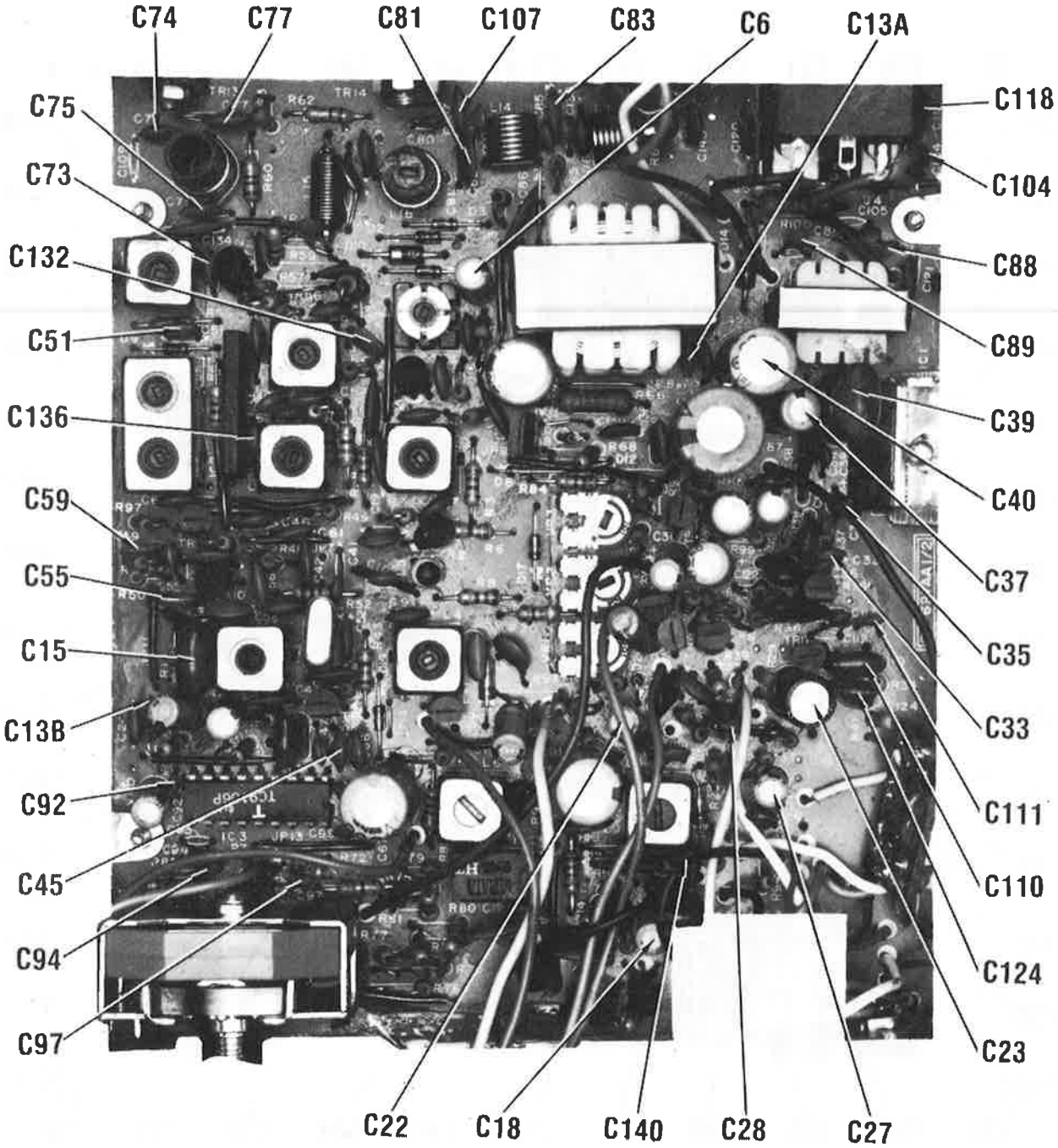
C74
C77
C81
C107
C83
C6
C13A
C118
C75
C104
C73
C88
C132
C89
C51
C39
C136
C40
C59
C37
C55
C35
C15
C33
C13B
C111
C92
C110
C45
C124
C94
C23
C97
C22
C18
C140
C28
C27

MAIN BOARD

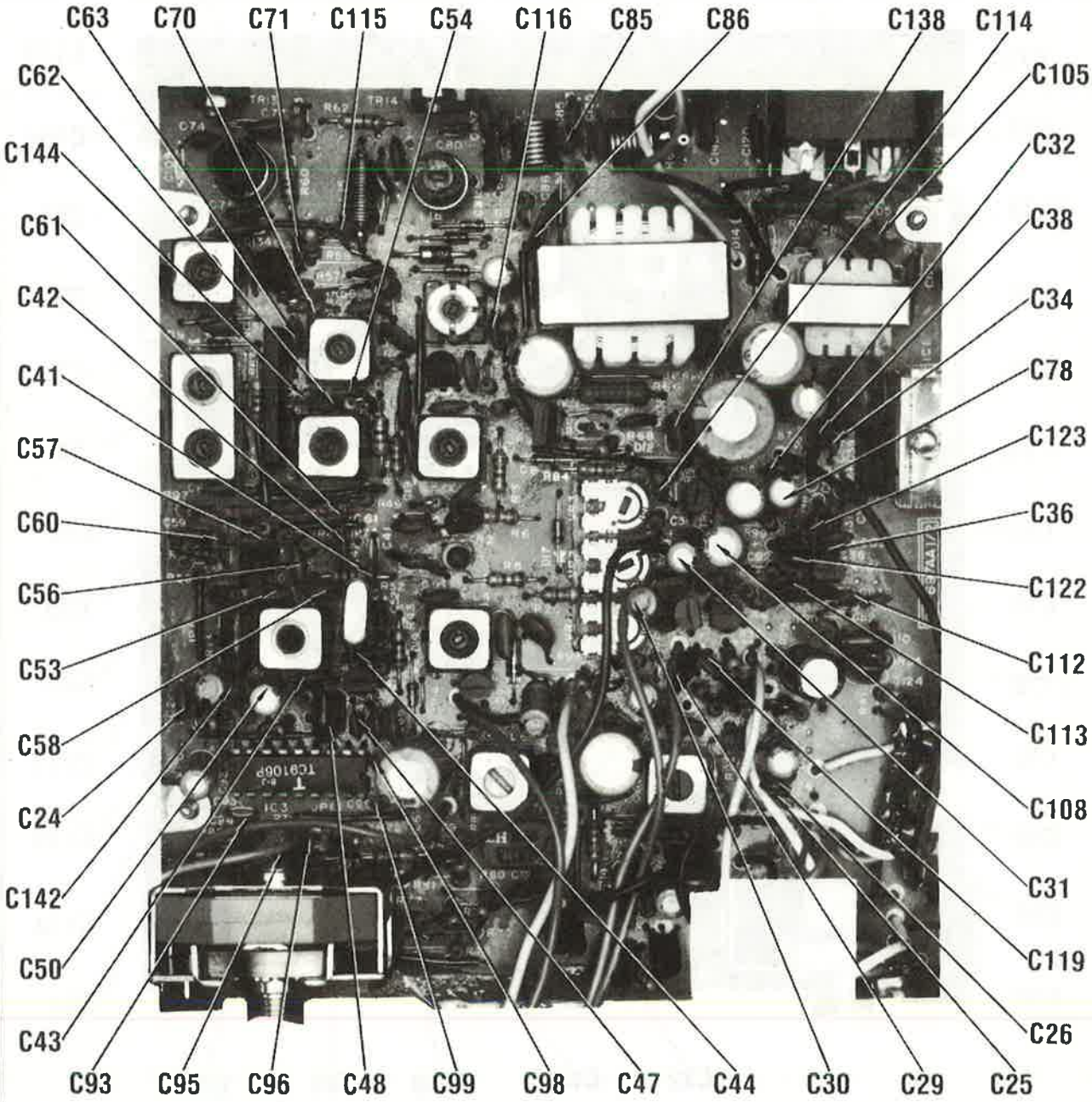
C63
C70
C71
C115
C54
C116
C85
C86
C138
C114
C62
C105
C144
C32
C61
C38
C42
C34
C41
C78
C57
C123
C60
C36
C56
C122
C53
C112
C58
C113
C24
C108
C142
C31
C50
C119
C43
C26
C93
C95
C96
C48
C99
C98
C47
C44
C30
C29
C25

MAIN BOARD

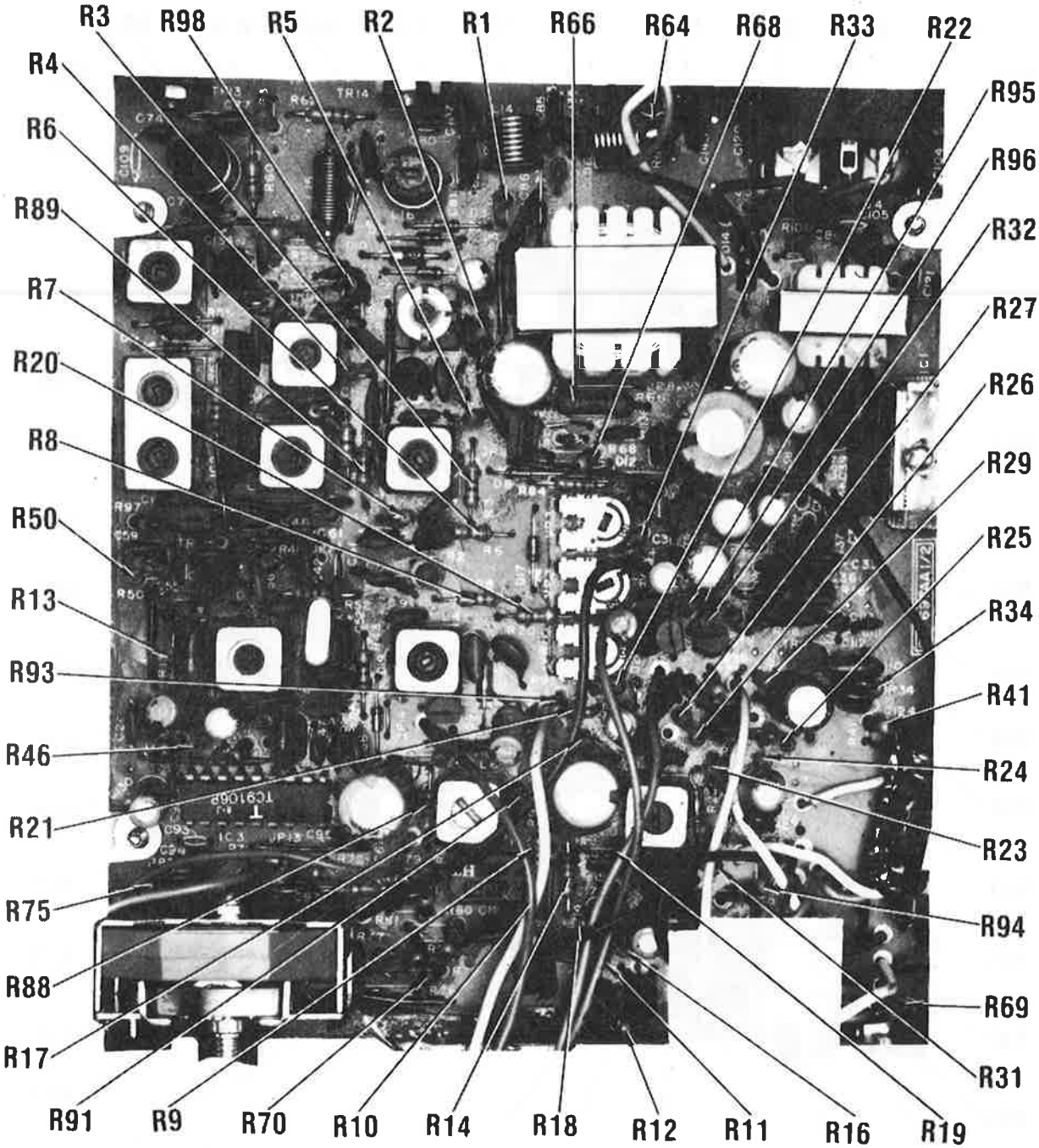
R3
R98
R5
R2
R1
R66
R64
R68
R33
R22
R4
R95
R6
R96
R89
R32
R7
R27
R20
R26
R8
R29
R50
R25
R13
R34
R93
R41
R46
R24
R21
R23
R75
R94
R88
R69
R17
R31
R91
R9
R70
R10
R14
R18
R12
R11
R16
R19

MAIN BOARD

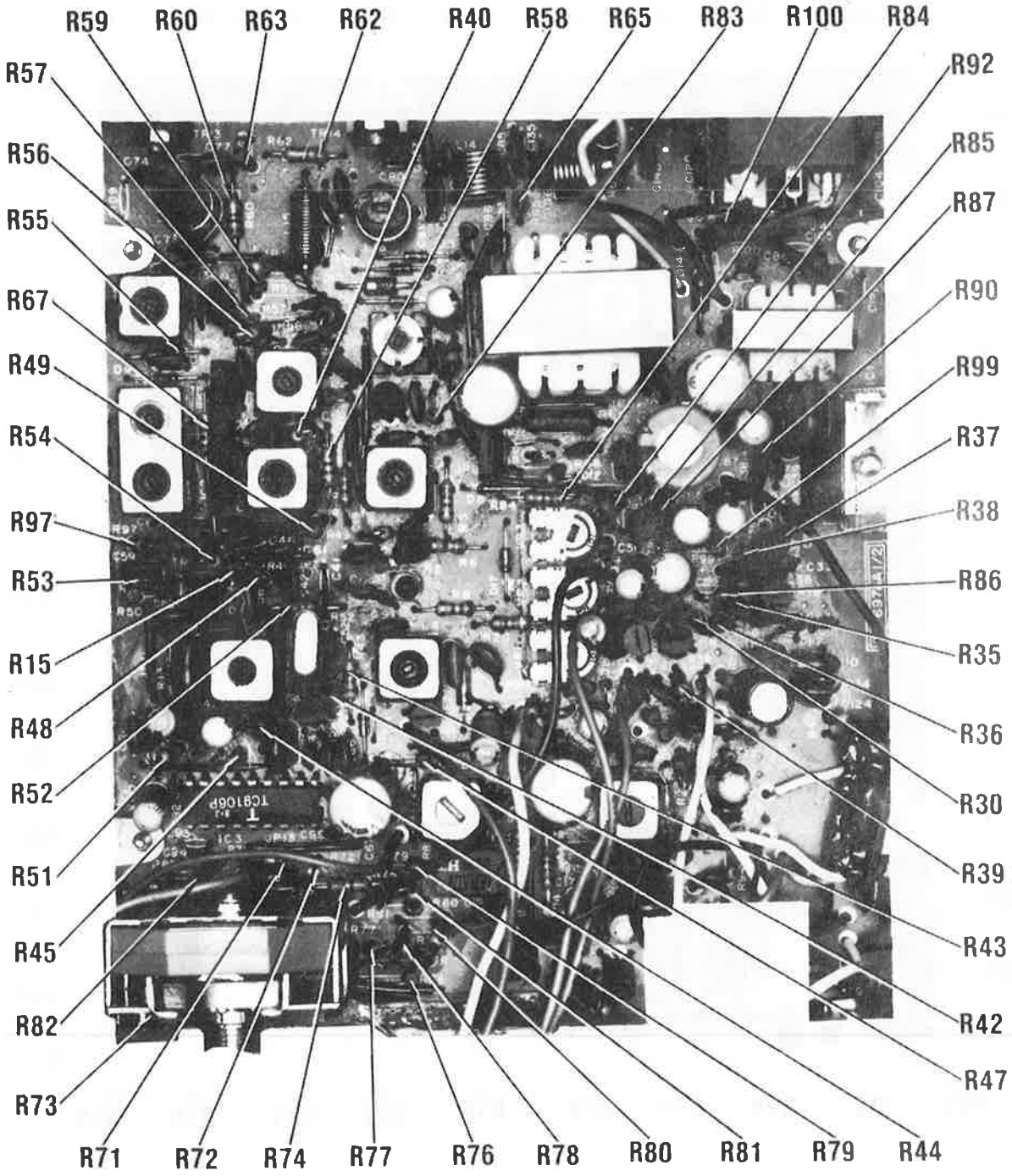
R59
R60
R63
R62
R40
R58
R65
R83
R100
R84
R57
R92
R56
R85
R55
R87
R67
R90
R49
R99
R54
R37
R97
R38
R53
R86
R15
R35
R48
R36
R52
R30
R51
R39
R45
R43
R82
R42
R73
R47
R71
R72
R74
R77
R76
R78
R80
R81
R79
R44

MAIN BOARD

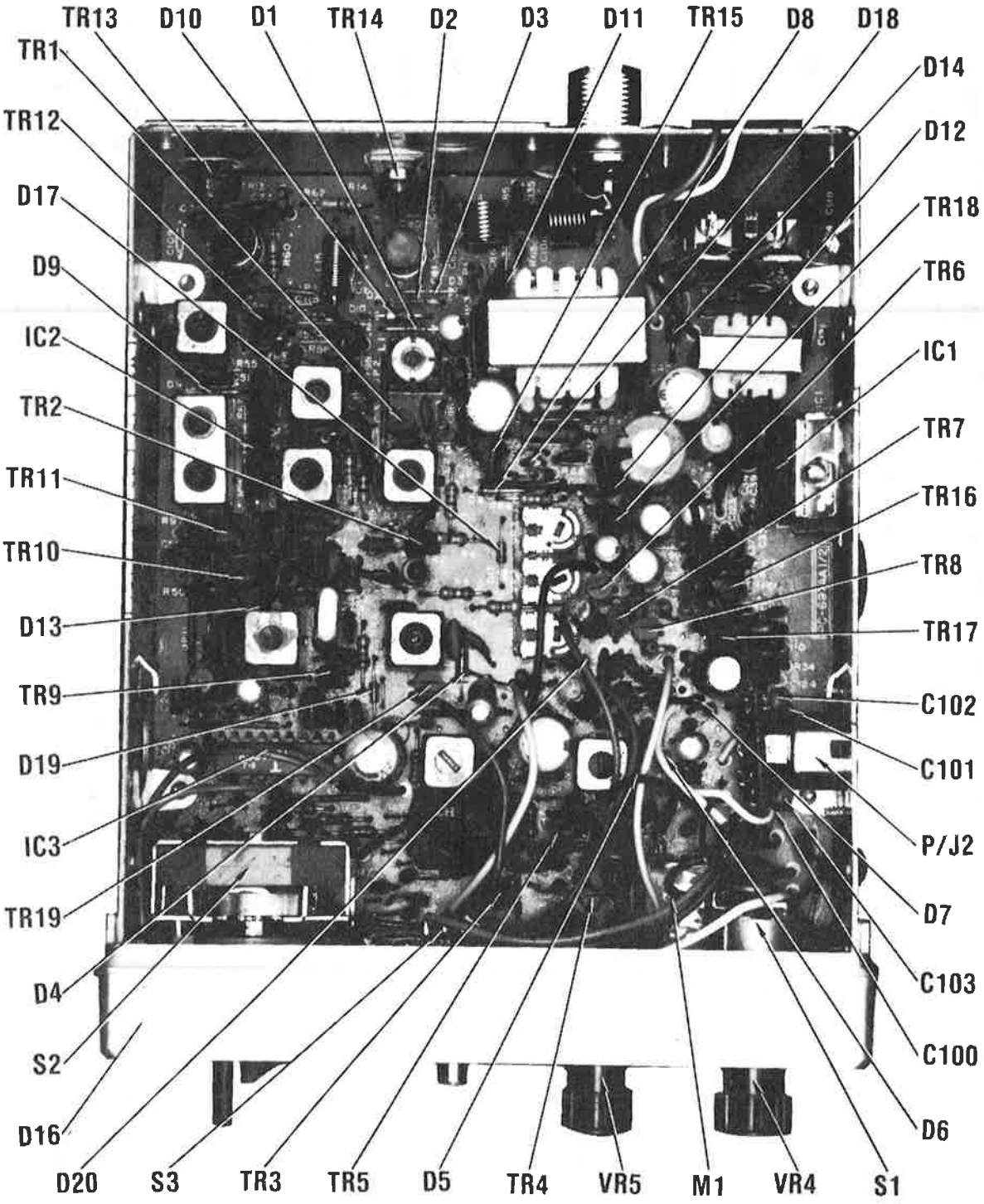

CHASSIS-BOTTOM

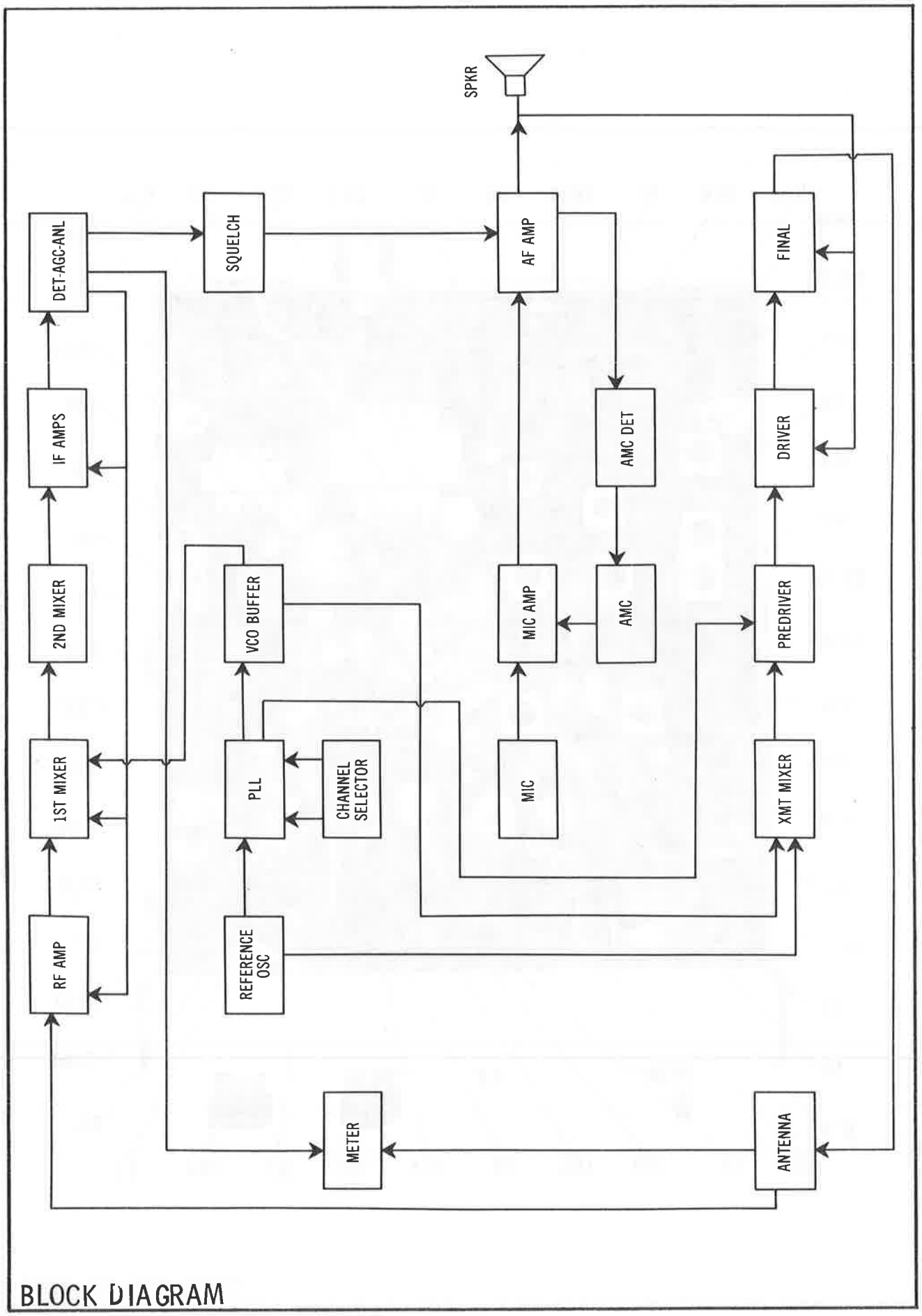

BLOCK DIAGRAM

A Howard W. Sams CIRCUITRACE® Photo

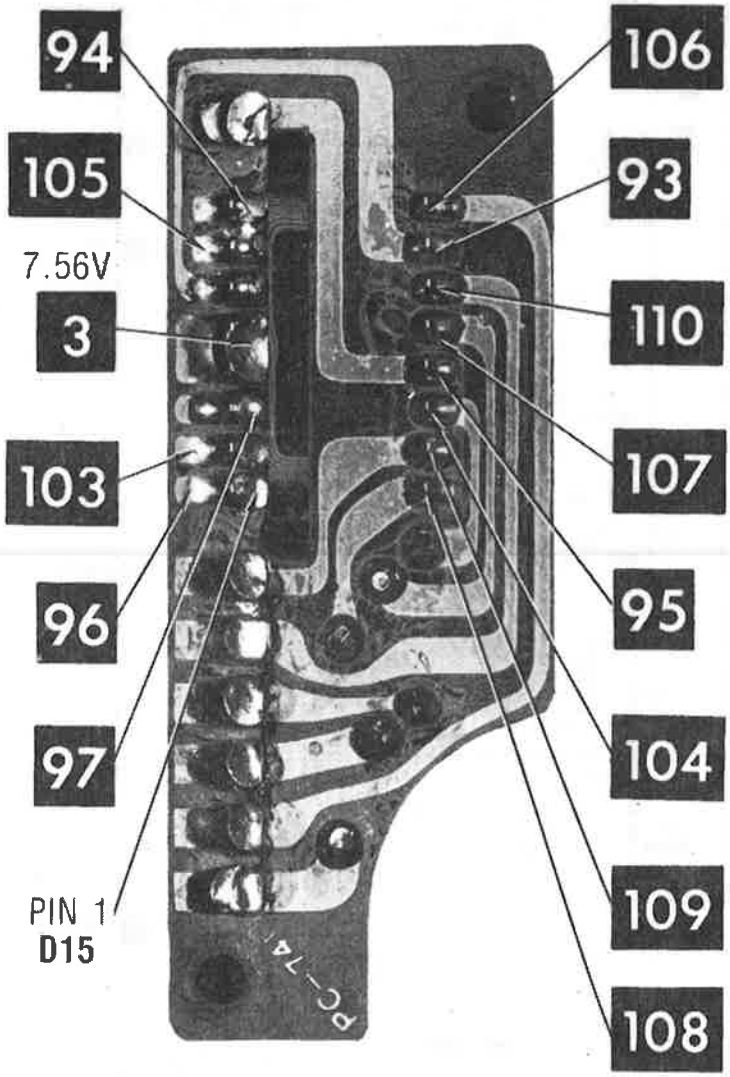

CHANNEL READOUT BOARD

A Howard W. Sams CIRCUITRACE® Photo

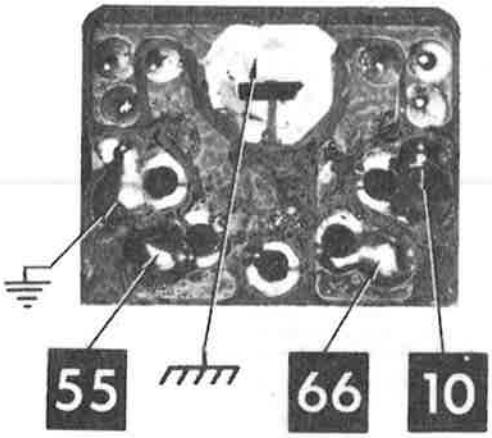

MIC CONNECTOR BOARD

PARTS LIST AND DESCRIPTION

(When ordering parts, state Model, Part Number, and Description.)

WIRING DATA

Cable (Speaker)(Unshielded).....	Use BELDEN No. 8782 (AWG24)(4 colors)
Shielding Strap.....	Use BELDEN No. 8660 (3/16" width)
Hook-up Wire (General Use).....	Use BELDEN No. 8524 (AWG22)(13 colors)
Hook-up Wire (Shielded).....	Use BELDEN No. 8401 (Braided Shield)(1 conductor)(AWG25)
	Use BELDEN No. 8421 (Spiral Shield)(1 conductor)(AWG25)
	Use BELDEN No. 8737 (Spiral Shield)(2 conductor)(AWG22)
Microphone Cable (Coiled).....	Use BELDEN No. 8497 (3 conductor-1 shielded)(6 ft.)(AWG22)
Microphone Cable (Coiled).....	Use BELDEN No. 9466 (3 conductor-1 shielded)(6 ft.)(AWG28)
Microphone Cable (Coiled).....	Use BELDEN No. 9468 (3 conductor-1 shielded)(6 ft.)(AWG31)

SEMICONDUCTORS (Select replacement transistor for best results)

ITEM No.	TYPE No.	MFGR. PART No.	REPLACEMENT DATA							
			GENERAL ELECTRIC PART No.	MALLORY PART No.	RAYTHEON PART No.	RCA PART No.	SYLVANIA PART No.	THORDARSON PART No.	WORKMAN PART No.	ZENITH PART No.
D1	1S2075K		GE-300	PTC214	REN 177	SK3175/177	ECG177	TM177	WEP1062/177	103-131
D2	1S2075K		GE-300	PTC214	REN 177	SK3175/177	ECG177	TM177	WEP1062/177	103-131
D3	1S2075K		GE-300	PTC214	REN 177	SK3175/177	ECG177	TM177	WEP1062/177	103-131
D4	1N60AM		1N60	PTC206	REN 109	SK3088	ECG109	TM109/**	WEP134/109	103-Z9001
D5	1N60AM		1N60	PTC206	REN 109	SK3088	ECG109	TM109/**	WEP134/109	103-Z9001
D6	1S2076A		GE-514	PTC214	REN 177	SK3100/519	ECG519	TM519	WEP925/519	103-131
D7	1S2075K		GE-300	PTC214	REN 177	SK3175/177	ECG177	TM177	WEP1062/177	103-131
D8	1S2075K		GE-300	PTC214	REN 177	SK3175/177	ECG177	TM177	WEP1062/177	103-131
D9	1S2075K		GE-300	PTC214	REN 177	SK3175/177	ECG177	TM177	WEP1062/177	103-131
D10	1N4003		GE-504A	1N4003	REN 116	SK3312	ECG116	TM116	WEP156	212-76-02

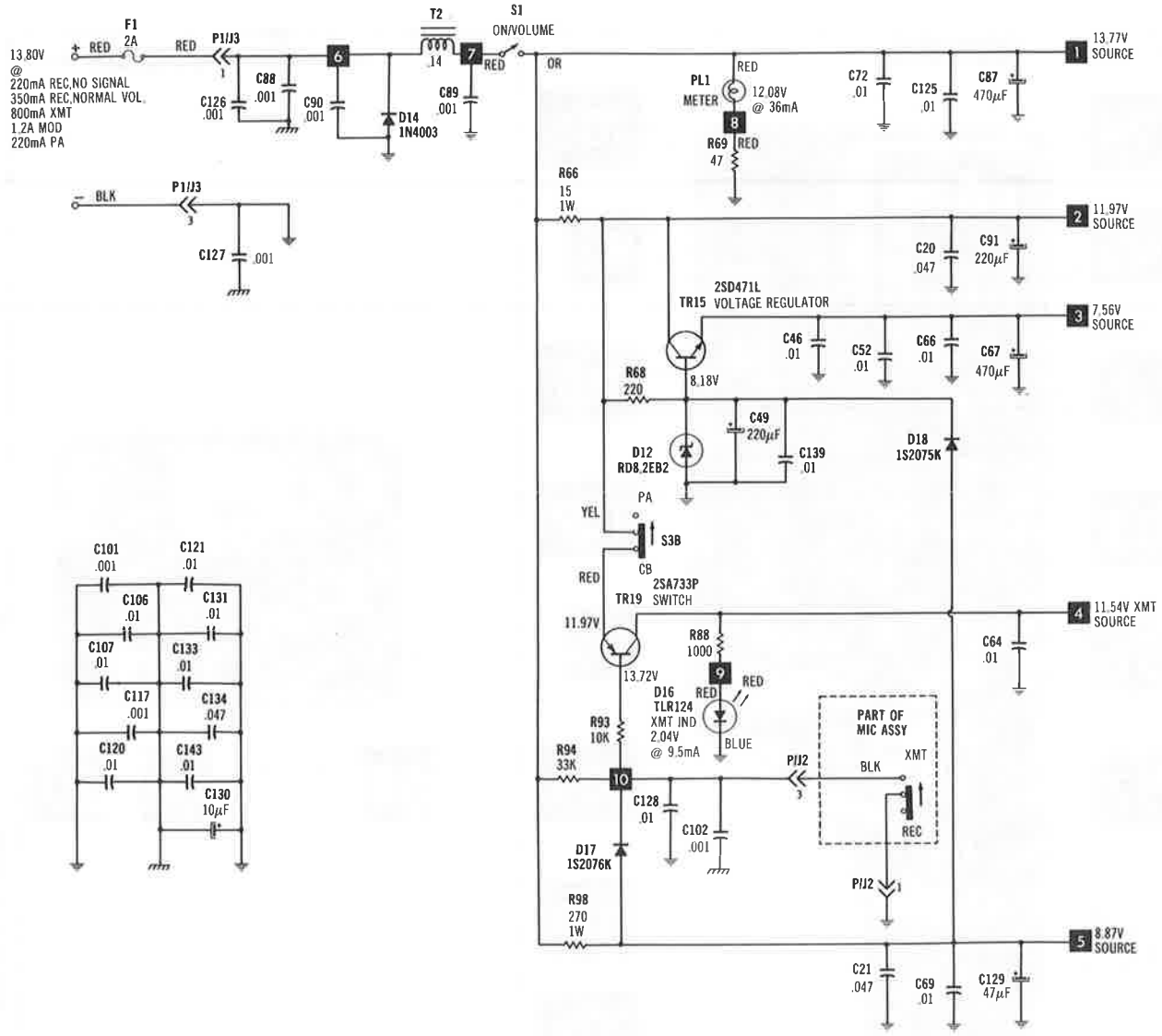

TERMINAL GUIDES

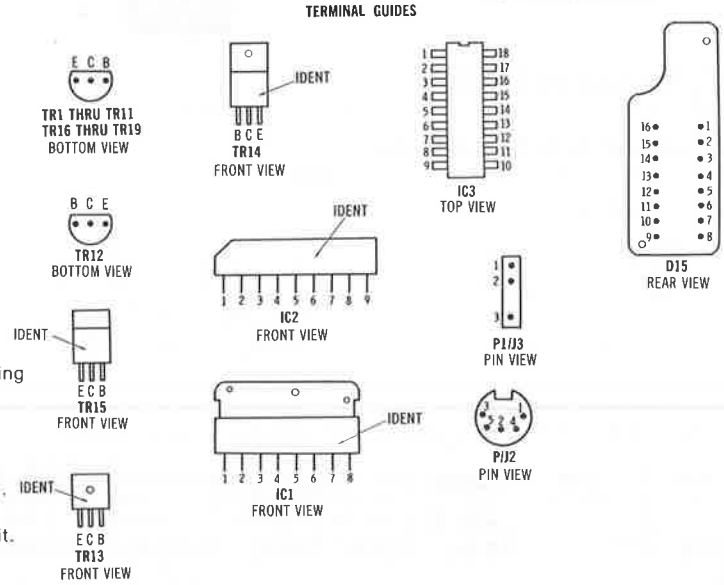

—✕— Circuitry not used in some versions.
- - - Circuitry used in some versions.
※ Nominal value
⏚ Ground
Chassis
⊖ See parts list
▽ Common tie point
Signal path
Voltage path

Measurements made in Channel 19 with switching in receive unless noted.
Item numbers in rectangles appear in the alignment/adjustment instructions.
Supply voltage maintained as shown at input.
Voltages measured with digital meter, no signal.
Controls adjusted for normal operation.
Terminal identification may not be found on unit.
Resistors are 1/2W or less, 5% unless noted.
Value in ( ) used in some versions.
Arrow head(s) at coils and transformers indicates accessibility of tuning slug(s).

A PHOTOFACT STANDARD NOTATION SCHEMATIC
WITH CIRCUITRACE™

POWER SUPPLY SCHEMATIC

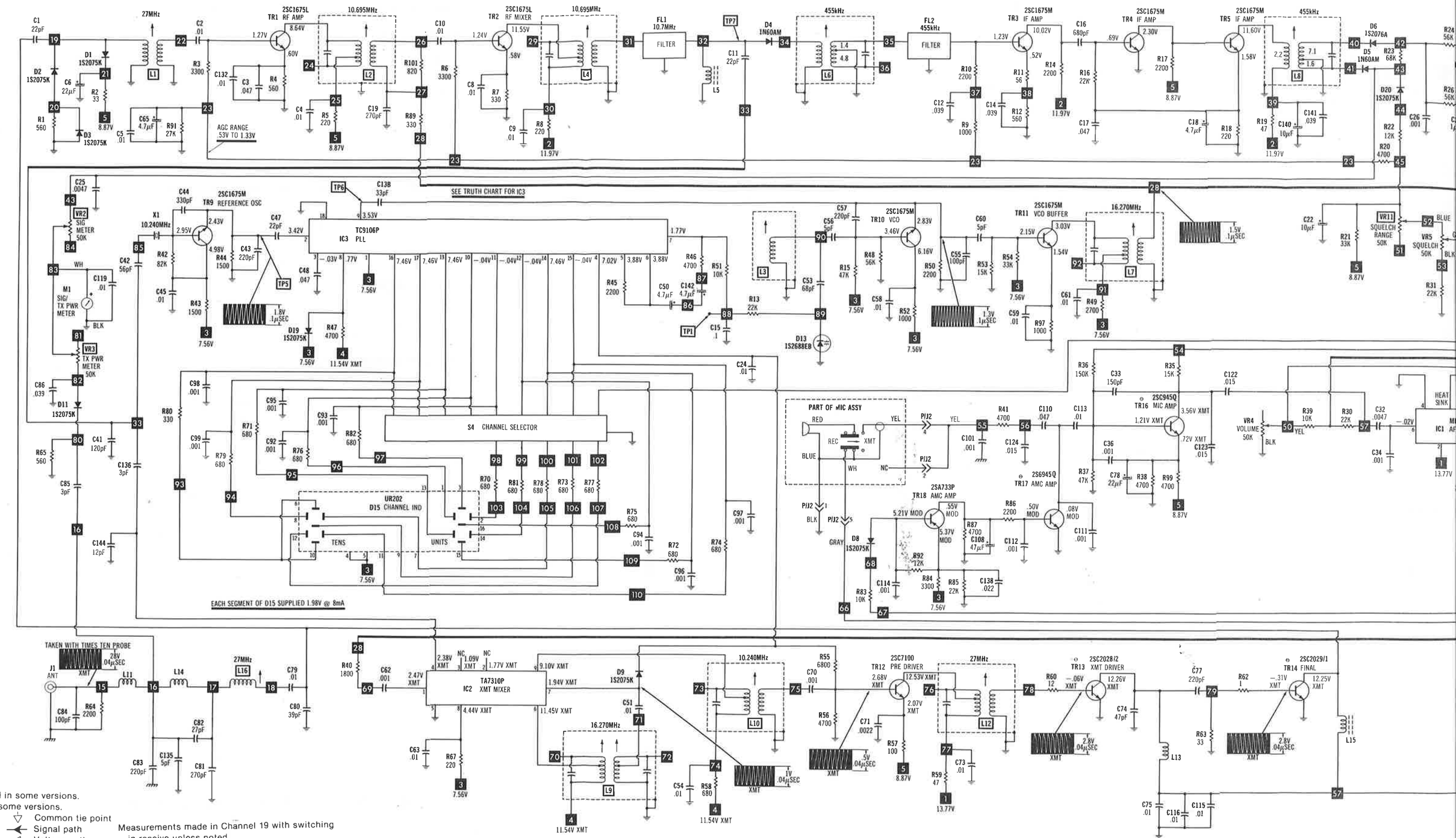

- Circuitry not used in some versions.
- Circuitry used in some versions.
- Nominal value
- Ground
- Chassis
- See parts list
- Common tie point
- Signal path
- Voltage path

A PHOTOFACT STANDARD NOTATION SCHEMATIC WITH CIRCUITRACE™

Measurements made in Channel 19 with switching in receive unless noted.
Item numbers in rectangles appear in the alignment/adjustment instructions.
Supply voltage maintained as shown at input.
Voltages measured with digital meter, no signal.
Controls adjusted for normal operation.

Terminal identification may not be found on unit.
Resistors are 1/2W or less, 5% unless noted.
Value in ( ) used in some versions.
Arrow head(s) at coils and transformers indicates accessibility of tuning slug(s).

MAIN SCHEMATIC

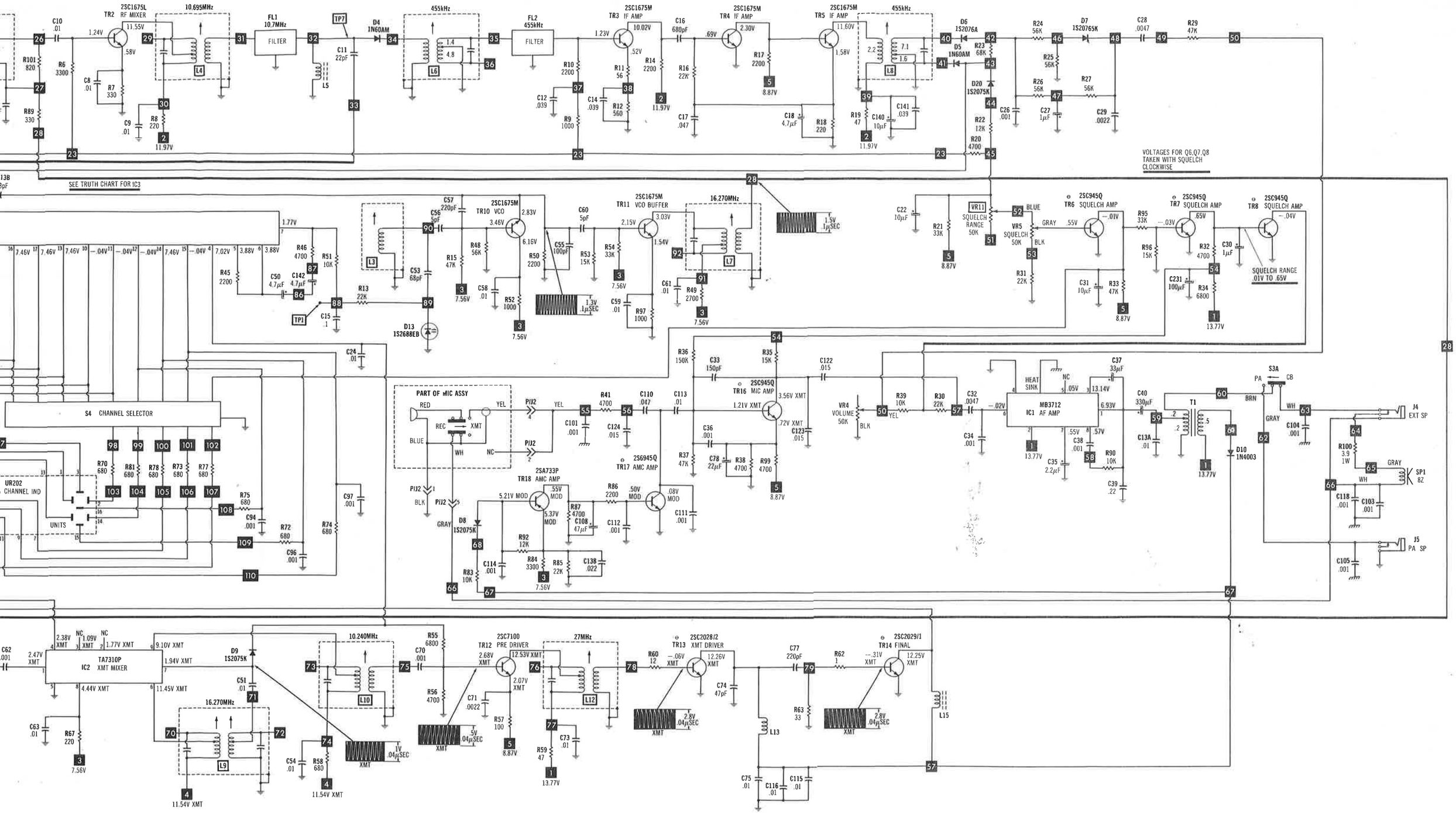

al identification may not be found on unit.
rs are 1/2W or less, 5% unless noted.
n ( ) used in some versions.
head(s) at coils and transformers
ates accessibility of tuning slug(s).

MAIN SCHEMATIC

PARTS LIST AND DESCRIPTION (CONTINUED)

(When ordering parts, state Model, Part Number, and Description.)

SEMICONDUCTORS (Select replacement transistor for best results) (cont)

ITEM No.	TYPE No.	MFGR. PART No.	REPLACEMENT DATA							
			GENERAL ELECTRIC PART No.	MALLORY PART No.	RAYTHEON PART No.	RCA PART No.	SYLVANIA PART No.	THORDARSON PART No.	WORKMAN PART No.	ZENITH PART No.
D11	1S2075K		GE-300	PTC214	REN 177	SK3175/177	ECG177	TM177	WEP1062/177	103-131
D12	RD8.2EB2			ZM8.2B		SK3782/5016A	ECG5016A	TM5016	WEP1417/5016	103-Z9019
D13	1S2688EB				REN 612	SK3325/612	ECG612	TM612		103-176
D14	1N4003		GE-504A	1N4003	REN 116	SK3312	ECG116	TM116	WEP156	212-76-02
D17	1S2075K		GE-300	PTC214	REN 177	SK3175/177	ECG177	TM177	WEP1062/177	103-131
D18	1S2075K		GE-300	PTC214	REN 177	SK3175/177	ECG177	TM177	WEP1062/177	103-131
D19	1S2075K		GE-300	PTC214	REN 177	SK3175/177	ECG177	TM177	WEP1062/177	103-131
D20	1S2075K		GE-300	PTC214	REN 177	SK3175/177	ECG177	TM177	WEP1062/177	103-131
IC1	MB3712									
IC2	TA7310P				REN 1192	SK3445/1192	ECG1192	TM1192	WEP2120/1192	221-Z9061
IC3	TC9106P					SK3830				
TR1	2SC1675L		GE-213	PTC132*	REN 229*	SK3122	ECG229*	TM229*	WEP773	121-Z9021*
TR2	2SC1675L		GE-213	PTC132*	REN 229*	SK3122	ECG229*	TM229*	WEP773	121-Z9021*
TR3	2SC1675M		GE-213	PTC132*	REN 229*	SK3122	ECG229*	TM229*	WEP773	121-Z9021*
TR4	2SC1675M		GE-213	PTC132*	REN 229*	SK3122	ECG229*	TM229*	WEP773	121-Z9021*
TR5	2SC1675M		GE-213	PTC132*	REN 229*	SK3122	ECG229*	TM229*	WEP773	121-Z9021*
TR6	2SC945Q		GE-212	PTC121*	REN 199	SK3124/289	ECG199	TM199/**	WEP1945	121-972*
	2SC945AQ		GE-212	PTC121*	REN 199	SK3124/289	ECG199	TM199/**	WEP1945	121-972*
TR7	2SC945Q		GE-212	PTC121*	REN 199	SK3124/289	ECG199	TM199/**	WEP1945	121-972*
	2SC945AQ		GE-212	PTC121*	REN 199	SK3124/289	ECG199	TM199/**	WEP1945	121-972*
TR8	2SC945Q		GE-212	PTC121*	REN 199	SK3124/289	ECG199	TM199/**	WEP1945	121-972*
	2SC945AQ		GE-212	PTC121*	REN 199	SK3124/289	ECG199	TM199/**	WEP1945	121-972*
TR9	2SC1675M		GE-213	PTC132*	REN 229*	SK3122	ECG229*	TM229*	WEP773	121-Z9021*
TR10	2SC1675M		GE-213	PTC132*	REN 229*	SK3122	ECG229*	TM229*	WEP773	121-Z9021*
TR11	2SC1675M		GE-213	PTC132*	REN 229*	SK3122	ECG229*	TM229*	WEP773	121-Z9021*
TR12	2SC710D		GE-211*	PTC132*	REN 123AP*	SK3356	ECG107*	TM107*/**	WEP710	121-Z9000A*
TR13	2SC2028/2		GE-270	PTC180	REN 295	SK3253/295	ECG295	TM295	WEP755/195A*	121-Z9066
	2SC2028B/20		GE-270	PTC180	REN 295	SK3253/295	ECG295	TM295	WEP755/195A*	121-Z9066
TR14	2SC2029/1		GE-333	PTC186	REN 235	SK3197/235	ECG235	TM235	WEP785/235	121-Z9039
	2SC2029B/10		GE-333	PTC186	REN 235	SK3197/235	ECG235	TM235	WEP785/235	121-Z9039
TR15	2SD471L		GE-47	PTC144*	REN 293	SK3849/293	ECG293	TM293	WEP912/293	121-Z9066
TR16	2SC945Q		GE-212	PTC121*	REN 199	SK3124/289	ECG199	TM199/**	WEP1945	121-972*
	2SC945AQ		GE-212	PTC121*	REN 199	SK3124/289	ECG199	TM199/**	WEP1945	121-972*
TR17	2SC945Q		GE-212	PTC121*	REN 199	SK3124/289	ECG199	TM199/**	WEP1945	121-972*
	2SC945AQ		GE-212	PTC121*	REN 199	SK3124/289	ECG199	TM199/**	WEP1945	121-972*
TR18	2SA733P		GE-48	PTC127	REN 294	SK3114/290	ECG290	TM290/**	WEP911/290	121-Z9067
TR19	2SA733P		GE-48	PTC127	REN 294	SK3114/290	ECG290	TM290/**	WEP911/290	121-Z9067

* Lead configuration may vary from original.
/** Also available as exact type replacement.

ELECTROLYTIC CAPACITORS

ITEM No.	RATING	REPLACEMENT DATA				
		MFGR. PART No.	CORNELL-DUBILIER PART No.	MALLORY PART No.	SPRAGUE PART No.	
					Q-LINE	GENERAL LINE
C6	22 10V		PC25-25	VTT22B16	QV1-55	EV-1224
C18	4.7 25V		PC5-50	VTT4R7B50	QV1-31	EV-1619.1
C22	10 16V		PC10-25	VTT10B25	QV1-41	EV-1222
C23	100 10V		PC100-10	VTT100D10	QV1-93	EV-1131
C27	1 50V		PC1-50	VTT1A50	QV1-11	EV-1615
C30	1 50V		PC1-50	VTT1A50	QV1-11	EV-1615
C31	10 16V		PC10-25	VTT10B25	QV1-41	EV-1222
C35	2.2 35V			TDC225M035FL	QDT1-37	SD35-2R29
C37	33 16V		PC30-25	VTT33D25	QV1-63	EV-1325
C40	330 10V		WBR300-35*	VTT330H16	QV1-133	EV-1245
C49	220 10V		PC250-10	VTT220F10	QV1-115	EV-1140
C50	4.7 25V		PC5-50	VTT4R7B50	QV1-31	EV-1619.1
C65	4.7 25V		PC5-50	VTT4R7B50	QV1-31	EV-1619.1
C67	470 10V		PC500-16	VTT470K16	QV1-151	EV-1251
C78	22 10V		PC25-25	VTT22B16	QV1-55	EV-1224
C87	470 16V		PC500-16	VTT470K16	QV1-151	EV-1251
C91	220 16V		PC250-25	VTT220H16	QV1-117	EV-1240
C108	47 10V		PC50-16	VTT47D16	QV1-73	EV-1226
C129	47 10V		PC50-16	VTT47D16	QV1-73	EV-1226
C130	10 16V		PC10-25	VTT10B25	QV1-41	EV-1222
C140	10 16V		PC10-25	VTT10B25	QV1-41	EV-1222
C142	4.7 25V		PC5-50	VTT4R7B50	QV1-31	EV-1619.1

* Axial replacement for radial device.

CAPACITORS

ITEM No.	RATING	MFGR. PART No.	REPLACEMENT DATA			
			CORNELL-DUBILIER PART No.	MALLORY PART No.	SPRAGUE PART No.	
					Q-LINE	GENERAL LINE
C1	22 N220 50V			*		10TCR-Q22
C2	.01 50V			MAG5011		
C3	.047 25V			MAG2515	QC1-205	HY-735
C4	.01 50V			MAG5011		
C5	.01 50V			MAG5011		
C8	.01 50V			MAG5011		
C9	.01 50V			MAG5011		
C10	.01 50V			MAG5011		
C11	22 50V 10%		NP022	CN0422		10TCC-Q22
C12	.039 25V			GP140		5GA-S40

PARTS LIST AND DESCRIPTION (CONTINUED)

(When ordering parts, state Model, Part Number, and Description.)

CAPACITORS (cont)

ITEM No.	RATING	MFGR. PART No.	REPLACEMENT DATA			
			CORNELL-DUBILIER PART No.	MALLORY PART No.	SPRAGUE PART No.	
					Q-LINE	GENERAL LINE
C13A	.01 50V 10%			MAG5011		
C13B	33 50V 10%		NP033	CN0433	QCC2-22	10TCC-Q33
C14	.039 100V 10%			M192P3939R8		192P3939R8
C15	.1 100V 10%		DPMS2P1	EWF1A010	QF1-215	1PB-P10
C16	680 50V 10%		GP680	GP368		10TS-T68
C17	.047 100V 10%		DPMS2S47	EWF1A147	QF1-171	1PB-S47
C19	270 50V 10%					10TCC-T27
C20	.047 25V			MAG2515	QC1-205	HY-735
C21	.047 25V			MAG2515	QC1-205	HY-735
C24	.01 50V			MAG5011		
C25	.0047 50V		GP4700	GP247		5GA-D47
C26	.001 50V		GP1000	GP210	QC2-81	5GA-D10
C27	.0047 50V		GP4700	GP247		5GA-D47
C28	.0047 50V		GP4700	GP247		5GA-D47
C29	.0022 100V 10%			M192P2229R8		192P2229R8
C32	.0047 50V		GP4700	GP247		5GA-D47
C33	150 50V 10%			CN0315		10TCC-T15
C34	.001 50V		GP1000	GP210	QC2-81	5GA-D10
C36	.001 50V		GP1000	GP210	QC2-81	5GA-D10
C38	.001 50V		DPMS6D1	M192P10292	QFT2-1	1FT-D10
C39	.22 50V			MAG25022	QC1-251	HY-770
C41	120 50V 10%			CN0312		10TCC-T12
C42	56 N220 50V			*		10TCR-056
C43	200 50V 10%		GP200	GP320	QCT2-28	10TS-T20
C44	330 50V 10%		GP330	GP333	QCT2-33	10TS-T33
C45	.01 50V			MAG5011		
C46	.01 50V			MAG5011		
C47	22 50V 10%		NP022	CN0422		10TCC-Q22
C48	.047 100V 10%		DPMS2S47	EWF1A147	QF1-171	1PB-S47
C52	.01 50V			MAG5011		
C53	68 N750 50V 10%		N68	CN7468		10TCU-068
C54	.01 50V			MAG5011		
C55	100 N750 50V 10%		N100	CN7310		10TCU-T10
C56	33 N220 50V 10%			*		10TCR-033
C57	220 N750 50V 10%		N220	CN7322		10TCU-T22
C58	.01 50V			MAG5011		
C59	.01 50V			MAG5011		
C60	5 50V		NP04P7	CN0547		10TCC-V47
C61	.01 50V			MAG5011		
C62	.001 50V		GP1000	GP210	QC2-81	5GA-D10
C63	.01 50V			MAG5011		
C64	.01 50V			MAG5011		
C66	.01 50V			MAG5011		
C69	.01 50V			MAG5011		
C70	.001 50V		GP1000	GP210	QC2-81	5GA-D10
C71	.0022 50V			GP222	QC2-97	5GA-D22
C72	.01 50V			MAG5011		
C73	.01 50V			MAG5011		
C74	47 50V 10%		NP047	CN0447	QCC2-26	10TCC-Q47
C75	.01 50V			MAG5011		
C77	220 50V 10%					10TCC-T22
C79	.01 50V			MAG5011		
C80	39 50V 10%			CN0439		10TCC-Q39
C81	270 50V 10%					10TCC-T27
C82	27 50V			CN0427		10TCC-Q27
C83	220 50V 10%					10TCC-T22
C84	100 50V 10%		NP0100	CN0310		10TCC-T10
C85	3 50V		NP03P3	CN0533		10TCC-V33
C86	.039 25V			GP140		5GA-S40
C87	.001 50V		GP1000	GP210	QC2-81	5GA-D10
C88	.001 50V		GP1000	GP210	QC2-81	5GA-D10
C89	.001 50V		GP1000	GP210	QC2-81	5GA-D10
C90	.001 50V		GP1000	GP210	QC2-81	5GA-D10
C92	.001 50V		GP1000	GP210	QC2-81	5GA-D10
C93	.001 50V		GP1000	GP210	QC2-81	5GA-D10
C94	.001 50V		GP1000	GP210	QC2-81	5GA-D10
C95	.001 50V		GP1000	GP210	QC2-81	5GA-D10
C96	.001 50V		GP1000	GP210	QC2-81	5GA-D10
C97	.001 50V		GP1000	GP210	QC2-81	5GA-D10
C98	.001 50V		GP1000	GP210	QC2-81	5GA-D10
C99	.001 50V		GP1000	GP210	QC2-81	5GA-D10
C100	.001 50V		GP1000	GP210	QC2-81	5GA-D10
C101	.001 50V		GP1000	GP210	QC2-81	5GA-D10
C102	.001 50V		GP1000	GP210	QC2-81	5GA-D10
C103	.001 50V		GP1000	GP210	QC2-81	5GA-D10
C104	.001 50V		GP1000	GP210	QC2-81	5GA-D10
C105	.001 50V		GP1000	GP210	QC2-81	5GA-D10
C106	.01 50V			MAG5011		
C107	.01 50V			MAG5011		
C110	.047 100V 10%		DPMS2S47	EWF1A147	QF1-171	1PB-S47
C111	.001 50V		GP1000	GP210	QC2-81	5GA-D10
C112	.001 50V		GP1000	GP210	QC2-81	5GA-D10
C113	.01 100V 10%		WMF1S1	EWF1A110	QF1-91	1PB-S10
C114	.001 100V 10%		DPMS6D1	EWF1A210	QF1-1	1PB-D10
C115	.0047 50V		GP4700	GP247		5GA-D47
C116	.01 50V			MAG5011		
C117	.001 50V		GP1000	GP210	QC2-81	5GA-D10
C118	.001 50V		GP1000	GP210	QC2-81	5GA-D10
C119	.01 50V			MAG5011		
C120	.01 50V			MAG5011		
C121	.01 50V			MAG5011		
C122	.015 50V 10%		WMF1S15	M192P1539R8	QFT2-105	1FT-S15
C123	.015 50V 10%		WMF1S15	M192P1539R8	QFT2-105	1FT-S15
C124	.015 50V 10%		WMF1S15	M192P1539R8	QFT2-105	1FT-S15
C125	.01 50V			MAG5011		
C127						
C128	.01 50V			MAG5011		
C131	.01 50V			MAG5011		
C132	.01 50V			MAG5011		
C133	.01 50V			MAG5011		

PARTS LIST AND

(When ordering parts, state M

CAPACITORS (Co

ITEM No.	RATING
C134	.047 25V
C135	6 50V
C136	3 50V
C138	.022 50V
C139	.01 50V
C141	.039 25V
C143	.01 50V
C144	12 50V 10%
C145	15 50V
C147	6 50V 10%

*Not normally in distributo

CONTROLS (All we

ITEM No.	FUNCTION
VR1	Squelch Range
VR2	SIG Meter
VR3	RX PWR Meter
VR4	Volume/Power Switch
VR5	Squelch

FILTER CHOKE

ITEM No.	RATINGS		
	CURRENT (Measured)	DC RES.	
T2	1.2A	.14	

TRANSFORMER (

ITEM No.	IMPEDANCE	
	PRI.	SEC. 1
T1	6.25	16
		SEC 2
		30

SPEAKER

ITEM No.	TYPE	
SP1	3" PM	16 Oh

FUSE DEVICES

ITEM No.	DESCRIPTION
F1	2A Quick Acting

MISCELLANEOUS

ITEM No.	PART NAME
D15	LED
D16	LED
FL1	Filter
FL2	Filter
J1	Jack
J2	Jack
J4	Jack
J5	Jack
Mic	Microphone
M1	Meter
S1	Switch
S2	Switch
S3	Switch
S4	Switch
X1	Crystal
	Printed Circuit Boar
	Power Cord

CABINETS & CABI

ITEM
Cover, Top
Cover, Bottom
Panel, Front

WORKMAN PART No.	ZENITH PART No.
WEP1062/177	103-131
WEP1417/5016	103-Z9019
	103-176
WEP156	212-76-02
WEP1062/177	103-131
WEP1062/177	103-131
WEP1062/177	103-131
WEP1062/177	103-131
WEP2120/1192	221-Z9061
WEP773	121-Z9021*
WEP773	121-Z9021*
WEP773	121-Z9021*
WEP773	121-Z9021*
WEP773	121-Z9021*
WEP1945	121-972*
WEP1945	121-972*
WEP1945	121-972*
WEP1945	121-972*
WEP1945	121-972*
WEP1945	121-972*
WEP773	121-Z9021*
WEP773	121-Z9021*
WEP773	121-Z9021*
WEP710	121-Z9000A*
WEP755/195A*	121-Z9066
WEP755/195A*	121-Z9066
WEP785/235	121-Z9039
WEP785/235	121-Z9039
WEP912/293	121-Z9066
WEP1945	121-972*
WEP1945	121-972*
WEP1945	121-972*
WEP1945	121-972*
WEP911/290	121-Z9067
WEP911/290	121-Z9067

RT No.
GENERAL LINE
EV-1224
EV-1619.1
EV-1222
EV-1131
EV-1615
EV-1615
EV-1222
SD35-2R29
EV-1325
EV-1245
EV-1140
EV-1619.1
EV-1619.1
EV-1251
EV-1224
EV-1251
EV-1240
EV-1226
EV-1226
EV-1222
EV-1222
EV-1619.1

T No.
ENERAL LINE
CR-022
735
CC-022
-S40

PARTS LIST AND DESCRIPTION (CONTINUED)

(When ordering parts, state Model, Part Number, and Description.)

CAPACITORS (cont)

ITEM No.	RATING	MFGR. PART No.	REPLACEMENT DATA			
			CORNELL-DUBILIER PART No.	MALLORY PART No.	SPRAGUE PART No.	
					Q-LINE	GENERAL LINE
C13A	.01 50V 10%			MAG5011		
C13B	33 50V 10%		NP033	CN0433	QCC2-22	10TCC-Q33
C14	.039 100V 10%			M192P3939R8		192P3939R8
C15	.1 100V 10%		DPMS2P1	EWF1A010	QF1-215	1PB-P10
C16	680 50V 10%		GP680	GP368		10TS-T68
C17	.047 100V 10%		DPMS2S47	EWF1A147	QF1-171	1PB-S47
C19	270 50V 10%					10TCC-T27
C20	.047 25V			MAG2515	QC1-205	HY-735
C21	.047 25V			MAG2515	QC1-205	HY-735
C24	.01 50V			MAG5011		
C25	.0047 50V		GP4700	GP247		5GA-D47
C26	.001 50V		GP1000	GP210	QC2-81	5GA-D10
C27	.0047 50V		GP4700	GP247		5GA-D47
C28	.0047 50V		GP4700	GP247		5GA-D47
C29	.0022 100V 10%			M192P2229R8		192P2229R8
C32	.0047 50V		GP4700	GP247		5GA-D47
C33	150 50V 10%			CN0315		10TCC-T15
C34	.001 50V		GP1000	GP210	QC2-81	5GA-D10
C36	.001 50V		GP1000	GP210	QC2-81	5GA-D10
C38	.001 50V		DPMS6D1	M192P10292	QFT2-1	1FT-D10
C39	.22 50V			MAG25022	QC1-251	HY-770
C41	120 50V 10%			CN0312		10TCC-T12
C42	56 N220 50V			*		10TCR-056
C43	200 50V 10%		GP200	GP320	QCT2-28	10TS-T20
C44	330 50V 10%		GP330	GP333	QCT2-33	10TS-T33
C45	.01 50V			MAG5011		
C46	.01 50V			MAG5011		
C47	22 50V 10%		NP022	CN0422		10TCC-022
C48	.047 100V 10%		DPMS2S47	EWF1A147	QF1-171	1PB-S47
C52	.01 50V			MAG5011		
C53	68 N750 50V 10%		N68	CN7468		10TCU-068
C54	.01 50V			MAG5011		
C55	100 N750 50V 10%		N100	CN7310		10TCU-T10
C56	33 N220 50V 10%			*		10TCR-033
C57	220 N750 50V 10%		N220	CN7322		10TCU-T22
C58	.01 50V			MAG5011		
C59	.01 50V			MAG5011		
C60	5 50V		NP04P7	CN0547		10TCC-V47
C61	.01 50V			MAG5011		
C62	.001 50V		GP1000	GP210	QC2-81	5GA-D10
C63	.01 50V			MAG5011		
C64	.01 50V			MAG5011		
C66	.01 50V			MAG5011		
C69	.01 50V			MAG5011		
C70	.001 50V		GP1000	GP210	QC2-81	5GA-D10
C71	.0022 50V			GP222	QC2-97	5GA-D22
C72	.01 50V			MAG5011		
C73	.01 50V			MAG5011		
C74	47 50V 10%		NP047	CN0447	QCC2-26	10TCC-047
C75	.01 50V			MAG5011		
C77	220 50V 10%					10TCC-T22
C79	.01 50V			MAG5011		
C80	39 50V 10%			CN0439		10TCC-039
C81	270 50V 10%					10TCC-T27
C82	27 50V			CN0427		10TCC-Q27
C83	220 50V 10%					10TCC-T22
C84	100 50V 10%		NP0100	CN0310		10TCC-T10
C85	3 50V		NP03P3	CN0533		10TCC-V33
C86	.039 25V			GP140		5GA-S40
C87	.001 50V		GP1000	GP210	QC2-81	5GA-D10
C88	.001 50V		GP1000	GP210	QC2-81	5GA-D10
C89	.001 50V		GP1000	GP210	QC2-81	5GA-D10
C90	.001 50V		GP1000	GP210	QC2-81	5GA-D10
C92	.001 50V		GP1000	GP210	QC2-81	5GA-D10
C93	.001 50V		GP1000	GP210	QC2-81	5GA-D10
C94	.001 50V		GP1000	GP210	QC2-81	5GA-D10
C95	.001 50V		GP1000	GP210	QC2-81	5GA-D10
C96	.001 50V		GP1000	GP210	QC2-81	5GA-D10
C97	.001 50V		GP1000	GP210	QC2-81	5GA-D10
C98	.001 50V		GP1000	GP210	QC2-81	5GA-D10
C99	.001 50V		GP1000	GP210	QC2-81	5GA-D10
C100	.001 50V		GP1000	GP210	QC2-81	5GA-D10
C101	.001 50V		GP1000	GP210	QC2-81	5GA-D10
C102	.001 50V		GP1000	GP210	QC2-81	5GA-D10
C103	.001 50V		GP1000	GP210	QC2-81	5GA-D10
C104	.001 50V		GP1000	GP210	QC2-81	5GA-D10
C105	.001 50V		GP1000	GP210	QC2-81	5GA-D10
C106	.01 50V			MAG5011		
C107	.01 50V			MAG5011		
C110	.047 100V 10%		DPMS2S47	EWF1A147	QF1-171	1PB-S47
C111	.001 50V		GP1000	GP210	QC2-81	5GA-D10
C112	.001 50V		GP1000	GP210	QC2-81	5GA-D10
C113	.01 100V 10%		WMF1S1	EWF1A110	QF1-91	1PB-S10
C114	.001 100V 10%		DPMS601	EWF1A210	QF1-1	1PB-D10
C115	.0047 50V		GP4700	GP247		5GA-D47
C116	.01 50V			MAG5011		
C117	.001 50V		GP1000	GP210	QC2-81	5GA-D10
C118	.001 50V		GP1000	GP210	QC2-81	5GA-D10
C119	.01 50V			MAG5011		
C120	.01 50V			MAG5011		
C121	.01 50V			MAG5011		
C122	.015 50V 10%		WMF1S15	M192P1539R8	QFT2-105	1FT-S15
C123	.015 50V 10%		WMF1S15	M192P1539R8	QFT2-105	1FT-S15
C124	.015 50V 10%		WMF1S15	M192P1539R8	QFT2-105	1FT-S15
C125	.01 50V			MAG5011		
C127						
C128	.01 50V			MAG5011		
C131	.01 50V			MAG5011		
C132	.01 50V			MAG5011		
C133	.01 50V			MAG5011		

PARTS LIST AND DESCRIPTION (CONTINUED)

(When ordering parts, state Model, Part Number, and Description.)

CAPACITORS (cont)

ITEM No.	RATING	MFGR. PART No.	REPLACEMENT DATA			
			CORNELL-DUBILIER PART No.	MALLORY PART No.	SPRAGUE PART No.	
					Q-LINE	GENERAL LINE
C134	.047 25V			MAG2515	QC1-205	HY-735
C135	5 50V		NP04P7	CN0547		10TCC-V47
C136	3 50V		NP03P3	CN0533		10TCC-V33
C138	.022 50V		DPMS2S22	M192P2239R8	QFT2-127	1FT-S22
C139	.01 50V			MAG5011		
C141	.039 25V			GP140		5GA-S40
C143	.01 50V			MAG5011		
C144	12 50V 10%			CN0412		10TCC-012
C145	15 50V		NP015	CN0415		10TCC-015
C147	6 50V 10%		NP06P8	CN0568		10TCC-V68

*Not normally in distributor's stock. Available thru distributor on order to manufacturer.

CONTROLS (All wattages 1/2 watt, or less, unless listed)

ITEM No.	FUNCTION	RESISTANCE	REPLACEMENT DATA		
			MFGR. PART No.	MALLORY PART No.	TRW PART No.
VR1	Squelch Range	50K		RVA0911H503	U260R503B
VR2	SIG Meter	50K		RVA0911H503	U260R503B
VR3	RX PWR Meter	50K		RVA0911H503	U260R503B
VR4	Volume/Power Switch	50K			
VR5	Squelch	50K			

FILTER CHOKE

ITEM No.	RATINGS			REPLACEMENT DATA			NOTES
	CURRENT (Measured)	DC RES.	INDUCTANCE (0 CURRENT 1000~)	MFGR. PART No.	THORDARSON PART No.	TRIAD PART No.	
T2	1.2A	.14	.85mH				

TRANSFORMER (Audio Output)

ITEM No.	IMPEDANCE		REPLACEMENT DATA			NOTES
	PRI.	SEC. 1	MFGR. PART No.	THORDARSON PART No.	TRIAD PART No.	
T1	6.25	16		TR507		
		SEC 2				
		30				

SPEAKER

ITEM No.	TYPE	REPLACEMENT DATA		NOTES
		MFGR. PART No.	QUAM PART No.	
SP1	3" PM 16 Ohm			

FUSE DEVICES

ITEM No.	DESCRIPTION	REPLACEMENT DATA						
		PART No.		BUSS PART No.		LITTELFUSE PART No.		WORKMAN PART No.
		DEVICE	HOLDER	DEVICE	HOLDER	DEVICE	HOLDER	DEVICE
F1	2A Quick Acting			AGC2	HRK	318002	150145	FG2-2

MISCELLANEOUS

ITEM No.	PART NAME	PART No.	NOTES
D15	LED		Channel Display (1.98V @ 8mA)
D16	LED		XMT Ind. (2.04V @ 9.5mA, Blue)
FL1	Filter		10.7MHz
FL2	Filter		455kHz
J1	Jack		Antenna
J2	Jack		Mic
J4	Jack		External Speaker
J5	Jack		PA Speaker
Mic	Microphone		
M1	Meter		
S1	Switch		On/Off (on Volume Control)
S2	Switch		ANL/Off
S3	Switch		PA/CB
S4	Switch		Channel Select
X1	Crystal		10.240MHz
	Printed Circuit Board		LED
	Power Cord		DC

CABINETS & CABINET PARTS (When ordering specify model, chassis & color)

ITEM	PART No.
Cover, Top	
Cover, Bottom	
Panel, Front	

ITEM	PART No.
Knob, Channel Select	
Knob, On-Off-Volume, Squelch	
Hanger, Microphone	

For Supplier Address See PHOTOFACT Index

NOTE

Repair or adjustment of transmitter circuits must be under supervision of a person with first-or second-class radiotelephone license.
(Refer to FCC Rules and Regulations Part 95, Subpart C & D.)

The frequency of the transmitter should be checked periodically with a secondary frequency standard to insure proper and legal operation.

Best results will be obtained when adjusting the final RF output circuit if the antenna normally used is connected and the chassis is as nearly in the cabinet as possible.

Connect either 50-ohm dummy load or the normally used antenna system.

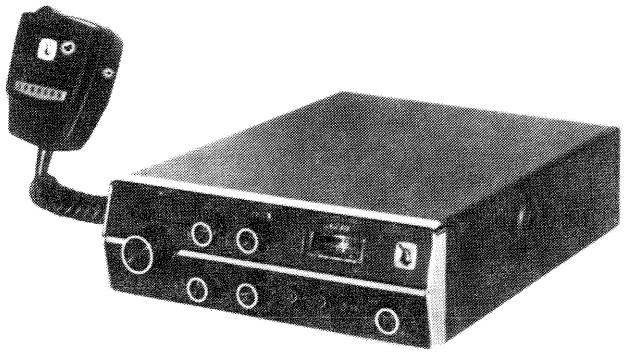

Messenger 4730

MANUFACTURER'S SPECIFICATIONS

(Measurements are made per EIA Standard RS-382 and are nominal unless otherwise stated.)

GENERAL	
Frequency Control	±0.005% crystal, -30°C to +60°C transmit and receive
Overall Dimensions	6.1 cm H x 19 cm W x 27.2 cm D (2.4 in H x 7.5 in W x 10.7 in D)
Weight -	
Unit	2.75 kg (6 lbs)
Shipping	3.20 kg (7 lbs)
Microphone	Ceramic microphone with neoprene cord
Antenna Impedance	50 ohms
Circuitry	32 transistors, 54 diodes, 2 integrated circuits
Intermediate Frequency	7.8 MHz
Metering	Received signal strength/relative power output
Power Requirements	13.8 VDC positive or negative ground 0.4A squelched receive 1.8A fully modulated transmit
Circuit Protection	4 ampere fuse
Compliance	FCC Type Accepted Rule 95 (D)
RECEIVER	
Sensitivity	
AM	10 dB (S+N)/N at 0.5 (1.0)*μV input
SSB	10 dB (S+N)/N at 0.35 (0.5)*μV input
Selectivity	4.5 kHz minimum bandwidth at -6 dB and 30 kHz maximum bandwidth at -60 dB
Spurious Rejection	50 dB
Audio Output Power	2 watts with less than 10% distortion at 1000μV, 1000 Hz
Tight Squelch	
AM	50 (30)*μV minimum and 2000μV maximum (NB on)
SSB	25 (15)*μV minimum and 1000μV maximum (NB on)
Squelch Sensitivity	3 dB or less signal change for 40 dB quieting at 1μV
AGC Characteristics	
AM	Flat within ±6 dB from 250,000 to 5μV with 15 dB ±4 rolloff from 5 to 0.5μV
SSB	Flat within +2/-8 dB from 250,000 to 5μV with 15 dB ±4 rolloff from 5 to 0.5μV
Speaker Impedance	8 ohms
Receiver Incremental Tune	±1350 maximum ±600 Hz minimum
TRANSMITTER	
Emission	
AM	6A3
SSB	3A3J
RF Power Output	
AM	3 watts minimum/4 watts maximum at 13.8 VDC
SSB	8 watts PEP minimum/12 watts PEP maximum at 13.8 VDC
RF Spurious and Harmonic Attenuation	50 dB
Audio Frequency Response	
AM	+2/-16 dB from 300 to 3000 Hz
SSB	+2/-20 dB from 300 to 3000 Hz
Modulation	80 (70%)* minimum positive and negative
Carrier Suppression	
SSB	40 dB
Unwanted Sideband Suppression	
SSB	50 dB

* MINIMUM PERFORMANCE SPECIFICATIONS are shown in parenthesis if other than NOMINAL value

Courtesy of the Manufacturer

JOHNSON MODEL MESSENGER 4730

HOWARD W. SAMS & CO., INC. Indianapolis, Indiana 46206

 80CF1100

ALIGNMENT INSTRUCTIONS

CAUTION: Use isolation transformer or observe polarity when connecting test equipment.
Maintain line voltage at 120V AC. Allow a 15-minute warm-up period.
Adjustments made with 13.8 volt DC input.
Connect low sides of test equipment to ground unless specified otherwise.
Connect 50-ohm dummy load or antenna before keying transmitter.
Connect microphone.

Suggested Alignment Tools:	GC ELECTRONICS:
T1, L3 thru L6, T401 thru T406, T501 thru T504, T601, T602, T701, T702 ...	9440
T703, T706	8728, 8728A, 9091
T704, T705	9300, 9302, 9304
C604, C616, C738	5000, 8276, 9089

SYNTHESIZER ALIGNMENT

TEST EQUIPMENT	TRANSCEIVER	ADJUST	REMARKS
Input of frequency counter to TP8 (Q8 Collector).	Ch. 19, AM Fine Tune Midrange	L5	Adjust for 10.000MHz.
Input of frequency counter to TP8 (Q8 Collector).	Ch. 19, USB Fine Tune Midrange	L6	Adjust for 9.9987MHz.
Input of frequency counter to TP8 (Q8 Collector).	Ch. 19, AM XMT	R104	Adjust for 9.99865MHz.
Input of DC meter to TP6 (Junction of R4 and R16).	Ch. 1, AM	L3	Adjust for 3.00 volts. Check for approximately 1.90 volts on channel 40.
Input of oscilloscope to TP9 (Junction of C11 and C401).	Ch. 19, AM	L4	Adjust for maximum RF (800mV p-p typical). (See Figure 1.)
Input of oscilloscope to TP7 (Junction of C24 and C25).	Ch. 19, AM	T1	Adjust for maximum RF (600mV p-p typical). (See Figure 2.)
Input of frequency counter to TP5 (Q604 Emitter).	Ch. 19, USB	T601	Adjust for 7.7975MHz.
Input of frequency counter to TP5 (Q604 Emitter).	Ch. 19, LSB	C604	Adjust for 7.8025MHz.
Input of frequency counter to TP9 (Junction of C11 and C401).	Ch. 1, AM		Check for 19.165MHz. Check all channels. (See Truth Chart for correct frequencies.)
Input of frequency counter to TP9 (Junction of C11 and C401).	Ch. 1, USB		Check for 19.1675MHz. Check all channels. (See Truth Chart for correct frequencies.)
Input of frequency counter to TP9 (Junction of C11 and C401).	Ch. 1, LSB		Check for 19.1625MHz. Check all channels. (See Truth Chart for correct frequencies.)

RECEIVER ALIGNMENT

Connect an AC VTVM or AF wattmeter across speaker voice coil.
Adjust volume control to obtain a suitable indication.
Set generator output low enough to prevent AGC limiting.
RF Gain Maximum, Squelch MINIMUM, Fine Tune Midrange, CB/PA CB, NB Off.

SSB

TEST EQUIPMENT	TRANSCEIVER	ADJUST	REMARKS
Output of signal generator thru .01uF to TP10 (Q501 Base). 7.8MHz, 1000Hz @ 30% modulation.	Ch. 19, AM	T503,T502, T501	Adjust for maximum audio output.
Output of signal generator thru .01uF to TP10 (Q501 Base). 7.8MHz, no modulation.	Ch. 19, USB	T504	Adjust for maximum audio output.
Output of signal generator to antenna input. 27.185MHz, 1000Hz @ 30% modulation.	Ch. 19, AM	T403,T402, T401	Adjust for maximum audio output. Readjust T501, T502, and T503 for maximum.

CB RECEIVER ALIGNMENT (Continued)

TEST EQUIPMENT	TRANSCEIVER	ADJUST	REMARKS
Input of oscilloscope to TP2 (CR407 Cathode). Inject a 100pps, 1uSec. pulse width signal at antenna input.	Ch. 19, AM NB On	T404,T405	Adjust for maximum pulse amplitude. (3.30 volts peak typical.) (See Figure 3.)

RECEIVER ADJUSTMENTS

Connect an AC VTVM or AF wattmeter across speaker voice coil.
Adjust volume control to obtain a suitable indication.
RF Gain Maximum, Squelch MINIMUM, Fine Tune Midrange, CB/PA CB, NB Off.

TEST EQUIPMENT	TRANSCEIVER	ADJUST	REMARKS
Input of DC meter to TP4 (Q508 Source).	Ch. 19, AM	R542	AGC Adjust for 1.70 volts.
Output of signal generator to antenna input. 27.185MHz, 1000Hz @ 30% modulation. Output 10uV.	Ch. 19, AM	R547	ROLLOFF CONTROL Adjust for 5.70 volts audio output.
Output of signal generator to antenna input. 27.185MHz, 1000Hz @ 30% modulation. Output 250uV.	Ch. 19, AM Squelch Maximum	R301	TIGHT SQUELCH (SQUELCH RANGE) Adjust so squelch just breaks.
Output of signal generator to antenna input. 27.185MHz, 1000Hz @ 30% modulation. Output 100uV.	Ch. 19, AM	R517	AM S METER Adjust for 9 on S scale of meter.
Output of signal generator to antenna input. 27.185MHz, 1000Hz @ 30% modulation. Output 100uV.	Ch. 19, USB	R528	SSB S METER Adjust for 9 on S scale of meter.

TRANSMITTER ALIGNMENT

Connect an RF wattmeter and 50-ohm, 25-watt dummy load to antenna connector.
NOTE: Be sure to check transmit frequency and power on all active channels after alignment of transmitter.
See page 4 for channel frequencies.

SSB

TEST EQUIPMENT	TRANSCEIVER	ADJUST	REMARKS
Input of RF wattmeter to antenna input. Inject a two-tone (2400Hz and 500Hz) signal at Mic input. Set output high enough for an indication on RF wattmeter.	Ch. 19, USB XMT	T406,T701, T702,C746, T703,T704, T705,T706	Adjust for maximum RF output.
Input of RF wattmeter to antenna input.	Ch. 19, AM XMT	T705	Adjust for 4.0 watts RF output maximum.
Input of spectrum analyzer or harmonic meter to antenna input.	Ch. 19, AM XMT	C738	Adjust for MINIMUM at 54MHz (2nd harmonic).

TRANSMITTER ADJUSTMENTS

Connect an RF wattmeter and 50-ohm, 25-watt dummy load to antenna connector.
NOTE: Be sure to check transmit frequency and power on all active channels after adjustment of transmitter.
See page 4 for channel frequencies.

TEST EQUIPMENT	TRANSCEIVER	ADJUST	REMARKS
Input of RF wattmeter to antenna input.	Ch. 19, USB XMT No Modulation	R609,T602, C616	CARRIER NULL Adjust for MINIMUM RF output.

TRANSMITTER ADJUSTMENTS (Continued)

TEST EQUIPMENT	TRANSCEIVER	ADJUST	REMARKS
Input of RF wattmeter to antenna input. Inject a two-tone (2400Hz and 500Hz) 20mV signal at Mic input.	Ch. 19, USB XMT	R725	ALC Adjust for 12 watts RF output maximum.
Input of RF wattmeter to antenna input. Inject a 1000Hz, 5mV signal at Mic input.	Ch. 19, AM XMT	R207	AMC Adjust for 90% modulation. (See Figure 4.)
Input of RF wattmeter to antenna input.	Ch. 19, AM XMT	R727	RF METER Adjust so RF meter agrees with RF wattmeter.

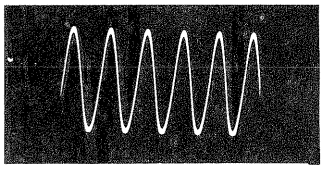
Figure 1

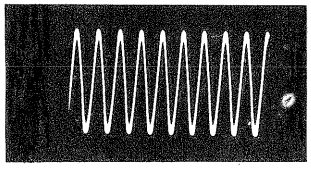
Figure 2

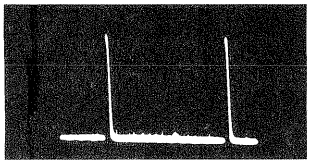
Figure 3

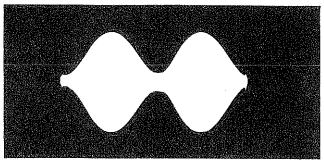
Figure 4

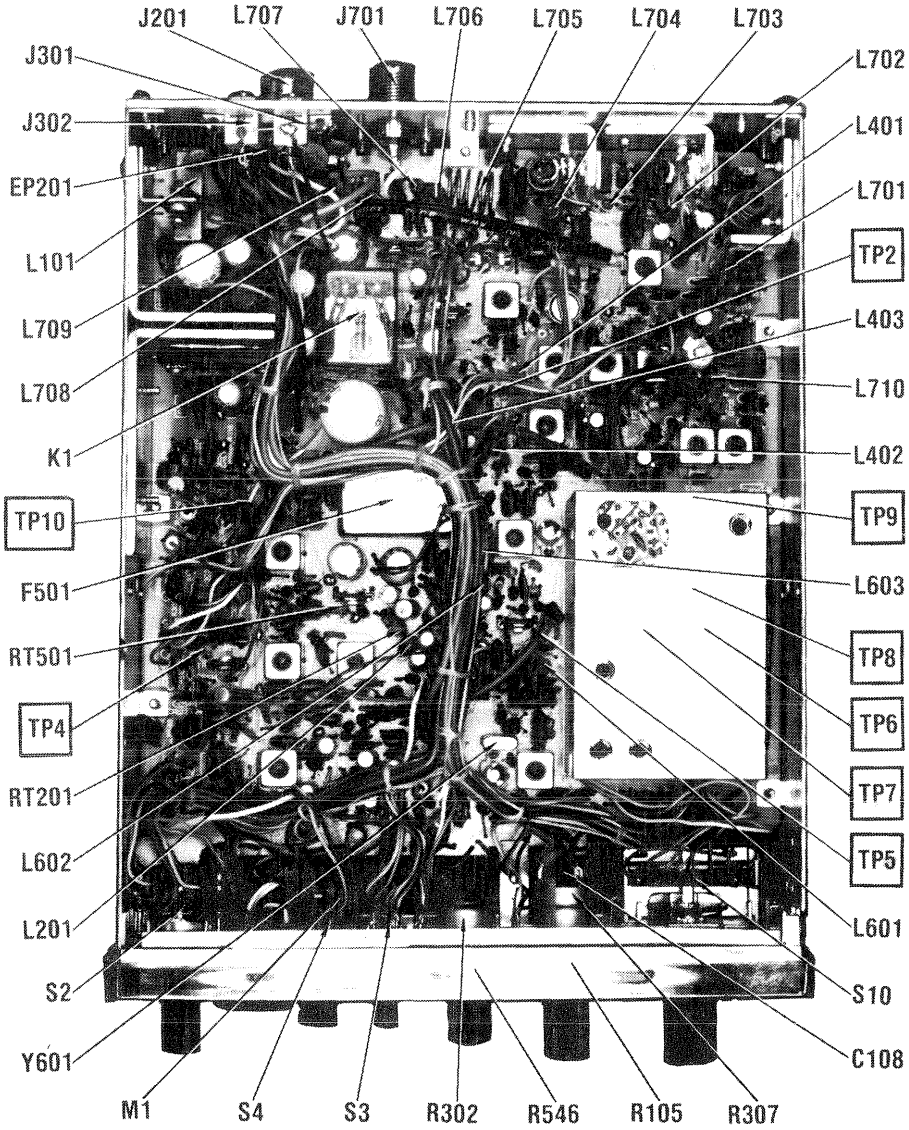

CHASSIS-BOTTOM

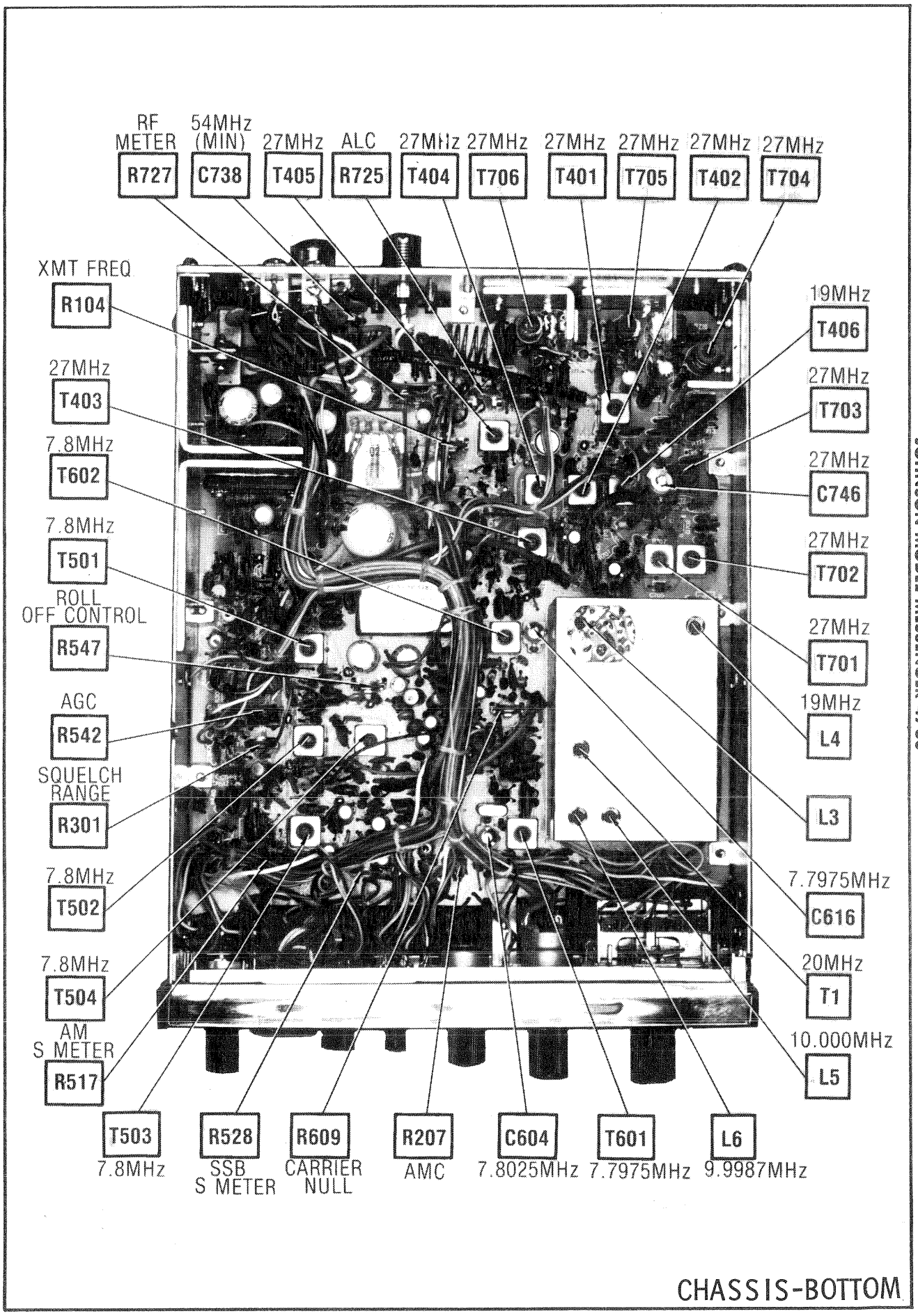

CHASSIS-BOTTOM

TRUTH CHART

CHANNEL	1 = 5.16 Volts 0 = 0 Volts CHANNEL INPUT CODES IC2 PINS 8	9	10	11	12	13	14		AM REC VCO OUTPUT IN MHz AT TP9	AM XMT & LSB REC VCO OUTPUT IN MHz AT TP9	USB REC VCO OUTPUT IN MHz AT TP9
1	1	0	1	0	0	1	1		19.165	19.1625	19.1675
2	1	0	1	0	0	1	0		19.175	19.1725	19.1775
3	1	0	1	0	0	0	1		19.185	19.1825	19.1875
4	1	0	0	1	1	1	1		19.205	19.2025	19.2075
5	1	0	0	1	1	1	0		19.215	19.2125	19.2175
6	1	0	0	1	1	0	1		19.225	19.2225	19.2275
7	1	0	0	1	1	0	0		19.235	19.2325	19.2375
8	1	0	0	1	0	1	0		19.255	19.2525	19.2575
9	1	0	0	1	0	0	1		19.265	19.2625	19.2675
10	1	0	0	1	0	0	0		19.275	19.2725	19.2775
11	1	0	0	0	1	1	1		19.285	19.2825	19.2875
12	1	0	0	0	1	0	1		19.305	19.3025	19.3075
13	1	0	0	0	1	0	0		19.315	19.3125	19.3175
14	1	0	0	0	0	1	1		19.325	19.3225	19.3275
15	1	0	0	0	0	1	0		19.335	19.3325	19.3375
16	1	0	0	0	0	0	0		19.355	19.3525	19.3575
17	0	1	1	1	1	1	1		19.365	19.3625	19.3675
18	0	1	1	1	1	1	0		19.375	19.3725	19.3775
19	0	1	1	1	1	0	1		19.385	19.3825	19.3875
20	0	1	1	1	0	1	1		19.405	19.4025	19.4075
21	0	1	1	1	0	1	0		19.415	19.4125	19.4175
22	0	1	1	1	0	0	1		19.425	19.4225	19.4275
23	0	1	1	0	1	1	0		19.455	19.4525	19.4575
24	0	1	1	1	0	0	0		19.435	19.4325	19.4375
25	0	1	1	0	1	1	1		19.445	19.4425	19.4475
26	0	1	1	0	1	0	1		19.465	19.4625	19.4675
27	0	1	1	0	1	0	0		19.475	19.4725	19.4775
28	0	1	1	0	0	1	1		19.485	19.4825	19.4875
29	0	1	1	0	0	1	0		19.495	19.4925	19.4975
30	0	1	1	0	0	0	1		19.505	19.5025	19.5075
31	0	1	1	0	0	0	0		19.515	19.5125	19.5175
32	0	1	0	1	1	1	1		19.525	19.5225	19.5275
33	0	1	0	1	1	1	0		19.535	19.5325	19.5375
34	0	1	0	1	1	0	1		19.545	19.5425	19.5475
35	0	1	0	1	1	0	0		19.555	19.5525	19.5575
36	0	1	0	1	0	1	1		19.565	19.5625	19.5675
37	0	1	0	1	0	1	0		19.575	19.5725	19.5775
38	0	1	0	1	0	0	1		19.585	19.5825	19.5875
39	0	1	0	1	0	0	0		19.595	19.5925	19.5975
40	0	1	0	0	1	1	1		19.605	19.6025	19.6075

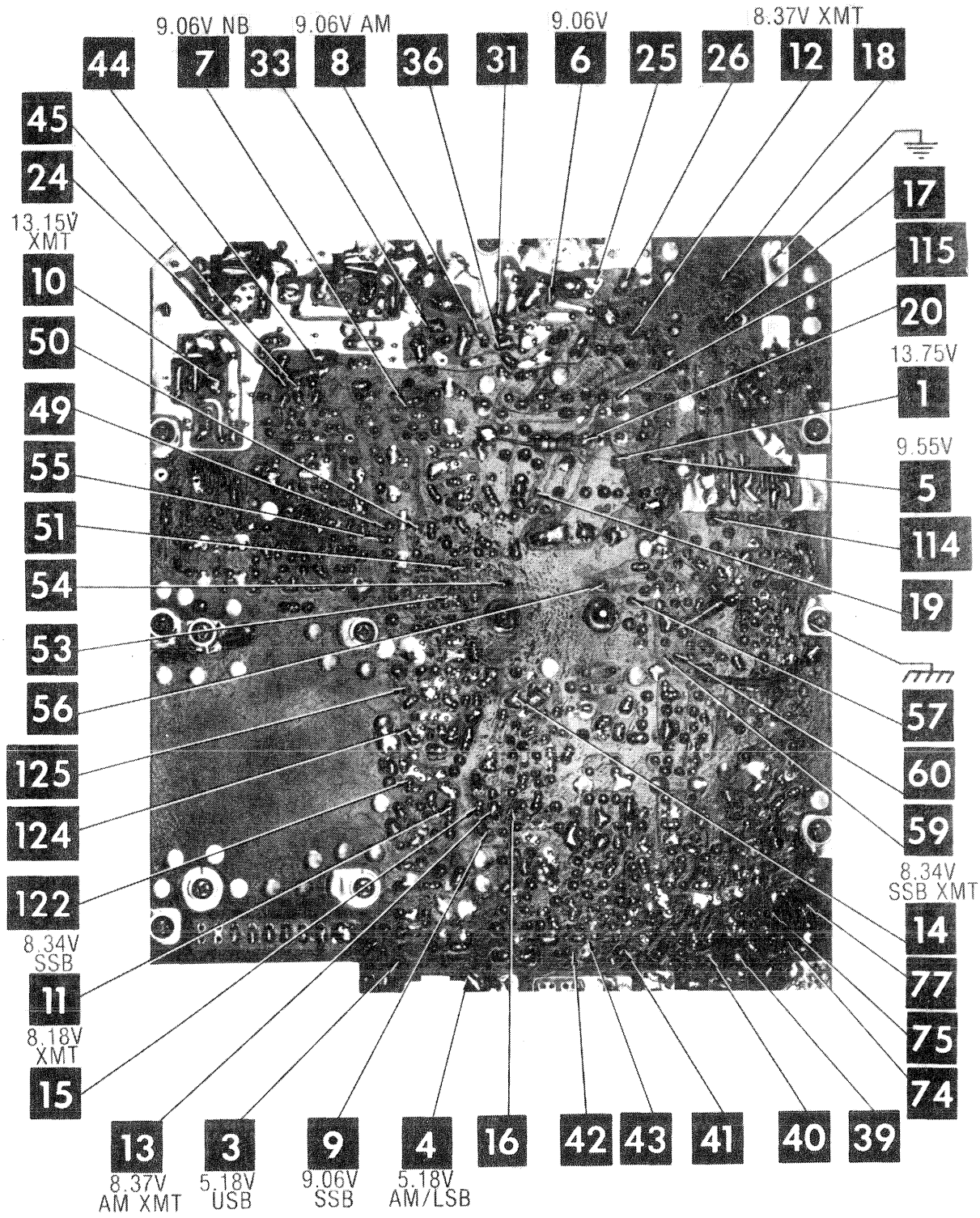
9.06V NB
9.06V AM
9.06V
8.37V XMT
44
7
33
8
36
31
6
25
26
12
18
45
24
13.15V XMT
10
50
49
55
51
54
53
56
125
124
122
8.34V SSB
11
8.18V XMT
15
17
115
20
13.75V
1
9.55V
5
114
19
57
60
59
8.34V SSB XMT
14
77
75
74
13
8.37V AM XMT
3
5.18V USB
9
9.06V SSB
4
5.18V AM/LSB
16
42
43
41
40
39

MAIN BOARD

A Howard W. Sams CIRCUITRACE® Photo

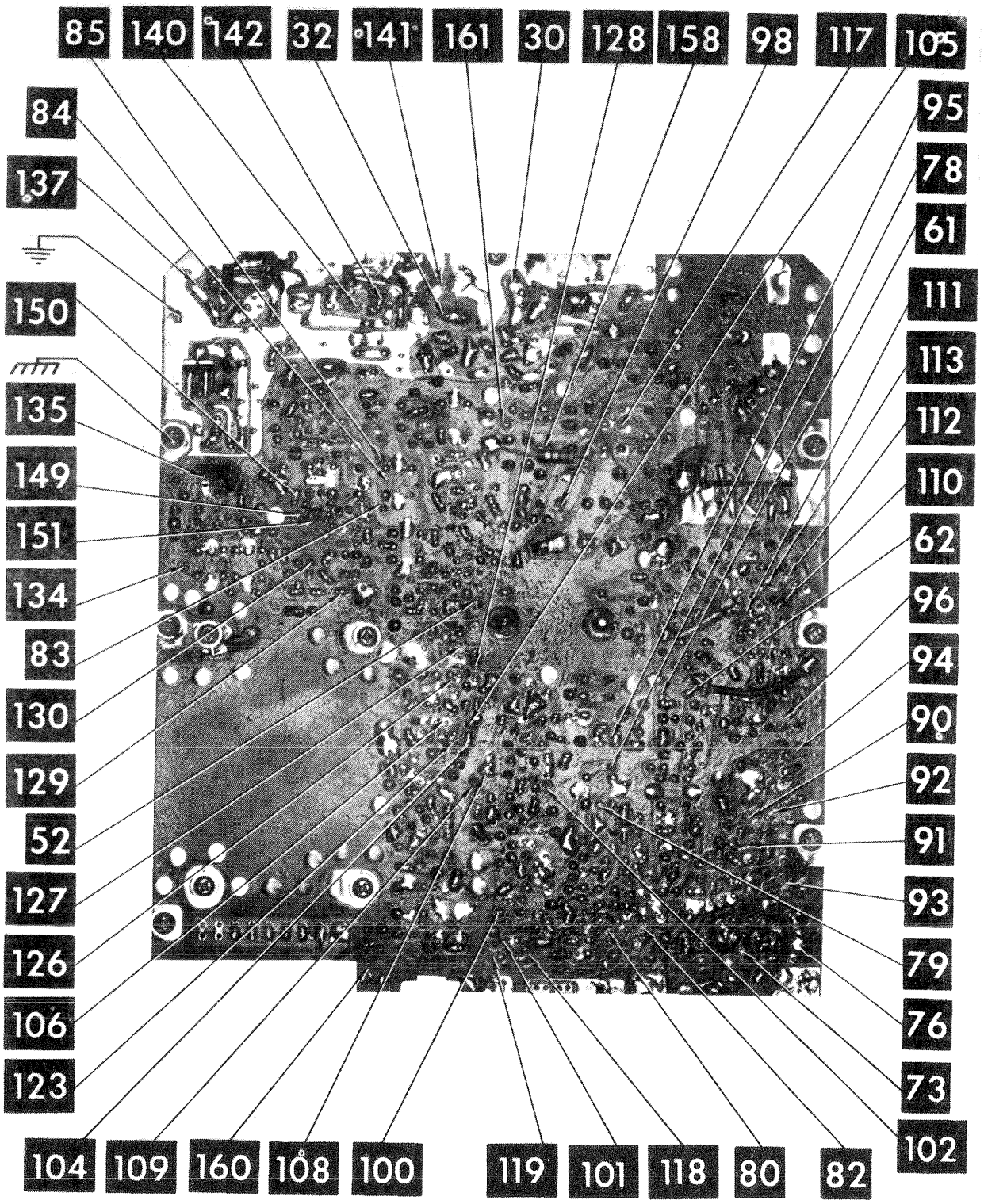

MAIN BOARD

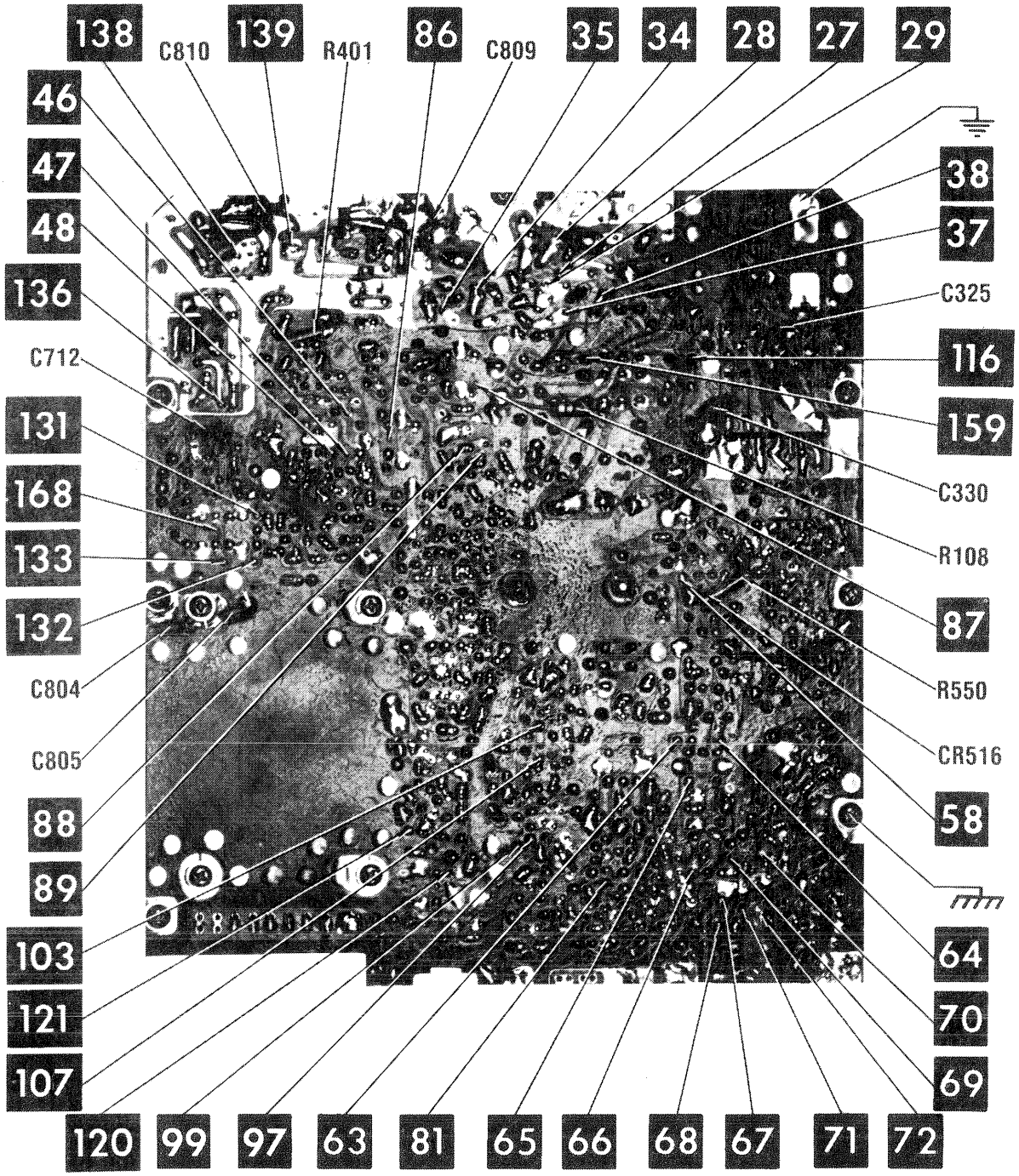

JOHNSON MODEL MESSENGER 4730

MAIN BOARD

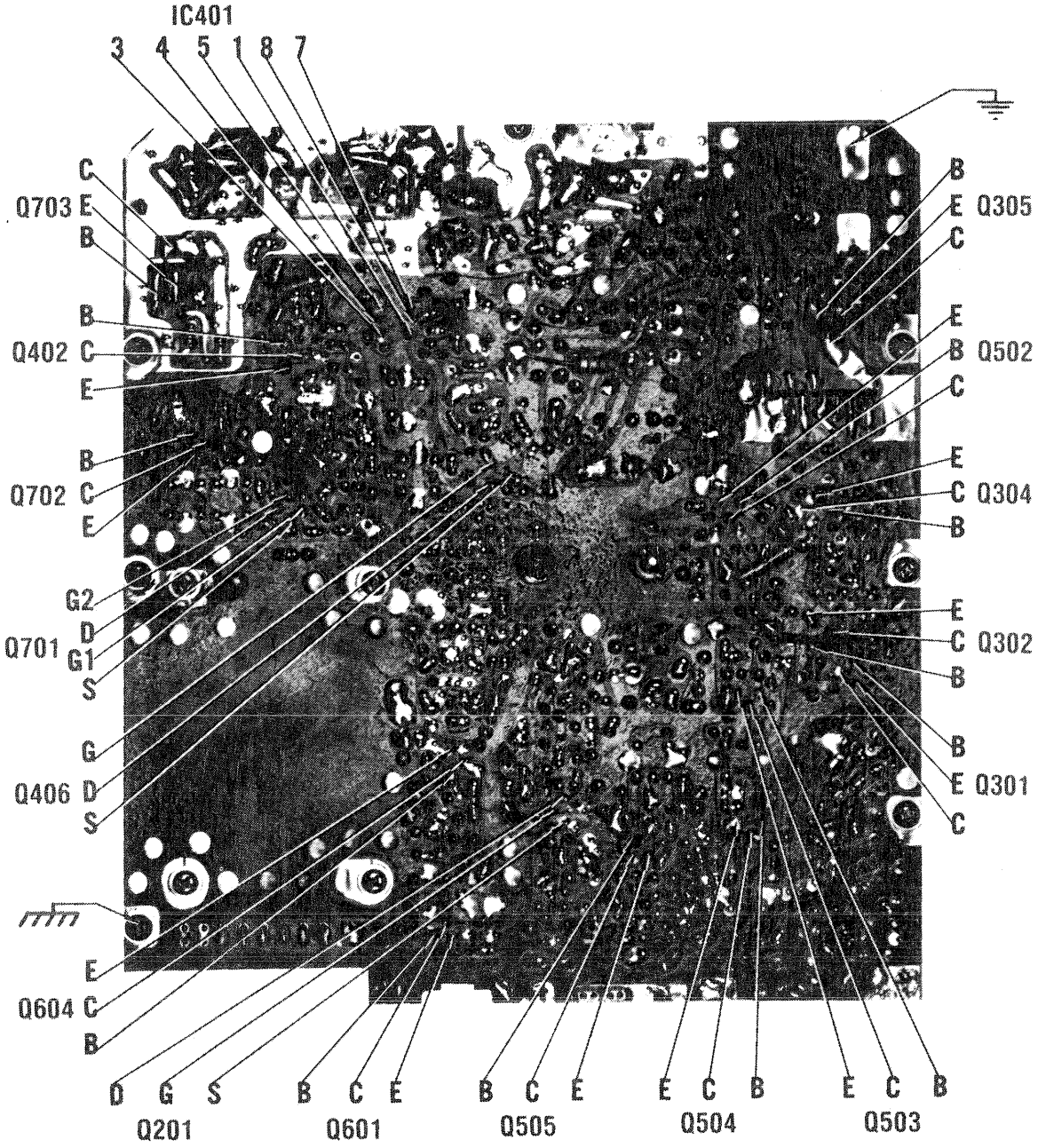
IC401
3 4 5 1 8 7
Q703 C E B
Q402 B C E
Q702 B C E
Q701 G2 D G1 S
Q406 G D S
Q604 E C B
D G S
Q201
B C E
Q601
B C E
Q505
E C B
Q504
E C B
Q503
B E C
Q302
B E C
Q304
B E C
Q502
B E C
Q305
B E C
Q301

MAIN BOARD

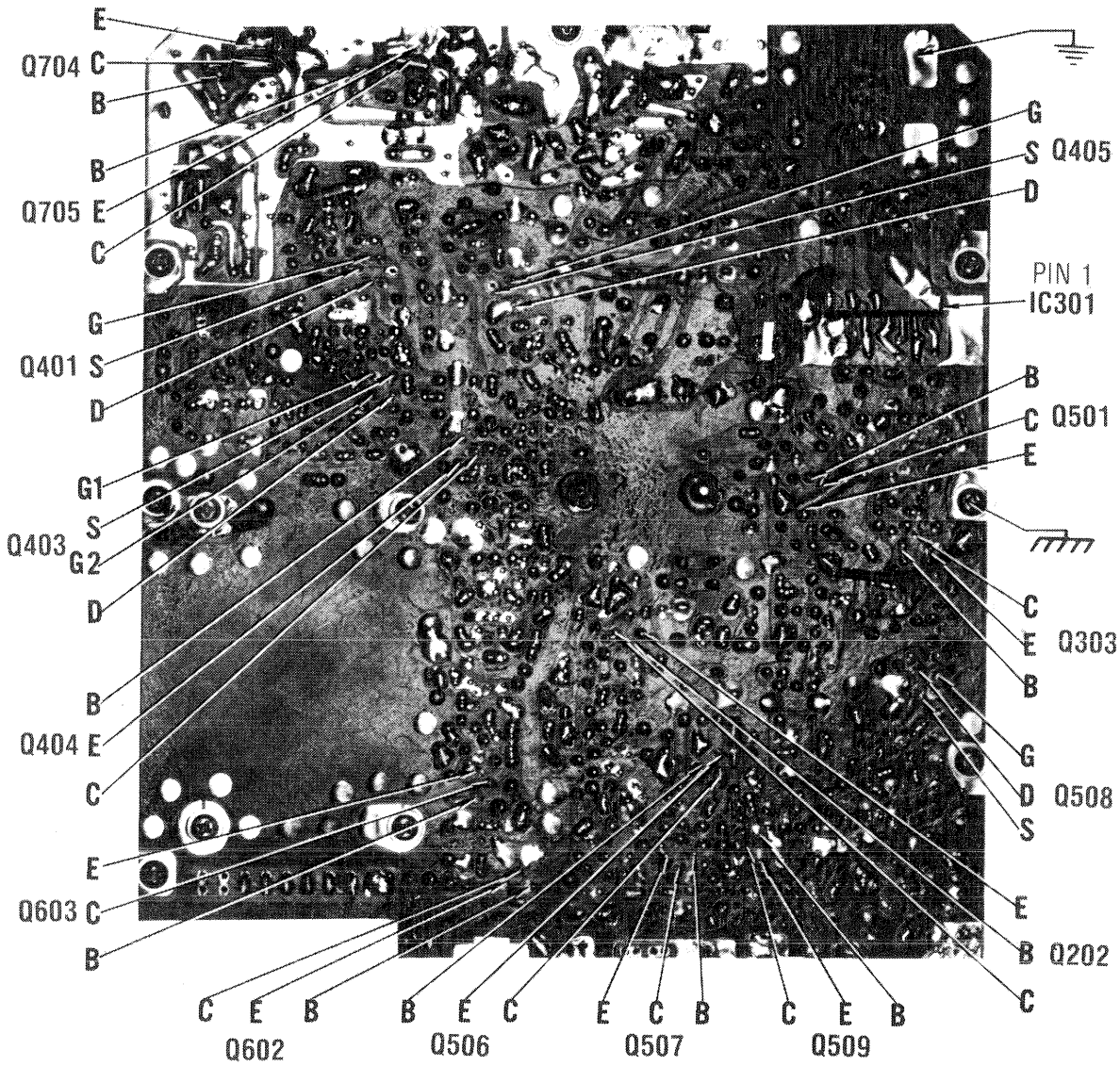
E
Q704 C
B
B
Q705 E
C
G
Q401 S
D
G1
S
Q403 G2
D
B
Q404 E
C
E
Q603 C
B
C E B
Q602
B E C
Q506
E C B
Q507
C E B
Q509
C
B Q202
E
G
S Q405
D
PIN 1
IC301
B
C Q501
E
C
E Q303
B
G
D Q508
S

MAIN BOARD

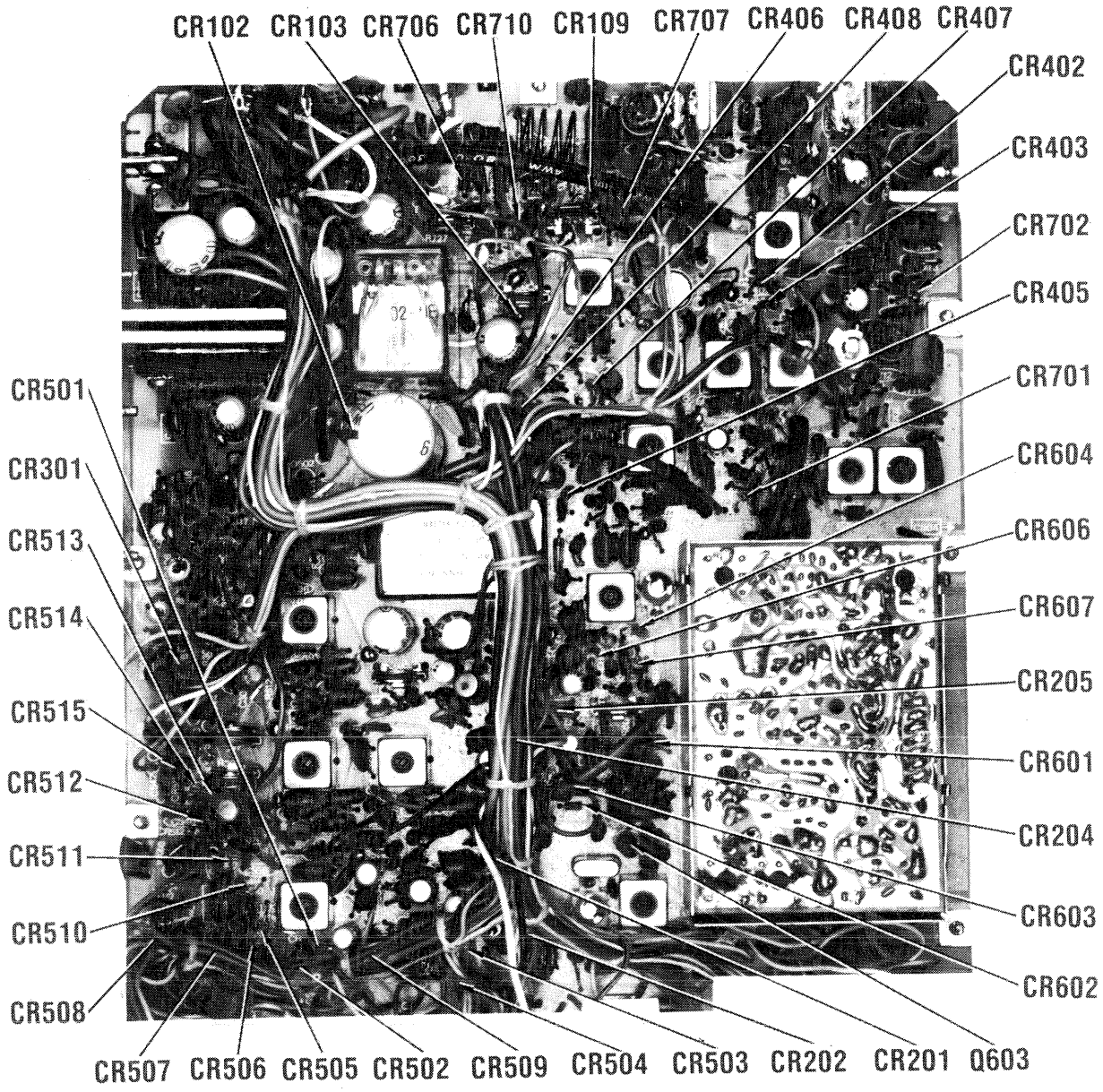
CR102
CR103
CR706
CR710
CR109
CR707
CR406
CR408
CR407
CR402
CR403
CR702
CR405
CR701
CR604
CR606
CR607
CR205
CR601
CR204
CR603
CR602
Q603
CR202
CR201
CR503
CR504
CR509
CR502
CR505
CR506
CR507
CR508
CR510
CR511
CR512
CR515
CR514
CR513
CR301
CR501

MAIN BOARD

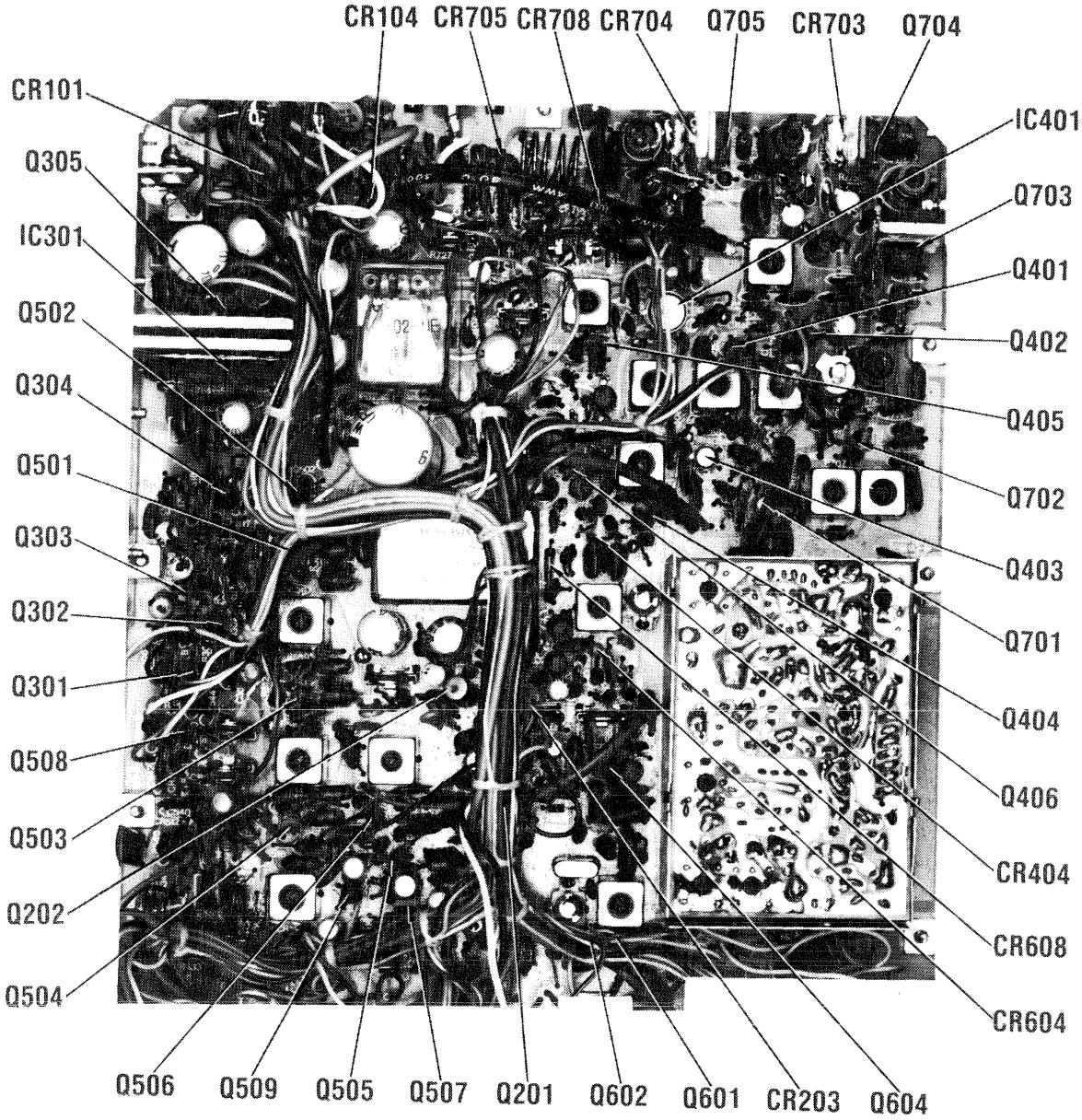
CR104
CR705
CR708
CR704
Q705
CR703
Q704
CR101
IC401
Q305
Q703
IC301
Q401
Q502
Q402
Q304
Q405
Q501
Q702
Q303
Q403
Q302
Q701
Q301
Q404
Q508
Q406
Q503
CR404
Q202
CR608
Q504
CR604
Q506
Q509
Q505
Q507
Q201
Q602
Q601
CR203
Q604

MAIN BOARD

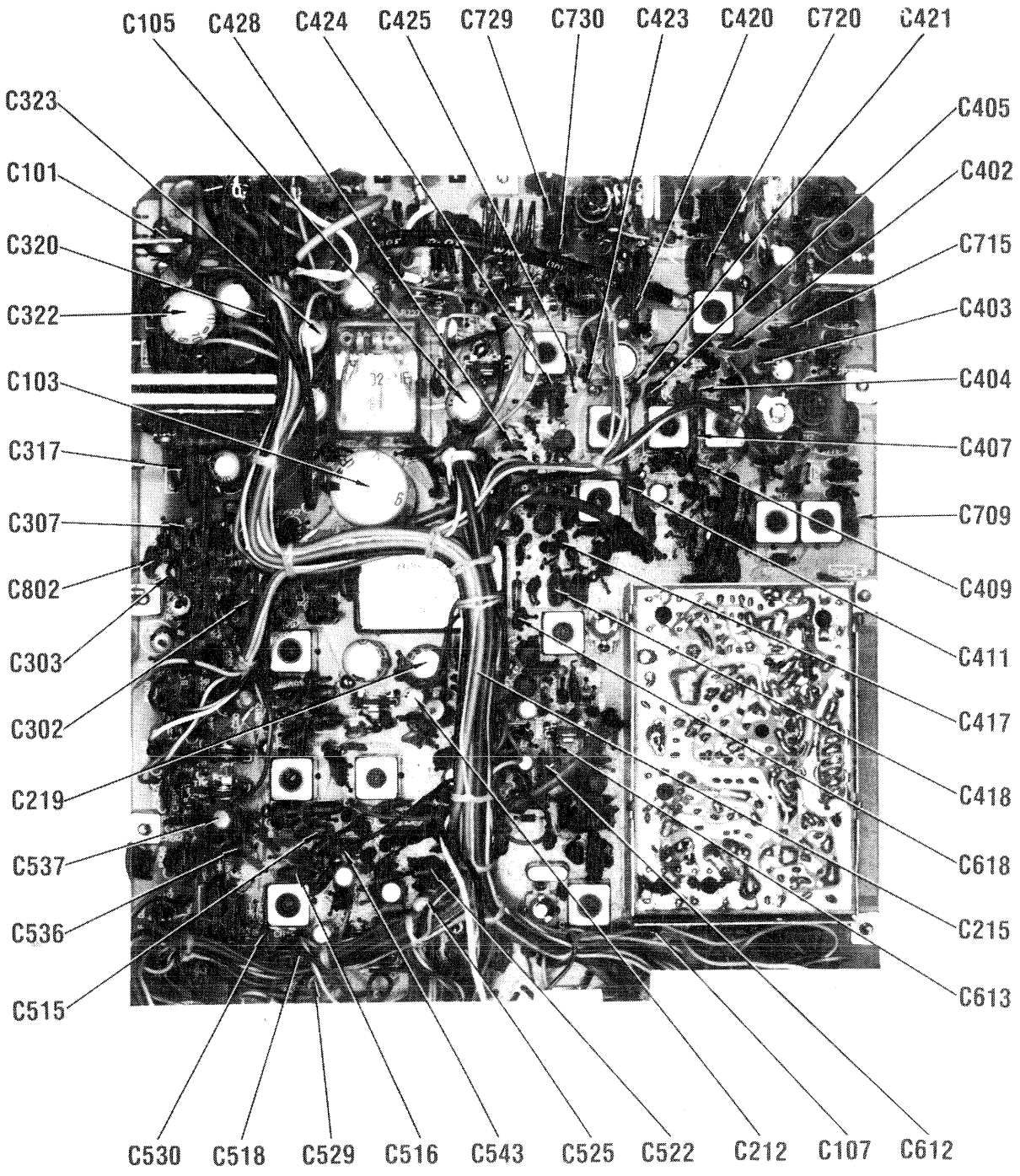
C105
C428
C424
C425
C729
C730
C423
C420
C720
C421
C323
C101
C320
C322
C103
C317
C307
C802
C303
C302
C219
C537
C536
C515
C405
C402
C715
C403
C404
C407
C709
C409
C411
C417
C418
C618
C215
C613
C530
C518
C529
C516
C543
C525
C522
C212
C107
C612

MAIN BOARD

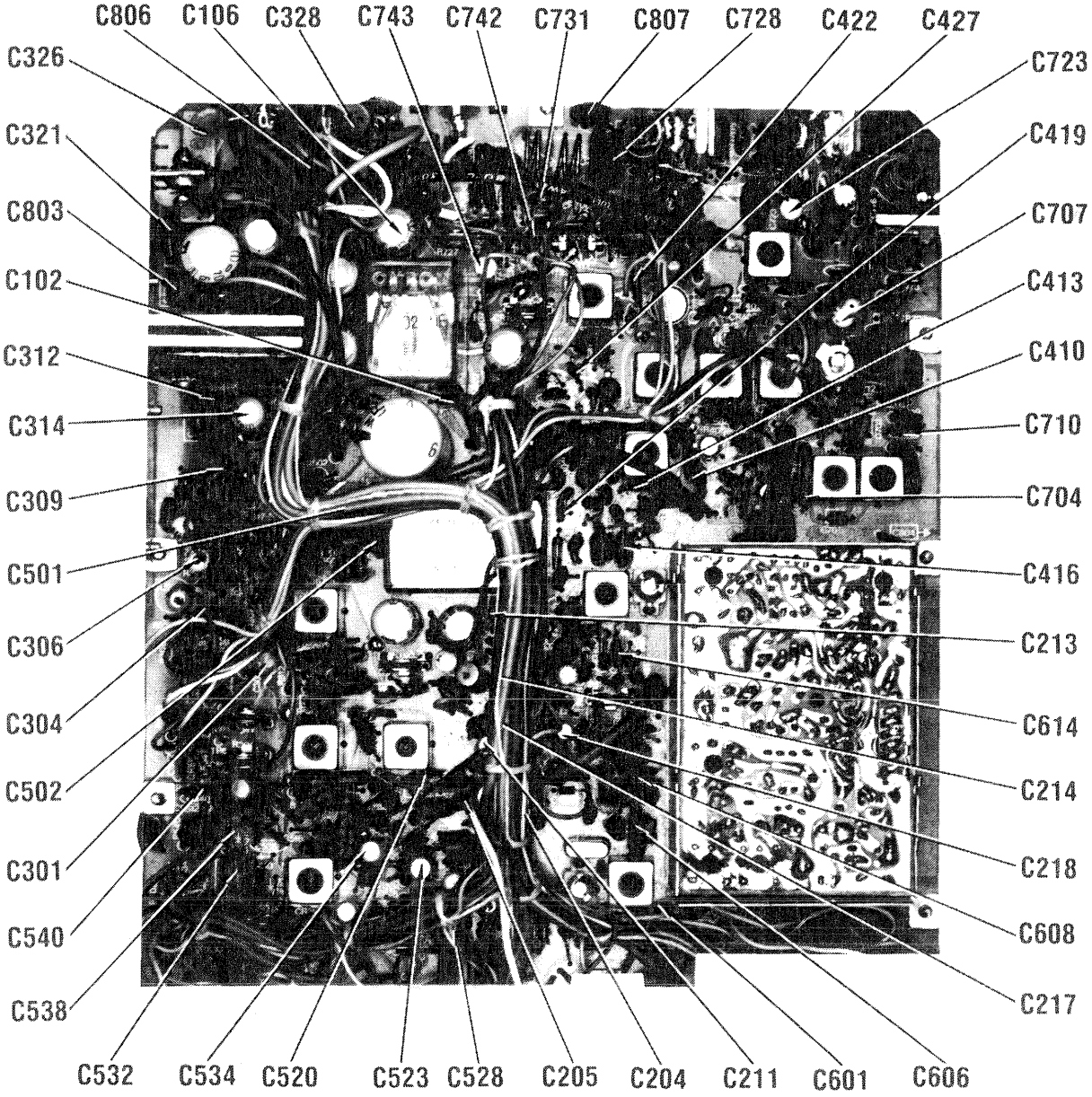
C806
C106
C328
C743
C742
C731
C807
C728
C422
C427
C326
C723
C321
C419
C803
C707
C102
C413
C312
C410
C314
C710
C309
C704
C501
C416
C306
C213
C304
C614
C502
C214
C301
C218
C540
C608
C538
C217
C532
C534
C520
C523
C528
C205
C204
C211
C601
C606

MAIN BOARD

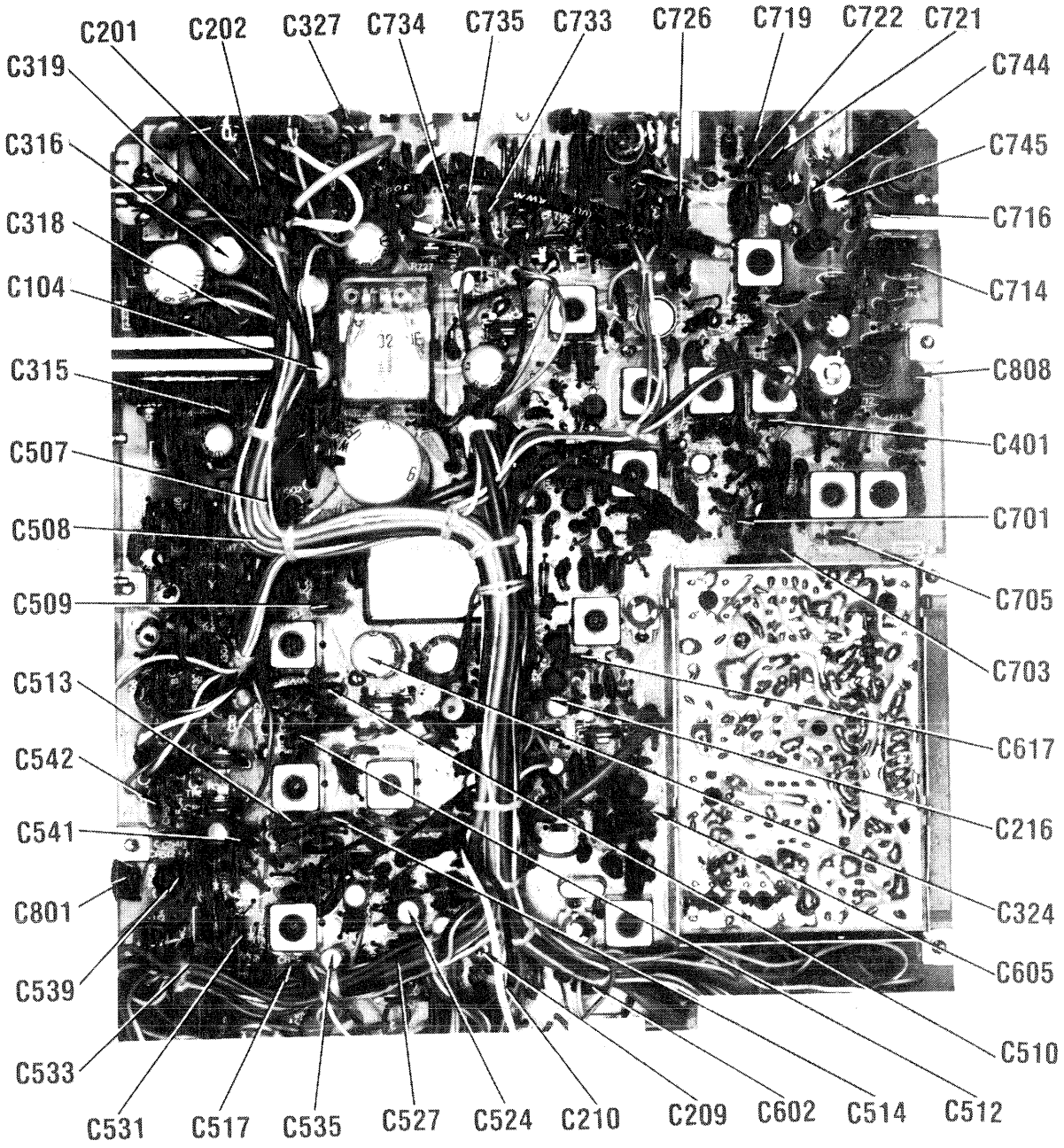
C201
C202
C327
C734
C735
C733
C726
C719
C722
C721
C319
C744
C316
C745
C318
C716
C104
C714
C315
C808
C507
C401
C508
C701
C509
C705
C703
C513
C617
C542
C216
C541
C324
C801
C605
C539
C510
C533
C531
C517
C535
C527
C524
C210
C209
C602
C514
C512

MAIN BOARD

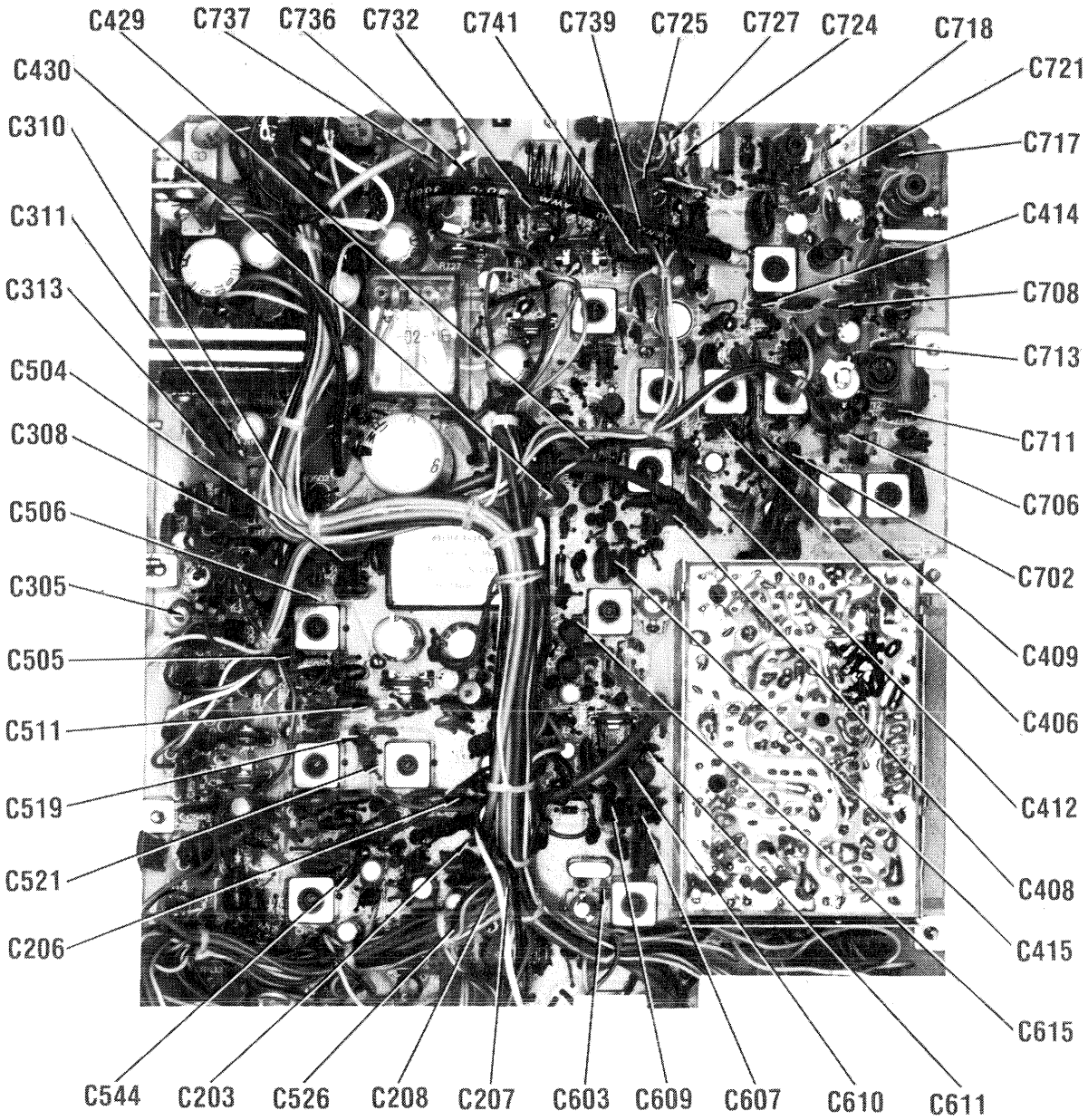
C429
C737
C736
C732
C741
C739
C725
C727
C724
C718
C430
C721
C310
C717
C311
C414
C313
C708
C504
C713
C308
C711
C506
C706
C305
C702
C505
C409
C511
C406
C519
C412
C521
C408
C206
C415
C615
C544
C203
C526
C208
C207
C603
C609
C607
C610
C611

MAIN BOARD

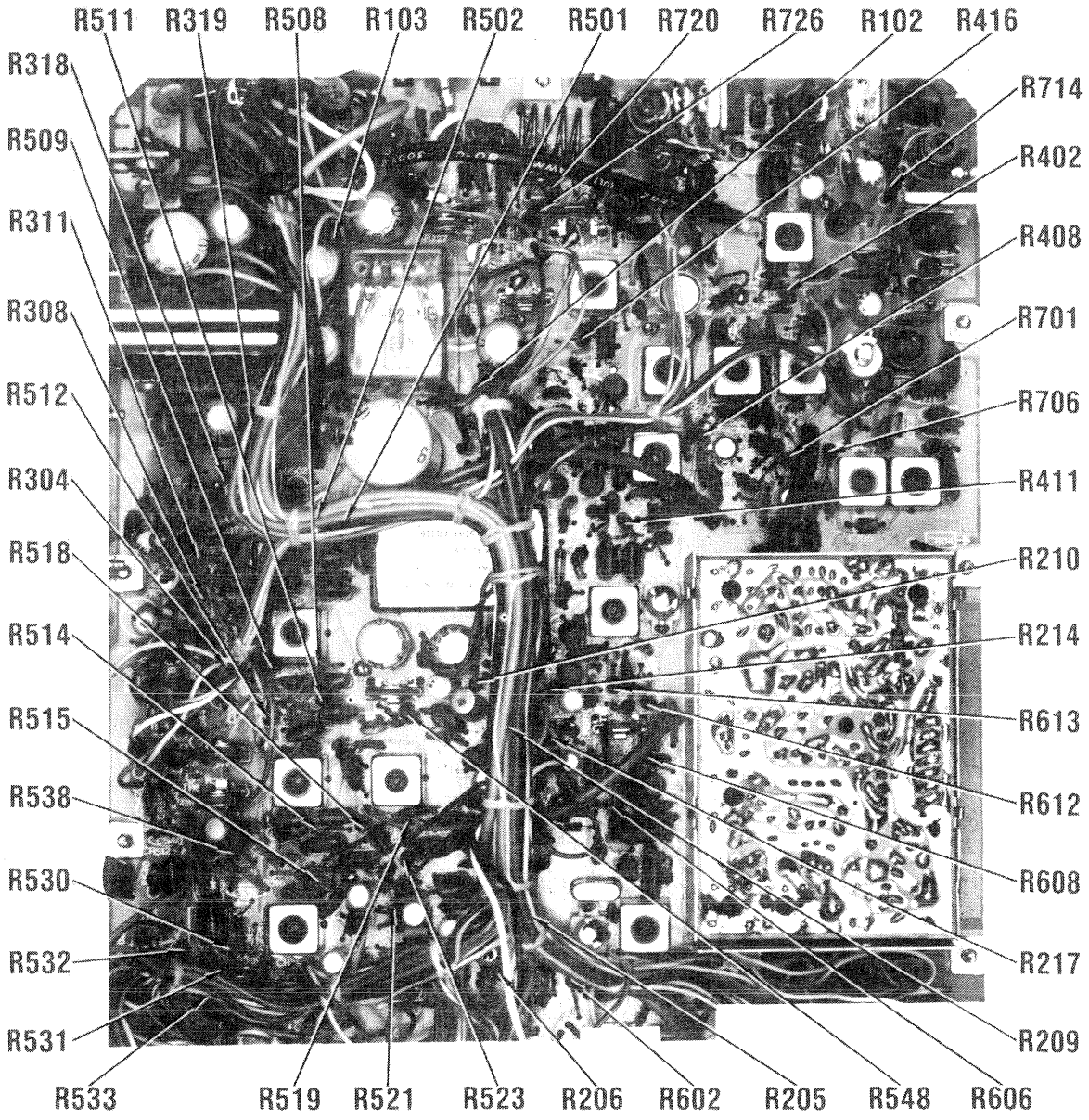
R511
R319
R508
R103
R502
R501
R720
R726
R102
R416
R318
R714
R509
R402
R311
R408
R308
R701
R512
R706
R304
R411
R518
R210
R514
R214
R515
R613
R538
R612
R530
R608
R532
R217
R531
R209
R533
R519
R521
R523
R206
R602
R205
R548
R606

MAIN BOARD

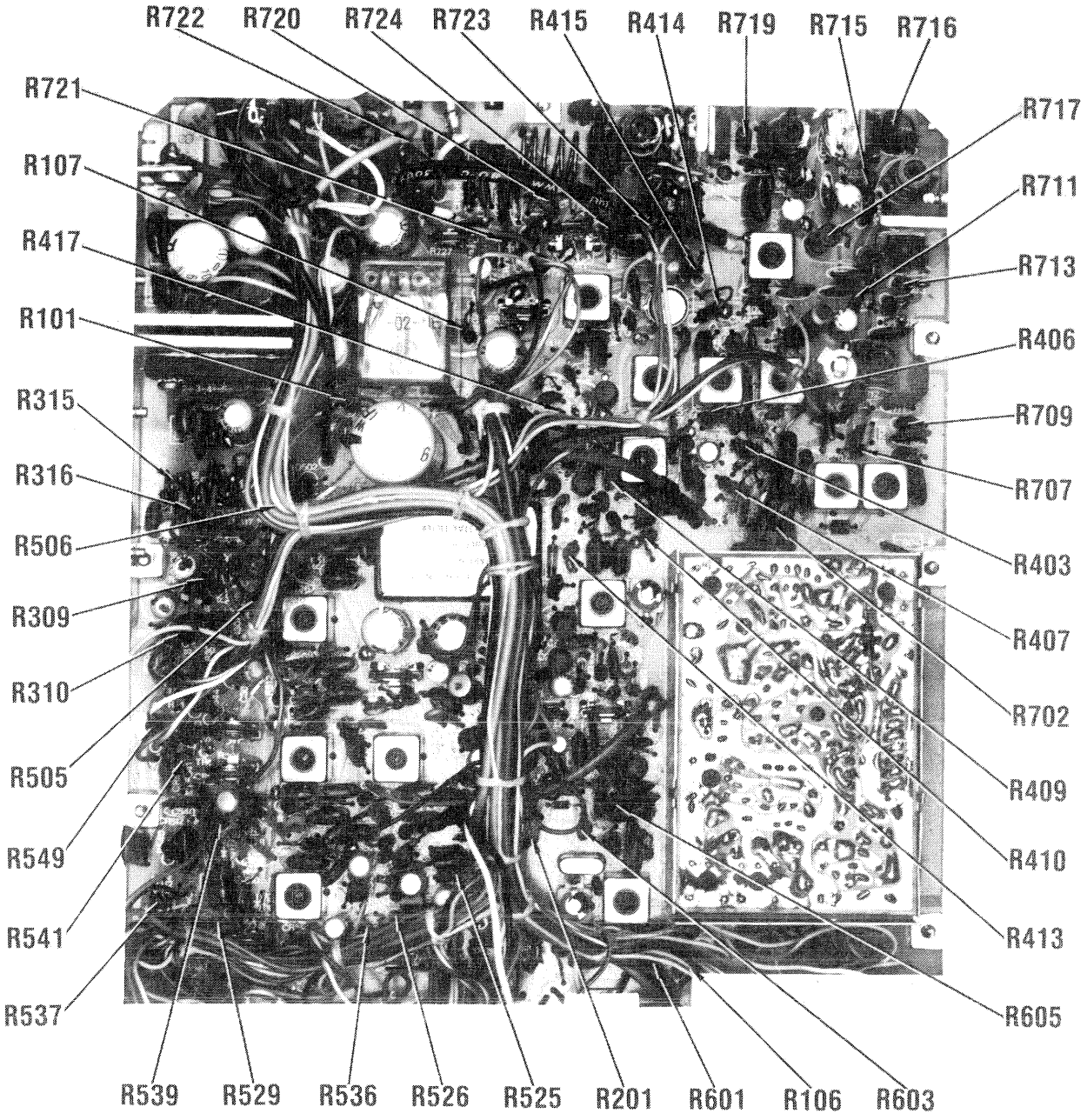
R722
R720
R724
R723
R415
R414
R719
R715
R716
R721
R107
R417
R101
R315
R316
R506
R309
R310
R505
R549
R541
R537
R539
R529
R536
R526
R525
R201
R601
R106
R603
R605
R413
R410
R409
R702
R407
R403
R707
R709
R406
R713
R711
R717

MAIN BOARD

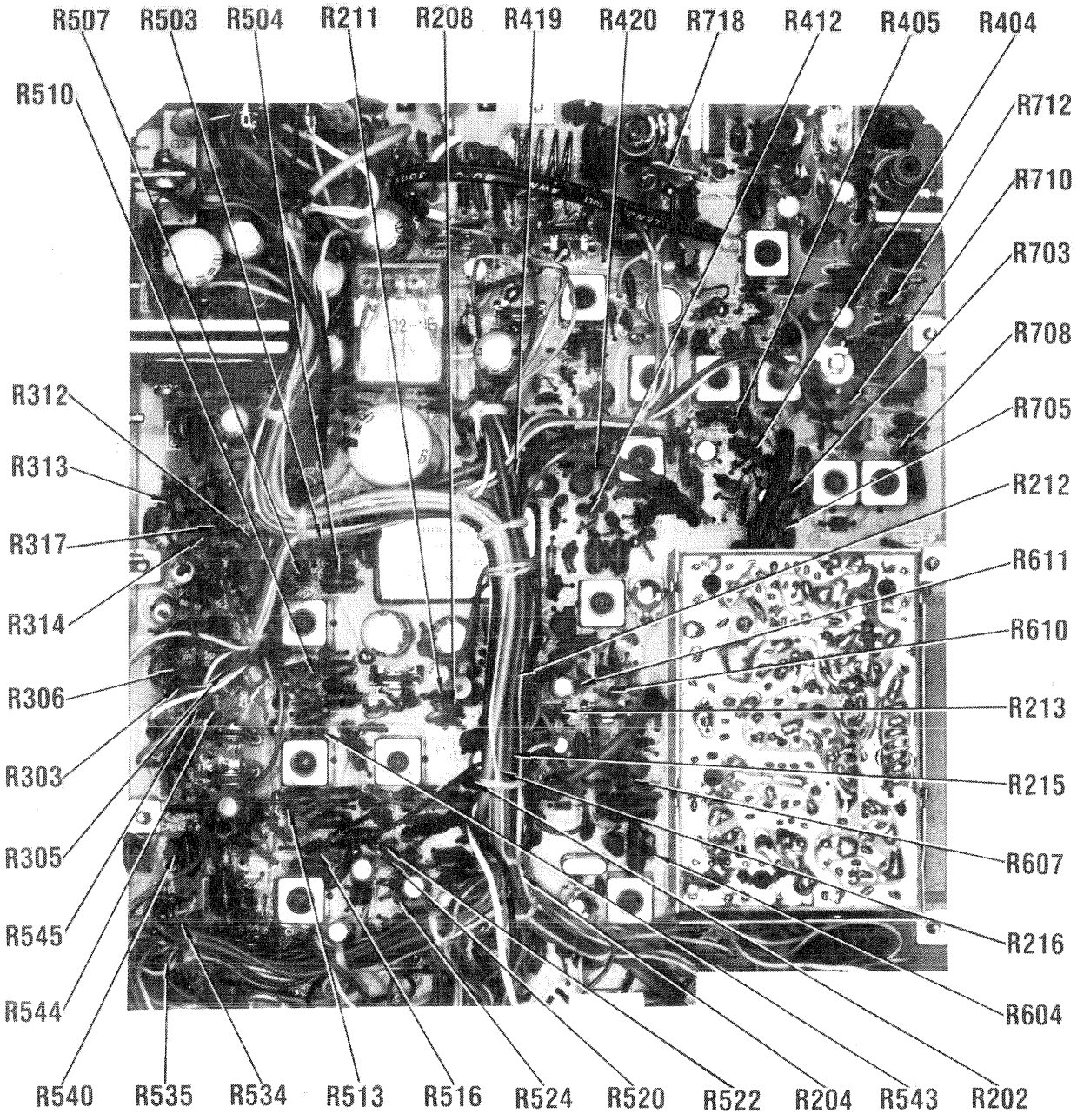
R507
R503
R504
R211
R208
R419
R420
R718
R412
R405
R404
R510
R712
R710
R703
R708
R312
R705
R313
R212
R317
R611
R314
R610
R306
R213
R303
R215
R305
R607
R545
R216
R544
R604
R540
R535
R534
R513
R516
R524
R520
R522
R204
R543
R202

MAIN BOARD

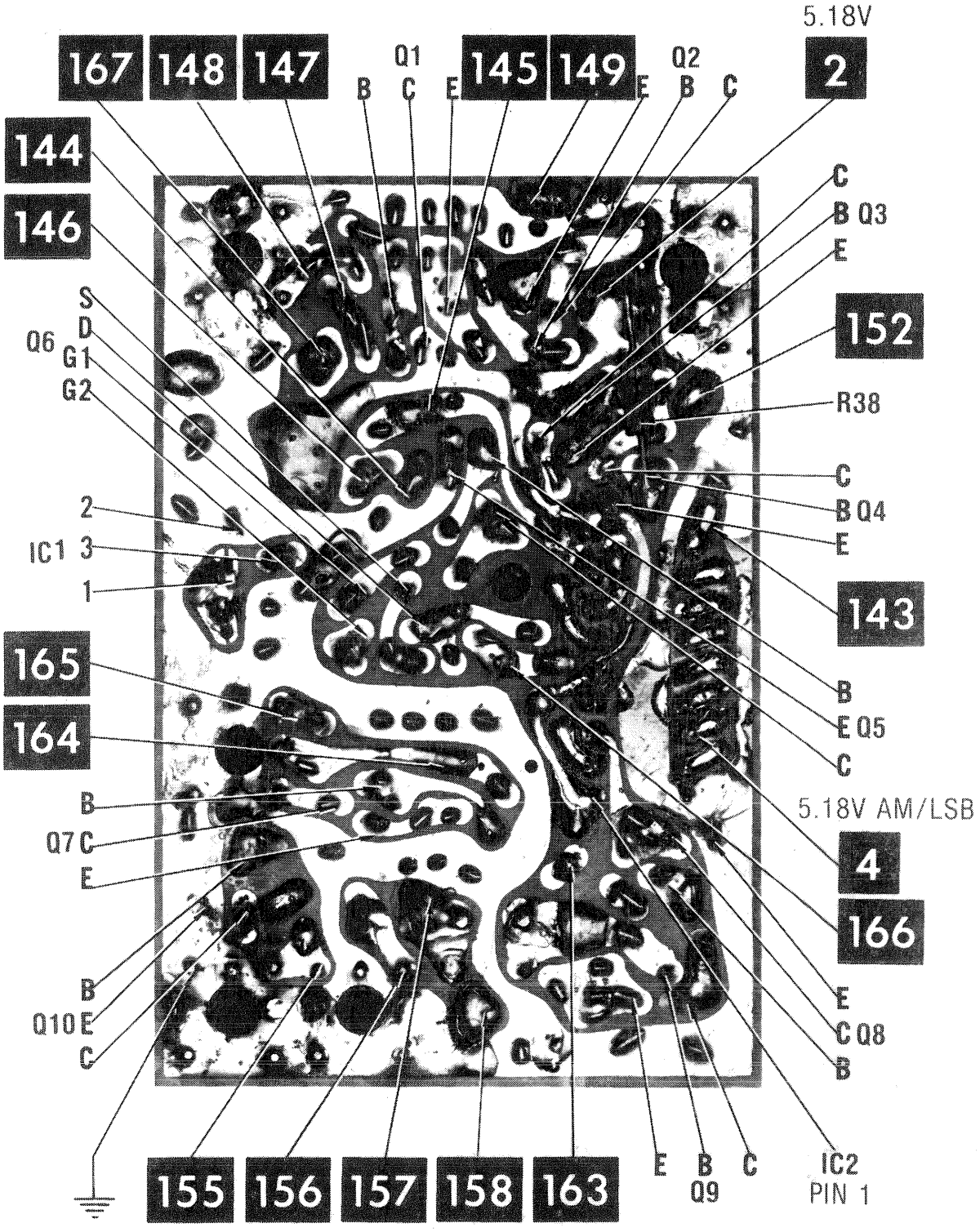
5.18V
167
148
147
Q1
B C E
145
149
E
Q2
B C
2
144
146
C
B Q3
E
S
D
Q6 G1
G2
152
R38
C
B Q4
E
2
IC1 3
1
143
165
B
E Q5
C
164
B
Q7 C
E
5.18V AM/LSB
4
166
B
Q10 E
C
E
C Q8
B
155
156
157
158
163
E B C
Q9
IC2
PIN 1

PLL BOARD

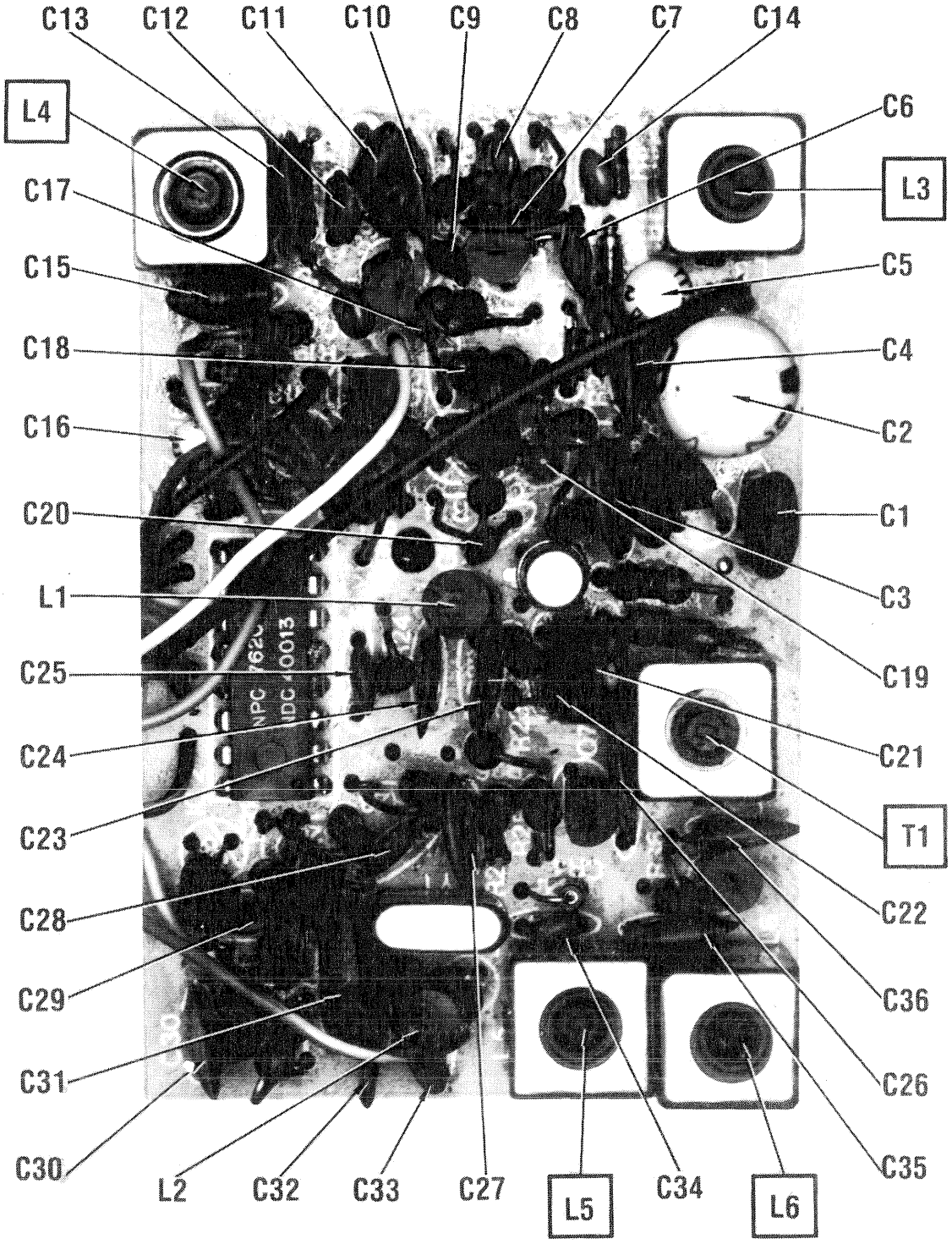
C13
C12
C11
C10
C9
C8
C7
C14
L4
C6
L3
C17
C15
C5
C18
C4
C16
C2
C20
C1
L1
C3
C19
C25
C24
C21
C23
T1
C28
C22
C29
C36
C31
C26
C30
L2
C32
C33
C27
L5
C34
L6
C35

PLL BOARD

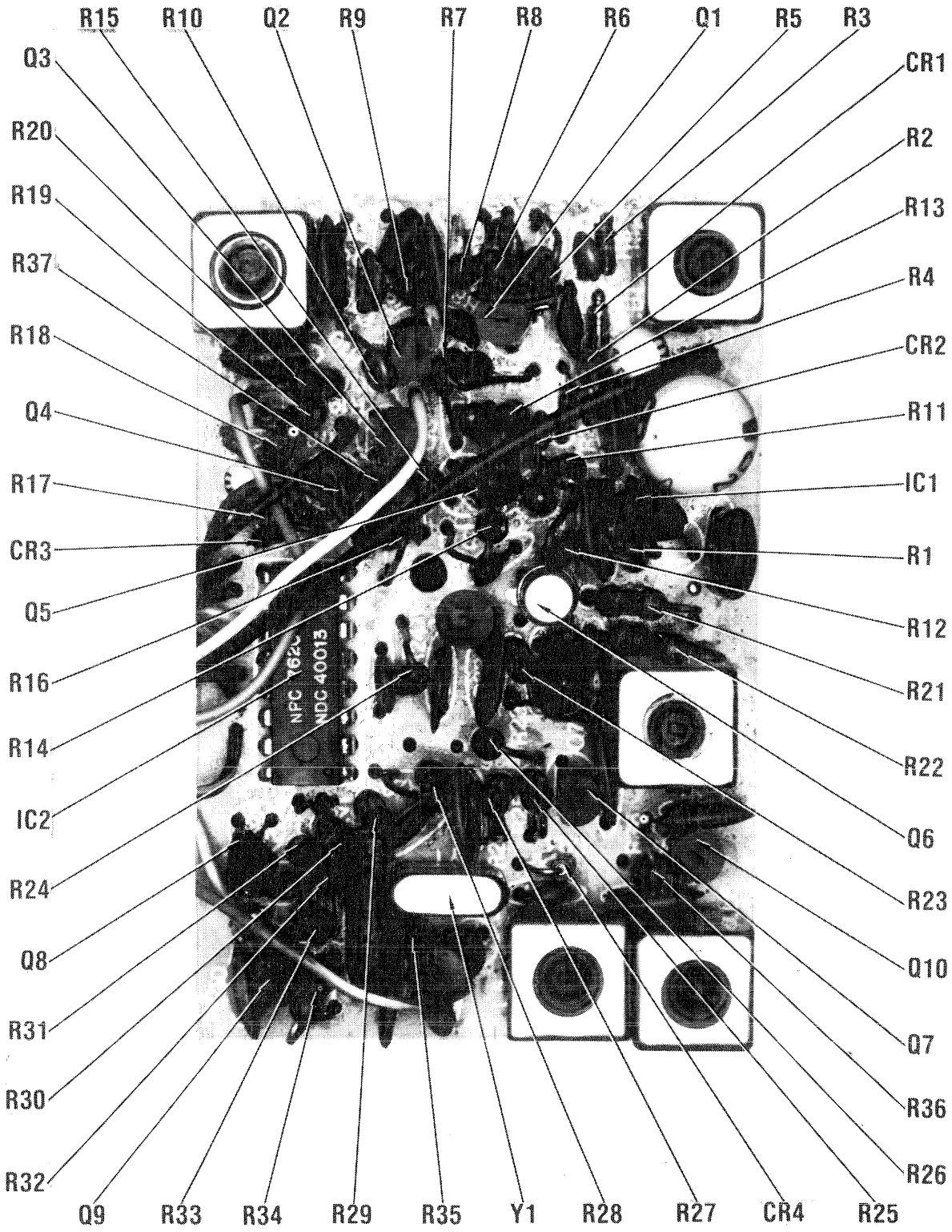
R15
R10
Q2
R9
R7
R8
R6
Q1
R5
R3
Q3
CR1
R20
R2
R19
R13
R37
R4
R18
CR2
Q4
R11
R17
IC1
CR3
R1
Q5
R12
R16
R21
R14
R22
IC2
Q6
R24
R23
Q8
Q10
R31
Q7
R30
R36
R32
R26
Q9
R33
R34
R29
R35
Y1
R28
R27
CR4
R25
NPC
NDC 40013

PLL BOARD

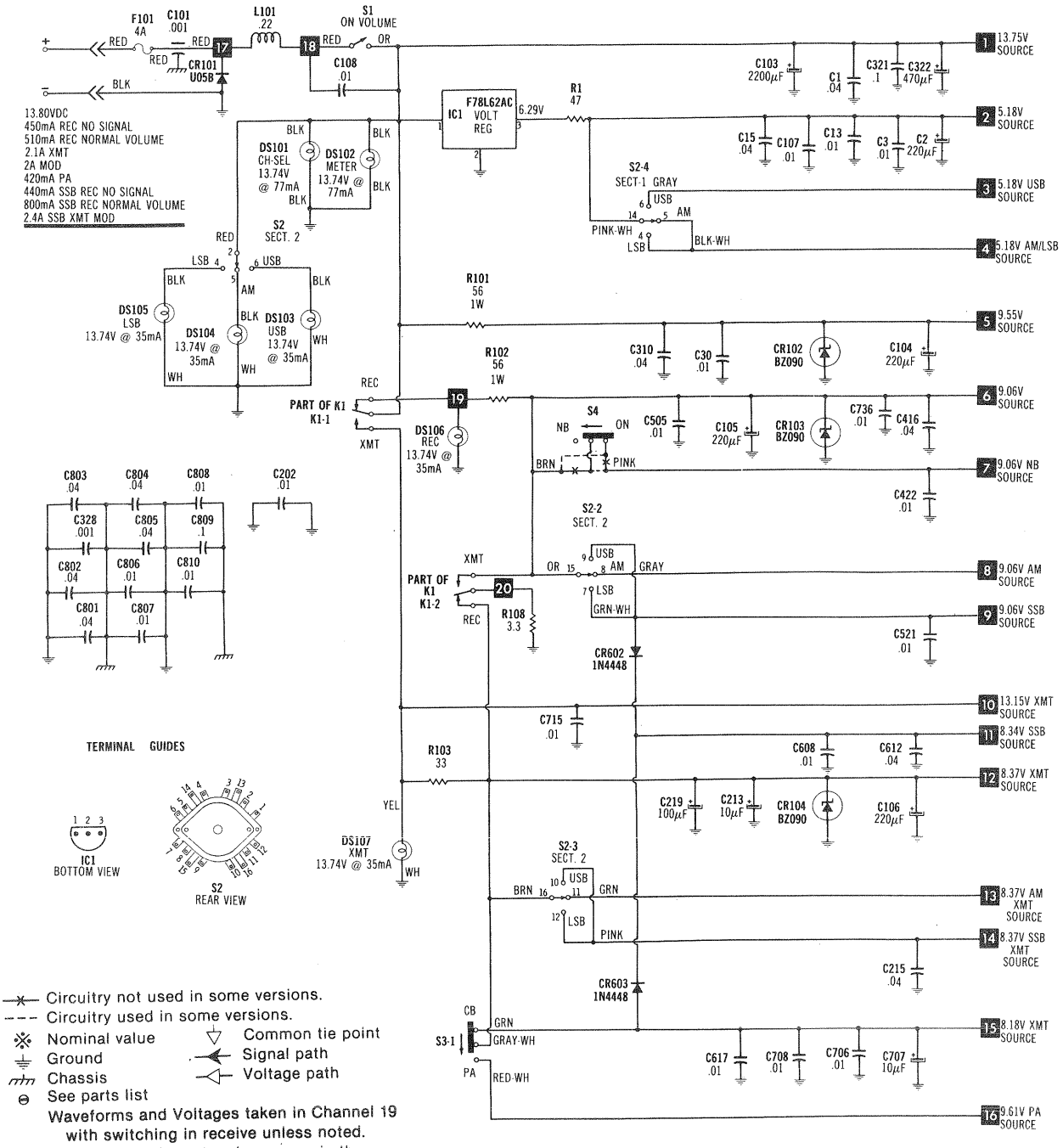

- Circuitry not used in some versions.
- Circuitry used in some versions.
- Nominal value
- Ground
- Chassis
- See parts list
- Common tie point
- Signal path
- Voltage path

Waveforms and Voltages taken in Channel 19 with switching in receive unless noted.
Item numbers in rectangles appear in the alignment/adjustment instructions.
Supply voltage maintained as shown at input.
Voltages measured with digital meter, no signal.
Controls adjusted for normal operation.
Terminal identification may not be found on unit.
Resistors are 1/2W or less, 5% unless noted.
Value in ( ) used in some versions.
Arrow head(s) at coils and transformers indicates accessibility of tuning slug(s).

A PHOTOFACT STANDARD NOTATION SCHEMATIC WITH CIRCUITRACE®

POWER SUPPLY SCHEMATIC

PARTS LIST AND DESCRIPTION

(When ordering parts, state Model, Part Number, and Description.)

WIRING DATA

Cable (Speaker)(Unshielded).....	Use BELDEN No. 8782 (AWG24)(4 colors)
Shielding Strap.....	Use BELDEN No. 8660 (3/16" width)
Hook-up Wire (General Use).....	Use BELDEN No. 8524 (AWG22)(13 colors)
Hook-up Wire (Shielded).....	Use BELDEN No. 8401 (Braided Shield)(1 conductor)(AWG25)
	Use BELDEN No. 8421 (Spiral Shield)(1 conductor)(AWG25)
	Use BELDEN No. 8737 (Spiral Shield)(2 conductor)(AWG22)
Coax (Transmission Line).....	Use BELDEN No. 8216 (RG-174/U, 50 ohms)
Microphone Cable (Coiled).....	Use BELDEN No. 8497 (3 conductor-1 shielded)(6 ft.)(AWG22)
Microphone Cable (Coiled).....	Use BELDEN No. 9466 (3 conductor-1 shielded)(6 ft.)(AWG28)
Microphone Cable (Coiled).....	Use BELDEN No. 9468 (3 conductor-1 shielded)(6 ft.)(AWG31)

SEMICONDUCTORS (Select replacement transistor for best results)

ITEM No.	TYPE No.	MFGR. PART No.	REPLACEMENT DATA							
			GENERAL ELECTRIC PART No.	MALLORY PART No.	RAYTHEON PART No.	RCA PART No.	SYLVANIA PART No.	THORDARSON PART No.	WORKMAN PART No.	ZENITH PART No.
CR1	BB142	022-2823-501	GG		REN 612	SK3325/612	ECG612	TM612		103-176
CR2	1N4448	523-1000-883	GE-514	PTC214	REN 177	SK3100/519	ECG519	TM519	WEP925/519	103-131
CR3	1N4448	523-1000-883	GE-514	PTC214	REN 177	SK3100/519	ECG519	TM519	WEP925/519	103-131
CR4	1S2688	022-2823-503	GE-90		REN 614	SK3327/614	ECG614	TM614	WEP200/614	103-219
CR101	U05B	022-2823-001	GE-512	PTC204	REN 156	SK3051/156	ECG156	TM156	WEP4008/156	212-Z9000
CR102	BZ090	022-2823-002	GEZD-9.1	ZB9.1B	REN 139	SK3060/139A	ECG139A	TM139A/**	WEP1109/139A	103-272
CR103	BZ090	022-2823-002	GEZD-9.1	ZB9.1B	REN 139	SK3060/139A	ECG139A	TM139A/**	WEP1109/139A	103-272
CR104	BZ090	022-2823-002	GEZD-9.1	ZB9.1B	REN 139	SK3060/139A	ECG139A	TM139A/**	WEP1109/139A	103-272
CR201	1N4448	523-1000-883	GE-514	PTC214	REN 177	SK3100/519	ECG519	TM519	WEP925/519	103-131
CR202	1N60	022-2823-003	1N60	PTC206	REN 109	SK3088	ECG109	TM109/**	WEP134/109	103-Z9001
CR203	1N4448	523-1000-883	GE-514	PTC214	REN 177	SK3100/519	ECG519	TM519	WEP925/519	103-131
CR204	1N4448	523-1000-883	GE-514	PTC214	REN 177	SK3100/519	ECG519	TM519	WEP925/519	103-131
CR205	1N4448	523-1000-883	GE-514	PTC214	REN 177	SK3100/519	ECG519	TM519	WEP925/519	103-131
CR301	1N60	022-2823-003	1N60	PTC206	REN 109	SK3088	ECG109	TM109/**	WEP134/109	103-Z9001
CR402	1S2472	022-2823-005	GE-514	PTC214	REN 177	SK3100/519	ECG519	TM519	WEP925/519	103-131
CR403	1S2472	022-2823-005	GE-514	PTC214	REN 177	SK3100/519	ECG519	TM519	WEP925/519	103-131
CR404	1N4448	523-1000-883	GE-514	PTC214	REN 177	SK3100/519	ECG519	TM519	WEP925/519	103-131
CR405	1N60	022-2823-003	1N60	PTC206	REN 109	SK3088	ECG109	TM109/**	WEP134/109	103-Z9001
CR406	1N60	022-2823-003	1N60	PTC206	REN 109	SK3088	ECG109	TM109/**	WEP134/109	103-Z9001
CR407	1N60	022-2823-003	1N60	PTC206	REN 109	SK3088	ECG109	TM109/**	WEP134/109	103-Z9001
CR408	1N34A	022-2823-006	1N34AS	PTC207	REN 109	SK3087	ECG109	TM109/**	WEP134/109	103-Z9001
CR501	1N60	022-0283-003	1N60	PTC206	REN 109	SK3088	ECG109	TM109/**	WEP134/109	103-Z9001
CR502	1N60	022-2823-003	1N60	PTC206	REN 109	SK3088	ECG109	TM109/**	WEP134/109	103-Z9001
CR503	1N60	022-2823-003	1N60	PTC206	REN 109	SK3088	ECG109	TM109/**	WEP134/109	103-Z9001
CR504	1N60	022-2823-003	1N60	PTC206	REN 109	SK3088	ECG109	TM109/**	WEP134/109	103-Z9001
CR505	1N60	022-2823-003	1N60	PTC206	REN 109	SK3088	ECG109	TM109/**	WEP134/109	103-Z9001
CR506	1N60	022-2823-003	1N60	PTC206	REN 109	SK3088	ECG109	TM109/**	WEP134/109	103-Z9001
CR507	1N34A	022-2823-006	1N34AS	PTC207	REN 109	SK3087	ECG109	TM109/**	WEP134/109	103-Z9001
CR508	1N4448	523-1000-883	GE-514	PTC214	REN 177	SK3100/519	ECG519	TM519	WEP925/519	103-131
CR509	1N4448	523-1000-883	GE-514	PTC214	REN 177	SK3100/519	ECG519	TM519	WEP925/519	103-131
CR510	1N60	022-2823-003	1N60	PTC206	REN 109	SK3088	ECG109	TM109/**	WEP134/109	103-Z9001
CR511	1N4448	523-1000-883	GE-514	PTC214	REN 177	SK3100/519	ECG519	TM519	WEP925/519	103-131
CR512	1N4448	523-1000-883	GE-514	PTC214	REN 177	SK3100/519	ECG519	TM519	WEP925/519	103-131
CR513	1N60	022-2823-003	1N60	PTC206	REN 109	SK3088	ECG109	TM109/**	WEP134/109	103-Z9001
CR514	1N4448	523-1000-883	GE-514	PTC214	REN 177	SK3100/519	ECG519	TM519	WEP925/519	103-131
CR515	1N4448	523-1000-883	GE-514	PTC214	REN 177	SK3100/519	ECG519	TM519	WEP925/519	103-131
CR516	1N4448	523-1000-883	GE-514	PTC214	REN 177	SK3100/519	ECG519	TM519	WEP925/519	103-131
CR601	1N4448	523-1000-883	GE-514	PTC214	REN 177	SK3100/519	ECG519	TM519	WEP925/519	103-131
CR602	1N4448	523-1000-883	GE-514	PTC214	REN 177	SK3100/519	ECG519	TM519	WEP925/519	103-131
CR603	1N4448	523-1000-883	GE-514	PTC214	REN 177	SK3100/519	ECG519	TM519	WEP925/519	103-131
CR604	1N60P	022-2823-502	1N60	PTC206	REN 109	SK3088	ECG109	TM109/**	WEP134/109	103-Z9001
CR605	1N60P	022-2823-502	1N60	PTC206	REN 109	SK3088	ECG109	TM109/**	WEP134/109	103-Z9001
CR606	1N60P	022-2823-502	1N60	PTC206	REN 109	SK3088	ECG109	TM109/**	WEP134/109	103-Z9001
CR607	1N60P	022-2823-502	1N60	PTC206	REN 109	SK3088	ECG109	TM109/**	WEP134/109	103-Z9001
CR608	1N60	022-2823-003	1N60	PTC206	REN 109	SK3088	ECG109	TM109/**	WEP134/109	103-Z9001
CR701	1N4448	523-1000-883	GE-514	PTC214	REN 177	SK3100/519	ECG519	TM519	WEP925/519	103-131
CR702	1S990S	022-2823-010	GE-300	PTC214	REN 177	SK3175/177	ECG177	TM177	WEP1062/177	103-131
CR703	1S990S	022-2823-010	GE-300	PTC214	REN 177	SK3175/177	ECG177	TM177	WEP1062/177	103-131
CR704	1S990S	022-2823-010	GE-300	PTC214	REN 177	SK3175/177	ECG177	TM177	WEP1062/177	103-131
CR705	10D4	022-2823-011	GE-504A	PTC201	REN 116	SK3312	ECG116	TM116	WEP157	212-76-02
CR706	10D4	022-2823-011	GE-504A	PTC201	REN 116	SK3312	ECG116	TM116	WEP157	212-76-02
CR707	1N60	022-2823-003	1N60	PTC206	REN 109	SK3088	ECG109	TM109/**	WEP134/109	103-Z9001
CR708	1N60	022-2823-003	1N60	PTC206	REN 109	SK3088	ECG109	TM109/**	WEP134/109	103-Z9001
CR709	1N4448	523-1000-883	GE-514	PTC214	REN 177	SK3100/519	ECG519	TM519	WEP925/519	103-131
CR710	1N60	022-2823-003	1N60	PTC206	REN 109	SK3088	ECG109	TM109/**	WEP134/109	103-Z9001
IC1	F78L62AC					SK3831	ECG988	TM988		
	78L06C	022-2844-501				SK3831	ECG988	TM988		
IC2	NDC40013	022-2844-502								
IC301	HA1339	022-2844-001				SK3708/1169	ECG1169	TM1169		221-Z9125
IC401	UA703HC		GEIC-12	PTC743	REN 703A	SK3157/703A	ECG703A	TM703A	WEP500/703A	221-32
	UA703	022-2844-002	GEIC-12	PTC743	REN 703A	SK3157/703A	ECG703A	TM703A	WEP500/703A	221-32
Q1	2SC710C	022-2876-007	GE-211*	PTC132*	REN 123AP*	SK3356	ECG107*	TM107*/**	WEP710	121-Z9000A*
Q2	2SC710C	022-2876-007	GE-211*	PTC132*	REN 123AP*	SK3356	ECG107*	TM107*/**	WEP710	121-Z9000A*
Q3	2SC710C	022-2876-007	GE-211*	PTC132*	REN 123AP*	SK3356	ECG107*	TM107*/**	WEP710	121-Z9000A*
Q4	2SA844C	022-2876-501	GE-244*	PTC103*	REN 129*	SK3114/290	ECG294	TM294	WEP564	121-Z9005
Q5	2SC710C	022-2876-007	GE-211*	PTC132*	REN 123AP*	SK3356	ECG107*	TM107*/**	WEP710	121-Z9000A*
Q6	3SK41L	022-2876-013	GE-FET-4	PTC182*	REN 222	SK3065/222	ECG222	TM222	WEP905/222	121-826
Q7	2SC710C	022-2876-007	GE-211*	PTC132*	REN 123AP*	SK3356	ECG107*	TM107*/**	WEP710	121-Z9000A*
Q8	2SC710C	022-2876-007	GE-211*	PTC132*	REN 123AP*	SK3356	ECG107*	TM107*/**	WEP710	121-Z9000A*
Q9	2SC710C	022-2876-007	GE-211*	PTC132*	REN 123AP*	SK3356	ECG107*	TM107*/**	WEP710	121-Z9000A*

PARTS LIST AND DESCRIPTION (CONTINUED)

(When ordering parts, state Model, Part Number, and Description.)

SEMICONDUCTORS (Select replacement transistor for best results) (cont)

ITEM No.	TYPE No.	MFGR. PART No.	REPLACEMENT DATA							
			GENERAL ELECTRIC PART No.	MALLORY PART No.	RAYTHEON PART No.	RCA PART No.	SYLVANIA PART No.	THORDARSON PART No.	WORKMAN PART No.	ZENITH PART No.
Q10	2SC710C	022-2876-007	GE-211*	PTC132*	REN 123AP*	SK3356	ECG107*	TM107*/**	WEP710	121-Z9000A*
Q201	2SK40C	022-2876-502	GE-FET-2*	PTC161*	REN 132*	SK3112	ECG312*	TM312*	WEP920/312*	921-1067*
Q202	2SD30'		GE-59	PTC134	REN 103A	SK3835/103A	ECG103A	TM103A/**	WEP641B/103A	121-Z9015*
	2SD187Y	022-2876-002	GE-59	PTC134	REN 103A	SK3835/103A	ECG103A	TM103A/**	WEP641B/103A	121-Z9015*
Q301	2SC710C	022-2876-007	GE-211*	PTC132*	REN 123AP*	SK3356	ECG107*	TM107*/**	WEP710	121-Z9000A*
Q302	2SA844C	022-2876-501	GE-244*	PTC103*	REN 129*	SK3114/290	ECG294	TM294	WEP564	121-Z9005
Q303	2SC1647Q		GE-62	PTC139*	REN 199	SK3245/199	ECG199	TM199	WEP66/199	121-972
	2SC372Y	022-2876-003	GE-61*	PTC121*	REN 123A*	SK3245/199	ECG123AP*	TM123AP*/**	WEP372	121-Z9000A*
Q304	2SC1647Q		GE-62	PTC139*	REN 199	SK3245/199	ECG199	TM199	WEP66/199	121-972
	2SC372Y	022-2876-003	GE-61*	PTC121*	REN 123A*	SK3245/199	ECG123AP*	TM123AP*/**	WEP372	121-Z9000A*
Q305	2SC1061	022-2876-014	GE-66	PTC167	REN 152	SK3893/152	ECG152	TM152/**	WEP745/152	121-987-03
Q401	2SK41E	022-2876-503	GE-FET-2	PTC161	REN 132*	SK3834/132	ECG312*	TM312*	WEP920/312*	921-1067*
Q402	2SC710C	022-2876-007	GE-211*	PTC132*	REN 123AP*	SK3356	ECG107*	TM107*/**	WEP710	121-Z9000A*
Q403	3SK41L	022-2876-013	GE-FET-4	PTC182*	REN 222	SK3065/222	ECG222	TM222	WEP905/222	121-826
Q404	2SC710C	022-2876-007	GE-211*	PTC132*	REN 123AP*	SK3356	ECG107*	TM107*/**	WEP710	121-Z9000A*
Q405	2SK55D		GE-FET-2	PTC161	REN 132*	SK3834/132	ECG312*	TM312*	WEP920/312*	921-1067*
	2SK54B	022-2876-504	GE-FET-2	PTC161	REN 132*	SK3834/132	ECG312*	TM312*	WEP920/312*	921-1067*
Q406	2SK54J		GE-FET-2	PTC161	REN 132*	SK3834/132	ECG312*	TM312*	WEP920/312*	921-1067*
	2SK55D	022-2876-006	GE-FET-2	PTC161	REN 132*	SK3834/132	ECG312*	TM312*	WEP920/312*	921-1067*
Q501	2SC710C	022-2876-007	GE-211*	PTC132*	REN 123AP*	SK3356	ECG107*	TM107*/**	WEP710	121-Z9000A*
Q502	2SC710C	022-2876-007	GE-211*	PTC132*	REN 123AP*	SK3356	ECG107*	TM107*/**	WEP710	121-Z9000A*
Q503	2SC710C	022-2876-007	GE-211*	PTC132*	REN 123AP*	SK3356	ECG107*	TM107*/**	WEP710	121-Z9000A*
Q504	2SC710C	022-2876-007	GE-211*	PTC132*	REN 123AP*	SK3356	ECG107*	TM107*/**	WEP710	121-Z9000A*
Q505	2SC710C	022-2876-007	GE-211*	PTC132*	REN 123AP*	SK3356	ECG107*	TM107*/**	WEP710	121-Z9000A*
Q506	2SC710C	022-2876-007	GE-211*	PTC132*	REN 123AP*	SK3356	ECG107*	TM107*/**	WEP710	121-Z9000A*
Q507	2SC1647Q		GE-62	PTC139*	REN 199	SK3245/199	ECG199	TM199	WEP66/199	121-972
	2SC372Y	022-2876-003	GE-61*	PTC121*	REN 123A*	SK3245/199	ECG123AP*	TM123AP*/**	WEP372	121-Z9000A*
Q508	2SK34E	022-2876-505	GE-FET-2*	PTC161*	REN 132*	SK3448	ECG312*	TM312*	WEP920/312*	921-1067*
Q509	2SC710C	022-2876-007	GE-211*	PTC132*	REN 123AP*	SK3356	ECG107*	TM107*/**	WEP710	121-Z9000A*
Q601	2SC710C	022-2876-007	GE-211*	PTC132*	REN 123AP*	SK3356	ECG107*	TM107*/**	WEP710	121-Z9000A*
Q602	2SC710C	022-2876-007	GE-211*	PTC132*	REN 123AP*	SK3356	ECG107*	TM107*/**	WEP710	121-Z9000A*
Q603	2SC710C	022-2876-007	GE-211*	PTC132*	REN 123AP*	SK3356	ECG107*	TM107*/**	WEP710	121-Z9000A*
Q604	2SC710C	022-2876-007	GE-211*	PTC132*	REN 123AP*	SK3356	ECG107*	TM107*/**	WEP710	121-Z9000A*
Q701	3SK41L	022-2876-013	GE-FET-4	PTC182*	REN 222	SK3065/222	ECG222	TM222	WEP905/222	121-826
Q702	2SC710C	022-2876-007	GE-211*	PTC132*	REN 123AP*	SK3356	ECG107*	TM107*/**	WEP710	121-Z9000A*
Q703	2SC1449	022-2876-010	GE-270	PTC180	REN 295	SK3253/295	ECG295	TM295	WEP701	121-880
Q704	2SC1306	022-2876-011	GE-215	PTC186	REN 235	SK3239/236	ECG235	TM235/**	WEP785/235	121-Z9039
Q705	2SC1969	022-2876-506	GE-216	PTC186	REN 236	SK3239/236	ECG236	TM236	WEP840/236	121-Z9040

* Lead configuration may vary from original.
/** Also available as exact type replacement.

ELECTROLYTIC CAPACITORS

ITEM No.	RATING	REPLACEMENT DATA				
		MFGR. PART No.	CORNELL-DUBILIER PART No.	MALLORY PART No.	SPRAGUE PART No.	
					Q-LINE	GENERAL LINE
C2	220 16V	022-2810-017	PC250-25	VTT220H16	QV1-117	EV-1240
C5	10 16V	022-2810-013	PC10-25	VTT10B25	QV1-41	EV-1222
C16	.22 50V	022-2810-502		TDC224M050EL	QDT1-10	SD50-R229
C18	.22 50V			TDC224M050EL	QDT1-10	SD50-R229
C19	1 25V	510-2045-109		TDC105M050EL	QDT1-25	SD50-19
C103	2200 16V	022-2810-021	WBR2000-16*	TC1520C*	QE1-643	TVA-1175.3*
C104	220 16V	022-2810-017	PC250-25	VTT220H16	QV1-117	EV-1240
C105	220 16V	022-2810-017	PC250-25	VTT220H16	QV1-117	EV-1240
C106	220 16V	022-2810-017	PC250-25	VTT220H16	QV1-117	EV-1240
C204	1 50V	022-2810-009	PC1-50	VTT1A50	QV1-11	EV-1615
C207	10 16V	022-2810-013	PC10-25	VTT10B25	QV1-41	EV-1222
C209	4.7 25V	022-2810-019	PC5-50	VTT4R7B50	QV1-31	EV-1619.1
C210	4.7 25V	022-2810-019	PC5-50	VTT4R7B50	QV1-31	EV-1619.1
C211	1 50V	022-2810-009	PC1-50	VTT1A50	QV1-11	EV-1615
C212	10 16V	022-2810-013	PC10-25	VTT10B25	QV1-41	EV-1222
	46 16V	022-2810-015	PC50-16	VTT47D16	QV1-73	EV-1226
C213	10 16V	022-2810-013	PC10-25	VTT10B25	QV1-41	EV-1222
C214	1 50V	022-2810-009	PC1-50	VTT1A50	QV1-11	EV-1615
C216	.47 50V	022-2810-025	PC1-50	VTTR47A63	QV1-3	EV-1610
C217	1 50V	022-2810-009	PC1-50	VTT1A50	QV1-11	EV-1615
C218	1 50V	022-2810-009	PC1-50	VTT1A50	QV1-11	EV-1615
	.4 50V			TDC474M050EL	QDT1-19	SD50-R479
C219	100 16V		PC100-16	VTT100E16	QV1-95	EV-1231
C301	1 50V	022-2810-009	PC1-50	VTT1A50	QV1-11	EV-1615
C302	1 50V	022-2810-009	PC1-50	VTT1A50	QV1-11	EV-1615
C303	10 16V	022-2810-013	PC10-25	VTT10B25	QV1-41	EV-1222
C305	4.7 35V	022-2810-019	PC5-50	VTT4R7B50	QV1-31	EV-1619.1
C306	.22 50V	022-2810-502		TDC224M050EL	QDT1-10	SD50-R229
C314	47 16V	022-2810-015	PC50-16	VTT47D16	QV1-73	EV-1226
C316	220 16V	022-2810-017	PC250-25	VTT220H16	QV1-117	EV-1240
C318	47 16V	022-2810-015	PC50-16	VTT47D16	QV1-73	EV-1226
C322	470 16V	022-2810-018	PC500-16	VTT470K16	QV1-151	EV-1251
C323	220 16V	022-2810-017	PC250-25	VTT220H16	QV1-117	EV-1240
C324	220 16V	022-2810-017	PC250-25	VTT220H16	QV1-117	EV-1240
C403	.47 50V	022-2810-025	PC1-50	VTTR47A63	QV1-3	EV-1610
C430	1 50V	022-2810-009	PC1-50	VTT1A50	QV1-11	EV-1615
C503	1 50V	022-2810-009	PC1-50	VTT1A50	QV1-11	EV-1615
C524	1 50V	022-2810-009	PC1-50	VTT1A50	QV1-11	EV-1615
C525	10 16V	022-2810-013	PC10-25	VTT10B25	QV1-41	EV-1222
C527	1 50V	022-2810-009	PC1-50	VTT1A50	QV1-11	EV-1615
C528	1 50V	022-2810-009	PC1-50	VTT1A50	QV1-11	EV-1615
C529	1 50V	022-2810-009	PC1-50	VTT1A50	QV1-11	EV-1615
C534	1 50V	022-2810-009	PC1-50	VTT1A50	QV1-11	EV-1615

PARTS LIST A

(When ordering parts,

ELECTROLYTI

ITEM No.	RATIN
C535	1 50V
C537	1 50V
C707	10 16
C709	220 5
C723	10 16
C743	10 16
C745	10 16

* Axial replaceme

CAPACITORS

ITEM No.	RATIN
C1	.04 50V 1
C3	.01 50V
C4	.01 50V
C6	56 50V
C7	100 50V
C8	47 N750 5
C9	2 50V
C10	.01 50V
C11	15 50V
C12	56 50V
C13	.01 50V
C14	30 N750 5
C15	.04 50V
C17	5 50V
C20	5 50V
C21	1.5 50V
C22	.04 50V
C23	100 50V
C24	100 50V
C25	.001 50V
C26	.01 50V
C27	.01 50V
C28	.001 50V
C29	.001 50V
C30	.01 50V
C31	330 50V
C32	150 50V
C33	.001 50V
C34	22 N750 5
C35	.01 50V
C36	.01 50V
C101	.001
C102	.01 50V
C107	.01 50V
C108	.01 50V
C201	.01 50V
C202	.01 50V
C203	.01 50V
C205	.01 50V
C206	.001 50V
C208	.01 50V
C215	.04 50V 1
C304	.01 50V
C307	.01 50V 1
C308	.01 50V 1
C309	.0047 50V
C310	.04 50V 1
C311	.01 50V 1
C312	120 50V
C313	300 50V
C315	.01 50V
C317	.033 50V
C319	.01 50V
C320	.1 50V
C321	.1 50V
C325	.04 50V 1
C326	.001 1KV
C327	.001 1KV
C328	.001 1KV
C330	.047 50V
C401	20 50V
C402	.01 50V
C404	.01 50V
C405	3 50V
C406	3 50V
C407	.01 50V
C408	.01 50V
C409	5 50V
C410	.01 50V
C411	15 50V
C412	.01 50V
C413	.01 50V
C414	33 50V
C415	62 50V
C416	.04 50V 1
C417	20 50V
C418	.04 50V 1
C419	.001 50V
C420	.01 50V
C421	20 50V
C422	.01 50V

THORDARSON PART No.	WORKMAN PART No.	ZENITH PART No.
TM107*/**	WEP710	121-Z9000A*
TM312*	WEP920/312*	921-1067*
TM103A/**	WEP641B/103A	121-Z9015*
TM103A/**	WEP641B/103A	121-Z9015*
TM107*/**	WEP710	121-Z9000A*
TM294	WEP564	121-Z9005
TM199	WEP66/199	121-972
TM123AP*/**	WEP372	121-Z9000A*
TM199	WEP66/199	121-972
TM123AP*/**	WEP372	121-Z9000A*
TM152/**	WEP745/152	121-987-03
TM312*	WEP920/312*	921-1067*
TM107*/**	WEP710	121-Z9000A*
TM222	WEP905/222	121-826
TM107*/**	WEP710	121-Z9000A*
TM312*	WEP920/312*	921-1067*
TM312*	WEP920/312*	921-1067*
TM312*	WEP920/312*	921-1067*
TM312*	WEP920/312*	921-1067*
TM107*/**	WEP710	121-Z9000A*
TM107*/**	WEP710	121-Z9000A*
TM107*/**	WEP710	121-Z9000A*
TM107*/**	WEP710	121-Z9000A*
TM107*/**	WEP710	121-Z9000A*
TM199	WEP66/199	121-972
TM123AP*/**	WEP372	121-Z9000A*
TM312*	WEP920/312*	921-1067*
TM107*/**	WEP710	121-Z9000A*
TM107*/**	WEP710	121-Z9000A*
TM107*/**	WEP710	121-Z9000A*
TM107*/**	WEP710	121-Z9000A*
TM222	WEP905/222	121-826
TM107*/**	WEP710	121-Z9000A*
TM295	WEP701	121-880
TM235/**	WEP785/235	121-Z9039
TM236	WEP840/236	121-Z9040

SPRAGUE PART No.	
-LINE	GENERAL LINE
-117	EV-1240
-41	EV-1222
1-10	SD50-R229
1-10	SD50-R229
1-25	SD50-19
-643	TVA-1175.3*
-117	EV-1240
-117	EV-1240
-117	EV-1240
-11	EV-1615
-41	EV-1222
-31	EV-1619.1
-31	EV-1619.1
-11	EV-1615
-41	EV-1222
-73	EV-1226
-41	EV-1222
-11	EV-1615
-3	EV-1610
-11	EV-1615
-11	EV-1615
1-19	SD50-R479
-95	EV-1231
-11	EV-1615
-11	EV-1615
-41	EV-1222
-31	EV-1619.1
1-10	SD50-R229
-73	EV-1226
-117	EV-1240
-73	EV-1226
-151	EV-1251
-117	EV-1240
-117	EV-1240
-3	EV-1610
-11	EV-1615
-11	EV-1615
-11	EV-1615
-41	EV-1222
-11	EV-1615
-11	EV-1615
-11	EV-1615

PARTS LIST AND DESCRIPTION (CONTINUED)

(When ordering parts, state Model, Part Number, and Description.)

ELECTROLYTIC CAPACITORS (cont)

ITEM No.	RATING	REPLACEMENT DATA				
		MFGR. PART No.	CORNELL-DUBILIER PART No.	MALLORY PART No.	SPRAGUE PART No.	
					Q-LINE	GENERAL LINE
C535	1 50V	022-2810-009	PC1-50	VTT1A50	QV1-11	EV-1615
C537	1 50V	022-2810-009	PC1-50	VTT1A50	QV1-11	EV-1615
C707	10 16V	022-2810-013	PC10-25	VTT10B25	QV1-41	EV-1222
C709	220 50V	022-2810-507	WBR250-50*	VTT220M50	QV1-123	EV-1540
C723	10 16V	022-2810-013	PC10-25	VTT10B25	QV1-41	EV-1222
C743	10 16V	022-2810-013	PC10-25	VTT10B25	QV1-41	EV-1222
C745	10 16V	022-2810-013	PC10-25	VTT10B25	QV1-41	EV-1222

* Axial replacement for radial device.

CAPACITORS

ITEM No.	RATING	MFGR. PART No.	REPLACEMENT DATA			
			CORNELL-DUBILIER PART No.	MALLORY PART No.	SPRAGUE PART No.	
					Q-LINE	GENERAL LINE
C1	.04 50V 10%		DPMS2S5	EWF1A150		2PS-S50
C3	.01 50V			MAG5011		
C4	.01 50V			MAG5011		
C6	56 50V			CN0456		10TCC-Q56
C7	100 50V		NP0100	CN0310		10TCC-T10
C8	47 N750 50V		N47	CN7447		10TCU-Q47
C9	2 50V		NP02P2	CN0522		10TCC-V22
C10	.01 50V			MAG5011		
C11	15 50V		NP015	CN0415		10TCC-Q15
C12	56 50V			CN0456		10TCC-Q56
C13	.01 50V			MAG5011		
C14	30 N750 50V		N33	CN7433		10TCU-Q33
C15	.04 50V			GP140		5GA-S40
C17	5 50V		NP06P8	CN0568		10TCC-V68
C20	5 50V		NP06P8	CN0568		10TCC-V68
C21	1.5 50V		NP01P5	CN0515		10TCC-V15
C22	.04 50V		DPMS2S5	EWF1A150		2PS-S50
C23	100 50V		NP0100	CN0310		10TCC-T10
C24	100 50V		NP0100	CN0310		10TCC-T10
C25	.001 50V			GP210	QCT2-41	10TS-D10
C26	.01 50V			MAG5011		
C27	.01 50V			MAG5011		
C28	.001 50V			GP210	QCT2-41	10TS-D10
C29	.001 50V			GP210	QCT2-41	10TS-D10
C30	.01 50V			MAG5011		
C31	330 50V		GP330	GP333	QCT2-33	10TS-T33
C32	150 50V			CN0315		10TCC-T15
C33	.001 50V			GP210	QCT2-41	10TS-D10
C34	22 N750 50V			CN15-422		10TCW-Q22
C35	.01 50V			MAG5011		
C36	.01 50V			MAG5011		
C101	.001	022-2810-020				
C102	.01 50V			MAG5011		
C107	.01 50V			MAG5011		
C108	.01 50V			MAG5011		
C201	.01 50V			MAG5011		
C202	.01 50V			MAG5011		
C203	.01 50V			MAG5011		
C205	.01 50V			MAG5011		
C206	.001 50V			GP210	QCT2-41	10TS-D10
C208	.01 50V			MAG5011		
C215	.04 50V 10%		DPMS2S5	EWF1A150		2PS-S50
C304	.01 50V			MAG5011		
C307	.01 50V 10%		WMF1S1	M192P1039R8	QFT2-91	1FT-S10
C308	.01 50V 10%		WMF1S1	M192P1039R8	QFT2-91	1FT-S10
C309	.0047 50V 10%		WMF1D47	M192P4729R8	QFT2-63	1FT-D47
C310	.04 50V 10%		DPMS2S5	EWF1A150		2PS-S50
C311	.01 50V 10%		WMF1S1	M192P1039R8	QFT2-91	1FT-S10
C312	120 50V			CN0312		10TCC-T12
C313	300 50V		GP300	GP330		10TS-T30
C315	.01 50V			MAG5011		
C317	.033 50V		DPMS6S33	M192P3339R8	QFT2-149	1FT-S33
C319	.01 50V			MAG5011		
C320	.1 50V		WMF05P1	M192P1049R8	QFT2-215	1FT-P10
C321	.1 50V		WMF05P1	M192P1049R8	QFT2-215	1FT-P10
C325	.04 50V 10%		DPMS2S5	EWF1A150		2PS-S50
C326	.001 1KV			GP210	QCT2-41	10TS-D10
C327	.001 1KV			GP210	QCT2-41	10TS-D10
C328	.001 1KV			GP210	QCT2-41	10TS-D10
C330	.047 50V 10%		DPMS2S47	M192P4739R8	QFT2-171	1FT-S47
C401	20 50V		NP020	CN0420	QCC2-19	10TCC-Q20
C402	.01 50V			MAG5011		
C404	.01 50V			MAG5011		
C405	3 50V		NP03P3	CN0533		10TCC-V33
C406	3 50V		NP03P3	CN0533		10TCC-V33
C407	.01 50V			MAG5011		
C408	.01 50V			MAG5011		
C409	5 50V		NP06P8	CN0568		10TCC-V68
C410	.01 50V			MAG5011		
C411	15 50V		NP015	CN0415		10TCC-Q15
C412	.01 50V			MAG5011		
C413	.01 50V			MAG5011		
C414	33 50V		NP033	CN0433	QCC2-22	10TCC-Q33
C415	62 50V		NP068	CN0468		10TCC-Q68
C416	.04 50V 10%		DPMS2S5	EWF1A150		2PS-S50
C417	20 50V		NP020	CN0420	QCC2-19	10TCC-Q20
C418	.04 50V 10%		DPMS2S5	EWF1A150		2PS-S50
C419	.001 50V			GP210	QCT2-41	10TS-D10
C420	.01 50V			MAG5011		
C421	20 50V		NP020	CN0420	QCC2-19	10TCC-Q20
C422	.01 50V			MAG5011		

PARTS LIST AND DESCRIPTION (CONTINUED)

(When ordering parts, state Model, Part Number, and Description.)

CAPACITORS (cont)

ITEM No.	RATING	MFGR. PART No.	REPLACEMENT DATA			
			CORNELL-DUBILIER PART No.	MALLORY PART No.	SPRAGUE PART No.	
					Q-LINE	GENERAL LINE
C423	20 50V		NP020	CN0420	QCC2-19	10TCC-Q20
C424	.01 50V			MAG5011		
C425	20 50V		NP020	CN0420	QCC2-19	10TCC-Q20
C427	15 50V		NP015	CN0415		10TCC-Q15
C428	56 50V			CN0456		10TCC-Q56
C429	.001 50V			GP210	QCT2-41	10TS-D10
C501	.001 50V			GP210	QCT2-41	10TS-D10
C502	.04 50V		DPMS2S5	EWF1A150		2PS-S50
C504	.04 50V		DPMS2S5	EWF1A150		2PS-S50
C505	.01 50V			MAG5011		
C506	20 50V		NP020	CN0420	QCC2-19	10TCC-Q20
C507	.01 50V			MAG5011		
C508	.04 50V		DPMS2S5	EWF1A150		2PS-S50
C509	.04 50V		DPMS2S5	EWF1A150		2PS-S50
C510	.04 50V		DPMS2S5	EWF1A150		2PS-S50
C511	.04 50V 10%		DPMS2S5	EWF1A150		2PS-S50
C512	.04 50V 10%		DPMS2S5	EWF1A150		2PS-S50
C513	.04 50V 10%		DPMS2S5	EWF1A150		2PS-S50
C514	.04 50V 10%		DPMS2S5	EWF1A150		2PS-S50
C515	.04 50V 10%		DPMS2S5	EWF1A150		2PS-S50
C516	.04 50V 10%		DPMS2S5	EWF1A150		2PS-S50
C517	.001 50V			GP210	QCT2-41	10TS-D10
C518	.04 50V 10%		DPMS2S5	EWF1A150		2PS-S50
C519	1 50V			CN0510		10TCC-V10
C520	.01 50V	451		MAG5011		
C521	.01 50V	451		MAG5011		
C522	.04 50V 10%	247	DPMS2S5	EWF1A150		2PS-S50
C523	.01 50V	451		MAG5011		
C526	.01 50V	451		MAG5011		
C530	47 50V	130	NP047	CN0447	QCC2-26	10TCC-Q47
C531	100 50V	145	NP0100	CN0310		10TCC-T10
C532	.1 50V 10%		WMF05P1	M192P1049R8	QFT2-215	1FT-P10
C533	.04 50V 10%	247	DPMS2S5	EWF1A150		2PS-S50
C536	3 50V	105	NP03P3	CN0533		10TCC-V33
C538	.01 50V	451		MAG5011		
C539	.1 50V 10%		WMF05P1	M192P1049R8	QFT2-215	1FT-P10
C540	.01 50V	451		MAG5011		
C541	3 50V	105	NP03P3	CN0533		10TCC-V33
C542	.01 50V	451		MAG5011		
C543	.04 50V 10%	247	DPMS2S5	EWF1A150		2PS-S50
C544	.01 50V	451		MAG5011		
C601	.01 50V	451		MAG5011		
C602	.01 50V	451		MAG5011		
C603	5 50V	108	NP06P8	CN0568		10TCC-V68
C604	Trimmer	022-2812-004				
C605	.01 50V	451		MAG5011		
C606	500 50V 5%	326	CD15FD511J03	SX351	QW1-43	MWB-511
C607	180 50V	154		GP318	QCT2-27	10TS-T18
C608	.01 50V	451		MAG5011		
C609	10 50V	110	NP010	CN0410	QCC2-15	10TCC-Q10
C610	10 50V	110	NP010	CN0410	QCC2-15	10TCC-Q10
C611	15 50V	114	NP015	CN0415		10TCC-Q15
C612	.04 50V	247	DPMS2S5	EWF1A150		2PS-S50
C613	100 50V	145	NP0100	CN0310		10TCC-T10
C614	.01 50V	451		MAG5011		
C615	15 50V	114	NP015	CN0415		10TCC-Q15
C616	10pF	022-2812-004				
C617	.01 50V	451		MAG5011		
C618	.001 50V	170		GP210	QCT2-41	10TS-D10
C701	100 50V	145	NP0100	CN0310		10TCC-T10
C702	5 50V	108	NP06P8	CN0568		10TCC-V68
C703	.01 50V	451		MAG5011		
C704	.01 50V	451		MAG5011		
C705	1 50V 10%	102		CN0510		10TCC-V10
C706	.01 50V	451		MAG5011		
C708	.01 50V	451		MAG5011		
C710	.01 50V	451		MAG5011		
C711	.01 50V	451		MAG5011		
C712	130 NPO 50V	150		CN0315		10TCC-T15
C713	.01 50V	451		MAG5011		
C714	.01 50V	451		MAG5011		
C715	.01 50V	451		MAG5011		
C716	30 50V	126	NP033	CN0433	QCC2-22	10TCC-Q33
C717	150 50V	150		CN0315		10TCC-T15
C718	.01 50V	451		MAG5011		
C719	.01 50V	451		MAG5011		
C720	.1 50V 10%		WMF05P1	M192P1049R8	QFT2-215	1FT-P10
C721	82 50V	142	NP082	CN0482		10TCC-Q82
C722	150 50V	150		CN0315		10TCC-T15
C724	.01 50V	451		MAG5011		
C725	56 50V	136		GP456		10TS-Q56
C726	.047 50V 10%		DPMS2S47	M192P4739R8	QFT2-171	1FT-S47
C727	.01 50V	451		MAG5011		
C728	300	319	CD15FD301J03	SX330	QW1-38	MWB-301
C729	400	430				10TCW-T33
C730	20 50V	118	NP020	CN0420	QCC2-19	10TCC-Q20
C731	.01 50V	451		MAG5011		
C732	2 50V	104	NP02P2	CN0522		10TCC-V22
C733	130 50V	150		CN0315		10TCC-T15
C734	.01 50V	451		MAG5011		
C735	.01 50V	451		MAG5011		
C736	.01 50V	451		MAG5011		
C737	62 50V	137	NP068	CN0468		10TCC-Q68
C738	10pF	022-2812-004				

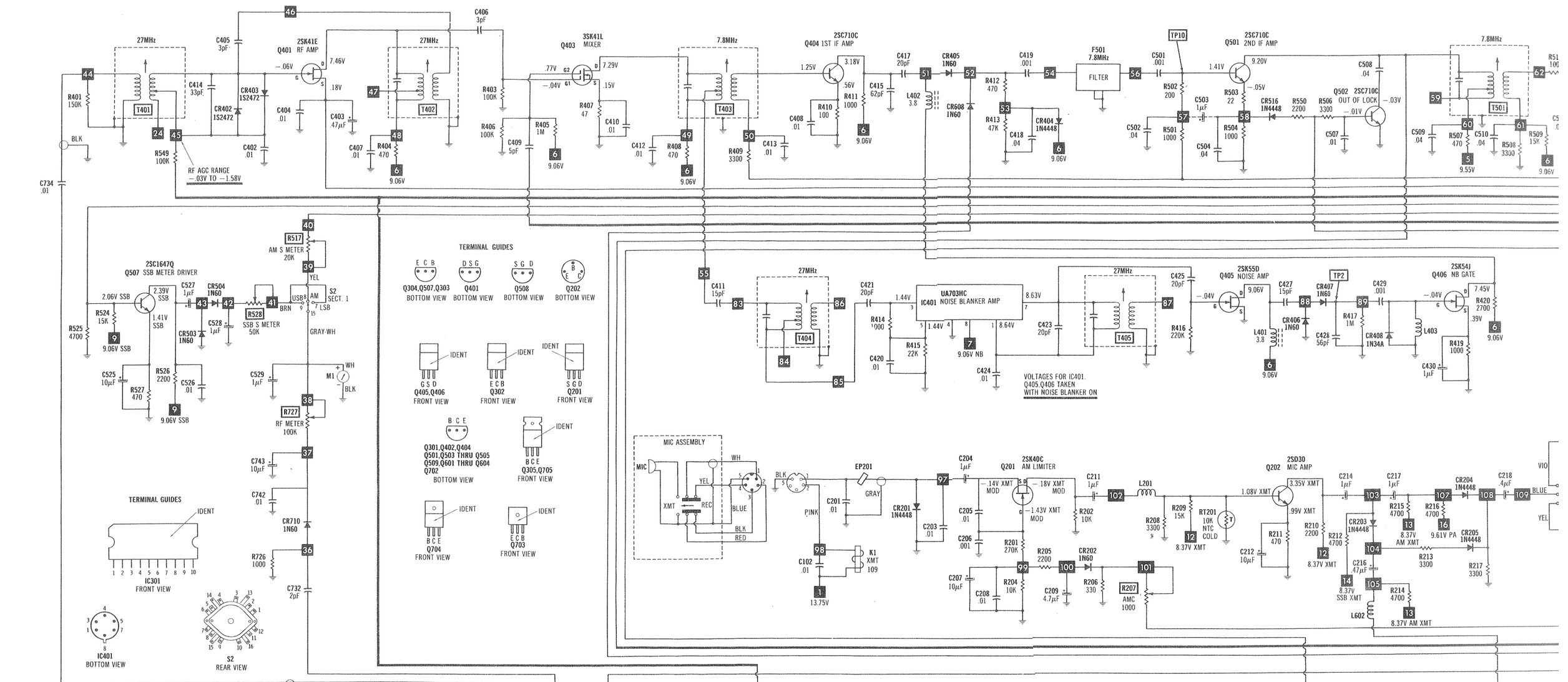

A PHOTOFACT STANDARD NOTATION SCHEMATIC WITH CIRCUITRACE™

MAIN SCHEMATIC

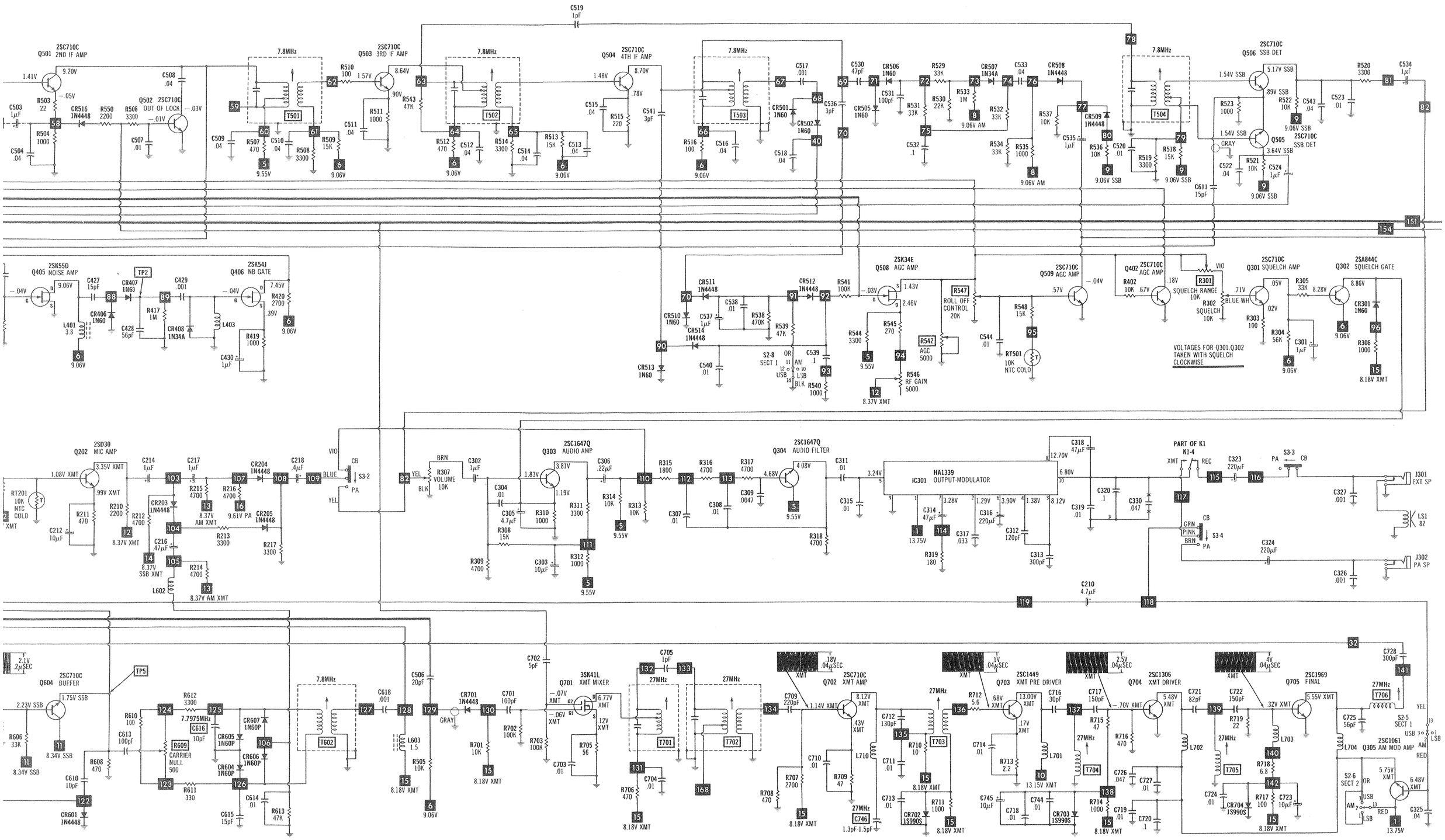
Q501 2SC710C 2ND IF AMP
Q502 2SC710C OUT OF LOCK
Q503 2SC710C 3RD IF AMP
Q504 2SC710C 4TH IF AMP
Q506 2SC710C SSB DET
Q505 2SC710C SSB DET
Q405 2SK55D NOISE AMP
Q406 2SK54J NB GATE
Q508 2SK34E AGC AMP
Q509 2SC710C AGC AMP
Q402 2SC710C AGC AMP
Q301 2SC710C SQUELCH AMP
Q302 2SA844C SQUELCH GATE
Q202 2SD30 MIC AMP
Q303 2SC1647Q AUDIO AMP
Q304 2SC1647Q AUDIO FILTER
IC301 HA1339 OUTPUT-MODULATOR
Q604 2SC710C BUFFER
Q701 3SK41L XMT MIXER
Q702 2SC710C XMT AMP
Q703 2SC1449 XMT PRE DRIVER
Q704 2SC1306 XMT DRIVER
Q705 2SC1969 FINAL
Q305 2SC1061 AM MOD AMP
7.8MHz
27MHz
VOLTAGES FOR Q301,Q302 TAKEN WITH SQUELCH CLOCKWISE
PART OF K1
K1-4
S3-2
S3-3
S3-4
S2-8 SECT 1
S2-5 SECT 1
S2-6 SECT 2
J301 EXT SP
J302 PA SP
LS1 8Z

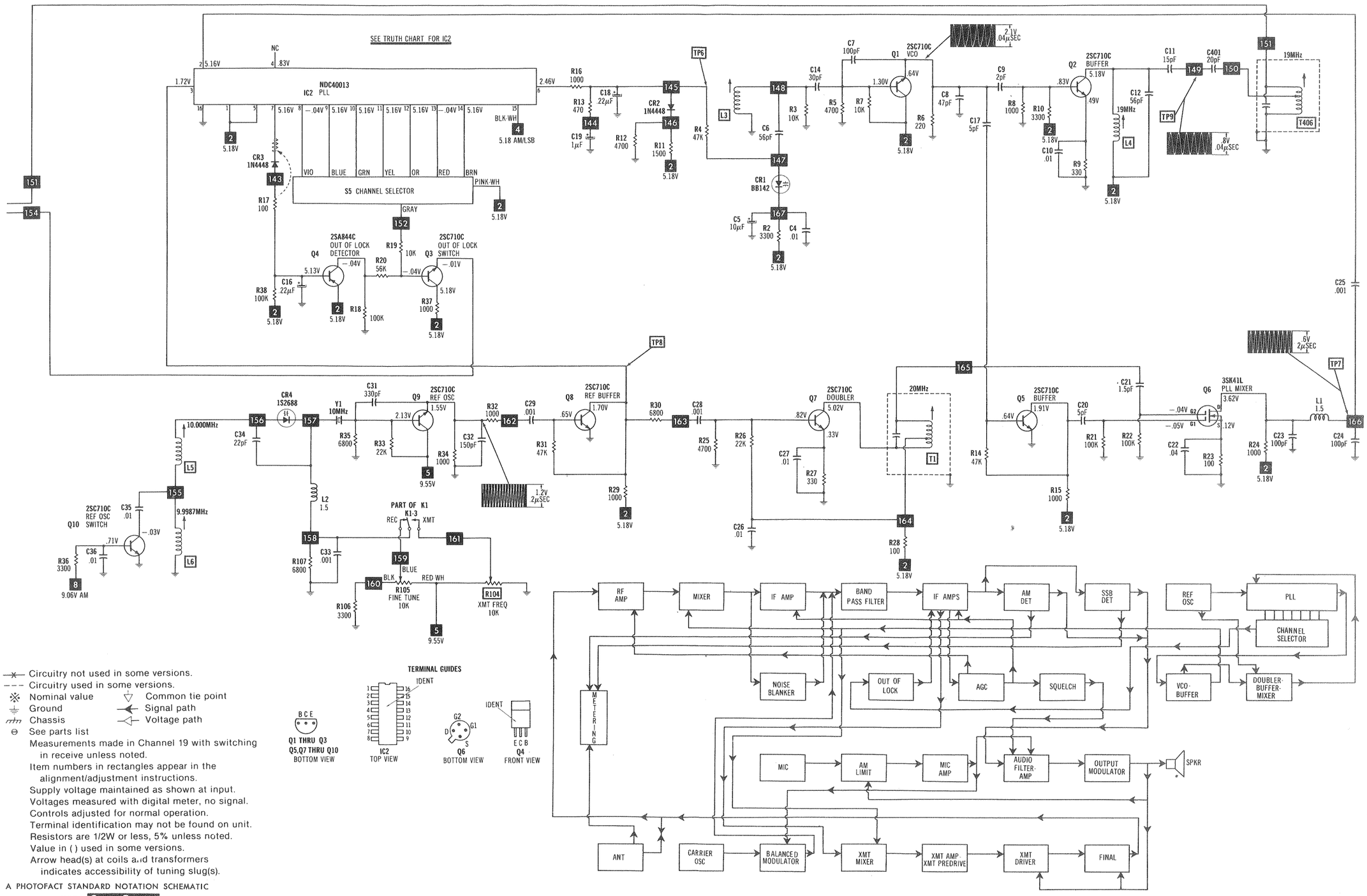

Circuitry not used in some versions.
Circuitry used in some versions.
Nominal value
Common tie point
Ground
Signal path
Chassis
Voltage path
See parts list
Measurements made in Channel 19 with switching in receive unless noted.
Item numbers in rectangles appear in the alignment/adjustment instructions.
Supply voltage maintained as shown at input.
Voltages measured with digital meter, no signal.
Controls adjusted for normal operation.
Terminal identification may not be found on unit.
Resistors are 1/2W or less, 5% unless noted.
Value in ( ) used in some versions.
Arrow head(s) at coils and transformers indicates accessibility of tuning slug(s).

A PHOTOFACT STANDARD NOTATION SCHEMATIC WITH CIRCUITRACE®

TERMINAL GUIDES

Q1 THRU Q3 Q5,Q7 THRU Q10 BOTTOM VIEW — B C E

IC2 TOP VIEW — IDENT

Q6 BOTTOM VIEW — G2 G1 D S

Q4 FRONT VIEW — IDENT E C B

PLL SCHEMATIC

PARTS LIST AND DESCRIPTION (CONTINUED)

(When ordering parts, state Model, Part Number, and Description.)

CAPACITORS (cont)

ITEM No.	RATING	MFGR. PART No.	REPLACEMENT DATA			
			CORNELL-DUBILIER PART No.	MALLORY PART No.	SPRAGUE PART No.	
					Q-LINE	GENERAL LINE
C739	100 50V		NP0100	CN0310		10TCC-T10
C741	.1 50V 10%		WMF05P1	M192P1049R8	QFT2-215	1FT-P10
	.01 50V			MAG5011		
C742	.01 50V			MAG5011		
C744	.01 50V			MAG5011		
C746	1.3pF-1.5pF					
C801	.04		DPMS2S5	EWF1A150		2PS-S50
C802	.04		DPMS2S5	EWF1A150		2PS-S50
C803	.04		DPMS2S5	EWF1A150		2PS-S50
C804	.04		DPMS2S5	EWF1A150		2PS-S50
C805	.04		DPMS2S5	EWF1A150		2PS-S50
C806	.01 50V			MAG5011		
C807	.01 50V			MAG5011		
C808	.01 50V			MAG5011		
C809	.1 50V			MAG5001		
	.01 50V			MAG5011		
C810	.01 50V			MAG5011		

CONTROLS (All wattages 1/2 watt, or less, unless listed)

ITEM No.	FUNCTION	RESISTANCE	REPLACEMENT DATA		
			MFGR. PART No.	MALLORY PART No.	TRW PART No.
R104	XMT Freq.	10K	022-2862-012	MTC14L1	X201R103B
R105	Fine Tune	10K	022-2862-004		
R207	AMC	1000	022-2862-006	MTC13L1	X201R102B
R301	Squelch Range	10K	022-2862-007	MTC14L1(2)	X201R103B(2)
R302	Squelch	10K	022-2862-002		
R307	Volume/Power Switch	10K	022-2862-001		
R517	AM S Meter	20K	022-2862-008	MTC24L1(2)	X201R253B(2)
R528	SSB S Meter	50K		MTC54L1(2)	X201R503B(2)
R542	AGC	5000	022-2862-013	MTC53L1(2)	X201R502B(2)
R546	RF Gain	5000	022-2862-003		
R547	Roll Off Control	20K	022-2862-501	MTC24L1	X201R253B
R609	Carrier Null	500	022-2862-010	MTC52L1	X201R501B
R725	ALC	10K	022-2862-012	MTC14L1	X201R103B
R727	RF Meter	100K	022-2862-009	MTC15L1(2)	X201R104B(2)

(2) Cut off one of the end terminals and bend to fit P.C. board.

RESISTORS (Power and Special)

ITEM No.	RATING	REPLACEMENT DATA	
		MFGR. PART No.	WORKMAN PART No.
RT201	10K Cold NTC	022-2869-005	

ITEM No.	RATING	REPLACEMENT DATA	
		MFGR. PART No.	WORKMAN PART No.
RT501	10K Cold NTC	022-2869-005	

COILS (RF-IF)

ITEM No.	FUNCTION	REPLACEMENT DATA			REMARKS
		PART No.	OTHER IDENTIFICATION	MILLER PART No.	
L1	Pi Filter (100uH)	022-2842-501			
L2	RF Choke (150uH)	022-2842-003			
L3	VCO (19MHz)	022-2842-503	Z368N		
L4	VCO Buffer (19MHz)	022-2842-504	C354N		
L5	REF Osc. (10MHz)	022-2842-505	Y369N		
L6	REF Osc. (9.998MHz)	022-2842-506	Y370N		
L201	RF Choke (22uH)	022-2842-502			
L401	RF Choke (470uH)	022-2842-002			
L402	RF Choke (470uH)	022-2842-002			
L403	RF Choke (130mH)	022-2842-507			
L601	RF Choke (22uH)	022-2842-502			
L602	RF Choke (22uH)	022-2842-502			
L603	RF Choke (150uH)	022-2842-003			
L701	RF Choke (.65uH)	022-2842-006			
L702	RF Choke (.65uH)	022-2842-006			
L703	RF Choke (1.2uH)	022-2842-008			
L704	RF Choke (.22uH)	022-2842-005			
L705	RF Choke (27MHz)	022-2842-007	C997N		
L706	RF Choke (22uH)	542-3002-002		74F225AI	
L707	RF Choke (22uH)	542-3002-002		74F225AI	
L708	XMT Ant. (.22uH)	002-2842-005			
L709	TVI Trap (.65uH)	022-2842-006			
L710	RF Choke				
T1	Doubler (20MHz)	022-2892-501	Z177Z	CBS133-TC	
T401	REC Antenna (27MHz)	022-2892-502	C365Z		
T402	REC RF (27MHz)	022-2892-003	C187A	CBS516-7TC	
T403	REC Mixer (27MHz)	022-2892-002	S183A	CBS516-7TC	
T404	REC Mixer (27MHz)	022-2892-002	S183A	CBS516-7TC	
T405	Noise Blanker (27MHz)	022-2892-002	S183A	CBS516-7TC	
T406	Buffer (19MHz)	022-2892-501	Z177Z	CBS133-TC	
T501	IF (7.8MHz)	022-2892-002	S183A	CBS516-7TC	
T502	IF (7.8MHz)	022-2892-002	S183A	CBS516-7TC	
T503	IF (7.8MHz)	022-2892-001	S190A	CBS517-7TC	
T504	IF (7.8MHz)	022-2892-005	S185Z		
T601	Carrier Osc. (7.7975MHz)	022-2892-503	Y372N		
T602	Balanced Mod. (7.8MHz)	022-2892-007	S111D	CBS771	
T701	XMT Mixer (27MHz)	022-2892-014	C181Z	CBS136-TC	
T702	XMT Mixer (27MHz)	022-2892-015	C182Z	CBS706-TC	

PARTS LIST AND DESCRIPTION (CONTINUED)

(When ordering parts, state Model, Part Number, and Description.)

COILS (RF-IF) (cont)

ITEM No.	FUNCTION	REPLACEMENT DATA			REMARKS
		PART No.	OTHER IDENTIFICATION	MILLER PART No.	
T703	XMT Amp (27MHz)	022-2892-016	C042Z		
T704	XMT Predriver (27MHz)	022-2892-017	C979N		
T705	XMT Driver (27MHz)	022-2892-018	C996N		
T706	Final (27MHz)	022-2892-019	C043N	CB140(1)	

(1) Cut off unwanted terminals and rotate replacement to use the two terminals required.

FILTER CHOKE

ITEM No.	RATINGS			REPLACEMENT DATA			NOTES
	CURRENT (Measured)	DC RES.	INDUCTANCE (0 CURRENT 1000~)	MFGR. PART No.	THORDARSON PART No.	TRIAD PART No.	
L101	2.4A	.22	1.6mH	022-2842-001	TR555		

SPEAKER

ITEM No.	TYPE	REPLACEMENT DATA		NOTES
		MFGR. PART No.	QUAM PART No.	
LS1	3" PM, 8 Ohms	022-2889-001	30A05Z8R	

FUSE DEVICES

ITEM No.	DESCRIPTION	REPLACEMENT DATA						
		PART No.		BUSS PART No.		LITTELFUSE PART No.		WORKMAN PART No.
		DEVICE	HOLDER	DEVICE	HOLDER	DEVICE	HOLDER	DEVICE
F101	4A Quick-acting		534-1004-005	AGC4	HRK	312004	150145	FG4-2
	3A Quick-acting	534-0003-026	534-1004-005	AGC3	HRK	312003	150145	FG3-2

MISCELLANEOUS

ITEM No.	PART NAME	PART No.	NOTES
DS101	Lamp	022-2849-001	Channel Indicator
DS102	Lamp	022-2849-002	Meter
DS103	Lamp	022-2849-002	USB Indicator
DS104	Lamp	022-2849-002	AM Indicator
DS105	Lamp	022-2849-002	LSB Indicator
DS106	Lamp	022-2849-003	REC
DS107	Lamp		XMT
EP201	Ferrite Bead	517-2001-001	
F501	Filter	022-2832-501	7.8MHz
J301	Jack	022-2815-001	EXT SPKR
J302	Jack	022-2815-001	PA SPKR
J701	Jack	515-3003-001	Antenna
K1	Relay	022-2867-001	XMT/REC
M1	Meter	022-2854-001	S/RF
S1	Switch	022-2862-001	Power (On Volume Control)
S2	Switch	022-2883-002	USB/AM/LSB
S3	Switch	022-2883-003	CB/PA
S4	Switch	022-2883-004	NB/On
S5	Switch	022-2883-501	Channel Select
Y1	Crystal	022-2820-501	10.000MHz
Y601	Crystal	022-2820-502	7.8015MHz
	P.C. Board	022-2835-501	Main
	P.C. Board	022-2835-502	PLL

CABINETS & CABINET PARTS (When ordering specify model, chassis & color)

ITEM	PART No.
Cabinet	022-2817-009
Panel, Front	022-2832-001
Panel, Rear	022-2817-507

ITEM	PART No.
Dial	022-2832-002
Knob, Fine Tune/RF Gain/Volume/ Squelch/Mode	547-0014-002
Knob, Channel Select	547-0014-001