For Supplier Address See PHOTOFACT Index

NOTE

Repair or adjustment of transmitter circuits must be under supervision of a person with first-or second-class radiotelephone license.
(Refer to FCC Rules and Regulations Part 95, Subpart C & D.)

The frequency of the transmitter should be checked periodically with a secondary frequency standard to insure proper and legal operation.

Best results will be obtained when adjusting the final RF output circuit if the antenna normally used is connected and the chassis is as nearly in the cabinet as possible.

Connect either 50-ohm dummy load or the normally used antenna system.

MODEL 5001 (77-005)

MANUFACTURER'S SPECIFICATIONS

General:

Voltage . . . . . 13.8 V, Positive/ Negative Ground Operating Range: 10 V to 16 V.
Frequency Stability . . . ±.005%.
Temperature Range . . . -30° to +50°C (Per FCC Part 15).
Humidity . . . . . 5-90%.
Vibration . . . . . EIA Standard RS-424.
Shock . . . . . EIA Standard RS-424.

Receiver (AM):

Sensitivity. —
Less than 0.7 uv for 10 dB SN +N to N.

Automatic Gain Control Figure of Merit. —
80 dB.

Audio Squelch Sensitivity. —
Threshold: Less than 10 dB SN+N to N Ratio.
Tight: 100 uv minimum, 500 uv maximum.

Adjacent Channel Selectivity and Desensitization. —
60 dB (Two-generator method).

Spurious Response Attenuation. —
60 dB (excluding image at 50 dB).

Audio Power Output. —
4 W @ 10% distortion (load impedance 8 ohms resistive).

Audio Frequency Response (1 KHz, 0 dB reference). —
300 Hz @ -6 dB.
1000 Hz @ 0 dB.
3000 Hz @ -6 dB.

Hum and Noise, Squelched. —
-45 dB.

Noise Limiting. —
Provided with Switchable ANL and noise blanker.

S Meter Sensitivity at "S-9" —
100 uv.

RF Gain Range. —
30 dB.

Antenna Input Impedance. —
50 ohms, unbalanced

Transmitter (AM):

Carrier Power, No Modulation. —
4 W maximum, 3.6 minimum.

Conducted Spurious Emissions. —
-65 dB.

Radiated Spurious Emissions. —
(FCC Part 95)

Audio Frequency Harmonic Distortion. —
10% maximum @ 80%

Audio Frequency Response (1 KHz, 0 dB reference). —
300 Hz @ -6 dB.
1000 Hz a 0 dB.
3000 Hz @ -6 dB.
6 dB/octave falling above 3000 Hz.

Hum and Noise. —
-40 dB.

Output Impedance. —
50 ohms, unbalanced.

Output Protection. —
Withstands for 5 minutes all VSWR around Smith Chart at 20:1 without damage or failure.

Output Stability. —
Shall not exceed FCC Spurious emission requirements when operated into a mismatch load with 5:1 VSWR at any point on the Smith Chart.

Courtesy of the Manufacturer

HOWARD W. SAMS & CO., INC. Indianapolis, Indiana 46206

ALIGNMENT INSTRUCTIONS

CAUTION: Use isolation transformer or observe polarity when connecting test equipment.
Maintain line voltage at 120V AC. Allow a 15-minute warm-up period.
Adjustments made with 13.8 volt DC input.
Connect low sides of test equipment to ground unless specified otherwise.
Connect 50-ohm dummy load or antenna before keying transmitter.
Connect microphone.

Suggested Alignment Tools:	GC ELECTRONICS:
T1 thru T8	9440
T9, T10, T11	5000, 5009, 8276, 8728, 8728A, 9089
CT1	5000, 8276, 9089
L5	9300, 9302, 9304

SYNTHESIZER ALIGNMENT

TEST EQUIPMENT	TRANSCEIVER	ADJUST	REMARKS
Input of frequency counter to TP1 (Q8 Base).	Ch. 19		Check for 10.240MHz ±150Hz.
Input of DC meter to TP (Junction of R8 and R9).	Ch. 1	T1	Adjust for 2.00 volts ±.1 volt. The voltage on channel 40 should be between 3.60 volts to 4.60 volts.
Input of DC meter to TP (Junction of R8 and R9).	Ch. 1, XMT	CT1	Adjust for 2.00 volts ±.2 volt. The voltage on channel 40 should be between 3.30 volts to 4.60 volts.
Input of frequency counter to TP4 (IC2 Pin 9).	Ch. 1		Check for 6.030MHz. Check all channels. (See Truth Chart for correct frequencies.)
Input of frequency counter to TP4 (IC2 Pin 9).	Ch. 1, XMT		Check for 3.2425MHz. Check all channels. (See Truth Chart for correct frequencies.)
Input of frequency counter to TP5 (Junction of T1 and C21).	Ch. 1		Check for 16.270MHz. Check all channels. (See Truth Chart for correct frequencies.)
Input of frequency counter to TP5 (Junction of T1 and C21).	Ch. 1, XMT		Check for 13.4825MHz. Check all channels. (See Truth Chart for correct frequencies.)

RECEIVER ALIGNMENT

Connect an AC VTVM or AF wattmeter across speaker voice coil.
Adjust volume control to obtain a suitable indication.
Set generator output low enough to prevent AGC limiting.
Squelch MINIMUM, RF Gain Maximum, Mic Gain Maximum, NB/ANL Off, 19/9/NOR NOR

TEST EQUIPMENT	TRANSCEIVER	ADJUST	REMARKS
Output of signal generator thru .01uF to TP1 (Q8 Base). 455kHz, 1000Hz @ 30% modulation.	Ch. 19	T11, T10	Adjust for maximum output.
Output of signal generator to antenna input. 27.185MHz, 1000Hz @ 30% modulation	Ch. 19	T5, T6, T7 T8, T9	Adjust for maximum output. Readjust T10 and T11 for maximum.

RECEIVER ADJUSTMENTS

Connect an AC VTVM or AF wattmeter across speaker voice coil.
Adjust volume control to obtain a suitable indication.
Squelch MINIMUM, RF Gain Maximum, Mic Gain Maximum, NB/ANL Off, 19/9/NOR NOR

TEST EQUIPMENT	TRANSCEIVER	ADJUST	REMARKS
Output of signal generator to antenna input. 27.185MHz, 1000Hz @ 30% modulation Output 500uV.	Ch. 19 Squelch Maximum	RV1	SQUELCH RANGE Adjust so squelch just breaks.
Output of signal generator to antenna input. 27.185MHz, 1000Hz @ 30% modulation Output 100uV.	Ch. 19	RV3	S METER Adjust for 9 on S scale of meter.

TRANSMITTER ALIGNMENT

Connect an RF wattmeter and 50-ohm, 25-watt dummy load to antenna connector.
NOTE: Be sure to check transmit frequency and power on all active channels after alignment of transmitter.
See page 4 for channel frequencies.

TEST EQUIPMENT	TRANSCEIVER	ADJUST	REMARKS
Input of oscilloscope to TP3 (Q3 Base).	Ch. 19, XMT	T2, T3, T4	Adjust for maximum RF output. (2.00 volts p-p typical.) See Figure 1.
Input of RF wattmeter to antenna input.	Ch. 19, XMT	L5	Adjust for maximum RF output.
Input of RF wattmeter to antenna input.	Ch. 19, XMT	L10	Adjust for 4.3 watts RF output.
Input of RF wattmeter to antenna input.	Ch. 19, XMT	L5	Turn core clockwise for 3.8 watts RF output.

TRANSMITTER ADJUSTMENTS

Connect an RF wattmeter and 50-ohm, 25-watt dummy load to antenna connector.
NOTE: Be sure to check transmit frequency and power on all active channels after adjustment of transmitter.
See page 4 for channel frequencies.

TEST EQUIPMENT	TRANSCEIVER	ADJUST	REMARKS
Input of oscilloscope or modulation meter to antenna input. Inject a 1000Hz, 15mV signal at Mic input.	Ch. 19, XMT	RV2	AMC Adjust for 90% modulation. (See Figure 2.)
Input of RF wattmeter to antenna input.	Ch. 19, XMT	L2	RF POWER METER Adjust so Power Meter reads in red area with 3.8 watts RF output.
Connect a 150-ohm, 5 watt dummy load to antenna connector.	Ch. 19, XMT	RV502	SWR Put S4 in CAL and calibrate SWR meter with calibrate control. Put S4 in SWR and adjust for an SWR reading of 3.
Connect a 250-ohm, 5 watt dummy load to antenna connector.	Ch. 19, XMT	RV501	AWI Adjust till AWI light just turns on.

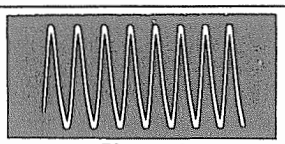
Figure 1

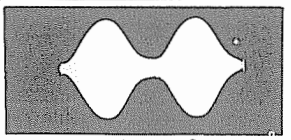
Figure 2

TRUTH CHART

CHANNEL	1 = 5.64 Volts 0 = 0 Volts IC1 PROGRAM DIVIDER PINS 9	10	11	12	13	14	15		REC VCO OUTPUT IN MHz AT TP5	XMT VCO OUTPUT IN MHz AT TP5	REC VCO OUTPUT IN MHz AT TP4	XMT VCO OUTPUT IN MHz AT TP4
1	1	0	0	1	0	1	0		16.270	13.4825	6.030	3.2425
2	1	0	0	1	0	0	1		16.280	13.4875	6.040	3.2475
3	1	0	0	1	0	0	0		16.290	13.4925	6.050	3.2525
4	1	0	0	0	1	1	0		16.1210	13.5025	6.070	3.2625
5	1	0	0	0	1	0	1		16.320	13.5075	6.080	3.2675
6	1	0	0	0	1	0	0		16.330	13.5125	6.090	3.2725
7	1	0	0	0	0	1	1		16.340	13.5175	6.100	3.2775
8	1	0	0	0	0	0	1		16.360	13.5275	6.120	3.2875
9	1	0	0	0	0	0	0		16.370	13.5325	6.130	3.2925
10	0	1	1	1	1	1	1		16.380	13.5375	6.140	3.2975
11	0	1	1	1	1	1	0		16.390	13.5425	6.150	3.3025
12	0	1	1	1	1	0	0		16.410	13.5525	6.170	3.3125
13	0	1	1	1	0	1	1		16.420	13.5575	6.180	3.3175
14	0	1	1	1	0	1	0		16.430	13.5625	6.190	3.3225
15	0	1	1	1	0	0	1		16.440	13.5675	6.200	3.3275
16	0	1	1	0	1	1	1		16.460	13.5775	6.220	3.3375
17	0	1	1	0	1	1	0		16.470	13.5825	6.230	3.3425
18	0	1	1	0	1	0	1		16.480	13.5875	6.240	3.3475
19	0	1	1	0	1	0	0		16.490	13.5925	6.250	3.3525
20	0	1	1	0	0	1	0		16.510	13.6025	6.270	3.3625
21	0	1	1	0	0	0	1		16.520	13.6075	6.280	3.3675
22	0	1	1	0	0	0	0		16.530	13.6125	6.290	3.3725
23	0	1	0	1	1	0	1		16.560	13.6275	6.320	3.3875
24	0	1	0	1	1	1	1		16.540	13.6175	6.300	3.3775
25	0	1	0	1	1	1	0		16.550	13.6225	6.310	3.3825
26	0	1	0	1	1	0	0		16.570	13.6325	6.330	3.3925
27	0	1	0	1	0	1	1		16.580	13.6375	6.340	3.3975
28	0	1	0	1	0	1	0		16.590	13.6425	6.350	3.4025
29	0	1	0	1	0	0	1		16.600	13.6475	6.360	3.4075
30	0	1	0	1	0	0	0		16.610	13.6525	6.370	3.4125
31	0	1	0	0	1	1	1		16.620	13.6575	6.380	3.4175
32	0	1	0	0	1	1	0		16.630	13.6625	6.390	3.4225
33	0	1	0	0	1	0	1		16.640	13.6675	6.400	3.4275
34	0	1	0	0	1	0	0		16.650	13.6725	6.410	3.4325
35	0	1	0	0	0	1	1		16.660	13.6775	6.420	3.4375
36	0	1	0	0	0	1	0		16.670	13.6825	6.430	3.4425
37	0	1	0	0	0	0	1		16.680	13.6875	6.440	3.4475
38	0	1	0	0	0	0	0		16.690	13.6925	6.450	3.4525
39	0	0	1	1	1	1	1		16.700	13.6975	6.460	3.4575
40	0	1	1	1	1	0	0		16.710	13.7025	6.470	3.4625

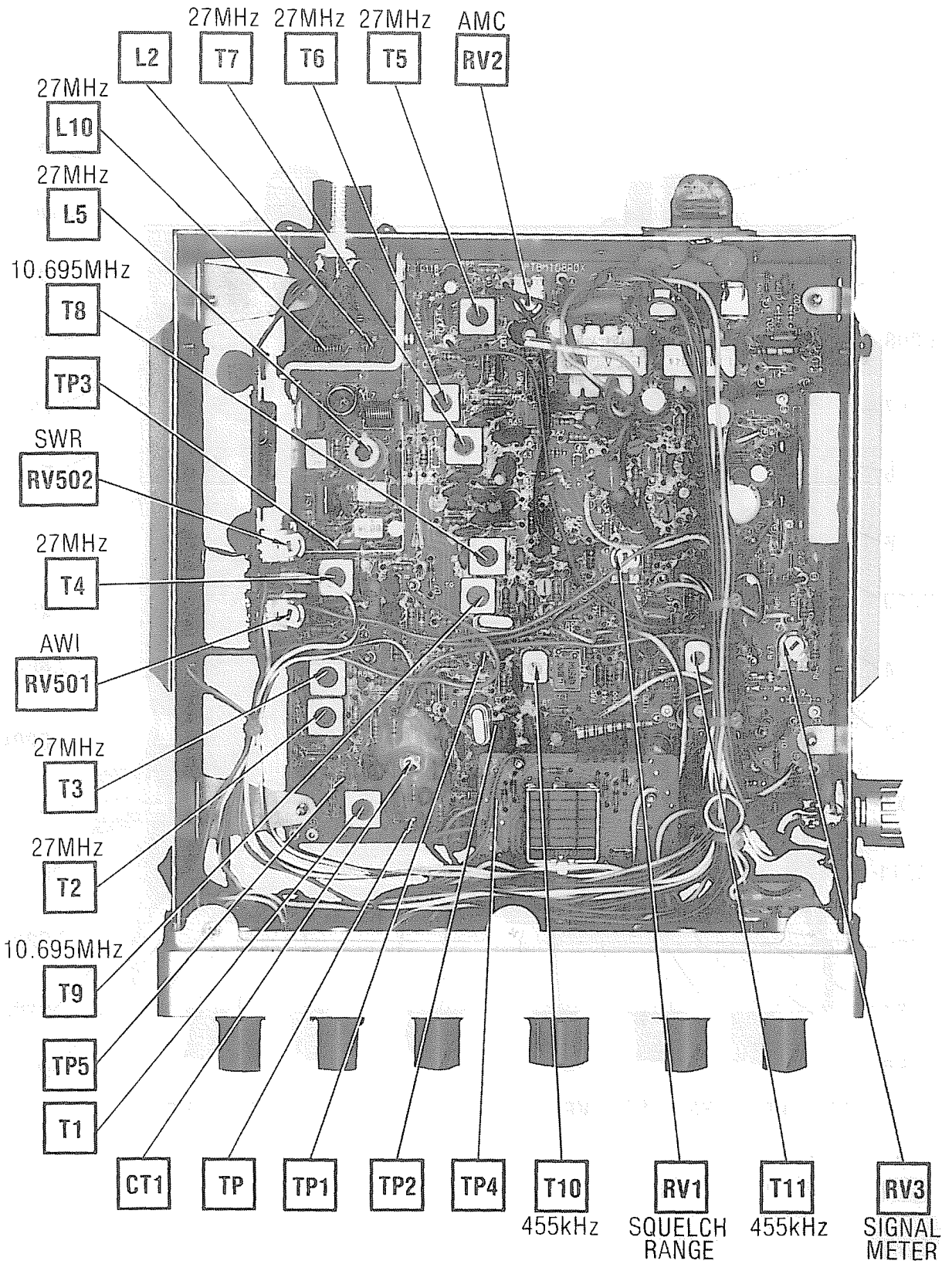

CHASSIS-TOP VIEW

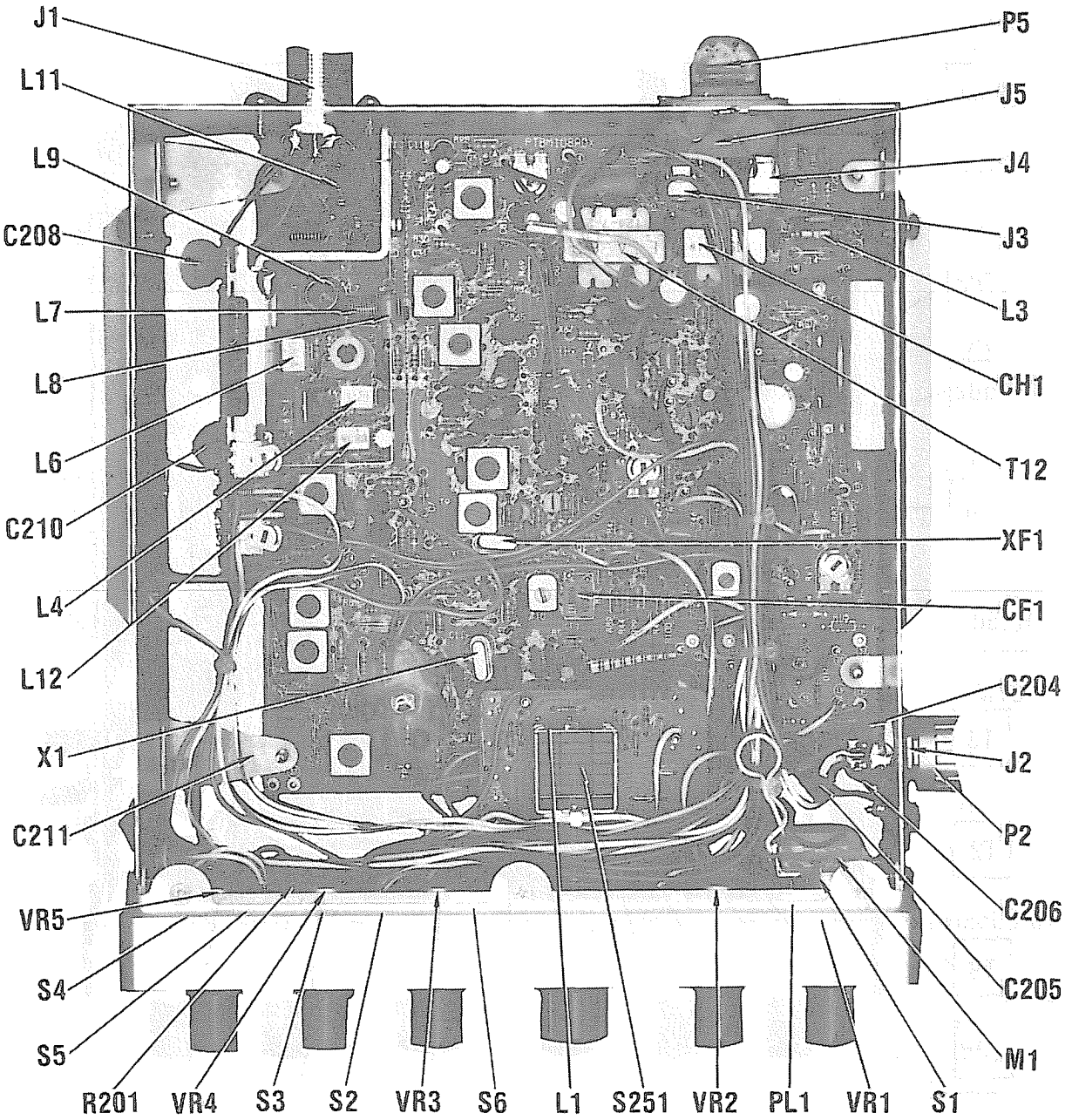

CHASSIS-TOP VIEW

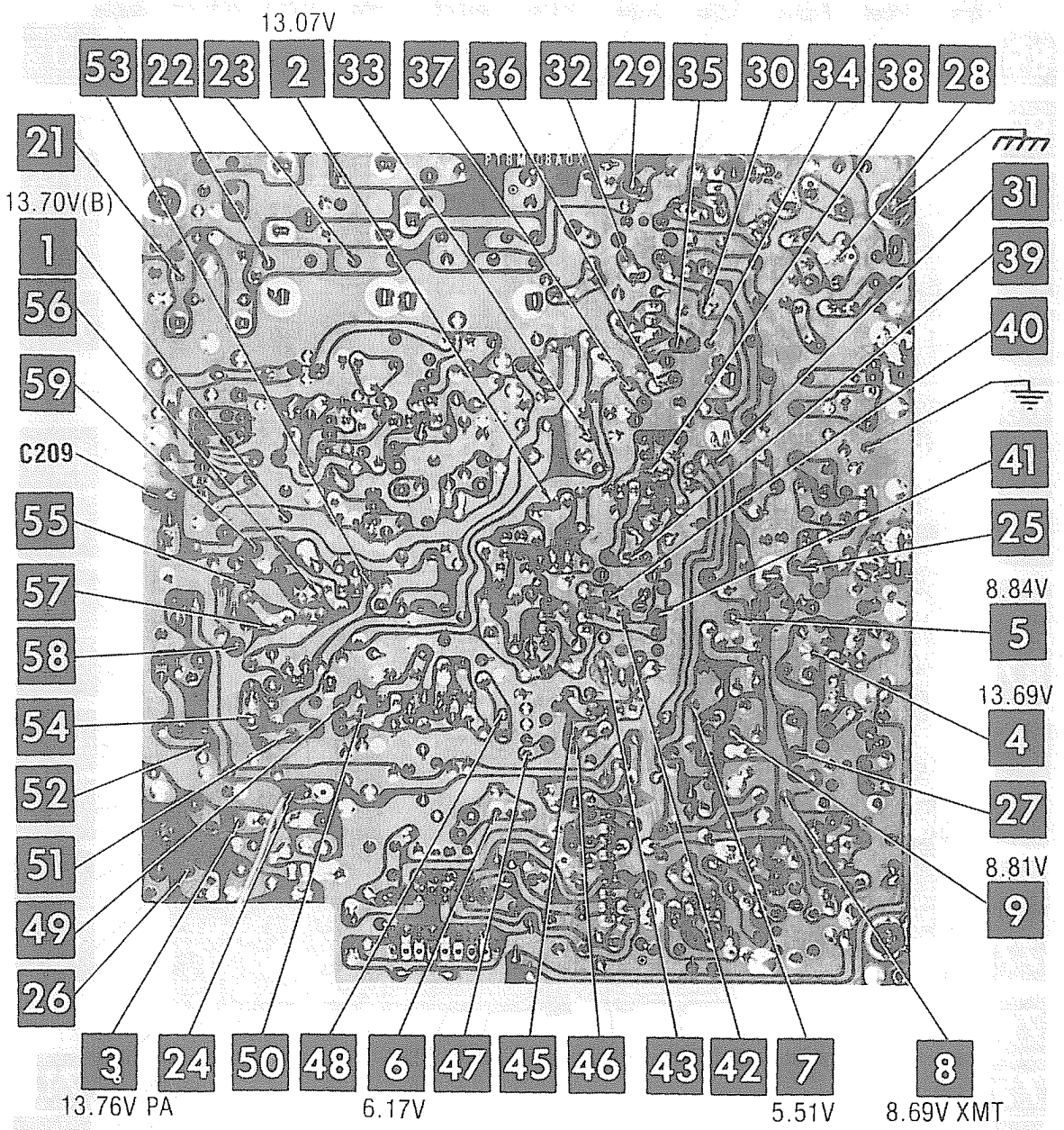
13.07V
53
22
23
2
33
37
36
32
29
35
30
34
38
28
21
13.70V(B)
1
56
59
C209
55
57
58
54
52
51
49
26
31
39
40
41
25
8.84V
5
13.69V
4
27
8.81V
9
3
24
50
48
6
47
45
46
43
42
7
8
13.76V PA
6.17V
5.51V
8.69V XMT

MAIN BOARD

A Howard W. Sams CIRCUITRACE® Photo

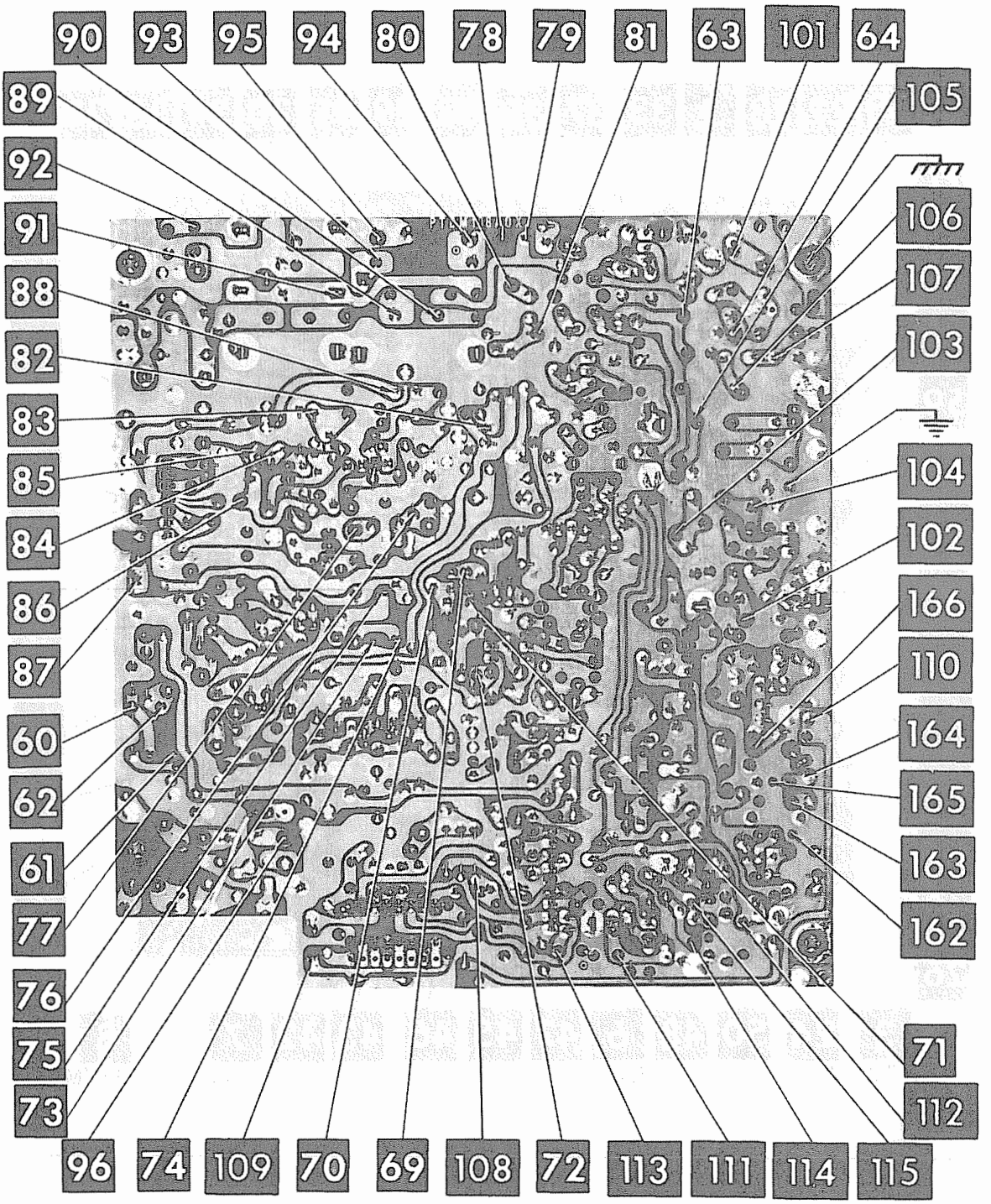

MAIN BOARD

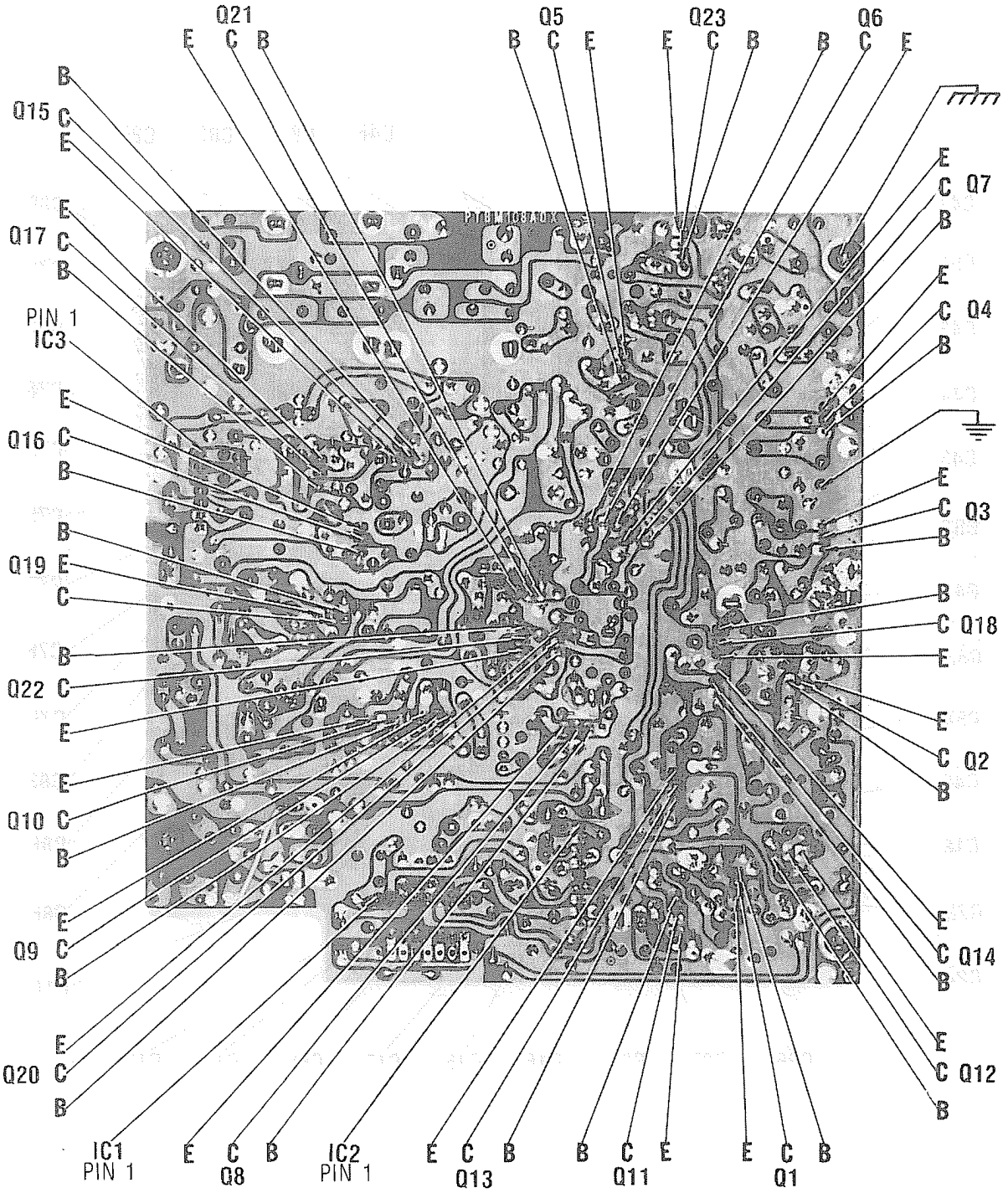

MIDLAND MODEL 5001 (77-005)

MAIN BOARD

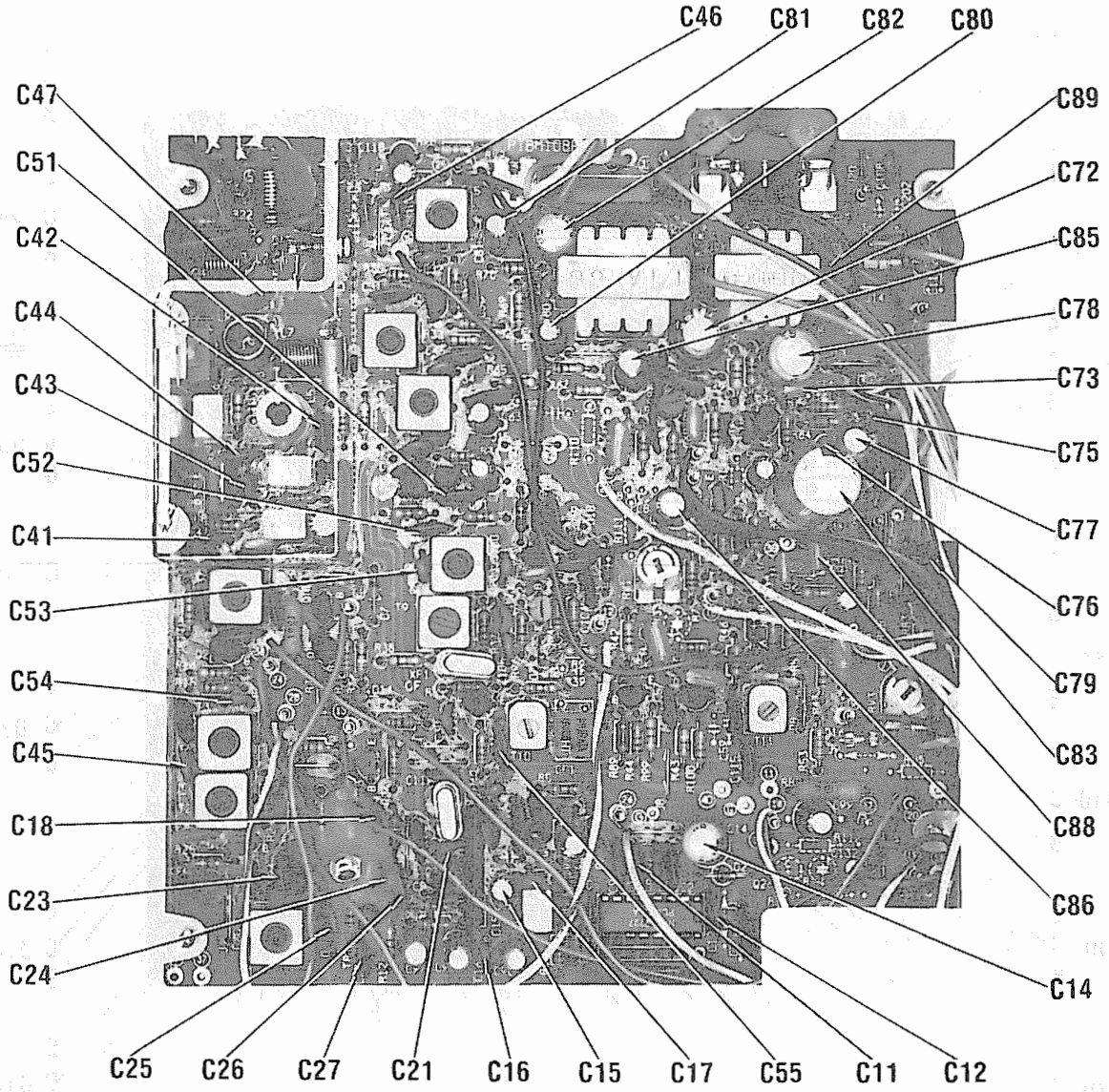
C46
C81
C82
C80
C47
C89
C51
C72
C42
C85
C44
C78
C43
C73
C52
C75
C41
C77
C53
C76
C54
C79
C45
C83
C18
C88
C23
C86
C24
C14
C25
C26
C27
C21
C16
C15
C17
C55
C11
C12

MAIN BOARD

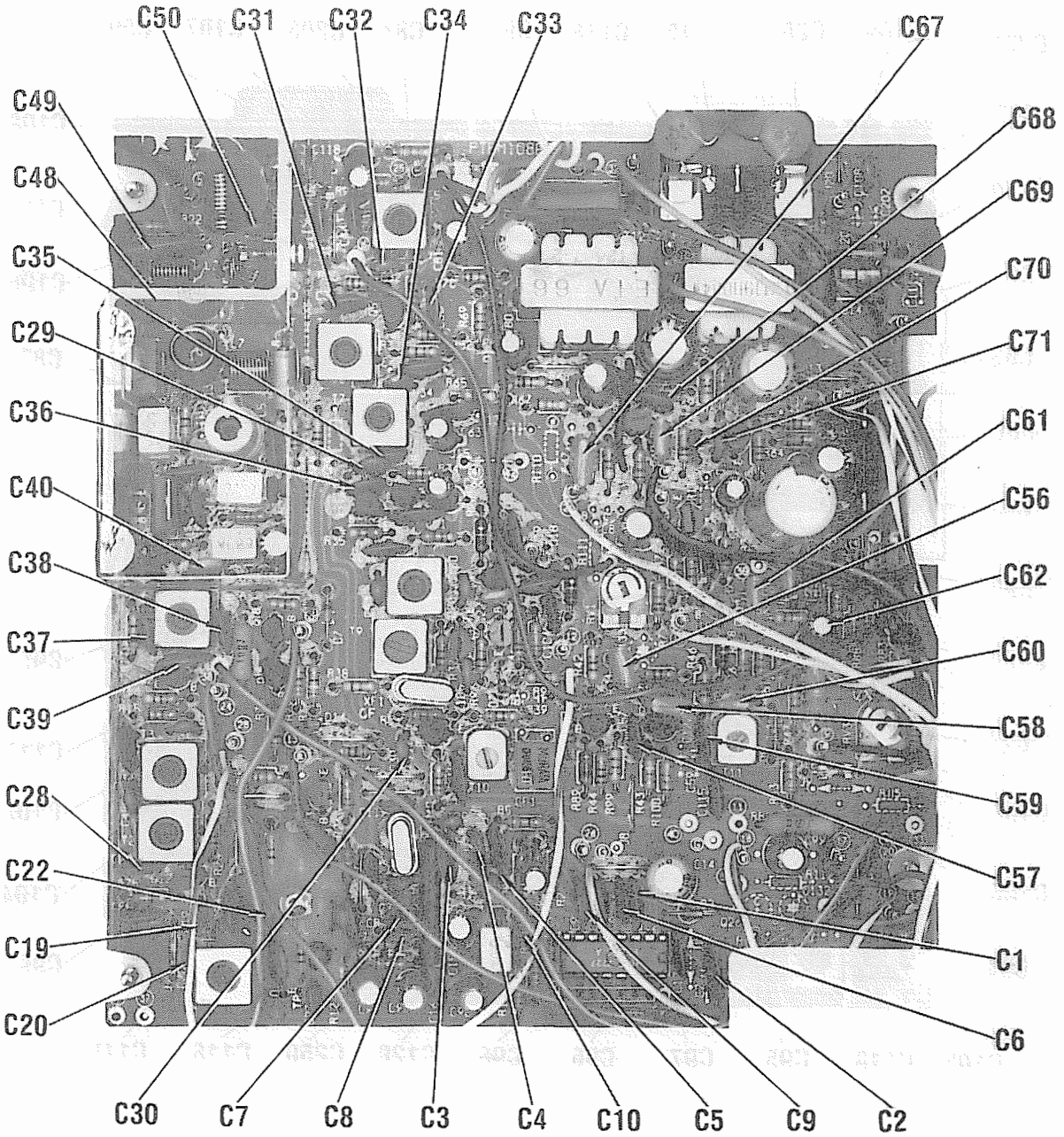
C50
C31
C32
C34
C33
C67
C49
C68
C48
C69
C35
C70
C29
C71
C36
C61
C40
C56
C38
C62
C37
C60
C39
C58
C28
C59
C22
C57
C19
C1
C20
C6
C30
C7
C8
C3
C4
C10
C5
C9
C2

MAIN BOARD

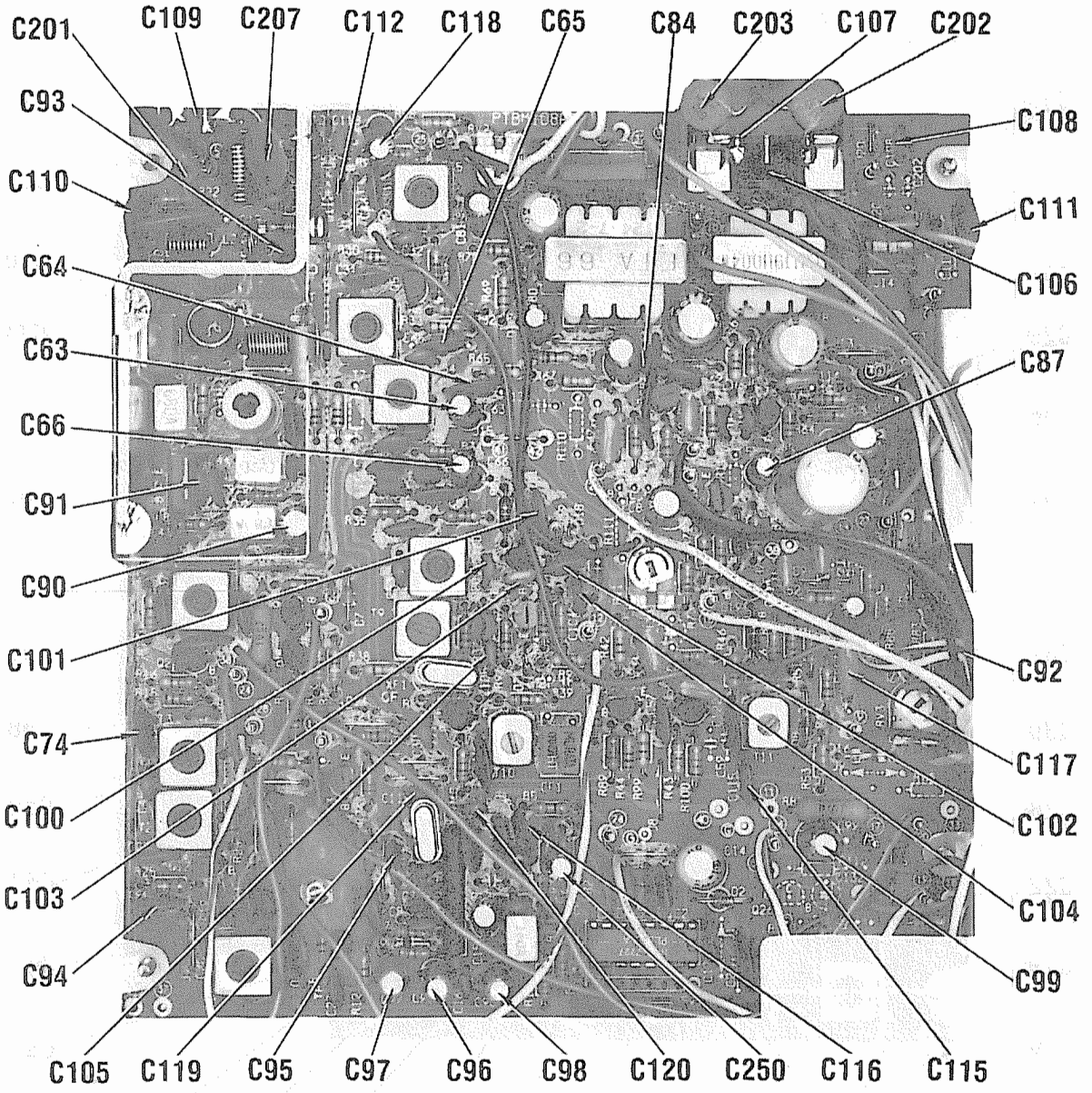
C201
C109
C207
C112
C118
C65
C84
C203
C107
C202
C93
C108
C110
C111
C64
C106
C63
C87
C66
C91
C90
C101
C92
C74
C117
C100
C102
C103
C104
C94
C99
C105
C119
C95
C97
C96
C98
C120
C250
C116
C115

MAIN BOARD

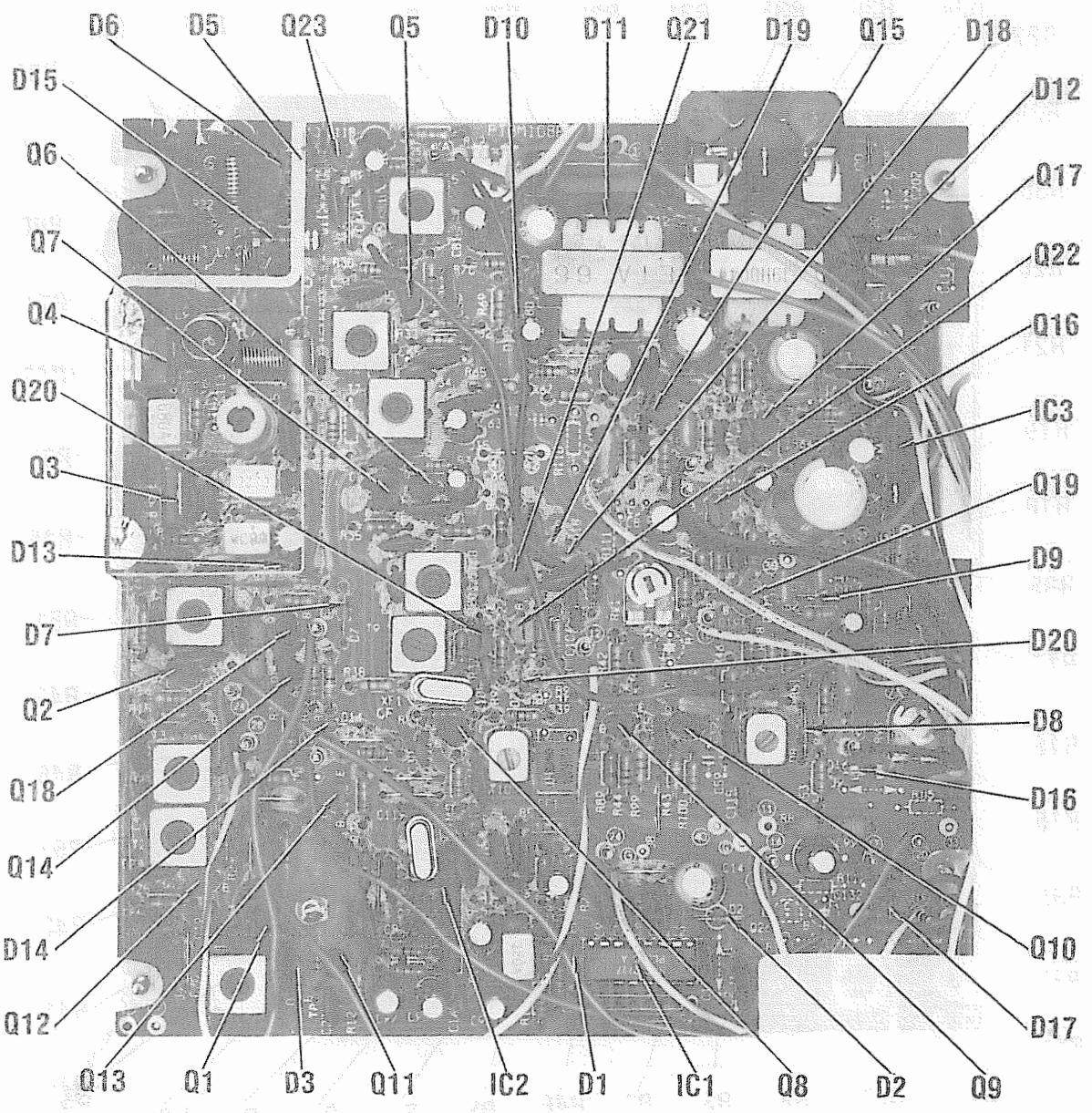
D6
D5
Q23
Q5
D10
D11
Q21
D19
Q15
D18
D15
D12
Q6
Q17
Q7
Q22
Q4
Q16
Q20
IC3
Q3
Q19
D13
D9
D7
D20
Q2
D8
Q18
D16
Q14
D14
Q10
Q12
D17
Q13
Q1
D3
Q11
IC2
D1
IC1
Q8
D2
Q9

MAIN BOARD

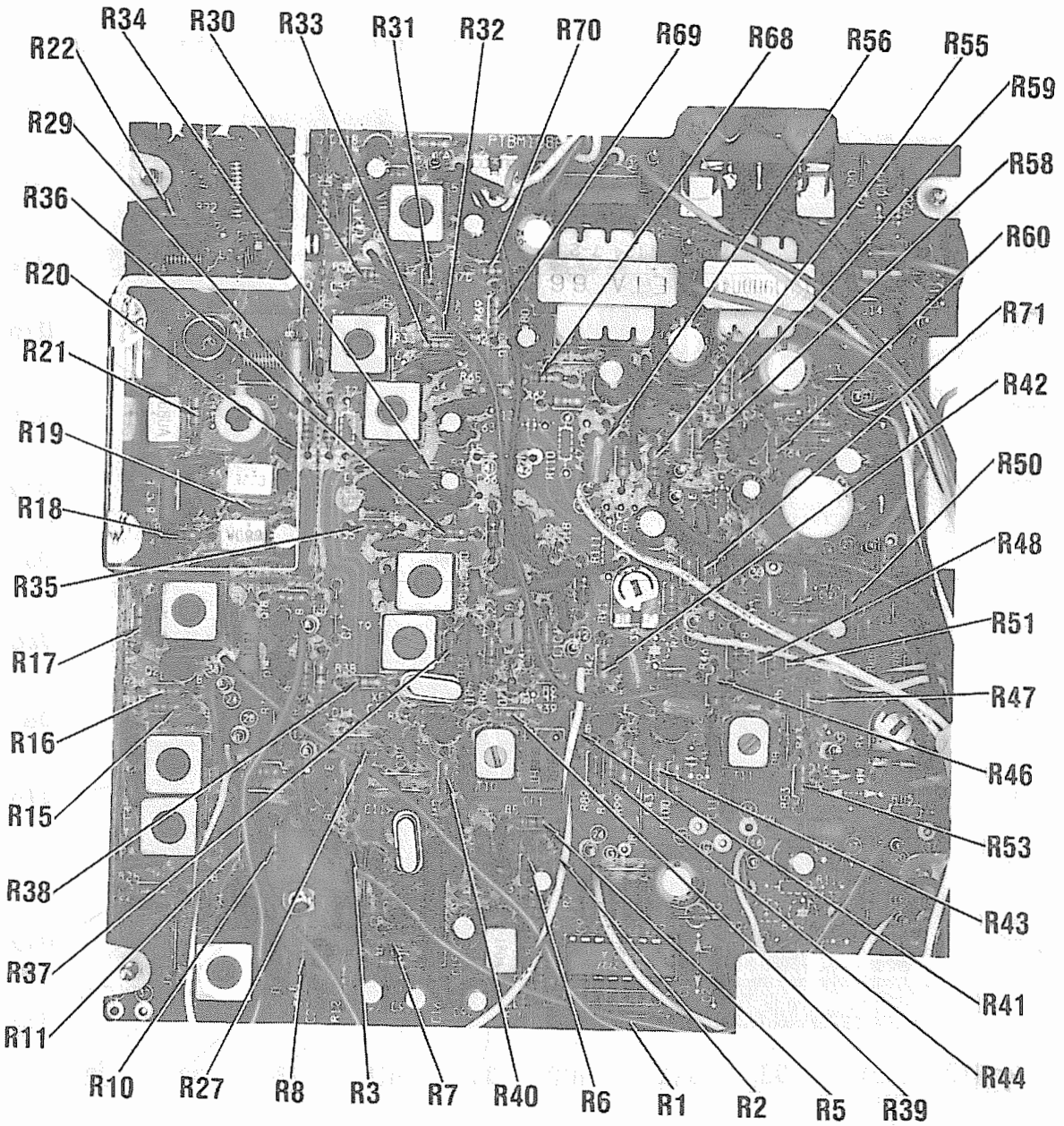
R34
R30
R33
R31
R32
R70
R69
R68
R56
R55
R22
R59
R29
R58
R36
R60
R20
R71
R21
R42
R19
R50
R18
R48
R35
R51
R17
R47
R16
R46
R15
R53
R38
R43
R37
R41
R11
R44
R10
R27
R8
R3
R7
R40
R6
R1
R2
R5
R39

MAIN BOARD

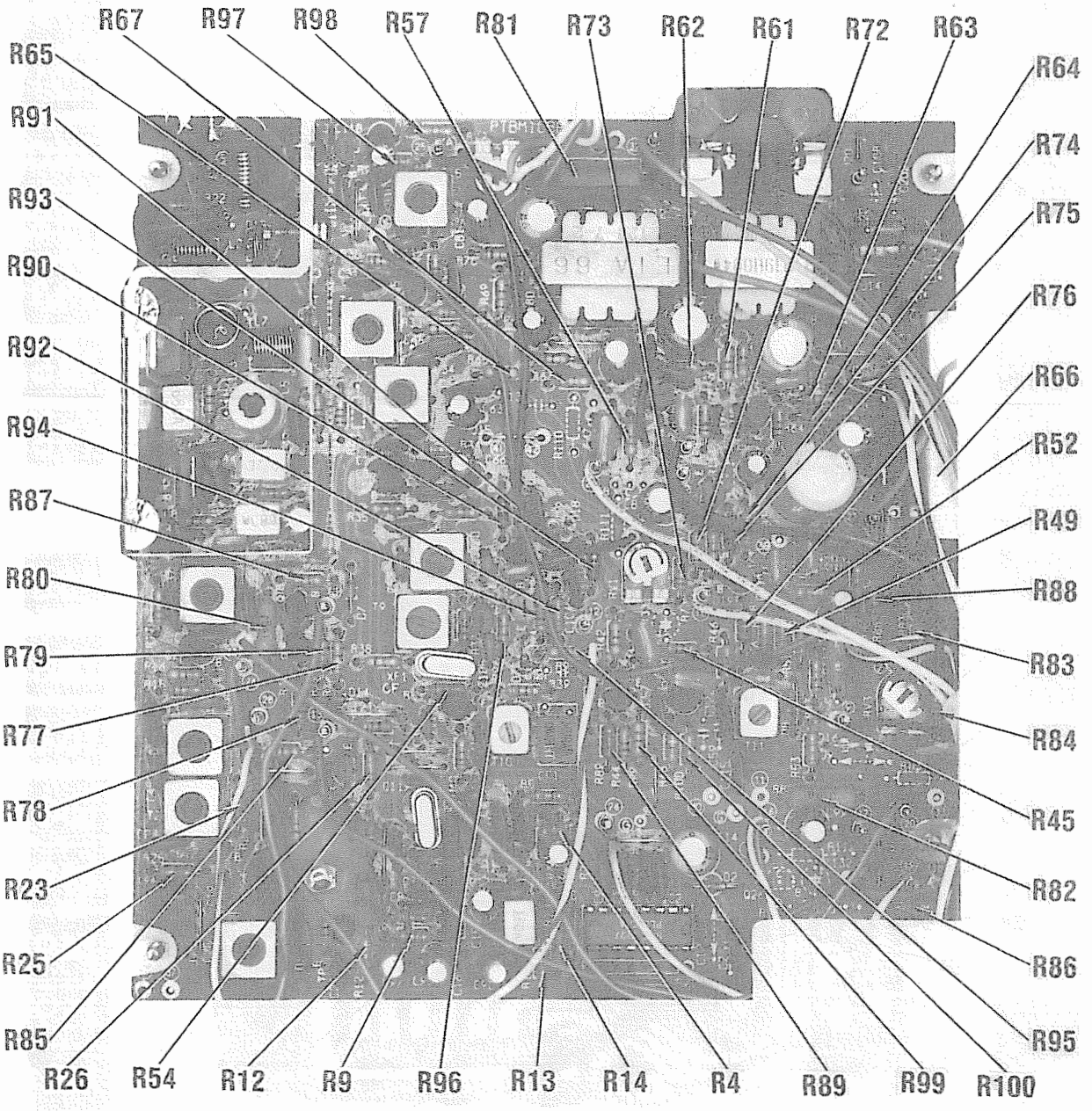

MIDLAND MODEL 5001 (77-005)

MAIN BOARD

A Howard W. Sams CIRCUITRACE® Photo

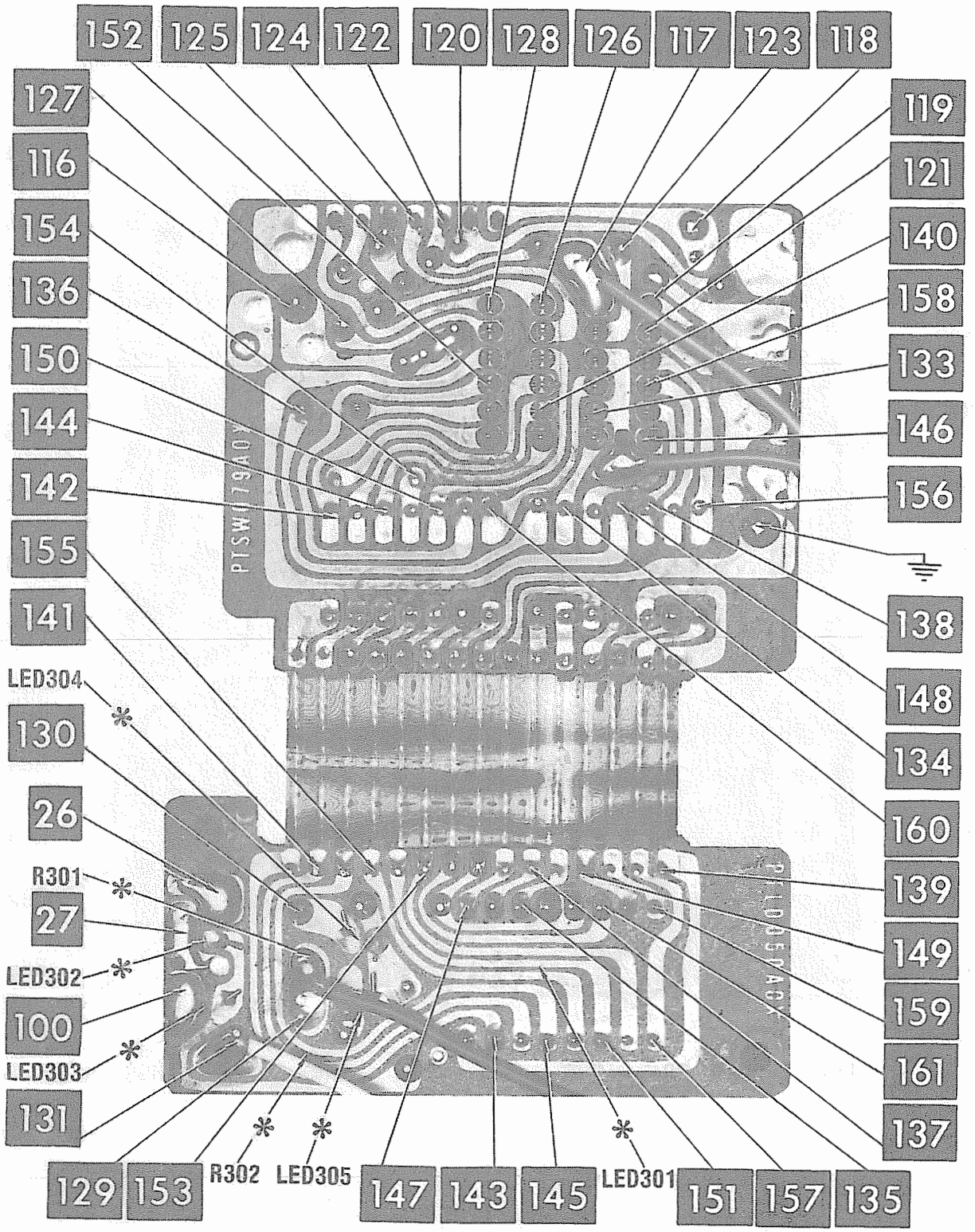

* LOCATED ON OTHER SIDE OF BOARD

CHANNEL SELECTOR BOARD

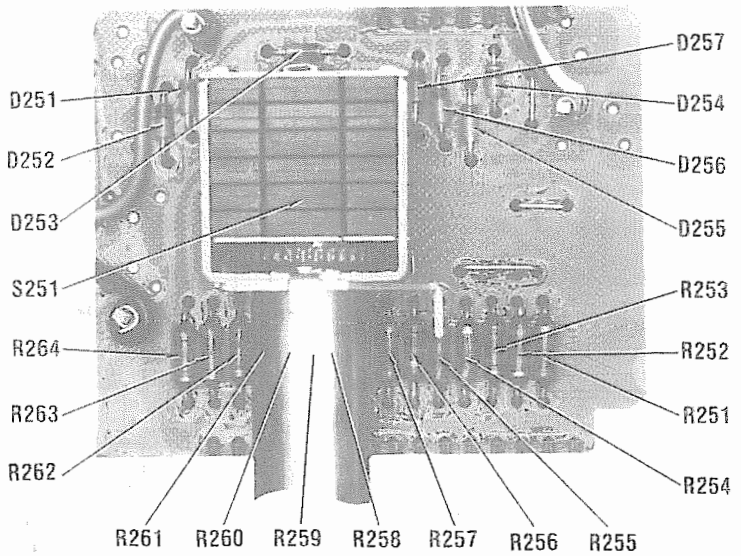

CHANNEL SELECTOR BOARD

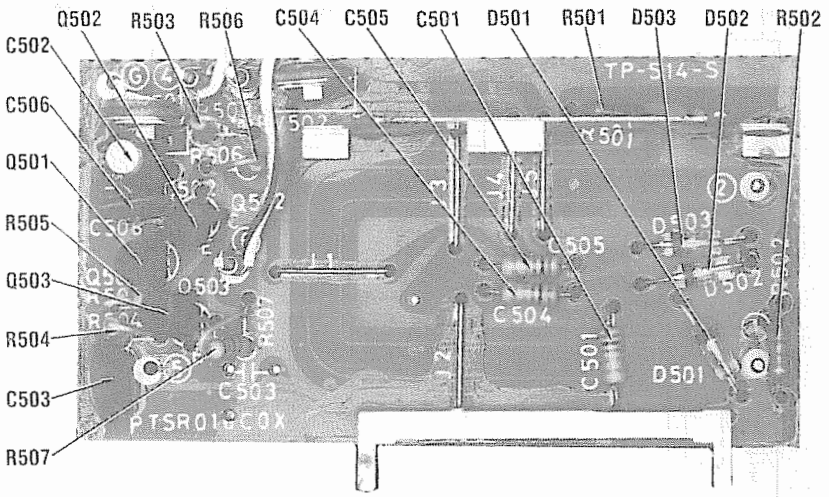

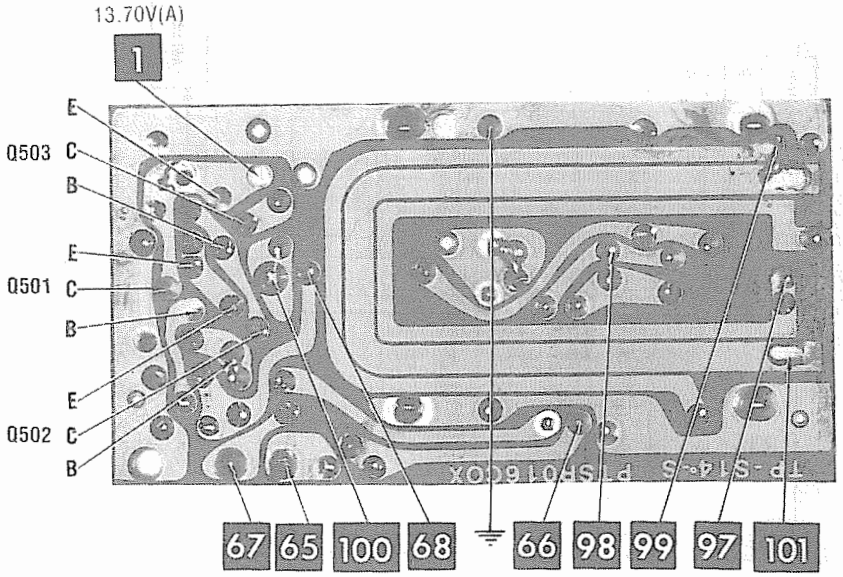

A Howard W. Sams CIRCUITRACE® Photo AWI-SWR BOARD

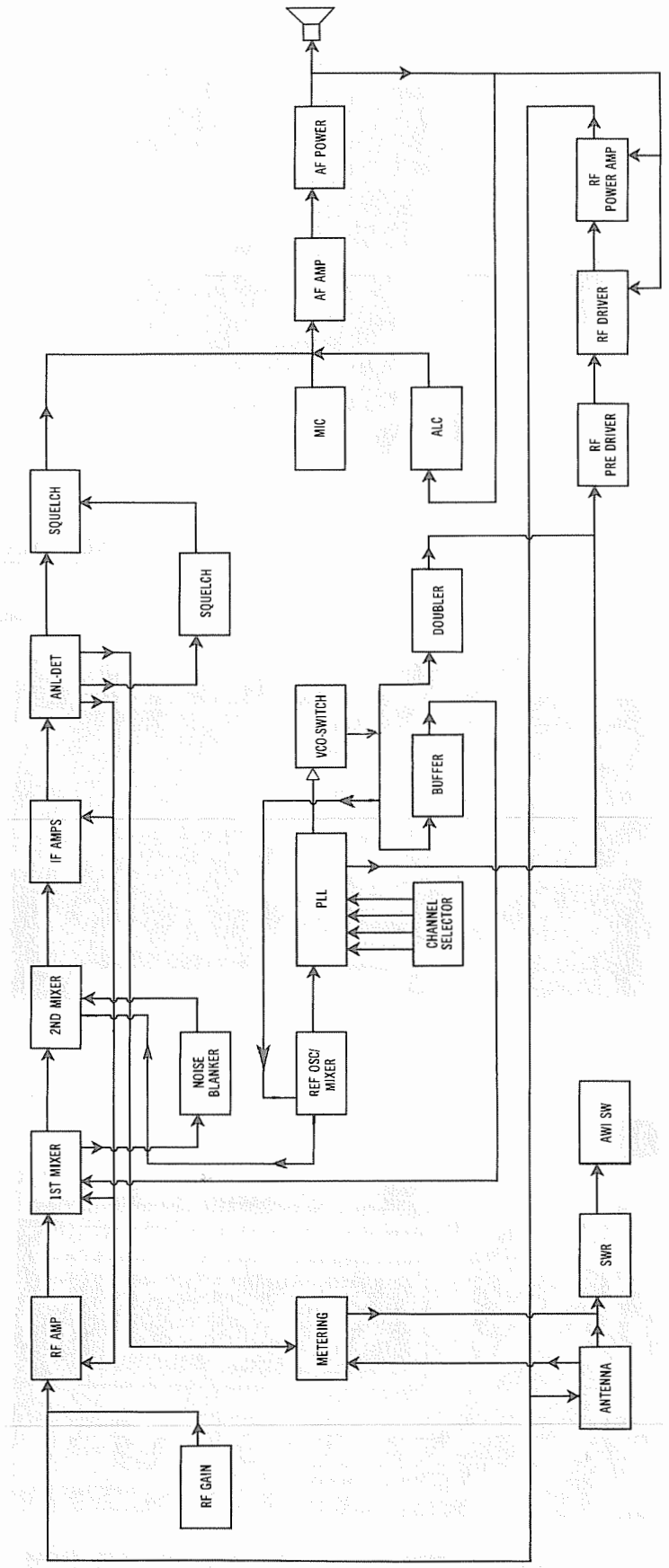

BLOCK DIAGRAM

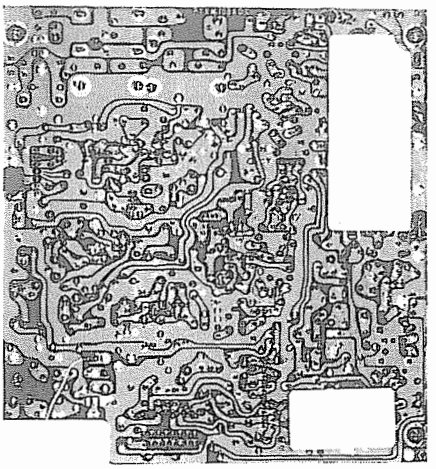

SHIELD LOCATION

PARTS LIST AND DESCRIPTION

(When ordering parts, state Model, Part Number, and Description.)

WIRING DATA

Cable (Speaker)(Unshielded).....	Use BELDEN No. 8782 (AWG24)(4 colors)
Shielding Strap.....	Use BELDEN No. 8660 (3/16" width)
Hook-up Wire (General Use).....	Use BELDEN No. 8524 (AWG22)(13 colors)
Hook-up Wire (Shielded).....	Use BELDEN No. 8401 (Braided Shield)(1 conductor)(AWG25)
	Use BELDEN No. 8421 (Spiral Shield)(1 conductor)(AWG25)
	Use BELDEN No. 8737 (Spiral Shield)(2 conductor)(AWG22)
Microphone Cable (Coiled)	Use BELDEN No. 8497 (3 conductor-1 shielded)(6 ft.)(AWG22)
Microphone Cable (Coiled)	Use BELDEN No. 9466 (3 conductor-1 shielded)(6 ft.)(AWG28)
Microphone Cable (Coiled)	Use BELDEN No. 9468 (3 conductor-1 shielded)(6 ft.)(AWG31)

SEMICONDUCTORS (Select replacement transistor for best results)

ITEM No.	TYPE No.	MFGR. PART No.	REPLACEMENT DATA							
			GENERAL ELECTRIC PART No.	MALLORY PART No.	RAYTHEON PART No.	RCA PART No.	SYLVANIA PART No.	THORDARSON PART No.	WORKMAN PART No.	ZENITH PART No.
01	1S1555	05-181555	GE-300	PTC214	REN 177	SK3175/177	ECG177	TM177	WEP1062/177	103-131
	1S2076	05-182076	GE-514	PTC214	REN 177	SK3100/519	ECG519	TM519	WEP925/519	103-131
	1N4448	05-174448	GE-514	PTC214	REN 177	SK3100/519	ECG519	TM519	WEP925/519	103-131
02	MZ306	05-480306		ZM68		SK3778/5012A	ECG5012A	TM5012	WEP1413/5012	
03	ITT410	05-200410			REN 612	SK3325/612	ECG612	TM612		103-176
	BB122				REN 612	SK3325/612	ECG612	TM612		103-176
	MV201				REN 612	SK3325/612	ECG612	TM612		103-176
D5	1S1555	05-181555	GE-300	PTC214	REN 177	SK3175/177	ECG177	TM177	WEP1062/177	103-131
	1S2076	05-182076	GE-514	PTC214	REN 177	SK3100/519	ECG519	TM519	WEP925/519	103-131
	1N4448	05-174448	GE-514	PTC214	REN 177	SK3100/519	ECG519	TM519	WEP925/519	103-131
D6	1S1555	05-181555	GE-300	PTC214	REN 177	SK3175/177	ECG177	TM177	WEP1062/177	103-131
	1S2076	05-182076	GE-514	PTC214	REN 177	SK3100/519	ECG519	TM519	WEP925/519	103-131
	1N4448	05-174448	GE-514	PTC214	REN 177	SK3100/519	ECG519	TM519	WEP925/519	103-131
07	1S1555	05-181555	GE-300	PTC214	REN 177	SK3175/177	ECG177	TM177	WEP1062/177	103-131
	1N4448	05-174448	GE-514	PTC214	REN 177	SK3100/519	ECG519	TM519	WEP925/519	103-131
08	1N60	05-170060	1N60	PTC206	REN 109	SK3088	ECG109	TM109/**	WEP134/109	103-Z9001
	1K261	05-190261	1N34AS	PTC207	REN 109	SK3087	ECG109	TM109/**	WEP134/109	103-Z9001
	1K60	05-190060	1N60	PTC206	REN 109	SK3088	ECG109	TM109/**	WEP134/109	103-Z9001
09	1S1555	05-181555	GE-300	PTC214	REN 177	SK3175/177	ECG177	TM177	WEP1062/177	103-131
	1S2076	05-182076	GE-514	PTC214	REN 177	SK3100/519	ECG519	TM519	WEP925/519	103-131
	1N4448	05-174448	GE-514	PTC214	REN 177	SK3100/519	ECG519	TM519	WEP925/519	103-131
D10	1N60	05-170060	1N60	PTC206	REN 109	SK3088	ECG109	TM109/**	WEP134/109	103-Z9001
	1K261	05-190261	1N34AS	PTC207	REN 109	SK3087	ECG109	TM109/**	WEP134/109	103-Z9001
	1K60	05-190060	1N60	PTC206	REN 109	SK3088	ECG109	TM109/**	WEP134/109	103-Z9001
D11	SR1K-4	05-750004	GE-504A	PTC201	REN 116	SK3311	ECG116	TM116	WEP156	212-76-02
012	1S1885	05-181885	GE-504A	PTC201	REN 116	SK3311	ECG116	TM116	WEP156	212-76-02
	SR1K-4	05-750004	GE-504A	PTC201	REN 116	SK3311	ECG116	TM116	WEP156	212-76-02
013	R09.1E	05-540091	GEZD-9.1	Z89.1B	REN 139	SK3060/139A	ECG139A	TM139A/**	WEP1109/139A	103-272
	UZ9.1B	05-860910	GEZD-9.1	Z89.1B	REN 139	SK3060/139A	ECG139A	TM139A/**	WEP1109/139A	103-272
D14	1S1555	05-181555	GE-300	PTC214	REN 177	SK3175/177	ECG177	TM177	WEP1062/177	103-131
	1S2076	05-182076	GE-514	PTC214	REN 177	SK3100/519	ECG519	TM519	WEP925/519	103-131
	1N4448	05-174448	GE-514	PTC214	REN 177	SK3100/519	ECG519	TM519	WEP925/519	103-131
D15	1N60	05-170060	1N60	PTC206	REN 109	SK3088	ECG109	TM109/**	WEP134/109	103-Z9001
	1K261	05-190261	1N34AS	PTC207	REN 109	SK3087	ECG109	TM109/**	WEP134/109	103-Z9001
	1K60	05-190060	1N60	PTC206	REN 109	SK3088	ECG109	TM109/**	WEP134/109	103-Z9001

PARTS LIST AND DESCRIPTION (CONTINUED)

(When ordering parts, state Model, Part Number, and Description.)

SEMICONDUCTORS (Select replacement transistor for best results) (cont)

ITEM No.	TYPE No.	MFGR. PART No.	REPLACEMENT DATA							
			GENERAL ELECTRIC PART No.	MALLORY PART No.	RAYTHEON PART No.	RCA PART No.	SYLVANIA PART No.	THORDARSON PART No.	WORKMAN PART No.	ZENITH PART No.
D16	1N60	05-170060	1N60	PTC206	REN 109	SK3088	ECG109	TM109/**	WEP134/109	103-Z9001
	1K261	05-190261	1N34AS	PTC207	REN 109	SK3087	ECG109	TM109/**	WEP134/109	103-Z9001
	1K60	05-190060	1N60	PTC206	REN 109	SK3088	ECG109	TM109/**	WEP134/109	103-Z9001
D17	1S1555	05-181555	GE-300	PTC214	REN 177	SK3175/177	ECG177	TM177	WEP1062/177	103-131
	1S2076	05-182076	GE-514	PTC214	REN 177	SK3100/519	ECG519	TM519	WEP925/519	103-131
	1N4448	05-174448	GE-514	PTC214	REN 177	SK3100/519	ECG519	TM519	WEP925/519	103-131
D18	1N60	05-170060	1N60	PTC206	REN 109	SK3088	ECG109	TM109/**	WEP134/109	103-Z9001
	1K261	05-190261	1N34AS	PTC207	REN 109	SK3087	ECG109	TM109/**	WEP134/109	103-Z9001
D19	1N60	05-170060	1N60	PTC206	REN 109	SK3088	ECG109	TM109/**	WEP134/109	103-Z9001
	1K261	05-190261	1N34AS	PTC207	REN 109	SK3087	ECG109	TM109/**	WEP134/109	103-Z9001
D20	1S1555	05-181555	GE-300	PTC214	REN 177	SK3175/177	ECG177	TM177	WEP1062/177	103-131
	1S2076	05-182076	GE-514	PTC214	REN 177	SK3100/519	ECG519	TM519	WEP925/519	103-131
	1N4448	05-174448	GE-514	PTC214	REN 177	SK3100/519	ECG519	TM519	WEP925/519	103-131
D251	1S1555	05-181555	GE-300	PTC214	REN 177	SK3175/177	ECG177	TM177	WEP1062/177	103-131
	1S2076	05-182076	GE-514	PTC214	REN 177	SK3100/519	ECG519	TM519	WEP925/519	103-131
	1N4448	05-174448	GE-514	PTC214	REN 177	SK3100/519	ECG519	TM519	WEP925/519	103-131
D252	1S1555	05-181555	GE-300	PTC214	REN 177	SK3175/177	ECG177	TM177	WEP1062/177	103-131
	1S2076	05-182076	GE-514	PTC214	REN 177	SK3100/519	ECG519	TM519	WEP925/519	103-131
	1N4448	05-174448	GE-514	PTC214	REN 177	SK3100/519	ECG519	TM519	WEP925/519	103-131
D253	1S1555	05-181555	GE-300	PTC214	REN 177	SK3175/177	ECG177	TM177	WEP1062/177	103-131
	1S2076	05-182076	GE-514	PTC214	REN 177	SK3100/519	ECG519	TM519	WEP925/519	103-131
	1N4448	05-174448	GE-514	PTC214	REN 177	SK3100/519	ECG519	TM519	WEP925/519	103-131
D254	1S1555	05-181555	GE-300	PTC214	REN 177	SK3175/177	ECG177	TM177	WEP1062/177	103-131
	1S2076	05-182076	GE-514	PTC214	REN 177	SK3100/519	ECG519	TM519	WEP925/519	103-131
	1N4448	05-174448	GE-514	PTC214	REN 177	SK3100/519	ECG519	TM519	WEP925/519	103-131
D255	1S1555	05-181555	GE-300	PTC214	REN 177	SK3175/177	ECG177	TM177	WEP1062/177	103-131
	1S2076	05-182076	GE-514	PTC214	REN 177	SK3100/519	ECG519	TM519	WEP925/519	103-131
	1N4448	05-174448	GE-514	PTC214	REN 177	SK3100/519	ECG519	TM519	WEP925/519	103-131
D256	1S1555	05-181555	GE-300	PTC214	REN 177	SK3175/177	ECG177	TM177	WEP1062/177	103-131
	1S2076	05-182076	GE-514	PTC214	REN 177	SK3100/519	ECG519	TM519	WEP925/519	103-131
	1N4448	05-174448	GE-514	PTC214	REN 177	SK3100/519	ECG519	TM519	WEP925/519	103-131
D257	1S1555	05-181555	GE-300	PTC214	REN 177	SK3175/177	ECG177	TM177	WEP1062/177	103-131
	1S2076	05-182076	GE-514	PTC214	REN 177	SK3100/519	ECG519	TM519	WEP925/519	103-131
	1N4448	05-174448	GE-514	PTC214	REN 177	SK3100/519	ECG519	TM519	WEP925/519	103-131
D501	1N60	05-170060	1N60	PTC206	REN 109	SK3088	ECG109	TM109/**	WEP134/109	103-Z9001
	1K261	05-190261	1N34AS	PTC207	REN 109	SK3087	ECG109	TM109/**	WEP134/109	103-Z9001
	1K60	05-190060	1N60	PTC206	REN 109	SK3088	ECG109	TM109/**	WEP134/109	103-Z9001
D502	1N60	05-170060	1N60	PTC206	REN 109	SK3088	ECG109	TM109/**	WEP134/109	103-Z9001
	1K261	05-190261	1N34AS	PTC207	REN 109	SK3087	ECG109	TM109/**	WEP134/109	103-Z9001
	1K60	05-190060	1N60	PTC206	REN 109	SK3088	ECG109	TM109/**	WEP134/109	103-Z9001
D503	1N60	05-170060	1N60	PTC206	REN 109	SK3088	ECG109	TM109/**	WEP134/109	103-Z9001
	1K261	05-190261	1N34AS	PTC207	REN 109	SK3087	ECG109	TM109/**	WEP134/109	103-Z9001
	1K60	05-190060	1N60	PTC206	REN 109	SK3088	ECG109	TM109/**	WEP134/109	103-Z9001
IC1	PLL03A						ECG1272	TM1272		
	PLL03	02-360003					ECG1272	TM1272		
IC2	C3001A				REN 1192	SK3445/1192	ECG1192	TM1192	WEP2120/1192	221-Z9061
	C3001	02-373001			REN 1192	SK3445/1192	ECG1192	TM1192	WEP2120/1192	221-Z9061
	TA7310P	02-257310			REN 1192	SK3445/1192	ECG1192	TM1192	WEP2120/1192	221-Z9061
IC3	UPC1181H					SK3922				
	UPC1181	02-301181				SK3922				
Q1	2SC710	01-030710	GE-211*	PTC132*	REN 123AP*	SK3356	ECG107*	TM107*/**	WEP710	121-Z9000A*
	2SC829	01-030829	GE-20*	PTC139*	REN 229*	SK3122	ECG289	TM289/**	WEP829	121-Z9021*
	2SC839		GE-61*	PTC132*	REN 123A*	SK3124/289	ECG293	TM293/**	WEP1945	121-Z9000A*
Q2	2SC710	01-030710	GE-211*	PTC132*	REN 123AP*	SK3356	ECG107*	TM107*/**	WEP710	121-Z9000A*
	2SC1687		GE-20*	PTC121*	REN 123A*	SK3246/229	ECG229*	TM229*	WEP710*	121-Z9000A*
Q3	2SC1760	01-031760	GE-276	PTC180	REN 306	SK3251/306	ECG306	TM306	WEP771/306	121-Z9069
	2SC1846		GE-336	PTC904	REN 295	SK3253/295	ECG295	TM295	WEP913/295	121-880
	2SC2036		GE-336		REN 306	SK3251/306	ECG373	TM373	WEP771/306	121-Z9069
Q4	2SC1306	01-031306	GE-215	PTC186	REN 235	SK3239/236	ECG235	TM235/**	WEP785/235	121-Z9039
	2SC1678		GE-322	PTC186	REN 235	SK3197/235	ECG235	TM235	WEP785/235	121-Z9039
	2SC1974		GE-337	PTC186	REN 235	SK3239/236	ECG235	TM235	WEP785/235	121-Z9039
	2SC2075		GE-215	PTC186	REN 235	SK3197/235	ECG235	TM235	WEP785/235	121-Z9039
Q5	2SC1047C		GE-60*	PTC132*	REN 229*	SK3132	ECG229*	TM229*	WEP63/161*	121-Z9021*
	2SC1047	01-031047	GE-60*	PTC132*	REN 229*	SK3132	ECG229*	TM229*	WEP63/161*	121-Z9021*
	2SC460		GE-61*	PTC136*	REN 107	SK3122	ECG199	TM199/**	WEP460	121-522*
Q6	2SC710	01-030710	GE-211*	PTC132*	REN 123AP*	SK3356	ECG107*	TM107*/**	WEP710	121-Z9000A*
	2SC839		GE-61*	PTC132*	REN 123A*	SK3124/289	ECG293	TM293/**	WEP1945	121-Z9000A*
Q7	2SC710	01-030710	GE-211*	PTC132*	REN 123AP*	SK3356	ECG107*	TM107*/**	WEP710	121-Z9000A*
	2SC839		GE-61*	PTC132*	REN 123A*	SK3124/289	ECG293	TM293/**	WEP1945	121-Z9000A*
Q8	2SC829C		GE-20*	PTC139*	REN 229*	SK3122	ECG289	TM289/**	WEP829	121-Z9021*
	2SC839	01-030829	GE-20*	PTC139*	REN 229*	SK3122	ECG289	TM289/**	WEP829	121-Z9021*
	2SC710	01-030710	GE-61*	PTC132*	REN 123A*	SK3124/289	ECG293	TM293/**	WEP1945	121-Z9000A*
Q9	2SC829C		GE-20*	PTC139*	REN 229*	SK3122	ECG289	TM289/**	WEP829	121-Z9021*
	2SC829	01-030829	GE-20*	PTC139*	REN 229*	SK3122	ECG289	TM289/**	WEP829	121-Z9021*
Q10	2SC829B		GE-20*	PTC139*	REN 229*	SK3122	ECG289	TM289/**	WEP829	121-Z9021*
	2SC829	01-030829	GE-20*	PTC139*	REN 229*	SK3122	ECG289	TM289/**	WEP829	121-Z9021*
	2SC710	01-030710	GE-211*	PTC132*	REN 123AP*	SK3356	ECG107*	TM107*/**	WEP710	121-Z9000A*
Q11	2SC710	01-030710	GE-211*	PTC132*	REN 123AP*	SK3356	ECG107*	TM107*/**	WEP710	121-Z9000A*
	2SC829	01-030829	GE-20*	PTC139*	REN 229*	SK3122	ECG289	TM289/**	WEP829	121-Z9021*
	2SC839		GE-61*	PTC132*	REN 123A*	SK3124/289	ECG293	TM293/**	WEP1945	121-Z9000A*
Q12	2SC710	01-030710	GE-211*	PTC132*	REN 123AP*	SK3356	ECG107*	TM107*/**	WEP710	121-Z9000A*
	2SC829	01-030829	GE-20*	PTC139*	REN 229*	SK3122	ECG289	TM289/**	WEP829	121-Z9021*
	2SC839		GE-61*	PTC132*	REN 123A*	SK3124/289	ECG293	TM293/**	WEP1945	121-Z9000A*
Q13	2SC710	01-030710	GE-211*	PTC132*	REN 123AP*	SK3356	ECG107*	TM107*/**	WEP710	121-Z9000A*
	2SC829	01-030829	GE-20*	PTC139*	REN 229*	SK3122	ECG289	TM289/**	WEP829	121-Z9021*
	2SC839		GE-61*	PTC132*	REN 123A*	SK3124/289	ECG293	TM293/**	WEP1945	121-Z9000A*

PARTS LIST AND DESCRIPTION (CONTINUED)

(When ordering parts, state Model, Part Number, and Description.)

SEMICONDUCTORS (Select replacement transistor for best results) (cont)

ITEM No.	TYPE No.	MFGR. PART No.	REPLACEMENT DATA							
			GENERAL ELECTRIC PART No.	MALLORY PART No.	RAYTHEON PART No.	RCA PART No.	SYLVANIA PART No.	THORDARSON PART No.	WORKMAN PART No.	ZENITH PART No.
Q14	2SA719R		GE-269	PTC103*	REN 290	SK3114/290	ECG290	TM290/**	WEP911/290	121-Z9003*
	2SA719	01-010719	GE-269	PTC103*	REN 290	SK3114/290	ECG290	TM290/**	WEP911/290	121-Z9003*
	2SA720		GE-272	PTC103	REN 298	SK3114/290	ECG298	TM298	WEP915/298	121-879*
	2SA564		GE-65	PTC103*	REN 234	SK3247/234	ECG234	TM234	WEP495	121-879*
	2SA952		GE-244*	PTC142*	REN 129*	SK3114/290	ECG129*	TM129*	WEP60/129*	121-Z9005
Q15	2SA733Q		GE-48	PTC127	REN 294	SK3114/290	ECG290	TM290/**	WEP911/290	121-Z9067
	2SA733	01-010733	GE-48	PTC127	REN 294	SK3114/290	ECG290	TM290/**	WEP911/290	121-Z9067
	2SA564		GE-65	PTC103*	REN 234	SK3247/234	ECG234	TM234	WEP495	121-879*
	2SA719		GE-269	PTC103*	REN 290	SK3114/290	ECG290	TM290/**	WEP911/290	121-Z9003*
	2SA952		GE-244*	PTC142*	REN 129*	SK3114/290	ECG129*	TM129*	WEP60/129*	121-Z9005
Q16	2SC945AQ		GE-212	PTC121*	REN 199	SK3124/289	ECG199	TM199/**	WEP1945	121-972*
	2SC945A	01-030945	GE-212	PTC121*	REN 199	SK3124/289	ECG199	TM199/**	WEP1945	121-972*
	2SC945		GE-212	PTC121*	REN 199	SK3124/289	ECG199	TM199/**	WEP1945	121-972*
	2SC828		GE-61*	PTC139*	REN 199	SK3122	ECG199	TM199/**	WEP828	121-972*
	2SC372		GE-61*	PTC121*	REN 123A*	SK3245/199	ECG123AP*	TM123AP*/**	WEP372	121-Z9000A*
Q17	2SC1327T		GE-85*	PTC139*	REN 199	SK3899	ECG199	TM199	WEP634	121-972*
	2SC1327	01-031327	GE-85*	PTC139*	REN 199	SK3899	ECG199	TM199	WEP634	121-972*
	2SC900		GE-62	PTC139*	REN 199	SK3250/315	ECG199	TM199/**	WEP66/199	121-972*
	2SC945		GE-212	PTC121*	REN 199	SK3124/289	ECG199	TM199/**	WEP1945	121-972*
Q18	2SC1318R		GE-210	PTC123	REN 297	SK3124/289	ECG297	TM297	WEP914/297	921-340
	2SC1318	01-031318	GE-210	PTC123	REN 297	SK3124/289	ECG297	TM297	WEP914/297	921-340
	2SC2002		GE-271	PTC123*	REN 297	SK3449/297	ECG297	TM297	WEP914/297	921-340
Q19	2SC945AQ		GE-212	PTC121*	REN 199	SK3124/289	ECG199	TM199/**	WEP1945	121-972*
	2SC945A	01-030945	GE-212	PTC121*	REN 199	SK3124/289	ECG199	TM199/**	WEP1945	121-972*
	2SC945		GE-212	PTC121*	REN 199	SK3124/289	ECG199	TM199/**	WEP1945	121-972*
	2SC828		GE-61*	PTC139*	REN 199	SK3122	ECG199	TM199/**	WEP828	121-972*
	2SC372		GE-61*	PTC121*	REN 123A*	SK3245/199	ECG123AP*	TM123AP*/**	WEP372	121-Z9000A*
Q20	2SC900U		GE-62	PTC139*	REN 199	SK3250/315	ECG199	TM199/**	WEP66/199	121-972*
	2SC900	01-030900	GE-62	PTC139*	REN 199	SK3250/315	ECG199	TM199/**	WEP66/199	121-972*
	2SC1327		GE-85*	PTC139*	REN 199	SK3245/199	ECG199	TM199	WEP634	121-972*
Q21	2SC829C		GE-20*	PTC139*	REN 229*	SK3122	ECG289	TM289/**	WEP829	121-Z9021*
	2SC829	01-030829	GE-20*	PTC139*	REN 229*	SK3122	ECG289	TM289/**	WEP829	121-Z9021*
	2SC839		GE-61*	PTC132*	REN 123A*	SK3124/289	ECG293	TM293/**	WEP1945	121-Z9000A*
	2SC710		GE-211*	PTC132*	REN 123AP*	SK3356	ECG107*	TM107*/**	WEP710	121-Z9000A*
Q22	2SA733Q		GE-48	PTC127	REN 294	SK3114/290	ECG290	TM290/**	WEP911/290	121-Z9067
	2SA733	01-010733	GE-48	PTC127	REN 294	SK3114/290	ECG290	TM290/**	WEP911/290	121-Z9067
Q23	2SC710	01-030710	GE-211*	PTC132*	REN 123AP*	SK3356	ECG107*	TM107*/**	WEP710	121-Z9000A*
	2SC829	01-030829	GE-20*	PTC139*	REN 229*	SK3122	ECG289	TM289/**	WEP829	121-Z9021*
	2SC839		GE-61*	PTC132*	REN 123A*	SK3124/289	ECG293	TM293/**	WEP1945	121-Z9000A*
Q501	2SC945AP		GE-212	PTC121*	REN 199	SK3124/289	ECG199	TM199/**	WEP1945	121-972*
	2SC945		GE-212	PTC121*	REN 199	SK3124/289	ECG199	TM199/**	WEP1945	121-972*
	2SC828		GE-61*	PTC139*	REN 199	SK3122	ECG199	TM199/**	WEP828	121-972*
Q502	2SC945AP		GE-212	PTC121*	REN 199	SK3124/289	ECG199	TM199/**	WEP1945	121-972*
	2SC945		GE-212	PTC121*	REN 199	SK3124/289	ECG199	TM199/**	WEP1945	121-972*
	2SC828		GE-61*	PTC139*	REN 199	SK3122	ECG199	TM199/**	WEP828	121-972*
Q503	2SA719R		GE-269	PTC103*	REN 290	SK3114/290	ECG290	TM290/**	WEP911/290	121-Z9003*
	2SA719		GE-269	PTC103*	REN 290	SK3114/290	ECG290	TM290/**	WEP911/290	121-Z9003*
	2SA733	01-010733	GE-48	PTC127	REN 294	SK3114/290	ECG290	TM290/**	WEP911/290	121-Z9067
	2SA564		GE-65	PTC103*	REN 234	SK3247/234	ECG234	TM234	WEP495	121-879*
	2SA952		GE-244*	PTC142*	REN 129*	SK3114/290	ECG129*	TM129*	WEP60/129*	121-Z9005

* Lead configuration may vary from original.
/** Also available as exact type replacement.

ELECTROLYTIC CAPACITORS

ITEM No.	RATING	REPLACEMENT DATA				
		MFGR. PART No.	CORNELL-DUBILIER PART No.	MALLORY PART No.	SPRAGUE PART No.	
					Q-LINE	GENERAL LINE
C14	47 25V		PC50-25	VTT47E25	QV1-77	EV-1426.1
	100 10V	00-132165	PC100-10	VTT100D10	QV1-93	EV-1131
C15	1 50V	00-132055	PC1-50	VTT1A50	QV1-11	EV-1615
C62	1 50V	00-132055	PC1-50	VTT1A50	QV1-11	EV-1615
C63	3.3 25V	00-132465	NLW4-50	VTT3R3A50	QV1-25	EV-1618.1
C66	10 16V	00-132115	PC10-25	VTT10B25	QV1-41	EV-1222
C72	100 16V	00-132175	PC100-16	VTT100E16	QV1-95	EV-1231
C76	4.7 25V	03-003072		TOC686M025FL	QDT1-55	SD25-6R89
C77	47 16V	00-132630	PC50-16	VTT47D16	QV1-73	EV-1226
C78	220 16V	00-132380	PC250-25	VTT220H16	QV1-117	EV-1240
C80	3.3 25V	00-132465	NLW4-50	VTT3R3A50	QV1-25	EV-1618.1
C81	3.3 25V	00-132465	NLW4-50	VTT3R3A50	QV1-25	EV-1618.1
C82	47 25V	00-132630	PC50-25	VTT47E25	QV1-77	EV-1426.1
C83	1000 16V	00-132210	PC1000-16	VTT1000M16	QV1-183	EV-1261
C85	33 6.3V	00-132500	PC30-25	VTT33B10		EV-1225
C86	33 6.3V	00-132500	PC30-25	VTT33B10		EV-1225
C87	4.7 25V	00-132600	PC5-50	VTT4R7B50	QV1-31	EV-1619.1
C90	100 10V	00-132165	PC100-10	VTT100D10	QV1-93	EV-1131
C96	10 16V	00-132115	PC10-25	VTT10B25	QV1-41	EV-1222
C97	1 50V	00-132055	PC1-50	VTT1A50	QV1-11	EV-1615
C98	1 50V	00-132055	PC1-50	VTT1A50	QV1-11	EV-1615
C99	33 16V	00-132510	PC30-25	VTT33D25	QV1-63	EV-1325
C118	3.3 25V	00-132465	NLW4-50	VTT3R3A50	QV1-25	EV-1618.1
C502	4.7 25V	00-132600	PC5-50	VTT4R7B50	QV1-31	EV-1619.1

PARTS LIST AND DESCRIPTION (CONTINUED)

(When ordering parts, state Model, Part Number, and Description.)

CAPACITORS

ITEM No.	RATING	MFGR. PART No.	REPLACEMENT DATA			
			CORNELL-DUBILIER PART No.	MALLORY PART No.	SPRAGUE PART No.	
					Q-LINE	GENERAL LINE
C1	.01 50V			MAG5011		
C2	.047 50V (1)		DPMS2S47	EWF1A147	QF1-171	1PB-S47
C3	330 50V (1)		GP330	GP333	QCT2-33	10TS-T33
C4	68 50V		NP068	CN0468		10TCC-068
C5	.001 50V 10%		DPMS601	M192P10292	QFT2-1	1FT-D10
C6	.01 50V			MAG5011		
C7	.001 50V 10%		DPMS601	M192P10292	QFT2-1	1FT-D10
C8	100 50V		NP0100	CN0310		10TCC-T10
C9	.01 50V			MAG5011		
C10	.001 50V 10%		DPMS601	M192P10292	QFT2-1	1FT-D10
C11	.01 50V			MAG5011		
C12	.047 50V		DPMS2S47	EWF1A147	QF1-171	1PB-S47
C13	56 50V			CN0456		10TCC-056
C16	39 50V			CN0439		10TCC-039
C17	68 50V		NP068	CN0468		10TCC-068
C18	39 50V			CN0439		10TCC-039
C19	120 50V			CN0312		10TCC-T12
C20	22 50V		NP022	CN0422		10TCC-022
C21	5 50V		NP06P8	CN0568		10TCC-V68
C22	15 50V (1)		NP015	CN0415		10TCC-015
C23	.01 50V			MAG5011		
C24	22 50V		NP022	CN0422		10TCC-Q22
C25	82 50V		NP082	CN0482		10TCC-Q82
C26	220 50V					10TCC-T22
C27	150 50V			CN0315		10TCC-T15
	100 50V		NP0100	CN0310		10TCC-T10
C28	.01 50V			MAG5011		
C29	100 50V		NP0100	CN0310		10TCC-T10
C30	15 50V		NP015	CN0415		10TCC-015
C31	.01 50V			MAG5011		
C32	47 50V (1)		NP047	CN0447	QCC2-26	10TCC-Q47
C33	.01 50V(1)			MAG5011		
C34	10 50V (1)		NP010	CN0410	QCC2-15	10TCC-010
C35	150 50V			CN0315		10TCC-T15
C36	150 50V			CN0315		10TCC-T15
C37	.01 50V			MAG5011		
C38	.01 50V			MAG5011		
C39	100 50V (1)		NP0100	CN0310		10TCC-T10
C40	.01 50V 10%		WMF1S1	M192P1039R8	QFT2-91	1FT-S10
C41	680 50V		GP680	GP368		10TS-T68
C42	.01 50V			MAG5011		
C43	150 50V (1)			CN0315		10TCC-T15
	270 500V					10TCC-T27
C44	220 50V (1)					10TCC-T22
C45	15 50V (1)		NP015	CN0415		10TCC-Q15
C46	.01 50V			MAG5011		
C47	120 50V			CN0312		10TCC-T12
C48	270 50V					10TCC-T27
C49	390 50V		GP390	GP339	QCT2-34	10TS-T39
C50	33 50V		NP033	CN0433	QCC2-22	10TCC-Q33
C51	.047 50V		DPMS2S47	EWF1A147	QF1-171	1PB-S47
C52	.01 50V			MAG5011		
C53	2 50V		NP02P2	CN0522		10TCC-V22
	.047 50V 10%		DPMS2S47	M192P4739R8	QFT2-171	1FT-S47
C54	68 50V(1)		NP068	CN0468		10TCC-068
C55	.047 50V 10%		DPMS2S47	EWF1A147	QF1-171	1PB-S47
C56	.047 50V		DPMS2S47	EWF1A147	QF1-171	1PB-S47
C57	.01 50V			MAG5011		
C58	.047 50V		DPMS2S47	EWF1A147	QF1-171	1PB-S47
C59	.047 50V		DPMS2S47	EWF1A147	QF1-171	1PB-S47
C60	.0068 50V 10%		WMF1D68	EWF1A268	QF1-73	1PB-068
C61	.01 50V 10%		WMF1S1	M192P1039R8	QFT2-91	1FT-S10
C64	.047 50V		DPMS2S47	EWF1A147	QF1-171	1PB-S47
C65	.047 50V		DPMS2S47	EWF1A147	QF1-171	1PB-S47
C67	.056 50V 10%		WMF1S56	M192P5639R8	QFT2-185	1FT-S56
C68	.0047 50V		GP4700	GP247		5GA-047
C69	.022 50V 10%(1)			M192P2239R8		192P2239R8
	.01 50V 10%			MAG5011		
C70	.001 50V			GP210	QCT2-41	10TS-010
C71	560 50V			GP356		10TS-T56
C73	.01 50V (1)			MAG5011		
C74	.01 50V			MAG5011		
C75	.0022 50V			GP222	QCT2-46	10TS-D22
C79	.068 50V 10%		WMF1S68	EWF1A168	QF1-195	1PB-S68
C84	.01 50V			MAG5011		
C88	.022 50V 10%		DPMS2S22	M192P2239R8	QFT2-127	1FT-S22
C89	.01 50V			MAG5011		
C91	47 50V		NP047	CN0447	QCC2-26	10TCC-047
C92	.01 50V			MAG5011		
C93	.0047 50V		GP4700	GP247		5GA-047
C94	.01 50V			MAG5011		
C95	.01 50V			MAG5011		
C100	27 50V			CN0427		10TCC-027
C101	220 50V					10TCC-T22
C102	220 50V					10TCC-T22
C103	.0033 50V		GP3300	GP233	QC2-107	5GA-D33
C104	.01 50V			MAG5011		
C105	82 50V		NP082	CN0482		10TCC-082
C106	.0022 50V (1)			GP222	QCT2-46	10TS-022
C107	.001 50V (1)			GP210	QCT2-41	10TS-010
C108	.0022 50V (1)			GP222	QCT2-46	10TS-022
C109	.047 50V		DPMS2S47	EWF1A147	QF1-171	1PB-S47
C110	.047 50V		DPMS2S47	EWF1A147	QF1-171	1PB-S47
C111	.047 50V		DPMS2S47	EWF1A147	QF1-171	1PB-S47
C112	.01 50V			MAG5011		
C115	.01 50V			MAG5011		
C116	.01 50V			MAG5011		
C117	.047 50V 10%		DPMS2S47	M192P4739R8	QFT2-171	1FT-S47
C119	39 50V			CN0439		10TCC-039

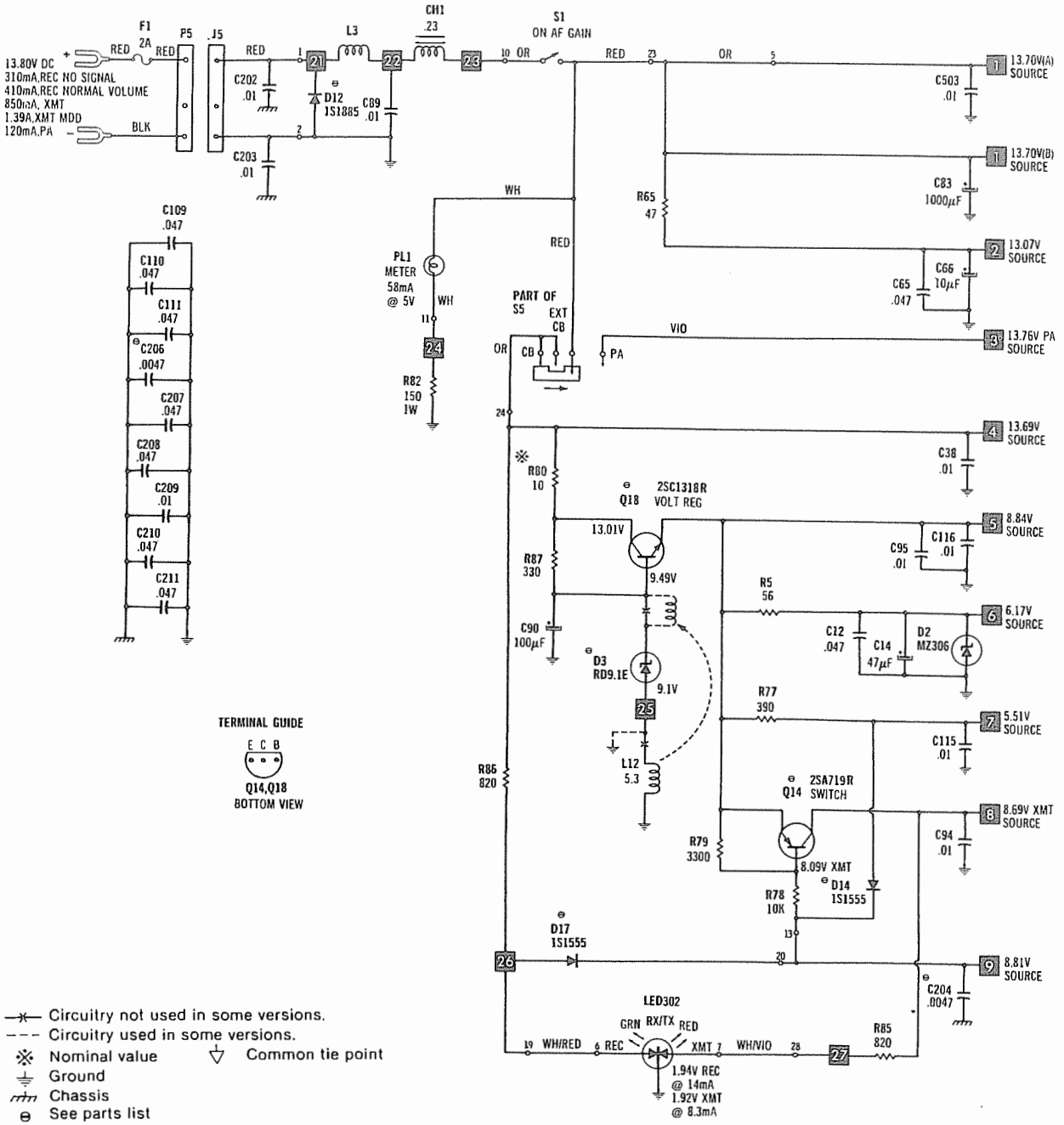

Circuitry not used in some versions.
Circuitry used in some versions.
※ Nominal value
Common tie point
Ground
Chassis
⊖ See parts list

Waveforms and Voltages taken in Channel 19 with switching in receive unless noted.
Item numbers in rectangles appear in the alignment/adjustment instructions.
Supply voltage maintained as shown at input.
Voltages measured with digital meter, no signal.
Controls adjusted for normal operation.
Terminal identification may not be found on unit.
Resistors are 1/2W or less, 5% unless noted.
Value in ( ) used in some versions.
Arrow head(s) at coils and transformers indicates accessibility of tuning slug(s).

POWER SUPPLY SCHEMATIC

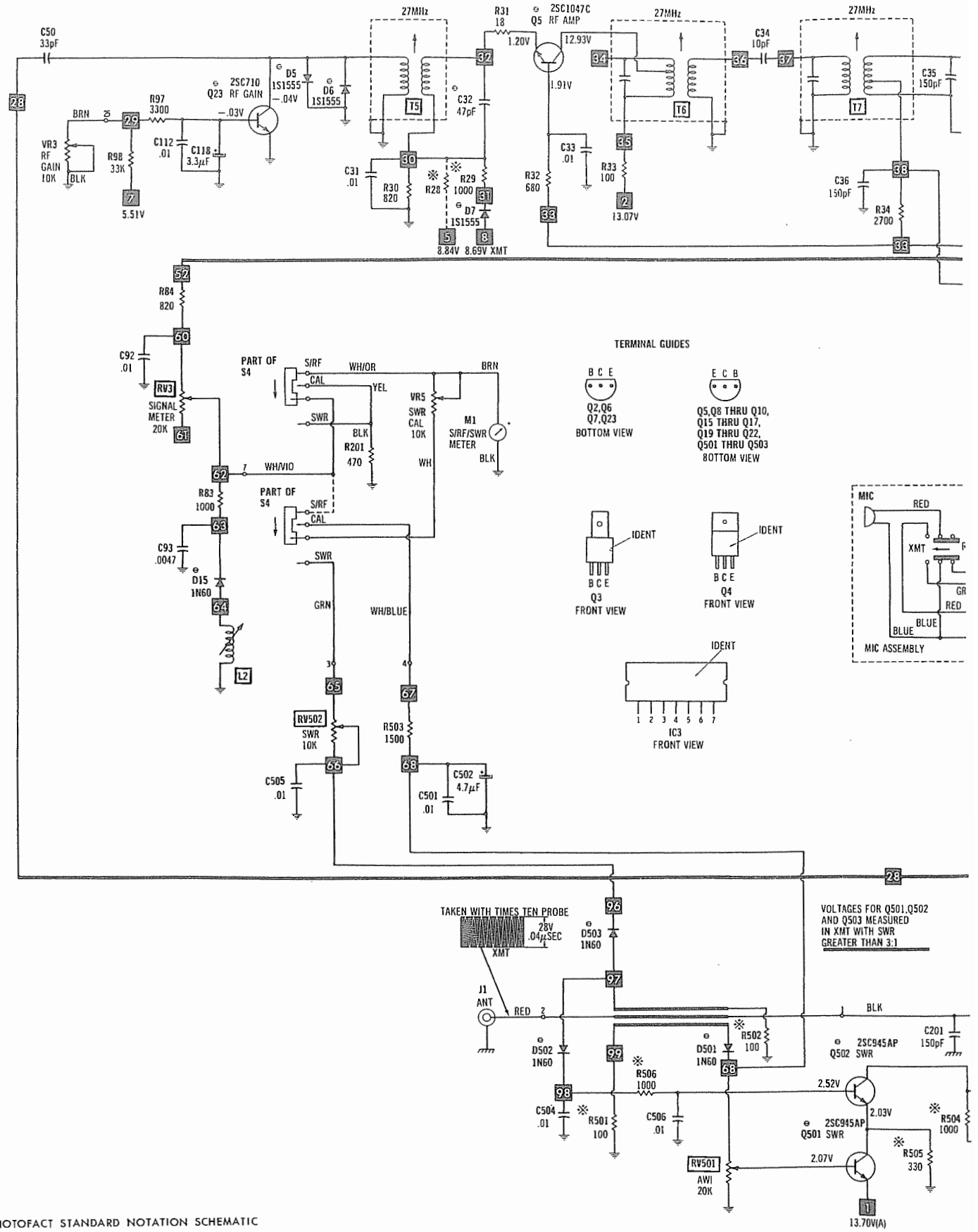

A PHOTOFACT STANDARD NOTATION SCHEMATIC WITH CIRCUITRACE

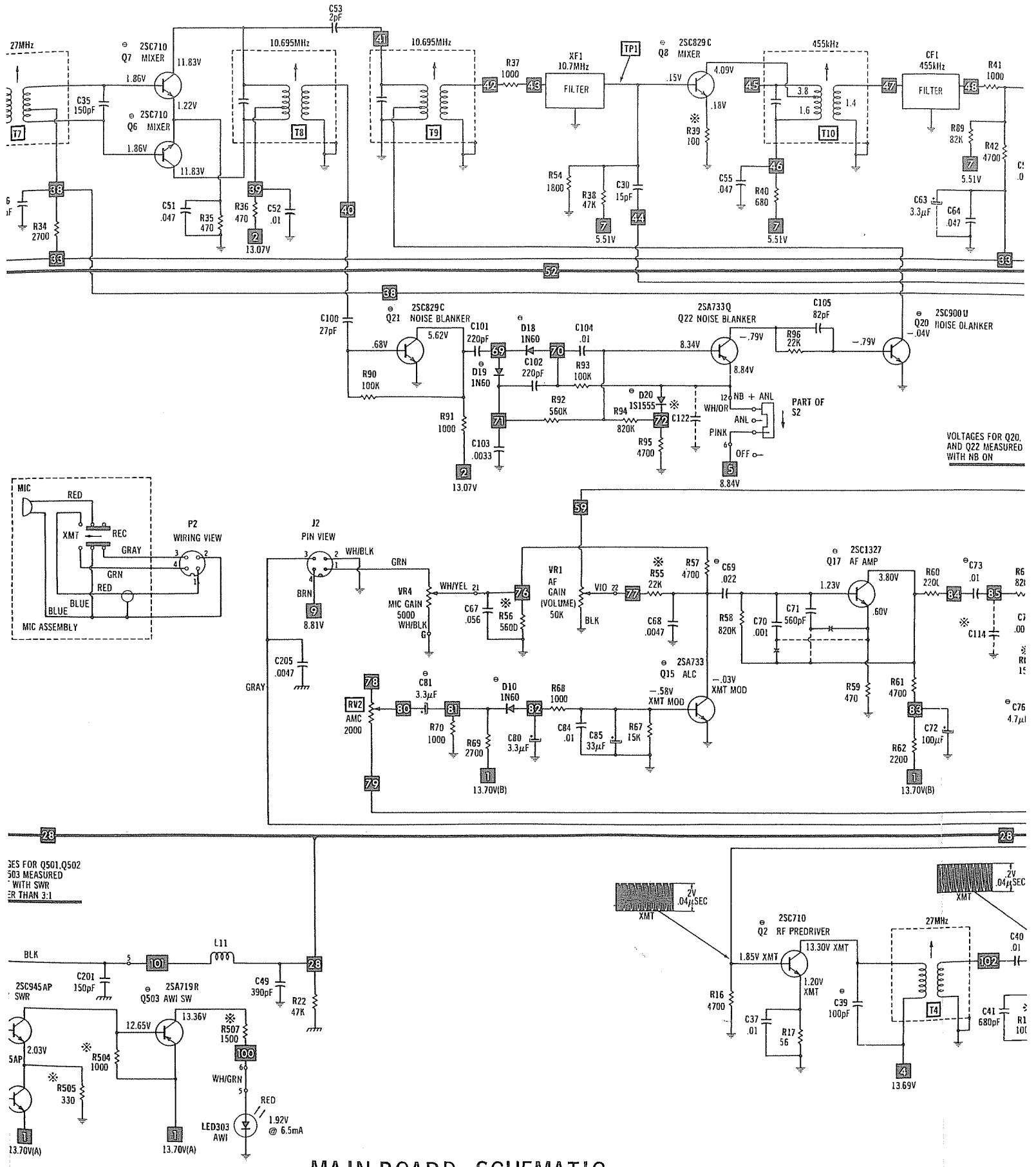

MAIN BOARD SCHEMATIC

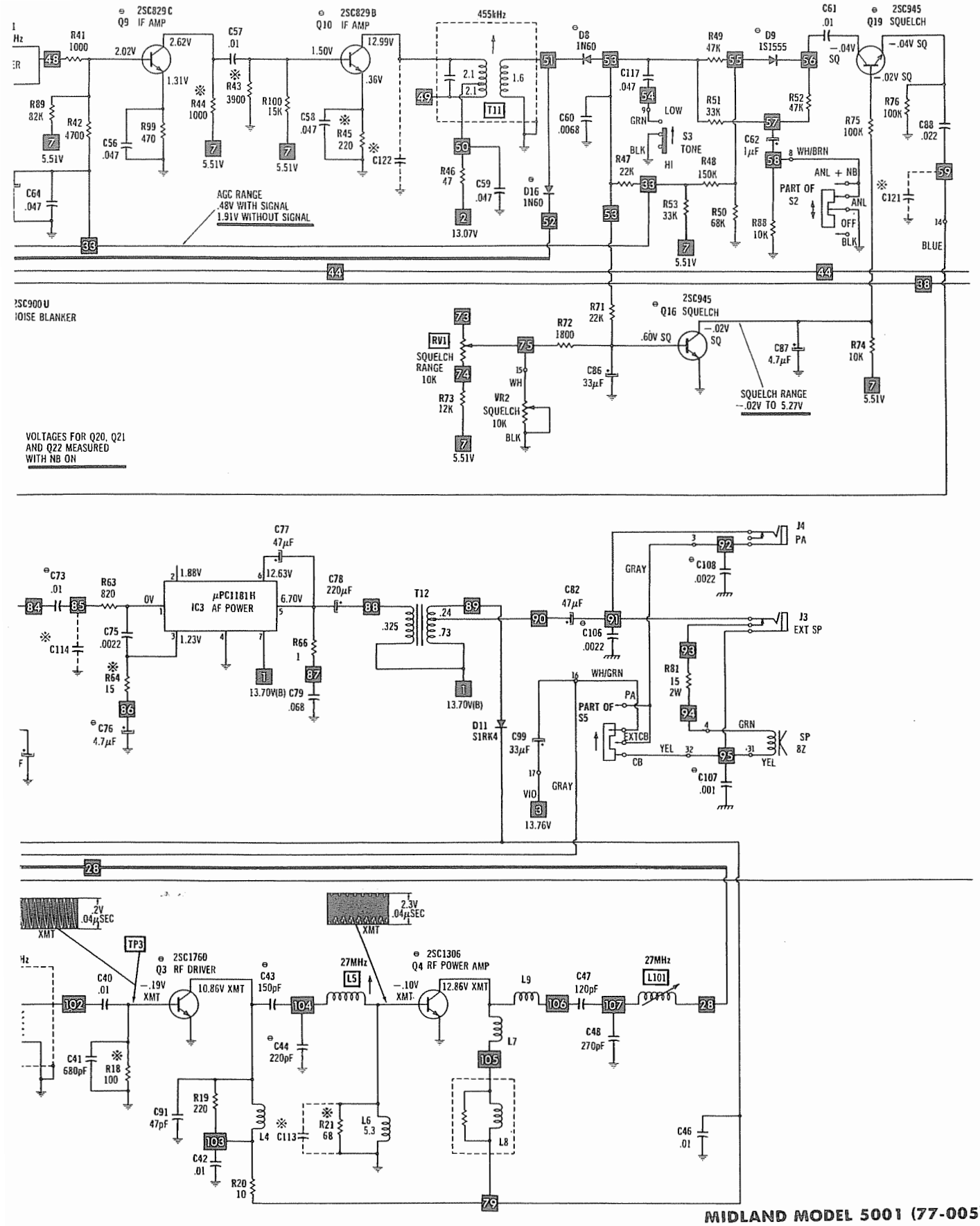

MIDLAND MODEL 5001 (77-005)

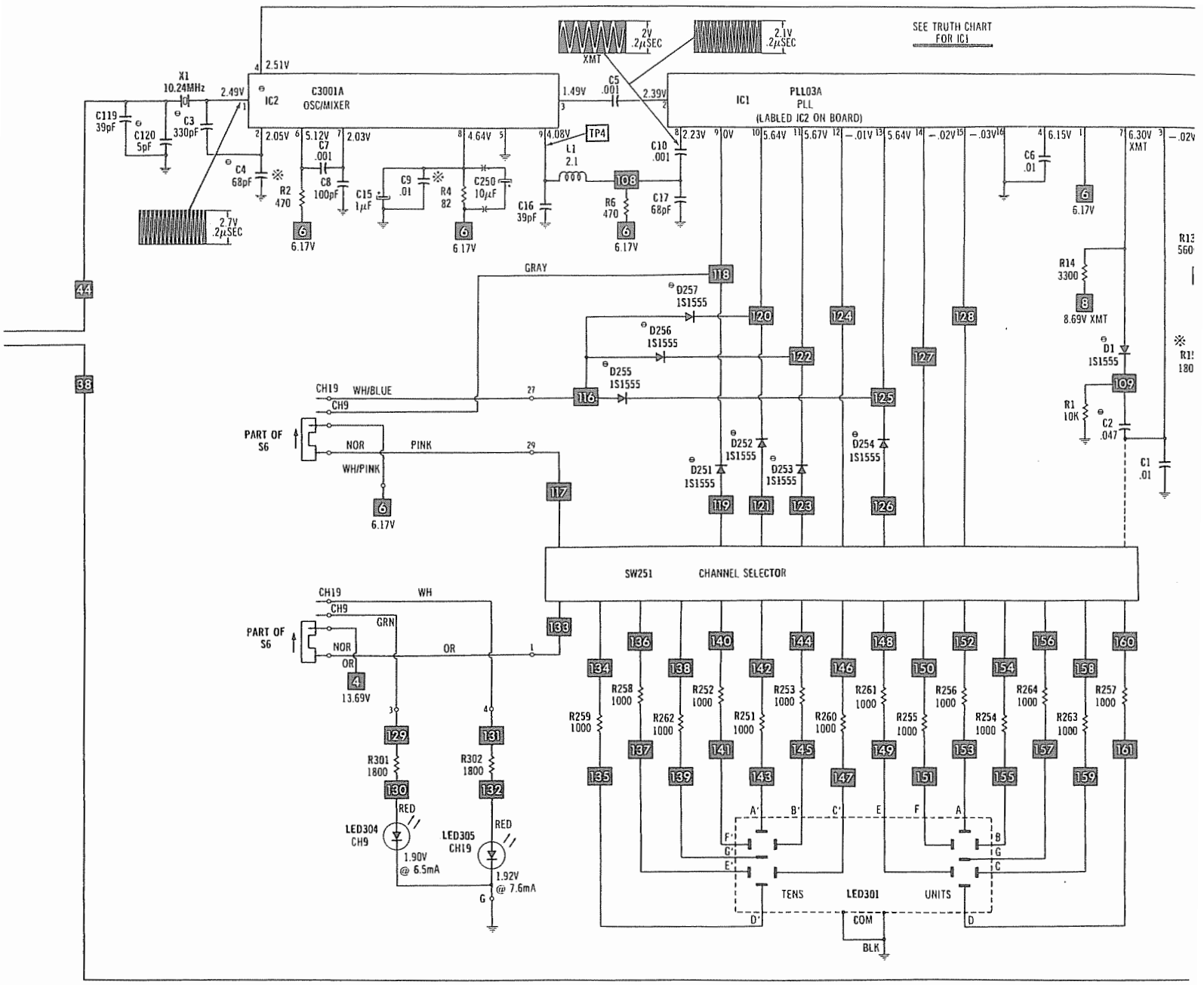

Circuitry not used in some versions.
Circuitry used in some versions.
※ Nominal value
Common tie point
Ground
Chassis
⊖ See parts list
Waveforms and Voltages taken in Channel 19 with switching in receive unless noted.
Item numbers in rectangles appear in the alignment/adjustment instructions.
Supply voltage maintained as shown at input.
Voltages measured with digital meter, no signal.
Controls adjusted for normal operation.
Terminal identification may not be found on unit.
Resistors are 1/2W or less, 5% unless noted.
Value in ( ) used in some versions.
Arrow head(s) at coils and transformers indicates accessibility of tuning slug(s).

Q1,Q11, Q12,Q13 BOTTOM VIEW

A PHOTOFACT STANDARD NOTATION SCHEMATIC WITH CIRCUITRACE™

P

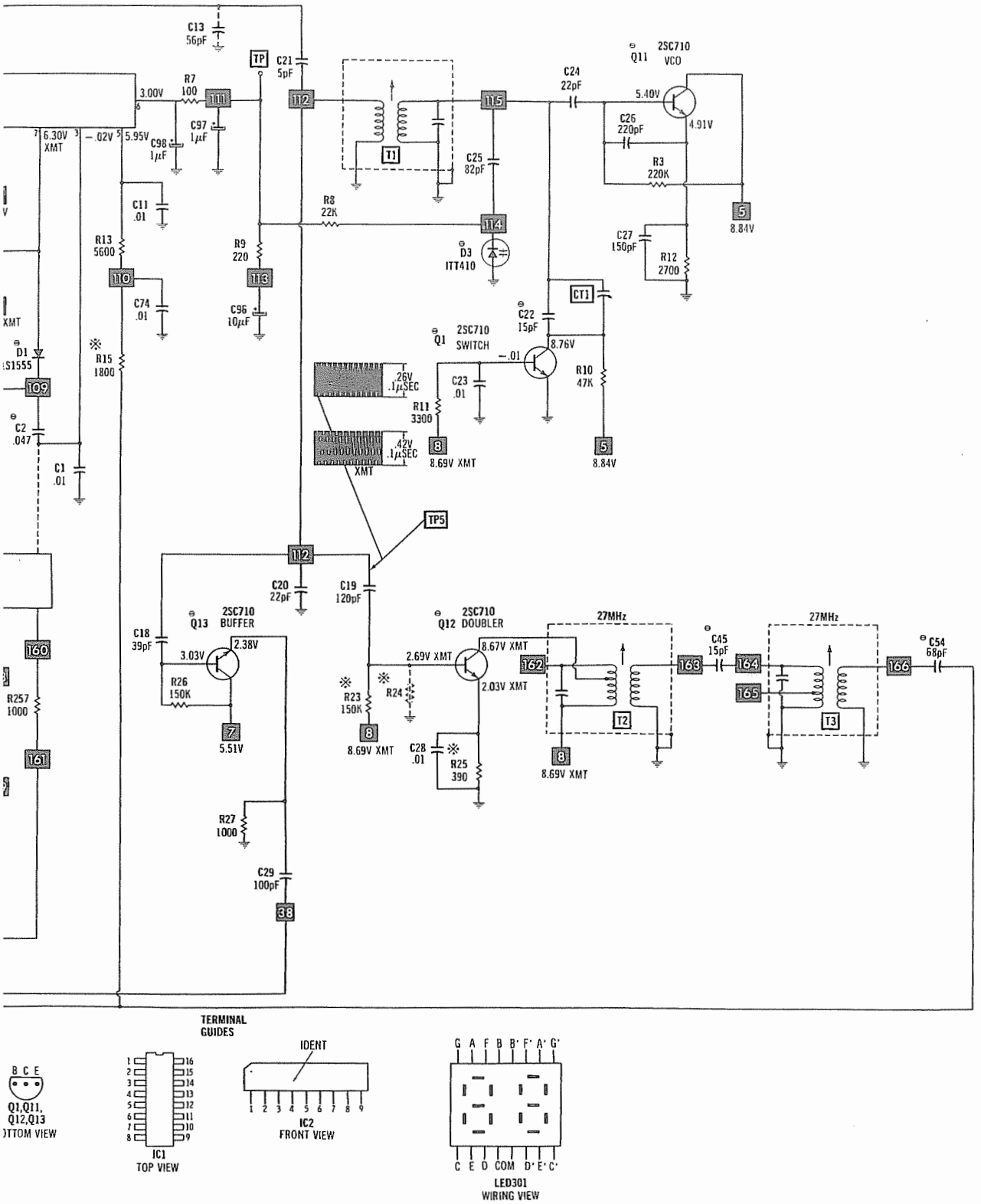

PLL SCHEMATIC

PARTS LIST AND DESCRIPTION (CONTINUED)

(When ordering parts, state Model, Part Number, and Description.)

CAPACITORS (cont)

ITEM No.	RATING	MFGR. PART No.	REPLACEMENT DATA			
			CORNELL-DUBILIER PART No.	MALLORY PART No.	SPRAGUE PART No.	
					Q-LINE	GENERAL LINE
C120	5 50V 10% (1)		MP06P8	CN0568		10TCC-V68
C201	150 50V			CN0315		10TCC-T15
C202	.01 50V			MAG5011		
C203	.01 50V			MAG5011		
C204	.0047 50V (1)		GP4700	GP247		5GA-047
C205	.0047 50V		GP4700	GP247		5GA-047
C206	.0047 50V (1)		GP4700	GP247		5GA-047
C207	.047 50V		DPMS2S47	EWF1A147	QF1-171	1PB-S47
C208	.047 50V		DPMS2S47	EWF1A147	QF1-171	1PB-S47
C209	.01 50V			MAG5011		
C210	.047 50V		DPMS2S47	EWF1A147	QF1-171	1PB-S47
C211	.047 50V		DPMS2S47	EWF1A147	QF1-171	1PB-S47
C250	10 50V		NP010	CN0410	QCC2-15	10TCC-010
C501	.01 50V			MAG5011		
C503	.01 50V			MAG5011		
C504	.01 50V			MAG5011		
C505	.01 50V			MAG5011		
C506	.01 50V			MAG5011		
CT1	Trimmer 1-15pF	77-123006				

(1) Value varies.

CONTROLS (All wattages 1/2 watt, or less, unless listed)

ITEM No.	FUNCTION	RESISTANCE	REPLACEMENT DATA		
			MFGR. PART No.	MALLORY PART No.	TRW PART No.
RV1	Squelch Range	10K	77-164020	RVA0911H103	U260R103R
RV2	AMC	2000	77-164021	RVA0911H252	U260R252B
RV3	Signal Meter	20K	77-164022	RVA0911H253	U260R253B
RV501	AWI	20K	77-164024	RVA0911V253	X260R253B
RV502	SWR	10K	77-164023	RVA0911V103	X260R103B
VR1	AF Gain/Switch (Volume)	50K	77-160017		
VR2	Squelch	10K	77-166014		
VR3	RF Gain	10K	77-166014		
VR4	Mic Gain	5000	77-166009		
VR5	Calibrate	10K	77-166014		

COILS (RF-IF)

ITEM No.	FUNCTION	REPLACEMENT DATA			REMARKS
		PART No.	OTHER IDENTIFICATION	MILLER PART No.	
L1	RF Choke	77-176024	180A		
L2	RF Choke	77-176075			
L3	RF Choke	77-178003			
L4	RF Choke	77-176077	022E		
L5	RF Driver (27MHz)	77-176079			
L6	RF Choke	77-176078	680A		
L7	RF Choke	77-176049			
L8	RF Choke	77-176027			
L9	RF Choke	77-176076			
L10	Final (27MHz)	77-176074			
L11	Antenna	77-176004			
L12	RF Choke	77-176078	680A		
T1	VCO	77-176083			
T2	Doubler (27MHz)	77-176081	10CB003		
T3	Doubler (27MHz)	77-176081			
T4	RF Predriver (27MHz)	77-090027	10CP005M		
T5	Rec Antenna	77-176086	ETR0333		
T6	RF Amp (27MHz)	77-176080	ETR0334		
T7	RF Amp (27MHz)	77-176082	10CM003M		
T8	Mixer (10.695MHz)	77-176085			
T9	Mixer (10.695MHz)	77-176084	10MA017S		
T10	IF (455kHz)	77-090004			
T11	IF (455kHz)	77-090006	ET10129		

FILTER CHOKE

ITEM No.	RATINGS			REPLACEMENT DATA			NOTES
	CURRENT (Measured)	DC RES.	INDUCTANCE (0 CURRENT 1000~)	MFGR. PART No.	THORDARSON PART No.	TRIAD PART No.	
CH1	1.39A	.23	3.3mH	77-178043			

PARTS LIST AND DESCRIPTION (CONTINUED)

(When ordering parts, state Model, Part Number, and Description.)

TRANSFORMER (Audio Output)

ITEM No.	IMPEDANCE		REPLACEMENT DATA			NOTES
	PRI.	SEC. 1	MFGR. PART No.	THORDARSON PART No.	TRIAD PART No.	
T12	2	8 SEC. 2 12.5	77-090026			

SPEAKER

ITEM No.	TYPE	REPLACEMENT DATA		NOTES
		MFGR. PART No.	QUAM PART No.	
SP	3" PM, 8 Ohms	77-060006	30A05Z8R	

FUSE DEVICES

ITEM No.	DESCRIPTION	REPLACEMENT DATA						
		PART No.		BUSS PART No.		LITTELFUSE PART No.		WORKMAN PART No.
		DEVICE	HOLDER	DEVICE	HOLDER	DEVICE	HOLDER	DEVICE
F1	2A Quick-acting		77-034005	AGC-2	HRK	312-002	150145	FG2-2

MISCELLANEOUS

ITEM No.	PART NAME	PART No.	NOTES
CF1	Filter	77-179018	455kHz
J1	Jack	77-153010	Antenna
J2	Jack	77-153011	Microphone
J3	Jack	77-153008	External Speaker
J4	Jack	77-153008	PA
J5	Jack	77-153009	DC
LED301	LED	77-202020	Channel Indicator 1.95V @ 12.1mA
LED302	LED	77-202019	RX/TX 1.94V @ 14mA RX/ 1.92V @ 8.3mA TX
LED303	LED	77-202021	AWI Warning 1.92V @ 6.5mA
LED304	LED	77-202021	CH. 9 1.90V @ 6.5mA
LED305	LED	77-202021	CH. 19 1.92V @ 7.6 mA
M1	Meter	77-200014	S/RF/SWR (Includes PL1 Lamp)
PL1	Pilot Lamp		5V @ 58mA (Part of M1 Meter)
S2	Switch	77-183008	ANL/CB
S3	Switch	77-163002	Tone
S4	Switch	77-183008	ANL/CB
S5	Switch	77-183008	ANL/CB
S6	Switch	77-183008	ANL/CB
SW251	Switch	77-180016	Channel Selector
X1	Crystal	77-128020	10.24MHz
XF1	Filter	77-179019	Crystal 10.7MHz
	Microphone	77-038018	
	Board	77-070027	LED Display
	Board	77-070029	Antenna Warn
	Board	77-070030	LED Display
	P.C. Board	77-070026	Main
	P.W.B. Assembly	77-075047	Main
	Board	77-075048	LED
	Board	77-075049	Antenna Warning
	Board	77-075050	LED
	Joint PC	77-070028	
	Joint PC	77-070031	

CABINETS & CABINET PARTS (When ordering specify model, chassis & color)

ITEM	PART No.
Cover, Bottom	77-011017
Cover, Top	77-011016
Escutcheon Assembly	77-011015

ITEM	PART No.
Knob, Channel	77-115029
Knob, VR	77-110020
Panel, Front	77-010046

For Supplier Address See PHOTOFACT Index

NOTE

Repair or adjustment of transmitter circuits must be under supervision of a person with first-or second-class radiotelephone license.
(Refer to FCC Rules and Regulations Part 95, Subpart C & D.)

The frequency of the transmitter should be checked periodically with a secondary frequency standard to insure proper and legal operation.

Best results will be obtained when adjusting the final RF output circuit if the antenna normally used is connected and the chassis is as nearly in the cabinet as possible.

Connect either 50-ohm dummy load or the normally used antenna system.

MODEL SSB-500

MANUFACTURER'S SPECIFICATIONS

GENERAL

Channels	40 – AM/Single Sideband
Frequency Range	26.965 to 27.405 MHz
Frequency Control	Phaselock Synthesizer
Frequency Tolerance	±0.005%
Frequency Stability	±0.002%
Operating Temperature Range	–30°C to +50°C
Microphone	Plug-in type dynamic with volume control
Input Voltage	13.8V DC (Positive or Negative ground)
Current Drain	Receive 1.5A at maximum audio output 0.5A standby (no signal).
Size	10-6/10" L. X 8"W. X 2-1/2" H.
Weight	6 lbs.
Antenna Connector	Standard American type
Semiconductors	41 Transistors, 7 FETS,60 Diodes, 7 ICs
Meter	Illuminated, indicates relative power output and received signal strength
Power Bandswidth	10.5 to 16V

TRANSMITTER

Power	4 Watts - AM (max. allowed by FCC) 12 Watts PEP-SSB (max. allowed by FCC)
Modulation	High and low level Class B amplitude modulation (AM)
Modulation Capability	95% Typical (AM)
Harmonic Suppression and Spurious Emmissions	Better than FCC requirement
Frequency Response	400 Hz to 2.5 kHz – AM and SSB
Output Impedance	50 Ohms, unbalanced
Output Indicators	Meter shows relative RF output power, Tx red lamp indicates transmit mode.

RECEIVER

Sensitivity – AM	.7μV for 10 db S/N
Sensitivity – SSB	.25μV for 10 db S/N
Selectivity	6 db at 4.2 kHz 60 db at 7 kHz (AM and SSB)
Image Rejection	More than 50 db
Automatic Gain Control (AGC)	Change in audio output less than 10 db from 10μV to .5 volts
Squelch	Adjustable – threshold less than .5μV
Audio Frequency Response	400Hz to 2.5 kHz
Distortion	Less than 10% at 3.0 watts output
Adjacent Channel Rejection	AM: -60 db, SSB: -65db
Cross Modulation	More than 55 db
IF Frequency	AM and SSB, 7.8 MHz
Clarifier	±1kHz
Noise Blanker	RF type, effective on AM and SSB
Audio Output Power	More than 3 watts into 8 ohms
Built-in Speaker	8 ohms, dynamic
External Speaker (optional)	Disables internal speaker when connected

PUBLIC ADDRESS (PA) SYSTEM

Power Output	3 watts into external speaker
External Speaker for PA (optional)	When PA switch is in PA mode, the unit functions as a public address system.

Courtesy of the Manufacturer

HOWARD W. SAMS & CO., INC. Indianapolis, Indiana 46206

 9CF1088

ALIGNMENT INSTRUCTIONS

CAUTION: Use isolation transformer or observe polarity when connecting test equipment.
Maintain line voltage at 120V AC. Allow a 15-minute warm-up period.
Adjustments made with 13.8 volt DC input.
Connect low sides of test equipment to ground unless specified otherwise.
Connect 50-ohm dummy load or antenna before keying transmitter.
Connect microphone.
Suggested Alignment Tools:

	GC ELECTRONICS:
L1 thru L5, L7, L8, L16, L17, L24, L37 thru L39 ...	9440
L30, L32	8728,8728A,9091

SYNTHESIZER ALIGNMENT

TEST EQUIPMENT	TRANSCEIVER	ADJUST	REMARKS
Input of frequency counter to TP11 (IC7 Pin 4).	Ch. 19, AM		Check for 10.240MHz.
Input of frequency counter to TP10 (IC7 Pin 5).	Ch. 19, AM	CT8	Adjust for 5.120MHz.
Input of oscilloscope to TP6 (FET4, G1).	Ch. 19, AM	L24	Adjust for maximum RF (120mV typical). (See Figure 1.)
Input of frequency counter to TP6 (FET4, G1).	Ch. 19, AM Clarifier Midrange	CT6	Adjust for 33.855MHz ±20Hz.
Input of frequency counter to TP6 (FET4, G1).	Ch. 19, USB Clarifier Midrange	CT4	Adjust for 33.8574MHz ±20Hz.
Input of frequency counter to TP6 (FET4, G1).	Ch. 19, LSB Clarifier Midrange	CT5	Adjust for 33.8526MHz ±20Hz.
Input of DC meter to TP7 (Junction of R151 and R152).	Ch. 1, AM	L17	Adjust for 2.00 volts. Check channel 40 for approximately 2.70 volts.
Input of oscilloscope to TP8 (L16 Secondary).	Ch. 19, AM	L16	Adjust for maximum RF (1.6 volts typical). (See Figure 2.)
Input of frequency counter to TP8 (L16 Secondary).	Ch. 1, AM Clarifier Midrange		Check for 34.765MHz. Check all channels. (See Truth Chart for correct frequencies.)
Input of frequency counter to TP8 (L16 Secondary).	Ch. 1, USB Clarifier Midrange		Check for 34.7675MHz. Check all channels. (See Truth Chart for correct frequencies.)
Input of frequency counter to TP8 (L16 Secondary).	Ch. 1, LSB Clarifier Midrange		Check for 34.7625MHz. Check all channels. (See Truth Chart for correct frequencies.)
Input of frequency counter to TP12 (TR30 Collector).	Ch. 1, AM		Check for .910MHz. Check all channels. (See Truth Chart for correct frequencies.)
Input of frequency counter to TP9 (TR28 Emitter).	Ch. 1, USB	CT2	Adjust for 7.8025MHz ±5Hz.
	Ch. 1, LSB	CT3	Adjust for 7.7975MHz ±5Hz.
Input of frequency counter to antenna jack.	Ch. 1, AM, XMT	VR9	Adjust for 26.965MHz.

RECEIVER ALIGNMENT

Connect an AC VTVM or AF wattmeter across speaker voice coil.
Adjust volume control to obtain a suitable indication.
Set generator output low enough to prevent AGC limiting.
RF Gain On, Clarifier Midrange, Squelch MINIMUM, NB Switch Off, ANL Switch Off.

AM

TEST EQUIPMENT	TRANSCEIVER	ADJUST	REMARKS
Output of signal generator thru .01uF to TP13 (FET1, G1). 7.8MHz, 1000Hz @ 30% modulation.	Ch. 19, AM	L8,L7,L5	Adjust for maximum output.
Output of signal generator to antenna jack. 27.185MHz, 1000Hz @ 30% modulation.	Ch. 19, AM	L4,L3	Adjust for maximum output. If necessary, readjust L5, L6, L7 and L8.
Inject a 100pps, 1uSec. signal at antenna input. Input of oscilloscope to TP14 (TR2 Collector).	Ch. 19, AM	L1,L2	Adjust for maximum (7.5 volts p-p typical). (See Figure 3.)

RECEIVER ALIGNMENT

Connect an AC VTVM or AF wattmeter across speaker voice coil.
Adjust volume control to obtain a suitable indication.
RF Gain On, Clarifier Midrange, Squelch MINIMUM, ANL Switch Off, NB Switch Off, Volume Maximum.

SSB

TEST EQUIPMENT	TRANSCEIVER	ADJUST	REMARKS
Output of signal generator to antenna jack. 27.186MHz, no modulation. Output .25uV.	Ch. 19, USB	CT1	Adjust for 2 volts audio.

RECEIVER ADJUSTMENTS

Connect an AC VTVM or AF wattmeter across speaker voice coil.
Adjust volume control to obtain a suitable indication.
RF Gain On, Clarifier Midrange, Squelch MINIMUM, NB Switch Off, ANL Switch Off.

TEST EQUIPMENT	TRANSCEIVER	ADJUST	REMARKS
Output of signal generator thru .01uF to antenna jack. 27.185MHz, 1000Hz @ 30% modulation. Output .5uV.	Ch. 19, AM Volume Maximum	VR5	AM RX GAIN Adjust for 2 volts audio.
Output of signal generator thru .01uF to antenna jack. 27.185MHz, 1000Hz @ 30% modulation. Output 50uV.	Ch. 19, AM RF Gain MINIMUM Squelch Maximum	VR2	RF GAIN Adjust for 2 volts audio.
Output of signal generator thru .01uF to antenna jack. 27.185MHz, 1000Hz @ 30% modulation. Output 1000uV.	Ch. 19, AM Squelch Maximum	VR3	SQUELCH RANGE Adjust so that squelch just breaks.
Output of signal generator thru .01uF to antenna jack. 27.185MHz, 1000Hz @ 30% modulation. Output 100uV.	Ch. 19, AM	VR1	SIGNAL METER Adjust for 9 on Signal scale of meter.

TRANSMITTER ALIGNMENT

Connect a 50-ohm, 25-watt dummy load to antenna connector.
NOTE: Be sure to check transmit frequency and power on all active channels after alignment of transmitter.
See page 4 for channel frequencies.

SSB

TEST EQUIPMENT	TRANSCEIVER	ADJUST	REMARKS
Input of RF wattmeter to antenna input. Inject a 1000Hz, 5mV signal at Mic input.	Ch. 19, USB	L39,L38,L37, L32,L30,CT7	Adjust for maximum.
Input of RF wattmeter to antenna input. Inject a 1000Hz, 200mV signal at Mic input.	Ch. 19, USB	CT7	Adjust for 12 watts.

TRANSMITTER ADJUSTMENTS

Connect a 50-ohm, 25-watt dummy load to antenna connector.
NOTE: Be sure to check transmit frequency and power on all active channels after adjustment of transmitter.
See page 4 for channel frequencies.

TEST EQUIPMENT	TRANSCEIVER	ADJUST	REMARKS
Connect current meter in series with circuit at TP4.	Ch. 19, USB, XMT, No modulation.	VR15	BIAS Adjust for 40mA.
Connect current meter in series with circuit at TP2.	Ch. 19, USB, XMT, No modulation.	VR16	BIAS Adjust for 15mA.
Connect a RF wattmeter to antenna connector.	Ch. 19, USB, XMT, No modulation.	VR4	BALANCE Adjust VR4 for MINIMUM RF.
	Ch. 19, AM, XMT	VR8	AM POWER Adjust for 4 watts maximum.
Inject a 1000Hz, 5mV signal at Mic input. Input of oscilloscope or modulation meter to antenna jack.	Ch. 19, AM, XMT	VR408,VR7	MIC GAIN & AM AMC Turn VR7 (from top) fully clockwise. Adjust VR6 for 50% modulation. Increase audio to 200mV. Adjust VR7 for 100% modulation maximum. (See Figure 4.)
Connect a RF wattmeter to antenna connector.	Ch. 19, AM, XMT	VR12	TX POWER METER Adjust so the Power meter agrees with the RF wattmeter.

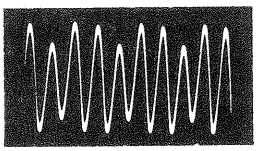
Figure 1

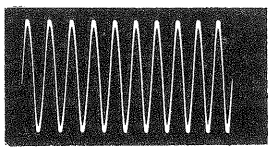
Figure 2

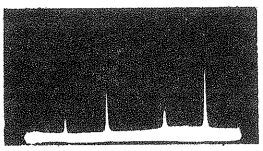
Figure 3

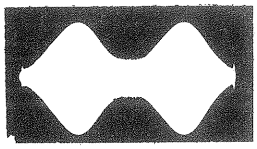
Figure 4

TRUTH CHART

CHANNEL	1 = 4.68 Volts 0 = 0 Volts IC7 PROGRAM DIVIDER PINS 10	11	12	13	14	15	16	17	AM (REC) SYNTHESIZER OUTPUT IN MHz AT TP8	USB (REC & XMT) AM (XMT) SYNTHESIZER OUTPUT IN MHz AT TP8	LSB (REC & XMT) SYNTHESIZER OUTPUT IN MHz AT TP8	AM,USB,LSB (REC & XMT) DIVIDER INPUT IN MHz AT TP12
1	0	1	0	1	1	0	1	1	34.765	34.7675	34.7625	.910
2	0	1	0	1	1	1	0	0	34.775	34.7775	34.7725	.920
3	0	1	0	1	1	1	0	1	34.785	34.7875	34.7825	.930
4	0	1	0	1	1	1	1	1	34.805	34.8075	34.8025	.950
5	0	1	1	0	0	0	0	0	34.815	34.8175	34.8125	.960
6	0	1	1	0	0	0	0	1	34.825	34.8275	34.8225	.970
7	0	1	1	0	0	0	1	0	34.835	34.8375	34.8325	.980
8	0	1	1	0	0	1	0	0	34.855	34.8575	34.8525	1.000
9	0	1	1	0	0	1	0	1	34.865	34.8675	34.8625	1.010
10	0	1	1	0	0	1	1	0	34.875	34.8775	34.8725	1.020
11	0	1	1	0	0	1	1	1	34.885	34.8875	34.8825	1.030
12	0	1	1	0	1	0	0	1	34.905	34.9075	34.9025	1.050
13	0	1	1	0	1	0	1	0	34.915	34.9175	34.9125	1.060
14	0	1	1	0	1	0	1	1	34.925	34.9275	34.9225	1.070
15	0	1	1	0	1	1	0	0	34.935	34.9375	34.9325	1.080
16	0	1	1	0	1	1	1	0	34.955	34.9575	34.9525	1.100
17	0	1	1	0	1	1	1	1	34.965	34.9675	34.9625	1.110
18	0	1	1	1	0	0	0	0	34.975	34.9775	34.9725	1.120
19	0	1	1	1	0	0	0	1	34.985	34.9875	34.9825	1.130
20	0	1	1	1	0	0	1	1	35.005	35.0075	35.0025	1.150
21	0	1	1	1	0	1	0	0	35.015	35.0175	35.0125	1.160
22	0	1	1	1	0	1	0	1	35.025	35.0275	35.0225	1.170
23	0	1	1	1	1	0	0	0	35.055	35.0575	35.0525	1.200
24	0	1	1	1	0	1	1	0	35.035	35.0375	35.0325	1.180
25	0	1	1	1	0	1	1	1	35.045	35.0475	35.0425	1.190
26	0	1	1	1	1	0	0	1	35.065	35.0675	35.0625	1.210
27	0	1	1	1	1	0	1	0	35.075	35.0775	35.0725	1.220
28	0	1	1	1	1	0	1	1	35.085	35.0875	35.0825	1.230
29	0	1	1	1	1	1	0	0	35.095	35.0975	35.0925	1.240
30	0	1	1	1	1	1	0	1	35.105	35.1075	35.1025	1.250
31	0	1	1	1	1	1	1	0	35.115	35.1175	35.1125	1.260
32	0	1	1	1	1	1	1	1	35.125	35.1275	35.1225	1.270
33	1	0	0	0	0	0	0	0	35.135	35.1375	35.1325	1.280
34	1	0	0	0	0	0	0	1	35.145	35.1475	35.1425	1.290
35	1	0	0	0	0	0	1	0	35.155	35.1575	35.1525	1.300
36	1	0	0	0	0	0	1	1	35.165	35.1675	35.1625	1.310
37	1	0	0	0	0	1	0	0	35.175	35.1775	35.1725	1.320
38	1	0	0	0	0	1	0	1	35.185	35.1875	35.1825	1.330
39	1	0	0	0	0	1	1	0	35.195	35.1975	35.1925	1.330
40	1	0	0	0	0	1	1	1	35.205	35.2075	35.2025	1.350

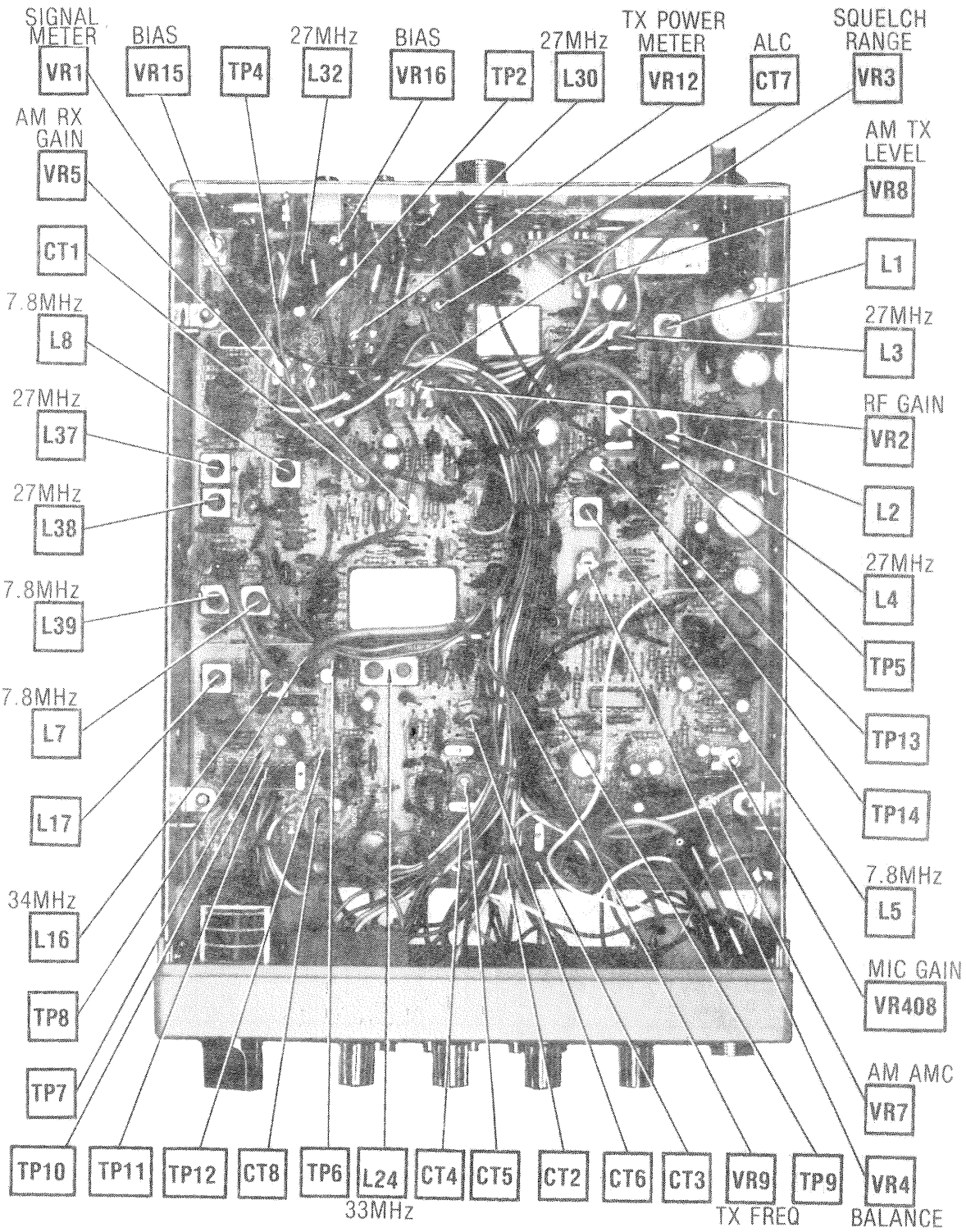

CHASSIS-BOTTOM

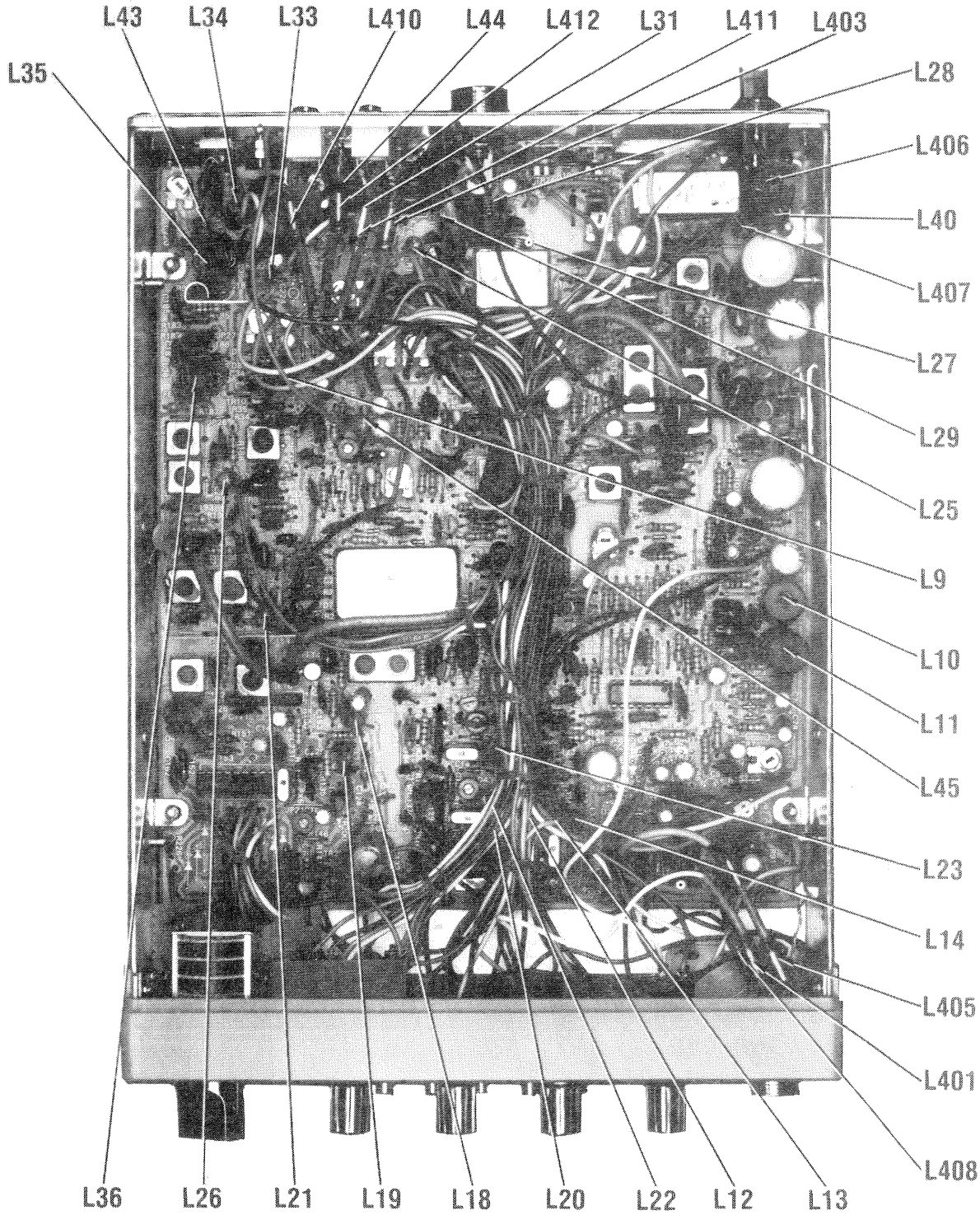

CHASSIS-BOTTOM

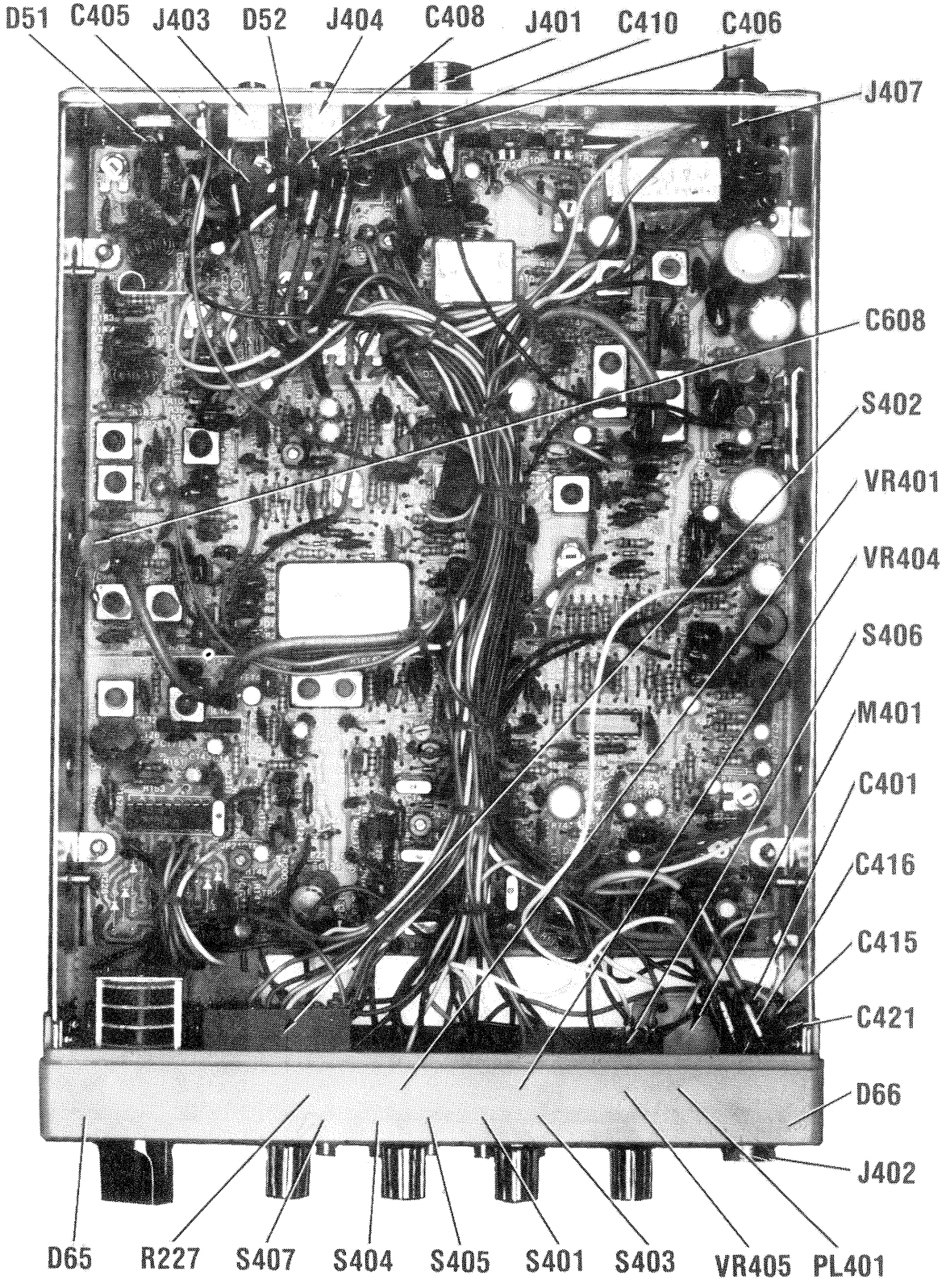

CHASSIS-BOTTOM

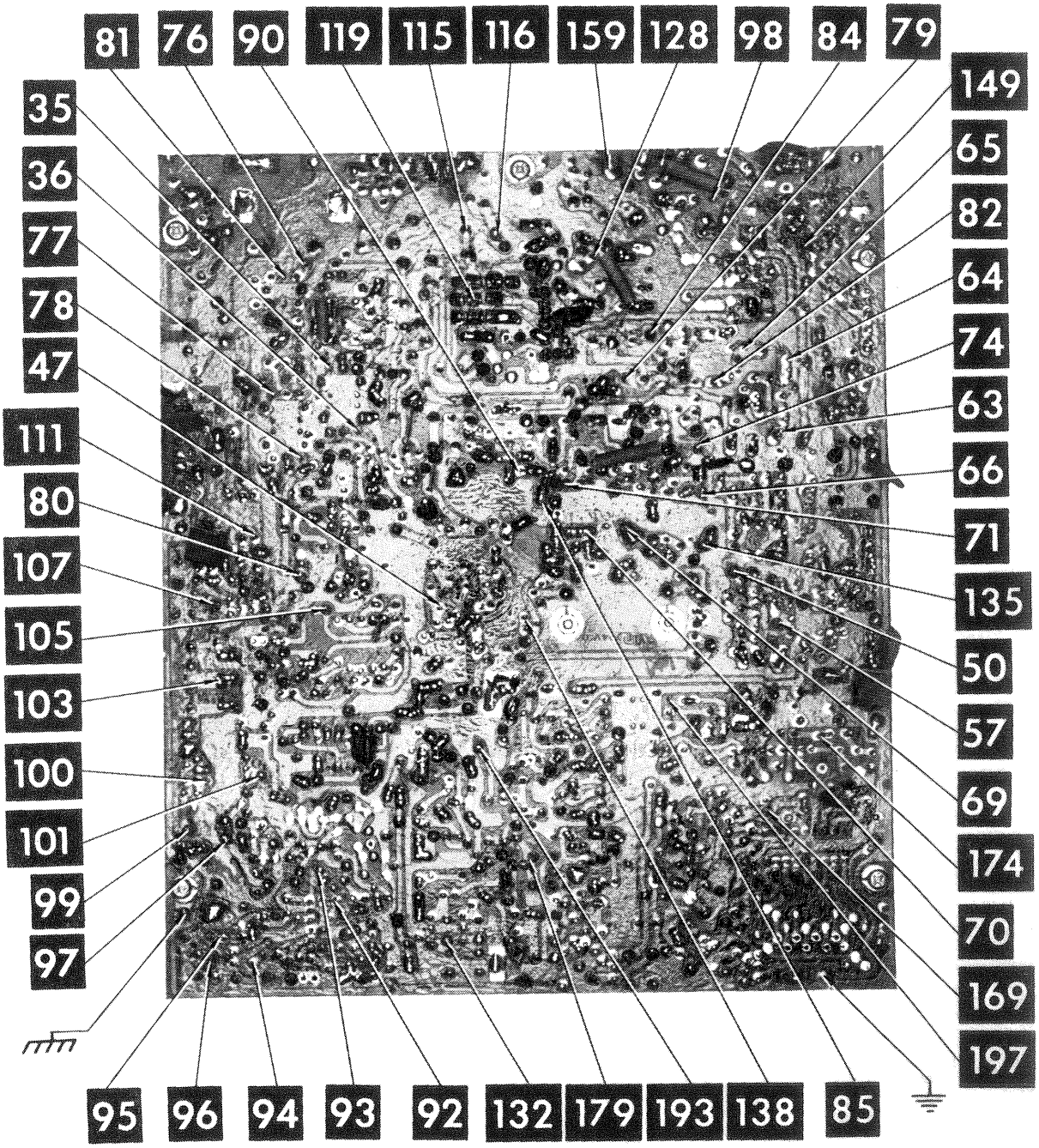
81
76
90
119
115
116
159
128
98
84
79
149
35
36
77
78
47
111
80
107
105
103
100
101
99
97
65
82
64
74
63
66
71
135
50
57
69
174
70
169
197
95
96
94
93
92
132
179
193
138
85

MAIN BOARD

A Howard W. Sams CIRCUITRACE® Photo

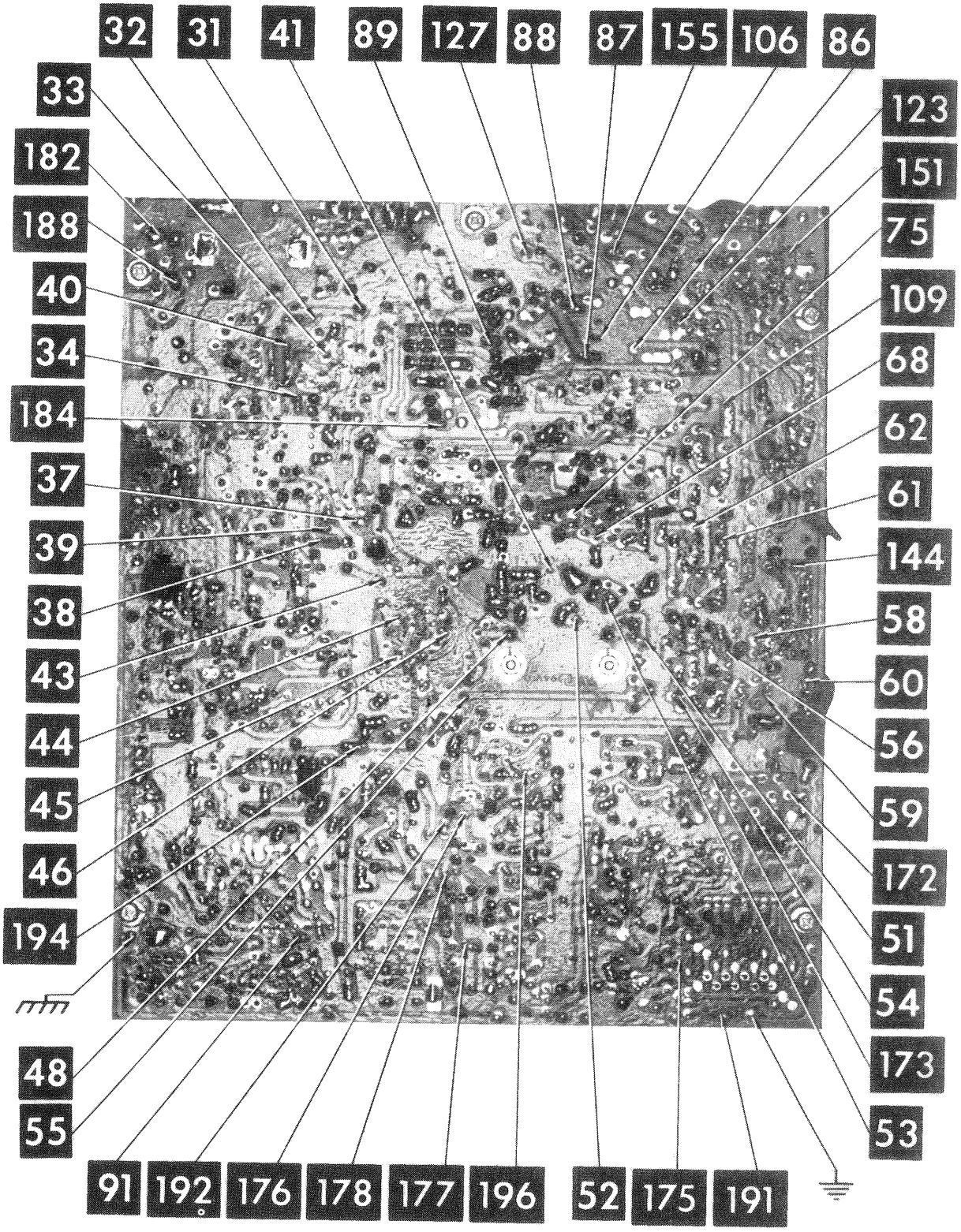

MAIN BOARD

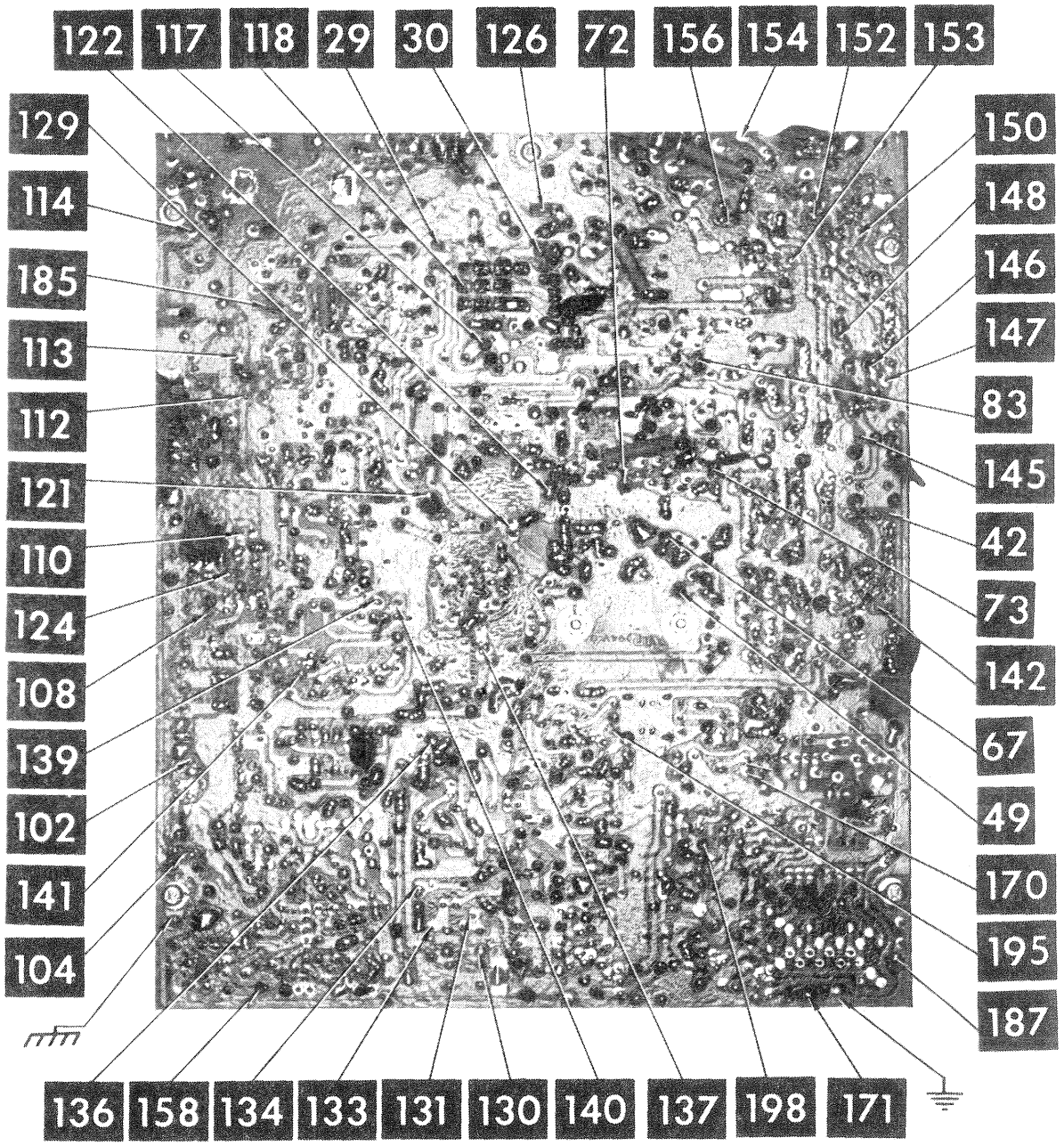
122
117
118
29
30
126
72
156
154
152
153
129
114
185
113
112
121
110
124
108
139
102
141
104
150
148
146
147
83
145
42
73
142
67
49
170
195
187
136
158
134
133
131
130
140
137
198
171

MAIN BOARD

A Howard W. Sams CIRCUITRACE® Photo

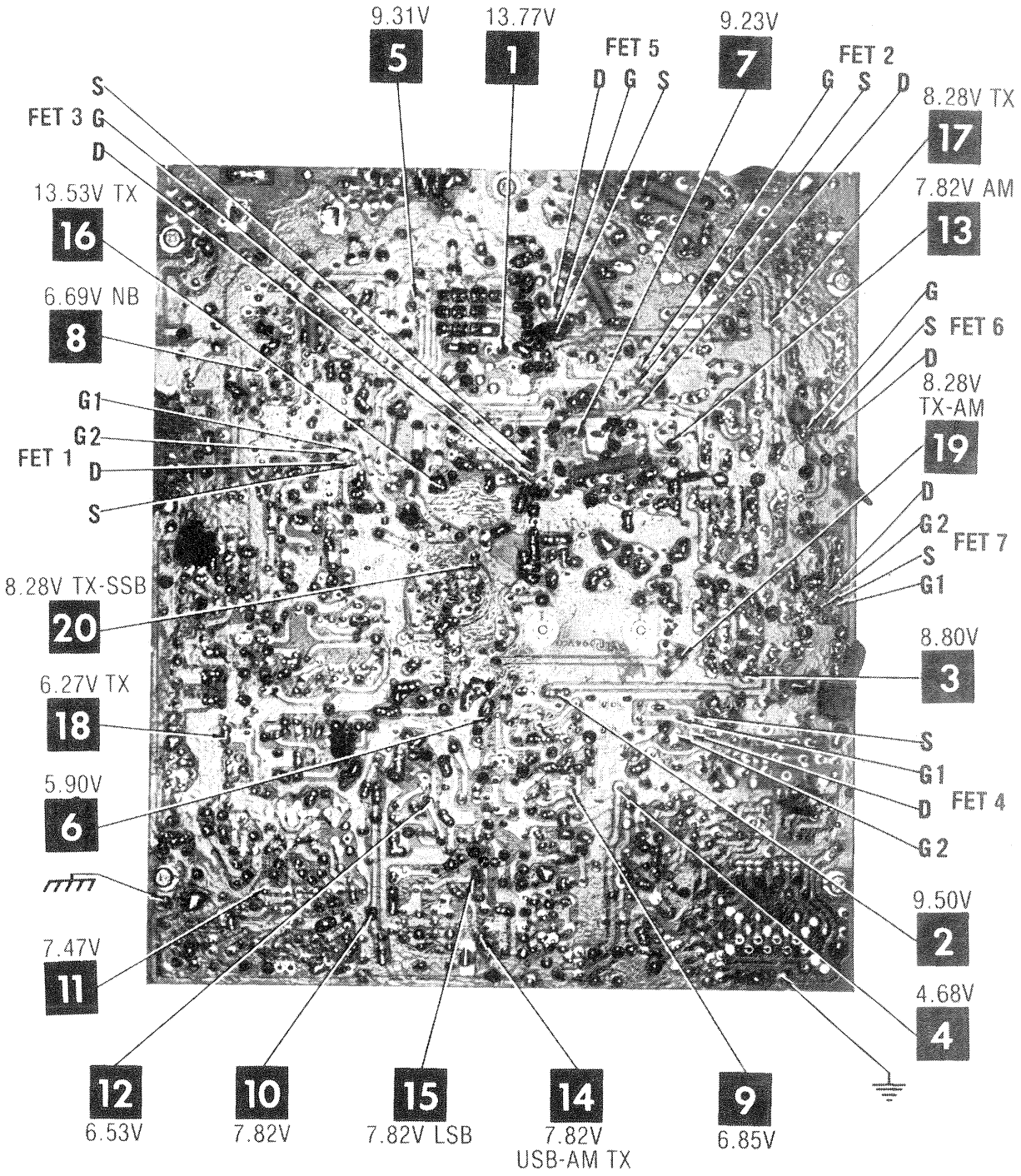

MAIN BOARD

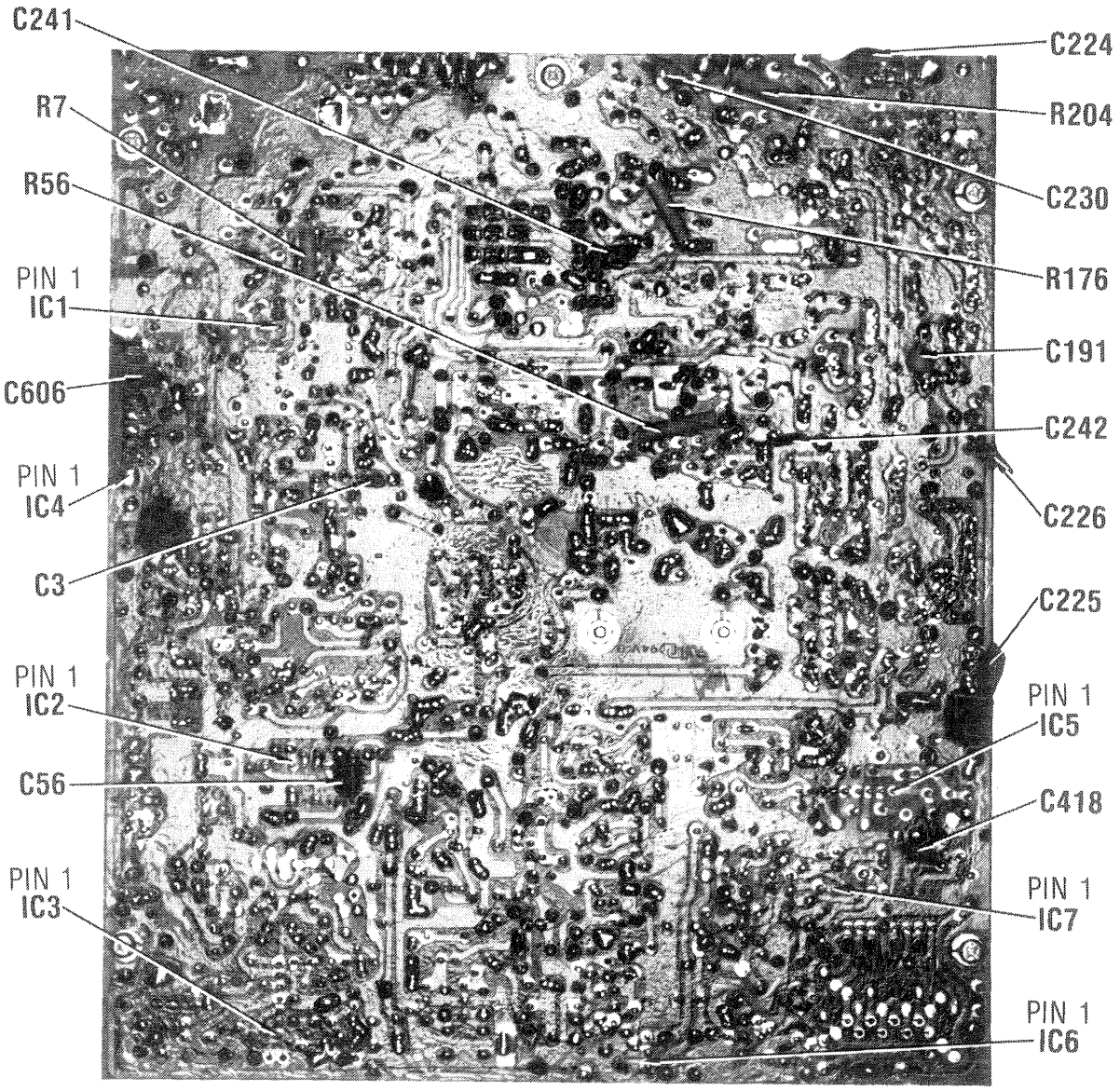
C241
R7
R56
PIN 1
IC1
C606
PIN 1
IC4
C3
PIN 1
IC2
C56
PIN 1
IC3
C224
R204
C230
R176
C191
C242
C226
C225
PIN 1
IC5
C418
PIN 1
IC7
PIN 1
IC6

MAIN BOARD

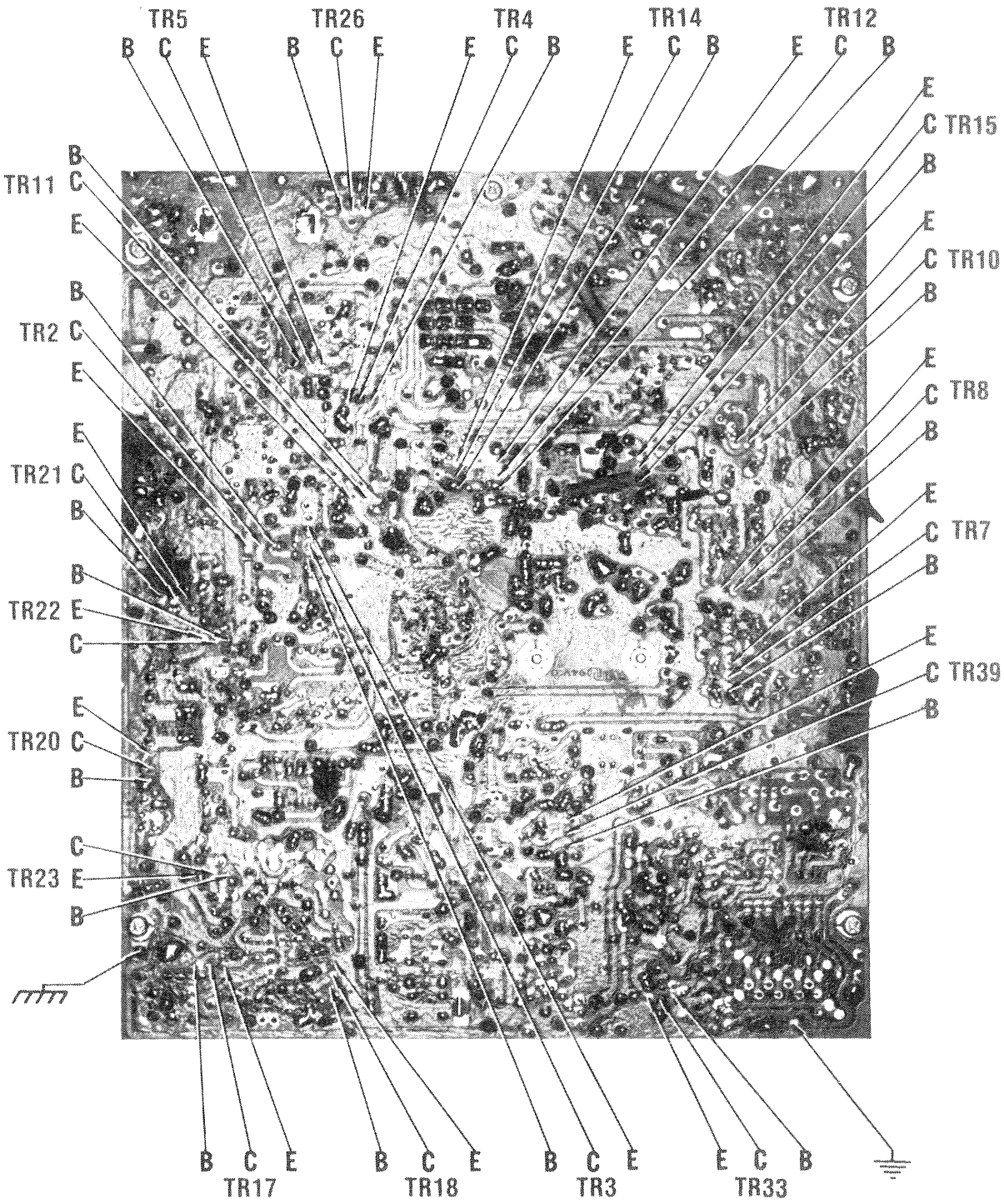
TR5
B C E
TR26
B C E
TR4
E C B
TR14
E C B
TR12
E C B
E
C TR15
B
TR11 B
C
E
E
C TR10
B
TR2 B
C
E
E
C TR8
B
TR21 E
C
B
E
C TR7
B
TR22 B
E
C
E
C TR39
B
TR20 E
C
B
C
TR23 C
E
B
B C E
TR17
B C E
TR18
B C E
TR3
E C B
TR33

MAIN BOARD

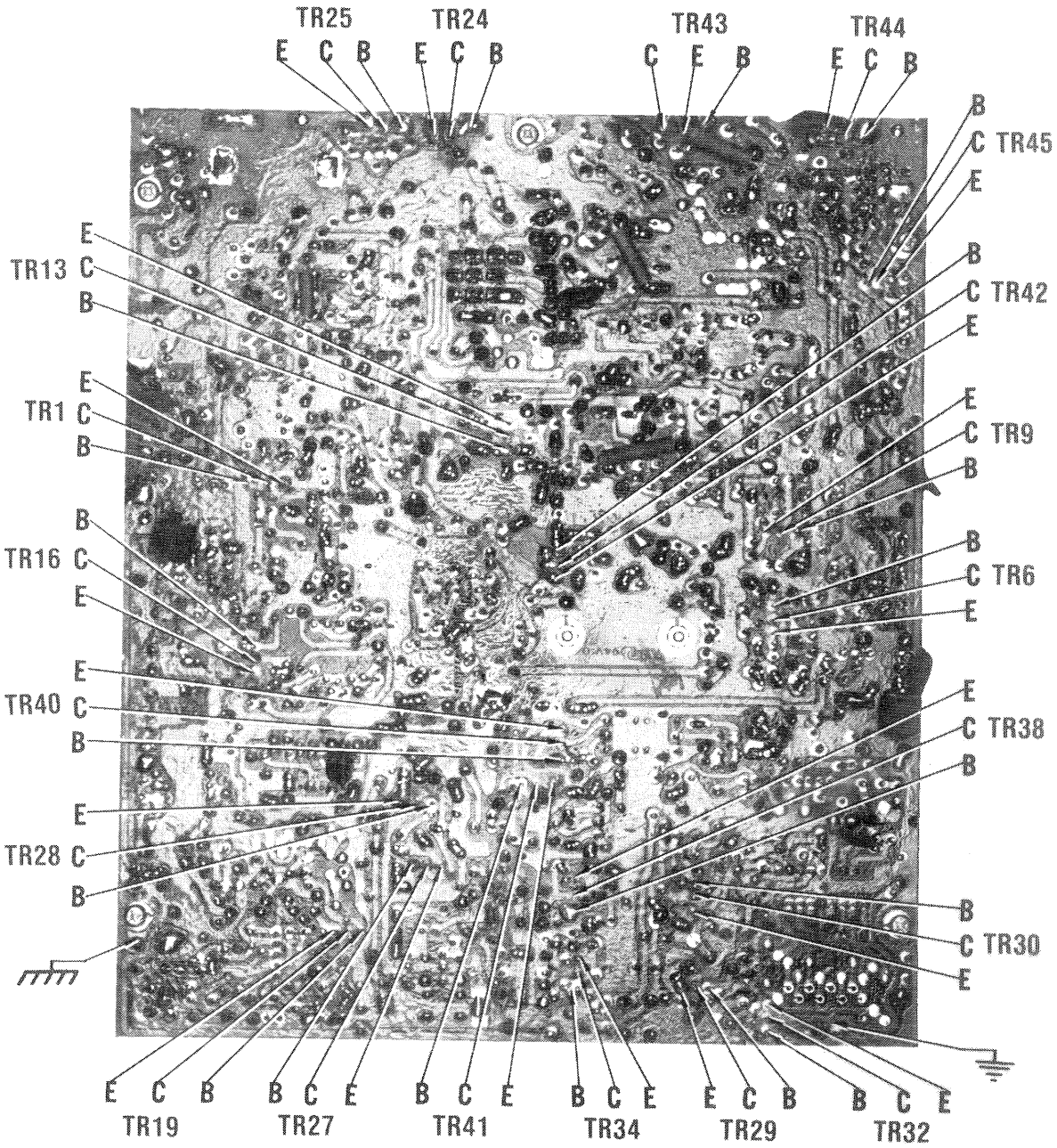
TR25
E C B
TR24
E C B
TR43
C E B
TR44
E C B
B
C TR45
E
TR13 E C B
B
C TR42
E
TR1 E C B
E
C TR9
B
TR16 B C E
B
C TR6
E
TR40 E C B
E
C TR38
B
TR28 E C B
B
C TR30
E
E C B
TR19
B C E
TR27
B C E
TR41
B C E
TR34
E C B
TR29
B C E
TR32

MAIN BOARD

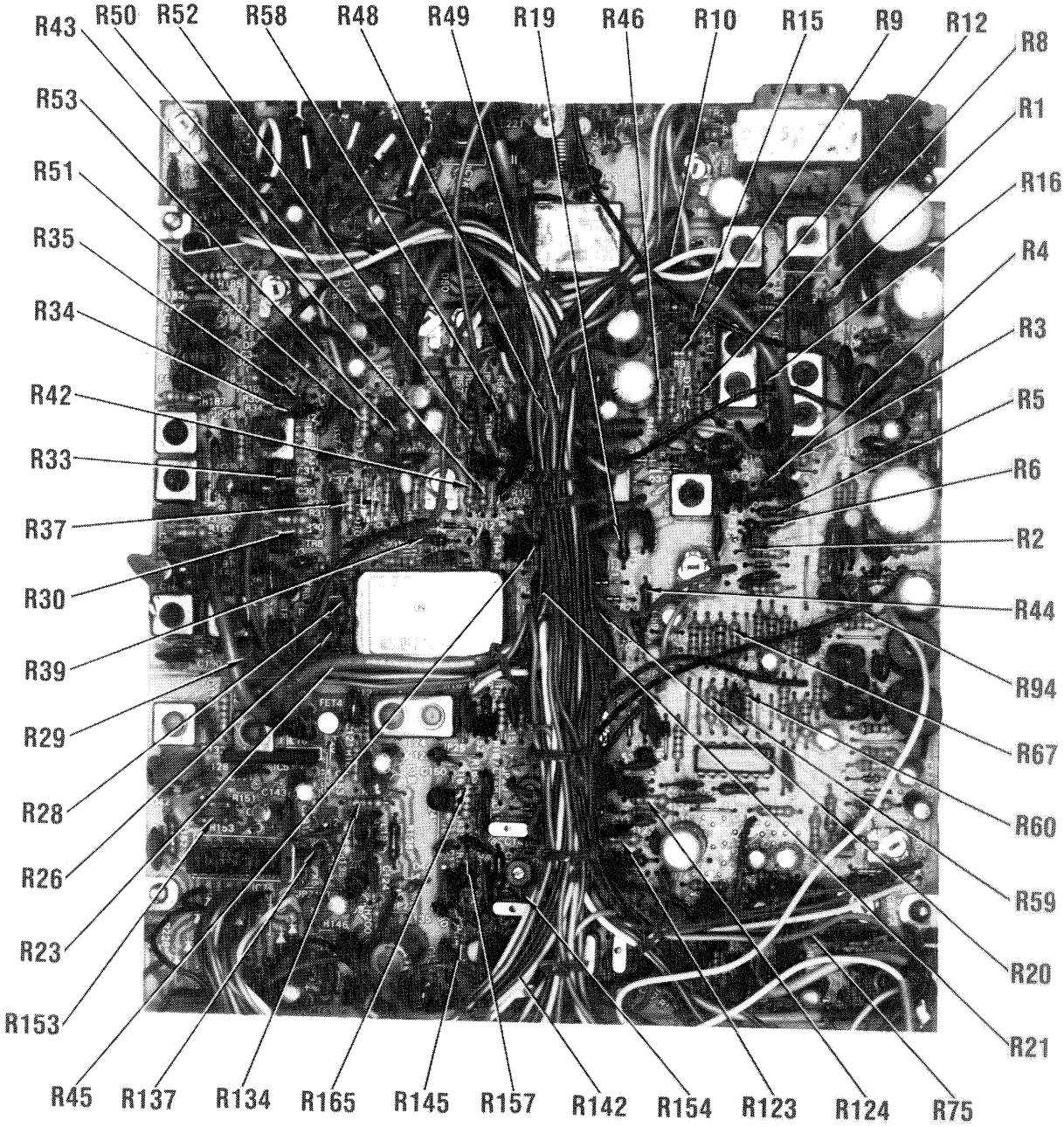
R43
R50
R52
R58
R48
R49
R19
R46
R10
R15
R9
R12
R8
R53
R1
R51
R16
R35
R4
R34
R3
R42
R5
R33
R6
R37
R2
R30
R44
R39
R94
R29
R67
R28
R60
R26
R59
R23
R20
R153
R21
R45
R137
R134
R165
R145
R157
R142
R154
R123
R124
R75

MAIN BOARD

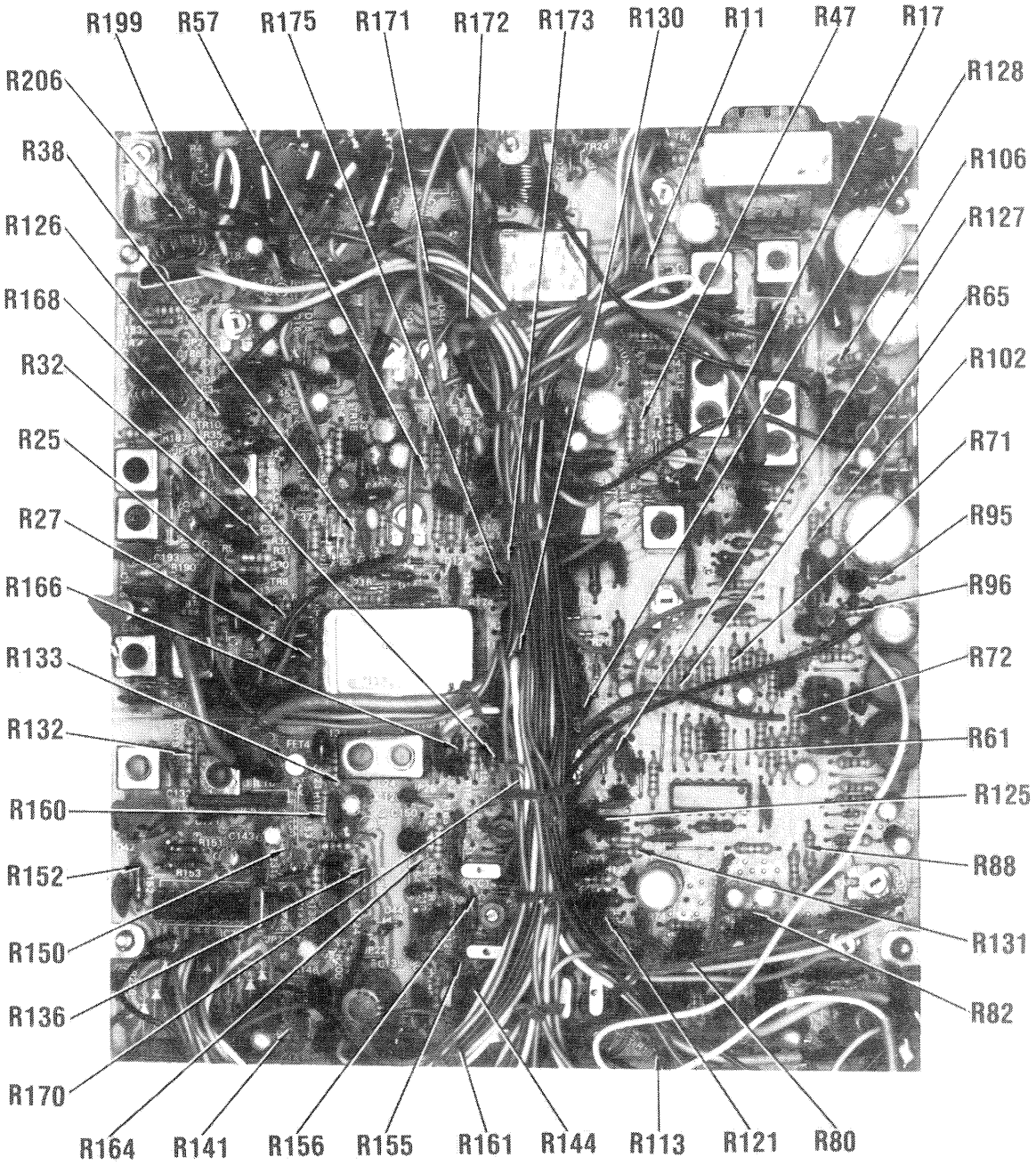
R199
R57
R175
R171
R172
R173
R130
R11
R47
R17
R206
R128
R38
R106
R126
R127
R168
R65
R32
R102
R25
R71
R27
R95
R166
R96
R133
R72
R132
R61
R160
R125
R152
R88
R150
R131
R136
R82
R170
R164
R141
R156
R155
R161
R144
R113
R121
R80

MAIN BOARD

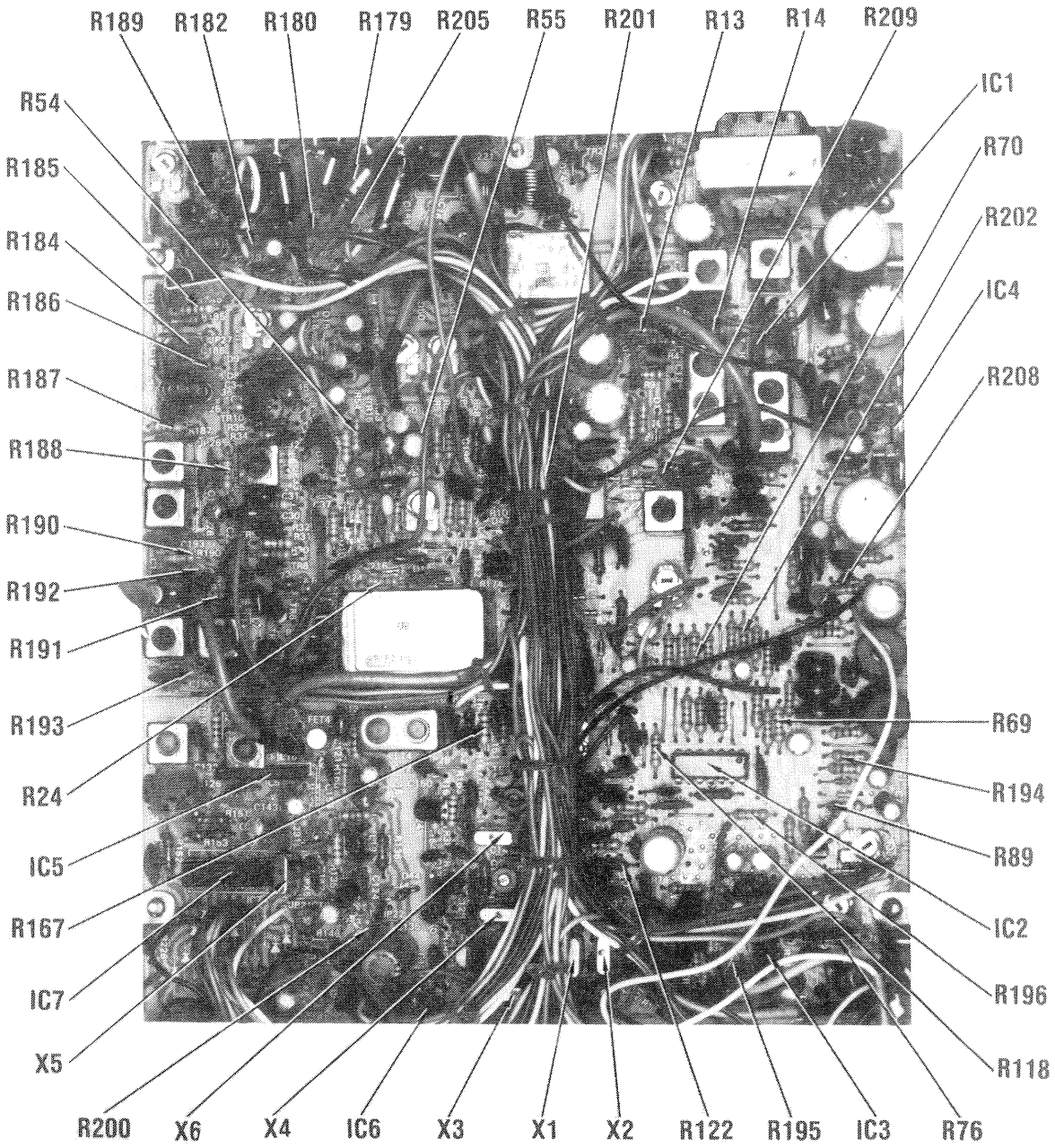
R189
R182
R180
R179
R205
R55
R201
R13
R14
R209
R54
R185
R184
R186
R187
R188
R190
R192
R191
R193
R24
IC5
R167
IC7
X5
R200
X6
X4
IC6
X3
X1
X2
R122
R195
IC3
R76
R118
R196
IC2
R89
R194
R69
R208
IC4
R202
R70
IC1

MAIN BOARD

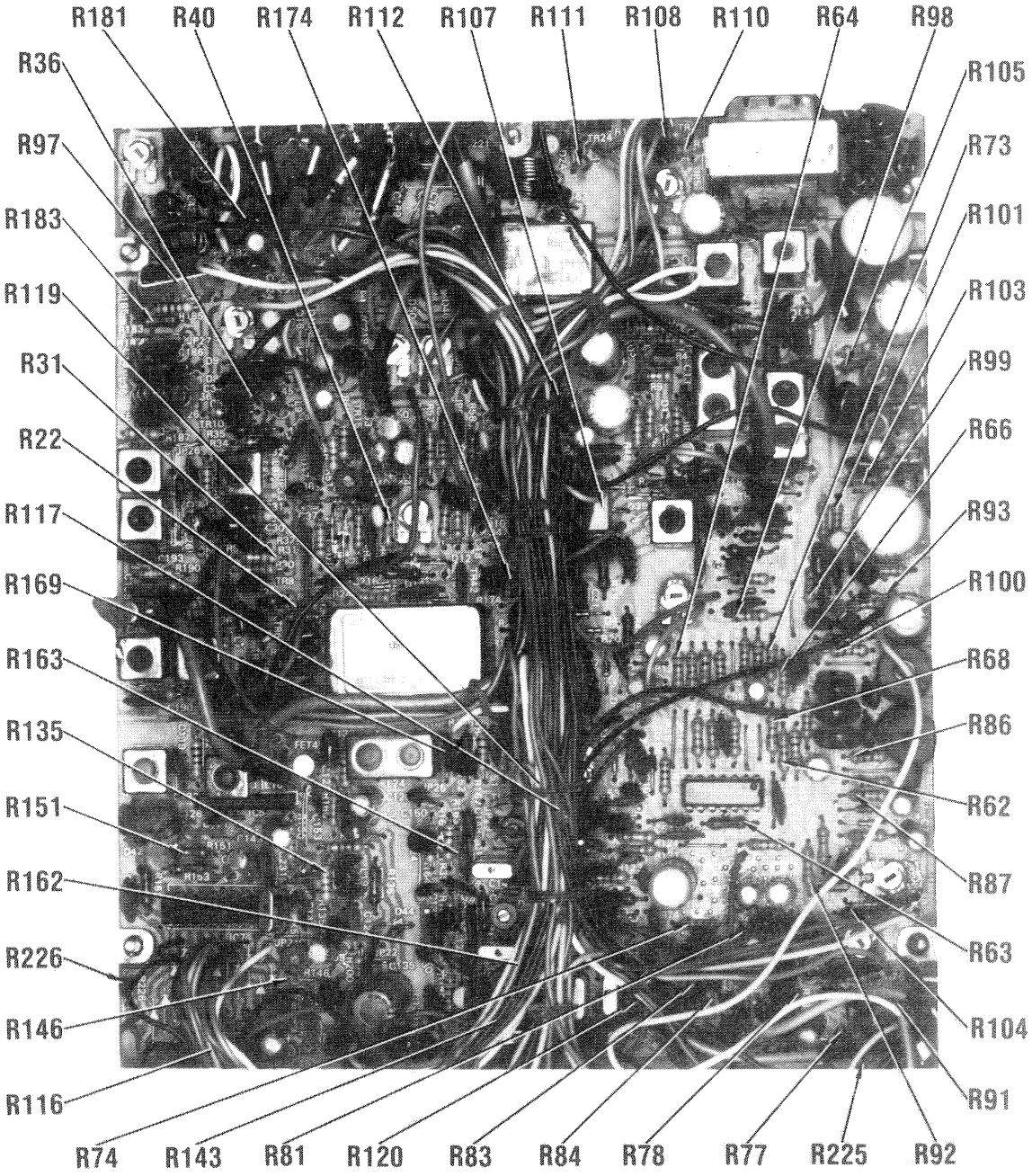
R181
R40
R174
R112
R107
R111
R108
R110
R64
R98
R36
R105
R97
R73
R183
R101
R119
R103
R31
R99
R22
R66
R117
R93
R169
R100
R163
R68
R135
R86
R151
R62
R162
R87
R226
R63
R146
R104
R116
R91
R74
R143
R81
R120
R83
R84
R78
R77
R225
R92

MAIN BOARD

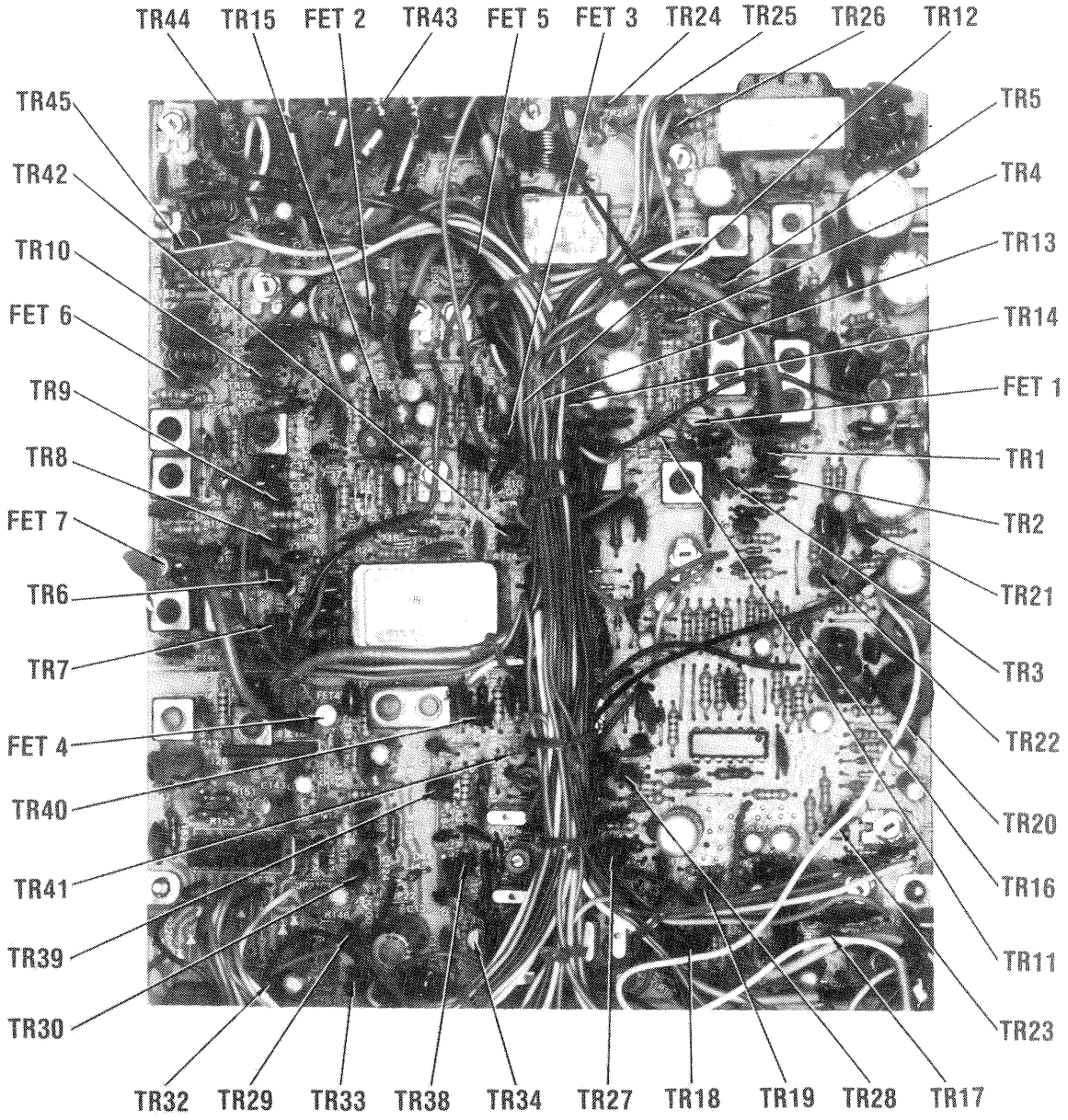
TR44
TR15
FET 2
TR43
FET 5
FET 3
TR24
TR25
TR26
TR12
TR45
TR42
TR10
FET 6
TR9
TR8
FET 7
TR6
TR7
FET 4
TR40
TR41
TR39
TR30
TR5
TR4
TR13
TR14
FET 1
TR1
TR2
TR21
TR3
TR22
TR20
TR16
TR11
TR23
TR32
TR29
TR33
TR38
TR34
TR27
TR18
TR19
TR28
TR17

MAIN BOARD

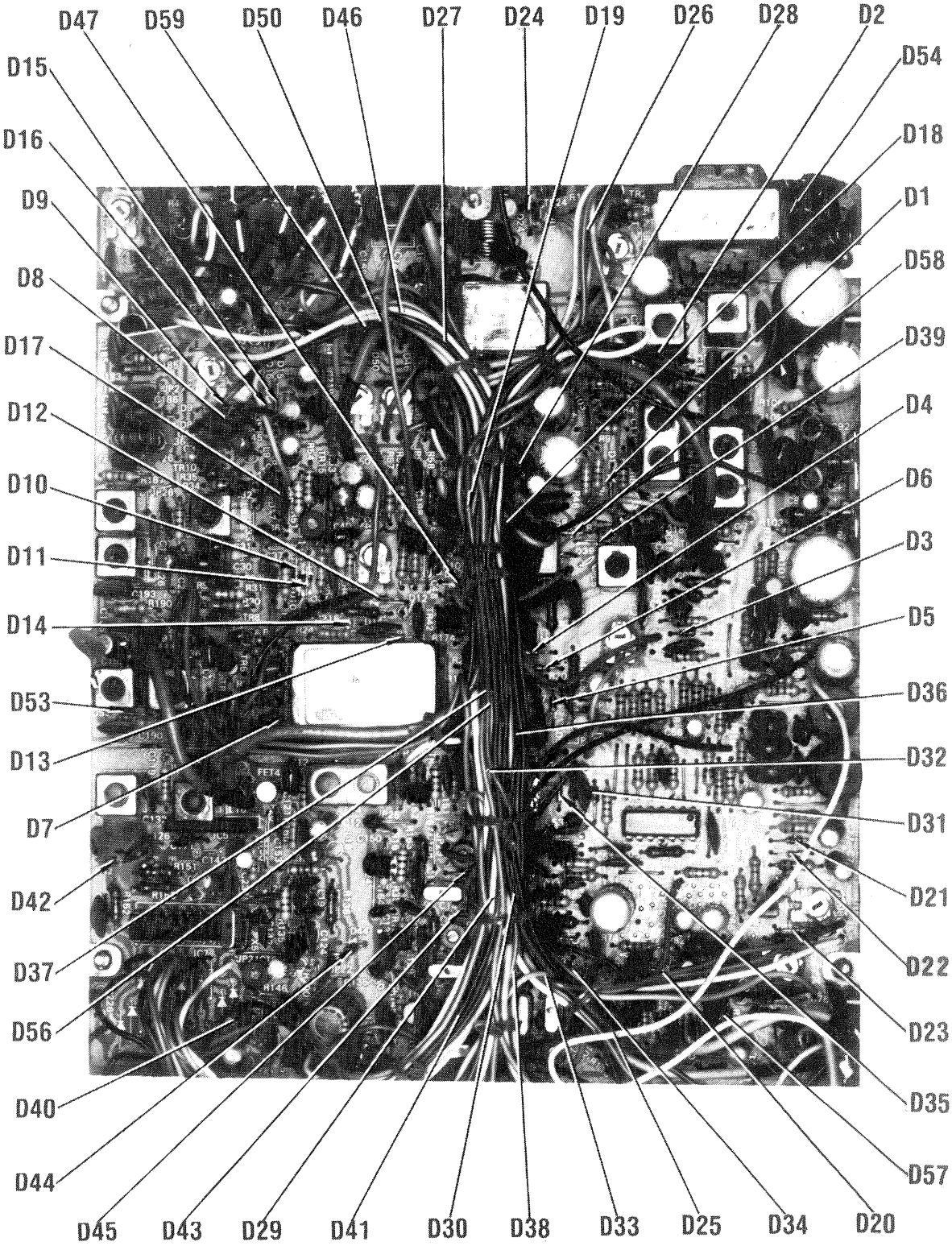
D47
D59
D50
D46
D27
D24
D19
D26
D28
D2
D15
D54
D16
D18
D9
D1
D8
D58
D17
D39
D12
D4
D10
D6
D11
D3
D14
D5
D53
D36
D13
D32
D7
D31
D42
D21
D37
D22
D56
D23
D40
D35
D44
D57
D45
D43
D29
D41
D30
D38
D33
D25
D34
D20

MAIN BOARD

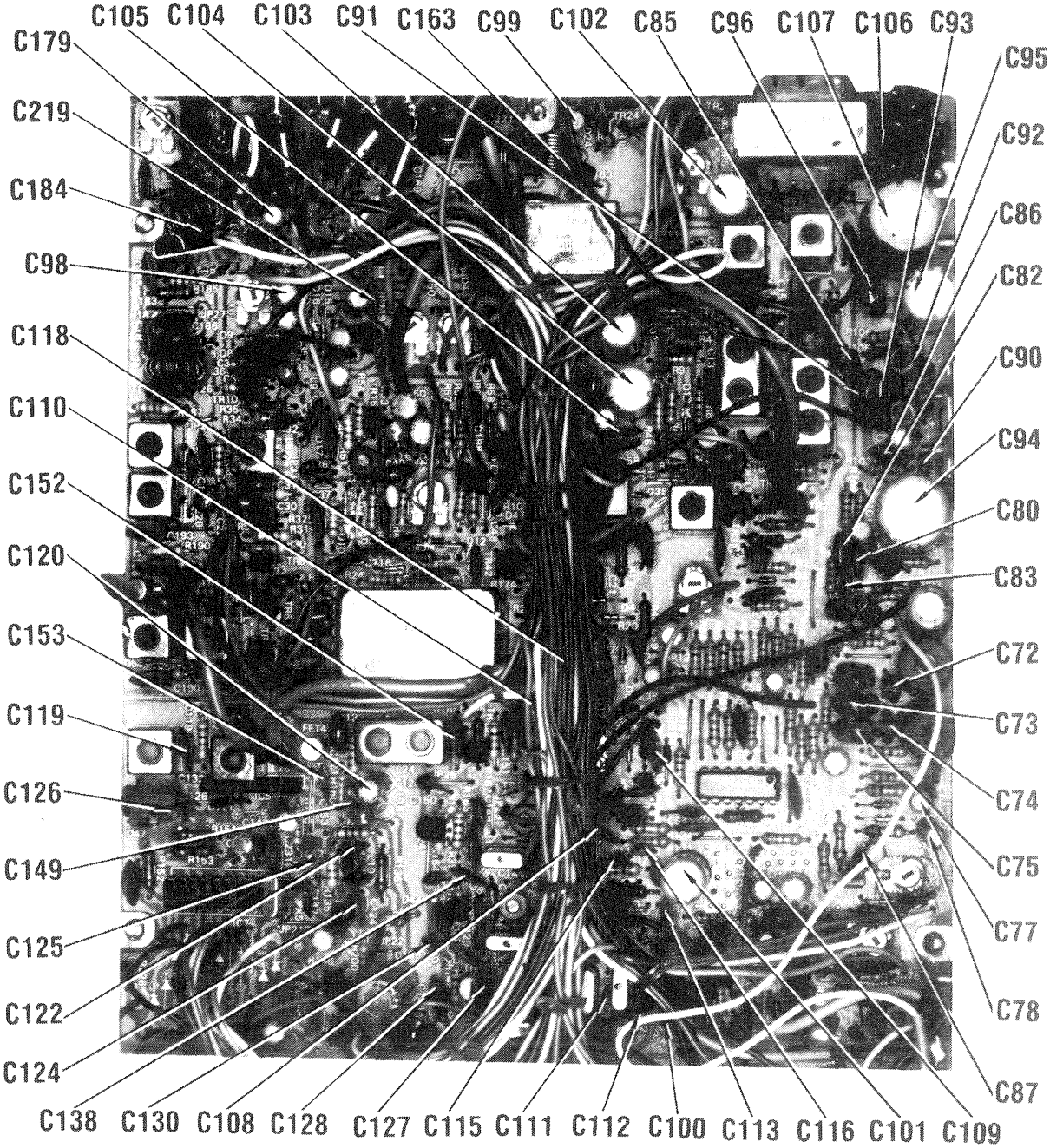
C105
C104
C103
C91
C163
C99
C102
C85
C96
C107
C106
C93
C179
C95
C219
C92
C184
C86
C98
C82
C118
C90
C110
C94
C152
C80
C120
C83
C153
C72
C119
C73
C126
C74
C149
C75
C125
C77
C122
C78
C124
C87
C138
C130
C108
C128
C127
C115
C111
C112
C100
C113
C116
C101
C109

MAIN BOARD

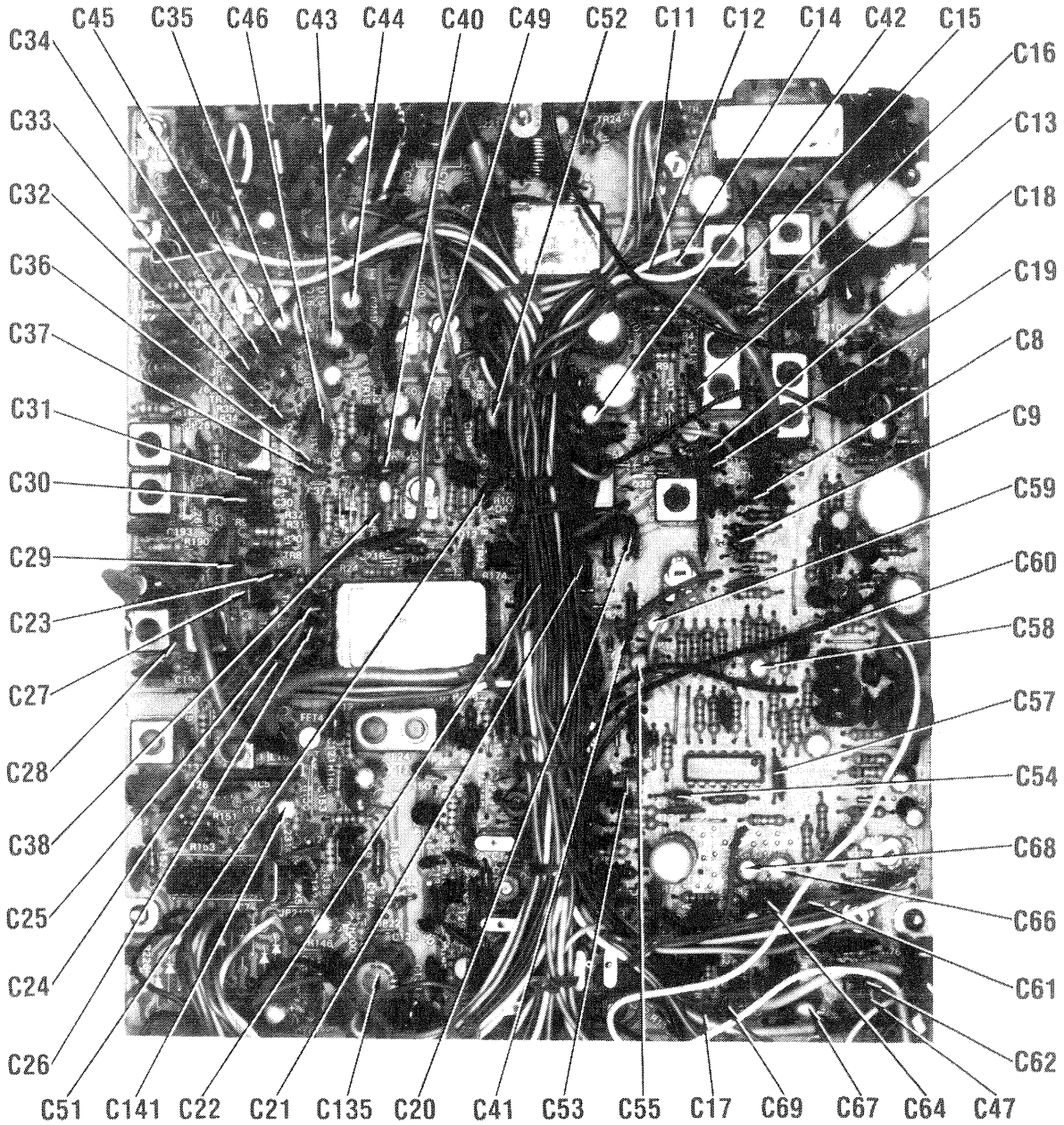
C45
C35
C46
C43
C44
C40
C49
C52
C11
C12
C14
C42
C15
C34
C16
C33
C13
C32
C18
C36
C19
C37
C8
C31
C9
C30
C59
C29
C60
C23
C58
C27
C57
C28
C54
C38
C68
C25
C66
C24
C61
C26
C62
C51
C141
C22
C21
C135
C20
C41
C53
C55
C17
C69
C67
C64
C47

MAIN BOARD

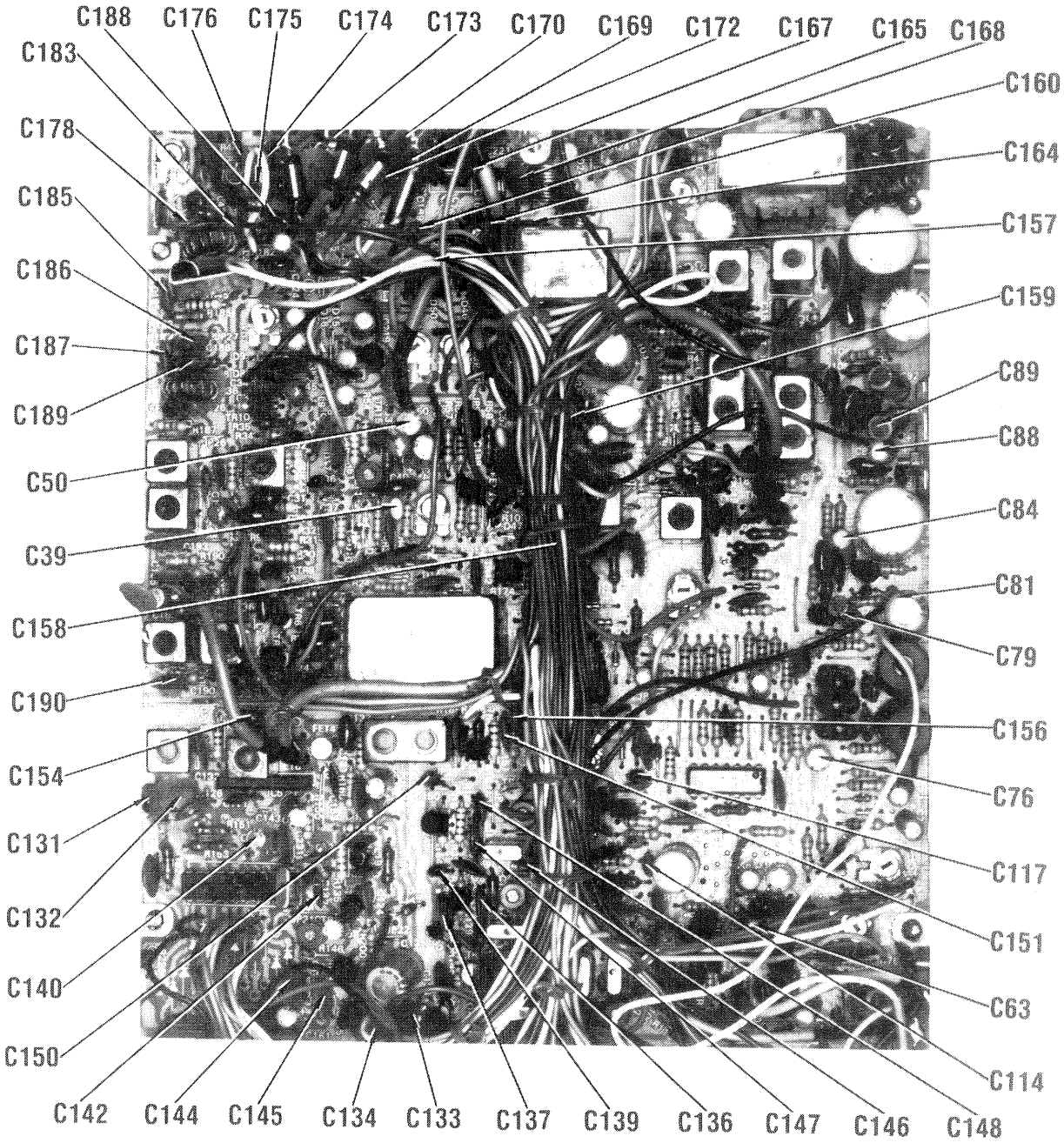
C188
C176
C175
C174
C173
C170
C169
C172
C167
C165
C168
C183
C160
C178
C164
C185
C157
C186
C159
C187
C89
C189
C88
C50
C84
C39
C81
C158
C79
C190
C156
C154
C76
C131
C117
C132
C151
C140
C63
C150
C114
C142
C144
C145
C134
C133
C137
C139
C136
C147
C146
C148

MAIN BOARD

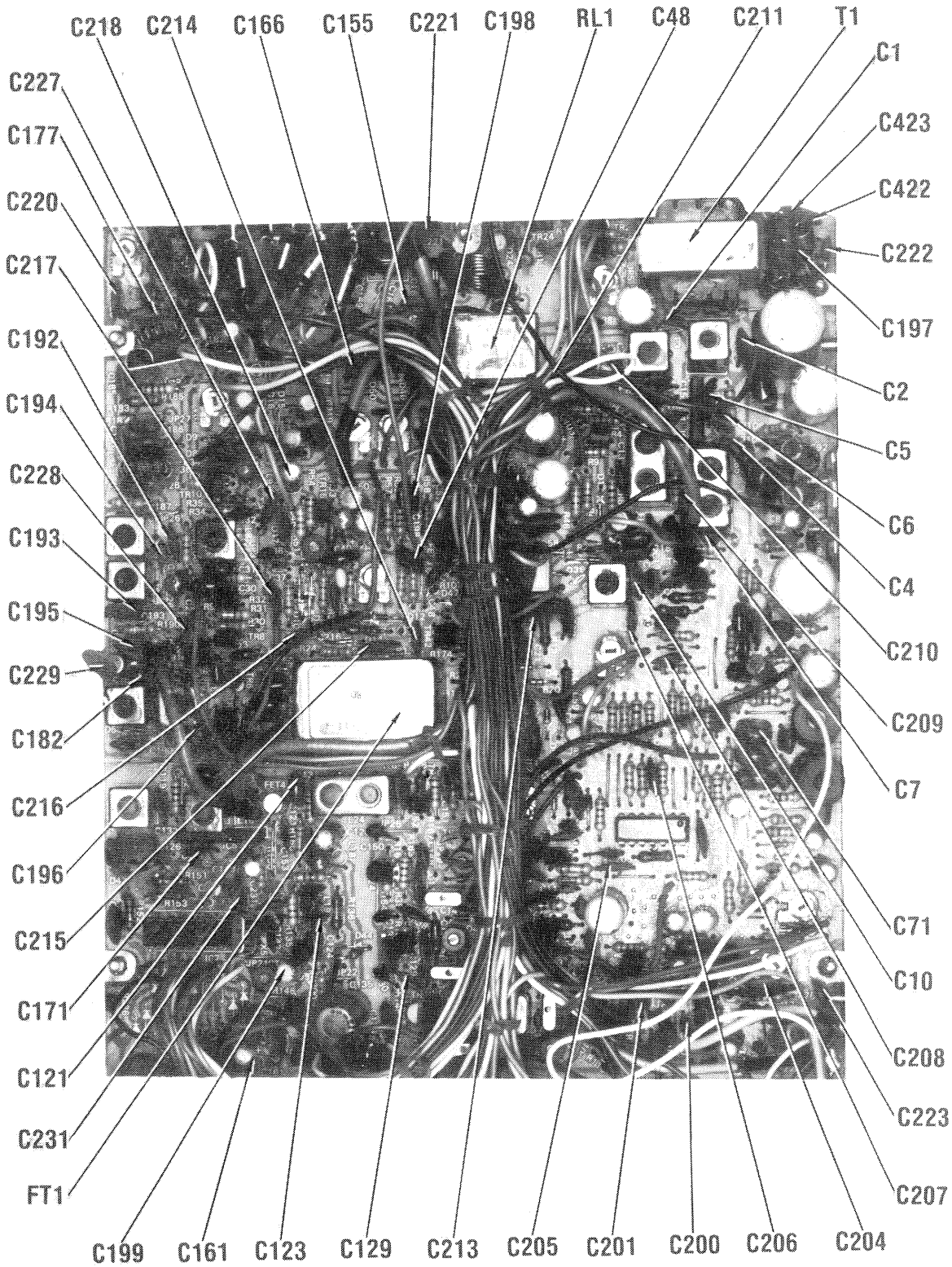
C218
C214
C166
C155
C221
C198
RL1
C48
C211
T1
C1
C423
C422
C222
C197
C2
C5
C6
C4
C210
C209
C7
C71
C10
C208
C223
C207
C204
C206
C200
C201
C205
C213
C129
C123
C161
C199
FT1
C231
C121
C171
C215
C196
C216
C182
C229
C195
C193
C228
C194
C192
C217
C220
C177
C227

MAIN BOARD

A Howard W. Sams CIRCUITRACE® Photo

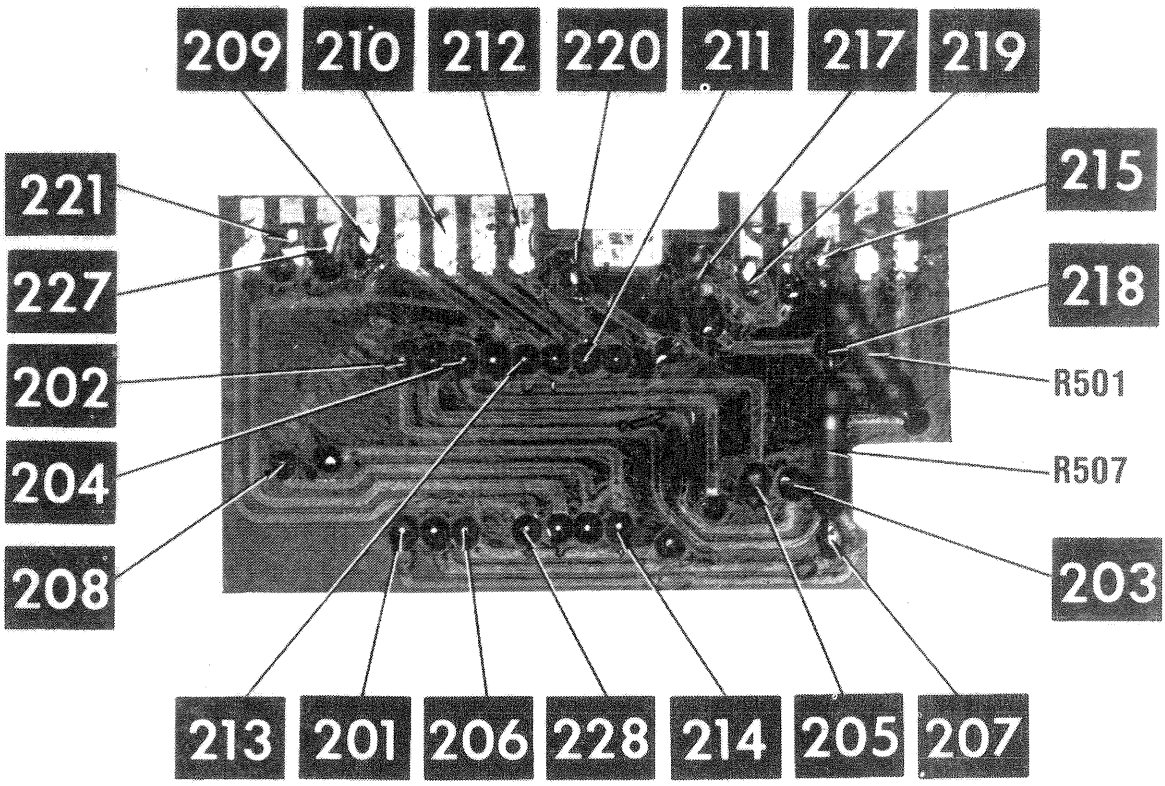

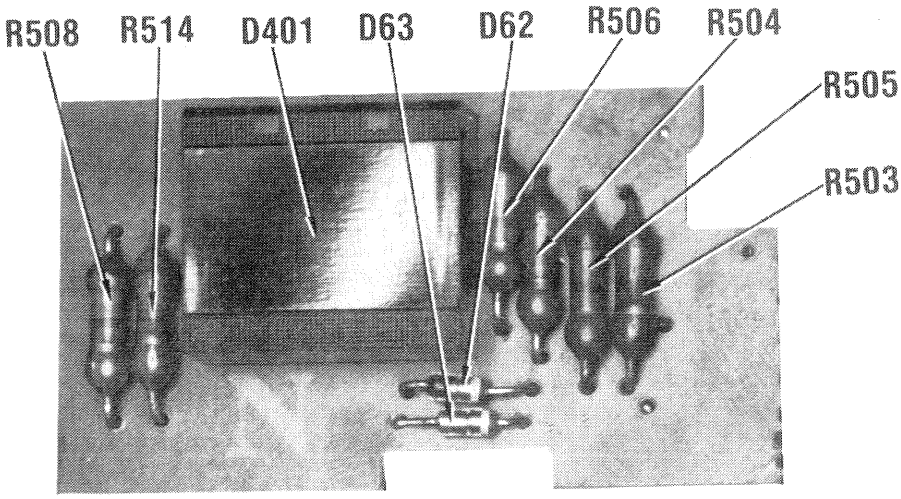

CHANNEL INDICATOR BOARD

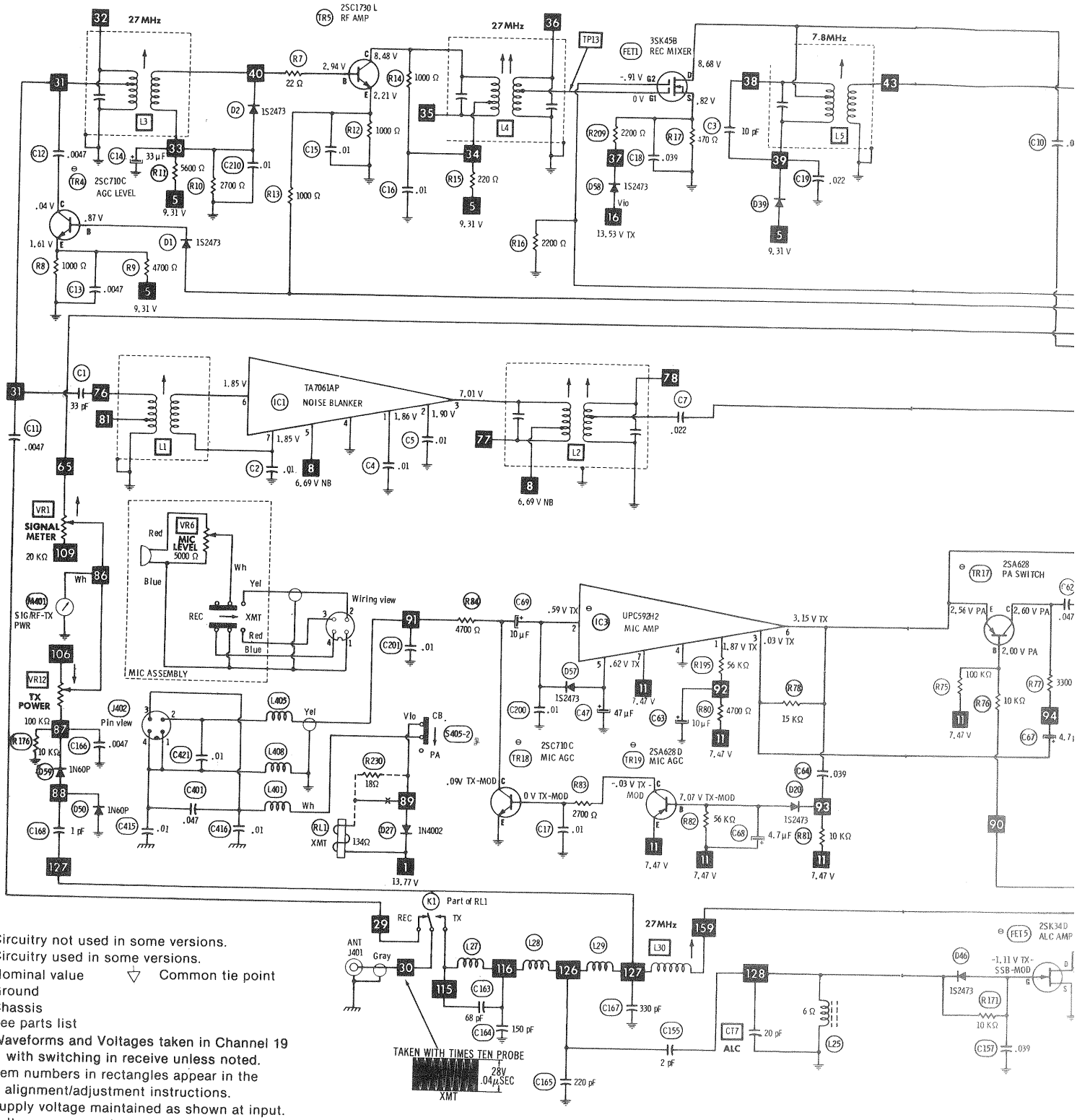

- Circuitry not used in some versions.
- Circuitry used in some versions.
- Nominal value
- Common tie point
- Ground
- Chassis
- See parts list

Waveforms and Voltages taken in Channel 19 with switching in receive unless noted.
Item numbers in rectangles appear in the alignment/adjustment instructions.
Supply voltage maintained as shown at input.
Voltages measured with digital meter, no signal.
Controls adjusted for normal operation.
Terminal identification may not be found on unit.
Resistors are 1/2W or less, 5% unless noted.
Value in ( ) used in some versions.
Arrow head(s) at coils and transformers indicates accessibility of tuning slug(s).

A PHOTOFACT STANDARD NOTATION SCHEMATIC
WITH CIRCUITRACE®

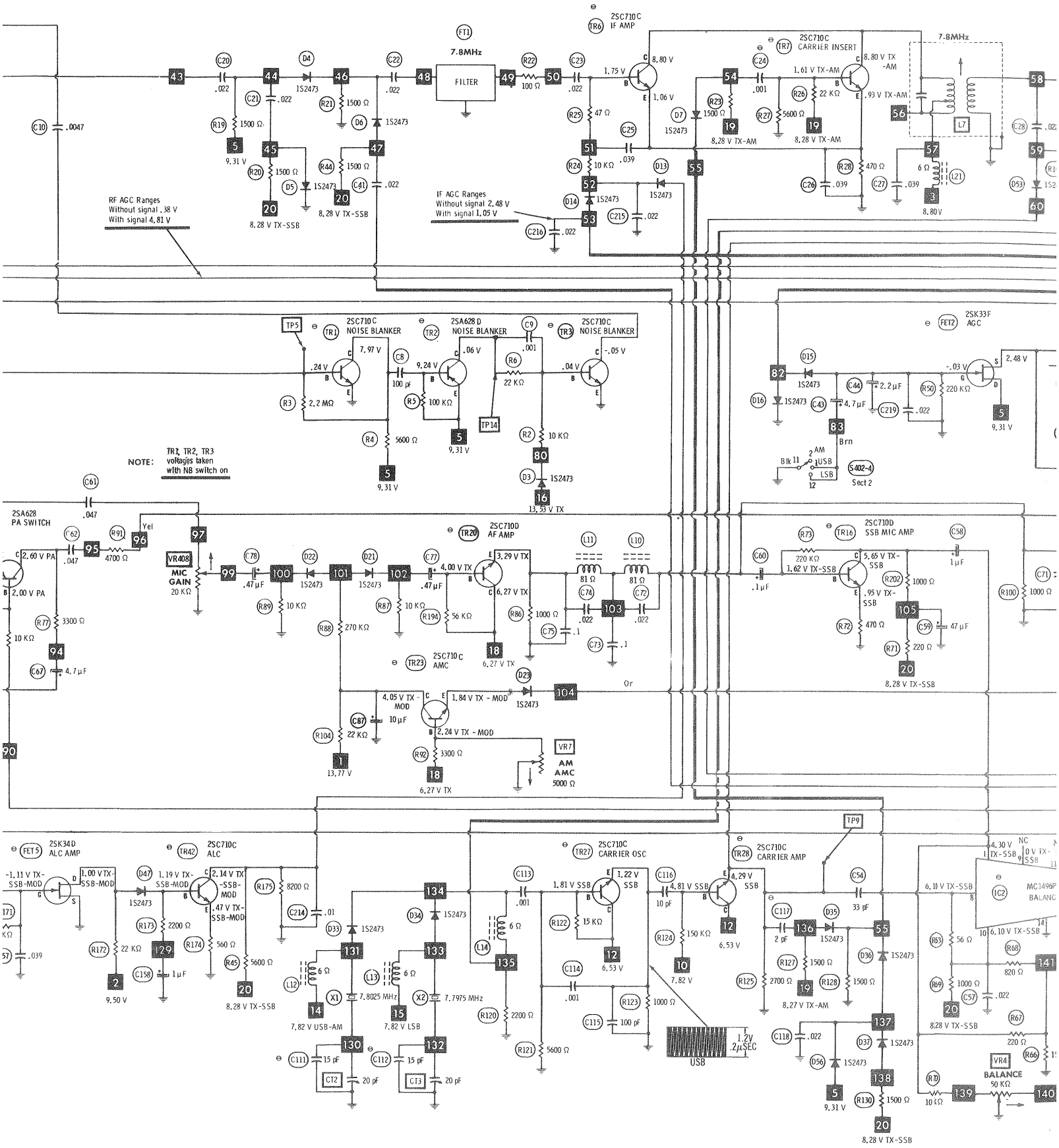

MAIN SCHEMATIC

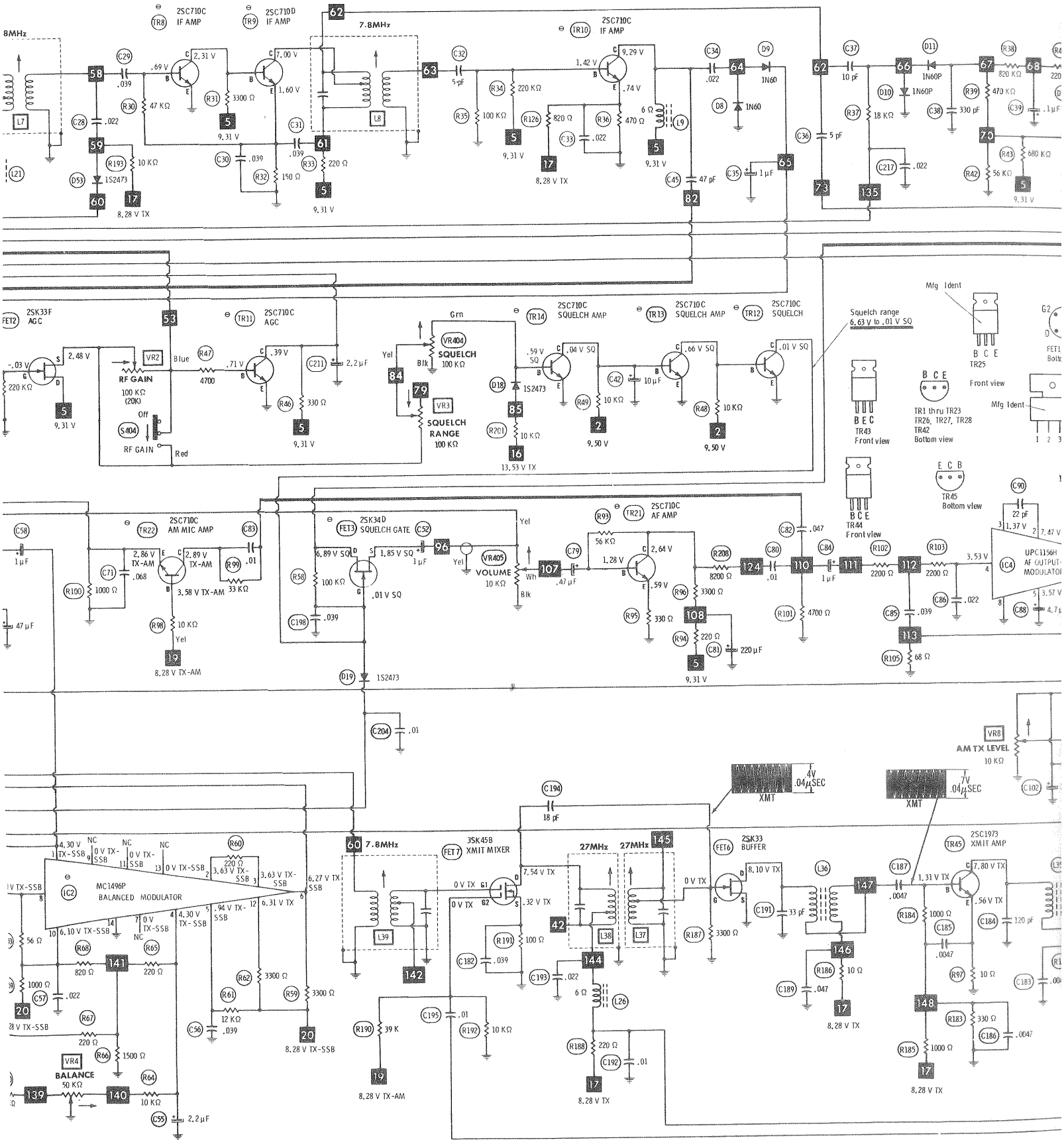
2SC710C IF AMP
2SC710D IF AMP
7.8MHz
2SC710C IF AMP
2SC33F AGC
2SC710C AGC
RF GAIN
100 KΩ (20K)
RF GAIN
SQUELCH
100 KΩ
SQUELCH RANGE
100 KΩ
2SC710C SQUELCH AMP
2SC710C SQUELCH AMP
2SC710C SQUELCH
Squelch range 6.63 V to .01 V SQ
Mfg Ident
TR25
TR43 Front view
TR1 thru TR23 TR26, TR27, TR28 TR42 Bottom view
TR45 Bottom view
TR44 Front view
2SC710C AM MIC AMP
2SK34D SQUELCH GATE
VOLUME
10 KΩ
2SC710C AF AMP
UPC1156H AF OUTPUT-MODULATOR
AM TX LEVEL
10 KΩ
XMT
MC1496P BALANCED MODULATOR
BALANCE
50 KΩ
7.8MHz
3SK45B XMIT MIXER
27MHz
27MHz
2SK33 BUFFER
2SC1973 XMIT AMP

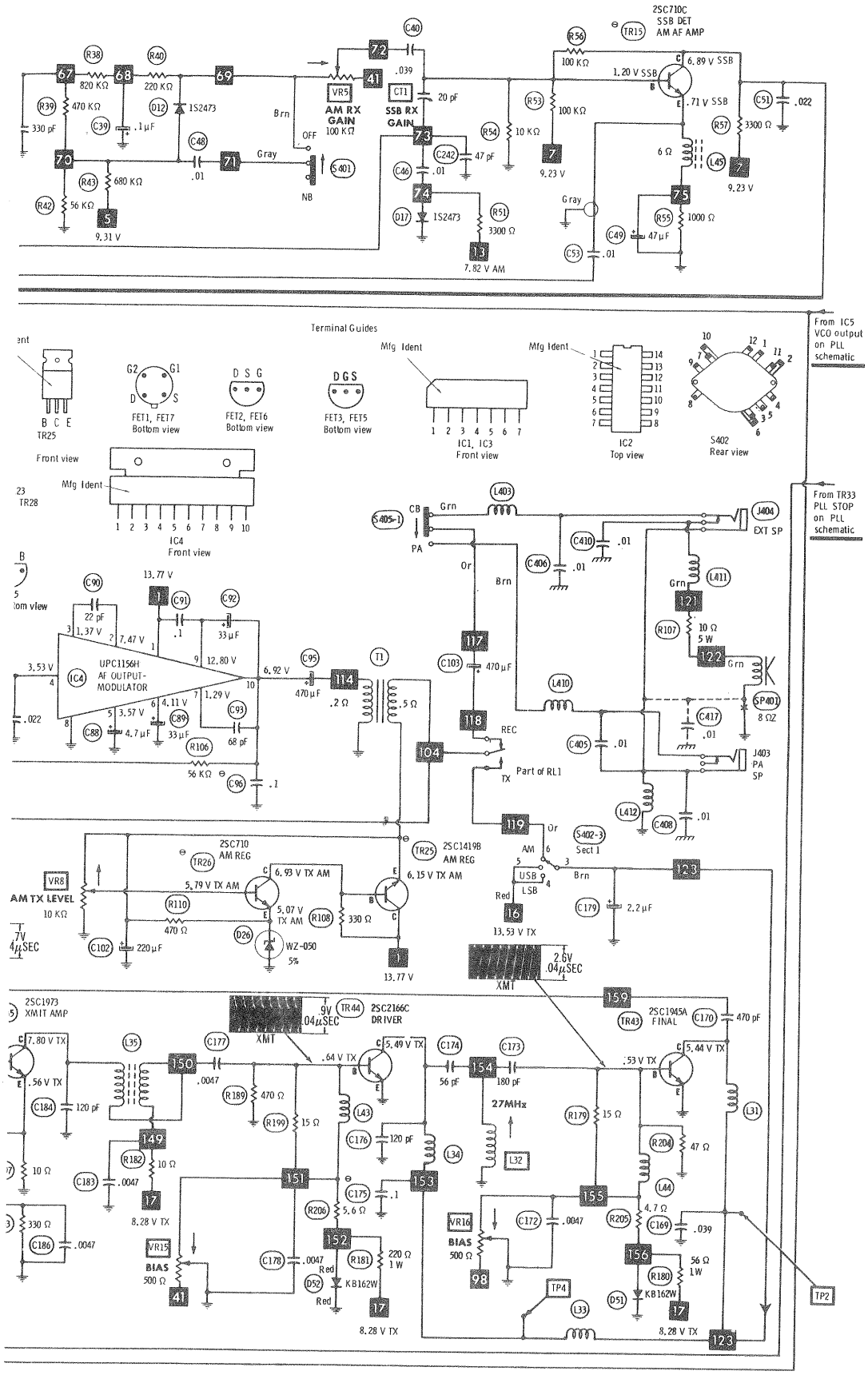
2SC710C
SSB DET
AM AF AMP
AM RX GAIN
100 KΩ
SSB RX GAIN
NB
OFF
Gray
Brn
9.31 V
9.23 V
7.82 V AM
1.20 V SSB
6.89 V SSB
.71 V SSB
Terminal Guides
Mfg Ident
FET1, FET7
Bottom view
FET2, FET6
Bottom view
FET3, FET5
Bottom view
IC1, IC3
Front view
IC2
Top view
S402
Rear view
From IC5
VCO output
on PLL
schematic
TR25
Front view
IC4
Front view
From TR33
PLL STOP
on PLL
schematic
EXT SP
UPC1156H
AF OUTPUT-
MODULATOR
13.77 V
6.92 V
REC
TX
Part of RL1
8 Ω
PA
SP
2SC710
AM REG
2SC1419B
AM REG
AM TX LEVEL
10 KΩ
6.93 V TX AM
5.79 V TX AM
5.07 V
TX AM
6.15 V TX AM
WZ-050
5%
13.53 V TX
XMT
2SC1973
XMIT AMP
2SC2166C
DRIVER
2SC1945A
FINAL
27MHz
8.28 V TX
BIAS
500 Ω
TP4
TP2

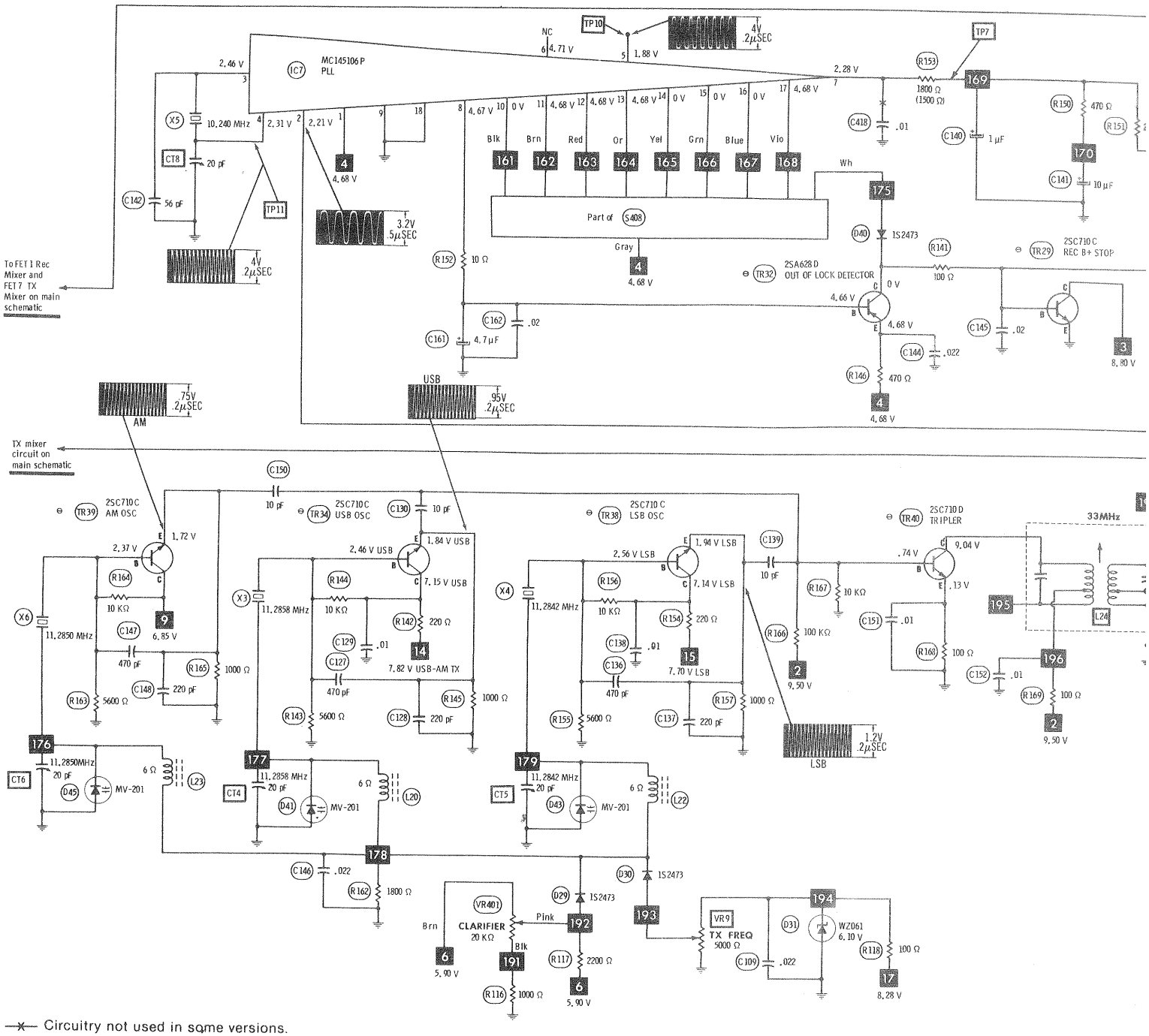

Circuitry not used in some versions.
Circuitry used in some versions.
Nominal value
Common tie point
Ground
Chassis
See parts list
Waveforms and Voltages taken in Channel 19 with switching in receive unless noted.
Item numbers in rectangles appear in the alignment/adjustment instructions.
Supply voltage maintained as shown at input.
Voltages measured with digital meter, no signal.
Controls adjusted for normal operation.
Terminal identification may not be found on unit.
Resistors are 1/2W or less, 5% unless noted.
Value in ( ) used in some versions.
Arrow head(s) at coils and transformers indicates accessibility of tuning slug(s).

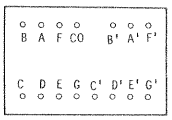

D401
Rear view

Terminal Guides

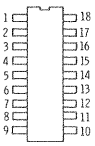

IC7
Top view

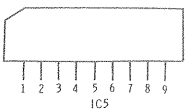

IC5
Front view

FET4
Bottom view

TR29, TR30
TR32 thru TR34
TR38 thru TR40

A PHOTOFACT STANDARD NOTATION SCHEMATIC WITH CIRCUITRACE®

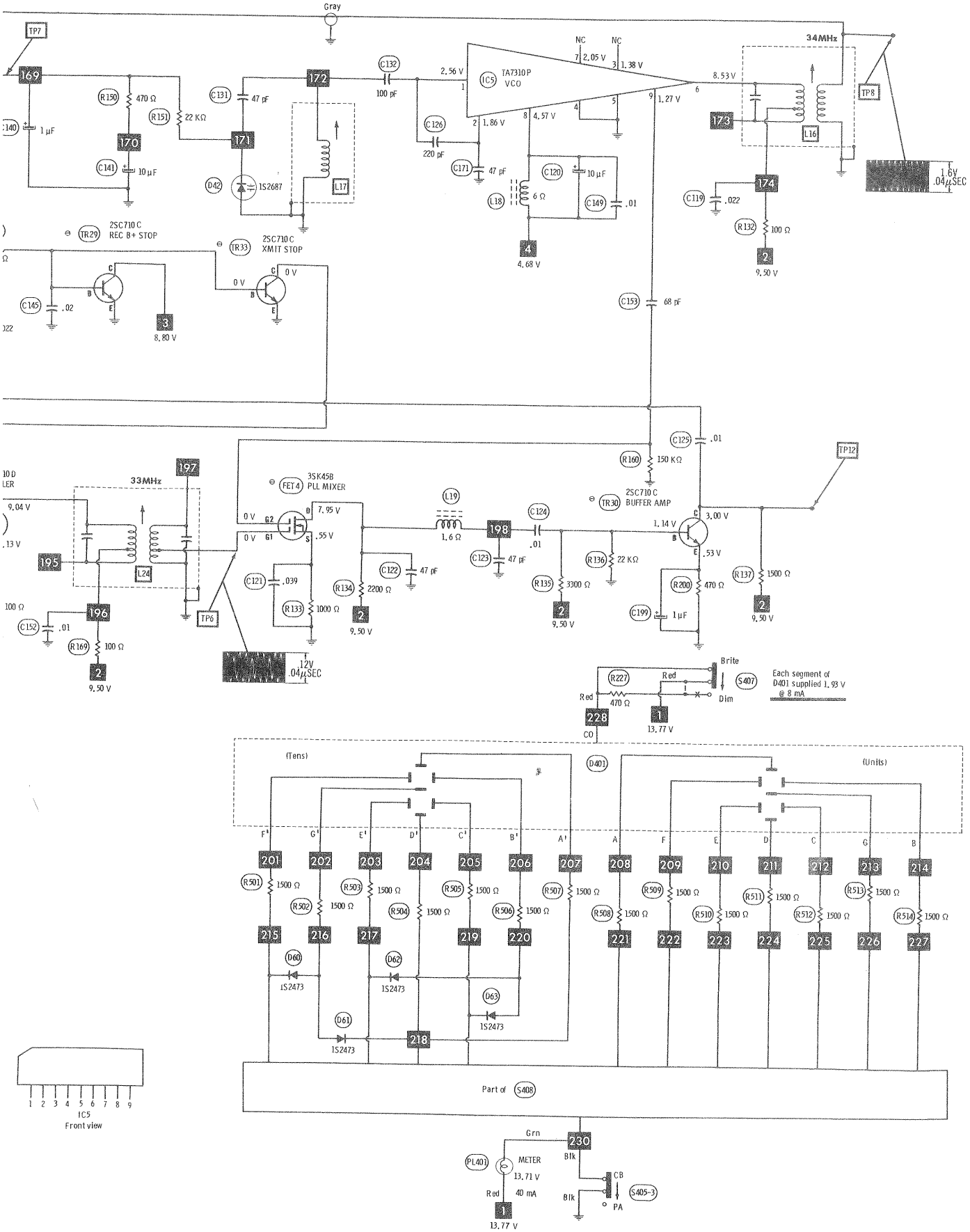

PLL SCHEMATIC

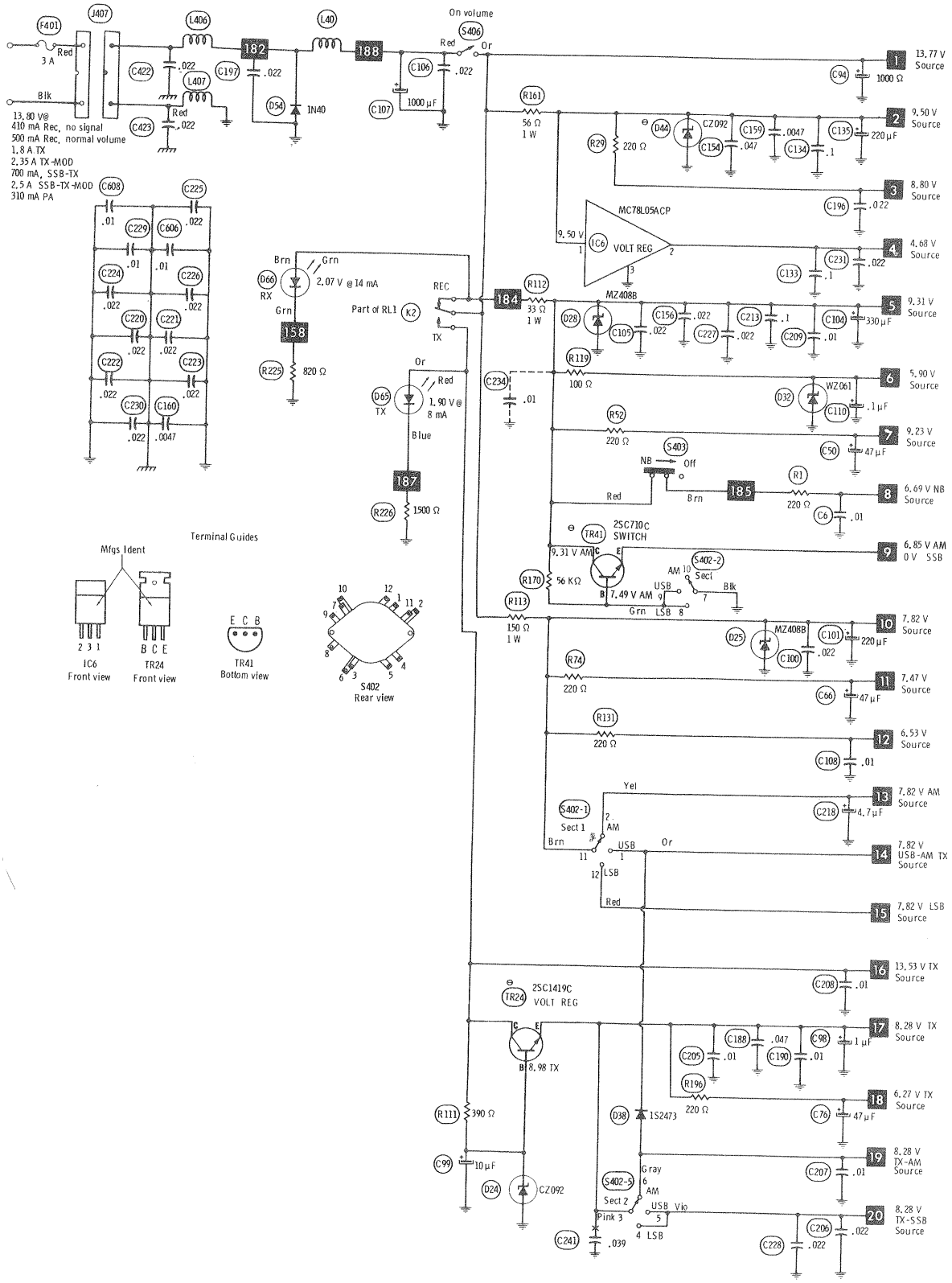

POWER SUPPLY SCHEMATIC

A Howard W. Sams CIRCUITRACE® Photo

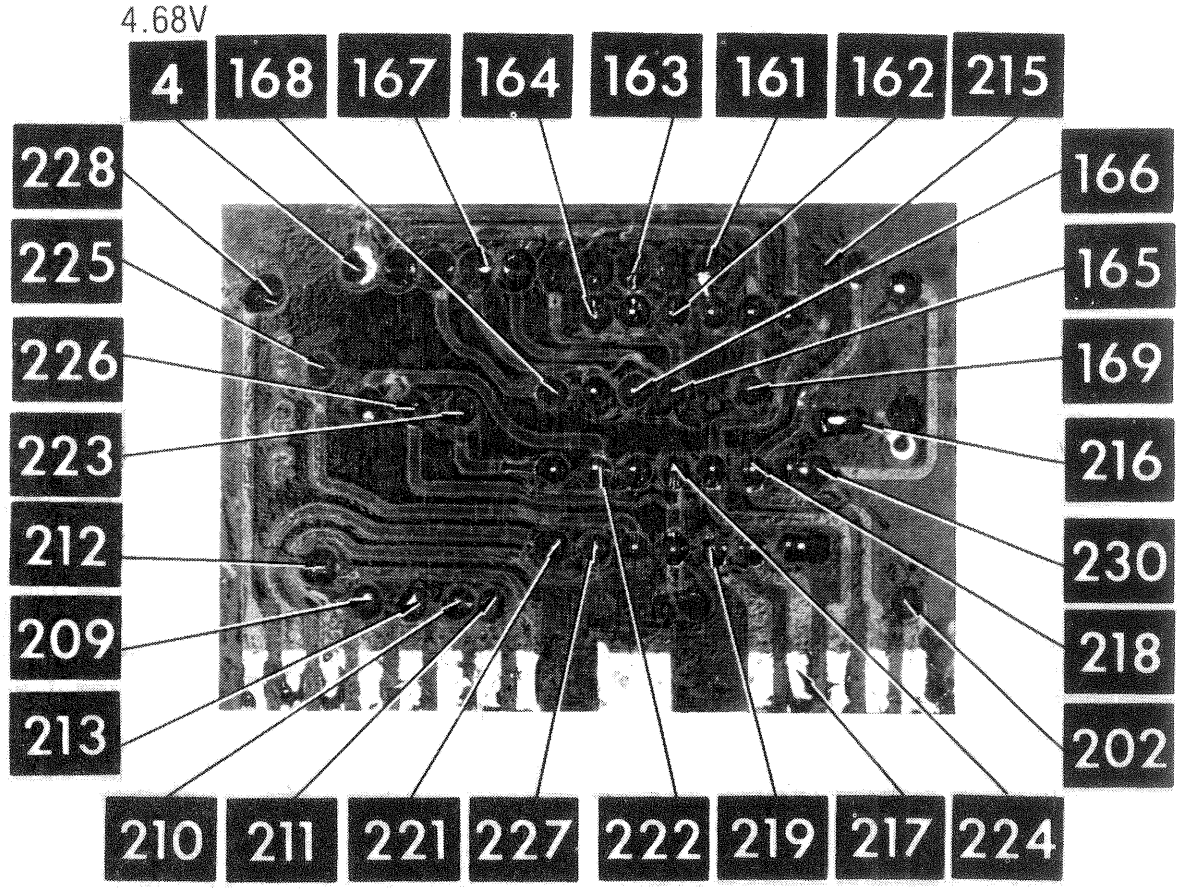

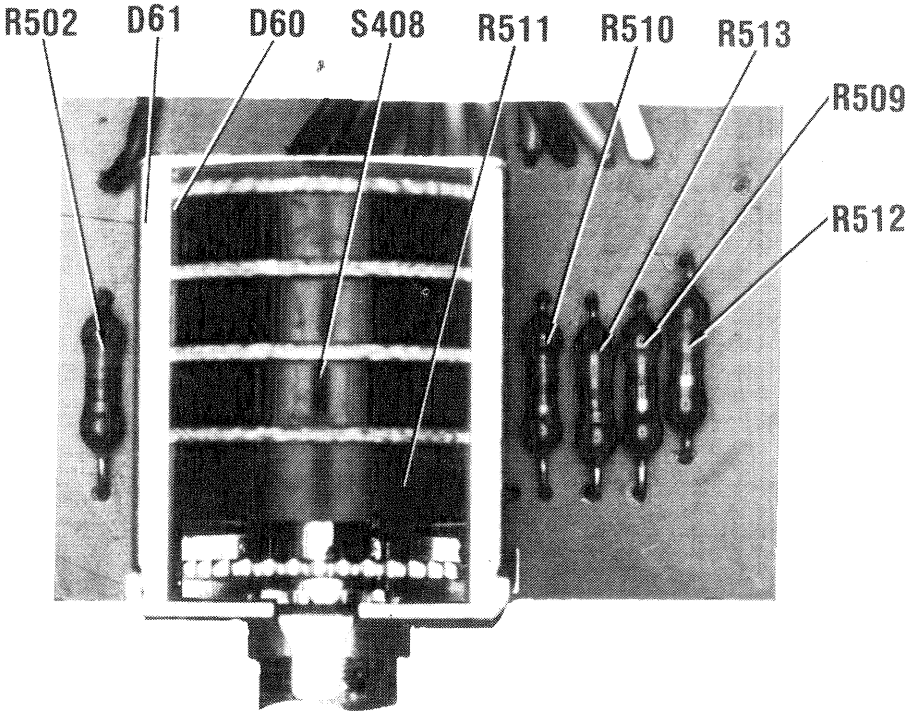

CHANNEL SELECTOR BOARD

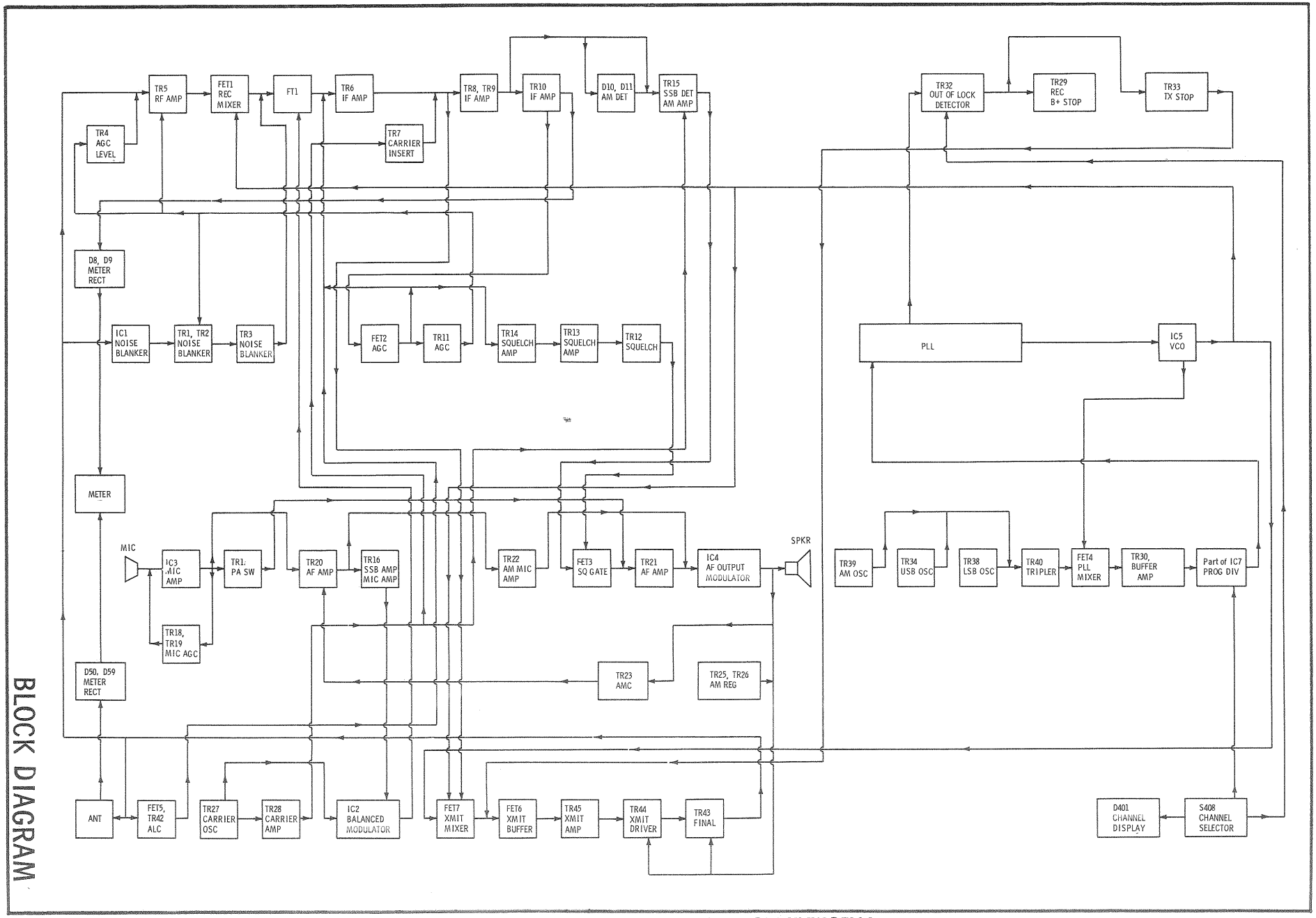

BLOCK DIAGRAM

PARTS LIST AND DESCRIPTION

(When ordering parts, state Model, Part Number, and Description.)

WIRING DATA

Cable (Speaker)(Unshielded).....	Use BELDEN No. 8782 (AWG24)(4 colors)
Shielding Strap.....	Use BELDEN No. 8660 (3/16" width)
Hook-up Wire (General Use).....	Use BELDEN No. 8524 (AWG22)(13 colors)
Hook-up Wire (Shielded).....	Use BELDEN No. 8401 (Braided Shield)(1 conductor)(AWG25)
	Use BELDEN No. 8421 (Spiral Shield)(1 conductor)(AWG25)
	Use BELDEN No. 8737 (Spiral Shield)(2 conductor)(AWG22)
Coax (Transmission Line).....	Use BELDEN No. 8216 (RG-174/U, 50 ohms)
Microphone Cable (Coiled).....	Use BELDEN No. 8497 (3 conductor-1 shielded)(6 ft.)(AWG22)
Microphone Cable (Coiled).....	Use BELDEN No. 9466 (3 conductor-1 shielded)(6 ft.)(AWG28)
Microphone Cable (Coiled).....	Use BELDEN No. 9468 (3 conductor-1 shielded)(6 ft.)(AWG31)

SEMICONDUCTORS (Select replacement transistor for best results)

ITEM No.	TYPE No.	MFGR. PART No.	REPLACEMENT DATA							
			GENERAL ELECTRIC PART No.	MALLORY PART No.	RAYTHEON PART No.	RCA PART No.	SYLVANIA PART No.	THORDARSON PART No.	WORKMAN PART No.	ZENITH PART No.
D1	1S2473		GE-514	PTC214	REN 177	SK3100/519	ECG519	TM519	WEP925/519	103-131
D2	1S2473		GE-514	PTC214	REN 177	SK3100/519	ECG519	TM519	WEP925/519	103-131
D3	1S2473		GE-514	PTC214	REN 177	SK3100/519	ECG519	TM519	WEP925/519	103-131
D4	1S2473		GE-514	PTC214	REN 177	SK3100/519	ECG519	TM519	WEP925/519	103-131
D5	1S2473		GE-514	PTC214	REN 177	SK3100/519	ECG519	TM519	WEP925/519	103-131
D6	1S2473		GE-514	PTC214	REN 177	SK3100/519	ECG519	TM519	WEP925/519	103-131
D7	1S2473		GE-514	PTC214	REN 177	SK3100/519	ECG519	TM519	WEP925/519	103-131
D8	1N60		1N60	PTC206	REN 109	SK3088	ECG109	TM109/**	WEP134/109	103-Z9001
D9	1N60		1N60	PTC206	REN 109	SK3088	ECG109	TM109/**	WEP134/109	103-Z9001
D10	1N60		1N60	PTC206	REN 109	SK3088	ECG109	TM109/**	WEP134/109	103-Z9001
	1N60P		1N60	PTC206	REN 109	SK3088	ECG109	TM109/**	WEP134/109	103-Z9001
D11	1N60		1N60	PTC206	REN 109	SK3088	ECG109	TM109/**	WEP134/109	103-Z9001
D12	1S2473		GE-514	PTC214	REN 177	SK3100/519	ECG519	TM519	WEP925/519	103-131
D13	1S2473		GE-514	PTC214	REN 177	SK3100/519	ECG519	TM519	WEP925/519	103-131
D14	1S2473		GE-514	PTC214	REN 177	SK3100/519	ECG519	TM519	WEP925/519	103-131
D15	1S2473		GE-514	PTC214	REN 177	SK3100/519	ECG519	TM519	WEP925/519	103-131
D16	1S2473		GE-514	PTC214	REN 177	SK3100/519	ECG519	TM519	WEP925/519	103-131
D17	1S2473		GE-514	PTC214	REN 177	SK3100/519	ECG519	TM519	WEP925/519	103-131
D18	1S2473		GE-514	PTC214	REN 177	SK3100/519	ECG519	TM519	WEP925/519	103-131
D19	1S2473		GE-514	PTC214	REN 177	SK3100/519	ECG519	TM519	WEP925/519	103-131
D20	1S2473		GE-514	PTC214	REN 177	SK3100/519	ECG519	TM519	WEP925/519	103-131
D21	1S2473		GE-514	PTC214	REN 177	SK3100/519	ECG519	TM519	WEP925/519	103-131
D22	1S2473		GE-514	PTC214	REN 177	SK3100/519	ECG519	TM519	WEP925/519	103-131
D23	1S2473		GE-514	PTC214	REN 177	SK3100/519	ECG519	TM519	WEP925/519	103-131
D24	CZ092		GEZD-9.1	ZB9.1A	REN 139	SK3060/139A	ECG139A	TM139/**	WEP1109/139	103-272
	MZ409B		GEZD-9.1	ZB9.1B	REN 139	SK3060/139A	ECG139A	TM139A/**	WEP1109/139A	103-272
D25	MZ408B		GEZD-8.2	ZB8.2B	REN 5072	SK3136/5072A	ECG5072A	TM5072A/**	WEP1108/5072A	103-Z9021
	MZ408A		GEZD-8.2	ZB8.2B	REN 5072	SK3136/5072A	ECG5072A	TM5072A/**	WEP1108/5072A	103-Z9021
D26	WZ-050			ZM5.1B		SK3776/5010A	ECG5010A	TM5010	WEP1411/5010	103-279-10
D27	1N4002		GE-504A	1N4002	REN 116	SK3312	ECG116	TM116	WEP156	212-76-02
	10D1		GE-504A	PTC201	REN 116	SK3311	ECG116	TM116	WEP156	212-76-02
D28	MZ409		GEZD-9.1	ZB9.1B	REN 139	SK3060/139A	ECG139A	TM139A/**	WEP1109/139A	103-272
	MZ409B		GEZD-9.1	ZB9.1B	REN 139	SK3060/139A	ECG139A	TM139A/**	WEP1109/139A	103-272
D29	1S2473		GE-514	PTC214	REN 177	SK3100/519	ECG519	TM519	WEP925/519	103-131
D30	1S2473		GE-514	PTC214	REN 177	SK3100/519	ECG519	TM519	WEP925/519	103-131
D31	WZ061		GEZD-6.2	ZB6.2B	REN 137	SK3058/137A	ECG137A	TM137A/**	WEP1154/137A	103-Z9008
	MZ306B			ZM6B		SK3778/5012A	ECG5012A	TM5012	WEP1413/5012	
D32	WZ061		GEZD-6.2	ZB6.2B	REN 137	SK3058/137A	ECG137A	TM137A/**	WEP1154/137A	103-Z9008
	MZ306B			ZM6B		SK3778/5012A	ECG5012A	TM5012	WEP1413/5012	
D33	1S2473		GE-514	PTC214	REN 177	SK3100/519	ECG519	TM519	WEP925/519	103-131
D34	1S2473		GE-514	PTC214	REN 177	SK3100/519	ECG519	TM519	WEP925/519	103-131
D35	1S2473		GE-514	PTC214	REN 177	SK3100/519	ECG519	TM519	WEP925/519	103-131
D36	1S2473		GE-514	PTC214	REN 177	SK3100/519	ECG519	TM519	WEP925/519	103-131
D37	1S2473		GE-514	PTC214	REN 177	SK3100/519	ECG519	TM519	WEP925/519	103-131
D38	1S2473		GE-514	PTC214	REN 177	SK3100/519	ECG519	TM519	WEP925/519	103-131
D39	1S2473		GE-514	PTC214	REN 177	SK3100/519	ECG519	TM519	WEP925/519	103-131
D40	1S2473		GE-514	PTC214	REN 177	SK3100/519	ECG519	TM519	WEP925/519	103-131
D41	MV201			PTC311			ECG611	TM611		103-146
D42	1S2687				REN 612	SK3325/612	ECG612	TM612		103-176
	MV201			PTC311			ECG611	TM611		103-146
D43	MV201			PTC311			ECG611	TM611		103-146
D44	CZ092		GEZD-9.1	ZB9.1A	REN 139	SK3060/139A	ECG139A	TM139/**	WEP1109/139	103-272
	MZ409B		GEZD-9.1	ZB9.1B	REN 139	SK3060/139A	ECG139A	TM139A/**	WEP1109/139A	103-272
D45	MV201			PTC311			ECG611	TM611		103-146
D46	1S2473		GE-514	PTC214	REN 177	SK3100/519	ECG519	TM519	WEP925/519	103-131
D47	1S2473		GE-514	PTC214	REN 177	SK3100/519	ECG519	TM519	WEP925/519	103-131
D50	1N60		1N60	PTC206	REN 109	SK3088	ECG109	TM109/**	WEP134/109	103-Z9001
D51	KB162			PTC301	REN 601	SK3463/601	ECG601	TM601		
	KB162W			PTC301	REN 601	SK3463/601	ECG601	TM601		
D52	KB162			PTC301	REN 601	SK3463/601	ECG601	TM601		
	KB162W			PTC301	REN 601	SK3463/601	ECG601	TM601		
D53	1S2473		GE-514	PTC214	REN 177	SK3100/519	ECG519	TM519	WEP925/519	103-131
D54	1N4002		GE-504A	1N4002	REN 116	SK3312	ECG116	TM116	WEP156	212-76-02
	10D1		GE-504A	PTC201	REN 116	SK3311	ECG116	TM116	WEP156	212-76-02
D56	1S2473		GE-514	PTC214	REN 177	SK3100/519	ECG519	TM519	WEP925/519	103-131
D57	1S2473		GE-514	PTC214	REN 177	SK3100/519	ECG519	TM519	WEP925/519	103-131
D58	1S2473		GE-514	PTC214	REN 177	SK3100/519	ECG519	TM519	WEP925/519	103-131
D59	1N60		1N60	PTC206	REN 109	SK3088	ECG109	TM109/**	WEP134/109	103-Z9001
D60	1S2473		GE-514	PTC214	REN 177	SK3100/519	ECG519	TM519	WEP925/519	103-131

PARTS LIST AND DESCRIPTION (CONTINUED)

(When ordering parts, state Model, Part Number, and Description.)

SEMICONDUCTORS (Select replacement transistor for best results) (cont)

ITEM No.	TYPE No.	MFGR. PART No.	REPLACEMENT DATA							
			GENERAL ELECTRIC PART No.	MALLORY PART No.	RAYTHEON PART No.	RCA PART No.	SYLVANIA PART No.	THORDARSON PART No.	WORKMAN PART No.	ZENITH PART No.
D61	1S2473		GE-514	PTC214	REN 177	SK3100/519	ECG519	TM519	WEP925/519	103-131
D62	1S2473		GE-514	PTC214	REN 177	SK3100/519	ECG519	TM519	WEP925/519	103-131
D63	1S2473		GE-514	PTC214	REN 177	SK3100/519	ECG519	TM519	WEP925/519	103-131
FET1	3SK45B		GE-FET-4	PTC182*	REN 222	SK3065/222	ECG222	TM222	WEP905/222	121-826
	3SK45		GE-FET-4	PTC182*	REN 222	SK3065/222	ECG222	TM222	WEP905/222	121-826
FET2	2SK33F		GE-FET-2	PTC161	REN 132*	SK3834/132	ECG312*	TM312*	WEP920/312*	921-1067*
	2SK33		GE-FET-2	PTC161	REN 132*	SK3834/132	ECG312*	TM312*	WEP920/312*	921-1067*
	JF1033		GE-FET-2*	PTC161*	REN 132*	SK3448	ECG312*	TM312	WEP920/312	921-1067*
FET3	2SK34D		GE-FET-2*	PTC161*	REN 132*	SK3448	ECG312*	TM312*	WEP920/312*	921-1067*
	2SK34P		GE-FET-2*	PTC161*	REN 132*	SK3448	ECG312*	TM312*	WEP920/312*	921-1067*
	2SK34		GE-FET-2*	PTC161*	REN 132*	SK3448	ECG312*	TM312*	WEP920/312*	921-1067*
	2SK68		GE-FET-1	PTC151*	REN 133*	SK3448	ECG459*	TM459*	WEP801/133*	921-1019*
FET4	3SK45B		GE-FET-4	PTC182*	REN 222	SK3065/222	ECG222	TM222	WEP905/222	121-826
	3SK45		GE-FET-4	PTC182*	REN 222	SK3065/222	ECG222	TM222	WEP905/222	121-826
	3SK44		GE-FET-4	PTC182*	REN 222	SK3065/222	ECG222	TM222	WEP905/222	121-826
FET5	2SK34D		GE-FET-2*	PTC161*	REN 132*	SK3448	ECG312*	TM312*	WEP920/312*	921-1067*
	2SK34P		GE-FET-2*	PTC161*	REN 132*	SK3448	ECG312*	TM312*	WEP920/312*	921-1067*
	2SK34		GE-FET-2*	PTC161*	REN 132*	SK3448	ECG312*	TM312*	WEP920/312*	921-1067*
	2SK68		GE-FET-1	PTC151*	REN 133*	SK3448	ECG459*	TM459*	WEP801/133*	921-1019*
FET6	2SK33F		GE-FET-2	PTC161	REN 132*	SK3834/132	ECG312*	TM312*	WEP920/312*	921-1067*
	2SK33		GE-FET-2	PTC161	REN 132*	SK3834/132	ECG312*	TM312*	WEP920/312*	921-1067*
FET7	3SK45B		GE-FET-4	PTC182*	REN 222	SK3065/222	ECG222	TM222	WEP905/222	121-826
	3SK45		GE-FET-4	PTC182*	REN 222	SK3065/222	ECG222	TM222	WEP905/222	121-826
IC1	TA7061AP		GEIC-92	PTC781	REN 1100	SK3223/1100	ECG1100	TM1100	WEP941/1100	221-Z9023
	UPC7061AP		GEIC-92	PTC781	REN 1100	SK3223/1100	ECG1100	TM1100	WEP941/1100	221-Z9023
IC2	MC1496P						ECG973D	TM973D		
	MC1496A						ECG973D	TM973D		
IC3	UPC592H2					SK3469/1195	ECG1195	TM1195		905-137
	UPC592HZ					SK3469/1195	ECG1195	TM1195		905-137
IC4	UPC1156H					SK3484/1194	ECG1194	TM1194	WEP2126/1194	221-Z9063
IC5	TA7310P				REN 1192	SK3445/1192	ECG1192	TM1192	WEP2120/1192	221-Z9061
	TA7310				REN 1192	SK3445/1192	ECG1192	TM1192	WEP2120/1192	221-Z9061
IC6	MC78L05ACP		GEVR-100		REN 977	SK3462/977	ECG977	TM977		221-Z9044
	78L05		GEVR-100		REN 977	SK3462/977	ECG977	TM977		221-Z9044
IC7	MC145106P									
	MC145106									
TR1	2SC710C		GE-211*	PTC132*	REN 123AP*	SK3356	ECG107*	TM107*/**	WEP710	121-Z9000A*
	2SC710		GE-211*	PTC132*	REN 123AP*	SK3356	ECG107*	TM107*/**	WEP710	121-Z9000A*
	2SC945		GE-212	PTC121*	REN 199	SK3124/289	ECG199	TM199/**	WEP1945	121-972*
TR2	2SA628D		GE-82*	PTC103*	REN 159*	SK3114/290	ECG159*	TM159*/**	WEP62/159	121-Z9003*
	2SA628		GE-82*	PTC103*	REN 159*	SK3114/290	ECG159*	TM159*/**	WEP62/159	121-Z9003*
TR3	2SC710C		GE-211*	PTC132*	REN 123AP*	SK3356	ECG107*	TM107*/**	WEP710	121-Z9000A*
	2SC710		GE-211*	PTC132*	REN 123AP*	SK3356	ECG107*	TM107*/**	WEP710	121-Z9000A*
	2SC945		GE-212	PTC121*	REN 199	SK3124/289	ECG199	TM199/**	WEP1945	121-972*
TR4	2SC710C		GE-211*	PTC132*	REN 123AP*	SK3356	ECG107*	TM107*/**	WEP710	121-Z9000A*
	2SC710		GE-211*	PTC132*	REN 123AP*	SK3356	ECG107*	TM107*/**	WEP710	121-Z9000A*
	2SC945		GE-212	PTC121*	REN 199	SK3124/289	ECG199	TM199/**	WEP1945	121-972*
TR5	2SC1730L		GE-17*	PTC136*	REN 107	SK3293/107	ECG316*	TM316*	WEP535/107	121-Z9093
	2SC1730		GE-17*	PTC136*	REN 107	SK3293/107	ECG316*	TM316*	WEP535/107	121-Z9093
TR6	2SC710C		GE-211*	PTC132*	REN 123AP*	SK3356	ECG107*	TM107*/**	WEP710	121-Z9000A*
	2SC710		GE-211*	PTC132*	REN 123AP*	SK3356	ECG107*	TM107*/**	WEP710	121-Z9000A*
	2SC839		GE-61*	PTC132*	REN 123A*	SK3124/289	ECG293	TM293/**	WEP1945	121-Z9000A*
TR7	2SC710C		GE-211*	PTC132*	REN 123AP*	SK3356	ECG107*	TM107*/**	WEP710	121-Z9000A*
	2SC710		GE-211*	PTC132*	REN 123AP*	SK3356	ECG107*	TM107*/**	WEP710	121-Z9000A*
	2SC839		GE-61*	PTC132*	REN 123A*	SK3124/289	ECG293	TM293/**	WEP1945	121-Z9000A*
TR8	2SC710C		GE-211*	PTC132*	REN 123AP*	SK3356	ECG107*	TM107*/**	WEP710	121-Z9000A*
	2SC710		GE-211*	PTC132*	REN 123AP*	SK3356	ECG107*	TM107*/**	WEP710	121-Z9000A*
	2SC839		GE-61*	PTC132*	REN 123A*	SK3124/289	ECG293	TM293/**	WEP1945	121-Z9000A*
TR9	2SC710D		GE-211*	PTC132*	REN 123AP*	SK3356	ECG107*	TM107*/**	WEP710	121-Z9000A*
	2SC710		GE-211*	PTC132*	REN 123AP*	SK3356	ECG107*	TM107*/**	WEP710	121-Z9000A*
	2SC839		GE-61*	PTC132*	REN 123A*	SK3124/289	ECG293	TM293/**	WEP1945	121-Z9000A*
TR10	2SC710C		GE-211*	PTC132*	REN 123AP*	SK3356	ECG107*	TM107*/**	WEP710	121-Z9000A*
	2SC710		GE-211*	PTC132*	REN 123AP*	SK3356	ECG107*	TM107*/**	WEP710	121-Z9000A*
	2SC839		GE-61*	PTC132*	REN 123A*	SK3124/289	ECG293	TM293/**	WEP1945	121-Z9000A*
TR11	2SC710C		GE-211*	PTC132*	REN 123AP*	SK3356	ECG107*	TM107*/**	WEP710	121-Z9000A*
	2SC710		GE-211*	PTC132*	REN 123AP*	SK3356	ECG107*	TM107*/**	WEP710	121-Z9000A*
	2SC945		GE-212	PTC121*	REN 199	SK3124/289	ECG199	TM199/**	WEP1945	121-972*
TR12	2SC710C		GE-211*	PTC132*	REN 123AP*	SK3356	ECG107*	TM107*/**	WEP710	121-Z9000A*
	2SC710		GE-211*	PTC132*	REN 123AP*	SK3356	ECG107*	TM107*/**	WEP710	121-Z9000A*
	2SC945		GE-212	PTC121*	REN 199	SK3124/289	ECG199	TM199/**	WEP1945	121-972*
TR13	2SC710C		GE-211*	PTC132*	REN 123AP*	SK3356	ECG107*	TM107*/**	WEP710	121-Z9000A*
	2SC710		GE-211*	PTC132*	REN 123AP*	SK3356	ECG107*	TM107*/**	WEP710	121-Z9000A*
	2SC945		GE-212	PTC121*	REN 199	SK3124/289	ECG199	TM199/**	WEP1945	121-972*
TR14	2SC710C		GE-211*	PTC132*	REN 123AP*	SK3356	ECG107*	TM107*/**	WEP710	121-Z9000A*
	2SC710		GE-211*	PTC132*	REN 123AP*	SK3356	ECG107*	TM107*/**	WEP710	121-Z9000A*
	2SC945		GE-212	PTC121*	REN 199	SK3124/289	ECG199	TM199/**	WEP1945	121-972*
TR15	2SC710E		GE-211*	PTC132*	REN 123AP*	SK3356	ECG107*	TM107*/**	WEP710	121-Z9000A*
	2SC710		GE-211*	PTC132*	REN 123AP*	SK3356	ECG107*	TM107*/**	WEP710	121-Z9000A*
	2SC945		GE-212	PTC121*	REN 199	SK3124/289	ECG199	TM199/**	WEP1945	121-972*
TR16	2SC710D		GE-211*	PTC132*	REN 123AP*	SK3356	ECG107*	TM107*/**	WEP710	121-Z9000A*
	2SC710		GE-211*	PTC132*	REN 123AP*	SK3356	ECG107*	TM107*/**	WEP710	121-Z9000A*
	2SC945		GE-212	PTC121*	REN 199	SK3124/289	ECG199	TM199/**	WEP1945	121-972*
TR17	2SA628D		GE-82*	PTC103*	REN 159*	SK3114/290	ECG159*	TM159*/**	WEP62/159	121-Z9003*
	2SA628		GE-82*	PTC103*	REN 159*	SK3114/290	ECG159*	TM159*/**	WEP62/159	121-Z9003*
	2SA733		GE-48	PTC127	REN 294	SK3114/290	ECG290	TM290/**	WEP911/290	121-Z9067
TR18	2SC710C		GE-211*	PTC132*	REN 123AP*	SK3356	ECG107*	TM107*/**	WEP710	121-Z9000A*
	2SC710		GE-211*	PTC132*	REN 123AP*	SK3356	ECG107*	TM107*/**	WEP710	121-Z9000A*
	2SC945		GE-212	PTC121*	REN 199	SK3124/289	ECG199	TM199/**	WEP1945	121-972*

PARTS LIST AND DESCRIPTION (CONTINUED)

(When ordering parts, state Model, Part Number, and Description.)

SEMICONDUCTORS (Select replacement transistor for best results) (cont)

ITEM No.	TYPE No.	MFGR. PART No.	REPLACEMENT DATA							
			GENERAL ELECTRIC PART No.	MALLORY PART No.	RAYTHEON PART No.	RCA PART No.	SYLVANIA PART No.	THORDARSON PART No.	WORKMAN PART No.	ZENITH PART No.
TR19	2SA628D		GE-82*	PTC103*	REN 159*	SK3114/290	ECG159*	TM159*/**	WEP62/159	121-Z9003*
	2SA628		GE-82*	PTC103*	REN 159*	SK3114/290	ECG159*	TM159*/**	WEP62/159	121-Z9003*
	2SA733		GE-48	PTC127	REN 294	SK3114/290	ECG290	TM290/**	WEP911/290	121-Z9067
TR20	2SC710D		GE-211*	PTC132*	REN 123AP*	SK3356	ECG107*	TM107*/**	WEP710	121-Z9000A*
	2SC710		GE-211*	PTC132*	REN 123AP*	SK3356	ECG107*	TM107*/**	WEP710	121-Z9000A*
	2SC945		GE-212	PTC121*	REN 199	SK3124/289	ECG199	TM199/**	WEP1945	121-972*
TR21	2SC710C		GE-211*	PTC132*	REN 123AP*	SK3356	ECG107*	TM107*/**	WEP710	121-Z9000A*
	2SC710		GE-211*	PTC132*	REN 123AP*	SK3356	ECG107*	TM107*/**	WEP710	121-Z9000A*
	2SC945		GE-212	PTC121*	REN 199	SK3124/289	ECG199	TM199/**	WEP1945	121-972*
TR22	2SC710C		GE-211*	PTC132*	REN 123AP*	SK3356	ECG107*	TM107*/**	WEP710	121-Z9000A*
	2SC710		GE-211*	PTC132*	REN 123AP*	SK3356	ECG107*	TM107*/**	WEP710	121-Z9000A*
	2SC945		GE-212	PTC121*	REN 199	SK3124/289	ECG199	TM199/**	WEP1945	121-972*
TR23	2SC710C		GE-211*	PTC132*	REN 123AP*	SK3356	ECG107*	TM107*/**	WEP710	121-Z9000A*
	2SC710		GE-211*	PTC132*	REN 123AP*	SK3356	ECG107*	TM107*/**	WEP710	121-Z9000A*
	2SC945		GE-212	PTC121*	REN 199	SK3124/289	ECG199	TM199/**	WEP1945	121-972*
TR24	2SC1419C		GE-66	PTC167	REN 152	SK3197/235	ECG152	TM152	WEP745/152	121-987-03
	2SC1419		GE-66	PTC167	REN 152	SK3197/235	ECG152	TM152	WEP745/152	121-987-03
	2SD712		GE-66	PTC167	REN 152	SK3197/235	ECG152	TM152	WEP745/152	121-987-03
TR25	2SC1419C		GE-66	PTC167	REN 152	SK3197/235	ECG152	TM152	WEP745/152	121-987-03
	2SC1419		GE-66	PTC167	REN 152	SK3197/235	ECG152	TM152	WEP745/152	121-987-03
	2SD712		GE-66	PTC167	REN 152	SK3197/235	ECG152	TM152	WEP745/152	121-987-03
TR26	2SC710C		GE-211*	PTC132*	REN 123AP*	SK3356	ECG107*	TM107*/**	WEP710	121-Z9000A*
	2SC710		GE-211*	PTC132*	REN 123AP*	SK3356	ECG107*	TM107*/**	WEP710	121-Z9000A*
	2SC945		GE-212	PTC121*	REN 199	SK3124/289	ECG199	TM199/**	WEP1945	121-972*
TR27	2SC710C		GE-211*	PTC132*	REN 123AP*	SK3356	ECG107*	TM107*/**	WEP710	121-Z9000A*
	2SC710		GE-211*	PTC132*	REN 123AP*	SK3356	ECG107*	TM107*/**	WEP710	121-Z9000A*
	2SC1675		GE-213	PTC132*	REN 229*	SK3122	ECG229*	TM229*	WEP773	121-Z9021*
TR28	2SC710C		GE-211*	PTC132*	REN 123AP*	SK3356	ECG107*	TM107*/**	WEP710	121-Z9000A*
	2SC710		GE-211*	PTC132*	REN 123AP*	SK3356	ECG107*	TM107*/**	WEP710	121-Z9000A*
	2SC1675		GE-213	PTC132*	REN 229*	SK3122	ECG229*	TM229*	WEP773	121-Z9021*
TR29	2SC710C		GE-211*	PTC132*	REN 123AP*	SK3356	ECG107*	TM107*/**	WEP710	121-Z9000A*
	2SC710		GE-211*	PTC132*	REN 123AP*	SK3356	ECG107*	TM107*/**	WEP710	121-Z9000A*
	2SC945		GE-212	PTC121*	REN 199	SK3124/289	ECG199	TM199/**	WEP1945	121-972*
TR30	2SC710C		GE-211*	PTC132*	REN 123AP*	SK3356	ECG107*	TM107*/**	WEP710	121-Z9000A*
	2SC710		GE-211*	PTC132*	REN 123AP*	SK3356	ECG107*	TM107*/**	WEP710	121-Z9000A*
	2SC1675		GE-213	PTC132*	REN 229*	SK3122	ECG229*	TM229*	WEP773	121-Z9021*
TR32	2SA628D		GE-82*	PTC103*	REN 159*	SK3114/290	ECG159*	TM159*/**	WEP62/159	121-Z9003*
	2SA628		GE-82*	PTC103*	REN 159*	SK3114/290	ECG159*	TM159*/**	WEP62/159	121-Z9003*
	2SA733		GE-48	PTC127	REN 294	SK3114/290	ECG290	TM290/**	WEP911/290	121-Z9067
TR33	2SC710C		GE-211*	PTC132*	REN 123AP*	SK3356	ECG107*	TM107*/**	WEP710	121-Z9000A*
	2SC710		GE-211*	PTC132*	REN 123AP*	SK3356	ECG107*	TM107*/**	WEP710	121-Z9000A*
	2SC839		GE-61*	PTC132*	REN 123A*	SK3124/289	ECG293	TM293/**	WEP1945	121-Z9000A*
TR34	2SC710C		GE-211*	PTC132*	REN 123AP*	SK3356	ECG107*	TM107*/**	WEP710	121-Z9000A*
	2SC710		GE-211*	PTC132*	REN 123AP*	SK3356	ECG107*	TM107*/**	WEP710	121-Z9000A*
	2SC839		GE-61*	PTC132*	REN 123A*	SK3124/289	ECG293	TM293/**	WEP1945	121-Z9000A*
TR38	2SC710C		GE-211*	PTC132*	REN 123AP*	SK3356	ECG107*	TM107*/**	WEP710	121-Z9000A*
	2SC710		GE-211*	PTC132*	REN 123AP*	SK3356	ECG107*	TM107*/**	WEP710	121-Z9000A*
	2SC839		GE-61*	PTC132*	REN 123A*	SK3124/289	ECG293	TM293/**	WEP1945	121-Z9000A*
TR39	2SC710C		GE-211*	PTC132*	REN 123AP*	SK3356	ECG107*	TM107*/**	WEP710	121-Z9000A*
	2SC710		GE-211*	PTC132*	REN 123AP*	SK3356	ECG107*	TM107*/**	WEP710	121-Z9000A*
	2SC839		GE-61*	PTC132*	REN 123A*	SK3124/289	ECG293	TM293/**	WEP1945	121-Z9000A*
TR40	2SC710D		GE-211*	PTC132*	REN 123AP*	SK3356	ECG107*	TM107*/**	WEP710	121-Z9000A*
	2SC710		GE-211*	PTC132*	REN 123AP*	SK3356	ECG107*	TM107*/**	WEP710	121-Z9000A*
	2SC1675		GE-213	PTC132*	REN 229*	SK3122	ECG229*	TM229*	WEP773	121-Z9021*
TR41	2SC710C		GE-211*	PTC132*	REN 123AP*	SK3356	ECG107*	TM107*/**	WEP710	121-Z9000A*
	2SC710		GE-211*	PTC132*	REN 123AP*	SK3356	ECG107*	TM107*/**	WEP710	121-Z9000A*
	2SC945		GE-212	PTC121*	REN 199	SK3124/289	ECG199	TM199/**	WEP1945	121-972*
TR42	2SC710C		GE-211*	PTC132*	REN 123AP*	SK3356	ECG107*	TM107*/**	WEP710	121-Z9000A*
	2SC710		GE-211*	PTC132*	REN 123AP*	SK3356	ECG107*	TM107*/**	WEP710	121-Z9000A*
	2SC945		GE-212	PTC121*	REN 199	SK3124/289	ECG199	TM199/**	WEP1945	121-972*
TR43	2SC1945A									
TR44	2SC2166C		GE-215	PTC186	REN 235	SK3197/235	ECG235	TM235	WEP785/235	121-Z9039
TR45	2SC1973		GE-285*	PTC143*	REN 293	SK3849/293	ECG293	TM293	WEP912/293	121-Z9066

* Lead configuration may vary from original.
/** Also available as exact type replacement.

PARTS LIST AND DESCRIPTION (CONTINUED)

(When ordering parts, state Model, Part Number, and Description.)

ELECTROLYTIC CAPACITORS

ITEM No.	RATING	REPLACEMENT DATA				
		MFGR. PART No.	CORNELL-DUBILIER PART No.	MALLORY PART No.	SPRAGUE PART No.	
					Q-LINE	GENERAL LINE
C14	33 16V		PC30-25	VTT33D25	QV1-63	EV-1325
C35	1 50V		PC1-50	VTT1A50	QV1-11	EV-1615
C39	.1 16V			TDC104M050EL	ODT1-2	SD50-R109
C42	10 16V		PC10-25	VTT10B25	QV1-41	EV-1222
C43	4.7 16V		PC5-50	VTT4R7B50	QV1-31	EV-1619.1
C44	2.2 25V		PC2-100	VTT2R2A50	QV1-21	EV-1617.1
C47	47 10V		PC50-16	VTT47D16	QV1-73	EV-1226
C49	47 10V		PC50-16	VTT47D16	QV1-73	EV-1226
C50	47 10V		PC50-16	VTT47D16	QV1-73	EV-1226
C52	.1 16V			TDC104M050EL	ODT1-2	SD50-R109
C55	2.2 25V		PC2-100	VTT2R2A50	QV1-21	EV-1617.1
C58	1 50V		PC1-50	VTT1A50	QV1-11	EV-1615
C59	47 10V		PC50-16	VTT47D16	QV1-73	EV-1226
C60	.1 16V			TDC104M050EL	QDT1-2	SD50-R109
C63	10 10V		PC10-25	VTT10B25	QV1-41	EV-1222
C66	47 10V		PC50-16	VTT47D16	QV1-73	EV-1226
C67	4.7 16V		PC5-50	VTT4R7B50	QV1-31	EV-1619.1
C68	4.7 16V		PC5-50	VTT4R7B50	QV1-31	EV-1619.1
C69	10 16V		PC10-25	VTT10B25	OV1-41	EV-1222
C76	47 10V		PC50-16	VTT47D16	QV1-73	EV-1226
C77	.47 50V		PC1-50	VTTR47A63	QV1-3	EV-1610
C78	.47 50V		PC1-50	VTTR47A63	QV1-3	EV-1610
C79	.47 50V		PC1-50	VTTR47A63	QV1-3	EV-1610
C81	220 16V		PC250-25	VTT220H16	QV1-117	EV-1240
C84	1 50V		PC1-50	VTT1A50	QV1-11	EV-1615
C87	10 16V		PC10-25	VTT10B25	QV1-41	EV-1222
C88	4.7 25V		PC5-50	VTT4R7B50	QV1-31	EV-1619.1
C89	33 16V		PC30-25	VTT33D25	QV1-63	EV-1325
C92	33 16V		PC30-25	VTT33D25	QV1-63	EV-1325
C94	1000 16V		PC1000-16	VTT1000M16	QV1-183	EV-1261
C95	470 16V		PC500-16	VTT470K16	OV1-151	EV-1251
C98	1 50V		PC1-50	VTT1A50	QV1-11	EV-1615
C99	10 16V		PC10-25	VTT10B25	QV1-41	EV-1222
C101	220 16V		PC250-25	VTT220H16	OV1-117	EV-1240
C102	220 16V		PC250-25	VTT220H16	QV1-117	EV-1240
C103	470 10V		PC500-16	VTT470K16	OV1-151	EV-1251
C104	330 10V		WRR300-35*	VTT330G10	QV1-131	EV-1145
C107	1000 16V		PC1000-16	VTT1000M16	QV1-183	EV-1261
C110	.1 16V			TDC104M050EL	QDT1-2	SD50-R109
C120	10 16V		PC10-25	VTT10B25	QV1-41	EV-1222
C135	220 16V		PC250-25	VTT220H16	QV1-117	EV-1240
C140	1 50V		PC1-50	VTT1A50	QV1-11	EV-1615
C141	10 16V		PC10-25	VTT10B25	QV1-41	EV-1222
C158	1 50V		PC1-50	VTT1A50	QV1-11	EV-1615
C161	4.7 25V		PC5-50	VTT4R7B50	QV1-31	EV-1619.1
C179	2.2 25V		PC2-100	VTT2R2A50	QV1-21	EV-1617.1
C199	1 50V		PC1-50	VTT1A50	QV1-11	EV-1615
C211	2.2 25V		PC2-100	VTT2R2A50	QV1-21	EV-1617.1
C218	4.7 25V		PC5-50	VTT4R7B50	OV1-31	EV-1619.1

* Axial replacement for radial device.

CAPACITORS

ITEM No.	RATING	MFGR. PART No.	REPLACEMENT DATA			
			CORNELL-DUBILIER PART No.	MALLORY PART No.	SPRAGUE PART No.	
					Q-LINE	GENERAL LINE
C1	33		NP033	CN0433	QCC2-22	10TCC-Q33
C2	.01 10%			MAG5011		
C3	10 NPO		NP010	CN0410	QCC2-15	10TCC-Q10
C4	.01 10%			MAG5011		
C5	.01 10%			MAG5011		
C6	.01 10%			MAG5011		
C7	.022				QC1-173	HY-725
C8	100 NPO		NP0100	CN0310		10TCC-T10
C9	.001		GP1000	GP210	QC2-81	5GA-D10
C10	.0047		GP4700	GP247		5GA-D47
C11	.0047		GP4700	GP247		5GA-D47
C12	.0047		GP4700	GP247		5GA-D47
C13	.0047		GP4700	GP247		5GA-D47
C15	.01 10%			MAG5011		
C16	.01 10%			MAG5011		
C17	.01 10%			MAG5011		
C18	.039 10%		DPMS6S39	M192P3939R8	QFT2-159	1FT-S39
C19	.022 10%		DPMS2S22	M192P2239R8	QFT2-127	1FT-S22
C20	.022				QC1-173	HY-725
C21	.022				QC1-173	HY-725
C22	.022				QC1-173	HY-725
C23	.022				QC1-173	HY-725
C24	.001		GP1000	GP210	QC2-81	5GA-D10
C25	.039 10%					
C26	.039 10%		DPMS6S39	M192P3939R8	QFT2-159	1FT-S39
C27	.039 10%		DPMS6S39	M192P3939R8	QFT2-159	1FT-S39
C28	.022				QC1-173	HY-725
C29	.039 10%		DPMS6S39	M192P3939R8	QFT2-159	1FT-S39
C30	.039 10%		DPMS6S39	M192P3939R8	QFT2-159	1FT-S39
C31	.039 10%		DPMS6S39	M192P3939R8	QFT2-159	1FT-S39
C32	5 NPO		NP04P7	CN0547		10TCC-V47
C33	.022				QC1-173	HY-725
C34	.022				QC1-173	HY-725
C36	5 NPO		NP04P7	CN0547		10TCC-V47
C37	10 NPO		NP010	CN0410	QCC2-15	10TCC-Q10

PARTS LIST AND DESCRIPTION (CONTINUED)

(When ordering parts, state Model, Part Number, and Description.)

CAPACITORS (cont)

ITEM No.	RATING	MFGR. PART No.	REPLACEMENT DATA			
			CORNELL-DUBILIER PART No.	MALLORY PART No.	SPRAGUE PART No.	
					Q-LINE	GENERAL LINE
C38	330		GP330	GP333	QCT2-33	10TS-T33
C40	.039 10%		DPMS6S39	M192P3939R8	QFT2-159	1FT-S39
C41	.022				QC1-173	HY-725
C45	47 NPO 5%		NP047	CN0447	QCC2-26	10TCC-Q47
C46	.01 10%			MAG5011		
C48	.01 10%		WMF1S1	M192P1039R8	QFT2-91	1FT-S10
C51	.022 10%		DPMS2S22	M192P2239R8	QFT2-127	1FT-S22
C53	.01			MAG5011		
C54	33 NPO 5%		NP033	CN0433	QCC2-22	10TCC-Q33
C56	.039 10%		DPMS6S39	M192P3939R8	QFT2-159	1FT-S39
C57	.022				QC1-173	HY-725
C61	.047 10%		DPMS2S47	M192P4739R8	QFT2-171	1FT-S47
C62	.047 10%		DPMS2S47	M192P4739R8	QFT2-171	1FT-S47
C64	.039 10%		DPMS6S39	M192P3939R8	QFT2-159	1FT-S39
C71	.068 10%			MAG25168		HY-740
C72	.022 10%		DPMS2S22	M192P2239R8	QFT2-127	1FT-S22
C73	.1 10%		WMF05P1	M192P1049R8	QFT2-215	1FT-P10
C74	.022 10%		DPMS2S22	M192P2239R8	QFT2-127	1FT-S22
C75	.1 10%		WMF05P1	M192P1049R8	QFT2-215	1FT-P10
C80	.01 10%		WMF1S1	M192P1039R8	QFT2-91	1FT-S10
C82	.047 10%		DPMS2S47	M192P4739R8	QFT2-171	1FT-S47
C83	.01 10%		WMF05P1	M192P1049R8	QFT2-215	1FT-P10
C85	.039 10%		DPMS6S39	M192P3939R8	QFT2-159	1FT-S39
C86	.022 10%		DPMS2S22	M192P2239R8	QFT2-127	1FT-S22
C90	20 NPO 5%		NP020	CN0420	QCC2-19	10TCC-Q20
C91	.1 10%		WMF05P1	M192P1049R8	QFT2-215	1FT-P10
C98	68 10%		NP068	CN0468		10TCC-Q68
C96	.1 10%		WMF05P1	M192P1049R8	QFT2-215	1FT-P10
C100	.022				QC1-173	HY-725
C105	.022				QC1-173	HY-725
C106	.022				QC1-173	HY-725
C108	.01 10%			MAG5011		
C109	.022			MAG16168		HY-640
C111	15 N470			*		10TCU-Q15
C112	15 N470			*		10TCU-Q15
C113	.001		GP1000	GP210	QC2-81	5GA-D10
C114	.001		GP1000	GP210	QC2-81	5GA-D10
C115	100 NPO 10%		NP0100	CN0310		10TCC-T10
C116	10 NPO		NP010	CN0410	QCC2-15	10TCC-Q10
C117	2		NP02P2	CN0522		10TCC-V22
C118	.022				QC1-173	HY-725
C119	.022				QC1-173	HY-725
C121	.039 10%		DPMS6S39	M192P3939R8	QFT2-159	1FT-S39
C122	47 NPO		NP047	CN0447	QCC2-26	10TCC-Q47
C123	47 NPO		NP047	CN0447	QCC2-26	10TCC-Q47
C124	.01 10%			MAG5011		
C125	.01 10%			MAG5011		
C126	220 NPO 10%					10TCC-T22
C127	470 NPO 10%		GP470	GP347	QCT2-35	10TS-T47
C128	220 NPO 10%					10TCC-T22
C129	.01 10%			MAG5011		
C130	10 NPO		NP010	CN0410	QCC2-15	10TCC-Q10
C131	47 NPO		NP047	CN0447	QCC2-26	10TCC-Q47
C132	47 NPO		NP047	CN0447	QCC2-26	10TCC-Q47
C133	.1 10%		WMF05P1	M192P1049R8	QFT2-215	1FT-P10
C134	.1 10%		WMF05P1	M192P1049R8	QFT2-215	1FT-P10
C136	470 NPO 10%		GP470	GP347	QCT2-35	10TS-T47
C137	220 NPO 10%					10TCC-T22
C138	.01 10%			MAG5011		
C139	10		NP010	CN0410	QCC2-15	10TCC-Q10
C142	56 NPO			CN0456		10TCC-Q56
C144	.022				QC1-173	HY-725
C145	.02			MAG5012		
C146	.022				QC1-173	HY-725
C147	470 10%		GP470	GP347	QCT2-35	10TS-T47
C148	220 10%					10TCC-T22
C149	.01			MAG5011		
C150	10 NPO		NP010	CN0410	QCC2-15	10TCC-Q10
C151	.01 10%			MAG5011		
C152	.01 10%			MAG5011		
C153	68 NPO		NP068	CN0468		10TCC-Q68
C154	.047 10%		DPMS2S47	M192P4739R8	QFT2-171	1FT-S47
C155	2 NPO		NP02P2	CN0522		10TCC-V22
C156	.022				QC1-173	HY-725
C157	.039 10%		DPMS6S39	M192P3939R8	QFT2-159	1FT-S39
C159	.0047		GP4700	GP247		5GA-D47
C160	.0047		GP4700	GP247		5GA-D47
C162	.02			MAG5012		
C163	68 NPO		NP068	CN0468		10TCC-Q68
C164	150 NPO 10%			CN0315		10TCC-T15
C165	220 NPO 10%					10TCC-T22
C166	.0047		GP4700	GP247		5GA-D47
C167	330 NPO 10%		GP330	GP333	QCT2-33	10TS-T33
C168	1 NPO			CN0510		10TCC-V10
C169	.039 10%		DPMS6S39	M192P3939R8	QFT2-159	1FT-S39
C170	470 NPO 10%		GP470	GP347	QCT2-35	10TS-T47
C171	47 NPO		NP047	CN0447	QCC2-26	10TCC-Q47
C172	.0047		GP4700	GP247		5GA-D47
C173	180 N220 5%			GP318	QCT2-27	10TS-T18
C174	56 NPO 10%			CN0456		10TCC-Q56
C175	.1 10%		WMF05P1	M192P1049R8	QFT2-215	1FT-P10
C176	120			CN0312		10TCC-T12
C177	.0047		GP4700	GP247		5GA-D47
C178	.0047		GP4700	GP247		5GA-D47

PARTS LIST AND DESCRIPTION (CONTINUED)

(When ordering parts, state Model, Part Number, and Description.)

CAPACITORS (cont)

ITEM No.	RATING	MFGR. PART No.	REPLACEMENT DATA			
			CORNELL-DUBILIER PART No.	MALLORY PART No.	SPRAGUE PART No.	
					Q-LINE	GENERAL LINE
C182	.039 10%		DPMS6S39	M192P3939R8	QFT2-159	1FT-S39
C183	.0047		GP4700	GP247		5GA-D47
C184	120 NPO 10%			CN0312		10TCC-T12
C185	.0047		GP4700	GP247		5GA-D47
C186	.0047		GP4700	GP247		5GA-D47
C187	.0047		GP4700	GP247		5GA-D47
C188	.047 10%		DPMS2S47	M192P4739R8	QFT2-171	1FT-S47
C189	.047 10%		DPMS2S47	M192P4739R8	QFT2-171	1FT-S47
C190	.01 10%			MAG5011		
C191	33 NPO 5%		NP033	CN0433	QCC2-22	10TCC-Q33
C192	.01 10%			MAG5011		
C193	.022				QC1-173	HY-725
C194	18 NPO			CN0418		10TCC-Q18
C195	.01 10%			MAG5011		
C196	.022				QC1-173	HY-725
C197	.022				QC1-173	HY-725
C198	.039 10%		DPMS6S39	M192P3939R8	QFT2-159	1FT-S39
C200	.01 10%		WMF1S1	M192P1039R8	QFT2-91	1FT-S10
C201	.01 10%		WMF1S1	M192P1039R8	QFT2-91	1FT-S10
C204	.01 10%			MAG5011		
C205	.01 10%			MAG5011		
C206	.022				QC1-173	HY-725
C207	.01 10%			MAG5011		
C208	.01 10%			MAG5011		
C209	.01 10%			MAG5011		
C210	.01 10%			MAG5011		
C213	.1 10%		WMF05P1	M192P1049R8	QFT2-215	1FT-P10
C214	.01 10%			MAG5011		
C215	.022				QC1-173	HY-725
C216	.022				QC1-173	HY-725
C217	.022				QC1-173	HY-725
C219	.022				QC1-173	HY-725
C220	.022				QC1-173	HY-725
C221	.022				QC1-173	HY-725
C222	.022				QC1-173	HY-725
C223	.022				QC1-173	HY-725
C224	.022				QC1-173	HY-725
C225	.022				QC1-173	HY-725
C226	.022				QC1-173	HY-725
C227	.022				QC1-173	HY-725
C228	.022				QC1-173	HY-725
C229	.01 10%			MAG5011		
C230	.022				QC1-173	HY-725
C231	.022				QC1-173	HY-725
C241	.039 10%		DPMS6S39	M192P3939R8	QFT2-159	1FT-S10
C242	47 NPO 5%		NP047	CN0447	QCC2-26	10TCC-Q47
C401	.047 10%		DPMS2S47	M192P4739R8	QFT2-171	1FT-S47
C405	.01 10%			MAG5011		
C406	.01 10%			MAG5011		
C408	.01 10%			MAG5011		
C410	.01 10%			MAG5011		
C415	.01 10%			MAG5011		
C416	.01 10%			MAG5011		
C417	.01 10%			MAG5011		
C418	.01 10%			MAG5011		
C421	.01 10%			MAG5011		
C422	.022				QC1-173	HY-725
C423	.022				QC1-173	HY-725
C606	.01 10%			MAG5011		
C608	.01 10%			MAG5011		

* Not normally in distributor's stock. Available thru distributor on order to manufacturer.

CONTROLS (All wattages 1/2 watt, or less, unless listed)

ITEM No.	FUNCTION	RESISTANCE	REPLACEMENT DATA		
			MFGR. PART No.	MALLORY PART No.	TRW PART No.
VR1	Signal Meter	20K		RVA0911H253	U260R253B
VR2	RF Gain	100K		RVA0911H104	U260R104B
	RF Gain	20K	(6)		
VR3	Squelch Range	100K		RVA0911H104	U260R104B
VR4	Balance	50K		RVA0911H503	U260R503B
VR5	AM RX Gain	100K		RVA0911H104	U260R104B
VR6	Mic Level	5000			
VR7	AM AMC	5000		RVA0911H502	U260R502B
VR8	AM TX Level	10K		RVA0911H103	U260R103B
VR9	TX Freq	5000		RVA0911H502	U260R502B
VR12	TX Power Meter	100K		RVA0911H104	U260R104B
VR15	Bias	500		RVA0911H501	U260R501B
VR16	Bias	500		RVA0911H501	U260R501B
VR401	Clarifier	20K			
VR404	Squelch	100K			
VR405	Volume/Switch	10K			
VR408	Mic Gain	20K		RVA0911H253	U260R253B

(6) Alternate part, may be used in some versions.

RESISTORS (Power and Special)

ITEM No.	RATING	REPLACEMENT DATA	
		MFGR. PART No.	WORKMAN PART No.
R107	10 5W WW		24-3030

ITEM No.	RATING	REPLACEMENT DATA	
		MFGR. PART No.	WORKMAN PART No.

COILS (RF-IF)

ITEM No.	FUNCTION	REPLACEMENT DATA			REMARKS
		PART No.	OTHER IDENTIFICATION	MILLER PART No.	
L1	Noise Blanker		LA029	CBS740-T	
L2	Noise Blanker		LA155		
L3	Rec Antenna (27MHz)		LA152		
L4	Rec RF (27MHz)		LA156		
L5	Rec Mixer (7.8MHz)		LA179		
L7	Carrier Insert (7.8MHz)		LA038	CBS512-7TC	
L8	IF (7.8MHz)		LA096	CBS511-7TC	
L9	RF Choke (470uH)				
L10	RF Choke (56mH)				
L11	RF Choke (68mH)				
L12	RF Choke (470uH)				
L13	RF Choke (470uH)				
L14	RF Choke (470uH)				
L16	VCO Output (34MHz)		LA160		
L17	VCO Osc.		LA191		
L18	RF Choke (470uH)				
L19	RF Choke (100uH)				
L20	RF Choke (470uH)				
L21	RF Choke (470uH)				
L22	RF Choke (470uH)				
L23	RF Choke (470uH)				
L24	Tripler (33MHz)		LA190		
L25	RF Choke (470uH)				
L26	RF Choke (470uH)				
L27	RF Choke				
L28	RF Choke				
L29	RF Choke				
L30	XMT Antenna (27MHz)				
L31	RF Choke				
L32	Final (27MHz)				
L33	RF Choke				
L34	RF Choke				
L35	XMT Amp				
L36	XMT Buffer				
L37	XMT Mixer (27MHz)		JHLA157(1)		
L38	XMT Mixer (27MHz)		JHLA157(1)		
L39	XMT Mixer (7.8MHz)		LA038	CBS512-7TC	
L40	RF Choke				
L43	RF Choke (1uH)				
L44	RF Choke (1uH)				
L45	RF Choke (470uH)				
L401	RF Choke (4.7uH)				
L403	RF Choke (4.7uH)				
L405	RF Choke (4.7uH)				
L406	RF Choke (4.7uH)				
L407	RF Choke (4.7uH)				
L408	RF Choke (4.7uH)				
L410	RF Choke (4.7uH)				
L411	RF Choke (4.7uH)				
L412	RF Choke (4.7uH)				

(1) Number on unit.

PARTS LIST AND DESCRIPTION (CONTINUED)

(When ordering parts, state Model, Part Number, and Description.)

TRANSFORMER (Audio Output)

ITEM No.	IMPEDANCE		REPLACEMENT DATA			NOTES
	PRI.	SEC.	MFGR. PART No.	THORDARSON PART No.	TRIAD PART No.	
T1	7.5	12.6	TF106			

SPEAKER

ITEM No.	TYPE	REPLACEMENT DATA		NOTES
		MFGR. PART No.	QUAM PART No.	
SP401	3 1/2" PM, 8 Ohms		3A05Z8	

FUSE DEVICES

ITEM No.	DESCRIPTION	REPLACEMENT DATA						
		PART No.		BUSS PART No.		LITTELFUSE PART No.		WORKMAN PART No.
		DEVICE	HOLDER	DEVICE	HOLDER	DEVICE	HOLDER	DEVICE
F401	3A Quick-acting			AGC3	HRK	312003	150145	FG3-2

MISCELLANEOUS

ITEM No.	PART NAME	PART No.	NOTES
D65	LED		Red 50 1.90V @ 8mA, TX
D66	LED		Green 50 2.07V @ 14mA, RX
D401	LED		Channel Indicator (Each segment supplied with 1.93V @ 8mA)
FT1	Filter		7.8MHz
J401	Jack		Antenna Connector
J402	Connector		Microphone
J403	Jack		3P, PA, SP
J404	Jack		3P, EXT SP
J407	Jack		DC
M401	Meter		200UA, SIG/RF/TX Power (Includes PL401 Lamp)
PL401	Lamp		13.71V @ 40mA (Part of M401)
RL1	Relay		RL023, 3P
S401	Switch		Off/NB, Slide
S402	Switch		AM/USB/LSB, Rotary
S403	Switch		NB/Off, Slide
S404	Switch		RF Gain/On/Off, Slide
S405	Switch		CB/PA, Slide
S406	Switch		Red/Orange
S407	Switch		Brite/Dim, Slide
S408	Switch		Channel Selector
X1	Crystal		X-TAL 7.8025MHz, HC-25C/U
X2	Crystal		X-TAL 7.7975MHz, HC-25C/U
X3	Crystal		X-TAL 11.2858MHz, HC-25C/U
X4	Crystal		X-TAL 11.2842MHz, HC-25C/U
X5	Crystal		X-TAL 10.240MHz, HC-25C/U
X6	Crystal		X-TAL 11.2850MHz, HC-25C/U
	Microphone		
	P.C. Board		A
	P.C. Board		B
	P.C. Board		Main

For Supplier Address See PHOTOFACT Index

NOTE

Repair or adjustment of transmitter circuits must be under supervision of a person with first-or second-class radiotelephone license.
(Refer to FCC Rules and Regulations Part 95, Subpart C & D.)

The frequency of the transmitter should be checked periodically with a secondary frequency standard to insure proper and legal operation.

Best results will be obtained when adjusting the final RF output circuit if the antenna normally used is connected and the chassis is as nearly in the cabinet as possible.

Connect either 50-ohm dummy load or the normally used antenna system.

MODEL STALKER XV

MANUFACTURER'S SPECIFICATIONS

GENERAL	
Channels	40
Frequency Range	26.965 MHz to 27.405 MHz
Frequency Control	PLL Synthesized
Antenna Impedance	50 ohm
Power Input	117V AC or 13.8V DC
Accessories	AC and DC power cord, detachable dynamic microphone, microphone hanger, mounting bracket
Size	14-31/32"(W) x 12-13/32"(D) x 4-23/32"(H); including knobs
Weight	14-1/4 lbs.
TRANSMITTER	
Output Power	AM 4 watts SSB 12 watts PEP
Emission Type AM	6A3
Emission Type SSB	3A3J
Hum and Noise	Better than –60dB
Frequency Tolerance	0.003%
Modulation Percentage (Peak)	100%
RECEIVER	
Sensitivity at 10 dB S+N/N	AM 0.5 μV SSB 0.25 μV
Sensitivity for 500 mW Audio Output	AM 0.25 μV SSB 0.15 μV
Squelch Threshold	AM 0.5 μV SSB 0.5μV
Squelch Deepest Point	1000 μV
"S" Meter S-9	100 μV
Delta Tune/Clarifier	±1.25 kHz
Maximum AF Output Power	4 watts
AF Output Power/10% Distortion	3 watts
Selectivity BW @ 6 dB Down	6 kHz
Adjacent Channel Rejection	-55 dB
Image Rejection	Greater than –40 dB
Speaker Impedance	8 ohms
PUBLIC ADDRESS	
Output Power @ 10% Distortion	3.0 Watts

Courtesy of the Manufacturer

HOWARD W. SAMS & CO., INC. Indianapolis, Indiana 46206

 9CF1085

ALIGNMENT INSTRUCTIONS

CAUTION: Use isolation transformer or observe polarity when connecting test equipment.
Maintain line voltage at 120V AC. Allow a 15-minute warm-up period.
Adjust RT301 for 13.80 volts at TP15.
Connect low sides of test equipment to ground unless specified otherwise.
Connect 50-ohm dummy load or antenna before keying transmitter.
Connect microphone.

Suggested Alignment Tools:	GC ELECTRONICS:
L1 thru L10, L13, L14, L17 thru L20, L26 thru L29 ...	9440
L36, L39	8728, 8728A, 9304
CT1, CT2, CT3	5000, 8276, 9089

SYNTHESIZER ALIGNMENT

TEST EQUIPMENT	TRANSCEIVER	ADJUST	REMARKS
Input of frequency counter to TP12 (IC2 Pin 8).	Ch. 19, AM		Check for 10.240MHz.
Input of oscilloscope to TP16 (L18 Secondary).	Ch. 19, AM Clarifier Midrange	L18	Adjust for maximum RF (200mV typical). (See Figure 1.)
Input of DC meter to TP9 (IC1 Pin 5).	Ch. 40, AM	L13	Adjust for 5.00 volts. Check for approx. 3.30 volts on channel 1.
Input of oscilloscope to TP1 (L14 Secondary).	Ch. 19, USB	L14	Adjust for maximum RF (1.40 volts typical). (See Figure 2.)
Input of frequency counter to TP1 (L14 Secondary).	Ch. 19, USB Clarifier Midrange	CT3	Adjust for 34.9875MHz ±20Hz. Check all channels. (See Truth Chart for correct frequencies.)
Input of frequency counter to TP1 (L14 Secondary).	Ch. 19, LSB Clarifier Midrange	L19	Adjust for 34.9825MHz ±20Hz. Check all channels. (See Truth Chart for correct frequencies.)
Input of frequency counter to TP1 (L14 Secondary).	Ch. 19, AM Clarifier Midrange	L20	Adjust for 34.9850MHz ±20Hz. Check all channels. (See Truth Chart for correct frequencies.)
Input of frequency counter to TP1 (L14 Secondary).	Ch. 19, XMT, LSB	VR3	Adjust for 34.9825MHz ±20Hz.
Input of frequency counter to TP10 (Junction of L12 and C68).	Ch. 1, USB		Check for 1.430MHz. Check all channels. (See Truth Chart for-correct frequencies.)
Input of frequency counter to TP3 (TR13 Base).	Ch. 19, USB	CT1	Adjust for 7.8025MHz +5Hz or -0Hz.
Input of frequency counter to TP3 (TR13 Base).	Ch. 19, LSB	CT2	Adjust for 7.7975MHz +0Hz or -5Hz.
Input of frequency counter to TP3 (TR13 Base). Disconnect TP7 and TP8 (at Final Amp TR41).	Ch. 19, XMT, AM	L17	Adjust for 7.8000MHz +5Hz.

RECEIVER ALIGNMENT

Connect an AC VTVM or AF wattmeter across speaker voice coil.
Adjust volume control to obtain a suitable indication.
Set generator output low enough to prevent AGC limiting.
Mode AM, RF Gain Maximum, Squelch MINIMUM, Clarifier Midrange, ANL/NB Off.

AM

TEST EQUIPMENT	TRANSCEIVER	ADJUST	REMARKS
Output of signal generator thru .01uF to TP13 (TR10 Collector). 7.8MHz, 1000Hz @ 30% modulation.	Ch. 19	L3, L4	Adjust for maximum output.
Output of signal generator thru .01uF to antenna input. 27.185MHz, 1000Hz @ 30% modulation	Ch. 19	L5, L6, L7 L8, L9, L10	Adjust for maximum output. If necessary readjust L3 and L4 for maximum.
Output of signal generator thru .01uF to antenna input. Input of oscilloscope to TP14 (TR6 Emitter). Inject a 100pps, 1uSec. pulse width signal at antenna input. Output 10db signal to noise plus noise ratio of receiver.	Ch. 19 ANL/NB On	L1, L2	Adjust for maximum amplitude pulses. (3.2 volts typical.) (See Figure 3.)

RECEIVER ADJUSTMENTS

Connect an AC VTVM or AF wattmeter across speaker voice coil.
Adjust volume control to obtain a suitable indication.
Mode AM, RF Gain Maximum, Squelch MINIMUM, Clarifier Midrange, ANL/NB Off.

TEST EQUIPMENT	TRANSCEIVER	ADJUST	REMARKS
Output of signal generator thru .01uF to antenna input. 27.185MHz, 1000Hz @ 30% modulation Output 1000uV.	Ch. 19 Squelch Maximum	VR2	SQUELCH RANGE Adjust so that squelch just breaks.
Output of signal generator thru .01uF to antenna input. 27.185MHz, 1000Hz @ 30% modulation Output 100uV.	Ch. 19 S/RF/MOD S/RF	VR1	SIG METER Adjust for 9 on sig scale of meter.

TRANSMITTER ALIGNMENT

Connect an RF wattmeter and 50-ohm, 25-watt dummy load to antenna connector.
NOTE: Be sure to check transmit frequency and power on all active channels after alignment of transmitter.
See page 4 for channel frequencies.

TEST EQUIPMENT	TRANSCEIVER	ADJUST	REMARKS
Input of RF wattmeter and 50-ohm, 25 watt dummy load to antenna input. Inject a two tone 50mV signal at Mic input.	Ch. 19, USB Mike Gain Maximum	L26, L27 L28, L29, L36	Set VR 7 to MINIMUM. Adjust for maximum RF output.
Input of spectrum analyzer or harmonic meter to antenna input.	Ch. 19, AM Mike Gain MINIMUM	L39	Adjust for MINIMUM at 54MHz (2nd harmonic).

TRANSMITTER ADJUSTMENTS

Connect an RF wattmeter and 50-ohm, 25-watt dummy load to antenna connector.
NOTE: Be sure to check transmit frequency and power on all active channels after adjustment of transmitter.
See page 4 for channel frequencies.

TEST EQUIPMENT	TRANSCEIVER	ADJUST	REMARKS
Input of oscilloscope or modulation meter to antenna input.	Ch. 19, AM S/RF/MOD MOD	VR12	MOD METER Adjust so that MOD meter agrees with external modulation meter.
Insert a 0-150mA DC current meter at TP8. No modulation.	Ch. 19, USB Mike Gain MINIMUM	VR8	RF DRIVER BIAS Adjust for 35mA idle current. Reconnect TP8.
Insert a 0-150mA DC current meter at TP7. No modulation.	Ch. 19, USB Mike Gain MINIMUM	VR9	RF FINAL BIAS Adjust for 45mA idle current. Reconnect TP7.
Input of RF wattmeter and 50-ohm, 25 watt dummy load to antenna input. No modulation.	Ch. 19, USB Mike Gain MINIMUM	VR5	CARRIER BALANCE Adjust for MINIMUM RF output. Check LSB and readjust if necessary for MINIMUM RF output.
Input of RF wattmeter and 50-ohm, 25 watt dummy load to antenna input. Inject a two tone, 50mV signal at Mic input.	Ch. 19, USB Mike Gain Maximum	VR7	RF ALC Adjust for 11.0 watts PEP RF output maximum.
Input of RF wattmeter and 50-ohm, 25 watt dummy load to antenna input. No modulation.	Ch. 19, AM Mike Gain MINIMUM	VR6	AM POWER Adjust for 4.0 watts RF output maximum.
Input of RF wattmeter and 50-ohm, 25 watt dummy load to antenna input. No modulation.	Ch. 19, AM Mike Gain MINIMUM S/RF/MOD S/RF	VR10	RF PWR METER Adjust so that PWR meter agrees with RF wattmeter.

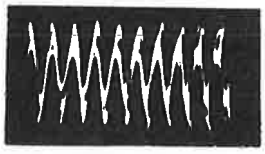
Figure 1

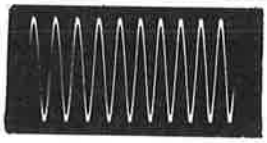
Figure 2

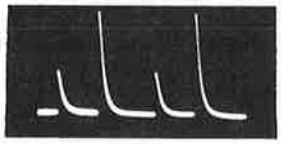
Figure 3

TRUTH CHART

CHANNEL	1 = 7.98 Volts 0 = 0 Volts IC2 PROGRAM DIVIDER PINS 11	12	13	14	15	16			DIVIDER INPUT IN MHz AT TP10	AM REC VCO OUTPUT IN MHz AT TP1	USB REC VCO OUTPUT IN MHz AT TP1
1	0	0	1	1	1	1			1.430	34.765	34.7675
2	0	1	0	0	0	0			1.440	34.775	34.7775
3	0	1	0	0	0	1			1.450	34.785	34.7875
4	0	1	0	0	1	1			1.470	34.805	34.8075
5	0	1	0	1	0	0			1.480	34.815	34.8175
6	0	1	0	1	0	1			1.490	34.825	34.8275
7	0	1	0	1	1	0			1.500	34.835	34.8375
8	0	1	1	0	0	0			1.520	34.855	34.8575
9	0	1	1	0	0	1			1.530	34.865	34.8675
10	0	1	1	0	1	0			1.540	34.875	34.8775
11	0	1	1	0	1	1			1.550	34.885	34.8875
12	0	1	1	1	0	1			1.570	34.905	34.9075
13	0	1	1	1	1	0			1.580	34.915	34.9175
14	0	1	1	1	1	1			1.590	34.925	34.9275
15	1	0	0	0	0	0			1.600	34.935	34.9375
16	1	0	0	0	1	0			1.620	34.955	34.9575
17	1	0	0	0	1	1			1.630	34.965	34.9675
18	1	0	0	1	0	0			1.640	34.975	34.9775
19	1	0	0	1	0	1			1.650	34.985	34.9875
20	1	0	0	1	1	1			1.670	34.005	35.0075
21	1	0	1	0	0	0			1.680	35.015	35.0175
22	1	0	1	0	0	1			1.690	35.025	35.0275
23	1	0	1	1	0	0			1.720	35.055	35.0575
24	1	0	1	0	1	0			1.700	35.035	35.0375
25	1	0	1	0	1	1			1.710	35.045	35.0475
26	1	0	1	1	0	1			1.730	35.065	35.0675
27	1	0	1	1	1	0			1.740	35.075	35.0775
28	1	0	1	1	1	1			1.750	35.085	35.0875
29	1	1	0	0	0	0			1.760	35.095	35.0975
30	1	1	0	0	0	1			1.770	35.105	35.1075
31	1	1	0	0	1	0			1.780	35.115	35.1175
32	1	1	0	0	1	1			1.790	35.125	35.1275
33	1	1	0	1	0	0			1.800	35.135	35.1375
34	1	1	0	1	0	1			1.810	35.145	35.1475
35	1	1	0	1	1	0			1.820	35.155	35.1575
36	1	1	0	1	1	1			1.830	35.175	35.1675
37	1	1	1	0	0	0			1.840	35.175	35.1775
38	1	1	1	0	0	1			1.850	35.185	35.1875
39	1	1	1	0	1	0			1.860	35.195	35.1975
40	1	1	1	0	1	1			1.870	35.205	35.2075

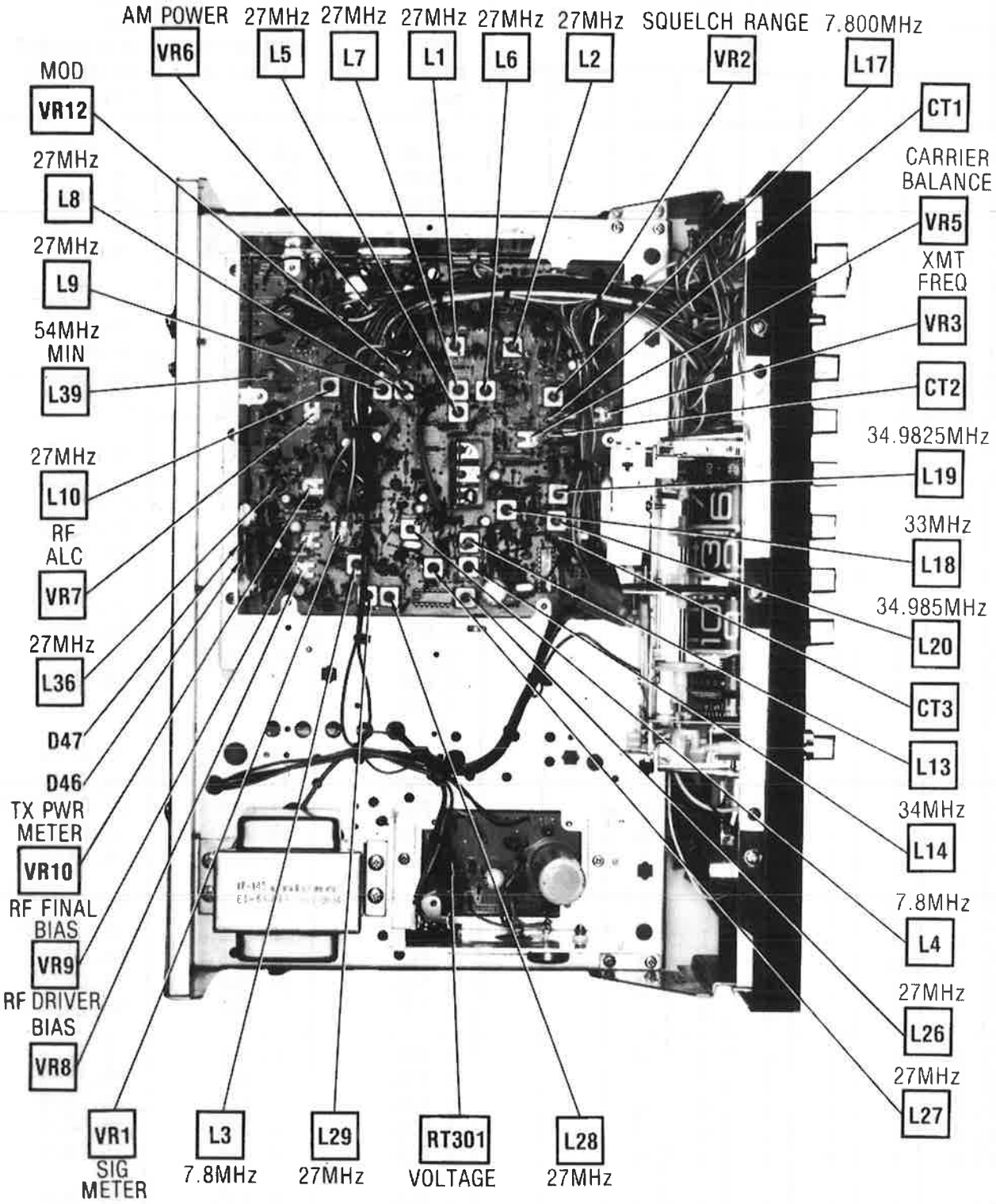

CHASSIS-VIEW

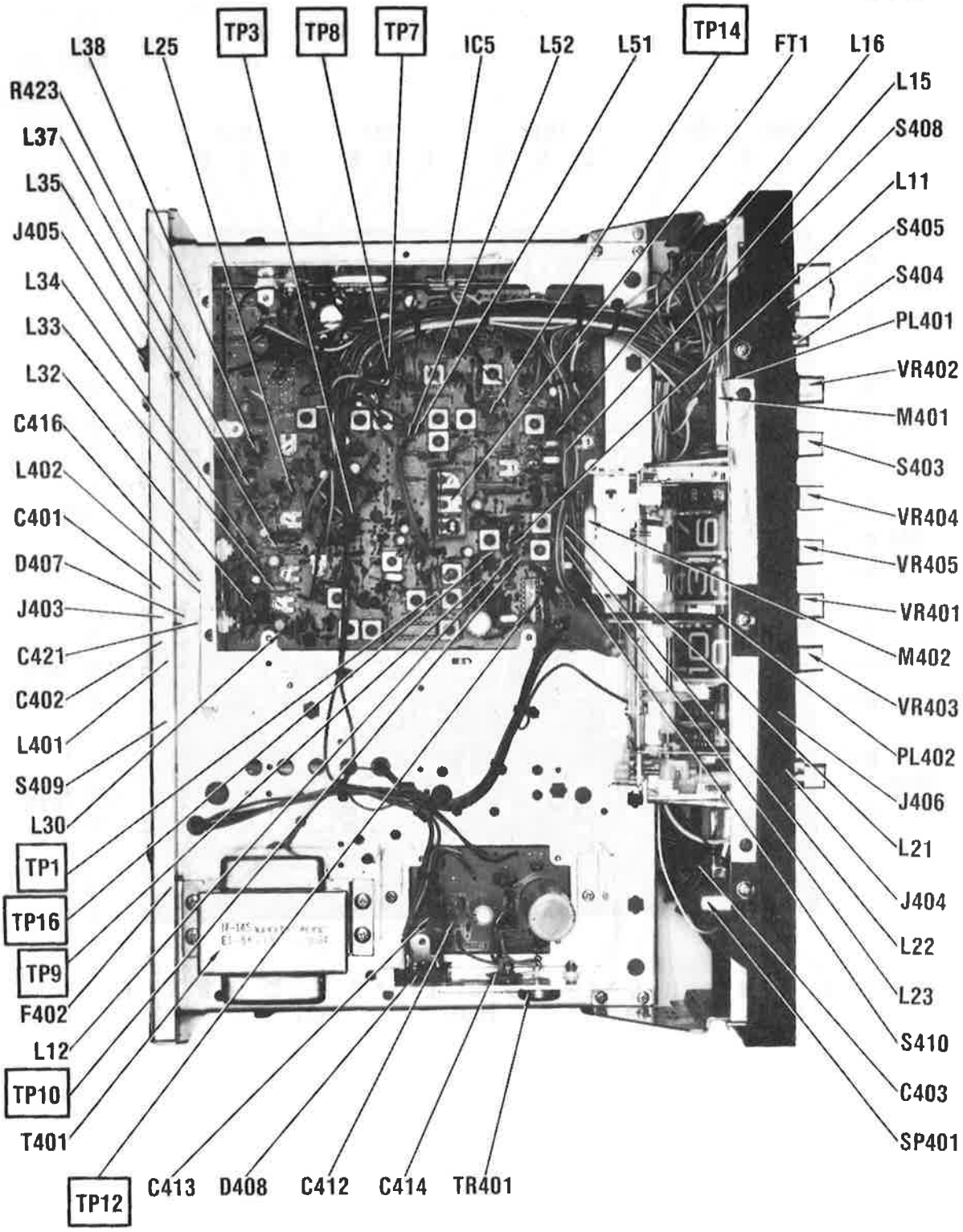

CHASSIS VIEW

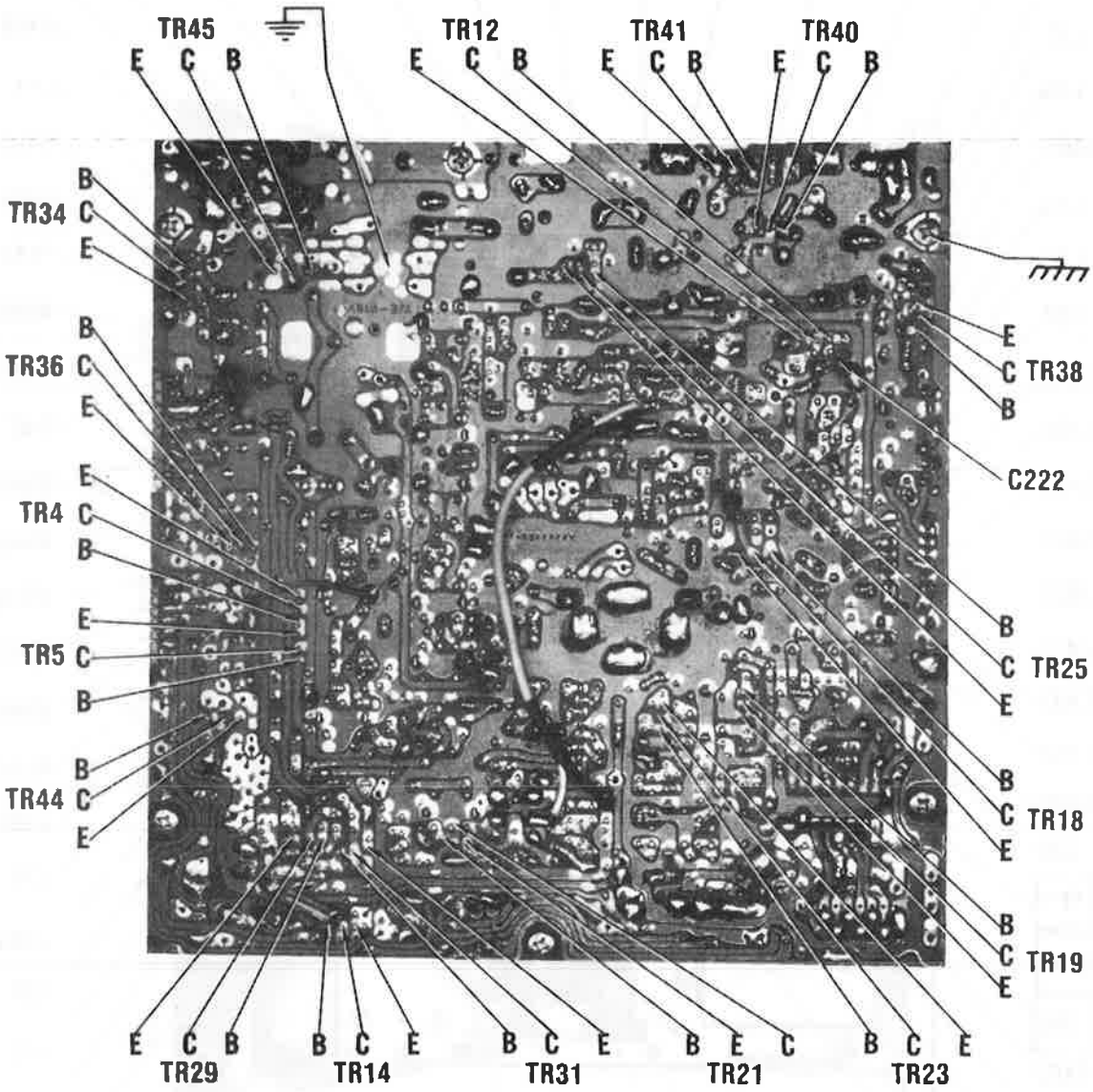
TR45
E C B
TR12
E C B
TR41
E C B
TR40
E C B
B
TR34 C
E
B
TR36 C
E
E
TR4 C
B
E
TR5 C
B
B
TR44 C
E
E
C TR38
B
C222
B
C TR25
E
B
C TR18
E
B
C TR19
E
E C B
TR29
B C E
TR14
B C E
TR31
B E C
TR21
B C E
TR23

MAIN BOARD

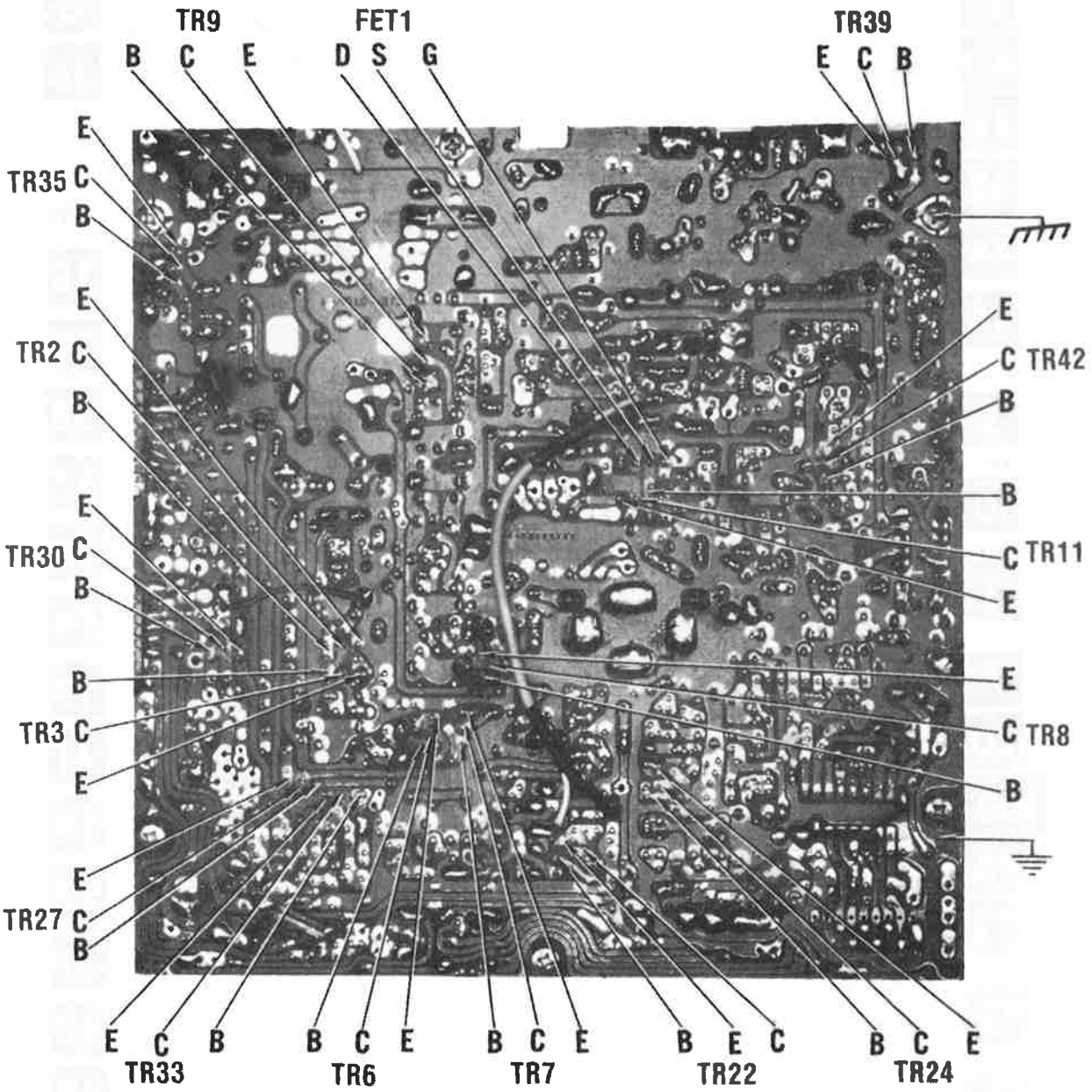
TR9
B C E
FET1
D S G
TR39
E C B
E
TR35 C
B
E
TR2 C
B
E
TR30 C
B
B
TR3 C
E
E
TR27 C
B
E
C TR42
B
B
C TR11
E
E
C TR8
B
E C B
TR33
B C E
TR6
B C E
TR7
B E C
TR22
B C E
TR24

MAIN BOARD

A Howard W. Sams CIRCUITRACE® Photo

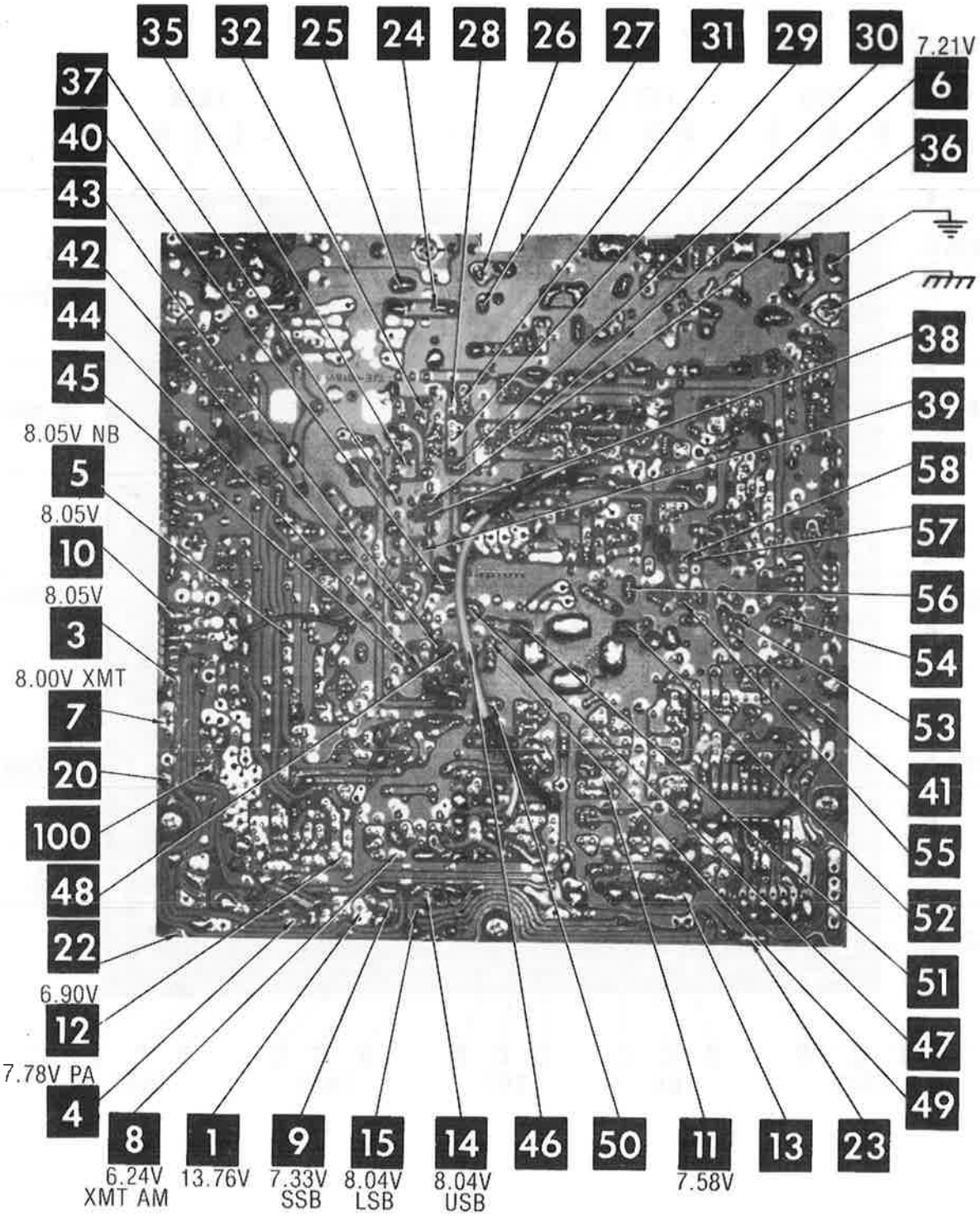

MAIN BOARD

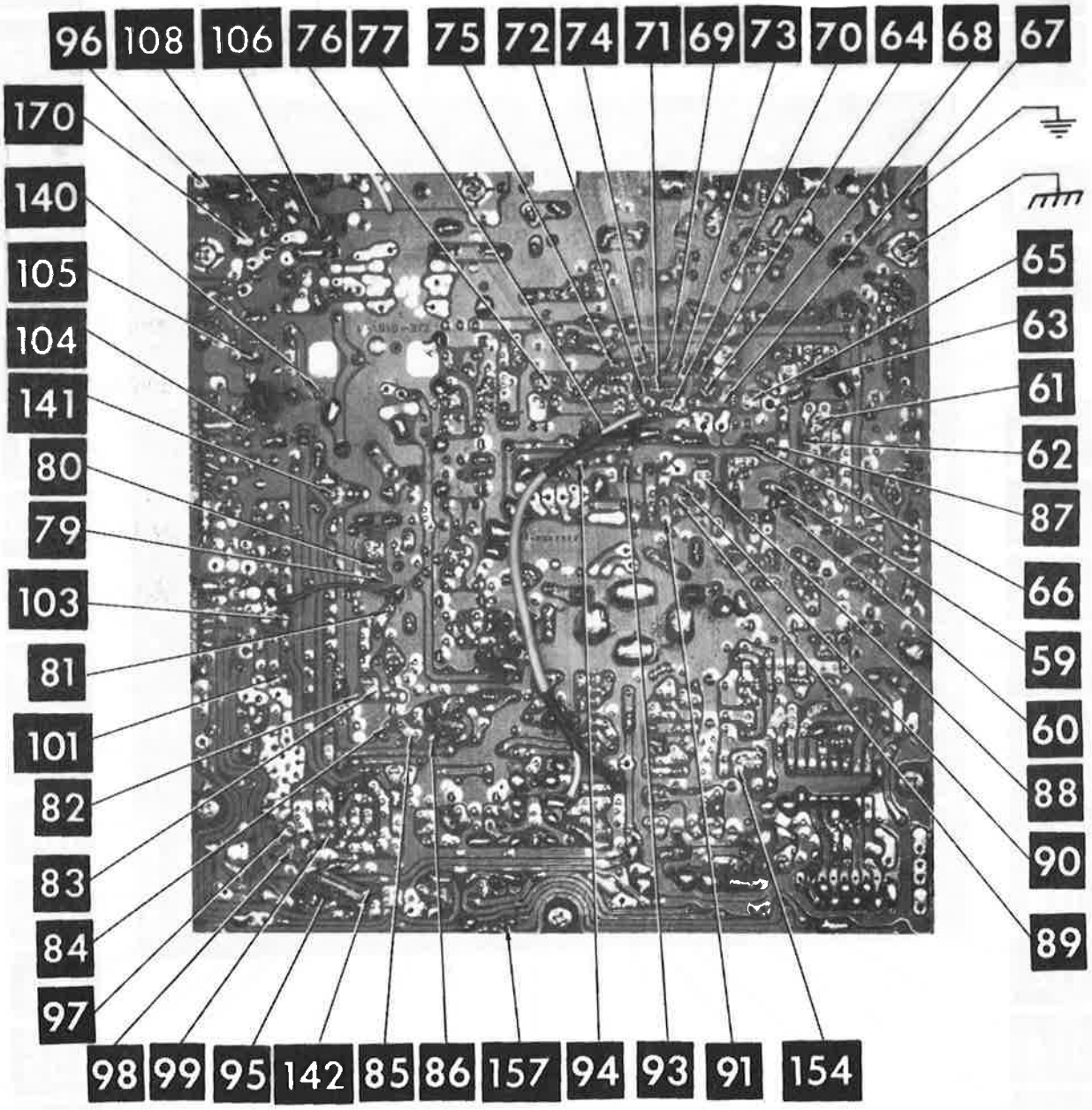
96
108
106
76
77
75
72
74
71
69
73
70
64
68
67
170
140
105
104
141
80
79
103
81
101
82
83
84
97
98
99
95
142
85
86
157
94
93
91
154
65
63
61
62
87
66
59
60
88
90
89

MAIN BOARD

A Howard W. Sams CIRCUITRACE® Photo

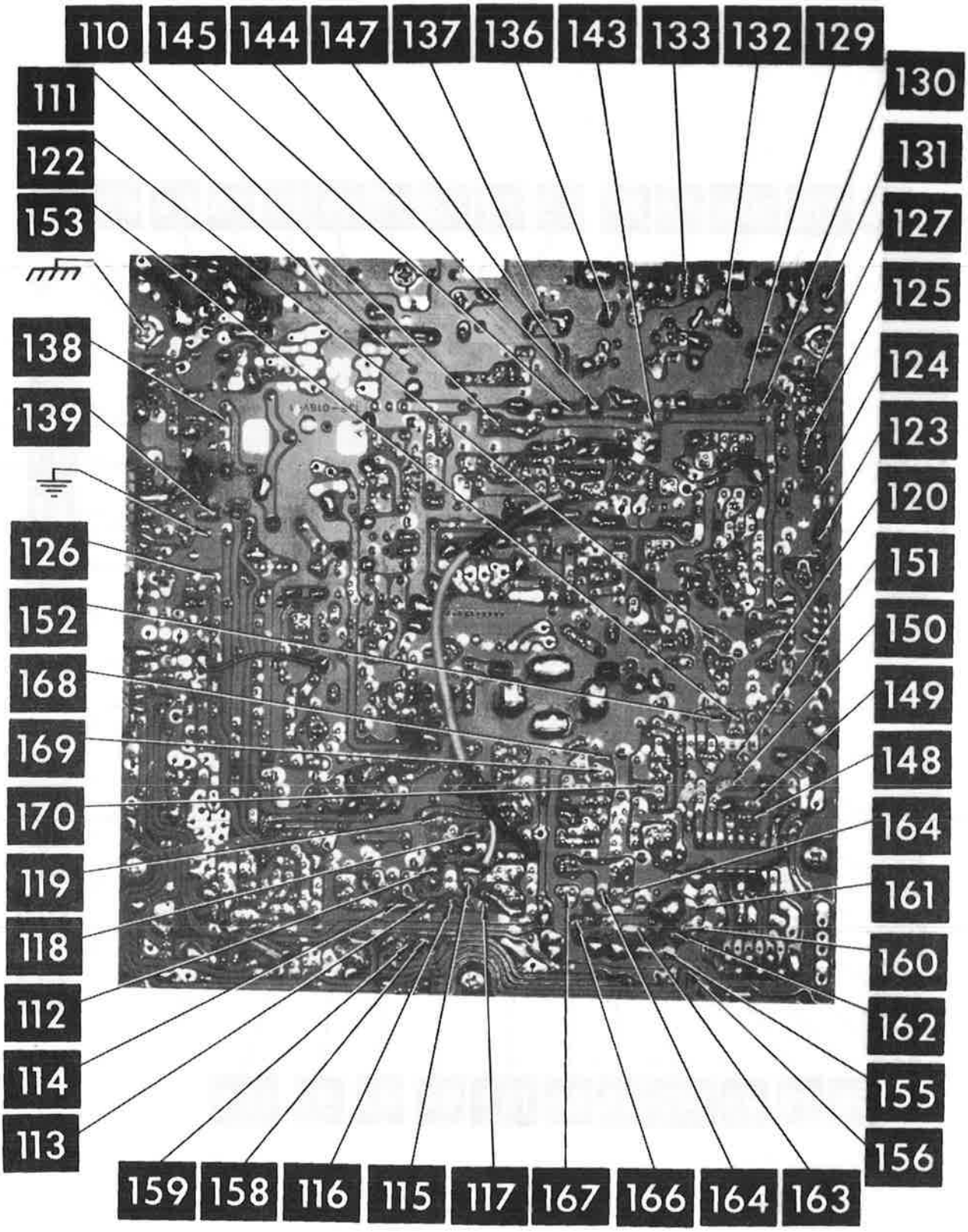

MAIN BOARD

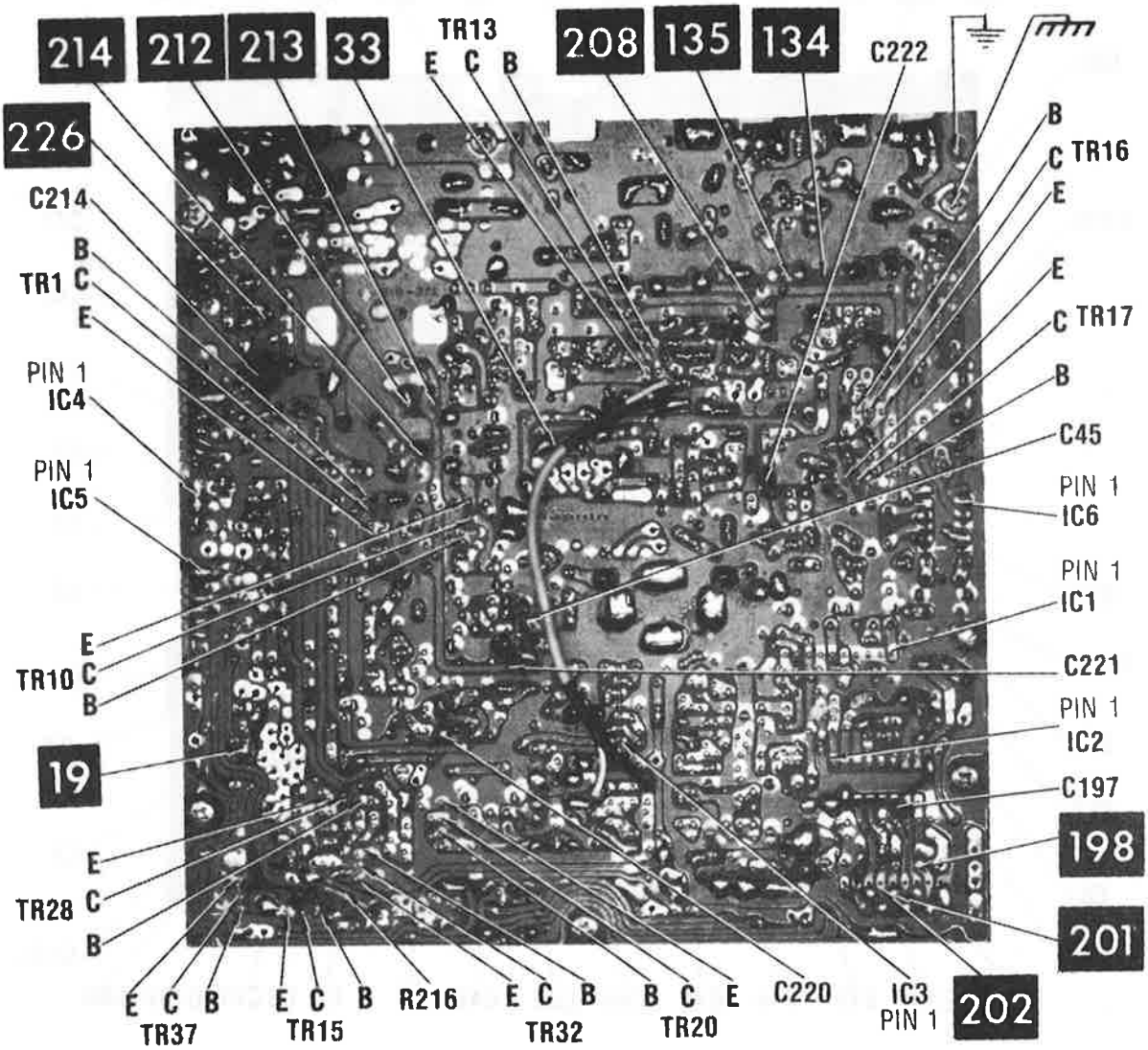
214
212
213
33
TR13
E C B
208
135
134
C222
226
C214
B
TR1 C
E
PIN 1
IC4
PIN 1
IC5
E
TR10 C
B
19
E
TR28 C
B
E C B
TR37
E C B
TR15
R216
E C B
TR32
B C E
TR20
C220
IC3
PIN 1
202
201
198
C197
PIN 1
IC2
C221
PIN 1
IC1
PIN 1
IC6
C45
B
C TR17
E
E
C TR16
B

MAIN BOARD

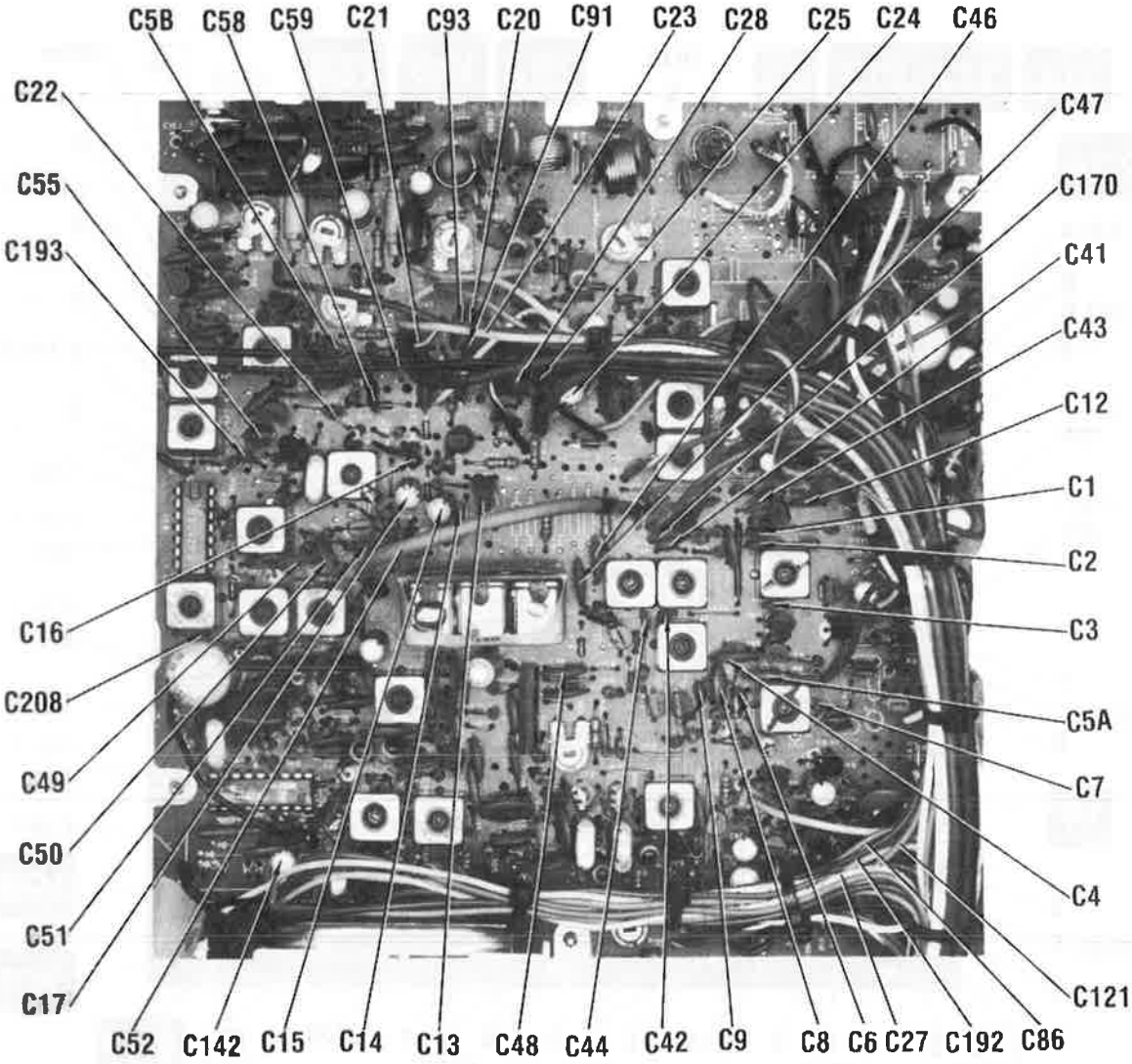
C5B
C58
C59
C21
C93
C20
C91
C23
C28
C25
C24
C46
C22
C47
C55
C170
C193
C41
C43
C12
C1
C2
C16
C3
C208
C5A
C49
C7
C50
C4
C51
C121
C17
C52
C142
C15
C14
C13
C48
C44
C42
C9
C8
C6
C27
C192
C86

MAIN BOARD

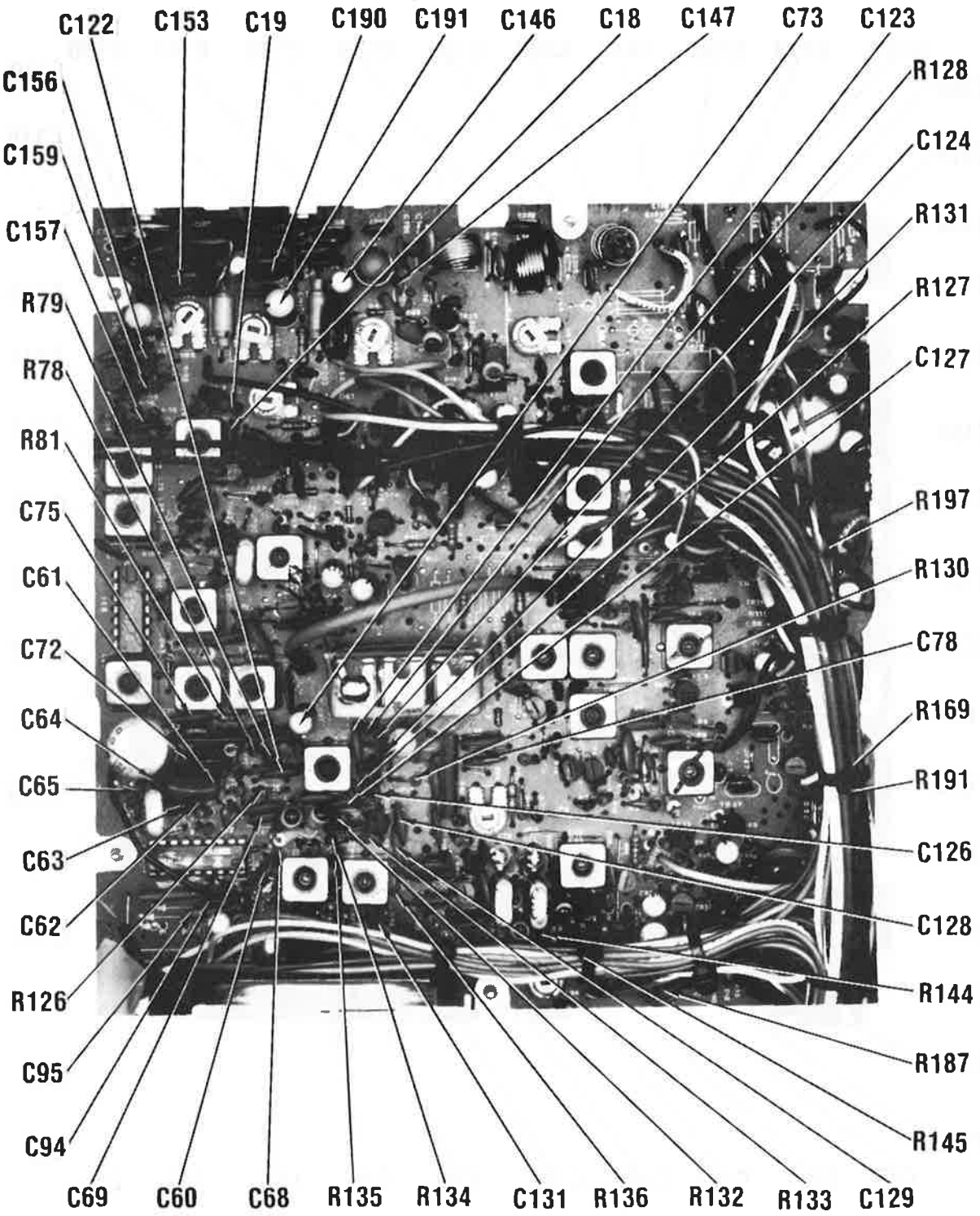
C122
C153
C19
C190
C191
C146
C18
C147
C73
C123
C156
R128
C159
C124
C157
R131
R79
R127
R78
C127
R81
C75
R197
C61
R130
C72
C78
C64
R169
C65
R191
C63
C126
C62
C128
R126
R144
C95
R187
C94
R145
C69
C60
C68
R135
R134
C131
R136
R132
R133
C129

MAIN BOARD

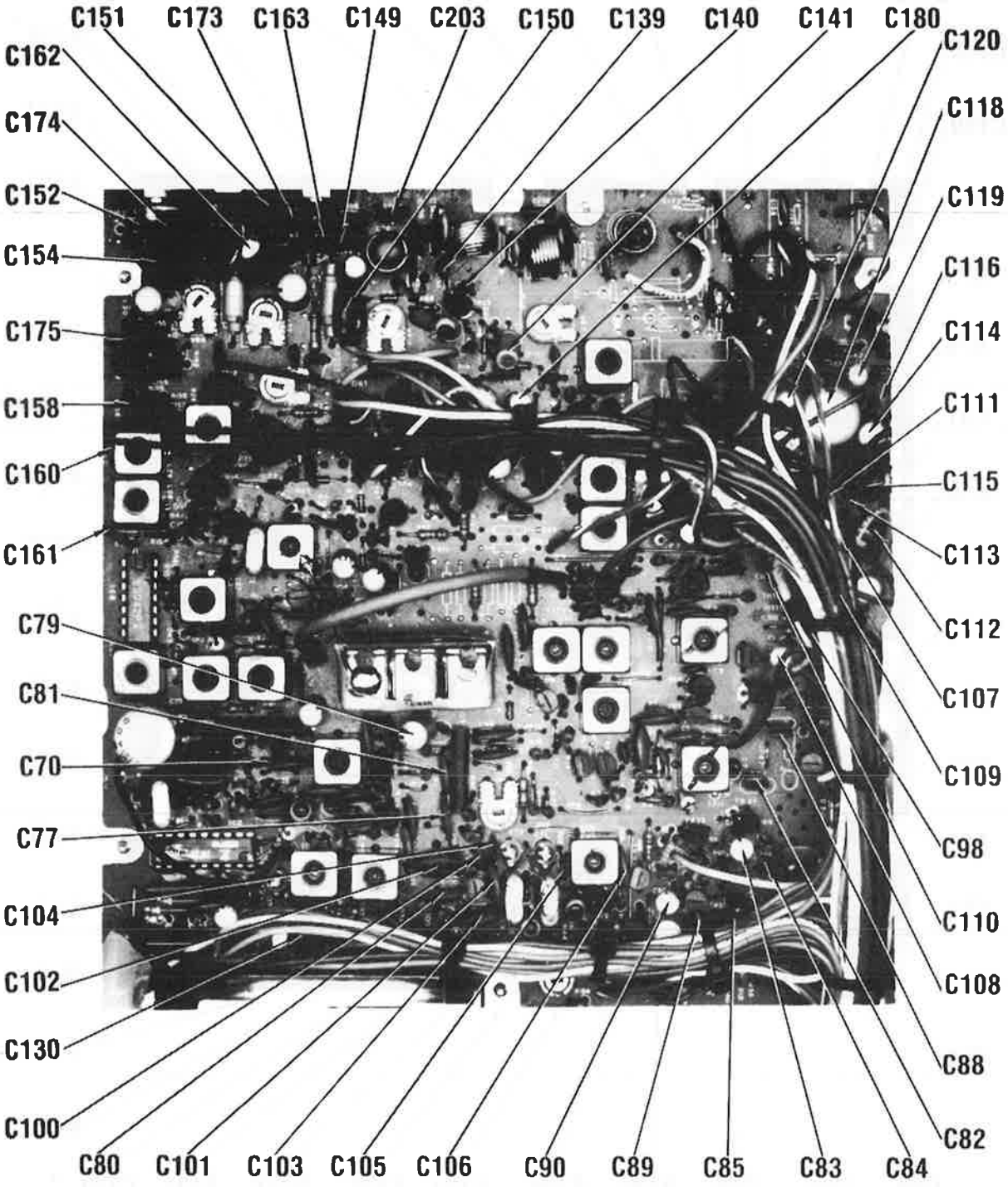
C151
C173
C163
C149
C203
C150
C139
C140
C141
C180
C120
C162
C118
C174
C119
C152
C116
C154
C114
C175
C111
C158
C115
C160
C113
C161
C112
C79
C107
C81
C109
C70
C98
C77
C110
C104
C108
C102
C88
C130
C82
C100
C80
C101
C103
C105
C106
C90
C89
C85
C83
C84

MAIN BOARD

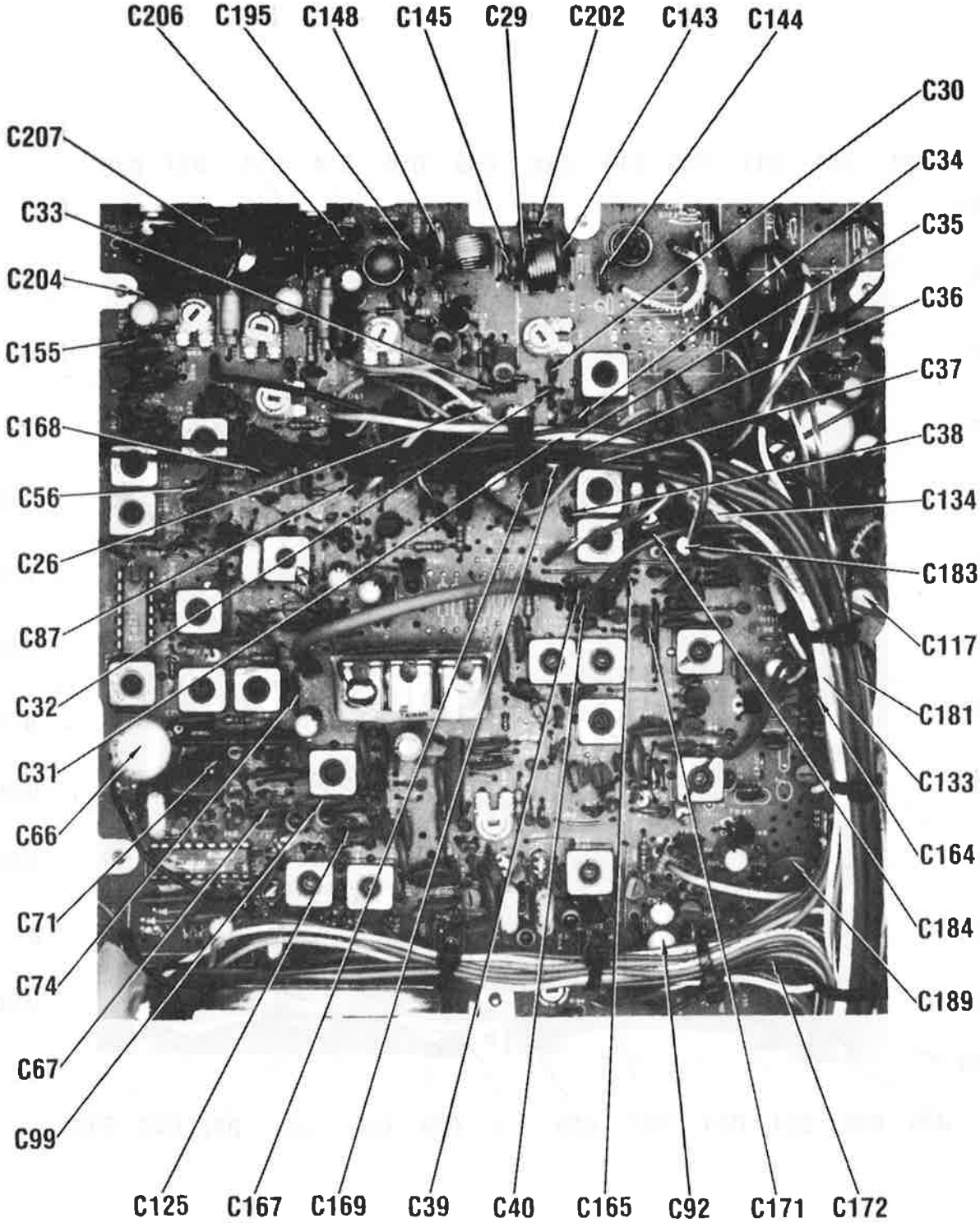
C206
C195
C148
C145
C29
C202
C143
C144
C30
C207
C34
C33
C35
C204
C36
C155
C37
C168
C38
C56
C134
C26
C183
C87
C117
C32
C181
C31
C133
C66
C164
C71
C184
C74
C189
C67
C99
C125
C167
C169
C39
C40
C165
C92
C171
C172

MAIN BOARD

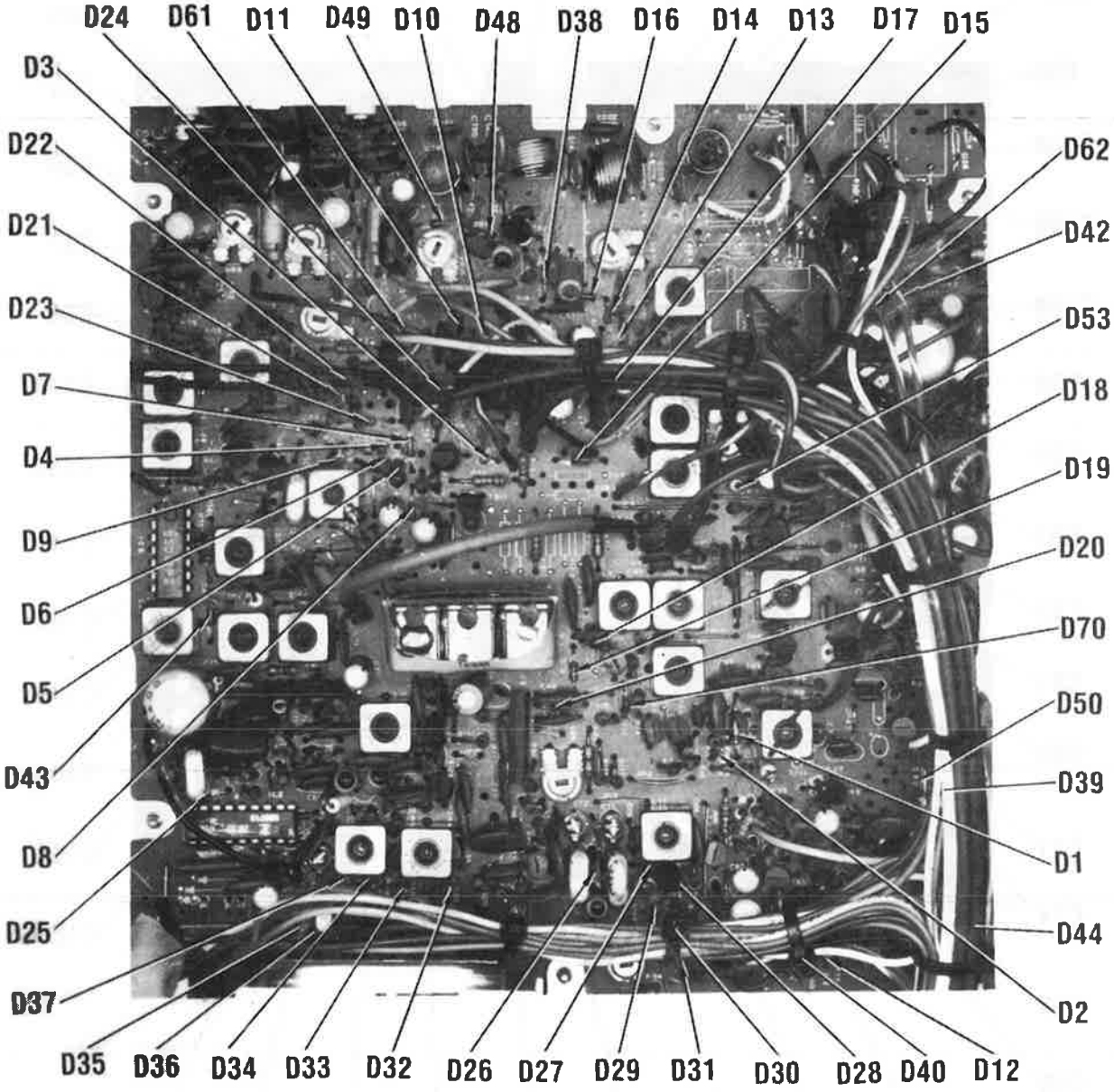
D24
D61
D11
D49
D10
D48
D38
D16
D14
D13
D17
D15
D3
D22
D21
D23
D7
D4
D9
D6
D5
D43
D8
D25
D37
D35
D36
D34
D33
D32
D26
D27
D29
D31
D30
D28
D40
D12
D2
D44
D1
D39
D50
D70
D20
D19
D18
D53
D42
D62

MAIN BOARD

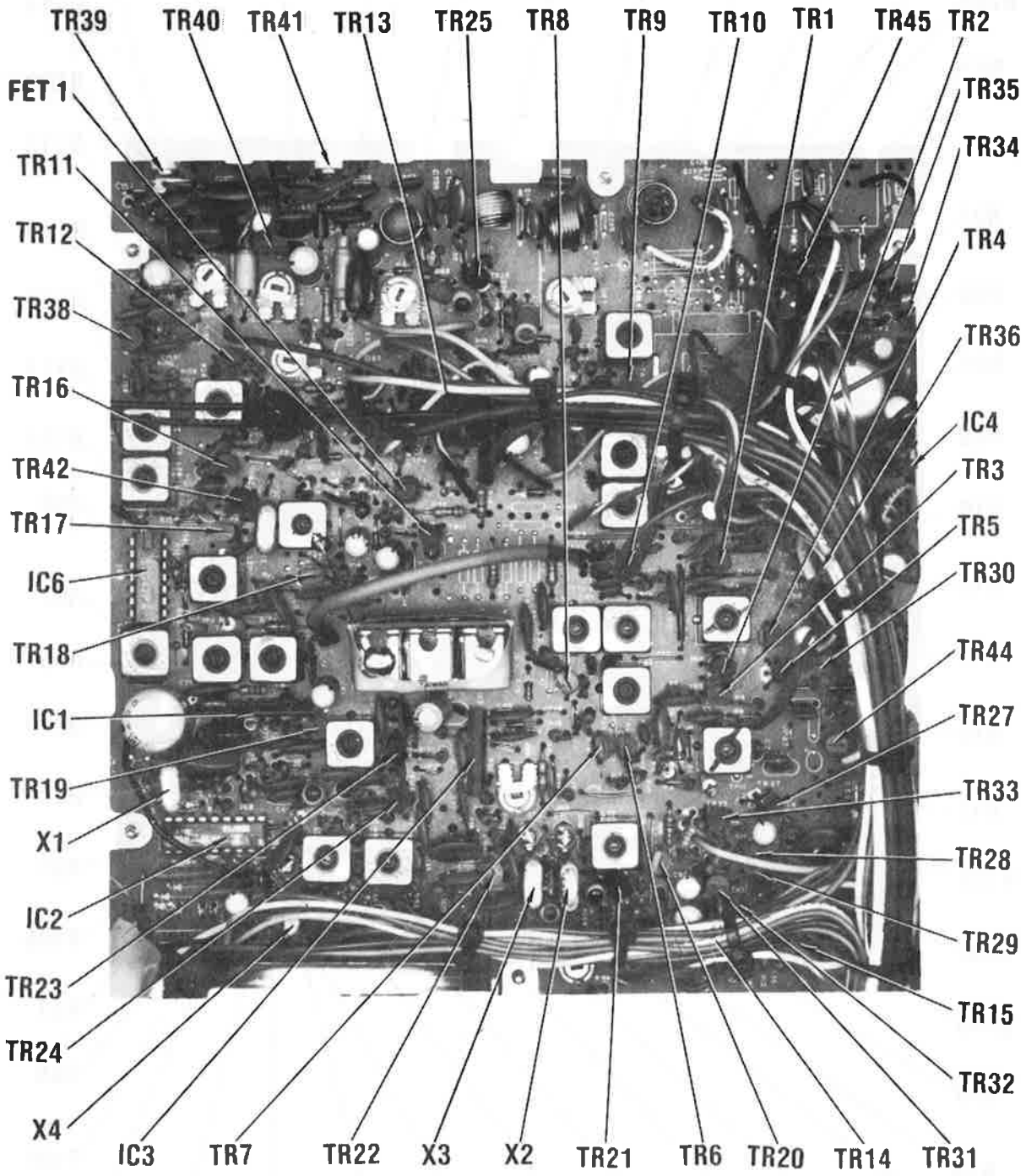
TR39
TR40
TR41
TR13
TR25
TR8
TR9
TR10
TR1
TR45
TR2
FET 1
TR35
TR11
TR34
TR12
TR4
TR38
TR36
TR16
IC4
TR42
TR3
TR17
TR5
IC6
TR30
TR18
TR44
IC1
TR27
TR19
TR33
X1
TR28
IC2
TR29
TR23
TR15
TR24
TR32
X4
IC3
TR7
TR22
X3
X2
TR21
TR6
TR20
TR14
TR31

MAIN BOARD

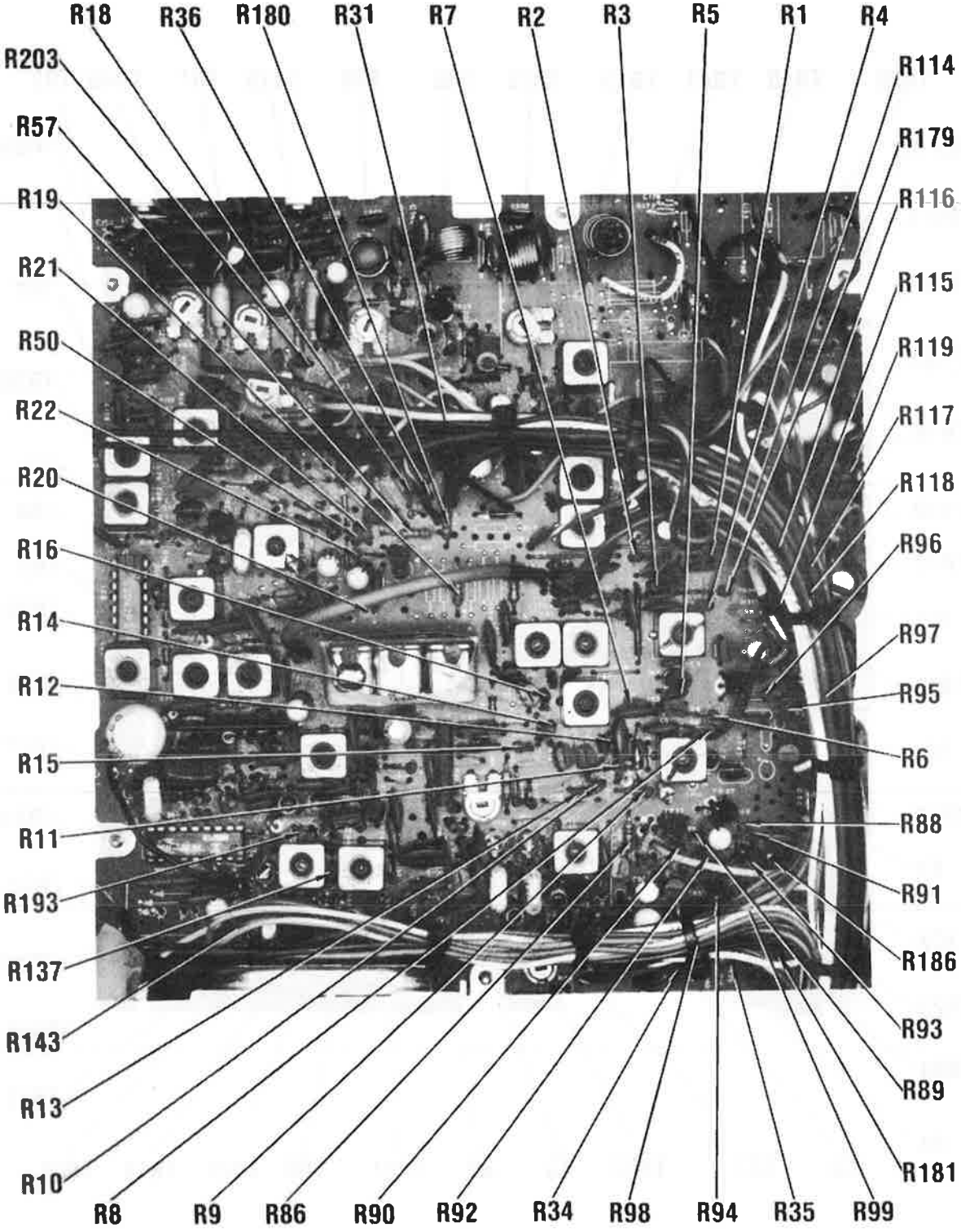
R18
R36
R180
R31
R7
R2
R3
R5
R1
R4
R203
R114
R57
R179
R19
R116
R21
R115
R50
R119
R22
R117
R20
R118
R16
R96
R14
R97
R12
R95
R15
R6
R11
R88
R193
R91
R137
R186
R143
R93
R13
R89
R10
R181
R8
R9
R86
R90
R92
R34
R98
R94
R35
R99

MAIN BOARD

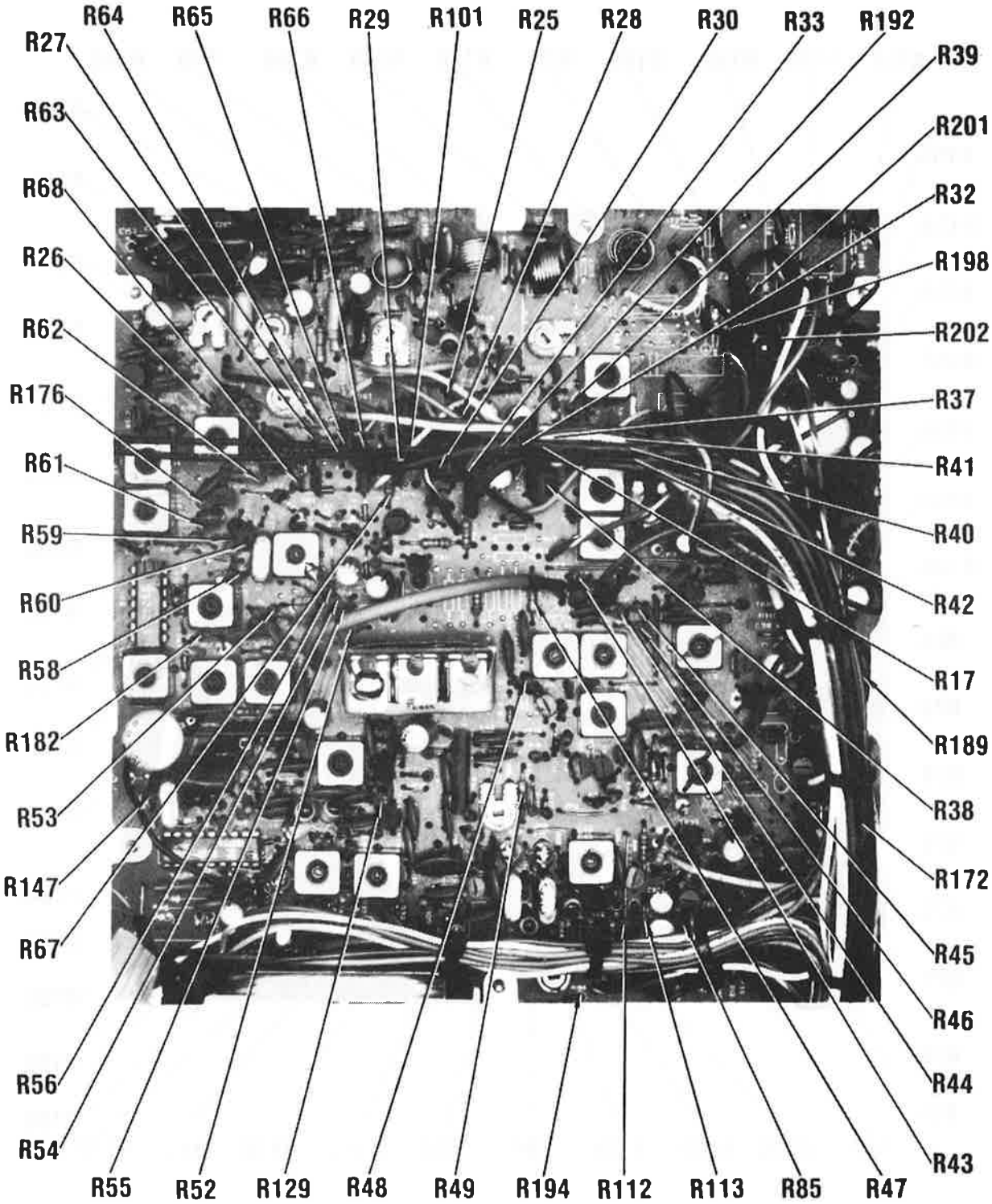
R64
R65
R66
R29
R101
R25
R28
R30
R33
R192
R27
R39
R63
R201
R68
R32
R26
R198
R62
R202
R176
R37
R61
R41
R59
R40
R60
R42
R58
R17
R182
R189
R53
R38
R147
R172
R67
R45
R46
R56
R44
R54
R43
R55
R52
R129
R48
R49
R194
R112
R113
R85
R47

MAIN BOARD

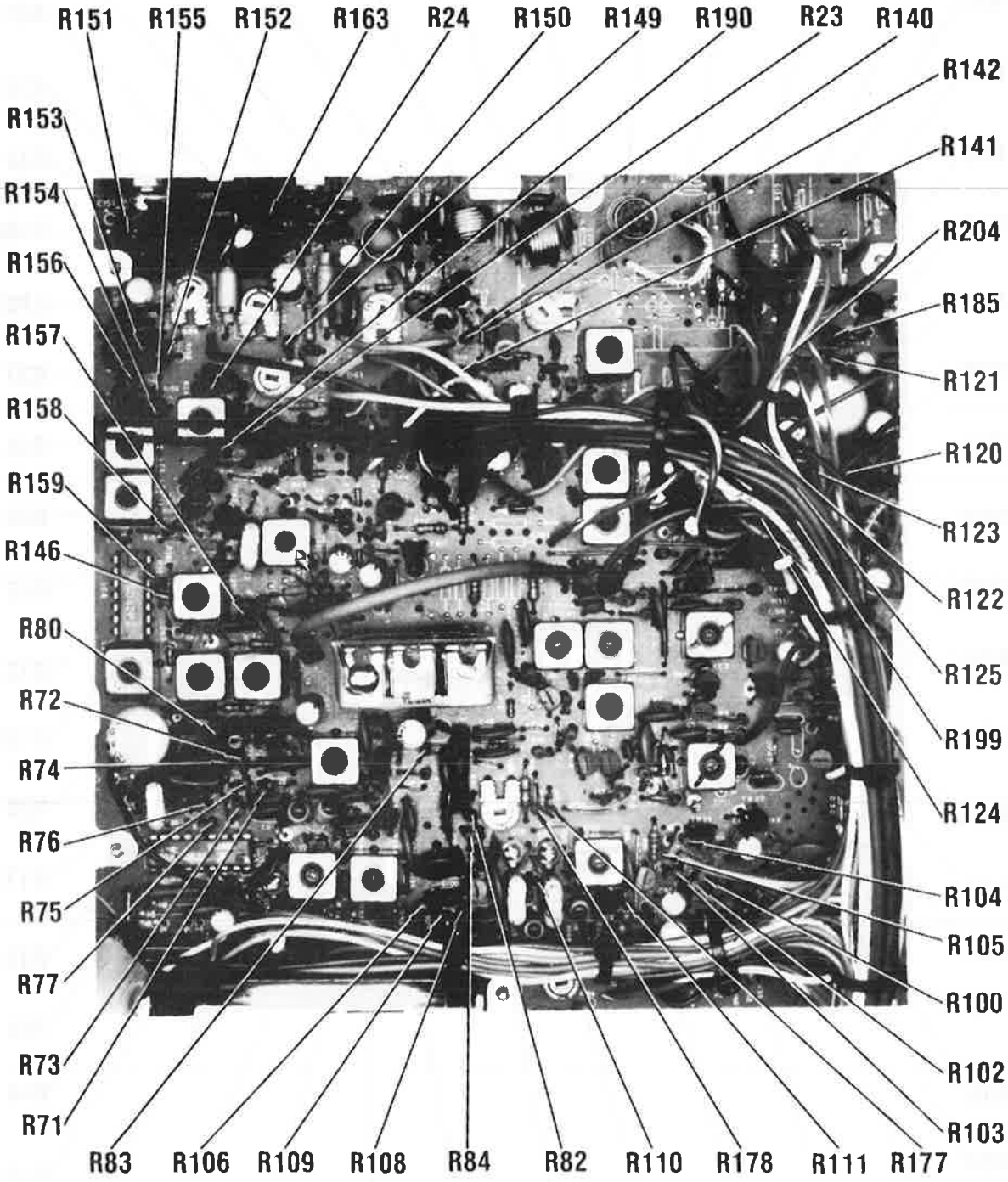
R151
R155
R152
R163
R24
R150
R149
R190
R23
R140
R142
R141
R204
R185
R121
R120
R123
R122
R125
R199
R124
R104
R105
R100
R102
R103
R177
R111
R178
R110
R82
R84
R108
R109
R106
R83
R71
R73
R77
R75
R76
R74
R72
R80
R146
R159
R158
R157
R156
R154
R153

MAIN BOARD

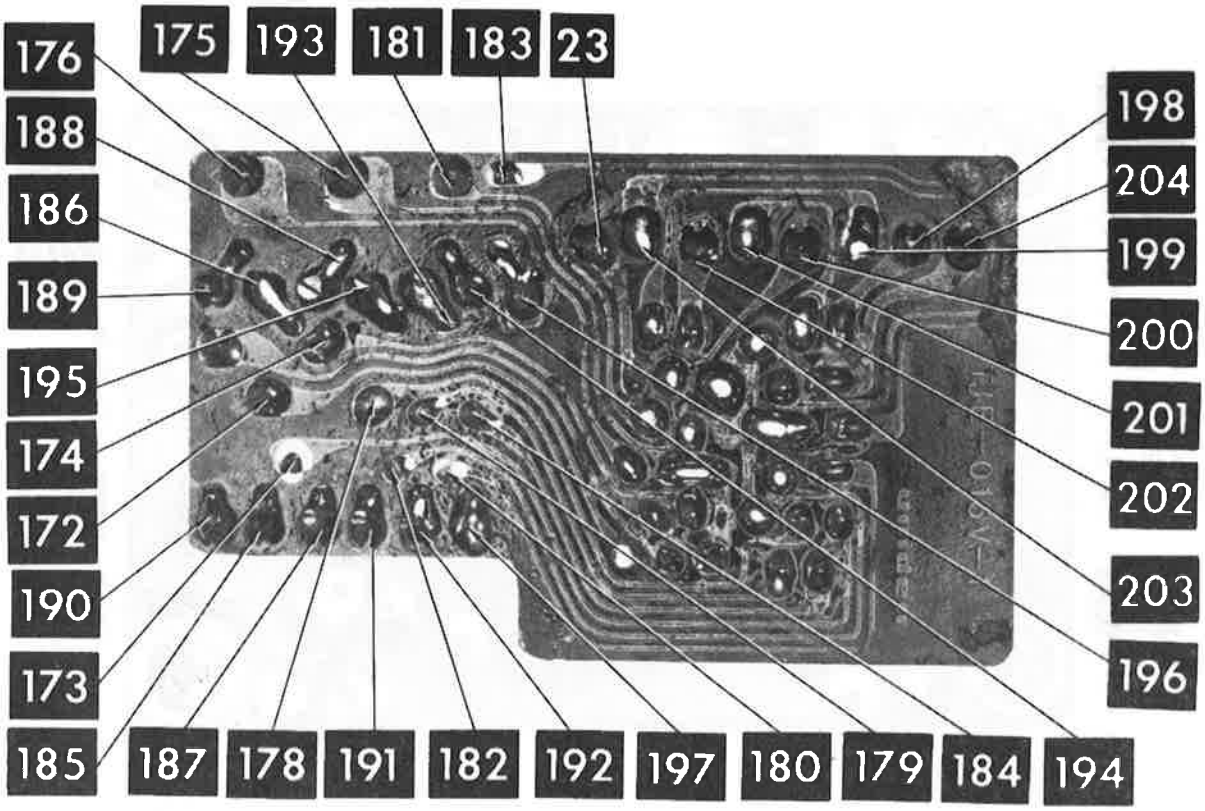

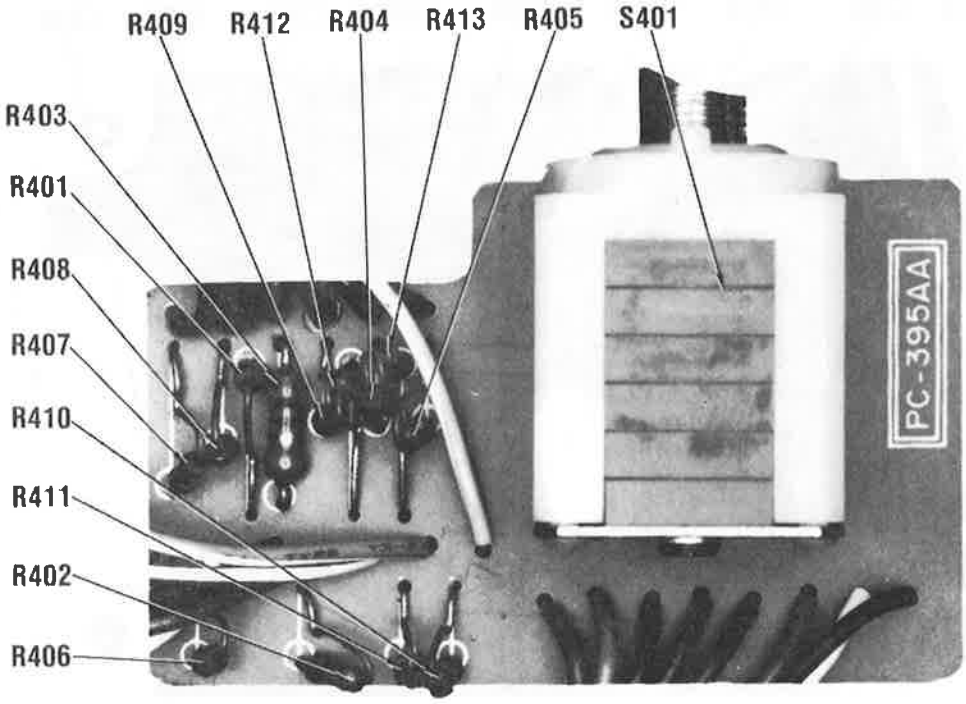

CHANNEL SELECTOR BOARD

A Howard W. Sams CIRCUITRACE® Photo

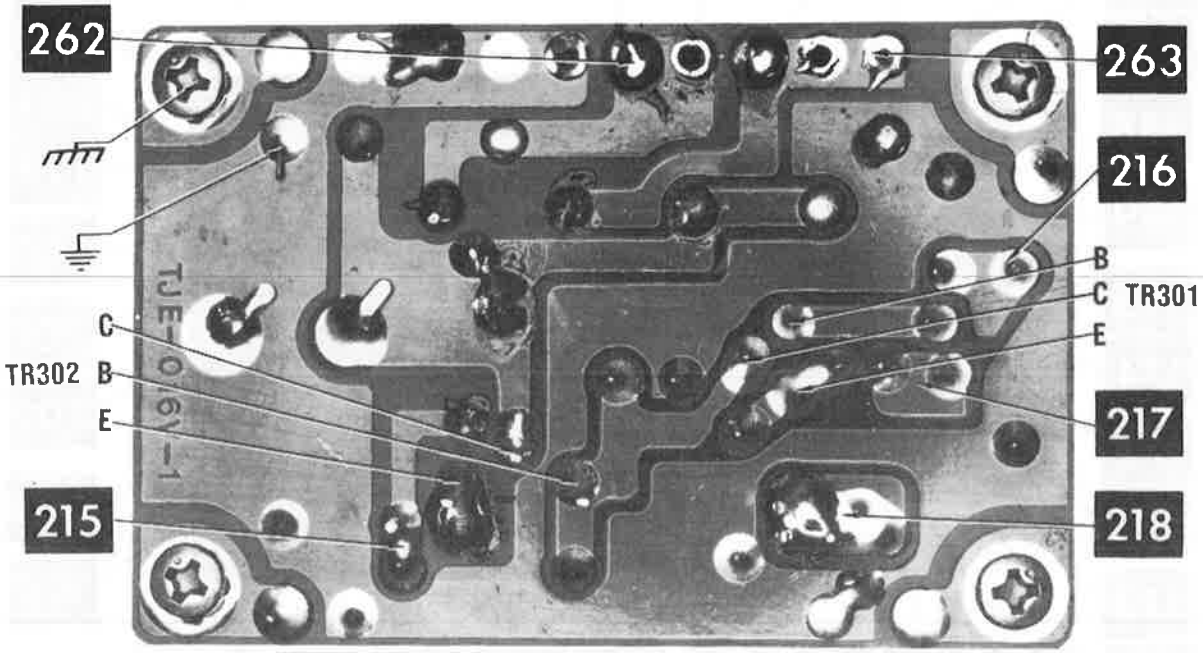

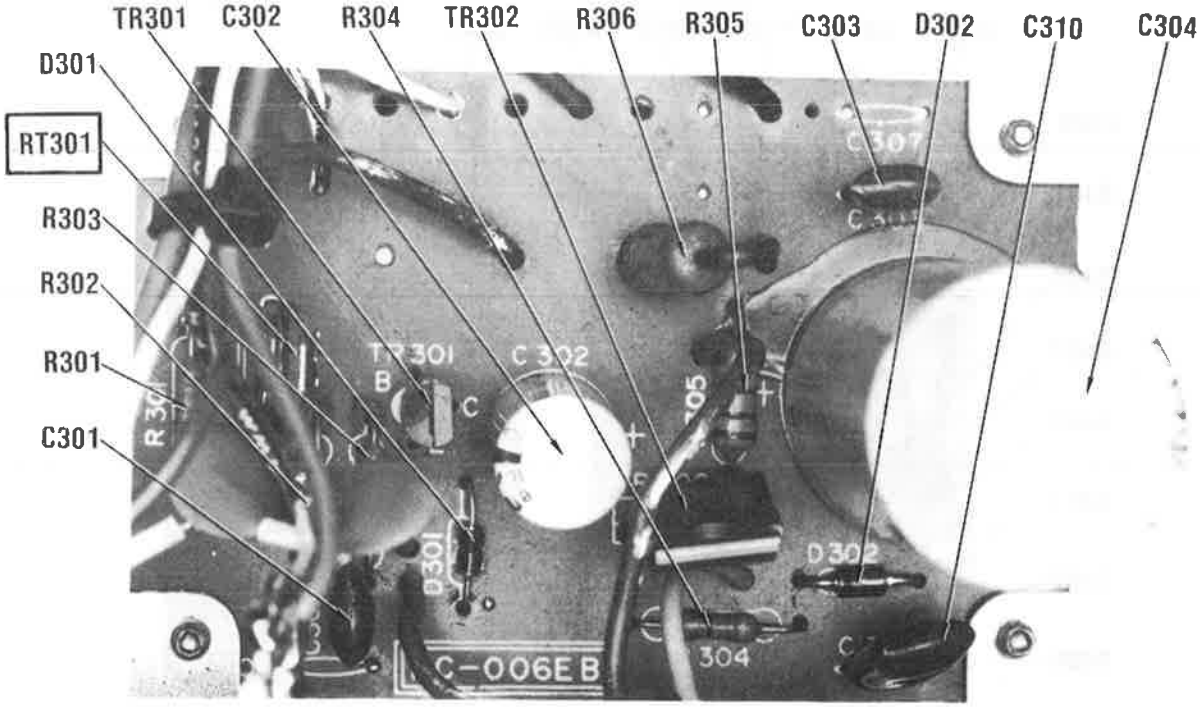

AC POWER BOARD

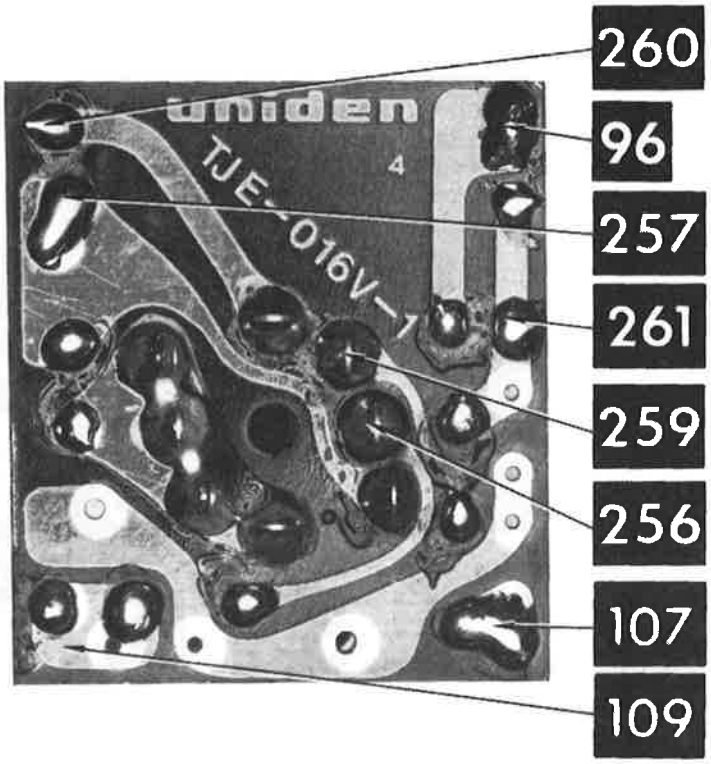

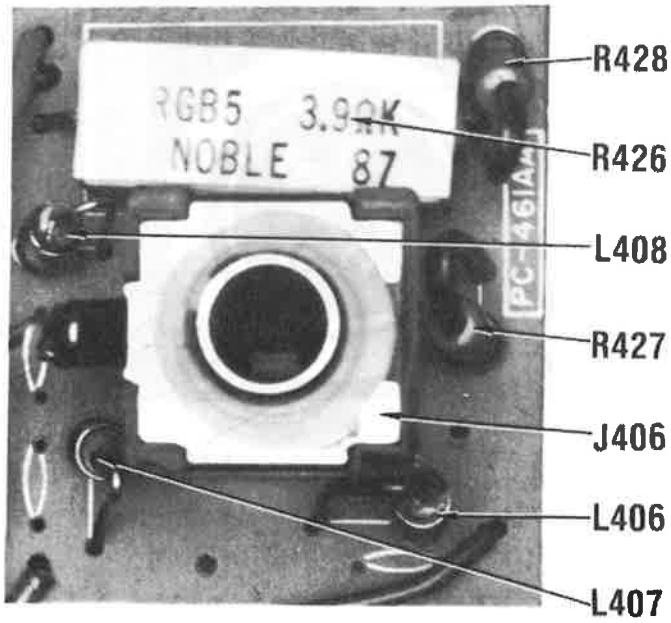

PHONE JACK BOARD

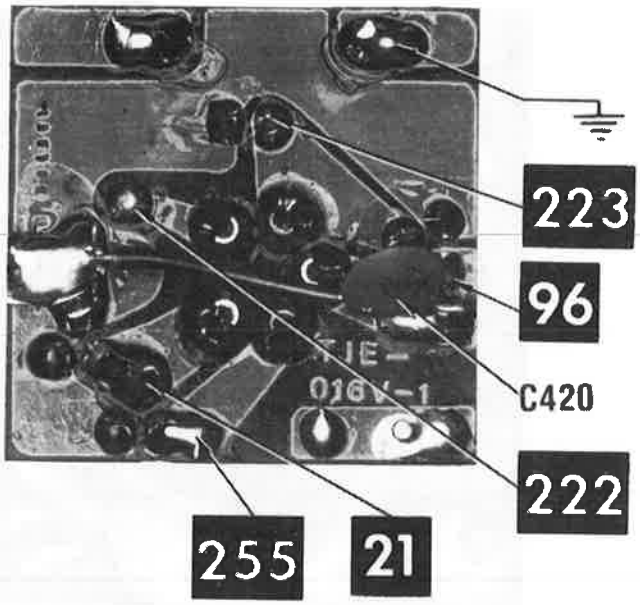

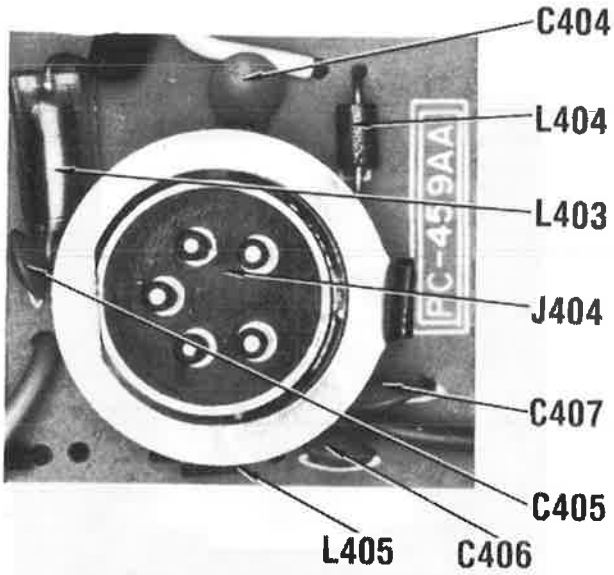

MIC JACK BOARD

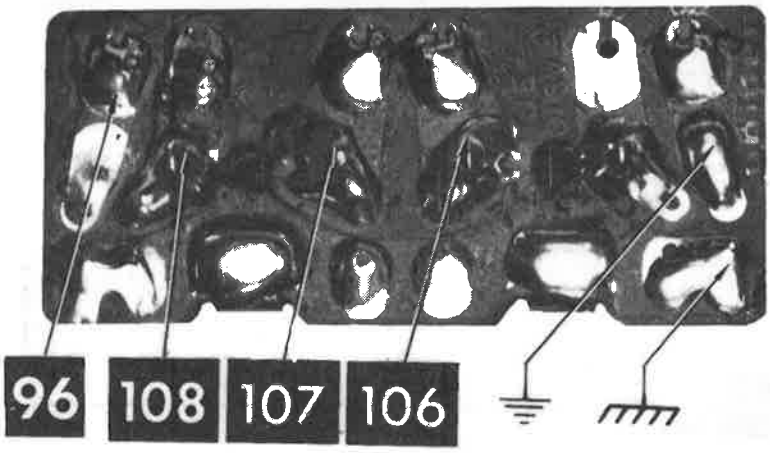

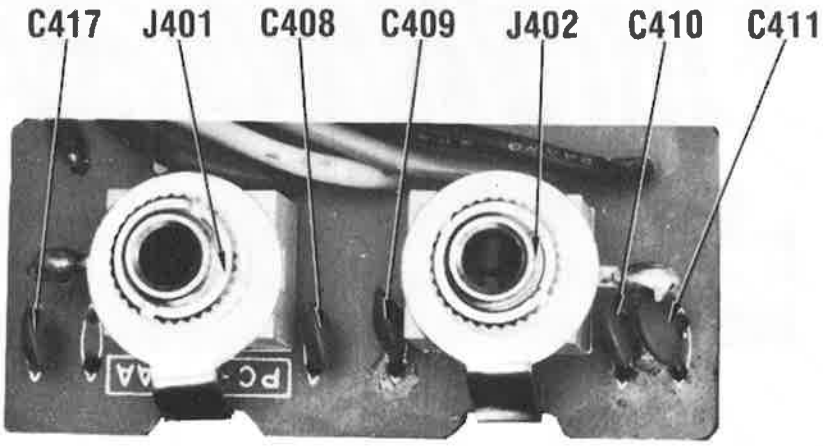

PA-EXT SPEAKER BOARD

A Howard W. Sams CIRCUITRACE® Photo

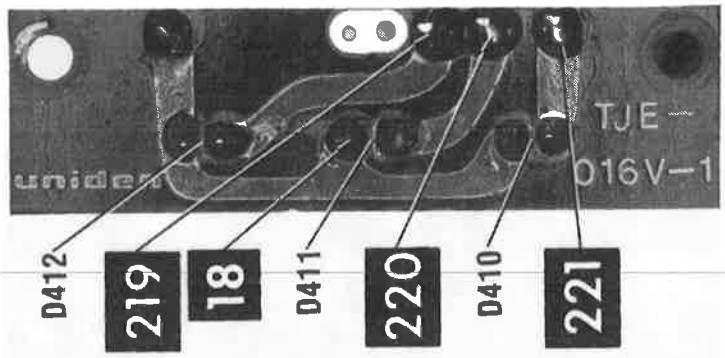

INDICATOR BOARD

A Howard W. Sams CIRCUITRACE® Photo

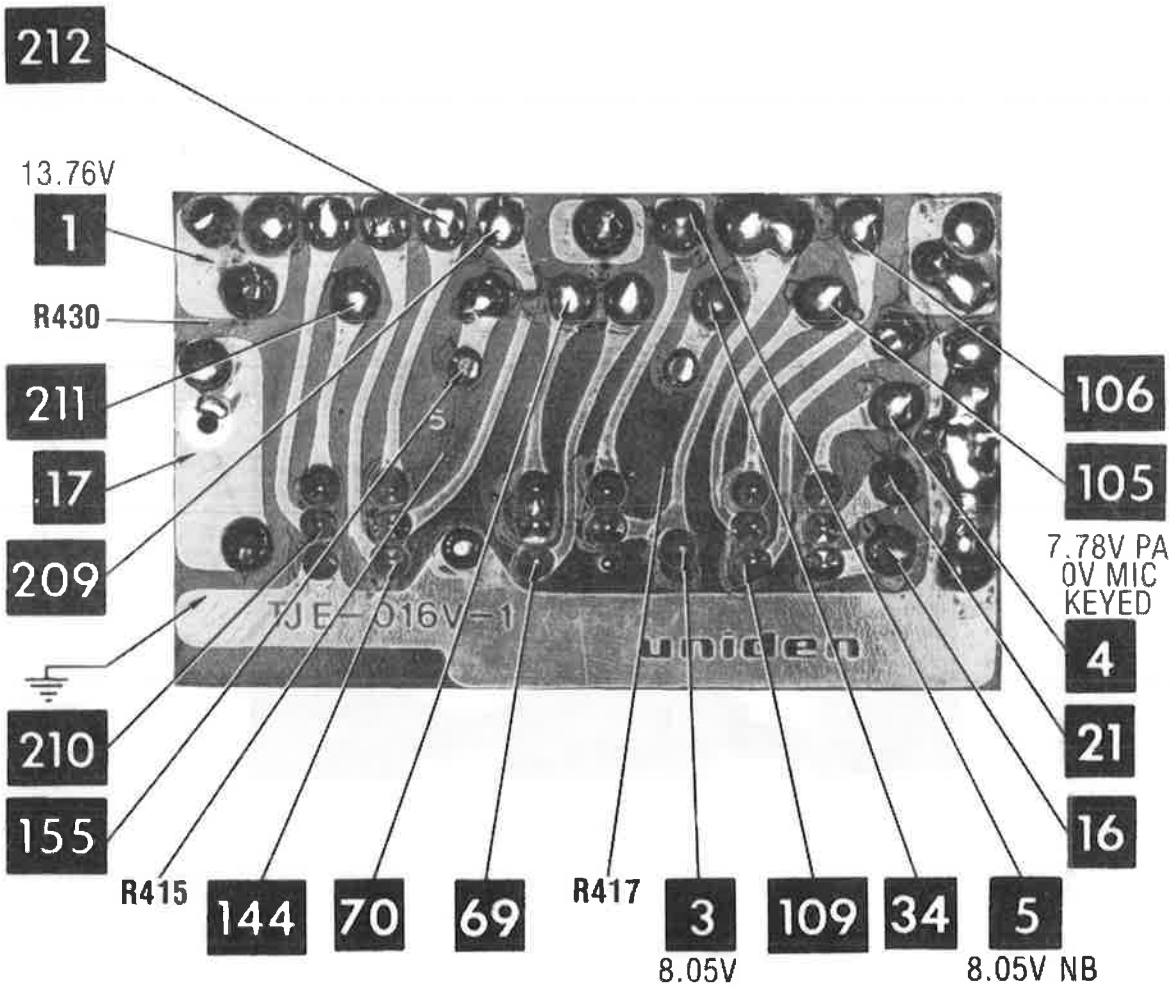

SWITCH BOARD

A Howard W. Sams CIRCUITRACE® Photo

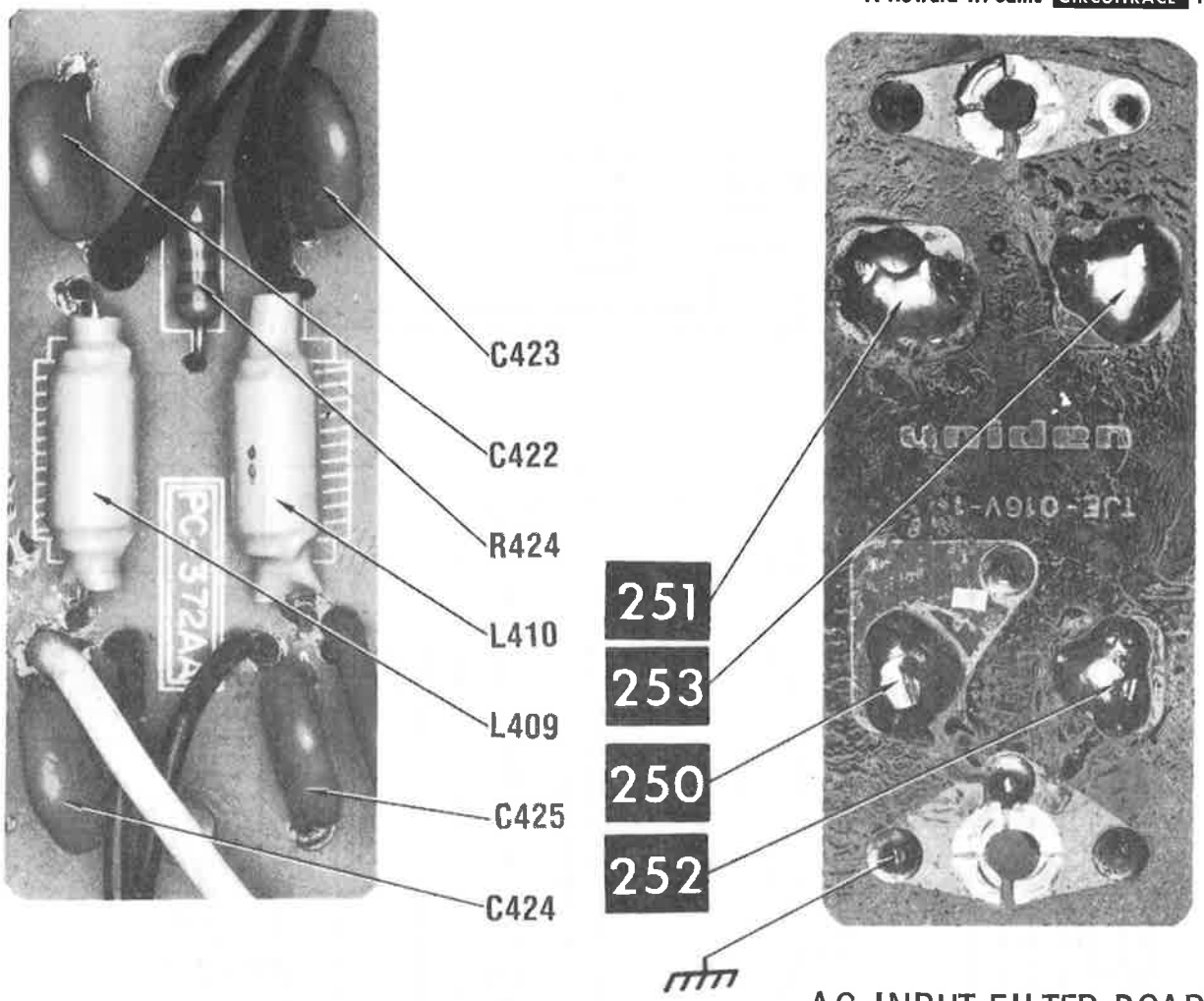

AC INPUT FILTER BOARD

A Howard W. Sams CIRCUITRACE® Photo

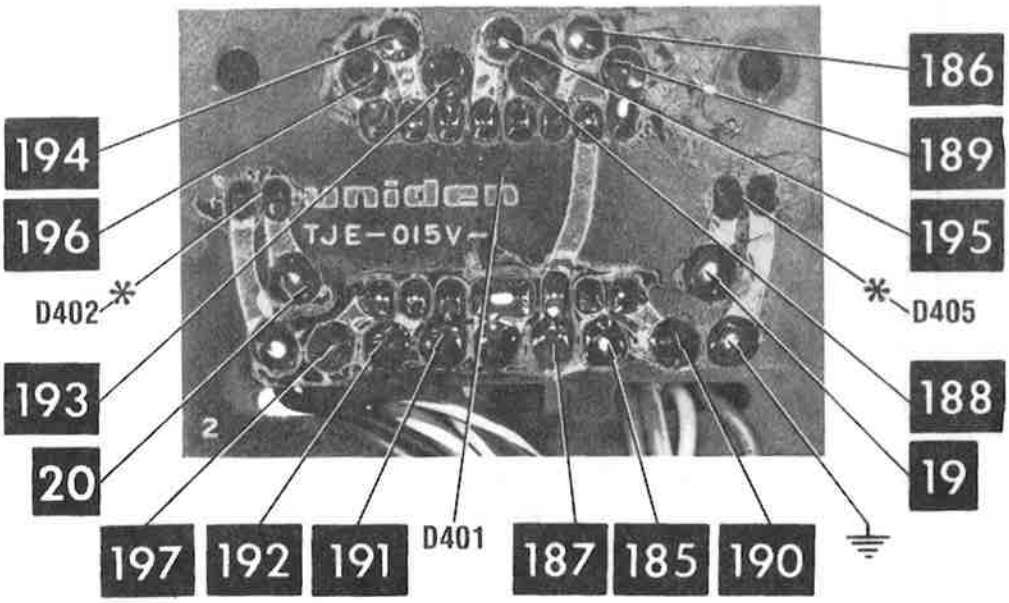

* LOCATED ON OTHER SIDE OF BOARD

CHANNEL READOUT BOARD

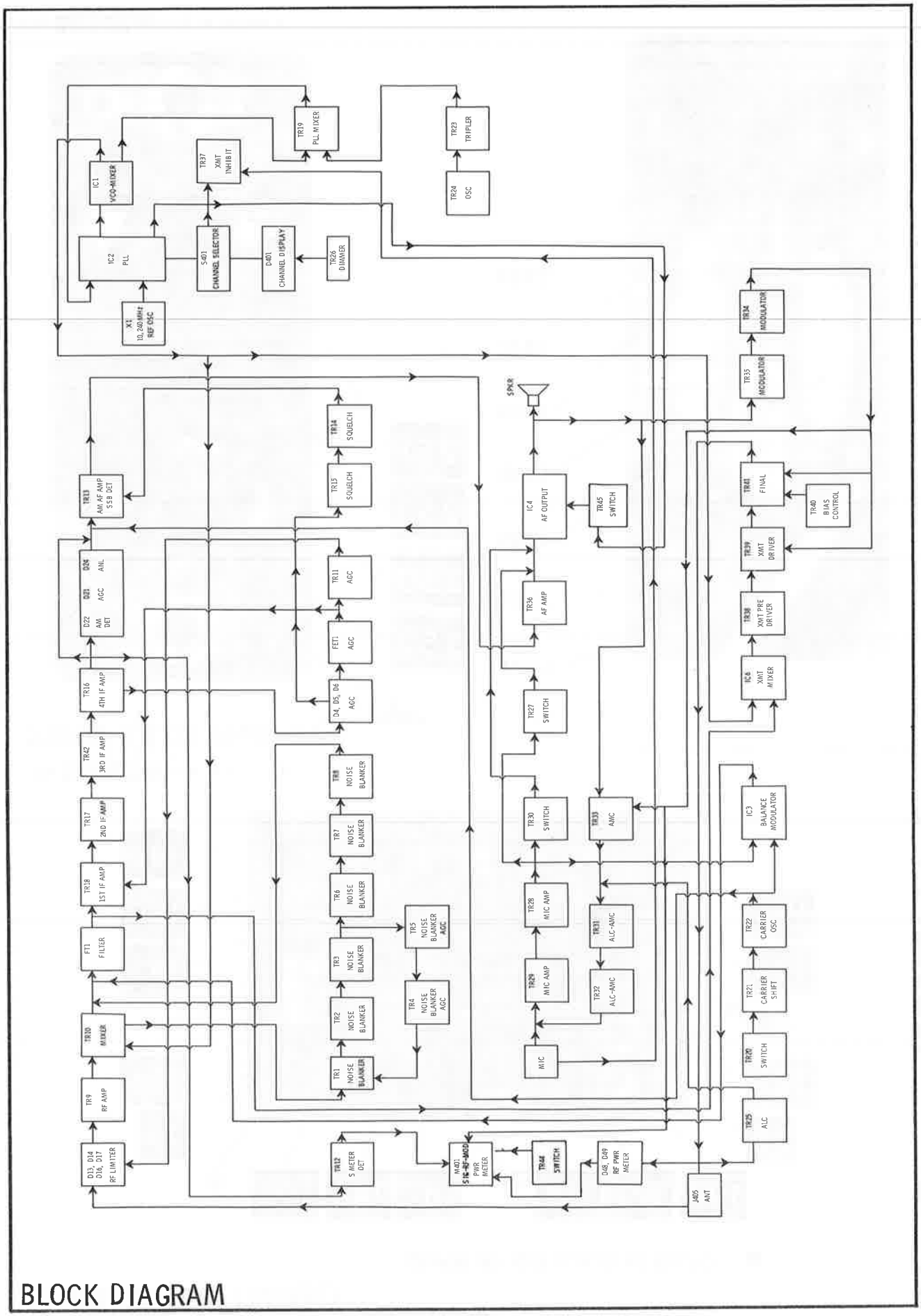

BLOCK DIAGRAM

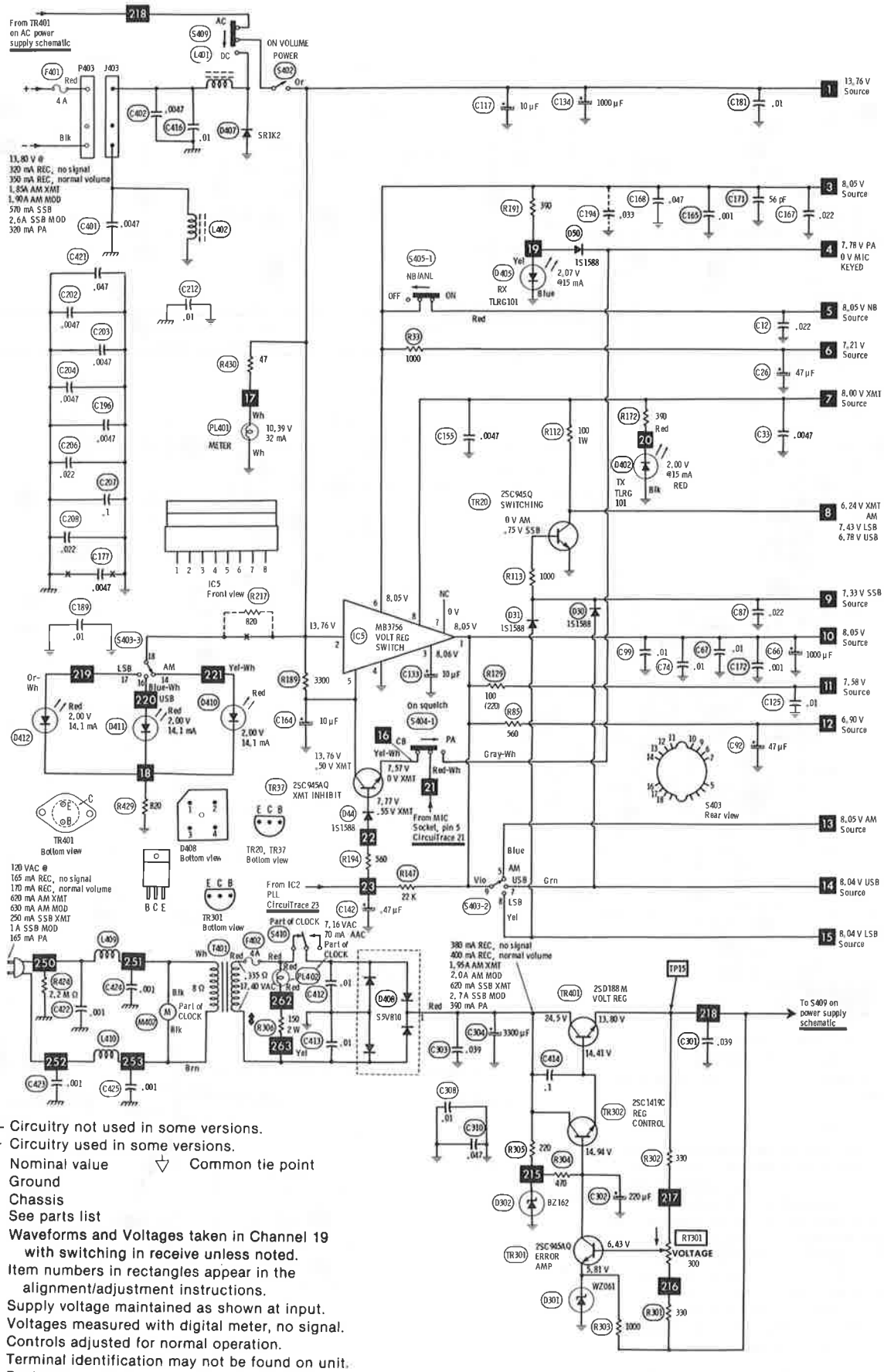

—✕— Circuitry not used in some versions.
- - - Circuitry used in some versions.
※ Nominal value
▽ Common tie point
⏚ Ground
Chassis
⊖ See parts list
Waveforms and Voltages taken in Channel 19 with switching in receive unless noted.
Item numbers in rectangles appear in the alignment/adjustment instructions.
Supply voltage maintained as shown at input.
Voltages measured with digital meter, no signal.
Controls adjusted for normal operation.
Terminal identification may not be found on unit.
Resistors are 1/2W or less, 5% unless noted.
Value in ( ) used in some versions.
Arrow head(s) at coils and transformers indicates accessibility of tuning slug(s).

Flame retardant resistor

POWER SUPPLY

A PHOTOFACT STANDARD NOTATION SCHEMATIC WITH CIRCUITRACE™

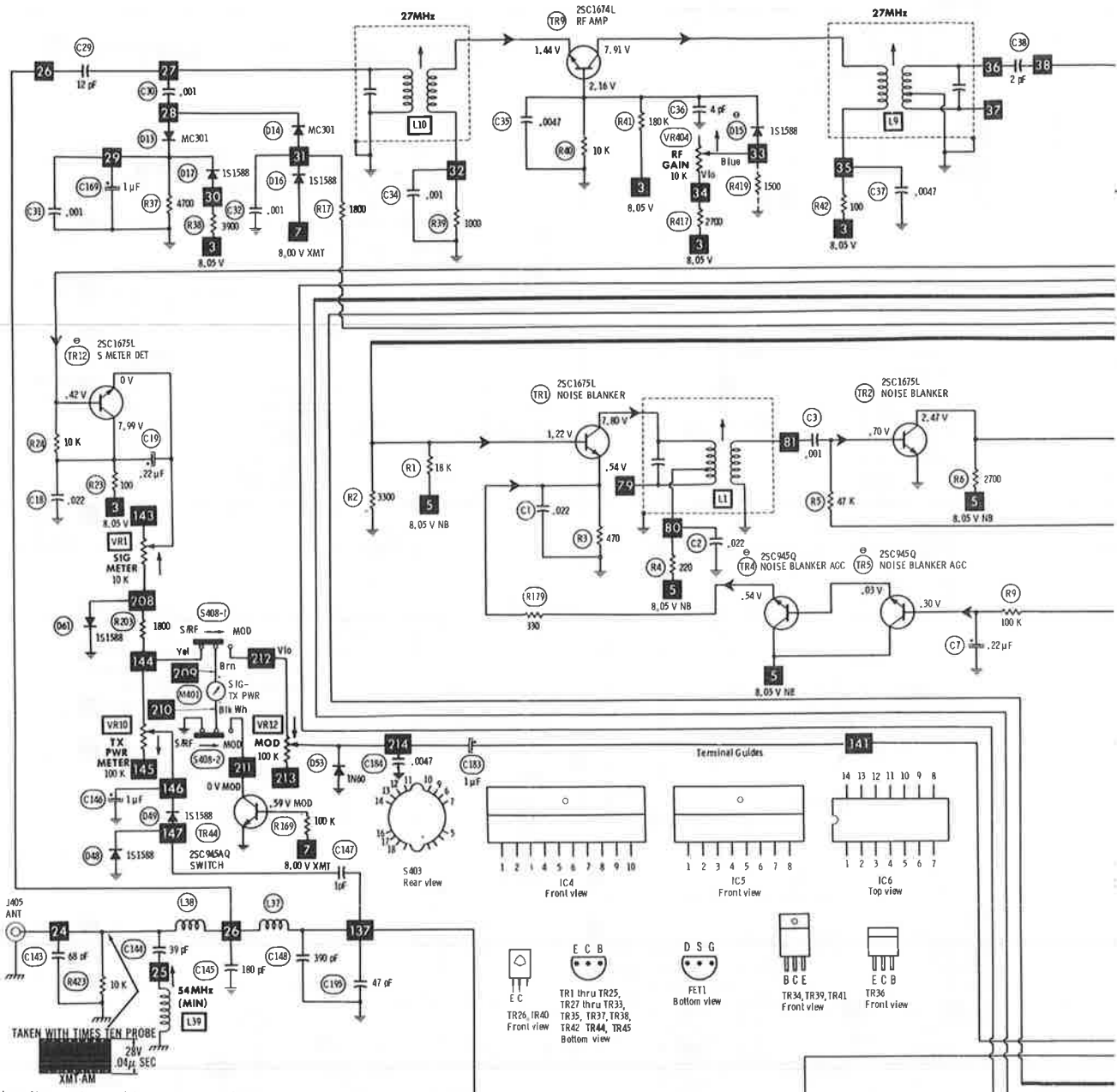

—✕— Circuitry not used in some versions.
- - - Circuitry used in some versions.
※ Nominal value ▽ Common tie point
⏚ Ground
Chassis
⊖ See parts list

Waveforms and Voltages taken in Channel 19 with switching in receive unless noted.
Item numbers in rectangles appear in the alignment/adjustment instructions.
Supply voltage maintained as shown at input.
Voltages measured with digital meter, no signal.
Controls adjusted for normal operation.
Terminal identification may not be found on unit.
Resistors are 1/2W or less, 5% unless noted.
Value in ( ) used in some versions.
Arrow head(s) at coils and transformers indicates accessibility of tuning slug(s).

A PHOTOFACT STANDARD NOTATION SCHEMATIC
WITH CIRCUITRACE™

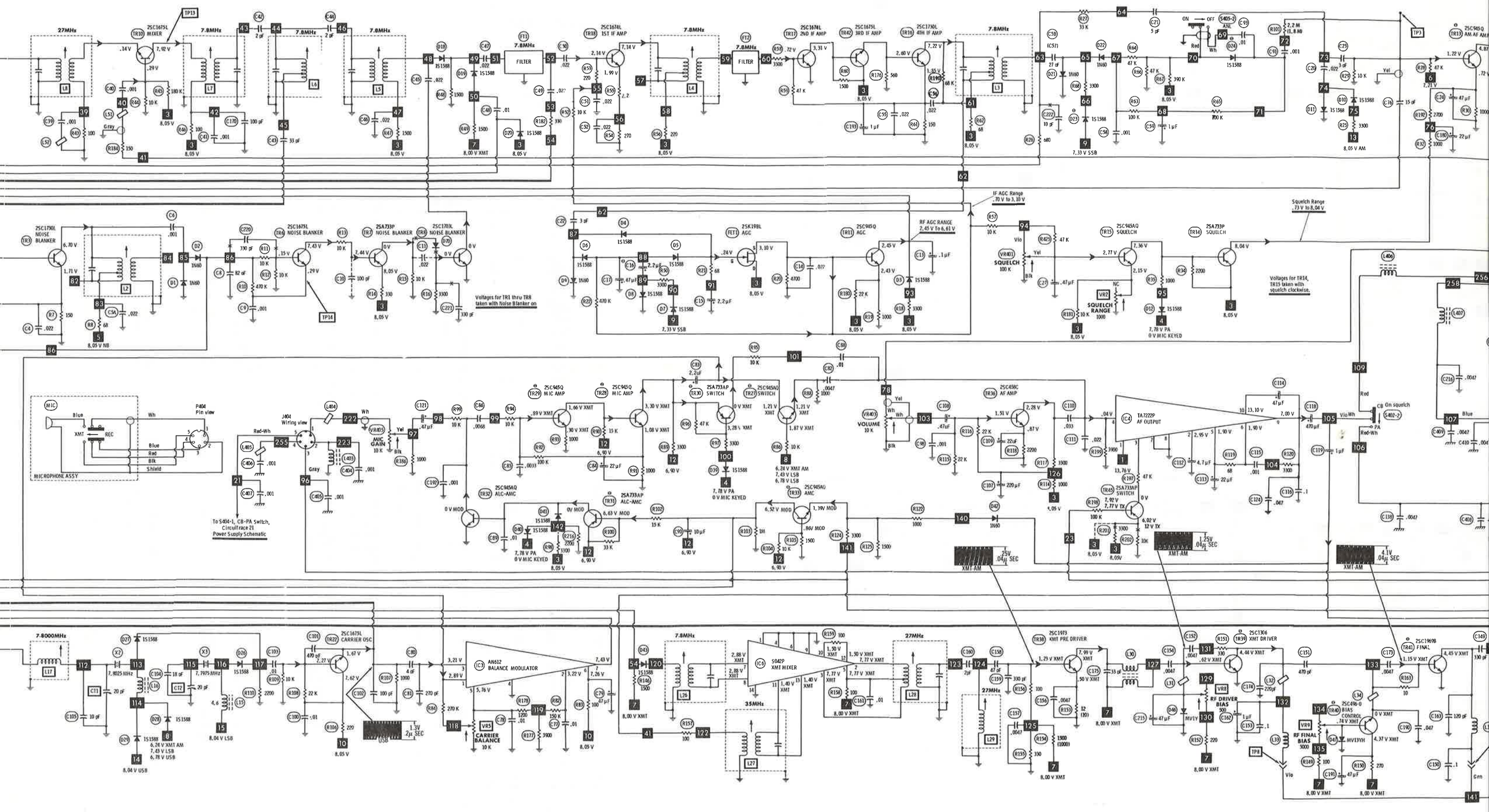

MAIN SCHEMATIC

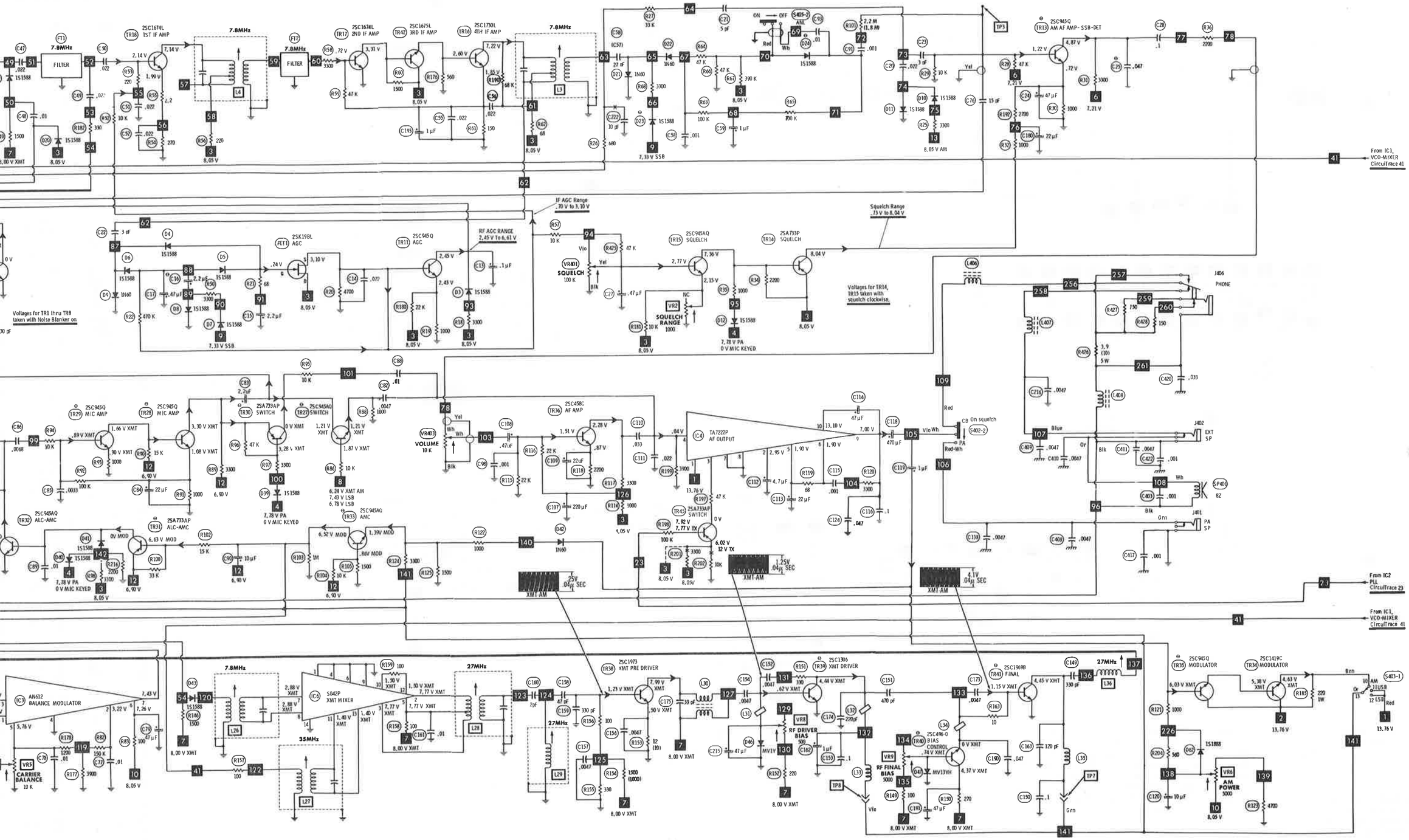

MAIN SCHEMATIC

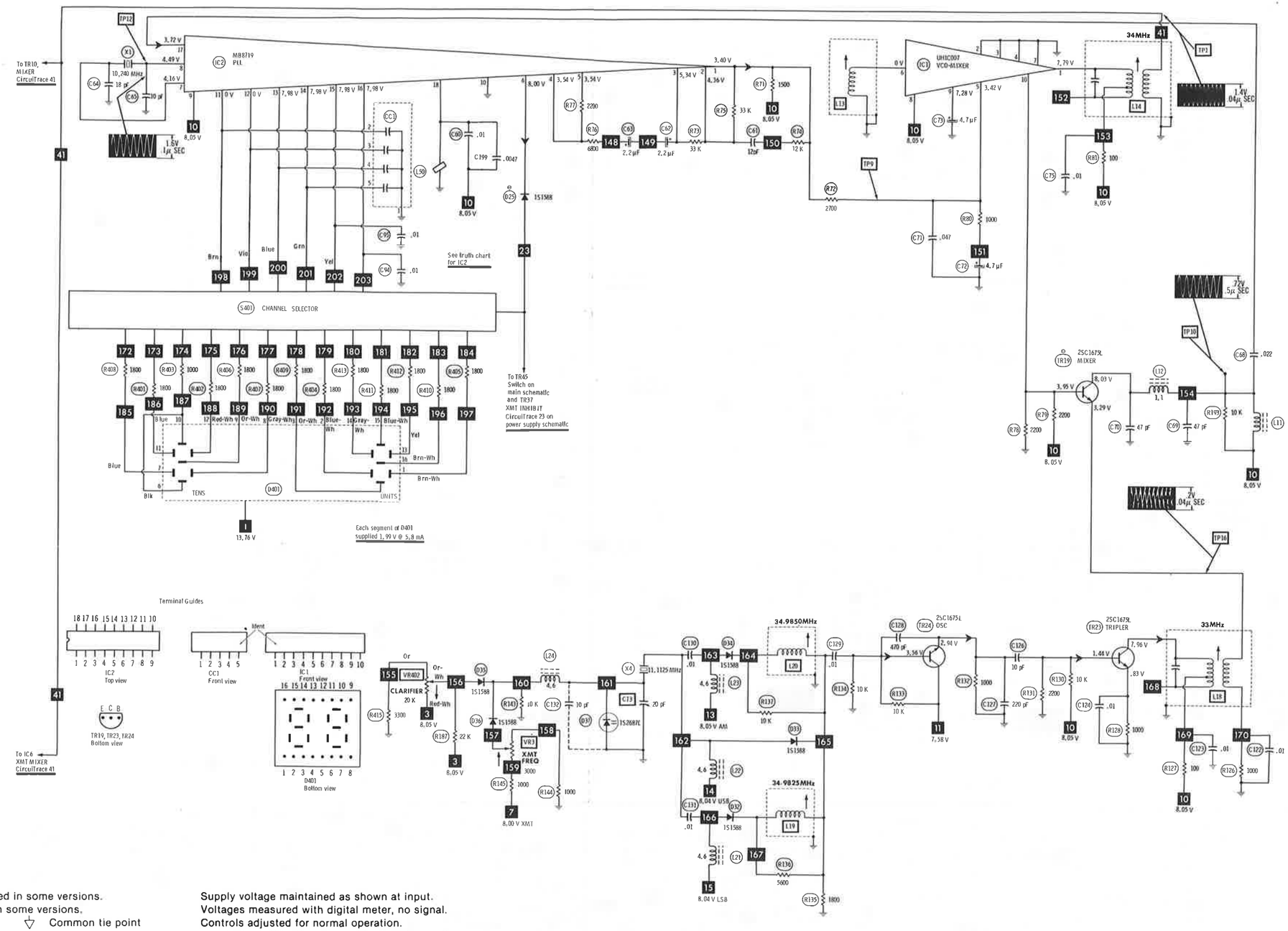

Circuitry not used in some versions.
Circuitry used in some versions.
Nominal value
Common tie point
Ground
Chassis
See parts list
Waveforms and Voltages taken in Channel 19 with switching in receive unless noted.
Item numbers in rectangles appear in the alignment/adjustment instructions.

Supply voltage maintained as shown at input.
Voltages measured with digital meter, no signal.
Controls adjusted for normal operation.
Terminal identification may not be found on unit.
Resistors are 1/2W or less, 5% unless noted.
Value in ( ) used in some versions.
Arrow head(s) at coils and transformers indicates accessibility of tuning slug(s).

A PHOTOFACT STANDARD NOTATION SCHEMATIC WITH CIRCUITRACE™

PLL SCHEMATIC

TEABERRY MODEL Stalker XV

PARTS LIST AND DES

(When ordering parts, state Model, F

WIRING DATA

Cable (Speaker)(Unsh	
Shielding Strap.....	
Hook-up Wire (Genera	
Hook-up Wire (Shielde	
Coax (Transmission L	
Microphone Cable (Co	
Microphone Cable (Co	
AC Power Cord.....	
AC Power Cord.....	

SEMICONDUCTORS (Sele

ITEM No.	TYPE No.	MFGR. PART No.	
D1	1N60	DDAY001004	
D2	1N60	DDAY001004	
D3	1S1588	DDAY047001	
D4	1S1588	DDAY047001	
D5	1S1588	DDAY047001	
D6	1S1588	DDAY047001	
D7	1S1588	DDAY047001	
D8	1S1588	DDAY047001	
D9	1N60	DDAY001004	
D10	1S1588	DDAY047001	
D11	1S1588	DDAY047001	
D12	1S1588	DDAY047001	
D13	MC301	DDAY090001	
D14	MC301	DDAY090001	
D15	1S1588	DDAY047001	
D16	1S1588	DDAY047001	
D17	1S1588	DDAY047001	
D18	1S1588	DDAY047001	
D19	1S1588	DDAY047001	
D20	1S1588	DDAY047001	
D21	1N60	DDAY001004	
D22	1N60	DDAY001004	
D23	1S1588	DDAY047001	
D24	1S1588	DDAY047001	
D25	1S1588	DDAY047001	
D26	1S1588	DDAY047001	
D27	1S1588	DDAY047001	
D28	1S1588	DDAY047001	
D29	1S1588	DDAY047001	
D30	1S1588	DDAY047001	
D31	1S1588	DDAY047001	
D32	1S1588	DDAY047001	
D33	1S1588	DDAY047001	
D34	1S1588	DDAY047001	
D35	1S1588	DDAY047001	
D36	1S1588	DDAY047001	
D37	1S2687D	DDAY067001	
D38	1S1588	DDAY047001	
D39	1S1588	DDAY047001	
D40	1S1588	DDAY047001	
D41	1S1588	DDAY047001	
D42	1N60	DDAY001004	
D43	1S1588	DDAY047001	
D44	1S1588	DDAY047001	
D46	MV1Y	DDFY020001	
D47	MV13YH	DDFY021001	
D48	1S1588	DDAY047001	
D49	1S1588	DDAY047001	
D50	1S1588	DDAY047001	
D53	1N60	DDAY001004	
D61	1S1588	DDAY047001	
D62	1S1588	DDAY047001	
D64	1S1588	DDAY047001	
D70	1S1588	DDAY047001	
D301	WZ061	DDAY008001	
D302	BZ162	DDAY009003	
D407	SR1K2	DDAY002002	
D408	S5VB10	DDAY066001	
FET1	2SK198L	DDCY001002	
IC1	UHIC-007	DDEY133001	
IC2	MB8719	DDEY101001	
IC3	AN612	DDEY130001	
IC4	TA7222P	DDEY146001	
IC5	MB3756	DDEY131001	
IC6	S042P	DDEY132001	
TR1	2SC1675L	DDBY259001	
TR2	2SC1675L	DDBY259001	
TR3	2SC1730L	DDBY269001	
TR4	2SC945Q		
	2SC945AQ	DDBY224003	

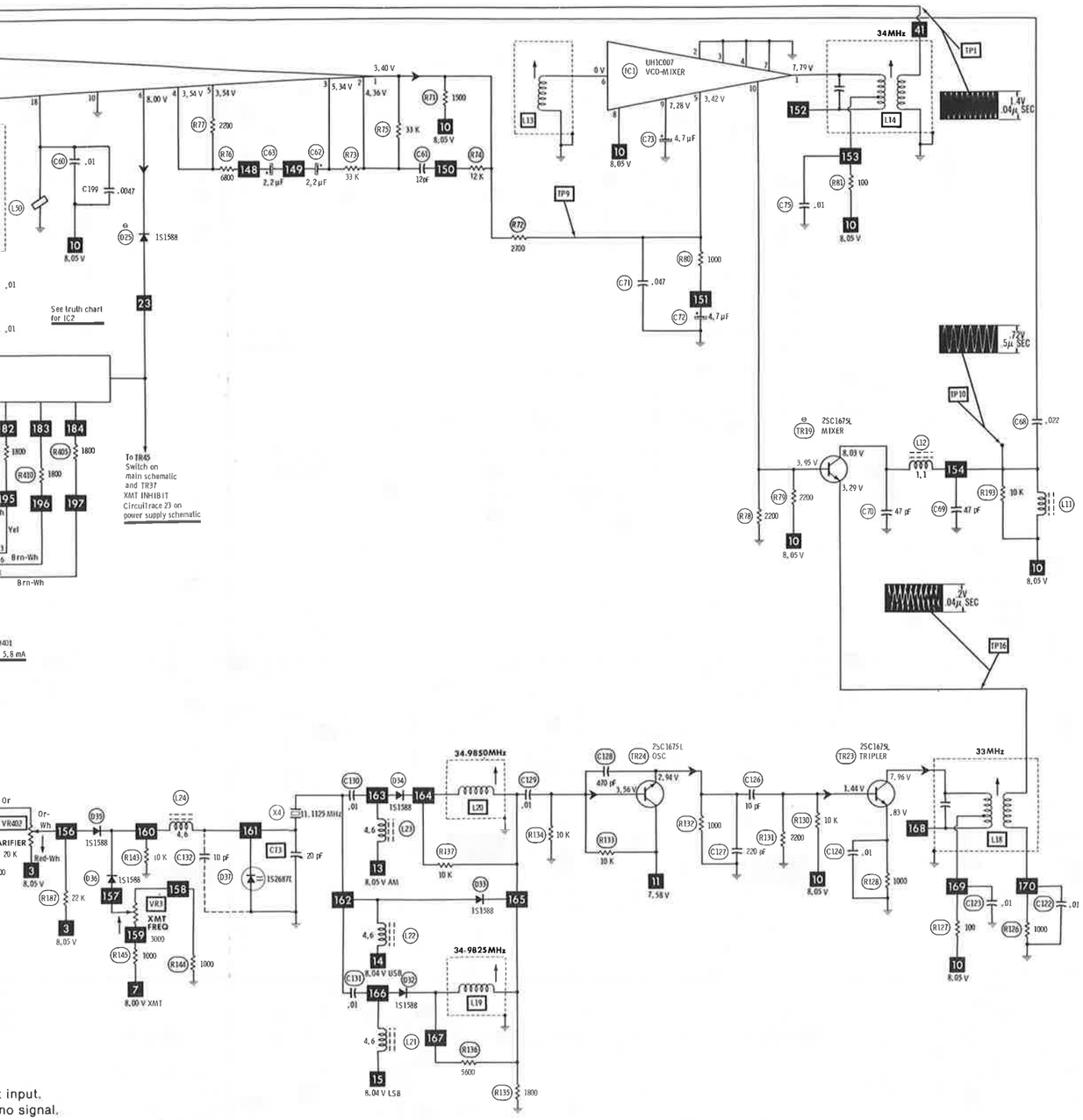

PLL SCHEMATIC

TEABERRY MODEL Stalker XV

PARTS LIST AND DESCRIPTION

(When ordering parts, state Model, Part Number, and Description.)

WIRING DATA

Cable (Speaker)(Unshielded).....	Use BELDEN No. 8782 (AWG24)(4 colors)
Shielding Strap.....	Use BELDEN No. 8660 (3/16" width)
Hook-up Wire (General Use).....	Use BELDEN No. 8524 (AWG22)(13 colors)
Hook-up Wire (Shielded).....	Use BELDEN No. 8401 (Braided Shield)(1 conductor)(AWG25)
	Use BELDEN No. 8421 (Spiral Shield)(1 conductor)(AWG25)
	Use BELDEN No. 8737 (Spiral Shield)(2 conductor)(AWG22)
Coax (Transmission Line).....	Use BELDEN No. 8216 (RG-174/U, 50 ohms)
Microphone Cable (Coiled).....	Use BELDEN No. 8491 (4 conductor-2 shielded)(6 ft.)(AWG23)
Microphone Cable (Coiled).....	Use BELDEN No. 9467 (5 conductor-1 shielded)(6 ft.)(AWG28)
AC Power Cord.....	Use BELDEN No. 17106 (6 ft.)(2 conductors)
AC Power Cord.....	Use BELDEN No. 17109 (9 ft.)(2 conductors)

SEMICONDUCTORS (Select replacement transistor for best results)

ITEM No.	TYPE No.	MFGR. PART No.	REPLACEMENT DATA							
			GENERAL ELECTRIC PART No.	MALLORY PART No.	RAYTHEON PART No.	RCA PART No.	SYLVANIA PART No.	THORDARSON PART No.	WORKMAN PART No.	ZENITH PART No.
D1	1N60	DDAY001004	1N60	PTC206	REN 109	SK3088	ECG109	TM109/**	WEP134/109	103-Z9001
D2	1N60	DDAY001004	1N60	PTC206	REN 109	SK3088	ECG109	TM109/**	WEP134/109	103-Z9001
D3	1S1588	DDAY047001	GE-514	PTC214	REN 177	SK3100/519	ECG519	TM519	WEP925/519	103-131
D4	1S1588	DDAY047001	GE-514	PTC214	REN 177	SK3100/519	ECG519	TM519	WEP925/519	103-131
D5	1S1588	DDAY047001	GE-514	PTC214	REN 177	SK3100/519	ECG519	TM519	WEP925/519	103-131
D6	1S1588	DDAY047001	GE-514	PTC214	REN 177	SK3100/519	ECG519	TM519	WEP925/519	103-131
D7	1S1588	DDAY047001	GE-514	PTC214	REN 177	SK3100/519	ECG519	TM519	WEP925/519	103-131
D8	1S1588	DDAY047001	GE-514	PTC214	REN 177	SK3100/519	ECG519	TM519	WEP925/519	103-131
D9	1N60	DDAY001004	1N60	PTC206	REN 109	SK3088	ECG109	TM109/**	WEP134/109	103-Z9001
D10	1S1588	DDAY047001	GE-514	PTC214	REN 177	SK3100/519	ECG519	TM519	WEP925/519	103-131
D11	1S1588	DDAY047001	GE-514	PTC214	REN 177	SK3100/519	ECG519	TM519	WEP925/519	103-131
D12	1S1588	DDAY047001	GE-514	PTC214	REN 177	SK3100/519	ECG519	TM519	WEP925/519	103-131
D13	MC301	DDAY090001	GE-300	PTC214	REN 177	SK3175/177	ECG177	TM177	WEP1062/177	103-131
D14	MC301	DDAY090001	GE-300	PTC214	REN 177	SK3175/177	ECG177	TM177	WEP1062/177	103-131
D15	1S1588	DDAY047001	GE-514	PTC214	REN 177	SK3100/519	ECG519	TM519	WEP925/519	103-131
D16	1S1588	DDAY047001	GE-514	PTC214	REN 177	SK3100/519	ECG519	TM519	WEP925/519	103-131
D17	1S1588	DDAY047001	GE-514	PTC214	REN 177	SK3100/519	ECG519	TM519	WEP925/519	103-131
D18	1S1588	DDAY047001	GE-514	PTC214	REN 177	SK3100/519	ECG519	TM519	WEP925/519	103-131
D19	1S1588	DDAY047001	GE-514	PTC214	REN 177	SK3100/519	ECG519	TM519	WEP925/519	103-131
D20	1S1588	DDAY047001	GE-514	PTC214	REN 177	SK3100/519	ECG519	TM519	WEP925/519	103-131
D21	1N60	DDAY001004	1N60	PTC206	REN 109	SK3088	ECG109	TM109/**	WEP134/109	103-Z9001
D22	1N60	DDAY001004	1N60	PTC206	REN 109	SK3088	ECG109	TM109/**	WEP134/109	103-Z9001
D23	1S1588	DDAY047001	GE-514	PTC214	REN 177	SK3100/519	ECG519	TM519	WEP925/519	103-131
D24	1S1588	DDAY047001	GE-514	PTC214	REN 177	SK3100/519	ECG519	TM519	WEP925/519	103-131
D25	1S1588	DDAY047001	GE-514	PTC214	REN 177	SK3100/519	ECG519	TM519	WEP925/519	103-131
D26	1S1588	DDAY047001	GE-514	PTC214	REN 177	SK3100/519	ECG519	TM519	WEP925/519	103-131
D27	1S1588	DDAY047001	GE-514	PTC214	REN 177	SK3100/519	ECG519	TM519	WEP925/519	103-131
D28	1S1588	DDAY047001	GE-514	PTC214	REN 177	SK3100/519	ECG519	TM519	WEP925/519	103-131
D29	1S1588	DDAY047001	GE-514	PTC214	REN 177	SK3100/519	ECG519	TM519	WEP925/519	103-131
D30	1S1588	DDAY047001	GE-514	PTC214	REN 177	SK3100/519	ECG519	TM519	WEP925/519	103-131
D31	1S1588	DDAY047001	GE-514	PTC214	REN 177	SK3100/519	ECG519	TM519	WEP925/519	103-131
D32	1S1588	DDAY047001	GE-514	PTC214	REN 177	SK3100/519	ECG519	TM519	WEP925/519	103-131
D33	1S1588	DDAY047001	GE-514	PTC214	REN 177	SK3100/519	ECG519	TM519	WEP925/519	103-131
D34	1S1588	DDAY047001	GE-514	PTC214	REN 177	SK3100/519	ECG519	TM519	WEP925/519	103-131
D35	1S1588	DDAY047001	GE-514	PTC214	REN 177	SK3100/519	ECG519	TM519	WEP925/519	103-131
D36	1S1588	DDAY047001	GE-514	PTC214	REN 177	SK3100/519	ECG519	TM519	WEP925/519	103-131
D37	1S2687D	DDAY067001			REN 612	SK3325/612	ECG612	TM612		103-176
D38	1S1588	DDAY047001	GE-514	PTC214	REN 177	SK3100/519	ECG519	TM519	WEP925/519	103-131
D39	1S1588	DDAY047001	GE-514	PTC214	REN 177	SK3100/519	ECG519	TM519	WEP925/519	103-131
D40	1S1588	DDAY047001	GE-514	PTC214	REN 177	SK3100/519	ECG519	TM519	WEP925/519	103-131
D41	1S1588	DDAY047001	GE-514	PTC214	REN 177	SK3100/519	ECG519	TM519	WEP925/519	103-131
D42	1N60	DDAY001004	1N60	PTC206	REN 109	SK3088	ECG109	TM109/**	WEP134/109	103-Z9001
D43	1S1588	DDAY047001	GE-514	PTC214	REN 177	SK3100/519	ECG519	TM519	WEP925/519	103-131
D44	1S1588	DDAY047001	GE-514	PTC214	REN 177	SK3100/519	ECG519	TM519	WEP925/519	103-131
D46	MV1Y	DDFY020001		PTC301	REN 601	SK3463/601	ECG601	TM601		
D47	MV13YH	DDFY021001		PTC302		SK3864/605	ECG605	TM605		
D48	1S1588	DDAY047001	GE-514	PTC214	REN 177	SK3100/519	ECG519	TM519	WEP925/519	103-131
D49	1S1588	DDAY047001	GE-514	PTC214	REN 177	SK3100/519	ECG519	TM519	WEP925/519	103-131
D50	1S1588	DDAY047001	GE-514	PTC214	REN 177	SK3100/519	ECG519	TM519	WEP925/519	103-131
D53	1N60	DDAY001004	1N60	PTC206	REN 109	SK3088	ECG109	TM109/**	WEP134/109	103-Z9001
D61	1S1588	DDAY047001	GE-514	PTC214	REN 177	SK3100/519	ECG519	TM519	WEP925/519	103-131
D62	1S1588	DDAY047001	GE-514	PTC214	REN 177	SK3100/519	ECG519	TM519	WEP925/519	103-131
D64	1S1588	DDAY047001	GE-514	PTC214	REN 177	SK3100/519	ECG519	TM519	WEP925/519	103-131
D70	1S1588	DDAY047001	GE-514	PTC214	REN 177	SK3100/519	ECG519	TM519	WEP925/519	103-131
D301	WZ061	DDAY008001	GEZD-6.2	ZB6.2B	REN 137	SK3058/137A	ECG137A	TM137A/**	WEP1154/137A	103-Z9008
D302	BZ162	DDAY009003	GEZD-16	ZB16B	REN 5075	SK3751/5075A	ECG5075A	TM5075A/**	WEP1160/5075A	103-Z9013
D407	SR1K2	DDAY002002	GE-504A	PTC201	REN 116	SK3311	ECG116	TM116	WEP156	212-76-02
D408	S5VB10	DDAY066001	GEBR-206	PTC204(4)	REN 156(4)	SK3051/156(4)	ECG5313	TM156(4)	WEP1044	212-Z9000(4)
FET1	2SK19BL	DDCY001002	GE-FET-2	PTC161	REN 132*	SK3834/132	ECG312*	TM312*	WEP920/312*	921-1067*
IC1	UHIC-007	DDEY133001					ECG1262	TM1262		
IC2	MB8719	DDEY101001								
IC3	AN612	DDEY130001					ECG1249	TM1249		221-Z9068
IC4	TA7222P	DDEY146001				SK3726				
IC5	MB3756	DDEY131001					ECG1271	TM1271		
IC6	S042P	DDEY132001								
TR1	2SC1675L	DDBY259001	GE-213	PTC132*	REN 229*	SK3122	ECG229*	TM229*	WEP773	121-Z9021*
TR2	2SC1675L	DDBY259001	GE-213	PTC132*	REN 229*	SK3122	ECG229*	TM229*	WEP773	121-Z9021*
TR3	2SC1730L	DDBY269001	GE-17*	PTC136*	REN 107	SK3293/107	ECG316*	TM316*	WEP535/107	121-Z9093
TR4	2SC945Q		GE-212	PTC121*	REN 199	SK3124/289	ECG199	TM199/**	WEP1945	121-972*
	2SC945AQ	DDBY224003	GE-212	PTC121*	REN 199	SK3124/289	ECG199	TM199/**	WEP1945	121-972*

PARTS LIST AND DESCRIPTION (CONTINUED)

(When ordering parts, state Model, Part Number, and Description.)

SEMICONDUCTORS (Select replacement transistor for best results) (cont)

ITEM No.	TYPE No.	MFGR. PART No.	REPLACEMENT DATA							
			GENERAL ELECTRIC PART No.	MALLORY PART No.	RAYTHEON PART No.	RCA PART No.	SYLVANIA PART No.	THORDARSON PART No.	WORKMAN PART No.	ZENITH PART No.
TR5	2SC945Q		GE-212	PTC121*	REN 199	SK3124/289	ECG199	TM199/**	WEP1945	121-972*
	2SC945AQ	DDBY224003	GE-212	PTC121*	REN 199	SK3124/289	ECG199	TM199/**	WEP1945	121-972*
TR6	2SC1675L	DDBY259001	GE-213	PTC132*	REN 229*	SK3122	ECG229*	TM229*	WEP773	121-Z9021*
TR7	2SA733P	DDBY003001	GE-48	PTC127	REN 294	SK3114/290	ECG290	TM290/**	WEP911/290	121-Z9067
TR8	2SC1730L	DDBY269001	GE-17*	PTC136*	REN 107	SK3293/107	ECG316*	TM316*	WEP535/107	121-Z9093
	2SC945AQ	DDBY224003	GE-212	PTC121*	REN 199	SK3124/289	ECG199	TM199/**	WEP1945	121-972*
TR9	2SC1674L	DDBY295002	GE-61*	PTC132*	REN 229*	SK3132	ECG229*	TM229*	WEP784	121-Z9021*
TR10	2SC1675L	DDBY259001	GE-213	PTC132*	REN 229*	SK3122	ECG229*	TM229*	WEP773	121-Z9021*
TR11	2SC945Q		GE-212	PTC121*	REN 199	SK3124/289	ECG199	TM199/**	WEP1945	121-972*
	2SC945AQ	DDBY224003	GE-212	PTC121*	REN 199	SK3124/289	ECG199	TM199/**	WEP1945	121-972*
TR12	2SC1675L	DDBY259001	GE-213	PTC132*	REN 229*	SK3122	ECG229*	TM229*	WEP773	121-Z9021*
TR13	2SC945Q		GE-212	PTC121*	REN 199	SK3124/289	ECG199	TM199/**	WEP1945	121-972*
	2SC945AQ	DDBY224003	GE-212	PTC121*	REN 199	SK3124/289	ECG199	TM199/**	WEP1945	121-972*
TR14	2SA733P	DDBY003001	GE-48	PTC127	REN 294	SK3114/290	ECG290	TM290/**	WEP911/290	121-Z9067
TR15	2SC945AQ	DDBY224003	GE-212	PTC121*	REN 199	SK3124/289	ECG199	TM199/**	WEP1945	121-972*
TR16	2SC1730L	DDBY269001	GE-17*	PTC136*	REN 107	SK3293/107	ECG316*	TM316*	WEP535/107	121-Z9093
TR17	2SC1674L	DDBY295002	GE-61*	PTC132*	REN 229*	SK3132	ECG229*	TM229*	WEP784	121-Z9021*
TR18	2SC1674L	DDBY295002	GE-61*	PTC132*	REN 229*	SK3132	ECG229*	TM229*	WEP784	121-Z9021*
TR19	2SC1675L	DDBY259001	GE-213	PTC132*	REN 229*	SK3122	ECG229*	TM229*	WEP773	121-Z9021*
TR20	2SC945Q		GE-212	PTC121*	REN 199	SK3124/289	ECG199	TM199/**	WEP1945	121-972*
	2SC945AQ	DDBY224003	GE-212	PTC121*	REN 199	SK3124/289	ECG199	TM199/**	WEP1945	121-972*
TR21	2SC1675L	DDBY259001	GE-213	PTC132*	REN 229*	SK3122	ECG229*	TM229*	WEP773	121-Z9021*
TR22	2SC1675L	DDBY259001	GE-213	PTC132*	REN 229*	SK3122	ECG229*	TM229*	WEP773	121-Z9021*
TR23	2SC1675L	DDBY259001	GE-213	PTC132*	REN 229*	SK3122	ECG229*	TM229*	WEP773	121-Z9021*
TR24	2SC1675L	DDBY259001	GE-213	PTC132*	REN 229*	SK3122	ECG229*	TM229*	WEP773	121-Z9021*
TR25	2SC1675L	DDBY259001	GE-213	PTC132*	REN 229*	SK3122	ECG229*	TM229*	WEP773	121-Z9021*
TR27	2SC945AQ	DDBY224003	GE-212	PTC121*	REN 199	SK3124/289	ECG199	TM199/**	WEP1945	121-972*
TR28	2SC945Q		GE-212	PTC121*	REN 199	SK3124/289	ECG199	TM199/**	WEP1945	121-972*
	2SC945AQ	DDBY224003	GE-212	PTC121*	REN 199	SK3124/289	ECG199	TM199/**	WEP1945	121-972*
TR29	2SC945Q		GE-212	PTC121*	REN 199	SK3124/289	ECG199	TM199/**	WEP1945	121-972*
	2SC945AQ	DDBY224003	GE-212	PTC121*	REN 199	SK3124/289	ECG199	TM199/**	WEP1945	121-972*
TR30	2SA733AP		GE-48	PTC127	REN 294	SK3114/290	ECG290	TM290/**	WEP911/290	121-Z9067
	2SA733P	DDBY003001	GE-48	PTC127	REN 294	SK3114/290	ECG290	TM290/**	WEP911/290	121-Z9067
TR31	2SA733AP		GE-48	PTC127	REN 294	SK3114/290	ECG290	TM290/**	WEP911/290	121-Z9067
	2SA733P	DDBY003001	GE-48	PTC127	REN 294	SK3114/290	ECG290	TM290/**	WEP911/290	121-Z9067
	2SA733P		GE-48	PTC127	REN 294	SK3114/290	ECG290	TM290/**	WEP911/290	121-Z9067
TR32	2SC945AQ	DDBY224003	GE-212	PTC121*	REN 199	SK3124/289	ECG199	TM199/**	WEP1945	121-972*
TR33	2SC945AQ	DDBY224003	GE-212	PTC121*	REN 199	SK3124/289	ECG199	TM199/**	WEP1945	121-972*
TR34	2SC1419C	DDBY278002	GE-66	PTC167	REN 152	SK3197/235	ECG152	TM152	WEP745/152	121-987-03
TR35	2SC945Q		GE-212	PTC121*	REN 199	SK3124/289	ECG199	TM199/**	WEP1945	121-972*
	2SC945AQ	DDBY224003	GE-212	PTC121*	REN 199	SK3124/289	ECG199	TM199/**	WEP1945	121-972*
TR36	2SC458C	DDBY273001	GE-210	PTC121*	REN 289	SK3124/289	ECG289	TM289/**	WEP458	121-Z9065
TR37	2SC945AQ	DDBY224003	GE-212	PTC121*	REN 199	SK3124/289	ECG199	TM199/**	WEP1945	121-972*
TR38	2SC1973	DDBY272001	GE-285*	PTC143*	REN 293	SK3849/293	ECG293	TM293	WEP912/293	121-Z9066
TR39	2SC1306	DDBY230001	GE-215	PTC186	REN 235	SK3239/236	ECG235	TM235/**	WEP785/235	121-Z9039
TR40	2SC496-O	DDBY246001	GE-57	PTC163	REN 295	SK3253/295	ECG295	TM295/**	WEP913/295	121-880
TR41	2SC1969B	DDBY307001	GE-216	PTC186	REN 236	SK3239/236	ECG236	TM236	WEP840/236	121-Z9040
TR42	2SC1675L	DDBY259001	GE-213	PTC132*	REN 229*	SK3122	ECG229*	TM229*	WEP773	121-Z9021*
TR44	2SC945Q		GE-212	PTC121*	REN 199	SK3124/289	ECG199	TM199/**	WEP1945	121-972*
	2SC945AQ	DDBY224003	GE-212	PTC121*	REN 199	SK3124/289	ECG199	TM199/**	WEP1945	121-972*
TR45	2SA733AP		GE-48	PTC127	REN 294	SK3114/290	ECG290	TM290/**	WEP911/290	121-Z9067
	2SA733P	DDBY003001	GE-48	PTC127	REN 294	SK3114/290	ECG290	TM290/**	WEP911/290	121-Z9067
TR301	2SC945AQ	DDBY224003	GE-212	PTC121*	REN 199	SK3124/289	ECG199	TM199/**	WEP1945	121-972*
TR302	2SC1419C	DDBY278002	GE-66	PTC167	REN 152	SK3197/235	ECG152	TM152	WEP745/152	121-987-03
TR401	2SD188M	DDBY403001	GE-75	PTC118	REN 130	SK3297/280	ECG130	TM130	WEP704/130	121-Z9011

* Lead configuration may vary from original.
/** Also available as exact type replacement.
(4) Four required.

ELECTROLYTIC CAPACITORS

ITEM No.	RATING	REPLACEMENT DATA				
		MFGR. PART No.	CORNELL-DUBILIER PART No.	MALLORY PART No.	SPRAGUE PART No.	
					Q-LINE	GENERAL LINE
C7	.22 35V	CSEZ512286		TDC224M050EL	QDT1-10	SD50-R229
C13	.1 35V	CSEZ511086		TDC104M050EL	QDT1-2	SD50-R109
C15	2.2 25V	CELZ512290	PC2-100	VTT2R2A50	QV1-21	EV-1617.1
C16	2.2 25V	CSEZ512296		TDC225M035FL		SD35-2R29
C17	.47 50V	CELZ814780	PC1-50	VTTR47A63	QV1-3	EV-1610
C19	.22 35V	CSEZ512286		TDC224M050EL	QDT1-10	SD50-R229
C24	47 10V	CELZ114700	PC50-16	VTT47D16	QV1-73	EV-1226
C26	47 10V	CELZ114700	PC50-16	VTT47D16	QV1-73	EV-1226
C27	.47 50V	CELZ814780	PC1-50	VTTR47A63	QV1-3	EV-1610
C59	1 25V	CSEZ511096		TDC105M035EL		SD35-19
C62	2.2 25V	CSEZ512296		TDC225M035FL		SD35-2R29
C63	2.2 25V	CSEZ512296		TDC225M035FL		SD35-2R29
C66	1000 10V	CELZ111020	PC1000-16	VTT1000L10	QV1-179	EV-1161
C72	4.7 10V	CSEZ114796		TDC475M010EL	QDT1-48	SD10-4R79
C73	4.7 25V	CELZ514790	PC5-50	VTT4R7B50	QV1-31	EV-1619.1
C79	47 10V	CELZ114700	PC50-16	VTT47D16	QV1-73	EV-1226
C83	2.2 25V	CELZ512290	PC2-100	VTT2R2A50	QV1-21	EV-1617.1
C84	22 6V	CSEZ902206		TDC226M015FL	QDT1-82	SD15-229
C90	10 16V	CELZ311000	PC10-25	VTT10B25	QV1-41	EV-1222
C92	47 10V	CELZ114700	PC50-16	VTT47D16	QV1-73	EV-1226
C107	220 10V	CELZ112210	PC250-10	VTT220F10	QV1-115	EV-1140

PARTS LIST AND DESCRIPTION (CONTINUED)

(When ordering parts, state Model, Part Number, and Description.)

ELECTROLYTIC CAPACITORS (cont)

ITEM No.	RATING	REPLACEMENT DATA				
		MFGR. PART No.	CORNELL-DUBILIER PART No.	MALLORY PART No.	SPRAGUE PART No.	
					Q-LINE	GENERAL LINE
C108	.47 50V	CELZ814780	PC1-50	VTTR47A63	QV1-3	EV-1610
C109	22 6V	CSEZ902206		TDC226M015FL	QDT1-82	SD15-229
C112	4.7 25V	CELZ514790	PC5-50	VTT4R7B50	QV1-31	EV-1619.1
C113	22 6V	CSEZ902206		TDC226M015FL	QDT1-82	SD15-229
C114	47 10V	CELZ114700	PC50-16	VTT47D16	QV1-73	EV-1226
C117	10 25V	CELZ511000	PC10-25	VTT10B25		EV-1422
C118	470 10V	CELZ114710	PC500-16	VTT470K16	QV1-151	EV-1251
C119	1 50V	CELZ811090	PC1-50	VTT1A50	QV1-11	EV-1615
C120	10 16V	CELZ311000	PC10-25	VTT10B25	QV1-41	EV-1222
C121	.47 50V	CELZ814780	PC1-50	VTTR47A63	QV1-3	EV-1610
C133	10 16V	CELZ311000	PC10-25	VTT10B25	QV1-41	EV-1222
C134	1000 25V	CELZ511020	WBR1000-25*	VTT1000N25	QV1-185	EV-1360
C141	2.2 50V		PC2-100	VTT2R2A50	QV1-21	EV-1617.1
C142	.47 50V	CELZ814780	PC1-50	VTTR47A63	QV1-3	EV-1610
C146	1 50V	CELZ811090	PC1-50	VTT1A50	QV1-11	EV-1615
C162	1 50V	CELZ811090	PC1-50	VTT1A50	QV1-11	EV-1615
C164	10 25V	CELZ511000	PC10-25	VTT10B25		EV-1422
C169	1 50V	CELZ811090	PC1-50	VTT1A50	QV1-11	EV-1615
C180	22 10V	CELZ112200	PC25-25	VTT22B16	QV1-55	EV-1224
C183	1 50V	CELZ811090	PC1-50	VTT1A50	QV1-11	EV-1615
C191	47 10V	CELZ114700	PC50-16	VTT47D16	QV1-73	EV-1226
C193	1 25V	CSEZ511096		TDC105M035EL		SD35-19
C215	47 10V	CELZ114700	PC50-16	VTT47D16	QV1-73	EV-1226
C302	220 16V	CELZ312210	PC250-25	VTT220H16	QV1-117	EV-1240
C304	3300 35V	CCZY046001	AA0155A	FP062		TVLU-1129

* Axial replacement for radial device.

CAPACITORS

ITEM No.	RATING	MFGR. PART No.	REPLACEMENT DATA			
			CORNELL-DUBILIER PART No.	MALLORY PART No.	SPRAGUE PART No.	
					Q-LINE	GENERAL LINE
C1	.022 50V		MGP025	TA125		TG-S25
C2	.022 50V		MGP025	TA125		TG-S25
C3	.001 50V			GP210	QCT2-41	10TS-D10
C4	.022 50V		MGP025	TA125		TG-S25
C5A	.022 50V		MGP025	TA125		TG-S25
C5B	27 NPO 50V 10%			CN0427		10TCC-Q27
C6	.001 50V			GP210	QCT2-41	10TS-D10
C8	82 NPO 50V 5%		NP082	CN0482		10TCC-Q82
C9	.001 50V			GP210	QCT2-41	10TS-D10
C10	100		NP0100	CN0310		10TCC-T10
C11	.022 50V		MGP025	TA125		TG-S25
C12	.022 50V		MGP025	TA125		TG-S25
C14	.022 50V		MGP025	TA125		TG-S25
C18	.022 50V		MGP025	TA125		TG-S25
C20	.022 50V		MGP025	TA125		TG-S25
C21	5 NPO 50V		NP06P8	CN0568		10TCC-V68
C22	3 NPO 50V		NP03P3	CN0533		10TCC-V33
C23	3 NPO 50V		NP03P3	CN0533		10TCC-V33
C25	.047 50V 10%		DPMS2S47	EWF1A147	QFT2-171	1FT-S47
C28	.1 50V 10%		WMF05P1	EWF05010	QFT2-215	1FT-P10
C29	12 NPO 50V			CN0412		10TCC-Q12
C30	.001 50V			GP210	QCT2-41	10TS-D10
C31	.001 50V			GP210	QCT2-41	10TS-D10
C32	.001 50V			GP210	QCT2-41	10TS-D10
C33	.0047 50V		GP4700	GP247		5GA-D47
C34	.001 50V			GP210	QCT2-41	10TS-D10
C35	.0047 50V		GP4700	GP247		5GA-D47
C36	4 NPO 50V		NP04P7	CN0547		10TCC-V47
C37	.0047 50V		GP4700	GP247		5GA-D47
C38	2 NPO 50V		NP02P2	CN0522		10TCC-V22
C39	.001 50V			GP210	QCT2-41	10TS-D10
C40	.001 50V			GP210	QCT2-41	10TS-D10
C41	.001 50V			GP210	QCT2-41	10TS-D10
C42	2 NPO		NP02P2	CN0522		10TCC-V22
C43	33 NPO 50V 10%		NP033	CN0433	QCC2-22	10TCC-Q33
C44	2 NPO		NP02P2	CN0522		10TCC-V22
C45	.022 50V		MGP025	TA125		TG-S25
C46	.022 50V		MGP025	TA125		TG-S25
C47	.022 50V		MGP025	TA125		TG-S25
C48	.01 50V			MAG5011		
C49	.022 50V		MGP025	TA125		TG-S25
C50	.022 50V		MGP025	TA125		TG-S25
C51	.022 50V		MGP025	TA125		TG-S25
C52	.022 50V		MGP025	TA125		TG-S25
C55	.022		DPMS2S22	M192P2239R8	QFT2-127	1FT-S22
C56	.022 50V		MGP025	TA125		TG-S25
C58	.001 10%		DPMS6D1	EWF1A210	QFT2-1	1FT-D10
C60	.01			MAG5011		
C61	.1 50V 10%		WMF05P1	EWF05010	QFT2-215	1FT-P10
C64	18 NPO 50V 10%			CN0418		10TCC-Q18
C65	10 NPO 50V		NP010	CN0410	QCC2-15	10TCC-Q10
C67	.01 50V			MAG5011		
C68	.022 50V		MGP025	TA125		TG-S25
C69	47 NPO 50V 10%		NP047	CN0447	QCC2-26	10TCC-047

CAPACITORS (cont)

ITEM No.	RATING	MFGR. PART No.	REPLACEMENT DATA			
			CORNELL-DUBILIER PART No.	MALLORY PART No.	SPRAGUE PART No.	
					Q-LINE	GENERAL LINE
C70	47 NPO 50V 10%		NP047	CN0447	QCC2-26	10TCC-Q47
C71	.047 10%		DPMS2S47	EWF1A147	QFT2-171	1FT-S47
C74	.01 50V			MAG5011		
C75	.01 50V			MAG5011		
C77	.01 50V			MAG5011		
C78	.01 50V			MAG5011		
C80	4 NPO 50V		NP04P7	CN0547		10TCC-V47
C81	270 N750 50V 10%			CN7327		10TCU-T27
C82	.0047 10%		WMF1D47	M192P4729R8	QFT2-63	1FT-D47
C85	.0033		WMF1D33	M192P3329R8	QFT2-43	1FT-D33
C86	.0068		WMF1D68	EWF1A268	QFT2-73	1FT-D68
C87	.022 50V		MGP025	TA125		TG-S25
C88	.01 10%		WMF1S1	EWF1A110	QFT2-91	1FT-S10
C89	.01 10%		WMF1S1	EWF1A110	QFT2-91	1FT-S10
C91	.001		DPMS6D1	EWF1A210	QFT2-1	1FT-D10
C93	.01 10%		WMF1S1	EWF1A110	QFT2-91	1FT-S10
C94	.01 50V			MAG5011		
C95	.01 50V			MAG5011		
C98	.001 50V			GP210	QCT2-41	10TS-D10
C99	.01 50V			MAG5011		
C100	.01 50V			MAG5011		
C101	470 50V		GP470	GP347	QCT2-35	10TS-T47
C102	100 NPO 50V 10%		NP0100	CN0310		10TCC-T10
C103	.01 50V			MAG5011		
C104	18 NPO 50V 10%			CN0418		10TCC-Q18
C105	10 NPO 50V		NP010	CN0410	QCC2-15	10TCC-Q10
C106	.01 50V			MAG5011		
C110	.1 10%		WMF05P1	EWF05010	QFT2-215	1FT-P10
C111	.022		DPMS2S22	M192P2239R8	QFT2-127	1FT-S22
C115	.001		DPMS6D1	EWF1A210	QFT2-1	1FT-D10
C116	.1		WMF05P1	EWF05010	QFT2-215	1FT-P10
C122	.01 50V			MAG5011		
C123	.01 50V			MAG5011		
C124	.01 50V			MAG5011		
C125	.01 50V			MAG5011		
C126	10 NPO 50V		NP010	CN0410	QCC2-15	10TCC-Q10
C127	220 50V			GP322		10TS-T22
C128	470 50V		GP470	GP347	QCT2-35	10TS-T47
C129	.01 50V			MAG5011		
C130	.01 50V			MAG5011		
C131	.01 50V			MAG5011		
C139	1 NPO 50V			CN0510		10TCC-V10
C140	10 NPO 50V		NP010	CN0410	QCC2-15	10TCC-Q10
C143	68 NPO 50V 5%		NP068	CN0468		10TCC-Q68
C144	39 NPO 50V 10%			CN0439		10TCC-Q39
C145	180 N750 50V 10%					10TCU-T18
C147	1 NPO 50V			CN0510		10TCC-V10
C148	390 N750 50V 10%					10TCU-T39
C149	330 N750 50V 10%		N330	CN7333		10TCU-T33
C150	.1		WMF05P1	EWF05010	QFT2-215	1FT-P10
C151	470 N750 50V 10%					10TCU-T47
C152	.0047 50V		GP4700	GP247		5GA-D47
C153	.1 50V 10%		WMF05P1	EWF05010	QFT2-215	1FT-P10
C154	.0047 50V		GP4700	GP247		5GA-D47
C155	.0047 50V		GP4700	GP247		5GA-D47
C156	.0047 50V		GP4700	GP247		5GA-D47
C157	.0047 50V		GP4700	GP247		5GA-D47
C158	47 NPO 50V 10%		NP047	CN0447	QCC2-26	10TCC-Q47
C159	330 N750 50V 5%		N330	CN7333		10TCU-T33
C160	2 NPO 50V		NP02P2	CN0522		10TCC-V22
C161	.01		WMF1S1	EWF1A110	QFT2-91	1FT-S10
C163	120 N220 50V 10%	CCRZB11215				
C165	.001 50V			GP210	QCT2-41	10TS-D10
C167	.022 50V		MGP025	TA125		TG-S25
C168	.047		DPMS2S47	EWF1A147	QFT2-171	1FT-S47
C170	100 50V		GP100	GP310	QCT2-24	10TS-T10
C171	56 NPO 50V 10%			CN0456		10TCC-Q56
C172	.001 50V			GP210	QCT2-41	10TS-D10
C173	.0047 50V		GP4700	GP247		5GA-D47
C174	220 N750 50V 10%		N220	CN7322		10TCU-T22
C175	33 NPO 50V 10%		NP033	CN0433	QCC2-22	10TCC-Q33
C181	.01 50V			MAG5011		
C184	.0047 50V		GP4700	GP247		5GA-D47
C189	.01 50V			MAG5011		
C190	.047		DPMS2S47	EWF1A147	QFT2-171	1FT-S47
C192	.001 50V			GP210	QCT2-41	10TS-D10
C195	47 NPO 50V 10%		NP047	CN0447	QCC2-26	10TCC-Q47
C196	.0047		GP4700	GP247		5GA-D47
C197	.0047		WMF1D47	M192P4729R8	QFT2-63	1FT-D47
C202	.0047 50V		GP4700	GP247		5GA-D47
C203	.0047 50V		GP4700	GP247		5GA-D47
C204	.0047 50V		GP4700	GP247		5GA-D47
C206	.022 50V		MGP025	TA125		TG-S25
C207	.1 50V			MAG5001		
C208	.022 50V		MGP025	TA125		TG-S25
C212	.01			MAG5011		
C214	.047 10%		DPMS2S47	EWF1A147	QFT2-171	1FT-S47
C216	.0047		GP4700	GP247		5GA-D47
C220	330 50V		GP330	GP333	QCT2-33	10TS-T33

CAPACITORS (cont)

ITEM No.	RATING	MFGR. PART No.	REPLACEMENT DATA			
			CORNELL-DUBILIER PART No.	MALLORY PART No.	SPRAGUE PART No.	
					Q-LINE	GENERAL LINE
C221	330 50V		GP330	GP333	QCT2-33	10TS-T33
C222	10 NPO		NP010	CN0410	QCC2-15	10TCC-Q10
C301	.039 50V 10%		DPMS6S39	M192P3939R8	QFT2-159	1FT-S39
C303	.039 50V 10%		DPMS6S39	M192P3939R8	QFT2-159	1FT-S39
C310	.047 10%		DPMS2S47	EWF1A147	QFT2-171	1FT-S47
C401	.0047 50V		GP4700	GP247		5GA-D47
C402	.0047 50V		GP4700	GP247		5GA-D47
C403	.001 50V			GP210	QCT2-41	10TS-D10
C404	.001 50V			GP210	QCT2-41	10TS-D10
C405	.001 50V			GP210	QCT2-41	10TS-D10
C406	.001 50V			GP210	QCT2-41	10TS-D10
C407	.001 50V			GP210	QCT2-41	10TS-D10
C408	.0047 50V		GP4700	GP247		5GA-D47
C409	.0047 50V		GP4700	GP247		5GA-D47
C410	.0047 50V		GP4700	GP247		5GA-D47
C411	.0047 50V		GP4700	GP247		5GA-D47
C412	.01 50V			MAG5011		
C413	.01 50V			MAG5011		
C414	.1 50V			MAG5001		
C416	.01 50V			MAG5011		
C417	.001 50V			GP210	QCT2-41	10TS-D10
C420	.0033 50V		GP3300	GP233	QC2-107	5GA-D33
C421	.0047 50V		GP4700	GP247		5GA-D47
C422	.001 125V			GP210	QCT2-41	10TS-D10
C423	.001 125V			GP210	QCT2-41	10TS-D10
C424	.001 125V			GP210	QCT2-41	10TS-D10
C425	.001 125V			GP210	QCT2-41	10TS-D10
CC1		HHAY003001				
CT1	20	CCVY028004				
CT2	20	CCVY028004				
CT3	20	CCVY028004				

CONTROLS (All wattages 1/2 watt, or less, unless listed)

ITEM No.	FUNCTION	RESISTANCE	REPLACEMENT DATA		
			MFGR. PART No.	MALLORY PART No.	TRW PART No.
RT301	Voltage	300	RRVY146002	MTC32L1	X201R351B
VR1	SIG Meter	10K	RRVY189005	RVA0911H103	U260R103B
VR2	Squelch Range	1000	RRVY189003	RVA0911H102	U260R102B
VR3	XMT Freq.	3000	RRVY189004	RVA0911H502	U260R502B
VR5	Carrier Balance	10K	RRVY189005	RVA0911H103	U260R103B
VR6	AM Power	5000	RRVY189010	RVA0911H502	U260R502B
VR7	RF ALC	10K	RRVY189005	RVA0911H103	U260R103B
VR8	RF Driver Bias	500	RRVY189002	RVA0911H501	U260R501B
VR9	RF Final Bias	5000	RRVY189010	RVA0911H502	U260R502B
VR10	TX Power Meter	100K	RRVY189008	RVA0911H104	U260R104B
VR12	MOD	100K	RRVY189008	RVA0911H104	U260R104B
VR401	Squelch	100K	RRVY126001		
VR402	Clarifier	20K	RRVY139001		
VR403	Volume/Power Switch	10K	RRVY008001		
VR404	RF Gain	10K	RRVY324001		
VR405	Mic Gain	10K	RRVY036001		

RESISTORS (Power and Special)

ITEM No.	RATING	REPLACEMENT DATA	
		MFGR. PART No.	WORKMAN PART No.
R306	150 Ohm 2W Flame-proof 10%	RSJZ201515	22-4076

ITEM No.	RATING	REPLACEMENT DATA	
		MFGR. PART No.	WORKMAN PART No.
R426	3.9 Ohm 5W 10%	RXJZ503995	

COILS (RF-IF)

ITEM No.	FUNCTION	REPLACEMENT DATA			REMARKS
		PART No.	OTHER IDENTIFICATION	MILLER PART No.	
L1	Noise Blanker	LLAY038001		CBS512-7TC	
L2	Noise Blanker	LLAY179001			
L3	IF Amp (7.8MHz)	LLAY255001			
L4	IF Amp (7.8MHz)	LLAY263001			
L5	Mixer (7.8MHz)	LLAY262001			
L6	Mixer (7.8MHz)	LLAY257001			
L7	Mixer (7.8MHz)	LLAY258001			
L8	RF Amp (27MHz)	LLAY259001			
L9	RF Amp (27MHz)	LLAY260001			
L10	Receive Antenna(27MHz)	LLAY261001			
L11	RF Choke (470uH)	LLZY012004			
L12	Mixer (100uH)	LLZY012001			
L13	VCO/Mixer	LLAY216001			
L14	VCO/Mixer (34MHz)	LLAY195001			
L15	RF Choke (470uH)	LLZY012004			
L16	RF Choke (470uH)	LLZY012004			
L17	Carrier Shift(7.8000MHz)	LLAY217001			
L18	Tripler (33MHz)	LLAY256001			
L19	Oscillator (34.9825MHz)	LLAY217001			
L20	Oscillator (34.9850MHz)	LLAY218001			
L21	RF Choke (470uH)	LLZY012004			
L22	RF Choke (470uH)	LLZY012004			
L23	RF Choke (470uH)	LLZY012004			
L24	RF Choke (470uH)	LLZY012004			
L25	RF Choke (100uH)	LLZY012001			
L26	XMT Mixer (7.8MHz)	LLAY219001			
L27	VCO/Mixer (35MHz)	LLAY160001			
L28	XMT Mixer (27MHz)	LLAY220001			
L29	XMT Mixer (27MHz)	LLAY254001			
L30	XMT Predriver	LLDY096001			
L33	RF Choke	LLDY098001			
L35	RF Choke	LLDY098001			
L36	Final (27MHz)	LLCY019001		CB305	
L37	Pi Filter	LLEY051001			
L38	Antenna Matching	LLEY051001			
L39	TVI Trap (54MHz) Min	LLCY019001		CB305	
L401	RF Choke	LLDY013001			
L402	RF Choke	LLDY013001			
L403	RF Choke	LLDY089001			
L406	RF Choke	LLDY089001			
L407	RF Choke	LLDY089001			
L408	RF Choke	LLDY089001			
L409	RF Choke	LLDY027001			
L410	RF Choke	LLDY027001			

TRANSFORMER (Power)

ITEM No.	RATING		REPLACEMENT DATA			NOTES
	PRI.	SEC. 1	MFGR. PART No.	THORDARSON PART No.	TRIAD PART No.	
T401	120V AC @ 1A AC	17.40V AC @ 3.78A AC	TTFY143001			

SPEAKER

ITEM No.	TYPE	REPLACEMENT DATA		NOTES
		MFGR. PART No.	QUAM PART No.	
SP401	3 1/2" PM, 8 Ohms	ASPY060001	3A05Z8	

FUSE DEVICES

ITEM No.	DESCRIPTION	REPLACEMENT DATA						
		PART No.		BUSS PART No.		LITTELFUSE PART No.		WORKMAN PART No.
		DEVICE	HOLDER	DEVICE	HOLDER	DEVICE	HOLDER	DEVICE
F401	4A Quick-acting	FS-012	FH-002	AGC4	HRK	311004	150145	
F402	4A Quick-acting	FS-012		AGC4	HKP	311004	442006	

MISCELLANEOUS

ITEM No.	PART NAME	PART No.	NOTES
D401	LED	DDAY078001	Channel Display (TLR321) Tens, Units (1.99V @ 5.8mA each segment)
D402	LED	DDAY007001	XMT (TLR104)(Red)(2.00V @ 15mA)
D405	LED	DDAY032001	Receive (TLG103)(Green)(2.07V @ 15mA)
D410	LED	DDAY100001	AM (Red)(2.00V @ 14.1mA) TLR124
D411	LED	DDAY100001	USB (Red)(2.00V @ 14.1mA) TLR124
D412	LED	DDAY100001	LSB (Red)(2.00V @ 14.1mA) TLR124
FT1	Filter	FFLY065001	7.8MHz (FL-065) Crystal
FT2	Filter	FFLY046001	7.8MHz (FL-046) Crystal
J401	Jack	JJKY010001	PA Speaker (JK-010)
J402	Jack	JJKY010001	External Speaker (JK-010)
J403	Jack	JJKY052001	DC Power (JK-052)
J404	Jack	JJKY107001	Mic (JK-107)
J405	Jack	JJKY068001	Antenna (M-Type)(JK-068)
J406	Jack	JJKY005002	Phone (JK-005)
L31	Ferrite Bead	LLDY087001	LD-087
L32	Ferrite Bead	LLDY101001	LD-101
L34	Ferrite Bead	LLDY087001	LD-087
L50	Ferrite Bead	LLDY077001	LD-077
L51	Ferrite Bead	LLDY077001	LD-077
L52	Ferrite Bead	LLDY077001	LD-077
L404	Ferrite Bead	LLDY077001	LD-077
L405	Ferrite Bead	LLDY077001	LD-077
M401	Meter	ZMTY135001	Signal/XMT Power (MT-135)
M402	Motor		Clock (Part of Clock Assembly)
PL401	Lamp	VPLY065011	Meter (10.39V @ 32mA AC) (PL-065)
PL402	Lamp		Part of Clock (7.16V @ 70mA AC)
P403	Plug		DC Power (Part of DC Power Cord)
P404	Plug		Mic (Part of Microphone)
S401	Switch	SSRY208001	Channel Selector, Rotary SR-208
S402	Switch		Power (Part of VR403)
S403	Switch	SSRY205001	AM/USB/CSB, Rotary SR-205
S404	Switch	SSWY144001	Squelch (CB/PA) Push SW-144
S405	Switch	SSWY144001	NB/ANL (On/Off) Push SW-144
S408	Switch	SSWY144001	S/RF/MOD Push SW-144
S409	Switch	SSWY099001	AC/DC Slide, SW-099
X1	Crystal	QQXY077001	10.240MHz, QX-077
X2	Crystal	QQXY084001	7.8025MHz, QX-084
X3	Crystal	QQXY083001	7.7975MHz, QX-083
X4	Crystal	QQXY098001	11.1125MHz, QX-098
	Clock	ZCKY007001	Digital, CK-007
	Cord	WWZY022001	AC Power, WZ-022
	Cord	WZDZ070273	DC Power, W-070273
	Microphone	AMKY108001	MK-108
	P.C. Board	PPCY460011	Channel LED, PC-460AA
	P.C. Board	PPCY395001	Channel Switch, PC-395AA
	P.C. Board	PPCY372011	Filter, PC-372AA
	P.C. Board	PPCY385014	Main, PC-385AD
	P.C. Board	PPCY459011	Mic, PC-459AA
	P.C. Board	PPCY461011	Phone, PC-461AA
	P.C. Board	PPCY457011	Push Switch, PC-457AA
	P.C. Board	PPCY006052	Power Supply, PC-006EB
	P.C. Board	PPCY401011	Speaker Jack, PC-401AA
	P.C. Board	PPCY458011	Mode LED, PC-458AA

CABINETS & CABINET PARTS (When ordering specify model, chassis & color)

ITEM	PART No.
Cover, Bottom	MDBP204592
Cover, Top	MDBP204583
Filter, Optical, Channel Display	MDAP404595
Foot (Black)	MZTT010002
Foot (Black)	MZTT010004
Knob	MDMP406545
Knob	MDMP406544

ITEM	PART No.
Knob	MDMP406543
Knob	MDMP402181
Knob, Channel	MDMP406425
Panel, Front	MDMP104577
Panel, Rear	MDBP206088
Plate, Decoration	MDAP406550
Button (Push)	MDMP404046