For Supplier Address See PHOTOFACT Index

NOTE

Repair or adjustment of transmitter circuits must be under supervision of a person with first-or second-class radiotelephone license.
(Refer to FCC Rules and Regulations Part 95, Subpart C & D.)

The frequency of the transmitter should be checked periodically with a secondary frequency standard to insure proper and legal operation.

Best results will be obtained when adjusting the final RF output circuit if the antenna normally used is connected and the chassis is as nearly in the cabinet as possible.

Connect either 50-ohm dummy load or the normally used antenna system.

MODEL 14T303

MANUFACTURER'S SPECIFICATIONS

GENERAL

Channels: 40
Frequency Range: 26,965-27.405 MHz
Operating Temperature Range:
−30°C to +50°C (−22°F to +112°F)
Power Source:
105-120 V AC 50/60 Hz or 12 V DC systems
Current Drain:
Transmit: 1.5A nominal
Receive: 1.2A (full audio)
Dimensions:
12-1/4" x 10-1/8" x 4-1/4"
311 mm x 257 mm x 108 mm
Weight: 8 lbs. 13 oz. (4 kg)

TRANSMITTER

Emission: 6A3
RF Power Output: 4W
Modulation Type: AM
Modulation Level:
100% max. AM (limited to FCC specs)
Spurious Suppression: −60 dB or more
Harmonic and Spurious Suppression:
−60 dB or more
Antenna Impedance: for 40 ohm antenna systems

RECEIVER

Sensitivity: 0.5 μV for 10 dB S/N
Adjacent Channel Rejection:
−40 dB or more
Image Rejection: 60 dB (1st IF)
IF Frequency:
1st IF: 10.695 MHz
2nd IF: 455 KHz
Squelch Sensitivity: 1.5-100 μV
Audio Output: 3 watts

Courtesy of the Manufacturer

HOWARD W. SAMS & CO., INC. Indianapolis, Indiana 46206
© 1978 Howard W. Sams & Co., Inc. Printed in U. S. of America 8CE839

ALIGNMENT INSTRUCTIONS

CAUTION: Use isolation transformer or observe polarity when connecting test equipment.
Maintain line voltage at 120V AC. Allow a 15-minute warm-up period.
Adjustments made with 13.8-volt DC input.
Connect low sides of test equipment to ground unless specified otherwise.
Connect 50-ohm dummy load or antenna before keying transmitter.
Connect microphone.
Before adjustment or alignment, adjust RV1a for 13.8 volts at pin 3 of power supply board.
Connect microphone.

Suggested Alignment Tools:	GC ELECTRONICS:
L14, T7 thru T10.	.5009, 8728-A, 8728
L7, L11, L12.	.9304, 9300, 9302
L1, L2, L5, T1 thru T6.	.9440
CT1	.5000, 8276

SYNTHESIZER ALIGNMENT

TEST EQUIPMENT	TRANSCEIVER	ADJUST	REMARKS
Input of frequency counter to TP1 (Q2, Emitter).	Ch. 19 Delta Tune 0	CT1	Adjust for 10.240MHz ±50Hz.
Input of RF VTVM to TP2 (T1, Secondary).	Ch. 19 Delta Tune 0	T1	Adjust for maximum.
Input of DC meter to TP8.	Ch. 1	L1	Adjust for 3.60V ±.1V.
Input of RF VTVM to TP4 (IC3, Pin 4).	Ch. 19	L2,T2	Adjust for maximum.
Input of frequency counter to TP4 (IC3, Pin 4).	Ch. 1		Check for 37.660MHz. Check all channels. (See Truth Chart for correct frequencies.)
Input of frequency counter to TP3 (IC3, Pin 1).	Ch. 19, XMT		Check for 10.695MHz.

RECEIVER ALIGNMENT

Connect an AC VTVM or AF wattmeter across speaker voice coil.
Adjust volume control to obtain a suitable indication.
Delta Tune 0, Squelch MINIMUN, ANL Off, NB Off, RF Gain Maximun.

TEST EQUIPMENT	TRANSCEIVER	ADJUST	REMARKS
Output of signal generator thru .01uF to TP10. (Q10, Emitter). 455kHz, 1000Hz @ 30% modulation.	Ch. 19	T10,T9,T8	Adjust for maximum output.
Output of signal generator thru .01uF to antenna jack. 27.185MHz, 1000Hz @ 30% modulation.	Ch. 19	T7,L14,T6,T5	Adjust for maximum output. If necessary, readjust T8, T9 and T10.

RECEIVER ADJUSTMENTS

Connect an AC VTVM or AF wattmeter across speaker voice coil.
Adjust volume control to obtain a suitable indication.
Delta Tune 0, ANL Off, NB Off, RF Gain Maximum.

TEST EQUIPMENT	TRANSCEIVER	ADJUST	REMARKS
Output of signal generator thru .01uF to antenna jack. 27.185MHz, 1000Hz @ 30% modulation. Output 100uV.	Ch. 19	RV1b	SQUELCH RANGE Set squelch control fully clockwise. Adjust RV1b so that squelch just breaks.
Output of signal generator thru .01uF to antenna jack. 27.185MHz, 1000Hz @ 30% modulation. Output 100uV.	Ch. 19 SRF/CAL/SWR S/RF	RV3	S METER Adjust for 9 on S scale of meter.

TRANSMITTER ALIGNMENT

Connect an RF wattmeter and 50-ohm, 25-watt dummy load to antenna connector.
NOTE: Be sure to check transmit frequency and power on all active channels after alignment of transmitter.
See page 4 for channel frequencies.

TEST EQUIPMENT	TRANSCEIVER	ADJUST	REMARKS
	Ch. 19	L5,T3,T4 L7,L11,L12	Adjust for maximum.
	Ch. 19	L7	Adjust clockwise for 4.4 watts.
	Ch. 19	L12	Adjust counterclockwise for 3.8 watts.

TRANSMITTER ADJUSTMENTS

Connect an RF wattmeter and 50-ohm, 25-watt dummy load to antenna connector.
NOTE: Be sure to check transmit frequency and power on all active channels after adjustments of transmitter.
See page 4 for channel frequencies.

TEST EQUIPMENT	TRANSCEIVER	ADJUST	REMARKS
Modulation meter to antenna jack. Inject a 20mV, 100Hz signal at mic input.	Ch. 19	RV2	AMC Adjust for 90% modulation.
Modulation meter to antenna jack. Inject a 20mV, 1000Hz signal at mic input.	Ch. 19	RV541	MODULATION METER Adjust so that modulation meter reads in the space between the last two white dashes on the right.
Connect an RF wattmeter and 50-ohm, 25 watt dummy load to antenna connector.	Ch. 19 S/RF/CAL/SWR S/RF	RV502	RF PANEL METER Adjust so that RF panel meter agrees with RF wattmeter.
Connect a 100 ohm, 5 watt non-inductive resistor to antenna jack.	Ch. 19	RV501	SWR Place S/RF/CAL/SWR switch to CAL. Adjust SWR/CAL VR4 to SET and SWR meter. Place S/RF/CAL/SWR switch to SWR. Adjust RV501 for 2 on SWR scale of meter.

TRUTH CHART

1 = 5.33 Volts 0 = 0 Volts

CHANNEL	IC1 PROGRAM DIVIDER PINS 9	10	11	12	13	14	15	REC & XMIT VCO OUTPUT IN MHz AT TP4
1	1	0	0	1	0	1	0	37.660
2	1	0	0	1	0	0	1	37.670
3	1	0	0	1	0	0	0	37.680
4	1	0	0	0	1	1	0	37.700
5	1	0	0	0	1	0	1	37.710
6	1	0	0	0	1	0	0	37.720
7	1	0	0	0	0	1	1	37.730
8	1	0	0	0	0	0	1	37.750
9	1	0	0	0	0	0	0	37.760
10	0	1	1	1	1	1	1	37.770
11	0	1	1	1	1	1	0	37.780
12	0	1	1	1	1	0	0	37.800
13	0	1	1	1	0	1	1	37.810
14	0	1	1	1	0	1	0	37.820
15	0	1	1	1	0	0	1	37.830
16	0	1	1	0	1	1	1	37.850
17	0	1	1	0	1	1	0	37.860
18	0	1	1	0	1	0	1	37.870
19	0	1	1	0	1	0	0	37.880
20	0	1	1	0	0	1	0	37.900

1 = 5.33 Volts 0 = 0 Volts

CHANNEL	IC1 PROGRAM DIVIDER PINS 9	10	11	12	13	14	15	REC & XMIT VCO OUTPUT IN MHz AT TP4
21	0	1	1	0	0	0	1	37.910
22	0	1	1	0	0	0	0	37.920
23	0	1	0	1	1	0	1	37.950
24	0	1	0	1	1	1	1	37.930
25	0	1	0	1	1	1	0	37.940
26	0	1	0	1	1	0	0	37.960
27	0	1	0	1	0	1	1	37.970
28	0	1	0	1	0	1	0	37.980
29	0	1	0	1	0	0	1	37.990
30	0	1	0	1	0	0	0	38.000
31	0	1	0	0	1	1	1	38.010
32	0	1	0	0	1	1	0	38.020
33	0	1	0	0	1	0	1	38.030
34	0	1	0	0	1	0	0	38.040
35	0	1	0	0	0	1	1	38.050
36	0	1	0	0	0	1	0	38.060
37	0	1	0	0	0	0	1	38.070
38	0	1	0	0	0	0	0	38.080
39	0	0	1	1	1	1	1	38.090
40	0	0	1	1	1	1	0	38.100

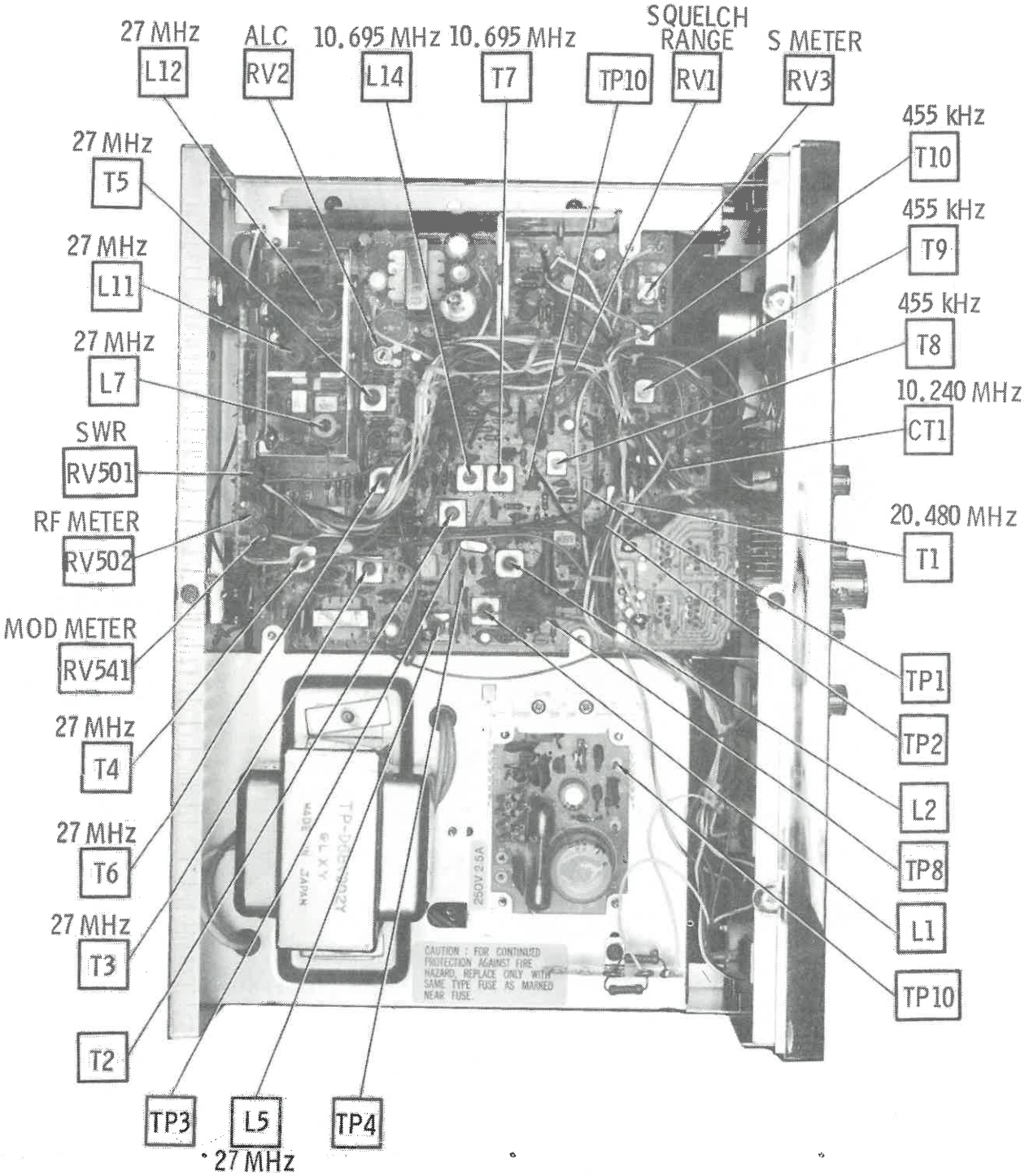
27 MHz
L12
ALC
RV2
10.695 MHz
L14
10.695 MHz
T7
TP10
SQUELCH RANGE
RV1
S METER
RV3
455 kHz
T10
455 kHz
T9
455 kHz
T8
10.240 MHz
CT1
20.480 MHz
T1
TP1
TP2
L2
TP8
L1
TP10
27 MHz
T5
27 MHz
L11
27 MHz
L7
SWR
RV501
RF METER
RV502
MOD METER
RV541
27 MHz
T4
27 MHz
T6
27 MHz
T3
T2
TP3
L5
27 MHz
TP4

CHASSIS-TOP

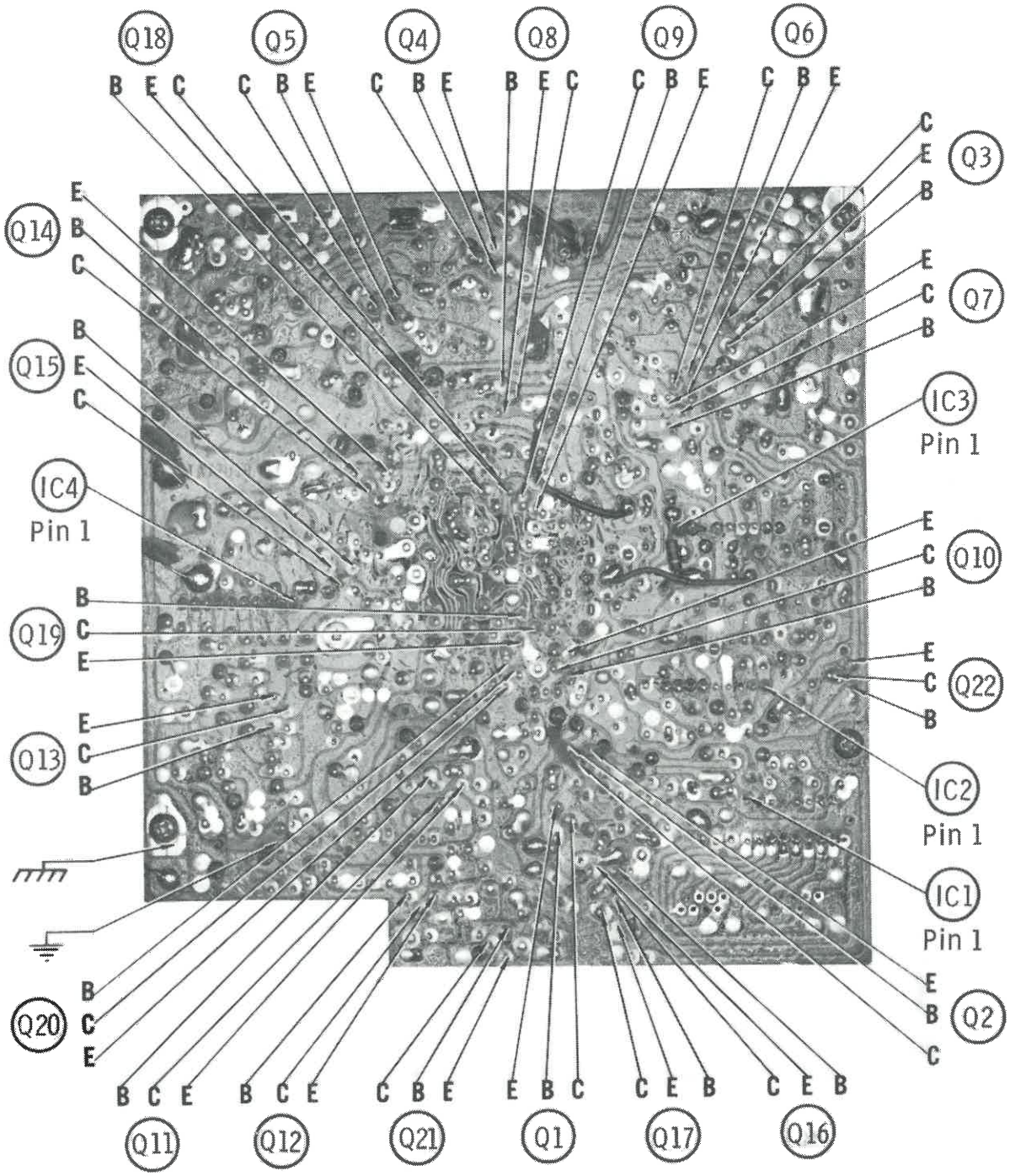
Q18
B E C
Q5
C B E
Q4
C B E
Q8
B E C
Q9
C B E
Q6
C B E
Q3
C
E
B
Q7
E
C
B
IC3
Pin 1
Q10
E
C
B
Q22
E
C
B
IC2
Pin 1
IC1
Pin 1
Q2
E
B
C
Q16
C E B
Q17
C E B
Q1
E B C
Q21
C B E
Q12
B C E
Q11
B C E
Q20
B
C
E
Q13
E
C
B
Q19
B
C
E
Q15
B
E
C
Q14
E
B
C
IC4
Pin 1

MAIN BOARD

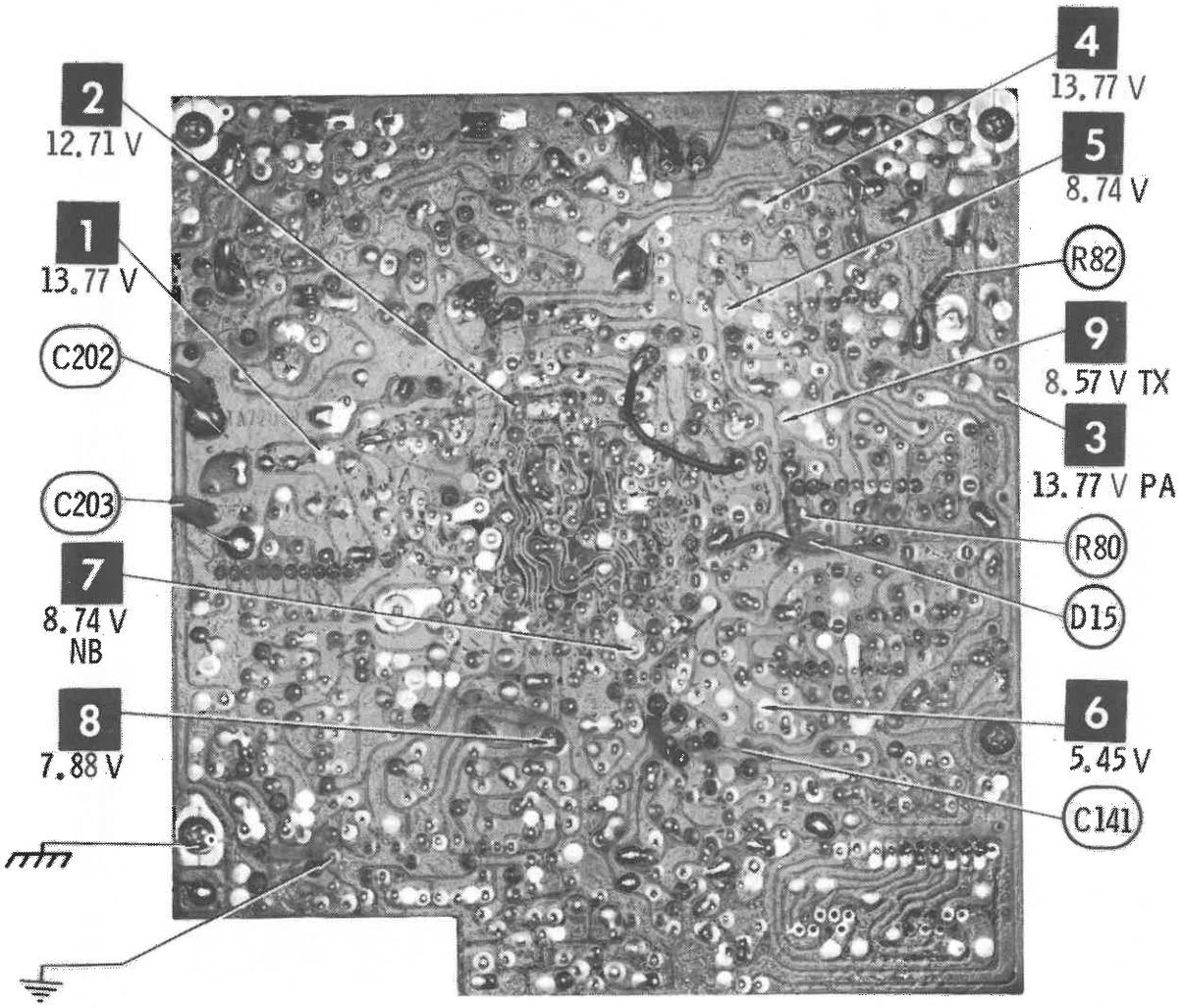
2
12.71 V
1
13.77 V
C202
C203
7
8.74 V
NB
8
7.88 V
4
13.77 V
5
8.74 V
R82
9
8.57 V TX
3
13.77 V PA
R80
D15
6
5.45 V
C141

MAIN BOARD

A Howard W. Sams CIRCUITRACE® Photo

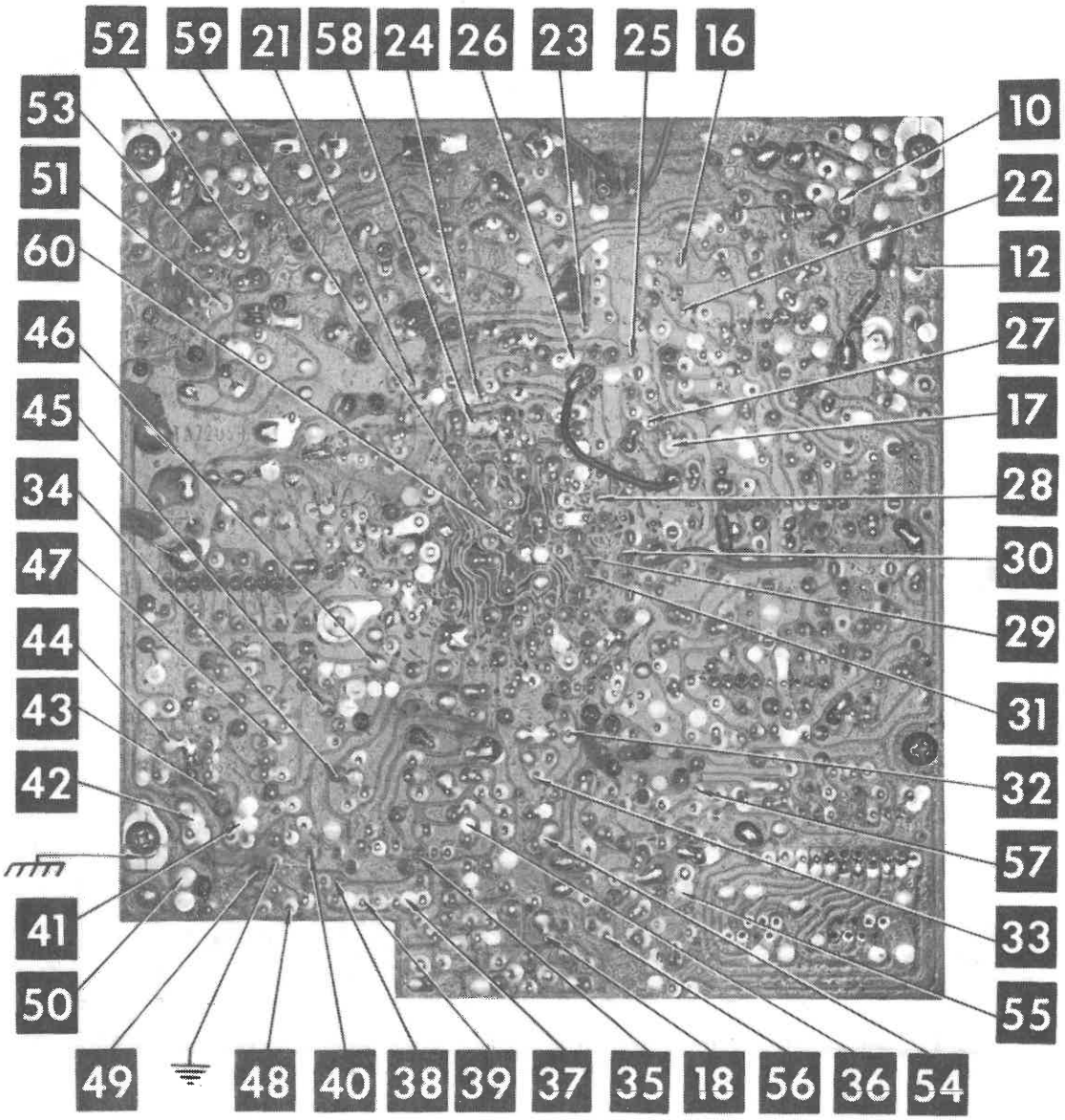

MAIN BOARD

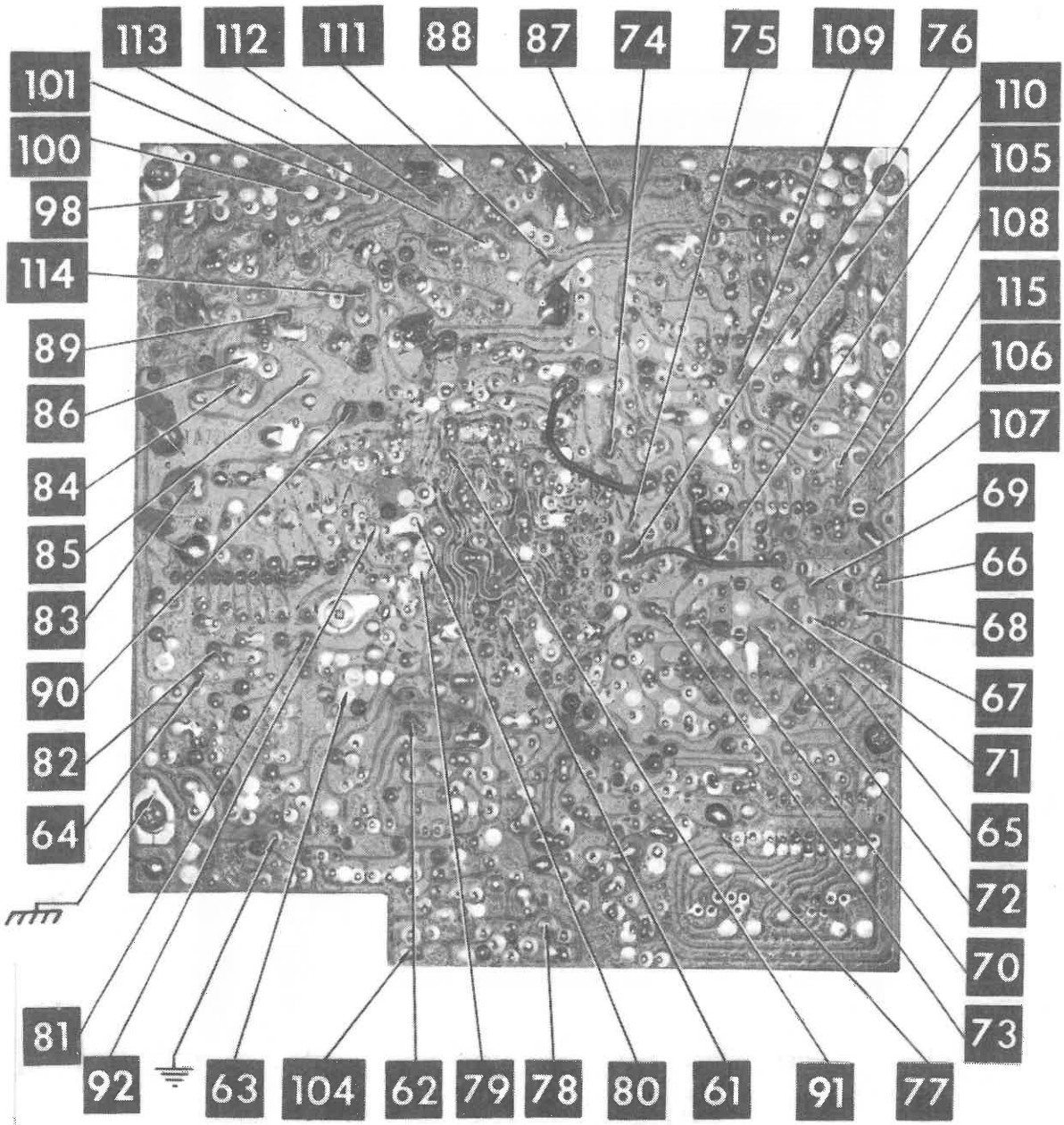
113
112
111
88
87
74
75
109
76
101
100
98
114
89
86
84
85
83
90
82
64
81
92
63
104
62
79
78
80
61
91
77
73
70
72
65
71
67
68
66
69
107
106
115
108
105
110

MAIN BOARD

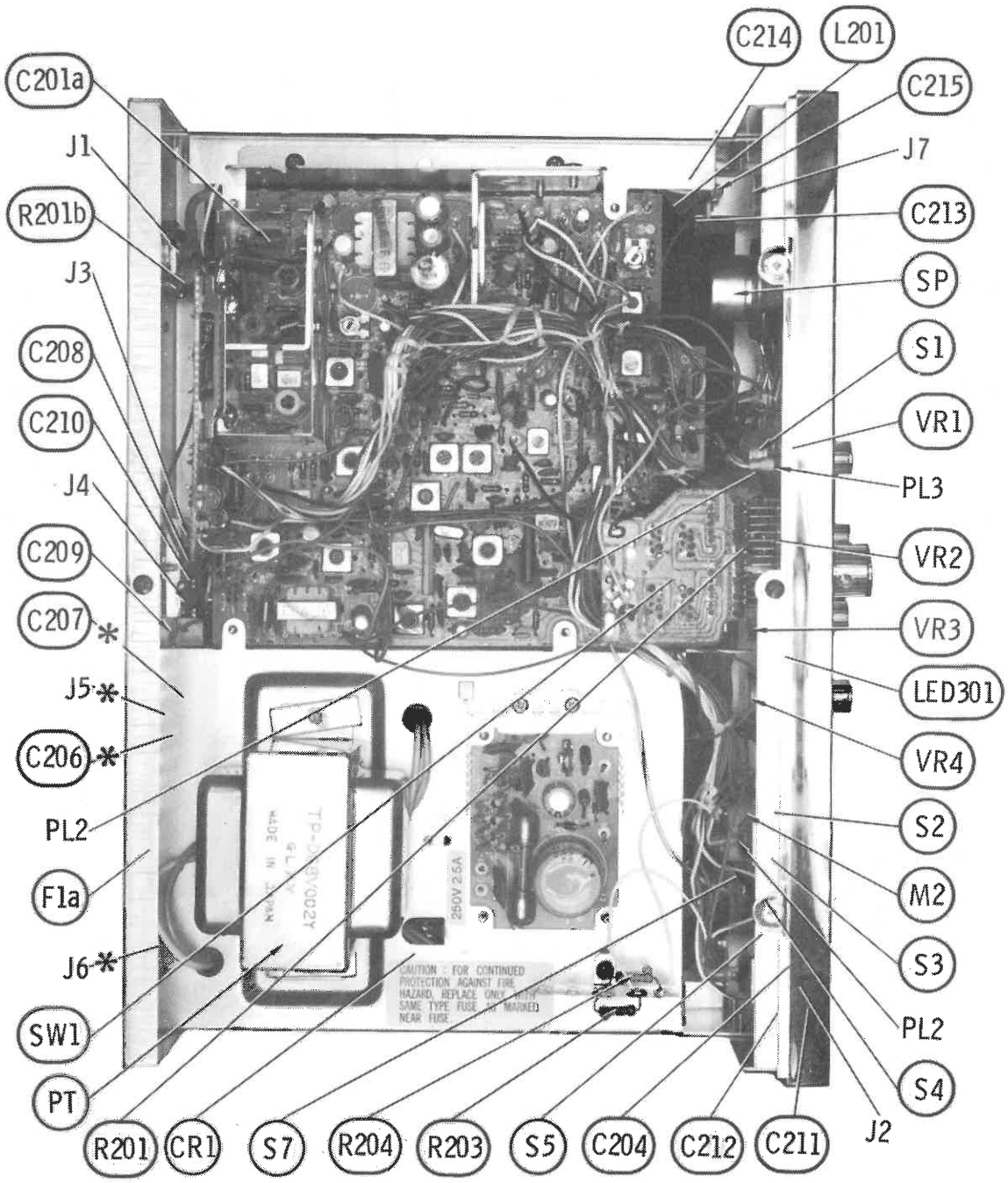

* Located on bottom of board

CHASSIS-TOP

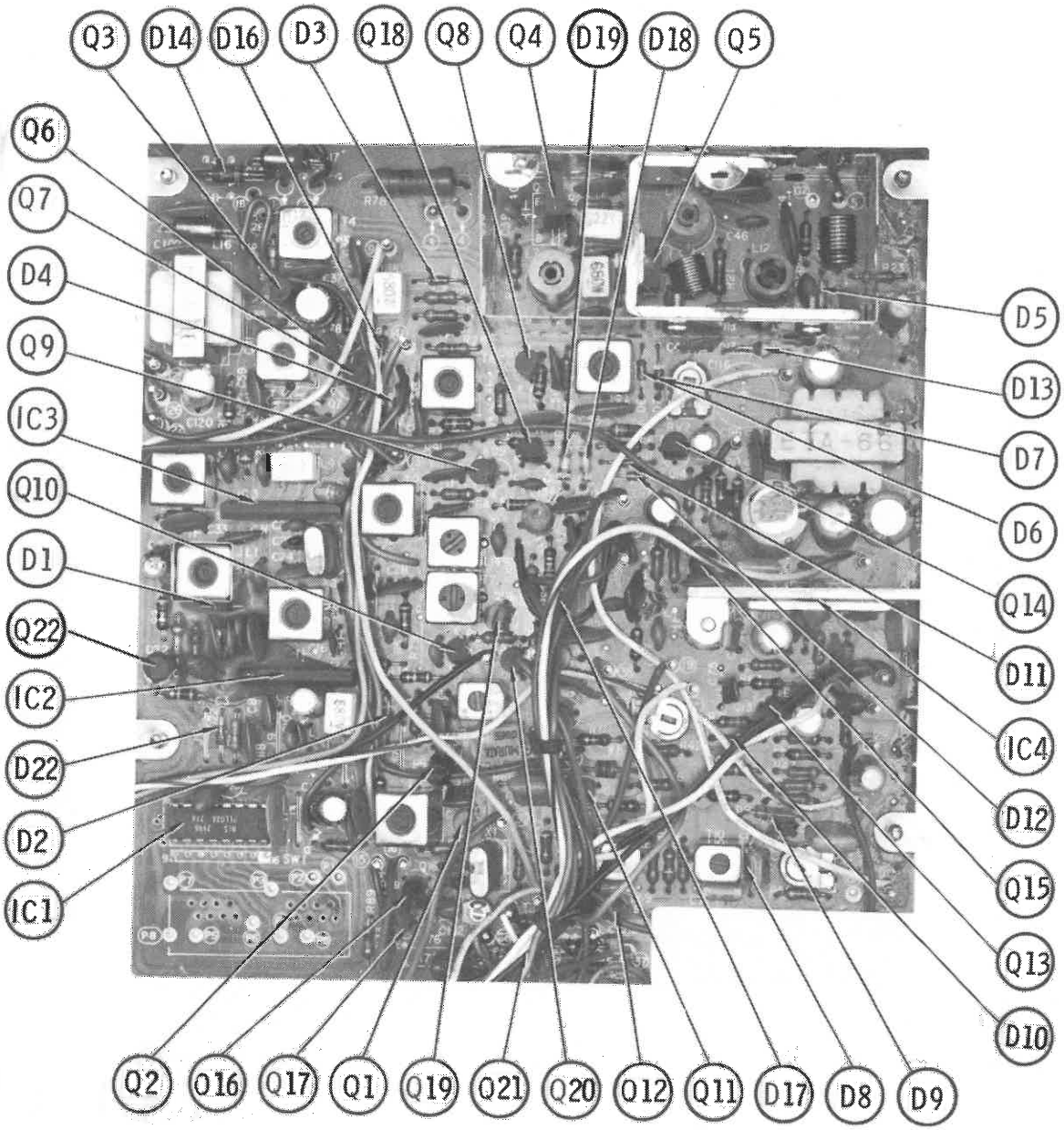
Q3
D14
D16
D3
Q18
Q8
Q4
D19
D18
Q5
Q6
Q7
D4
Q9
IC3
Q10
D1
Q22
IC2
D22
D2
IC1
D5
D13
D7
D6
Q14
D11
IC4
D12
Q15
Q13
D10
Q2
Q16
Q17
Q1
Q19
Q21
Q20
Q12
Q11
D17
D8
D9

MAIN BOARD

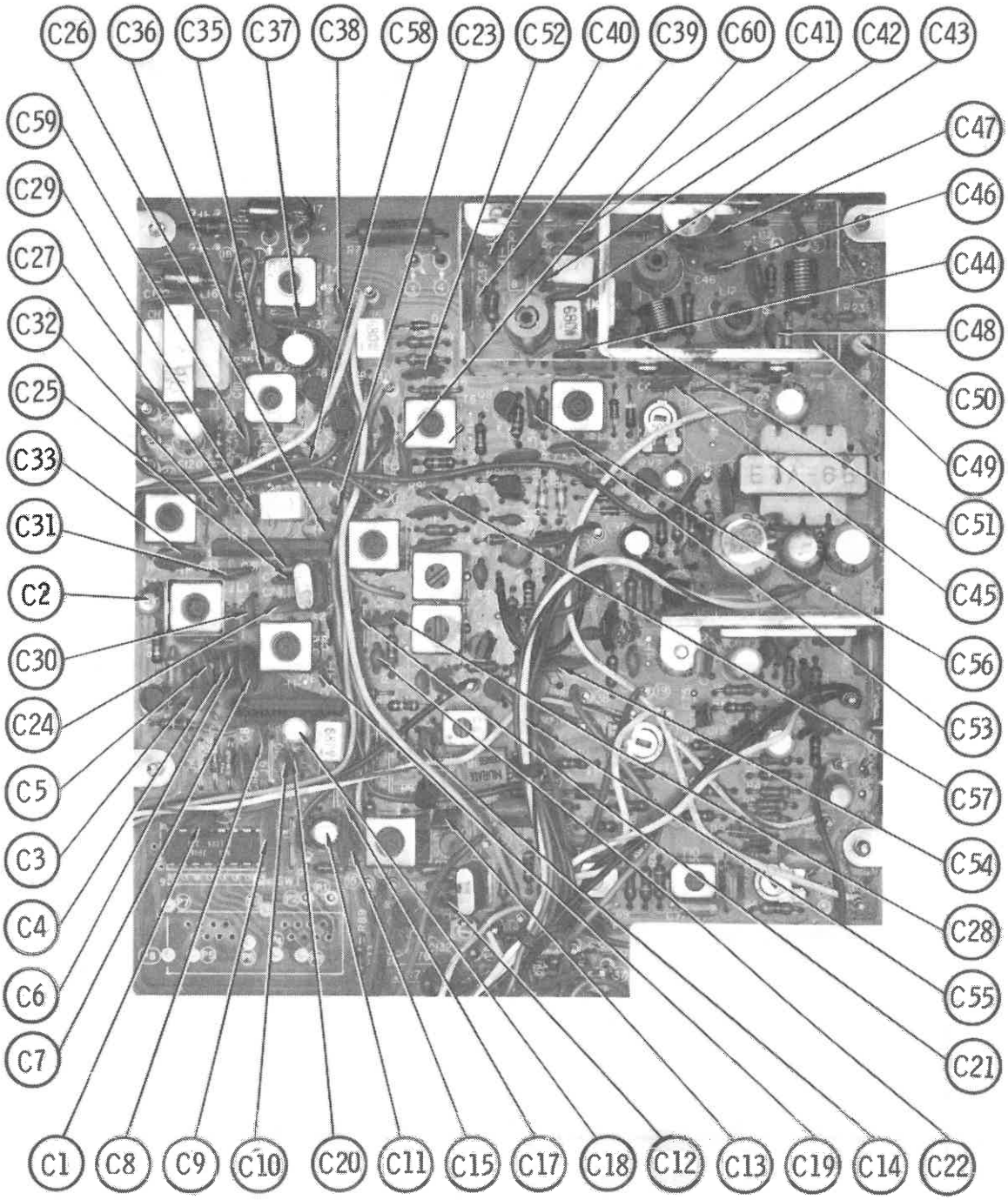
C26
C36
C35
C37
C38
C58
C23
C52
C40
C39
C60
C41
C42
C43
C59
C29
C27
C32
C25
C33
C31
C2
C30
C24
C5
C3
C4
C6
C7
C47
C46
C44
C48
C50
C49
C51
C45
C56
C53
C57
C54
C28
C55
C21
C1
C8
C9
C10
C20
C11
C15
C17
C18
C12
C13
C19
C14
C22

MAIN BOARD

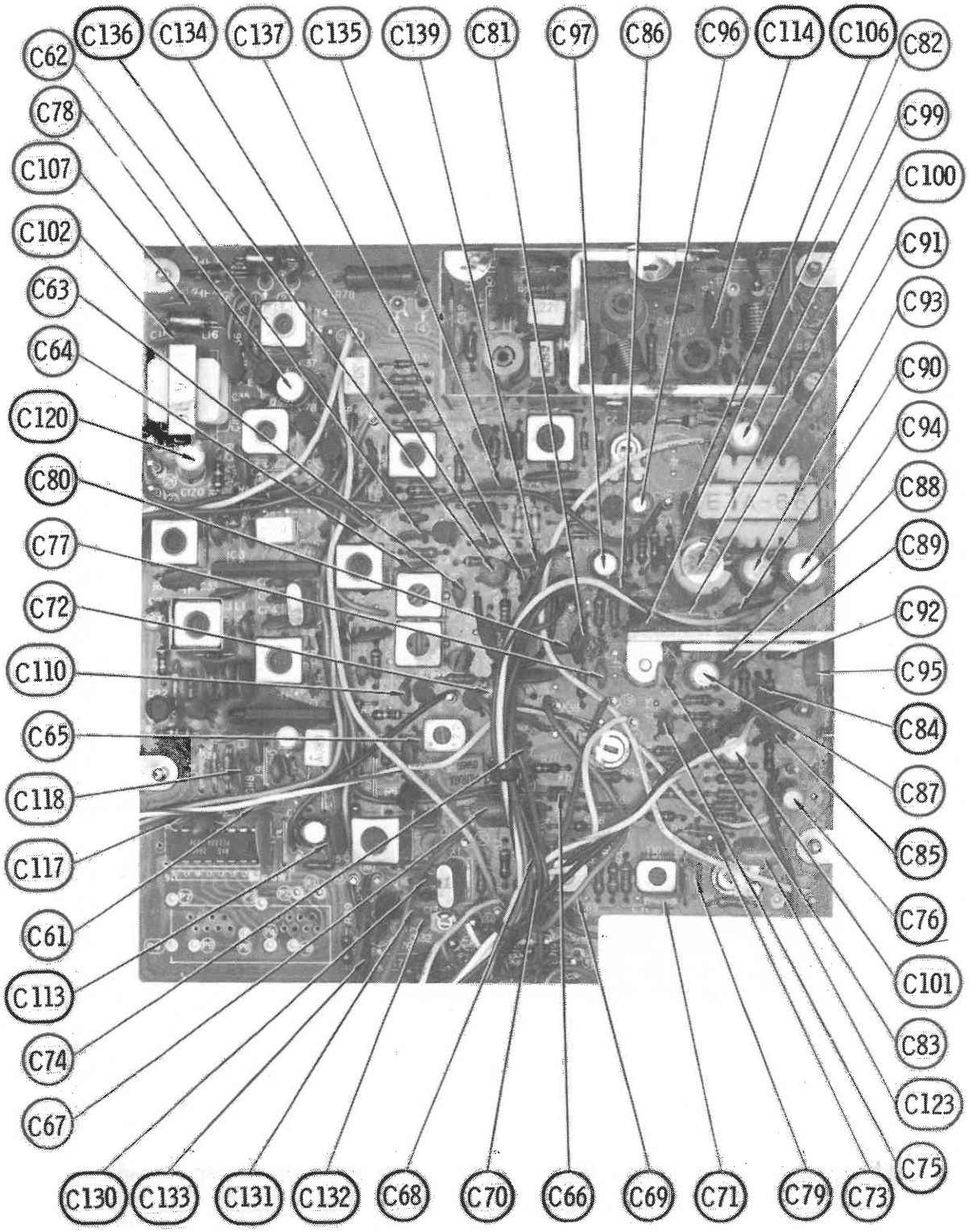
C136
C134
C137
C135
C139
C81
C97
C86
C96
C114
C106
C82
C62
C78
C107
C102
C63
C64
C120
C80
C77
C72
C110
C65
C118
C117
C61
C113
C74
C67
C99
C100
C91
C93
C90
C94
C88
C89
C92
C95
C84
C87
C85
C76
C101
C83
C123
C75
C130
C133
C131
C132
C68
C70
C66
C69
C71
C79
C73

MAIN BOARD

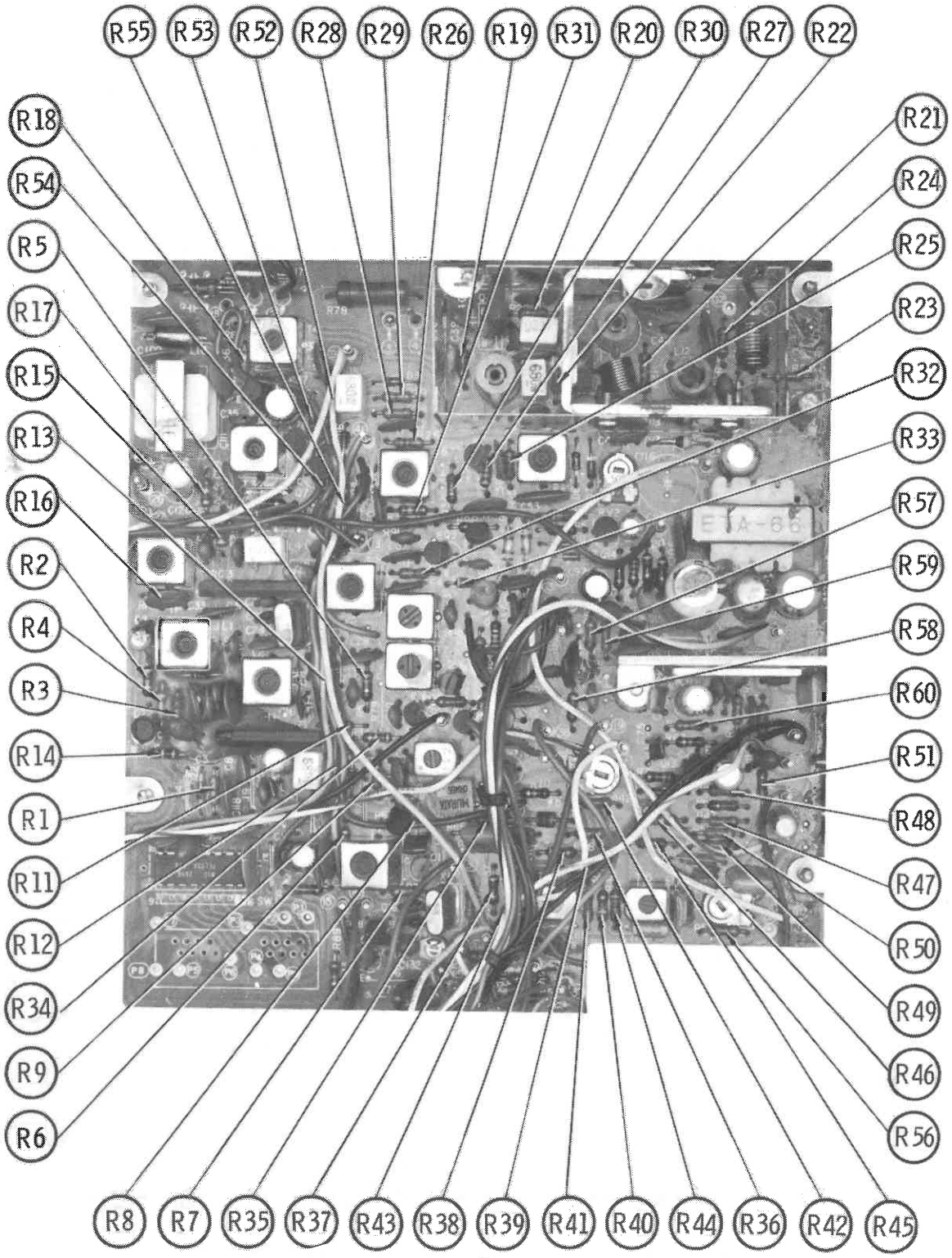
R55
R53
R52
R28
R29
R26
R19
R31
R20
R30
R27
R22
R18
R54
R5
R17
R15
R13
R16
R2
R4
R3
R14
R1
R11
R12
R34
R9
R6
R21
R24
R25
R23
R32
R33
R57
R59
R58
R60
R51
R48
R47
R50
R49
R46
R56
R8
R7
R35
R37
R43
R38
R39
R41
R40
R44
R36
R42
R45

MAIN BOARD

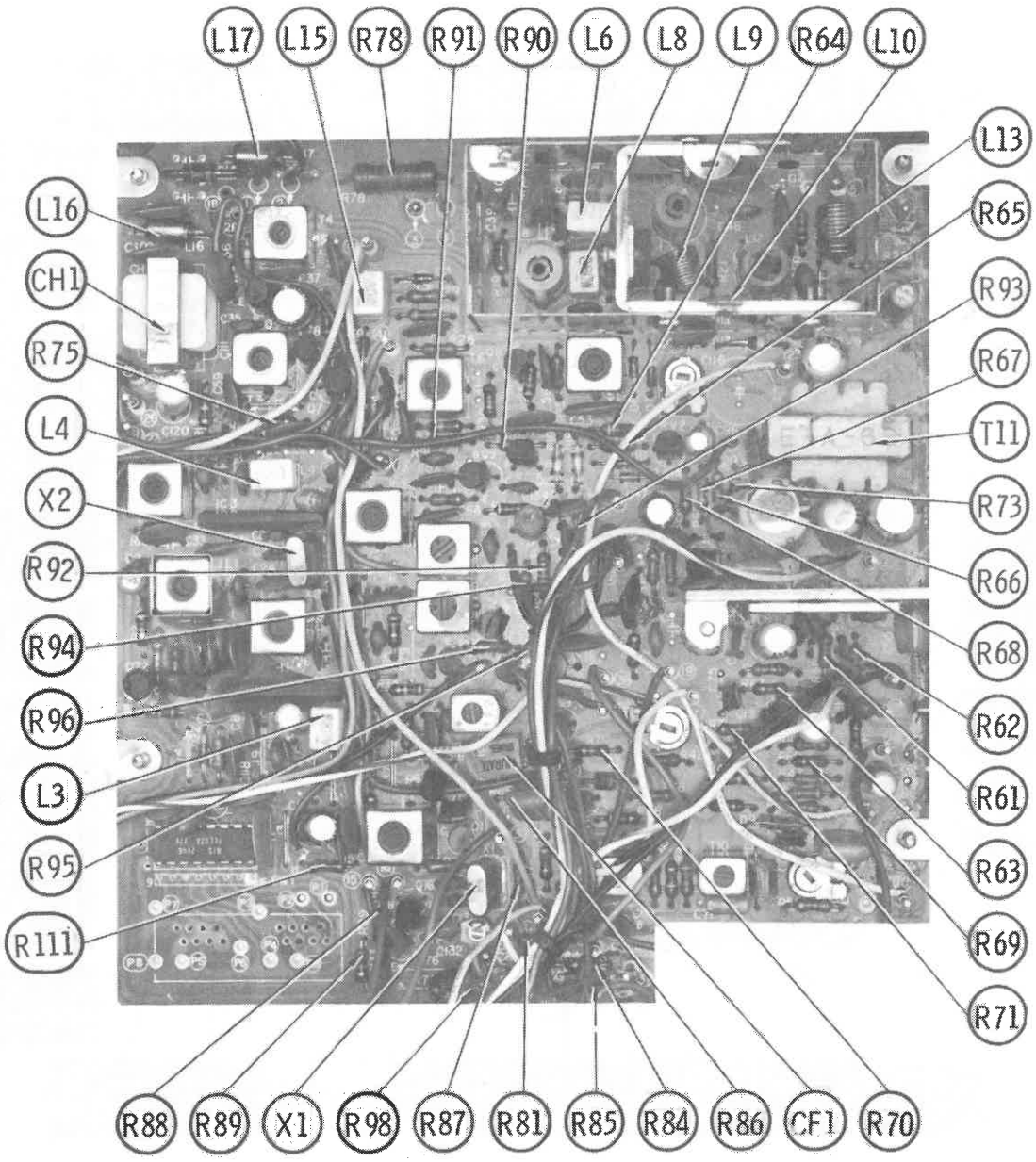
L17
L15
R78
R91
R90
L6
L8
L9
R64
L10
L13
R65
R93
R67
T11
R73
R66
R68
R62
R61
R63
R69
R71
L16
CH1
R75
L4
X2
R92
R94
R96
L3
R95
R111
R88
R89
X1
R98
R87
R81
R85
R84
R86
CF1
R70

MAIN BOARD

A Howard W. Sams CIRCUITRACE® Photo

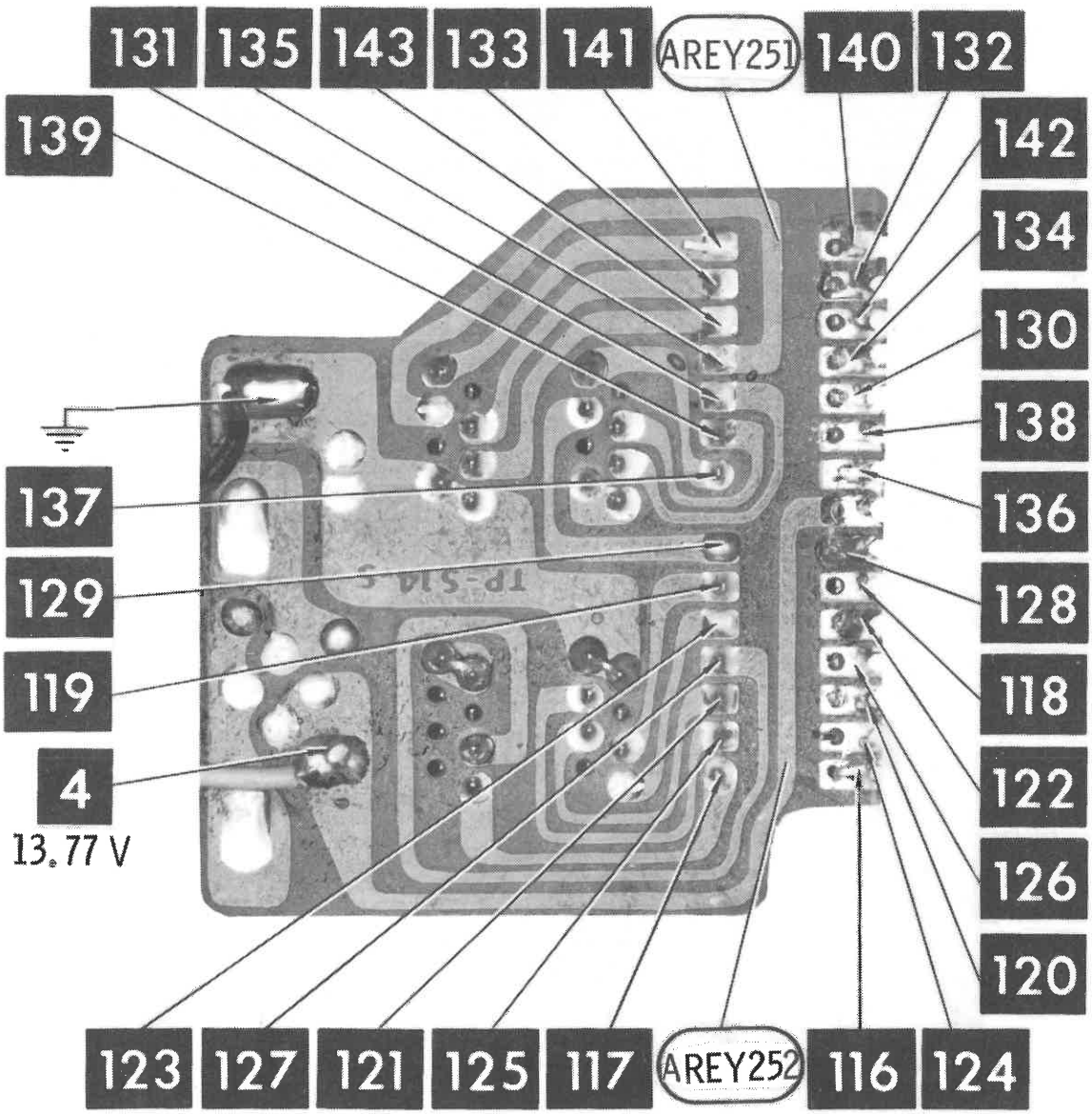

CH. SELECTOR BOARD

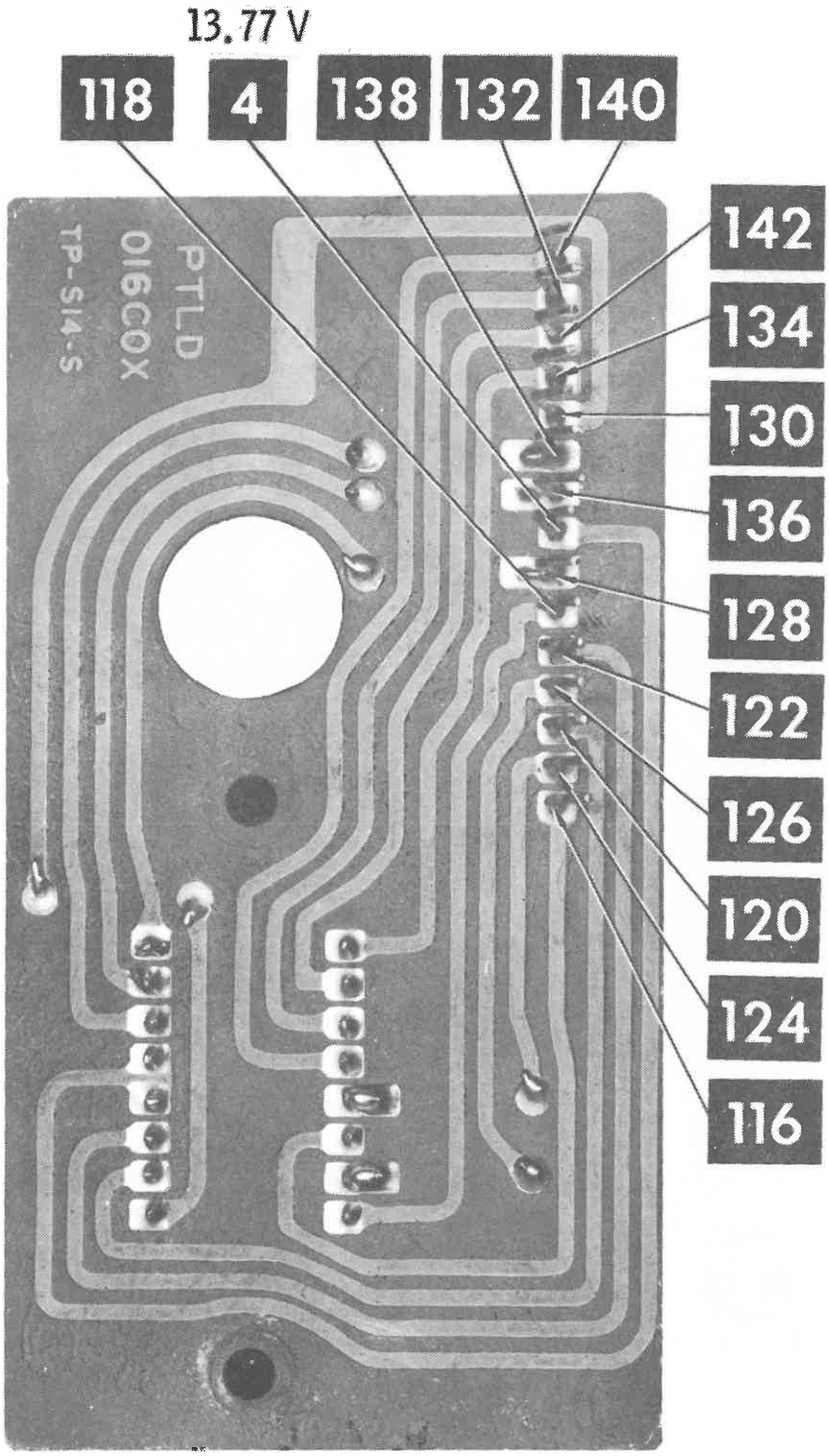

LED READOUT BOARD

A Howard W. Sams CIRCUITRACE® Photo

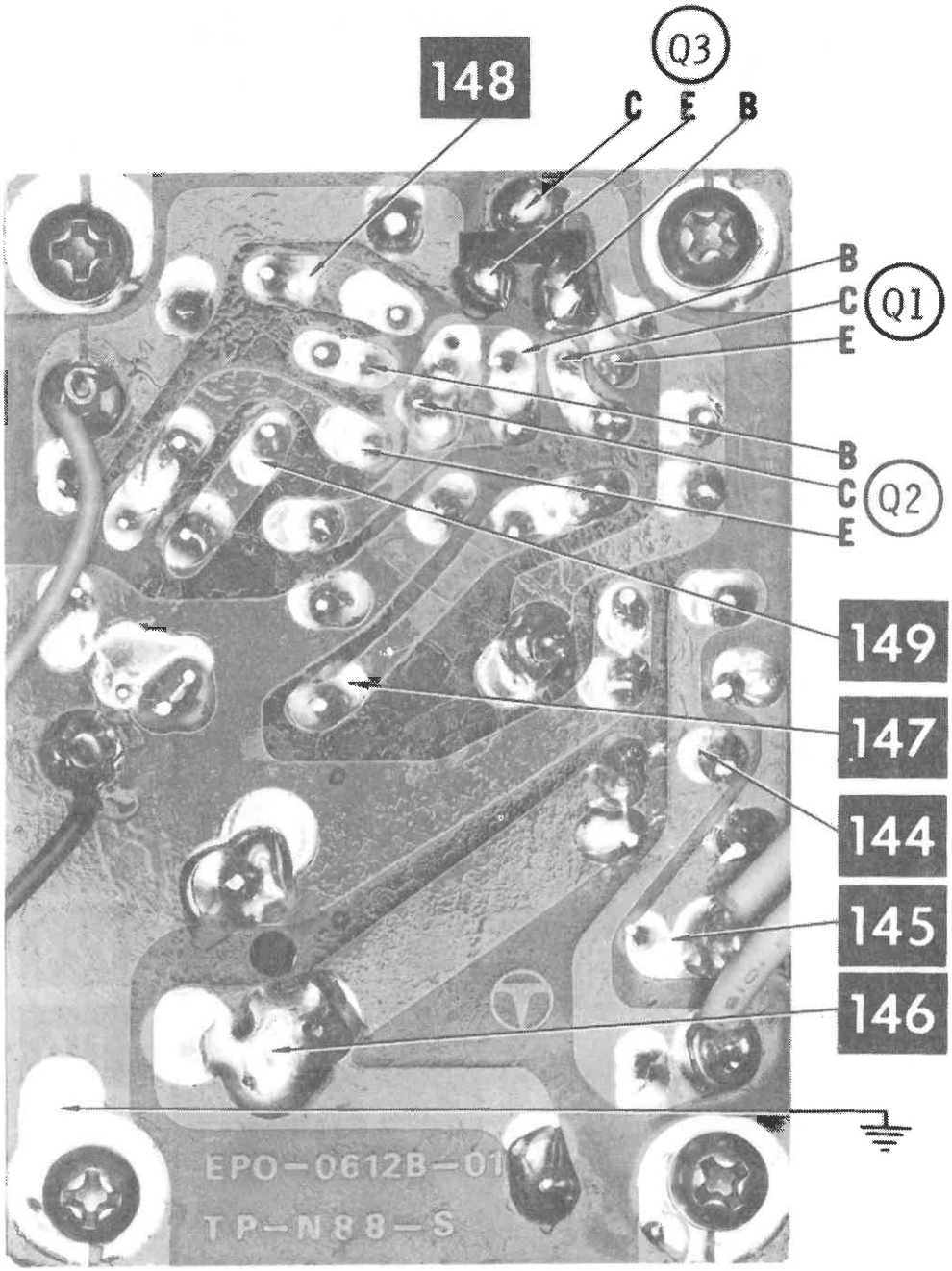

POWER SUPPLY BOARD

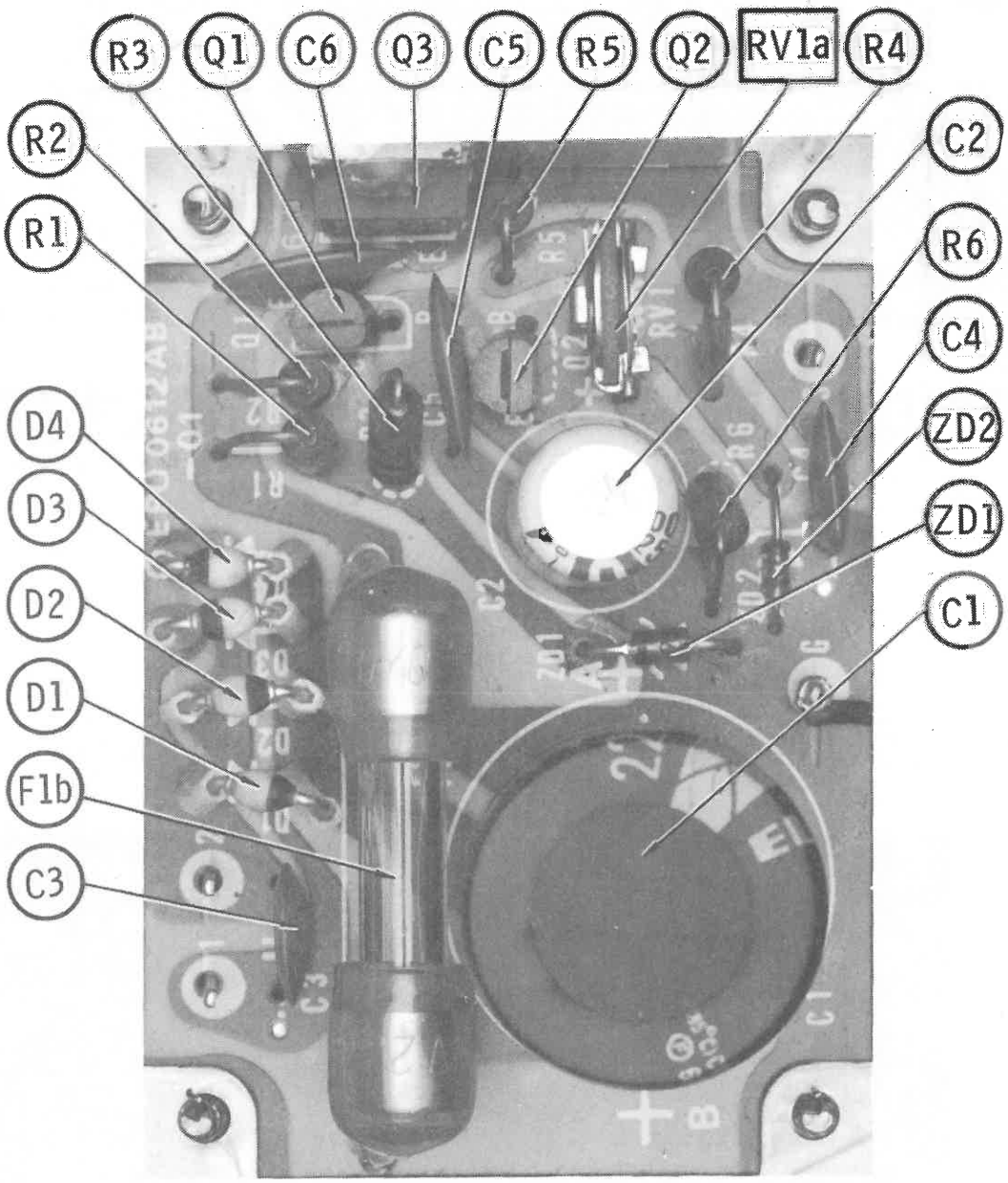

POWER SUPPLY BOARD

A Howard W. Sams CIRCUITRACE® Photo

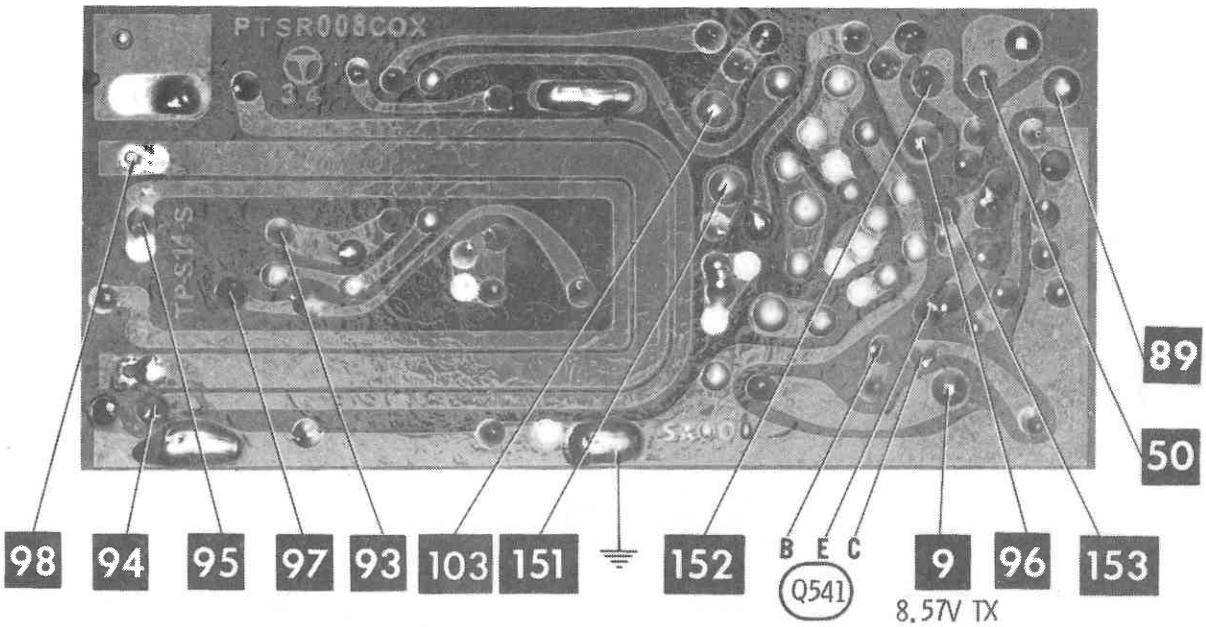

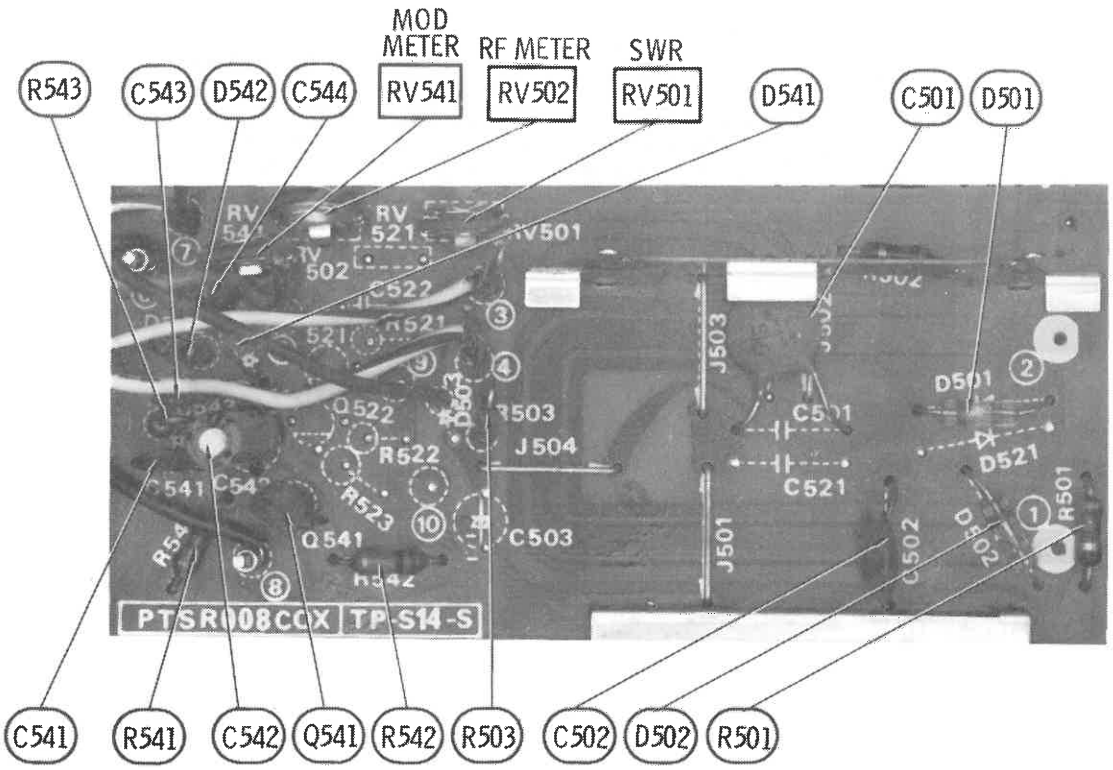

METER & SWR BOARD

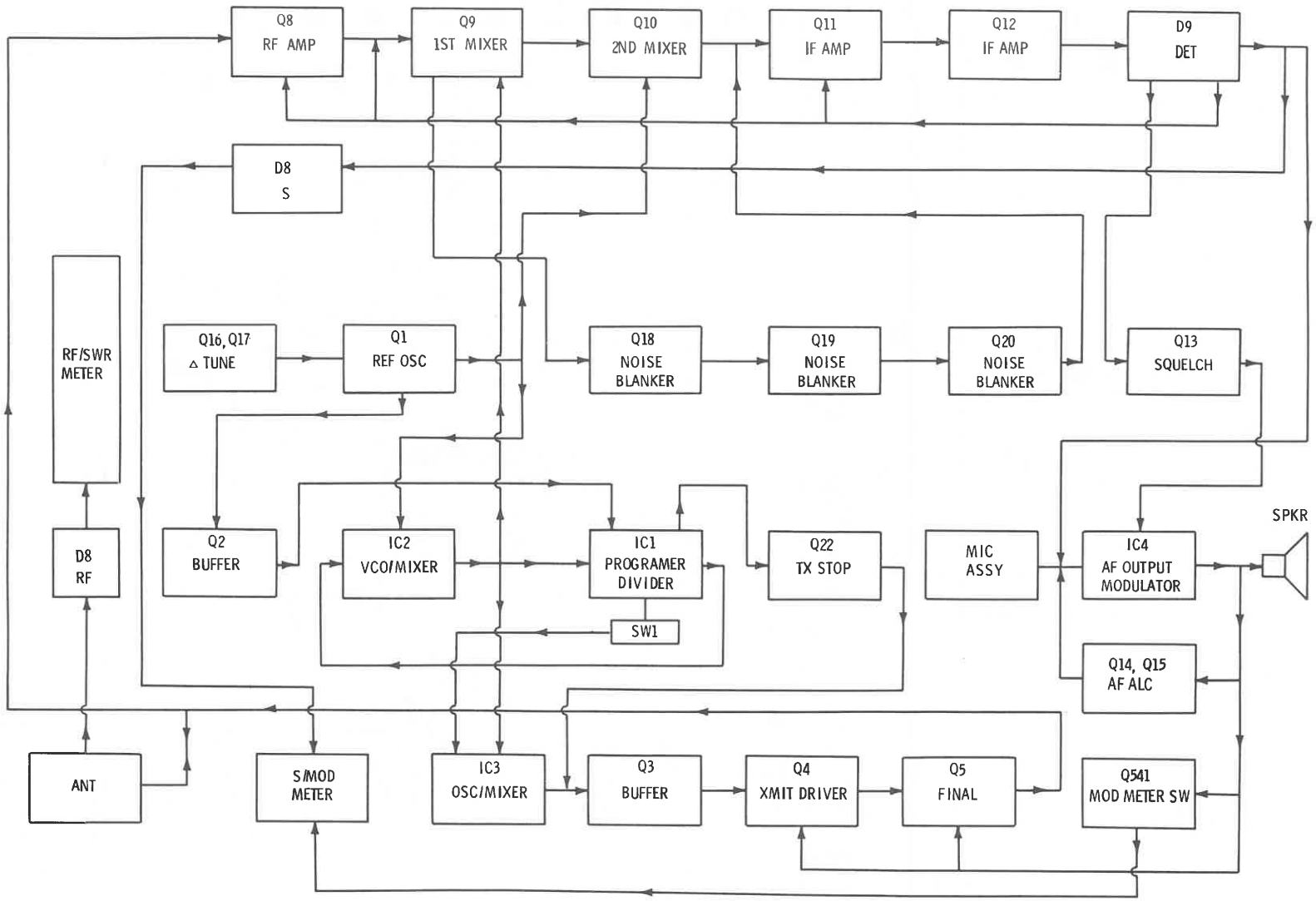

BLOCK DIAGRAM

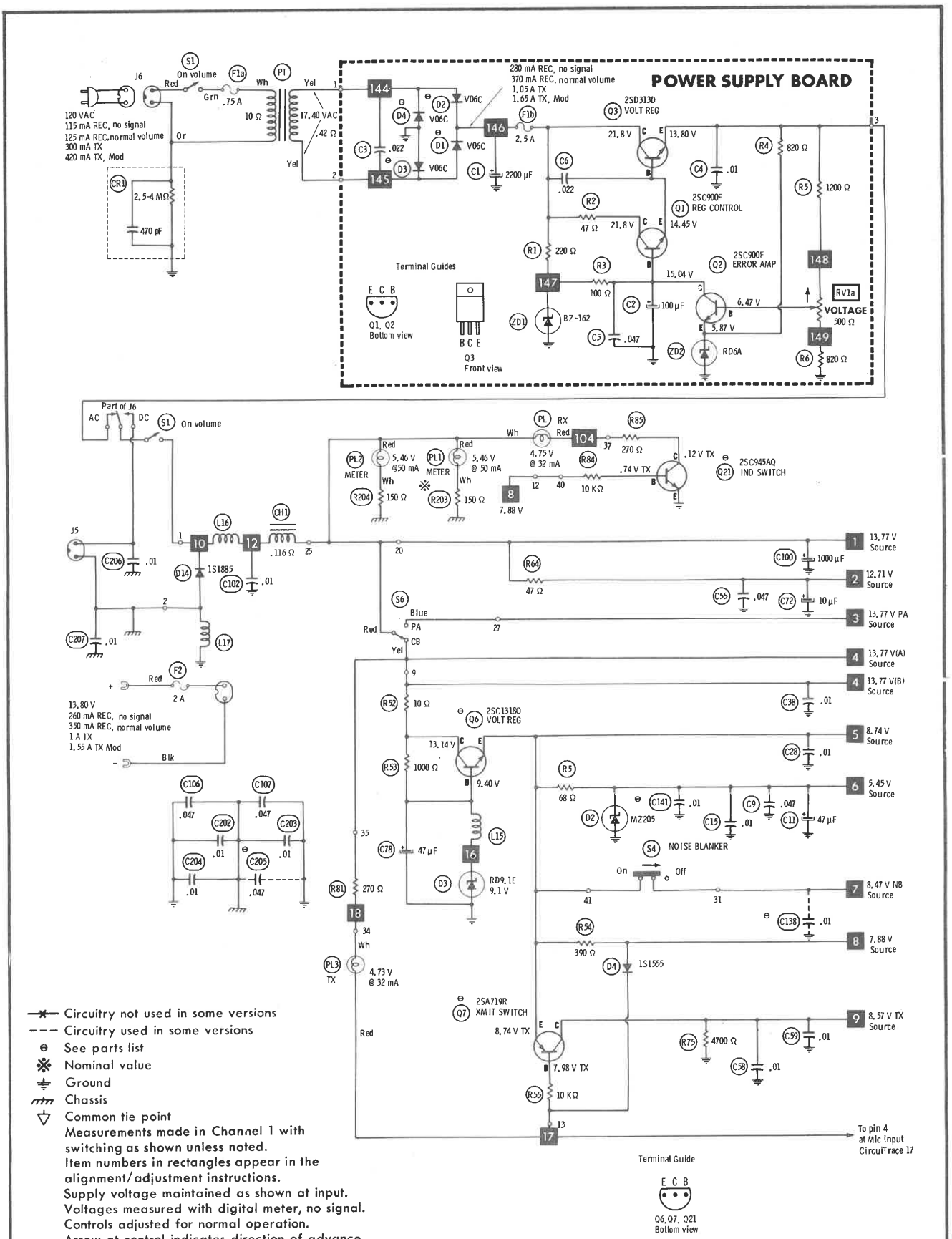

— Circuitry not used in some versions
- - - Circuitry used in some versions
⊖ See parts list
※ Nominal value
Ground
Chassis
Common tie point
Measurements made in Channel 1 with switching as shown unless noted.
Item numbers in rectangles appear in the alignment/adjustment instructions.
Supply voltage maintained as shown at input.
Voltages measured with digital meter, no signal.
Controls adjusted for normal operation.
Arrow at control indicates direction of advance.
Terminal identification may not be found on unit.
Resistors are 1/2W or less, 5% unless noted.
Value in ( ) used in some versions.

A PHOTOFACT STANDARD NOTATION SCHEMATIC WITH CIRCUITRACE®

© Howard W. Sams & Co., Inc. 1978

PARTS LIST AND DESCRIPTION

(When ordering parts, state Model, Part Number, and Description.)

WIRING DATA

General-use Hook-up Wire (available in 5 colors) BELDEN No. 8523
Shielded Hook-up Wire (spiral wrapped) . . . . . BELDEN No. 8421
(braided) . . . . . BELDEN No. 8401
Speaker Cable (available in 4 colors) . . . . . BELDEN No. 8782
Bonding Strap . . . . . BELDEN No. 8672
AC Power Cord . . . . . (6') BELDEN No. 17106
(9') BELDEN No. 17109

Coiled Microphone Cable
3-conductor (1 shielded) 23AWG BELDEN No. 9471 (5')
BELDEN No. 8497 (6')
BELDEN No. 9472 (7-1/2')
28AWG BELDEN No. 9466 (6')
31AWG BELDEN No. 9468 (10')
4-conductor (unshielded) 23AWG BELDEN No. 8415 (6')
5-conductor (1 shielded) 28AWG BELDEN No. 9467 (6')
BELDEN No. 9465 (7-1/2')

SEMICONDUCTORS (Select replacement transistor for best results)

ITEM No.	TYPE No.	MFGR. PART No.	REPLACEMENT DATA: GENERAL ELECTRIC PART No.	MALLORY PART No.	MOTOROLA PART No.	RAYTHEON PART No.	RCA PART No.	SPRAGUE PART No.	SYLVANIA PART No.	THORDARSON PART No.	WORKMAN PART No.	ZENITH PART No.
MAIN BOARD												
D1	ITT410	741689			HEPR2502	REN 612			ECG612			ZEN-452
	BB122				HEPR2502	REN 612			ECG612			ZEN-452
	MV201				HEPR2502	REN 612			ECG612			ZEN-452
D2	MZ205	741738	GEZD-5.1	ZM5.1B			SK3060	RT-235	ECG5010	1N4733A	WEP1411	103-279-10
D3	RD9.1E	741739	GEZD-9.1	ZB9.1B		REN 139	SK3060	RT-240	ECG139A	1N4739A	WEP1109	103-272
D4	1S1555	741741	GE-300	PTC214	HEPR0602	REN 177	SK3100	RT-218	ECG177		WEP1062	
D5	1N60	112524	1N60	PTC206	HEPR9135	REN 109	SK3088	RT-263	ECG109	1N60	WEP134	ZEN-430
D6	1S1555	741741	GE-300	PTC214	HEPR0602	REN 177	SK3100	RT-218	ECG177		WEP1062	
D7	1S1555	741741	GE-300	PTC214	HEPR0602	REN 177	SK3100	RT-218	ECG177		WEP1062	
D8	1N60	112524	1N60	PTC206	HEPR9135	REN 109	SK3088	RT-263	ECG109	1N60	WEP134	ZEN-430
D9	1N60	112524	1N60	PTC206	HEPR9135	REN 109	SK3088	RT-263	ECG109	1N60	WEP134	ZEN-430
D10	1S1555	741741	GE-300	PTC214	HEPR0602	REN 177	SK3100	RT-218	ECG177		WEP1062	
D11	1S1555	741741	GE-300	PTC214	HEPR0602	REN 177	SK3100	RT-218	ECG177		WEP1062	
D12	1S1555	741741	GE-300	PTC214	HEPR0602	REN 177	SK3100	RT-218	ECG177		WEP1062	
D13	VO6C	166593	GE-504A	PTC201	HEPR0052	REN 116	SK3030	RT-213	ECG116	1N4004	WEP156	212-76-02
D14	1S1885	741740	GE-504A	PTC201	HEPR0052	REN 116	SK3030	RT-213	ECG116	1N4004	WEP156	212-76-02
D15	1S1555	741741	GE-300	PTC214	HEPR0602	REN 177	SK3100	RT-218	ECG177		WEP1062	
D16	1S1555	741741	GE-300	PTC214	HEPR0602	REN 177	SK3100	RT-218	ECG177		WEP1062	
D17	1S1555	741741	GE-300	PTC214	HEPR0602	REN 177	SK3100	RT-218	ECG177		WEP1062	
D18	1N60	112524	1N60	PTC206	HEPR9135	REN 109	SK3088	RT-263	ECG109	1N60	WEP134	ZEN-430
D19	1N60	112524	1N60	PTC206	HEPR9135	REN 109	SK3088	RT-263	ECG109	1N60	WEP134	ZEN-430
D22	1S1555	741741	GE-300	PTC214	HEPR0602	REN 177	SK3100	RT-218	ECG177		WEP1062	
D501	1N60	112524	1N60	PTC206	HEPR9135	REN 109	SK3088	RT-263	ECG109	1N60	WEP134	ZEN-430
D502	1N60	112524	1N60	PTC206	HEPR9135	REN 109	SK3088	RT-263	ECG109	1N60	WEP134	ZEN-430
D541	1N60	112524	1N60	PTC206	HEPR9135	REN 109	SK3088	RT-263	ECG109	1N60	WEP134	ZEN-430
D542	1N60	112524	1N60	PTC206	HEPR9135	REN 109	SK3088	RT-263	ECG109	1N60	WEP134	ZEN-430
IC1	PLL02AG					REN 1167			ECG1233		WEP2007	
	PLL02A	741686				REN 1167			ECG1233		WEP2007	
	PLL02					REN 1167			ECG1167		WEP2007	
IC2	C3001A		GEIC-181				SK3487		ECG1192			
	C3001		GEIC-181				SK3487		ECG1192			
	TA7310P	742510	GEIC-181				SK3487		ECG1192			
IC3	C3001-0		GEIC-181				SK3487		ECG1192			
	C3001		GEIC-181				SK3487		ECG1192			
	TA7310P	742510	GEIC-181				SK3487		ECG1192			
IC4	TA7205P	741687	GEIC-179	PTC780		REN 1155	SK3231	TVCM-81	ECG1155	TA7205P	WEP949	
Q1	2SC710		GE-211*	PTC132	HEPS0016*	REN 123A*	SK3444	RT-308*	ECG123A*	2SC710	WEP710	121-Z9000*
Q2	2SC710		GE-211*	PTC132	HEPS0016*	REN 123A*	SK3444	RT-308*	ECG123A*	2SC710	WEP710	121-Z9000*
	2SC710D,E	742544	GE-211*	PTC132	HEPS0016*	REN 123A*	SK3444	RT-308*	ECG123A*	2SC710	WEP710	121-Z9000*
Q3	2SC1678	741731	GE-322	PTC186		REN 235	SK3197	RT-146	ECG235	2SC1306	WEP785	
Q4	2SC1760		GE-276	PTC180		REN 306	SK3197	RT-310	ECG306		WEP771	
	2SC1846		GE-336	PTC904		REN 295	SK3253		ECG295	2SC496	WEP913	800-767
	2SC2036		GE-336			REN 295	SK3518		ECG306	2SC1018	WEP771	
	2SC1360	742537	GE-11	PTC115*	HEPS0016*	REN 107	SK3132	RT-308	ECG107	2SC380	WEP535	
Q5	2SC1678		GE-322	PTC186		REN 235	SK3197	RT-146	ECG235	2SC1306	WEP785	
	2SC1306	741732	GE-215	PTC186		REN 235	SK3197	RT-146	ECG235	2SC1306	WEP785	
	2SC2075		GE-215	PTC186		REN 235	SK3197	RT-146	ECG235		WEP785	
	2SC1974		GE-337	PTC186		REN 235	SK3197	RT-146	ECG235	2SC1306	WEP785	
Q6	2SC1318Q		GE-210*	PTC123	HEPS0015*	REN 128	SK3122	RT-302	ECG297		WEP59*	121-722
	2SC1318	741856	GE-210*	PTC123	HEPS0015*	REN 128	SK3122	RT-302	ECG297		WEP59*	121-722
Q7	2SA719R		GE-269	PTC103*	HEPS0019*	REN 290	SK3114	RT-305	ECG290	2SA562	WEP911	121-879
	2SA719		GE-269	PTC103*	HEPS0019*	REN 290	SK3114	RT-305	ECG290	2SA562	WEP911	121-879
	2SA720		GE-272	PTC103*	HEPS0019*	REN 298	SK3450	RT-305	ECG298		WEP915*	121-879*
	2SA719P, Q,R	742546	GE-269	PTC103*	HEPS0019*	REN 290	SK3114	RT-305	ECG290	2SA562	WEP911	121-879
Q8	2SC1047B		GE-60*	PTC132*	HEPS0016*	REN 229*	SK3018*	RT-107	ECG229*	2SC535	WEP63*	ZEN-109
	2SC1047		GE-60*	PTC132*	HEPS0016*	REN 229*	SK3018*	RT-107	ECG229*	2SC535	WEP63*	ZEN-109
	2SC710		GE-211*	PTC132	HEPS0016*	REN 123A*	SK3444	RT-308*	ECG123A*	2SC710	WEP710	121-Z9000*
	2SC460		GE-61*	PTC136*	HEPS0014*	REN 107	SK3122	RT-134	ECG107	2SC460	WEP460	121-722
	2SC1047B,C		GE-60*	PTC132*	HEPS0016*	REN 229*	SK3018*	RT-107	ECG229*	2SC535	WEP63*	ZEN-109
Q9	2SC1359B		GE-212	PTC121*	HEPS0014*	REN 199	SK3122	RT-308	ECG229*	2SC930	WEP66	121-Z9000
	2SC1359		GE-212	PTC121*	HEPS0014*	REN 199	SK3122	RT-308	ECG229*	2SC930	WEP66	121-Z9000
	2SC710		GE-211*	PTC132	HEPS0016*	REN 123A*	SK3444	RT-308*	ECG123A*	2SC710	WEP710	121-Z9000*
	2SC1359B,C	742548	GE-212	PTC121*	HEPS0014*	REN 199	SK3122	RT-308	ECG229*	2SC930	WEP66	121-Z9000
Q10	2SC710		GE-211*	PTC132	HEPS0016*	REN 123A*	SK3444	RT-308*	ECG123A*	2SC710	WEP710	121-Z9000*
	2SC710D	741726	GE-211*	PTC132	HEPS0016*	REN 123A*	SK3444	RT-308*	ECG123A*	2SC710	WEP710	121-Z9000*
	2SC829		GE-20*	PTC139*	HEPS0015*	REN 123A	SK3444	RT-308	ECG229*	2SC829	WEP829	121-Z9000*
	2SC839		GE-61*	PTC132*	HEPS0015*	REN 123A*	SK3444	RT-308	ECG123A*	2SC839	WEP736*	121-Z9000*
Q11	2SC710		GE-211*	PTC132	HEPS0016*	REN 123A*	SK3444	RT-308*	ECG123A*	2SC710	WEP710	121-Z9000*
	2SC710D	741726	GE-211*	PTC132	HEPS0016*	REN 123A*	SK3444	RT-308*	ECG123A*	2SC710	WEP710	121-Z9000*
	2SC829		GE-20*	PTC139*	HEPS0015*	REN 123A	SK3444	RT-308	ECG229*	2SC829	WEP829	121-Z9000*
Q12	2SC829B		GE-20*	PTC139*	HEPS0015*	REN 123A	SK3444	RT-308	ECG229*	2SC829	WEP829	121-Z9000*
	2SC829B,C	742549	GE-20*	PTC139*	HEPS0015*	REN 123A	SK3444	RT-308	ECG229*	2SC829	WEP829	121-Z9000*
	2SC710		GE-211*	PTC132	HEPS0016*	REN 123A*	SK3444	RT-308*	ECG123A*	2SC710	WEP710	121-Z9000*
	2SC829		GE-20*	PTC139*	HEPS0015*	REN 123A	SK3444	RT-308	ECG229*	2SC829	WEP829	121-Z9000*
Q13	2SC838P	741737	GE-61*	PTC139*	HEPS0015*	REN 199	SK3444	RT-302	ECG199	2SC828	WEP828	ZEN-119
	2SC828		GE-61*	PTC139*	HEPS0015*	REN 199	SK3444	RT-302	ECG199	2SC828	WEP828	ZEN-119
	2SC945		GE-212	PTC121*	HEPS0015*	REN 199	SK3124	RT-107A	ECG199	2SC945	WEP1945	121-Z9000
	2SC372		GE-61*	PTC121*	HEPS0015*	REN 123A*	SK3444	RT-308	ECG123A*	2SC372	WEP372	121-Z9000*
Q14	2SA719Q	741729	GE-269	PTC103*	HEPS0019*	REN 290	SK3114	RT-305	ECG290	2SA562	WEP911	121-879
	2SA719		GE-269	PTC103*	HEPS0019*	REN 290	SK3114	RT-305	ECG290	2SA562	WEP911	121-879
	2SA720		GE-272	PTC103*	HEPS0019*	REN 298	SK3450	RT-305	ECG298		WEP915*	121-879*
	2SA564		GE-65	PTC103*	HEPS0019*	REN 234	SK3114	RT-303	ECG234	2SA564	WEP564	121-879
Q15	2SC945L		GE-212	PTC121*	HEPS0015*	REN 199	SK3124	RT-107A	ECG199	2SC945	WEP1945	121-Z9000
	2SC945L, P,-O	742512	GE-212	PTC121*	HEPS0015*	REN 199	SK3124	RT-107A	ECG199	2SC945	WEP1945	121-Z9000
	2SC945		GE-212	PTC121*	HEPS0015*	REN 199	SK3124	RT-107A	ECG199	2SC945	WEP1945	121-Z9000
	2SC900		GE-62	PTC139*	HEPS0015*	REN 199	SK3124	RT-302	ECG199	2SC900	WEP66	ZEN-119

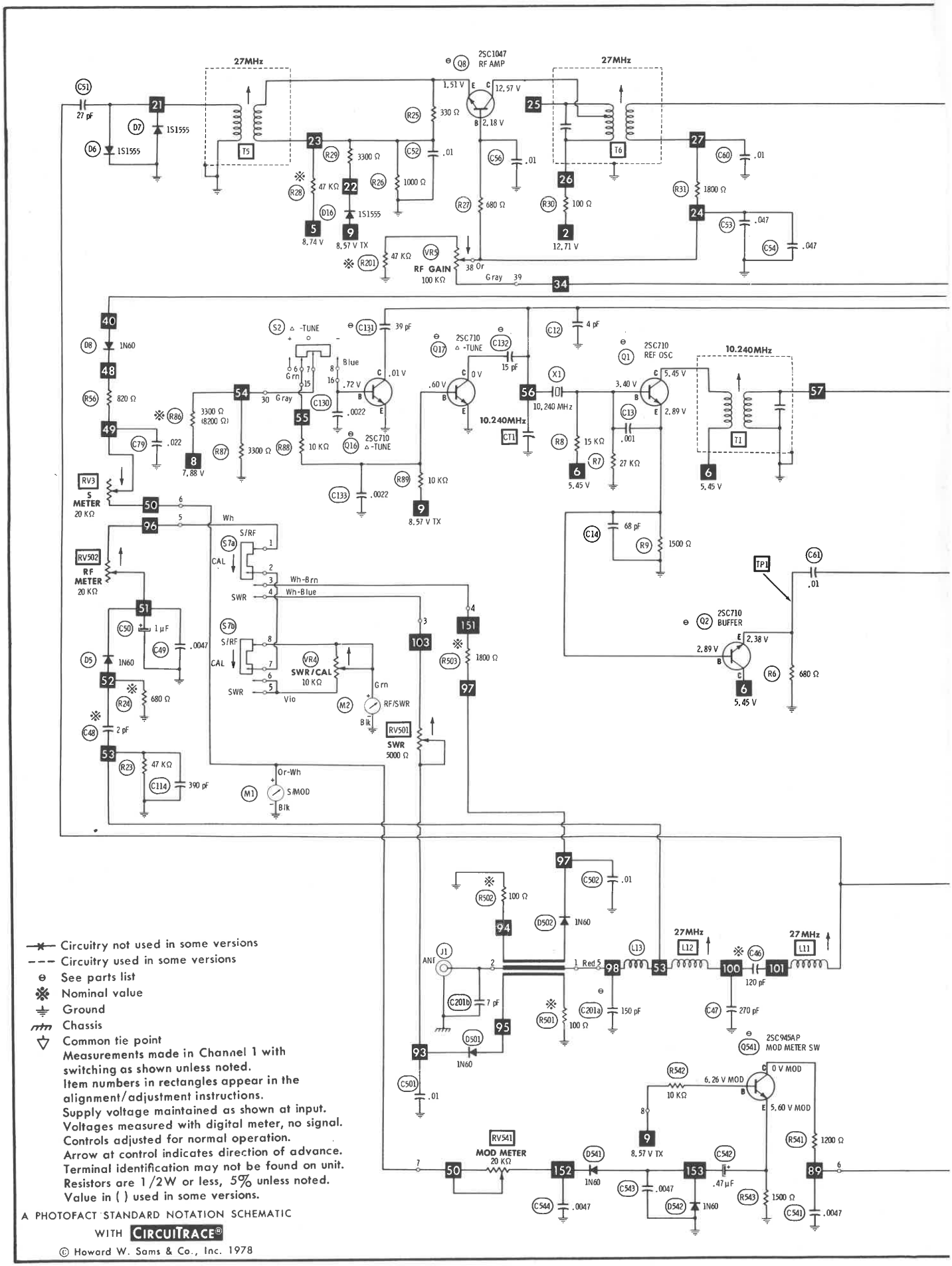

Circuitry not used in some versions
Circuitry used in some versions
See parts list
Nominal value
Ground
Chassis
Common tie point
Measurements made in Channel 1 with switching as shown unless noted.
Item numbers in rectangles appear in the alignment/adjustment instructions.
Supply voltage maintained as shown at input.
Voltages measured with digital meter, no signal.
Controls adjusted for normal operation.
Arrow at control indicates direction of advance.
Terminal identification may not be found on unit.
Resistors are 1/2W or less, 5% unless noted.
Value in ( ) used in some versions.

A PHOTOFACT STANDARD NOTATION SCHEMATIC WITH CIRCUITRACE®

© Howard W. Sams & Co., Inc. 1978

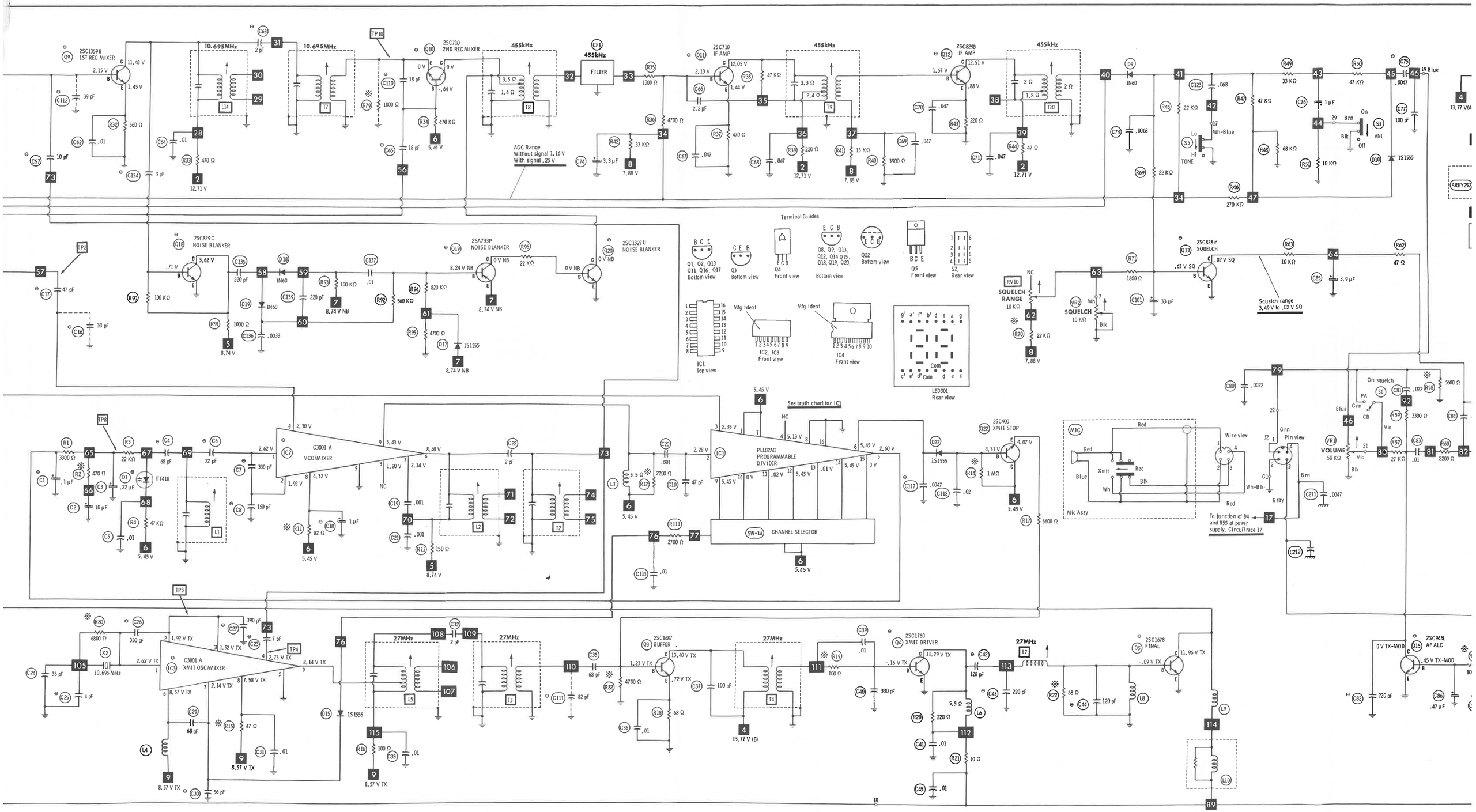
2SC1359B 1ST REC MIXER
10.695MHz
2SC710 2ND REC MIXER
455kHz
FILTER
AGC Range Without signal 1.16 V With signal .25 V
2SC710 IF AMP
2SC829B IF AMP
1N60
1S1555
ANL
TONE
2SC829C NOISE BLANKER
2SA733P NOISE BLANKER
2SC1327U NOISE BLANKER
2SC828 P SQUELCH
Squelch range 3.49 V to .02 V SQ
SQUELCH RANGE 10 KΩ
SQUELCH 10 KΩ
Terminal Guides
Q1, Q2, Q10 Q11, Q16, Q17 Bottom view
Q3 Bottom view
Q4 Front view
Q8, Q9, Q13, Q12, Q14 Q15, Q18, Q19, Q20, Bottom view
Q22 Bottom view
Q5 Front view
S2, Rear view
IC1 Top view
Mfg Ident
IC2, IC3 Front view
IC4 Front view
LED301 Rear view
See truth chart for IC1
C3001 A VCO/MIXER
PLL02AG PROGRAMMABLE DIVIDER
CHANNEL SELECTOR
2SC900 XMIT STOP
Mic Assy
Wire view
Pin view
To junction of D4 and R55 at power supply, CircuitTrace 17
VOLUME 50 KΩ
On squelch
2SC945L AF ALC
C3001 A XMIT OSC/MIXER
10.695 MHz
27MHz
2SC1687 BUFFER
2SC1760 XMIT DRIVER
2SC1678 FINAL
13.77 VIA
13.77 V (B)
AREY252

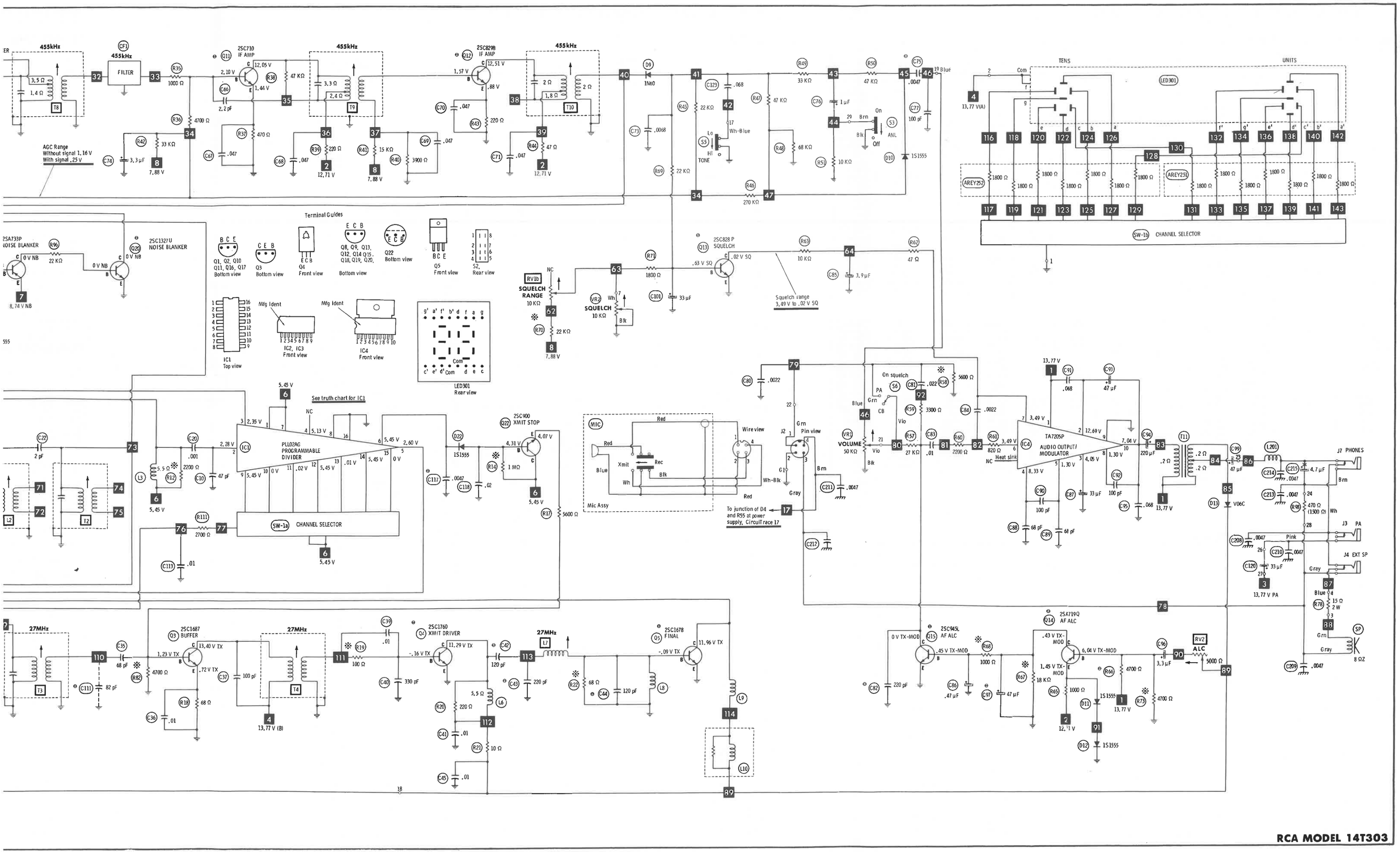

RCA MODEL 14T303

SEMICONDUCTORS (Select replacement transistor for best results) (cont)

ITEM No.	TYPE No.	MFGR. PART No.	REPLACEMENT DATA									
			GENERAL ELECTRIC PART No.	MALLORY PART No.	MOTOROLA PART No.	RAYTHEON PART No.	RCA PART No.	SPRAGUE PART No.	SYLVANIA PART No.	THORDARSON PART No.	WORKMAN PART No.	ZENITH PART No.
Q16	2SC710		GE-211*	PTC132	HEPS0016*	REN 123A*	SK3444	RT-308*	ECG123A*	2SC710	WEP710	121-Z9000*
	2SC710D,E	74544	GE-211*	PTC132	HEPS0016*	REN 123A*	SK3444	RT-308*	ECG123A*	2SC710	WEP710	121-Z9000*
	2SC829		GE-20*	PTC139*	HEPS0015*	REN 123A	SK3444	RT-308	ECG229*	2SC829	WEP829	121-Z9000*
	2SC839		GE-61*	PTC132*	HEPS0015*	REN 123A*	SK3444	RT-308	ECG123A*	2SC839	WEP736*	121-Z9000*
Q17	2SC710		GE-211*	PTC132	HEPS0016*	REN 123A*	SK3444	RT-308*	ECG123A*	2SC710	WEP710	121-Z9000*
	2SC710D,E	742544	GE-211*	PTC132	HEPS0016*	REN 123A*	SK3444	RT-308*	ECG123A*	2SC710	WEP710	121-Z9000*
	2SC829		GE-20*	PTC139*	HEPS0015*	REN 123A	SK3444	RT-308	ECG229*	2SC829	WEP829	121-Z9000*
	2SC839		GE-61*	PTC132*	HEPS0015*	REN 123A*	SK3444	RT-308	ECG123A*	2SC839	WEP736*	121-Z9000*
Q18	2SC829C	166906	GE-20*	PTC139*	HEPS0015*	REN 123A	SK3444	RT-308	ECG229*	2SC829	WEP829	121-Z9000*
	2SC829		GE-61*	PTC132*	HEPS0015*	REN 123A*	SK3444	RT-308	ECG123A*	2SC839	WEP736*	121-Z9000*
Q19	2SA733P		GE-48	PTC127	HEPS0019*	REN 294	SK3138	RT-303	ECG294	2SA733	WEP916	121-933
	2SA733P,Q	742008	GE-48	PTC127	HEPS0019*	REN 294	SK3138	RT-303	ECG294	2SA733	WEP916	121-933
	2SA733		GE-48	PTC127	HEPS0019*	REN 294	SK3138	RT-303	ECG294	2SA733	WEP916	121-933
Q20	2SC1327U		GE-85*	PTC139*	HEPS0024*	REN 199	SK3245	RT-107A	ECG199	2SC900	WEP66	121-972
	2SC1327T,U	742550	GE-85*	PTC139*	HEPS0024*	REN 199	SK3245	RT-107A	ECG199	2SC900	WEP66	121-972
	2SC1327		GE-85*	PTC139*	HEPS0024*	REN 199	SK3245	RT-107A	ECG199	2SC900	WEP66	121-972
	2SC900		GE-62	PTC139*	HEPS0015*	REN 199	SK3124	RT-302	ECG199	2SC900	WEP66	ZEN-119
Q21	2SC945AQ		GE-212	PTC121*	HEPS0015*	REN 199	SK3124	RT-107A	ECG199	2SC945	WEP1945	121-Z9000
	2SC945R,Q	742558	GE-212	PTC121*	HEPS0015*	REN 199	SK3124	RT-107A	ECG199	2SC945	WEP1945	121-Z9000
	2SC945		GE-212	PTC121*	HEPS0015*	REN 199	SK3124	RT-107A	ECG199	2SC945	WEP1945	121-Z9000
	2SC828		GE-61*	PTC139*	HEPS0015*	REN 199	SK3444	RT-302	ECG199	2SC828	WEP828	ZEN-119
Q22	2SC900E		GE-62	PTC139*	HEPS0015*	REN 199	SK3124	RT-302	ECG199	2SC900	WEP66	ZEN-119
	2SC900U	742513	GE-62	PTC139*	HEPS0015*	REN 199	SK3124	RT-302	ECG199	2SC900	WEP66	ZEN-119
	2SC900		GE-62	PTC139*	HEPS0015*	REN 199	SK3124	RT-302	ECG199	2SC900	WEP66	ZEN-119
Q541	2SC945AP	742703	GE-212	PTC121*	HEPS0015*	REN 199	SK3124	RT-107A	ECG199	2SC945	WEP1945	121-Z9000
	2SC945		GE-212	PTC121*	HEPS0015*	REN 199	SK3124	RT-107A	ECG199	2SC945	WEP1945	121-Z9000
	2SC828		GE-61*	PTC139*	HEPS0015*	REN 199	SK3444	RT-302	ECG199	2SC828	WEP828	ZEN-119
POWER SUPPLY BOARD												
D1	V06C											
	F14A		GE-504A	PTC201	HEPR0052	REN 116	SK3030	RT-213	ECG116	1N4004	WEP156	212-76-02
	1S1885		GE-504A	PTC201	HEPR0052	REN 116	SK3030	RT-213	ECG116	1N4004	WEP156	212-76-02
D2	V06C		GE-504A	PTC201	HEPR0052	REN 116	SK3030	RT-213	ECG116	1N4004	WEP156	212-76-02
	F14A		GE-504A	PTC201	HEPR0052	REN 116	SK3030	RT-213	ECG116	1N4004	WEP156	212-76-02
	1S1885		GE-504A	PTC201	HEPR0052	REN 116	SK3030	RT-213	ECG116	1N4004	WEP156	212-76-02
D3	V06C		GE-504A	PTC201	HEPR0052	REN 116	SK3030	RT-213	ECG116	1N4004	WEP156	212-76-02
	F14A		GE-504A	PTC201	HEPR0052	REN 116	SK3030	RT-213	ECG116	1N4004	WEP156	212-76-02
	1S1885		GE-504A	PTC201	HEPR0052	REN 116	SK3030	RT-213	ECG116	1N4004	WEP156	212-76-02
D4	V06C		GE-504A	PTC201	HEPR0052	REN 116	SK3030	RT-213	ECG116	1N4004	WEP156	212-76-02
	F14A		GE-504A	PTC201	HEPR0052	REN 116	SK3030	RT-213	ECG116	1N4004	WEP156	212-76-02
	1S1885		GE-504A	PTC201	HEPR0052	REN 116	SK3030	RT-213	ECG116	1N4004	WEP156	212-76-02
Q1	2SC900F		GE-504A	PTC201	HEPR0052	REN 116	SK3030	RT-213	ECG116	1N4004	WEP156	212-76-02
	2SC900		GE-62	PTC139*	HEPS0015*	REN 199	SK3124	RT-302	ECG199	2SC900	WEP66	ZEN-119
Q2	2SC900F		GE-62	PTC139*	HEPS0015*	REN 199	SK3124	RT-302	ECG199	2SC900	WEP66	ZEN-119
	2SC900		GE-62	PTC139*	HEPS0015*	REN 199	SK3124	RT-302	ECG199	2SC900	WEP66	ZEN-119
Q3	2SD313D		GE-62	PTC139*	HEPS0015*	REN 199	SK3124	RT-302	ECG199	2SC900	WEP66	ZEN-119
	2SD313		GE-241	PTC154		REN 196	SK3054	RT-154	ECG196	2SC1061	WEP756	
ZD1	BZ-162		GE-241	PTC154		REN 196	SK3054	RT-154	ECG196	2SC1061	WEP756	
ZD2	RD6A		GEZD-16	ZB16B		REN 5075		RT-246	ECG5075A	1N4745A	WEP1160	
			GEZD-6.0			REN 5070			ECG5070A		WEP1153	

* Lead configuration may vary from original.

ELECTROLYTIC CAPACITORS

ITEM No.	RATING	REPLACEMENT DATA				
		MFGR. PART No.	CORNELL-DUBILIER PART No.	MALLORY PART No.	SPRAGUE PART No.	
					Q-LINE	GENERAL LINE
MAIN BOARD						
C1	.1 10V	742688		TDC104M050EL	QDT1-2	SD50-R109
C2	10 16V	742072	PC10-25	VTT10B25	QV1-41	EV-1222
C3	.22 10V	742553		TDC224M050EL	QDT1-10	SD50-R229
C11	47 10V	742077	PC50-16	VTT47D16	QV1-73	EV-1226
C18	1 50V	742076	PC1-50	VTT1A50	QV1-11	EV-1615
C50	1 50V	742076	PC1-50	VTT1A50	QV1-11	EV-1615
C72	10 16V	742068	PC10-25	VTT10B25	QV1-41	EV-1222
C74	3.3 25V	166477	PC5-50	VTT3R3A50	QV1-23	EV-1318
C76	1 50V	742076	PC1-50	VTT1A50	QV1-11	EV-1615
C78	47 16V	742079	PC50-16	VTT47D16	QV1-73	EV-1226
C85	3.9 25V	741793		TDC475M010EL	QDT1-48	SD10-4R79
C86	.47 10V	742584		TDC474M050EL	QDT1-19	SD50-R479
C87	33 6.3V	741794	PC30-25	VTT33B10	QV1-61	EV-1125
C93	47 16V		PC50-16	VTT47D16	QV1-73	EV-1226
C94	220 16V	741797	PC250-25	VTT220H16	QV1-117	EV-1240
C96	3.3 25V	166477	PC5-50	VTT3R3A50	QV1-23	EV-1318
C97	47 10V	742077	PC50-16	VTT47D16	QV1-73	EV-1226
C99	47 25V	742081	PC50-25	VTT47E25	QV1-75	EV-1326
C100	1000 16V	742080	PC1000-16	VTT1000L16	QV1-183	EV-1260
C101	33 6.3V	741794	PC30-25	VTT33B10	QV1-61	EV-1125
C113	1 50V	742076(1)	PC1-50	VTT1A50	QV1-11	EV-1615
C120	33 16V	742085	PC30-25	VTT33D25	QV1-63	EV-1325
C215	4.7 16V		PC5-50	VTT4R7B50	QV1-27	EV-1319
C542	.47 50V	436354	PC1-50	VTTR47A63	QV1-3	EV-1610
POWER SUPPLY BOARD						
C1	2200 25V	742697	WBR2000-25	TC2520A	QE1-645	TVA-1213.5
C2	100 25V	436943	PC100-25	VTT100G25	QV1-97	EV-1330

(1) Used in models with Serial Numbers 16000001 thru 16008001.

CAPACITORS

ITEM No.	RATING	MFGR. PART No.	REPLACEMENT DATA				
			CENTRALAB PART No.	CORNELL-DUBILIER PART No.	MALLORY PART No.	SPRAGUE PART No.	
						Q-LINE	GENERAL LINE
MAIN BOARD							
C4	68 N150 10%	741788			*		10TCP-Q68
C5	.01		DC-103	MGP01	TA110	QC2-141	TG-S10
C6	22 N150 10%	741807			*		10TCP-Q22
C7	220	(1)	DD-221		GP322		10TS-T22
	330	(2)	DD-331	GP330	GP333		10TS-T33
C8	120	(1)	DTZ-120		CN0312		10TCC-T12
	150	(2)	DD-151		GP315		10TS-T15
C9	.047		UK50-503		MAG5015		
C10	47		DTZ-47	NP047	CN0447		10TCC-Q47
C12	4 N150	742528			*		10TCP-V47
C13	.001			DPMS6D1	EWF1A210	QF1-1	1PB-D10
C14	68 N150 10%	741788			*		10TCP-Q68
C15	.01		DC-103	MGP01	TA110	QC2-141	TG-S10
C16	33	(1)	DTZ-33	NP033	CN0433		10TCC-Q33
C17	47 N150 10%	245245			*		10TCP-Q47
C19	.001			DPMS6D1	EWF1A210	QF1-1	1PB-D10
C20	.001			DPMS6D1	EWF1A210	QF1-1	1PB-D10
C21	.001 100V			CD19FD102J03	SX210		MWC-102
C22	2 5%		DTZ-2R2	NP02P2	CN0522		10TCC-V22
C23	7		DTZ-6R8	NP06P8	CN0568		10TCC-V68
C24	33 N150 10%	741781			*		10TCP-Q33
C25	4 NPO		DTZ-4R7	NP04P7	CN0547		10TCC-V47
C26	330 100V			CD15FD331J03	SX333	QW1-39	MWA-331
C27	390		DD-391	GP390	GP339		10TS-T39
C28	.01		DC-103	MGP01	TA110	QC2-141	TG-S10
C29	68		DD-680	GP68	GP468		10TS-Q68
C30	56		DD-560		GP456		10TS-Q56
C31	.01		DC-103	MGP01	TA110	QC2-141	TG-S10
C32	2 5%		DTZ-2R2	NP02P2	CN0522		10TCC-V22
C33	.01		DC-103	MGP01	TA110	QC2-141	TG-S10
C35	68		DD-680	GP68	GP468		10TS-Q68
C36	.01		DC-103	MGP01	TA110	QC2-141	TG-S10
C37	100 N150 10%	741763			*		10TCP-T10
C38	.01		DC-103	MGP01	TA110	QC2-141	TG-S10
C39	.01			WMF1S1	EWF1A110	QF1-91	1PB-S10
C40	330		DD-331	GP330	GP333		10TS-T33
C41	.01		DC-103	MGP01	TA110	QC2-141	TG-S10
C42	120		DTZ-120		CN0312		10TCC-T12
C43	220		DD-221		GP322		10TS-T22
C44	120		DTZ-120		CN0312		10TCC-T12
C45	.01		DC-103	MGP01	TA110	QC2-141	TG-S10
C46	120		DTZ-120		CN0312		10TCC-T12
C47	270 10% 500V			CD15FD271J03	SX327	QW1-37	MWB-271
C48	2 500V		DTZ-2R2	NP02P2	CN0522		10TCC-V22
C49	.0047		DD-472	GP4700	GP247		5GA-D47
C51	27				CN0427		10TCC-Q27
C52	.01		DC-103	MGP01	TA110	QC2-141	TG-S10
C53	.047		UK50-503		MAG5015		
C54	.047		UK50-503		MAG5015		
C55	.047			DPMS2S47	EWF1A147	QF1-171	1PB-S47
C56	.01		DC-103	MGP01	TA110	QC2-141	TG-S10
C57	10		DTZ-10	NP010	CN0410		10TCC-Q10
C58	.01		DC-103	MGP01	TA110	QC2-141	TG-S10
C59	.01		DC-103	MGP01	TA110	QC2-141	TG-S10
C60	.01		DC-103	MGP01	TA110	QC2-141	TG-S10
C61	.01		DC-103	MGP01	TA110	QC2-141	TG-S10
C62	.01		DC-103	MGP01	TA110	QC2-141	TG-S10
C63	2 5%		DTZ-2R2	NP02P2	CN0522		10TCC-V22
C64	.01		DC-103	MGP01	TA110	QC2-141	TG-S10
C65	18 10% N150	742525			*		10TCP-Q18
C66	2.2 10% 500V		DTZ-2R2	NP02P2	CN0522		10TCC-V22
C67	.047			DPMS2S47	EWF1A147	QF1-171	1PB-S47
C68	.047			DPMS2S47	EWF1A147	QF1-171	1PB-S47
C69	.047			DPMS2S47	EWF1A147	QF1-171	1PB-S47
C70	.047			DPMS2S47	EWF1A147	QF1-171	1PB-S47
C71	.047			DPMS2S47	EWF1A147	QF1-171	1PB-S47
C73	.0068			WMF1D68	EWF1A268	QF1-73	1PB-D68
C75	.0047			WMF1D47	EWF1A247	QF1-57	1PB-D47
C77	100		DD-101	GP100	GP310		10TS-T10
C79	.022			DPMS2S22	EWF1A122	QF1-127	1PB-S22
C80	.0022		DD-222		GP222	QC2-97	5GA-D22
C81	.022			DPMS2S22	EWF1A122	QF1-127	1PB-S22
C82	220		DD-221		GP322		10TS-T22
C83	.01			WMF1S1	EWF1A110	QF1-91	1PB-S10
C84	.0022		DD-222		GP222	QC2-97	5GA-D22
C88	68		DD-680	GP68	GP468		10TS-Q68
C89	68		DD-680	GP68	GP468		10TS-Q68
C90	100		DD-101	GP100	GP310		10TS-T10
C91	.068			WMF1S68	EWF1A168	QF1-195	1PB-S68
C92	100		DD-101	GP100	GP310		10TS-T10
C95	.068			WMF1S68	EWF1A168	QF1-195	1PB-S68
C102	.01		DC-103	MGP01	TA110	QC2-141	TG-S10
C106	.047		UK50-503		MAG5015		
C107	.047		UK50-503		MAG5015		
C110	18				CN0418		10TCC-Q18
C111	82		DD-820		GP482		10TS-Q82
C112	39				CN0439		10TCC-Q39
C113	.01	(2)	DC-103	MGP01	TA110	QC2-141	TG-S10
C114	390 500V		DD-391	GP390	GP339		10TS-T39
C117	.0047		DD-472	GP4700	GP247		5GA-D47
C118	.022		DC-253	MGP025	TA125		TG-S25
C123	.068			WMF1S68	EWF1A168	QF1-195	1PB-S68
C130	.0022		DD-222		GP222	QC2-97	5GA-D22
C131	39 N150	741761			*		10TCP-Q39
C132	15 N150	741810			*		10TCP-Q15
C133	.0022		DD-222		GP222	QC2-97	5GA-D22
C134	3		DTZ-3R3	NP03P3	CN0533		10TCC-V33
C135	220		DD-221		GP322		10TS-T22
C136	.0033			CD19FD332J03	SX233		MWC-332
C137	.01		DC-103	MGP01	TA110	QC2-141	TG-S10

CAPACITORS

ITEM No.	RATIN
C138	.01
C139	220
C141	.01
C201A	150
C201B	7
C202	.01
C203	.01
C204	.01
C205	.047
C206	.01
C207	.01
C208	.0047
C209	.0047
C210	.0047
C211	.0047
C212	.0047
C213	.0047
C501	.01
C502	.01
C541	.0047
C543	.0047
C544	.0047
CT1	20
POWER SUPPLY B	
C3	.022
C4	.01
C5	.047
C6	.022

*Not normally in di
(1) Used in Models wi
(2) Used in Models wi

CONTROLS

ITEM No.	FUN
RV1	Squelch Ran
RV1a	Voltage
RV2	ALC
RV3	S Meter
RV501	SWR
RV502	RF Meter
R541	Mod Meter
VR1	Volume/Power
VR2	Squelch/PA S
VR3	RF Gain
VR4	SWR CAL

(1) Enlarge mountin

RESISTORS (

ITEM No.	RATIN
AREY251	Resistor Ne

(1) Consists of se

COILS (RF-IF

ITEM No.	FUNC
L1	VCO
L2	VCO Mixer (3
L3	RF Choke (68
L4	RF Choke (1u
L5	XMT Osc. (27
L6	RF Choke (2.
L7	XMT Driver (
L8	RF Choke (68
L9	RF Choke (.5
L10	RF Choke (1u
L11	Final (27MH
L12	Pi Filter (2
L13	RF Choke (.4
L14	IF (10.695M
L15	RF Choke (68
L16	RF Choke (.7
L17	RF Choke (.7
L201	RF Choke
T1	Rec Osc (20.
T2	VCO Mixer (3
T3	XMT Mixer (2
T4	XMT Buffer (
T5	Rec Antenna
T6	Rec RF (27MH
T7	IF (10.695MH
T8	IF (455kHz)
T9	IF (455kHz)
T10	IF (455kHz)

A o.	THORDARSON PART No.	WORKMAN PART No.	ZENITH PART No.
	2SC710	WEP710	121-Z9000*
	2SC710	WEP710	121-Z9000*
	2SC829	WEP829	121-Z9000*
	2SC839	WEP736*	121-Z9000*
	2SC710	WEP710	121-Z9000*
	2SC710	WEP710	121-Z9000*
	2SC829	WEP829	121-Z9000*
	2SC839	WEP736*	121-Z9000*
	2SC829	WEP829	121-Z9000*
	2SC839	WEP736*	121-Z9000*
	2SA733	WEP916	121-933
	2SA733	WEP916	121-933
	2SA733	WEP916	121-933
	2SC900	WEP66	121-972
	2SC900	WEP66	121-972
	2SC900	WEP66	121-972
	2SC900	WEP66	ZEN-119
	2SC945	WEP1945	121-Z9000
	2SC945	WEP1945	121-Z9000
	2SC945	WEP1945	121-Z9000
	2SC828	WEP828	ZEN-119
	2SC900	WEP66	ZEN-119
	2SC900	WEP66	ZEN-119
	2SC900	WEP66	ZEN-119
	2SC945	WEP1945	121-Z9000
	2SC945	WEP1945	121-Z9000
	2SC828	WEP828	ZEN-119
	1N4004	WEP156	212-76-02
	1N4004	WEP156	212-76-02
	1N4004	WEP156	212-76-02
	1N4004	WEP156	212-76-02
	1N4004	WEP156	212-76-02
	1N4004	WEP156	212-76-02
	1N4004	WEP156	212-76-02
	1N4004	WEP156	212-76-02
	1N4004	WEP156	212-76-02
	1N4004	WEP156	212-76-02
	1N4004	WEP156	212-76-02
	2SC900	WEP66	ZEN-119
	2SC900	WEP66	ZEN-119
	2SC900	WEP66	ZEN-119
	2SC900	WEP66	ZEN-119
	2SC1061	WEP756	
	2SC1061	WEP756	
	1N4745A	WEP1160	
		WEP1153	

RAGUE	PART No.
IE	GENERAL LINE
	SD50-R109
	EV-1222
	SD50-R229
	EV-1226
	EV-1615
	EV-1615
	EV-1222
	EV-1318
	EV-1615
	EV-1226
	SD10-4R79
	SD50-R479
	EV-1125
	EV-1226
	EV-1240
	EV-1318
	EV-1226
	EV-1326
	EV-1260
	EV-1125
	EV-1615
	EV-1325
	EV-1319
	EV-1610
	TVA-1213.5
	EV-1330

PARTS LIST AND DESCRIPTION (CONTINUED)

(When ordering parts, state Model, Part Number, and Description.)

CAPACITORS

ITEM No.	RATING	MFGR. PART No.	REPLACEMENT DATA: CENTRALAB PART No.	CORNELL-DUBILIER PART No.	MALLORY PART No.	SPRAGUE PART No.: Q-LINE	SPRAGUE PART No.: GENERAL LINE
MAIN BOARD							
C4	68 N150 10%	741788			*		10TCP-Q68
C5	.01		DC-103	MGP01	TA110	QC2-141	TG-S10
C6	22 N150 10%	741807			*		10TCP-Q22
C7	220	(1)	DD-221		GP322		10TS-T22
	330	(2)	DD-331	GP330	GP333		10TS-T33
C8	120	(1)	DTZ-120		CN0312		10TCC-T12
	150	(2)	DD-151		GP315		10TS-T15
C9	.047		UK50-503		MAG5015		
C10	47		DTZ-47	NP047	CN0447		10TCC-Q47
C12	4 N150	742528			*		10TCP-V47
C13	.001			DPMS6D1	EWF1A210	QF1-1	1PB-D10
C14	68 N150 10%	741788			*		10TCP-Q68
C15	.01		DC-103	MGP01	TA110	QC2-141	TG-S10
C16	33	(1)	DTZ-33	NP033	CN0433		10TCC-Q33
C17	47 N150 10%	245245			*		10TCP-Q47
C19	.001			DPMS6D1	EWF1A210	QF1-1	1PB-D10
C20	.001			DPMS6D1	EWF1A210	QF1-1	1PB-D10
C21	.001 100V			CD19FD102J03	SX210		MWC-102
C22	2 5%		DTZ-2R2	NP02P2	CN0522		10TCC-V22
C23	7		DTZ-6R8	NP06P8	CN0568		10TCC-V68
C24	33 N150 10%	741781			*		10TCP-Q33
C25	4 NPO		DTZ-4R7	NP04P7	CN0547		10TCC-V47
C26	330 100V			CD15FD331J03	SX333	QW1-39	MWA-331
C27	390		DD-391	GP390	GP339		10TS-T39
C28	.01		DC-103	MGP01	TA110	QC2-141	TG-S10
C29	68		DD-680	GP68	GP468		10TS-Q68
C30	56		DD-560		GP456		10TS-Q56
C31	.01		DC-103	MGP01	TA110	QC2-141	TG-S10
C32	2 5%		DTZ-2R2	NP02P2	CN0522		10TCC-V22
C33	.01		DC-103	MGP01	TA110	QC2-141	TG-S10
C35	68		DD-680	GP68	GP468		10TS-Q68
C36	.01		DC-103	MGP01	TA110	QC2-141	TG-S10
C37	100 N150 10%	741763			*		10TCP-T10
C38	.01		DC-103	MGP01	TA110	QC2-141	TG-S10
C39	.01			WMF1S1	EWF1A110	QF1-91	1PB-S10
C40	330		DD-331	GP330	GP333		10TS-T33
C41	.01		DC-103	MGP01	TA110	QC2-141	TG-S10
C42	120		DTZ-120		CN0312		10TCC-T12
C43	220		DD-221		GP322		10TS-T22
C44	120		DTZ-120		CN0312		10TCC-T12
C45	.01		DC-103	MGP01	TA110	QC2-141	TG-S10
C46	120		DTZ-120		CN0312		10TCC-T12
C47	270 10% 500V			CD15FD271J03	SX327	QW1-37	MWB-271
C48	2 500V		DTZ-2R2	NP02P2	CN0522		10TCC-V22
C49	.0047		DD-472	GP4700	GP247		5GA-D47
C51	27				CN0427		10TCC-Q27
C52	.01		DC-103	MGP01	TA110	QC2-141	TG-S10
C53	.047		UK50-503		MAG5015		
C54	.047		UK50-503		MAG5015		
C55	.047			DPMS2S47	EWF1A147	QF1-171	1PB-S47
C56	.01		DC-103	MGP01	TA110	QC2-141	TG-S10
C57	10		DTZ-10	NP010	CN0410		10TCC-Q10
C58	.01		DC-103	MGP01	TA110	QC2-141	TG-S10
C59	.01		DC-103	MGP01	TA110	QC2-141	TG-S10
C60	.01		DC-103	MGP01	TA110	QC2-141	TG-S10
C61	.01		DC-103	MGP01	TA110	QC2-141	TG-S10
C62	.01		DC-103	MGP01	TA110	QC2-141	TG-S10
C63	2 5%		DTZ-2R2	NP02P2	CN0522		10TCC-V22
C64	.01		DC-103	MGP01	TA110	QC2-141	TG-S10
C65	18 10% N150	742525			*		10TCP-Q18
C66	2.2 10% 500V		DTZ-2R2	NP02P2	CN0522		10TCC-V22
C67	.047			DPMS2S47	EWF1A147	QF1-171	1PB-S47
C68	.047			DPMS2S47	EWF1A147	QF1-171	1PB-S47
C69	.047			DPMS2S47	EWF1A147	QF1-171	1PB-S47
C70	.047			DPMS2S47	EWF1A147	QF1-171	1PB-S47
C71	.047			DPMS2S47	EWF1A147	QF1-171	1PB-S47
C73	.0068			WMF1D68	EWF1A268	QF1-73	1PB-D68
C75	.0047			WMF1D47	EWF1A247	QF1-57	1PB-D47
C77	100		DD-101	GP100	GP310		10TS-T10
C79	.022			DPMS2S22	EWF1A122	QF1-127	1PB-S22
C80	.0022		DD-222		GP222	QC2-97	5GA-D22
C81	.022			DPMS2S22	EWF1A122	QF1-127	1PB-S22
C82	220		DD-221		GP322		10TS-T22
C83	.01			WMF1S1	EWF1A110	QF1-91	1PB-S10
C84	.0022		DD-222		GP222	QC2-97	5GA-D22
C88	68		DD-680	GP68	GP468		10TS-Q68
C89	68		DD-680	GP68	GP468		10TS-Q68
C90	100		DD-101	GP100	GP310		10TS-T10
C91	.068			WMF1S68	EWF1A168	QF1-195	1PB-S68
C92	100		DD-101	GP100	GP310		10TS-T10
C95	.068			WMF1S68	EWF1A168	QF1-195	1PB-S68
C102	.01		DC-103	MGP01	TA110	QC2-141	TG-S10
C106	.047		UK50-503		MAG5015		
C107	.047		UK50-503		MAG5015		
C110	18				CN0418		10TCC-Q18
C111	82		DD-820		GP482		10TS-Q82
C112	39				CN0439		10TCC-Q39
C113	.01	(2)	DC-103	MGP01	TA110	QC2-141	TG-S10
C114	390 500V		DD-391	GP390	GP339		10TS-T39
C117	.0047		DD-472	GP4700	GP247		5GA-D47
C118	.022		DC-253	MGP025	TA125		TG-S25
C123	.068			WMF1S68	EWF1A168	QF1-195	1PB-S68
C130	.0022		DD-222		GP222	QC2-97	5GA-D22
C131	39 N150	741761			*		10TCP-Q39
C132	15 N150	741810			*		10TCP-Q15
C133	.0022		DD-222		GP222	QC2-97	5GA-D22
C134	3		DTZ-3R3	NP03P3	CN0533		10TCC-V33
C135	220		DD-221		GP322		10TS-T22
C136	.0033			CD19FD332J03	SX233		MWC-332
C137	.01		DC-103	MGP01	TA110	QC2-141	TG-S10

PARTS LIST AND DESCRIPTION (CONTINUED)

(When ordering parts, state Model, Part Number, and Description.)

CAPACITORS (cont)

ITEM No.	RATING	MFGR. PART No.	REPLACEMENT DATA: CENTRALAB PART No.	CORNELL-DUBILIER PART No.	MALLORY PART No.	SPRAGUE PART No.: Q-LINE	SPRAGUE PART No.: GENERAL LINE
C138	.01		DC-103	MGP01	TA110	QC2-141	TG-S10
C139	220		DD-221		GP322		10TS-T22
C141	.01		DC-103	MGP01	TA110	QC2-141	TG-S10
C201A	150			CD15FD151J03	SX315	QW1-31	MWA-151
C201B	7		DTZ-6R8	NP06P8	CN0568		10TCC-V68
C202	.01		DC-103	MGP01	TA110	QC2-141	TG-S10
C203	.01		DC-103	MGP01	TA110	QC2-141	TG-S10
C204	.01		DC-103	MGP01	TA110	QC2-141	TG-S10
C205	.047		UK50-503		MAG5015		
C206	.01		DC-103	MGP01	TA110	QC2-141	TG-S10
C207	.01		DC-103	MGP01	TA110	QC2-141	TG-S10
C208	.0047		DD-472	GP4700	GP247		5GA-D47
C209	.0047		DD-472	GP4700	GP247		5GA-D47
C210	.0047		DD-472	GP4700	GP247		5GA-D47
C211	.0047		DD-472	GP4700	GP247		5GA-D47
C212	.0047		DD-472	GP4700	GP247		5GA-D47
C213	.0047		DD-472	GP4700	GP247		5GA-D47
C501	.01		DC-103	MGP01	TA110	QC2-141	TG-S10
C502	.01		DC-103	MGP01	TA110	QC2-141	TG-S10
C541	.0047		DD-472	GP4700	GP247		5GA-D47
C543	.0047		DD-472	GP4700	GP247		5GA-D47
C544	.0047		DD-472	GP4700	GP247		5GA-D47
CT1	20	741421					
POWER SUPPLY BOARD							
C3	.022		DC-253	MGP025	TA125		
C4	.01		DC-103	MGP01	TA110	QC2-141	TG-S10
C5	.047		UK50-503		MAG5015		
C6	.022		DC-253	MGP025	TA125		TG-S25

*Not normally in distributor's stock. Available thru distributor on order to manufacturer.
(1) Used in Models with serial numbers 16000001 thru 16008000.
(2) Used in Models with serial numbers 16008001 and above.

CONTROLS (All wattages 1/2 watt, or less, unless listed)

ITEM No.	FUNCTION	RESIST-ANCE	REPLACEMENT DATA: MFGR. PART No.	CENTRALAB PART No.	MALLORY PART No.	TRW PART No.
RV1	Squelch Range	10K	741707			U260R103B
RV1a	Voltage	500	742694	T-500	MTC52L1	X201R501B
RV2	ALC	5000	742508			U260R502B
RV3	S Meter	20K	741709			U260R253B
RV501	SWR	5000	742631			X260R502B
RV502	RF Meter	20K	742628			X260R253B
RS41	Mod Meter	20K	742635			X260R253B
VR1	Volume/Power Switch	50K	742636	F2-50K(1), SSK014,KR3	RU54A,SL36 SL1500,US42	BU1(1),CF63, SS1, WF
VR2	Squelch/PA Switch	10K	742639			
VR3	RF Gain	100K	741844			
VR4	SWR CAL	10K	741843			

(1) Enlarge mounting hole.

RESISTORS (Power and Special)

ITEM No.	RATING	REPLACEMENT DATA: WORKMAN PART No.	MFGR. PART No.
AREY251	Resistor Network		742566(1)

ITEM No.	RATING	REPLACEMENT DATA: WORKMAN PART No.	MFGR. PART No.
AREY252	Resistor Network		742566(1)

(1) Consists of seven 1800 ohm resistors.

COILS (RF-IF)

ITEM No.	FUNCTION	REPLACEMENT DATA: PART No.	OTHER IDENTIFICATION	MILLER PART No.	REMARKS
L1	VCO	742514			
L2	VCO Mixer (38MHz)	741720			
L3	RF Choke (68uH)	741697			
L4	RF Choke (1uH)	742515			
L5	XMT Osc. (27MHz)	742516			
L6	RF Choke (2.2uH)	741695			
L7	XMT Driver (27MHz)	741696			
L8	RF Choke (68uH)	741697			
L9	RF Choke (.55uH)	741703			
L10	RF Choke (1uH)	741698			
L11	Final (27MHz)	741699			
L12	Pi Filter (27MHz)	741700			
L13	RF Choke (.4uH)	742517			
L14	IF (10.695MHz)	742521			
L15	RF Choke (68uH)	741697			
L16	RF Choke (.75uH)	741702			
L17	RF Choke (.75uH)	741702			
L201	RF Choke	742605			
T1	Rec Osc (20.480MHz)	742518			
T2	VCO Mixer (38MHz)	742519			
T3	XMT Mixer (27MHz)	741712			
T4	XMT Buffer (27MHz)	741713			
T5	Rec Antenna (27MHz)	741714			
T6	Rec RF (27MHz)	742520			
T7	IF (10.695MHz)	742521			
T8	IF (455kHz)	741717			
T9	IF (455kHz)	741718			
T10	IF (455kHz)	741719			

PARTS LIST AND DESCRIPTION (CONTINUED)

(When ordering parts, state Model, Part Number, and Description.)

FILTER CHOKE

ITEM No.	RATINGS			REPLACEMENT DATA			NOTES
	CURRENT (Measured)	DC RES.	INDUCTANCE (0 CURRENT 1000~)	MFGR. PART No.	THORDARSON PART No.	TRIAD PART No.	
CH1	1.3A	.116	48mH	741691 ELA-16(1)	TR-523		(1) Number on unit.

TRANSFORMER (Audio Output)

ITEM No.	IMPEDANCE			REPLACEMENT DATA			NOTES
	PRI.	SEC.		MFGR. PART No.	THORDARSON PART No.	TRIAD PART No.	
T11	32	1 8	2 128	741690 ETA-66(1)	TR723	MCB-16	(1) Number on unit

TRANSFORMER (Power)

ITEM No.	RATING		REPLACEMENT DATA			NOTES
	PRI.	SEC. 1	MFGR. PART No.	THORDARSON PART No.	TRIAD PART No.	
PT	120V AC @ 420mA	17.40V AC @ 2.79A	742648 TP-DP68V002Y(1)			(1) Number on unit.

SPEAKER

ITEM No.	TYPE	REPLACEMENT DATA		NOTES
		MFGR. PART No.	QUAM PART No.	
SP	3" PM 8 ohms	741845 0770802(1)	30A05Z8R	(1) Number on unit.

FUSE DEVICES

ITEM No.	DESCRIPTION	REPLACEMENT DATA						
		PART No.		BUSS PART No.		LITTELFUSE PART No.		WORKMAN PART No.
		DEVICE	HOLDER	DEVICE	HOLDER	DEVICE	HOLDER	DEVICE
F1a	.75A	742670	742662	AGC 3/4	HKP	312.750	342001A	
F1b	2.5A Pigtail	742695		GJV 2 1/2		31802.5		
F2	2A	742673	742574	AGC2	NDJ	312002	150145	FG2-2

MICROPHONE

ITEM No.	REPLACEMENT DATA				CONNECTION DATA						
	MFGR. PART No.	GC PART No.	GC NOISE CANCEL	GC POWER	GC CONNECTOR	GC Red	GC Shield	GC Yellow	GC Blue	GC White	GC Black
MIC	741826	18-032	18-034	18-010	18-092	1	2	4	3	NC	2

MISCELLANEOUS

ITEM No.	PART NAME	PART No.	NOTES
CF1	Ceramic Filter	741812	455kHz
CR1	Componet Combo	742591	AC Isolation
J1	Jack	742665	Antenna
J2	Jack	741815	Microphone
J3	Jack	742498	PA
J4	Jack	742498	Ext Sp
J5	Jack	742664	DC Power
J6	Jack	742663	AC Power
J7	Jack	742666	Headphone
LED301	LED	742568	Channel Display
M1	Meter	742675	S/MOD
M2	Meter	742677	RF/CAL/SWR
PL1	Lamp	742679	Meter (5.46V @ 50mA)
PL2	Lamp	742679	Meter (5.46V @ 50mA)
PL3	Lamp	742678	TX (4.73V @ 32mA)
PL4	Lamp	742678	RX (4.75V @ 32mA)
S1	Switch		Power (Part of Volume Control)
S2	Switch	742645	Delta Tune
S3	Switch	741817	ANL
S4	Switch	741817	NB
S5	Switch	741817	Tone
S6	Switch		CB/PA (Part of Squelch Control)
S7	Switch	741645	S-RF/CAL/SWR
SW1	Switch	742571	Channel Selector
X1	Crystal	742506	10.240MHz
X2	Crystal	742507	10.695MHz

CABINETS & CABINET PARTS (When ordering specify model, chassis & color)

ITEM	PART No.
Escutcheon Knob, Control	742575 741823

ITEM	PART No.
Knob, Channel	742542