NOTE

Repair or adjustment of transmitter circuits must be under supervision of a person with first-or second-class radiotelephone license.
(Refer to FCC Rules and Regulations Part 95, Subpart C & D.)

The frequency of the transmitter should be checked periodically with a secondary frequency standard to insure proper and legal operation.

Best results will be obtained when adjusting the final RF output circuit if the antenna normally used is connected and the chassis is as nearly in the cabinet as possible.

Connect either 50-ohm dummy load or the normally used antenna system.

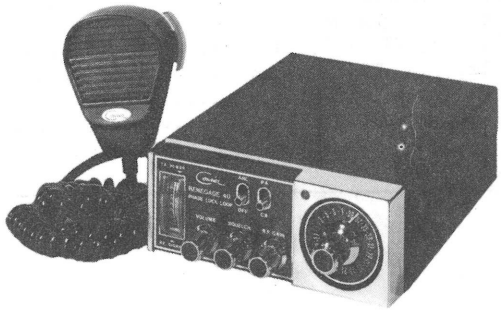

MODEL RENEGADE 40

MANUFACTURER'S SPECIFICATIONS

RECEIVER SECTION

* Frequency Range	26.965 to 27.405 MHz
* Sensitivity	0.25uV for 10 db S/N at 1 kHz at 30% Modulation
* Selectivity	BW 2.5 kHz min. at 6 db down
* Adj. Channel Rejection	Better than 60 db
* Audio Distortion at 1 kHz	Less than 10% at 3W
* Squelch Sensitivity	0.2uV
* Squelch Stop Sensitivity	45 to 30,000uV (adjustable)
* Noise Limiter	Series gate

TRANSMITTER SECTION

* Frequency Range	26.965 to 27.405 MHz
* Power Output at 13.8 VDC	3.5 to 4 watts
* Modulation (4mV at microphone)	100%
* Emission (Class D operation)	6A3
* Hum and Noise	Better than 40 db down
* Frequency and Tolerance	Better than ± .005%
* Antenna Impedance	50 ohms
* Switching	Electronic
* Modulation Distortion	Less than 10% at 95% modulation at 1 kHz

Courtesy of the Manufacturer

HOWARD W. SAMS & CO., INC. Indianapolis, Indiana 46206

 Printed in U. S. of America 8CE714

ALIGNMENT INSTRUCTIONS

CAUTION: Use isolation transformer or observe polarity when connecting test equipment.
Maintain line voltage at 120V AC. Allow a 15-minute warm-up period.
Adjustments made with 13.8-volt DC input.
Connect low sides of test equipment to ground unless specified otherwise.
Connect 50-ohm dummy load or antenna before keying transmitter.
Connect microphone.

Suggested Alignment Tools:	GC ELECTRONICS:
L2, T1, T2, T3, T10, T11, T15, T16, T17.....	9440
L9, T12, T13, T14.....	9304
T4 thru T7.....	5009
C51, C125.....	8276

SYNTHESIZER ALIGNMENT

TEST EQUIPMENT	TRANSCEIVER	ADJUST	REMARKS
Input of frequency counter TP10. (Q3, Base).	Ch. 19	CS1	Adjust for 10.240MHz.
Inputs of oscilloscope and frequency counter to TP11. (Junction of C62, C63, andC64).	Ch. 19	T10	Adjust for maximum RF at 36.380MHz.
Input of DC meter to TP12. (V1 pin 7).	Ch. 19	T11	Adjust for 3.20 volts.
Input of frequency counter to TP13. (Q15, Emitter).	Ch. 19		Check for 37.660MHz. Check all channels. (Channel frequency ±10.695MHz) = frequency on counter.
Input of frequency counter to TP14. (Q19, Emitter).	Ch. 19 Xmt	C125	Adjust for 10.695MHz.
Input of frequency counter to antenna jack.	Ch. 19 Xmt	C125	Check for 27.185MHz. If necessary readjust C125 for 27.185MHz.

RECEIVER ALIGNMENT

Connect an AC VTVM or AF wattmeter across speaker voice coil.
Adjust volume control to obtain a suitable indication.
Set generator output low enough to prevent AGC limiting.

TEST EQUIPMENT	TRANSCEIVER	ADJUST	REMARKS
Output of signal generator thru .01uF to TP10 (Q3, Base). 455kHz,1000Hz @ 30% modulation.	Ch. 19 Squelch MINIMUM RF Gain Maximum ANL Off	T7,T6 T5,T4	Adjust for maximum output.
Output of signal generator thru .01uF to antenna jack. 27.185MHz,1000Hz @ 30% modulation.	Ch. 19 Squelch MINIMUM RF Gain Maximum ANL Off	T3,L2 T2,T1	Adjust for maximum output. If necessary readjust T4, T5, T6 and T7.

RECEIVER ADJUSTMENTS

Connect an AC VTVM or AF wattmeter across speaker voice coil.
Adjust volume control to obtain a suitable indication.

TEST EQUIPMENT	TRANSCEIVER	ADJUST	REMARKS
Output of signal generator thru .01uF to antenna jack. 27.185MHz,1000Hz @ 30% modulation. Output 50,000uV.	Ch. 19 Squelch MINIMUM RF Gain Maximum ANL Off	VR1	AGC Adjust volume control to obtain 0db. Decrease generator to 50uV. Adjust VR1 so that audio signal does not drop more than 10db.
Output of signal generator thru .01uF to antenna jack. 27.185MHz,1000Hz @ 30% modulation. Output 1500uV.	Ch. 19 RF Gain Maximum ANL Off	VR3	SQUELCH RANGE Set Squelch Control VR2 fully clockwise. Adjust VR3 so that squelch just breaks.
Output of signal generator thru .01uF to antenna jack. 27.185MHz,1000Hz @ 30% modulation. Output 100uV.	Ch. 19 RF Gain Maximum ANL Off	VR7	RX SIGNAL METER Adjust VR7 for 9 on RX Signal Scale of meter.

TRANSMITTER ALIGNMENT

Connect an RF wattmeter and 50-ohm, 25-watt dummy load to antenna connector.
NOTE: Be sure to check transmit frequency and power on all active channels after alignment of transmitter.
See page 4 for channel frequencies.

TEST EQUIPMENT	TRANSCEIVER	ADJUST	REMARKS
	Ch. 19	VR5,T17,T16 T15,T14, T13,L9	Adjust for maximum.
	Ch. 19	T13	Adjust for 4 watts maximum.
Tunable field strength meter set at 54MHz.	Ch. 19	T12	Adjust for MINIMUM signal.

TRANSMITTER ADJUSTMENTS

Connect an RF wattmeter and 50-ohm, 25-watt dummy load to antenna connector.
NOTE: Be sure to check transmit frequency and power on all active channels after adjustment of transmitter.
See page 4 for channel frequencies.

TEST EQUIPMENT	TRANSCEIVER	ADJUST	REMARKS
Modulation meter to antenna jack. Inject a 1000Hz, 10mV signal at TP2.	Ch. 19	VR9	AMC Adjust VR9 for 100% modulation maximum.
Connect an RF wattmeter and 50-ohm, 25-watt dummy load to antenna connector.	Ch. 19	VR6	TX POWER METER Adjust VR6 to a point just below the red on the TX Power Scale of meter.

TRUTH CHART

1 = 4.69 Volts 0 = 0 Volts

CHANNEL	U1 PROGRAM DIVIDER 10kHz, Pin 18 of U1 — PINS 11	12	13	14	15	16		REC & XMT VCO OUTPUT IN MHZ AT TP13 (Q15, EMITTER)
1	0	0	0	0	0	0		37.660
2	0	0	0	0	0	1		37.670
3	0	0	0	0	1	0		37.680
4	0	0	0	1	0	0		37.700
5	0	0	0	1	0	1		37.710
6	0	0	0	1	1	0		37.720
7	0	0	0	1	1	1		37.730
8	0	0	1	0	0	1		37.750
9	0	0	1	0	1	0		37.760
10	0	0	1	0	1	1		37.770
11	0	0	1	1	0	0		37.780
12	0	0	1	1	1	0		37.800
13	0	0	1	1	1	1		37.810
14	0	1	0	0	0	0		37.820
15	0	1	0	0	0	1		37.830
16	0	1	0	0	1	1		37.850
17	0	1	0	1	0	0		37.860
18	0	1	0	1	0	1		37.870
19	0	1	0	1	1	0		37.880
20	0	1	1	0	0	0		37.900

1 = 4.69 Volts 0 = 0 Volts

CHANNEL	U1 PROGRAM DIVIDER 10kHz, Pin 18 of U1 — PINS 11	12	13	14	15	16		REC & XMT VCO OUTPUT IN MHZ AT TP13 (Q15, EMITTER)
21	0	1	1	0	0	1		37.910
22	0	1	1	0	1	0		37.920
23	0	1	1	1	0	1		37.950
24	0	1	1	0	1	1		37.930
25	0	1	1	1	0	0		37.940
26	0	1	1	1	1	0		37.960
27	0	1	1	1	1	1		37.970
28	1	0	0	0	0	0		37.980
29	1	0	0	0	0	1		37.990
30	1	0	0	0	1	0		38.000
31	1	0	0	0	1	1		38.010
32	1	0	0	1	0	0		38.020
33	1	0	0	1	0	1		38.030
34	1	0	0	1	1	0		38.040
35	1	0	0	1	1	1		38.050
36	1	0	1	0	0	0		38.060
37	1	0	1	0	0	1		38.070
38	1	0	1	0	1	0		38.080
39	1	0	1	0	1	1		38.090
40	1	0	1	1	0	0		38.100

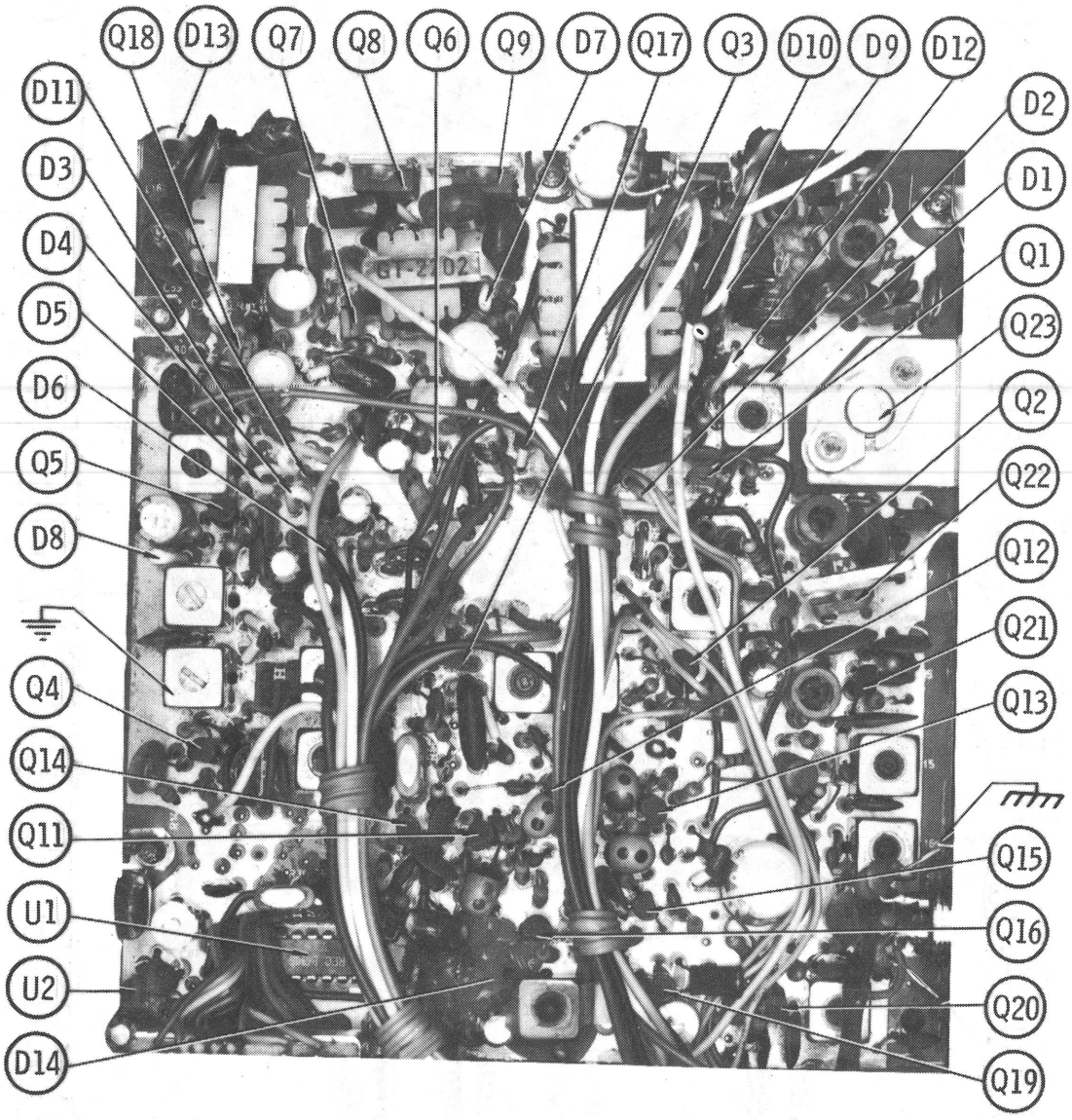
Q18
D13
Q7
Q8
Q6
Q9
D7
Q17
Q3
D10
D9
D12
D11
D3
D4
D5
D6
Q5
D8
Q4
Q14
Q11
U1
U2
D14
D2
D1
Q1
Q23
Q2
Q22
Q12
Q21
Q13
Q15
Q16
Q20
Q19

MAIN BOARD

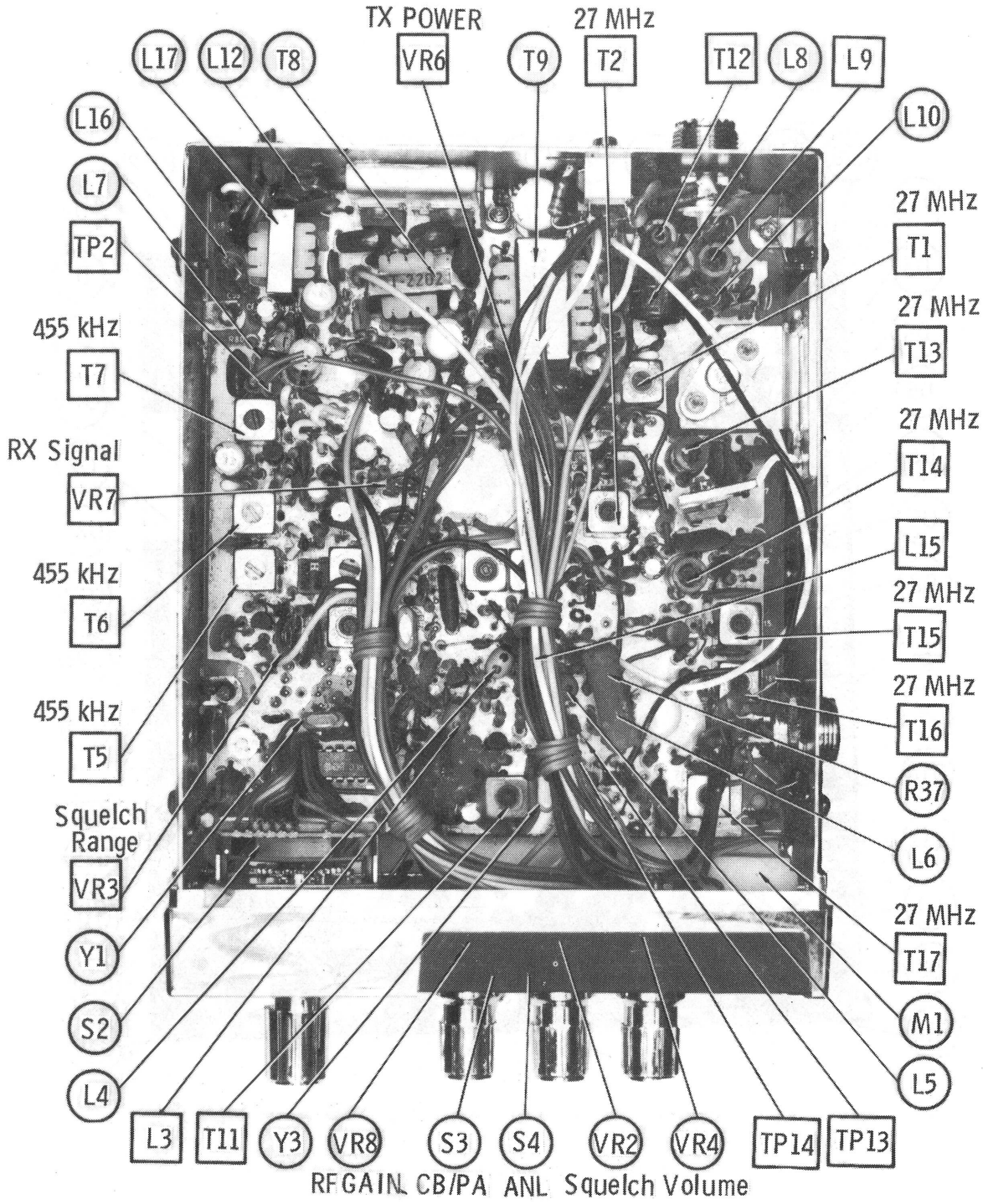

CHASSIS BOTTOM

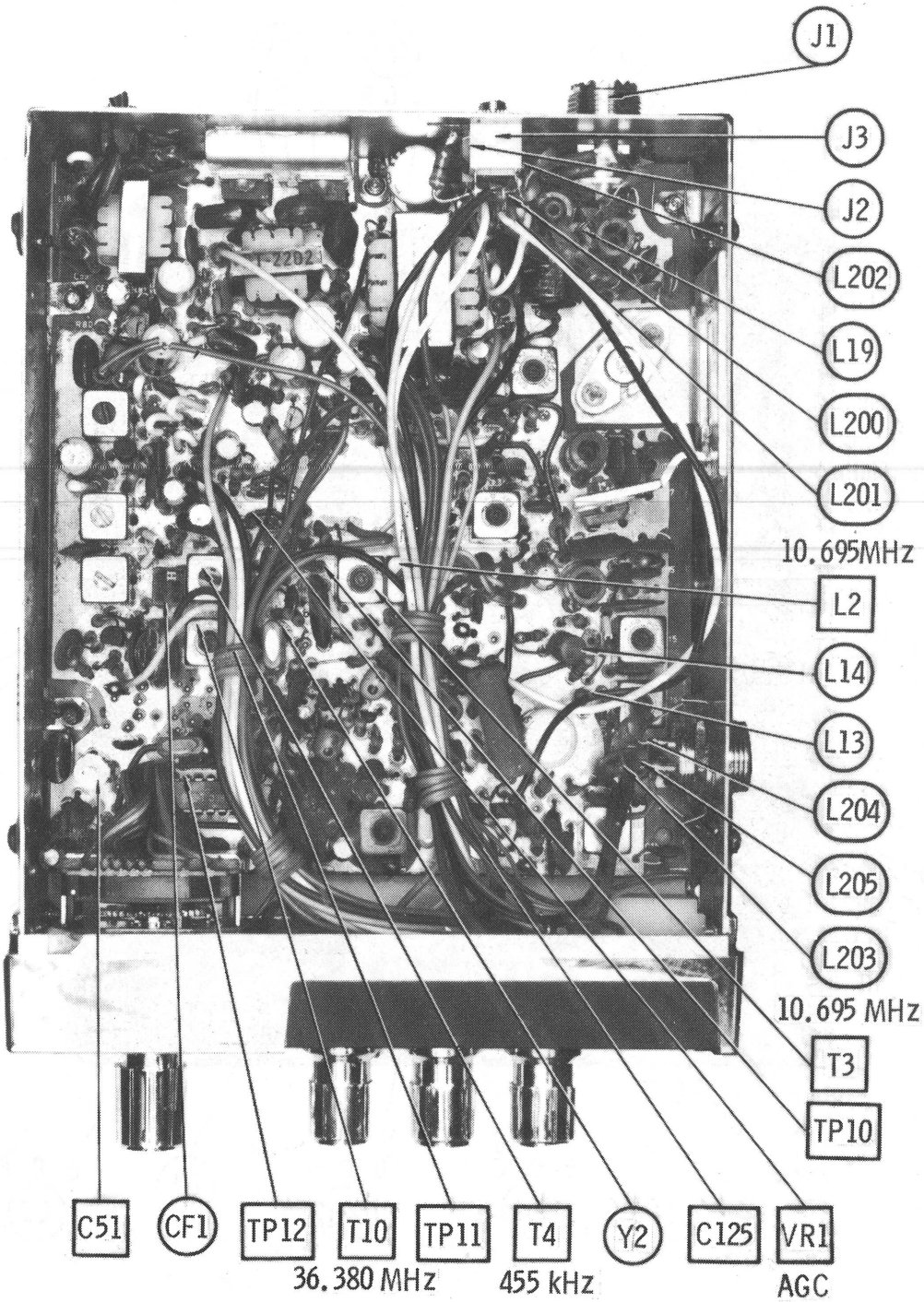

CHASSIS BOTTOM

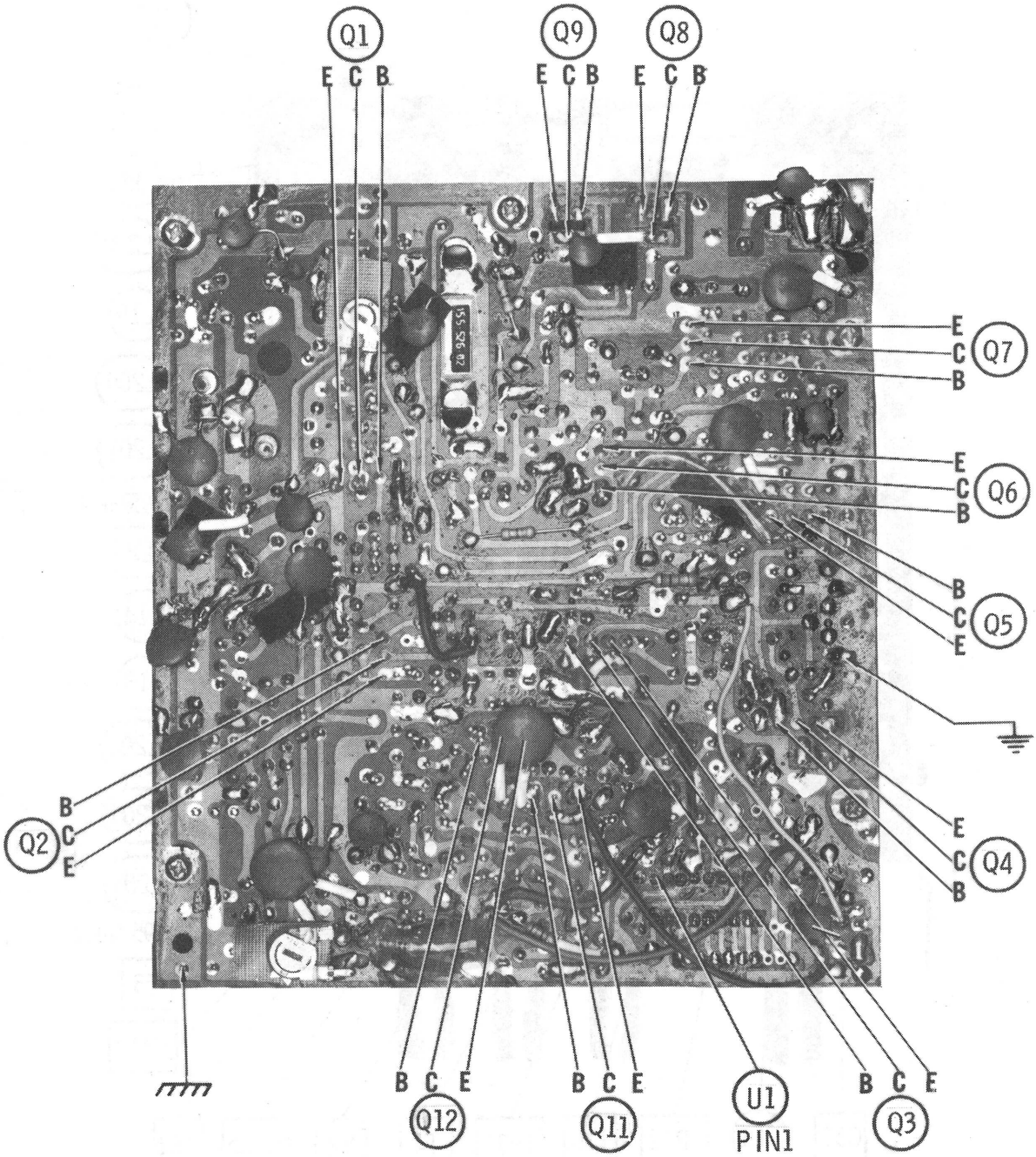
Q1
E C B
Q9
E C B
Q8
E C B
E
C
B
Q7
E
C
B
Q6
B
C
E
Q5
B
C
E
Q2
E
C
B
Q4
B C E
Q12
B C E
Q11
U1
PIN1
B C E
Q3

MAIN BOARD

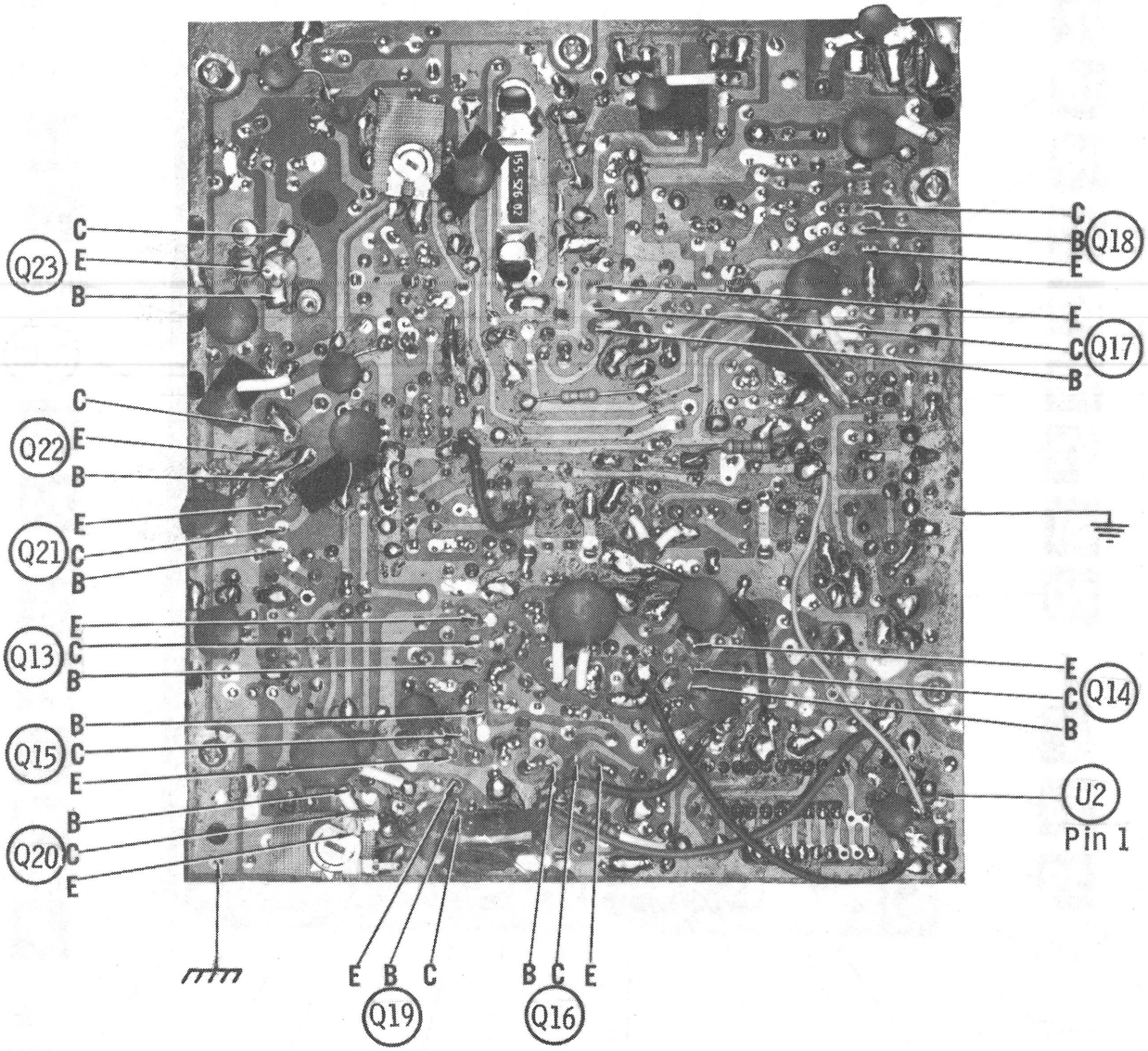
Q23
C
E
B
Q22
C
E
B
Q21
E
C
B
Q13
E
C
B
Q15
B
C
E
Q20
B
C
E
E B C
Q19
B C E
Q16
Q18
C
B
E
Q17
E
C
B
Q14
E
C
B
U2
Pin 1

MAIN BOARD

A Howard W. Sams CIRCUITRACE® Photo

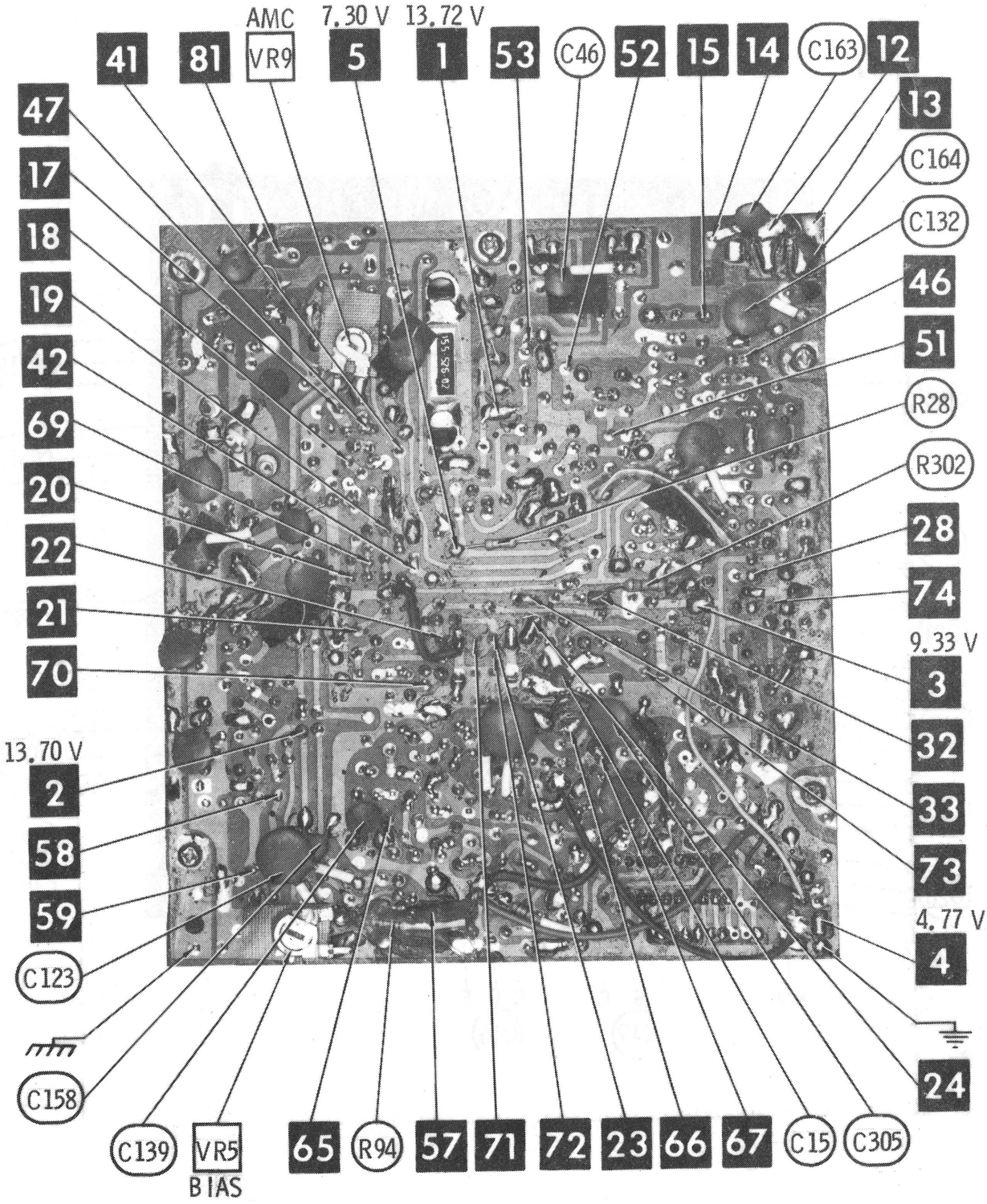

MAIN BOARD

A Howard W. Sams CIRCUITRACE® Photo

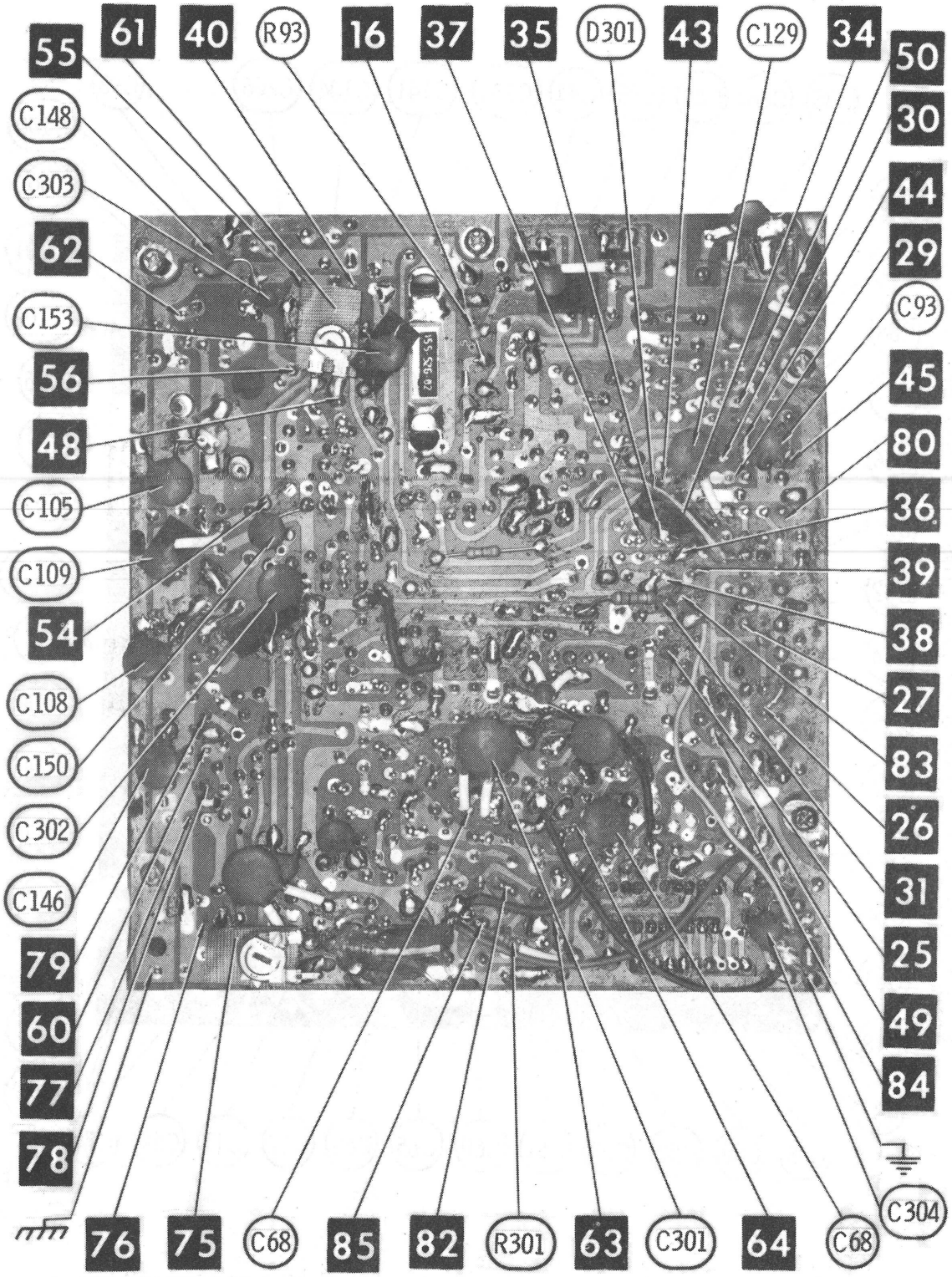

MAIN BOARD

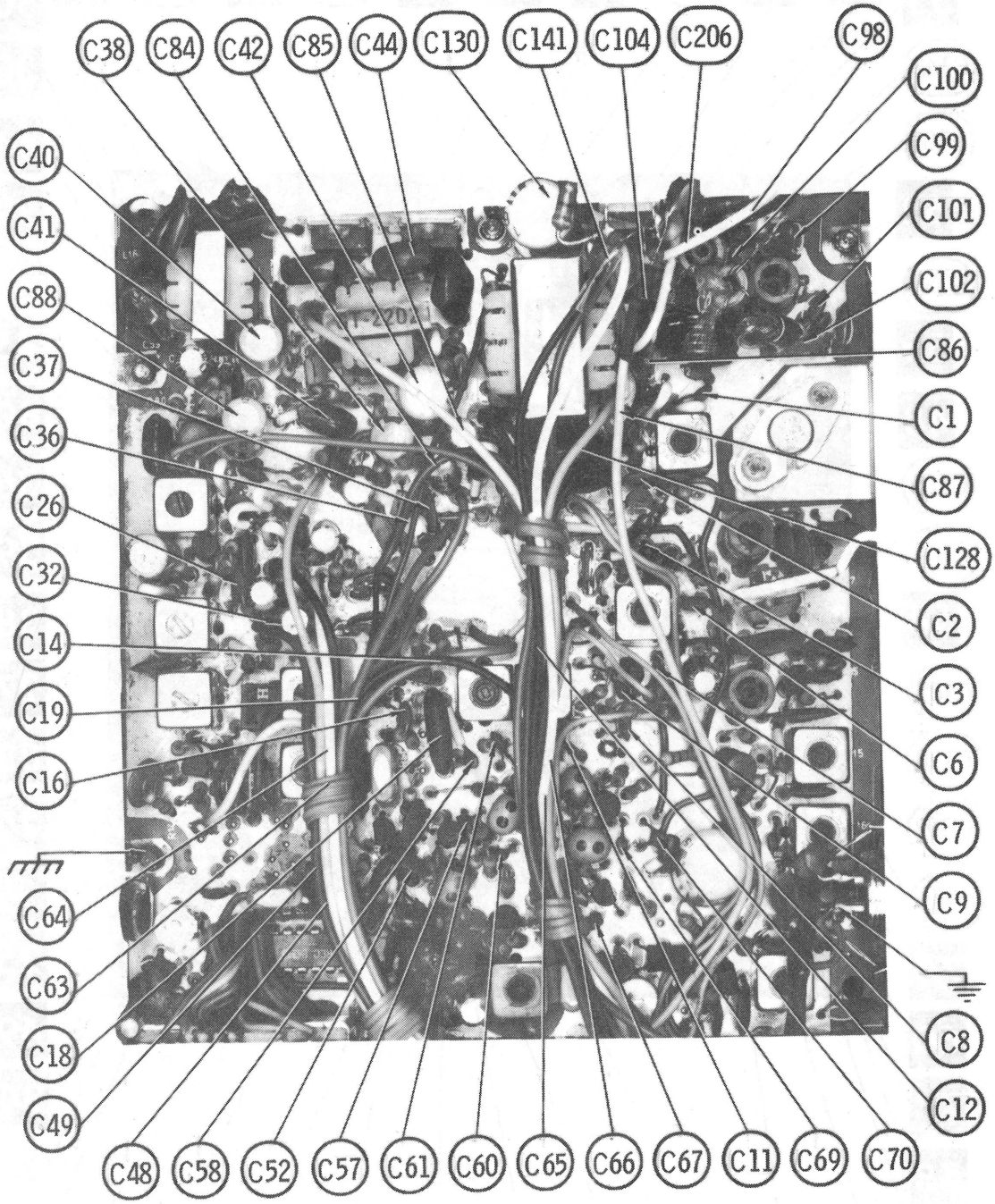
C38
C84
C42
C85
C44
C130
C141
C104
C206
C98
C100
C99
C101
C102
C86
C1
C87
C128
C2
C3
C6
C7
C9
C8
C12
C70
C69
C11
C67
C66
C65
C60
C61
C57
C52
C58
C48
C49
C18
C63
C64
C16
C19
C14
C32
C26
C36
C37
C88
C41
C40

MAIN BOARD

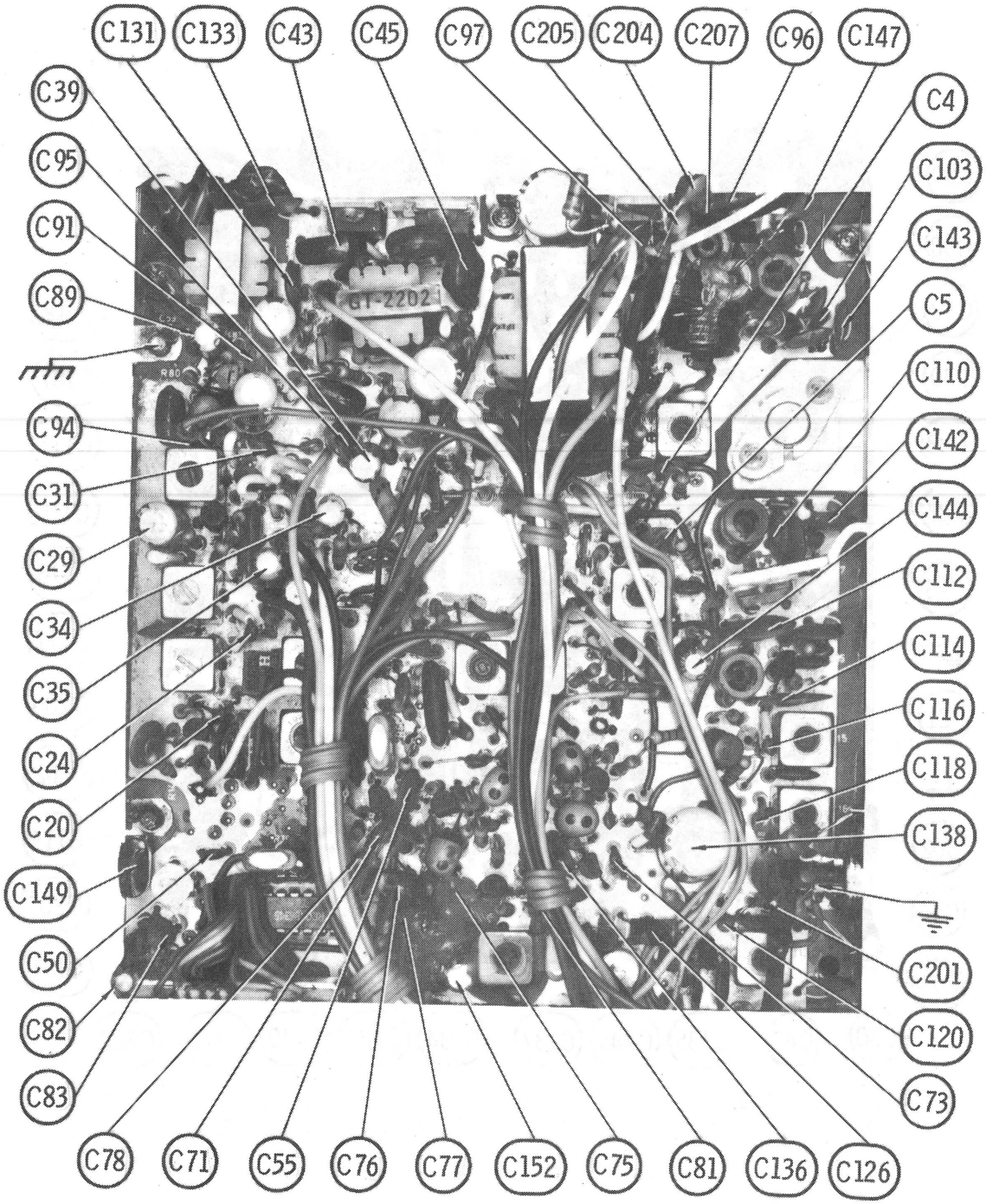
C131
C133
C43
C45
C97
C205
C204
C207
C96
C147
C39
C95
C91
C89
C94
C31
C29
C34
C35
C24
C20
C149
C50
C82
C83
C78
C71
C55
C76
C77
C152
C75
C81
C136
C126
C4
C103
C143
C5
C110
C142
C144
C112
C114
C116
C118
C138
C201
C120
C73

MAIN BOARD

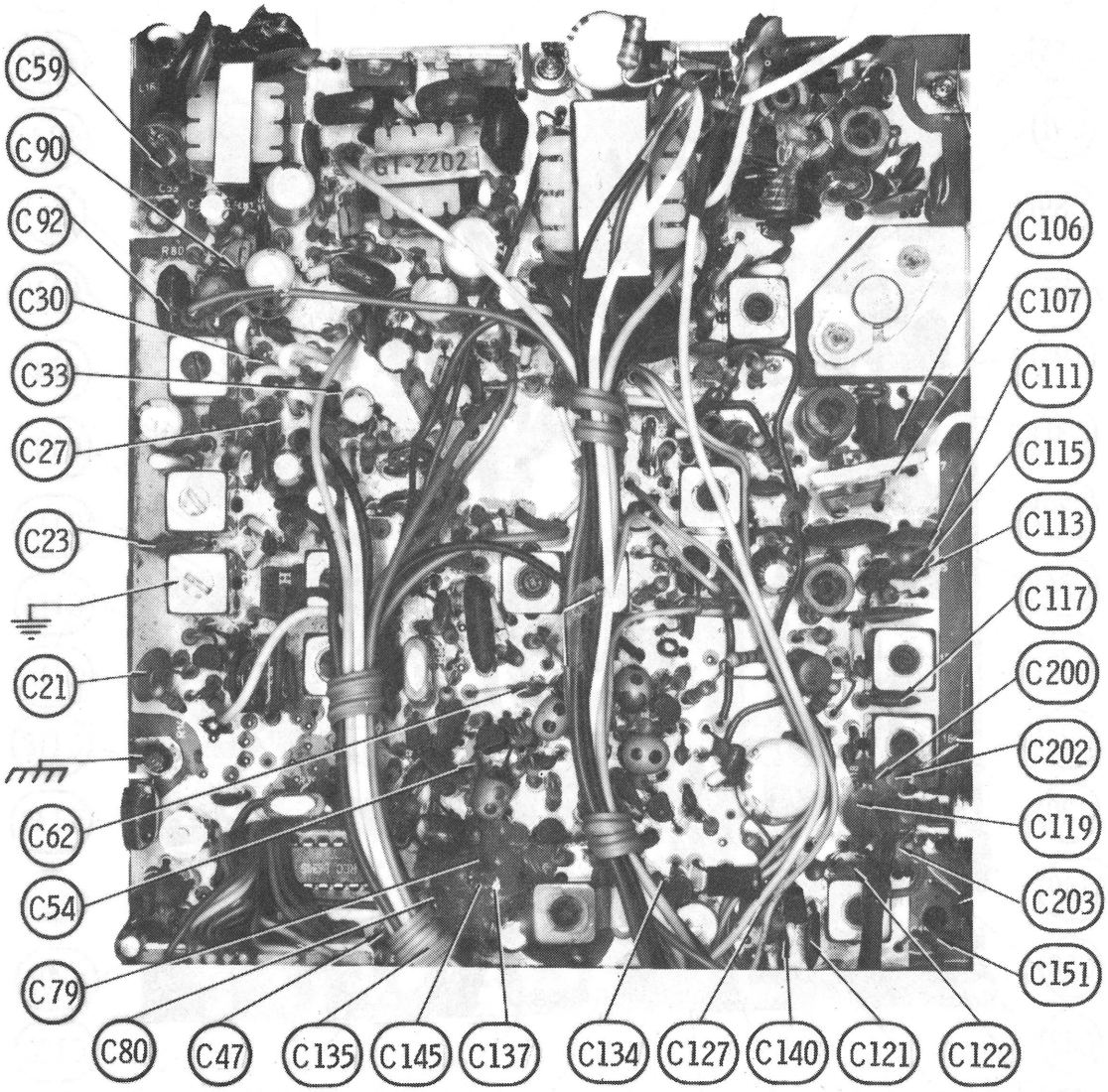
C59
C90
C92
C30
C33
C27
C23
C21
C62
C54
C79
C80
C47
C135
C145
C137
C134
C127
C140
C121
C122
C151
C203
C119
C202
C200
C117
C113
C115
C111
C107
C106

MAIN BOARD

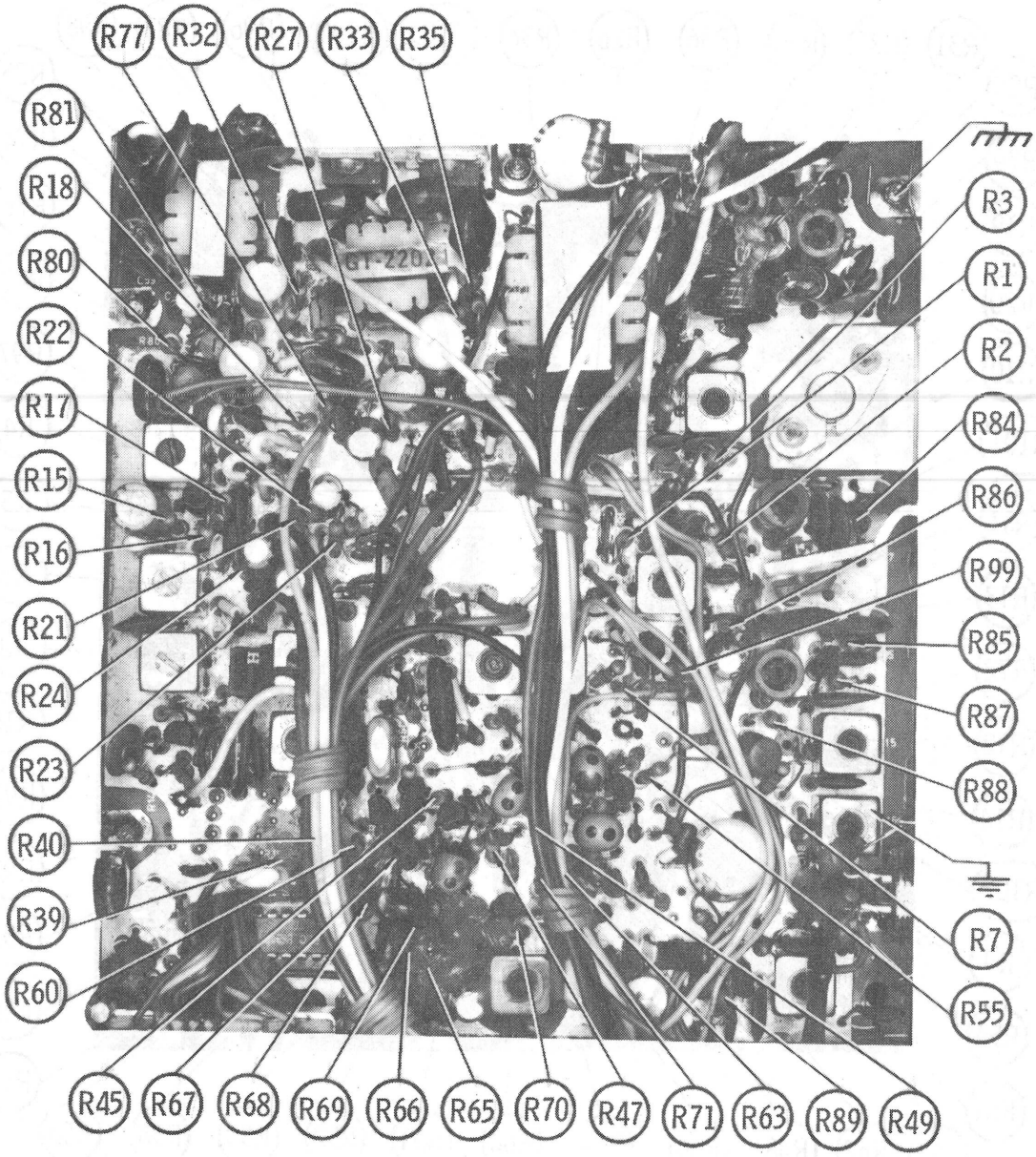
R77
R32
R27
R33
R35
R81
R18
R80
R22
R17
R15
R16
R21
R24
R23
R40
R39
R60
R45
R67
R68
R69
R66
R65
R70
R47
R71
R63
R89
R49
R55
R7
R88
R87
R85
R99
R86
R84
R2
R1
R3

MAIN BOARD

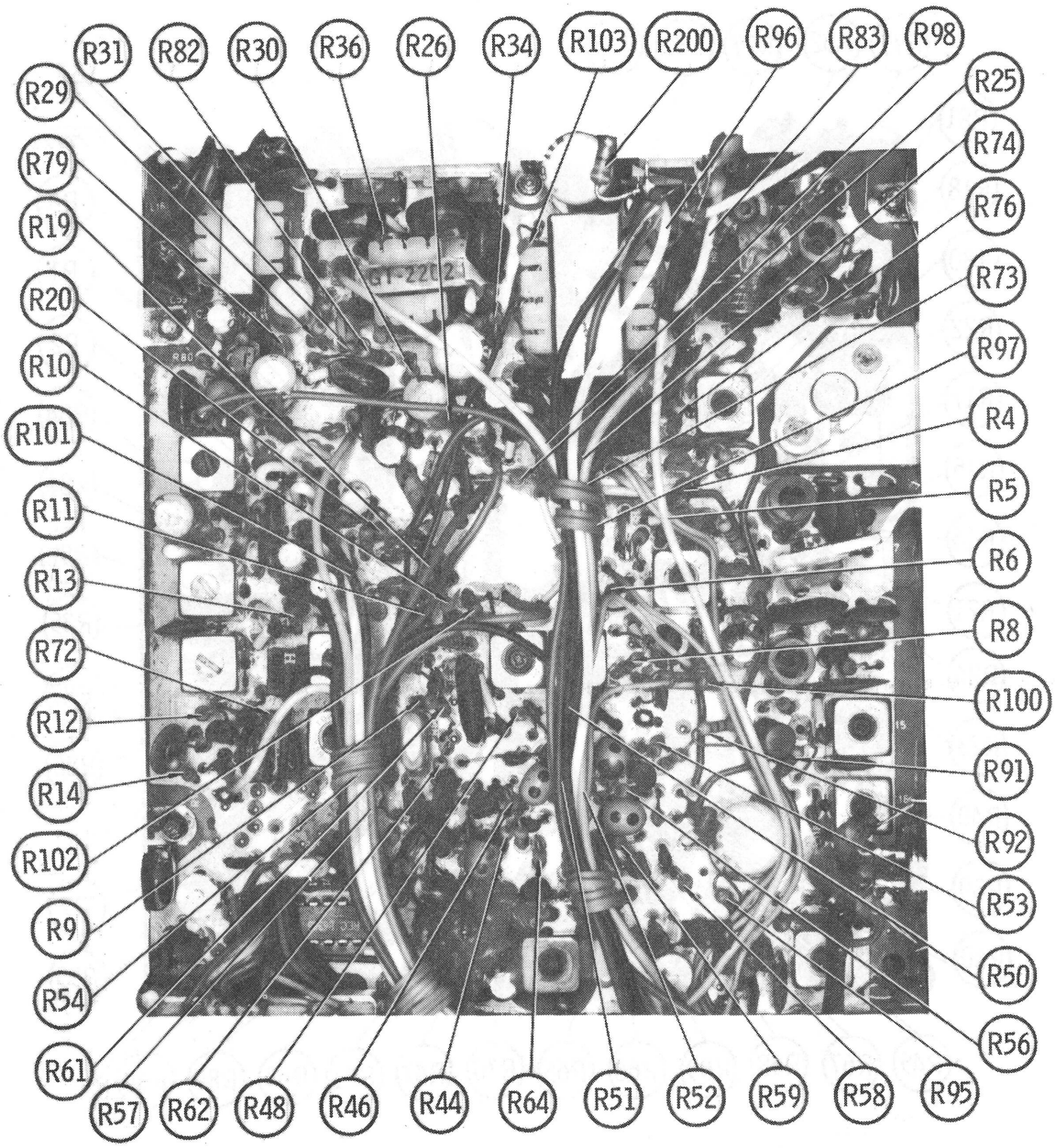
R31
R82
R30
R36
R26
R34
R103
R200
R96
R83
R98
R29
R25
R79
R74
R19
R76
R20
R73
R10
R97
R101
R4
R11
R5
R13
R6
R72
R8
R12
R100
R14
R91
R102
R92
R9
R53
R54
R50
R61
R56
R57
R62
R48
R46
R44
R64
R51
R52
R59
R58
R95

MAIN BOARD

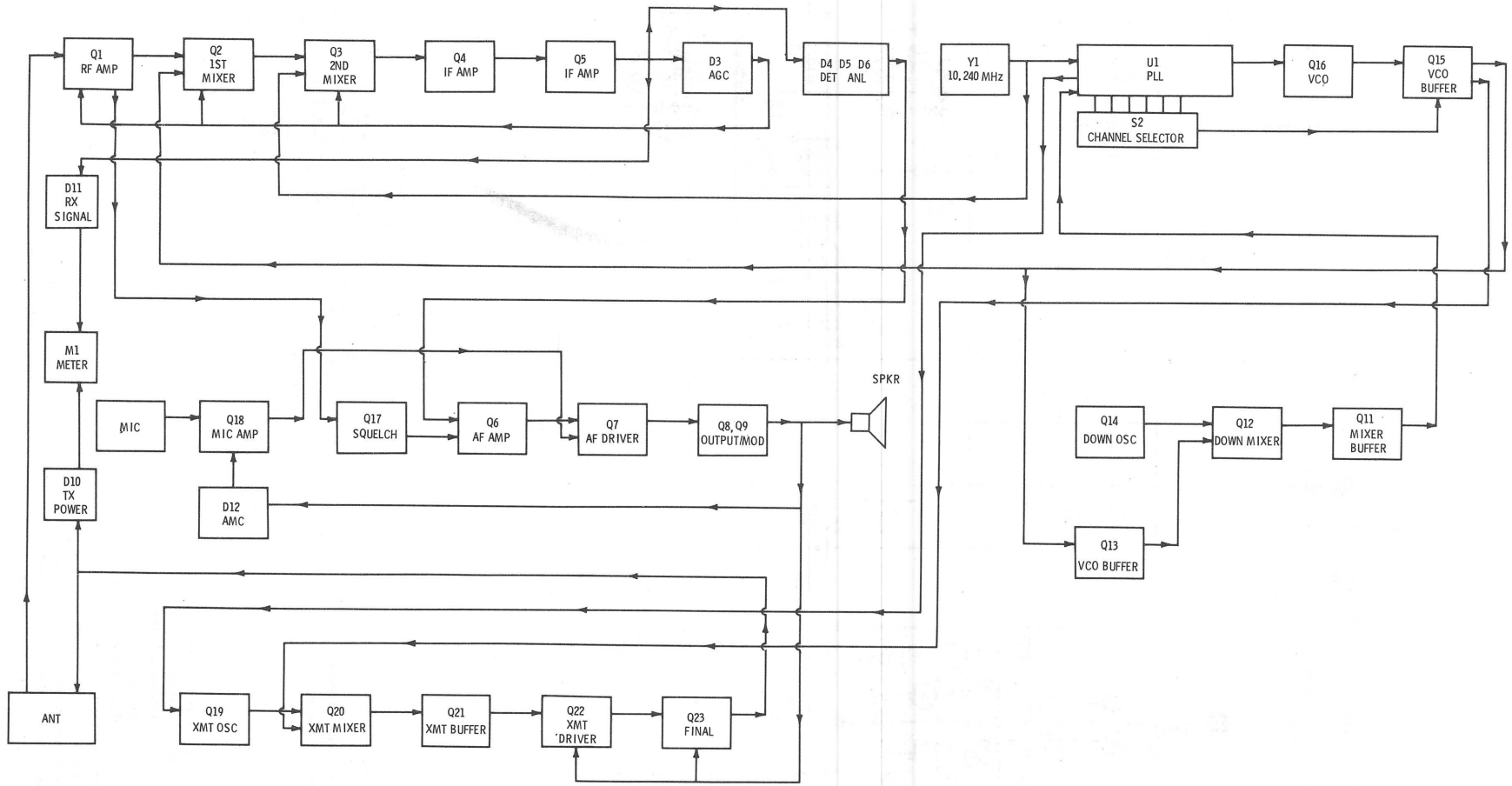

BLOCK DIAGRAM

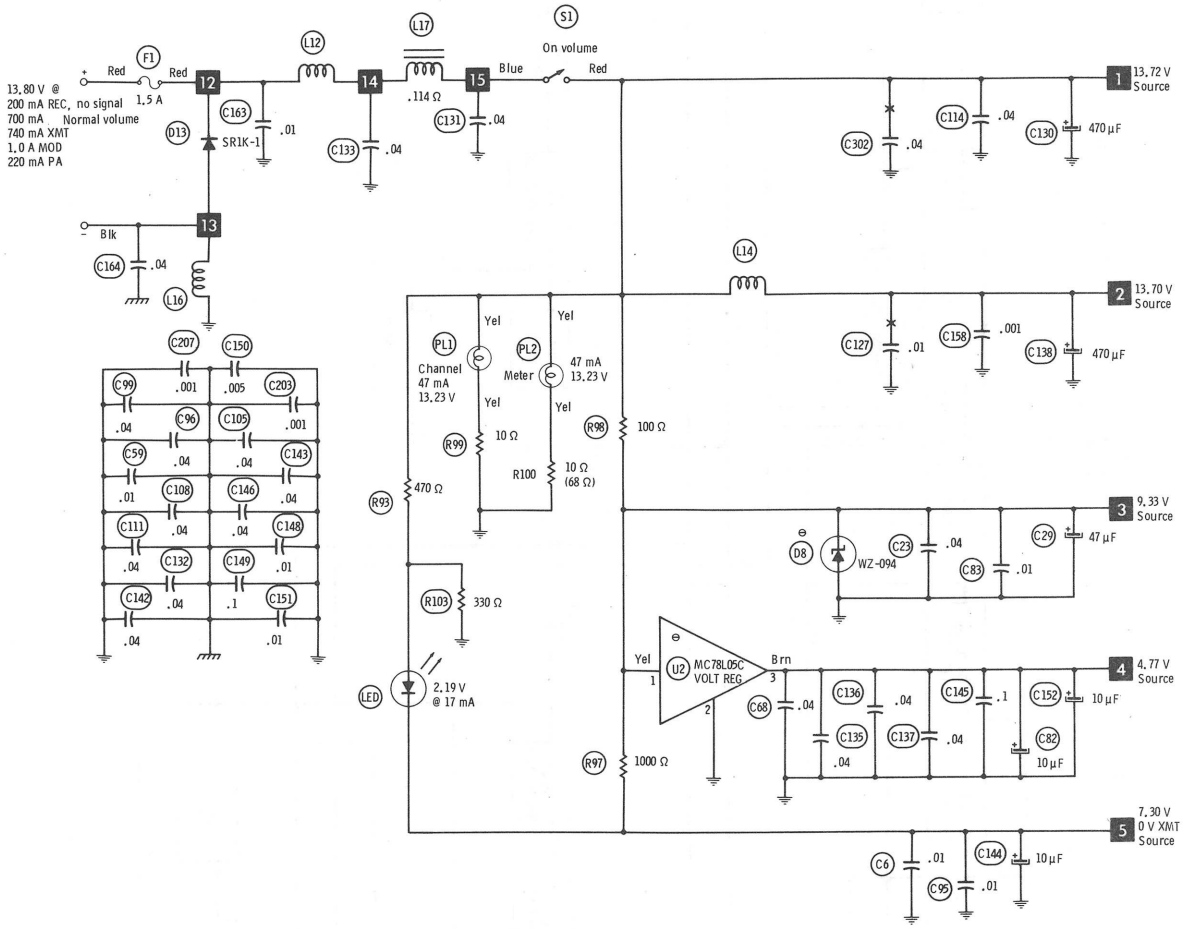

Terminal Guides

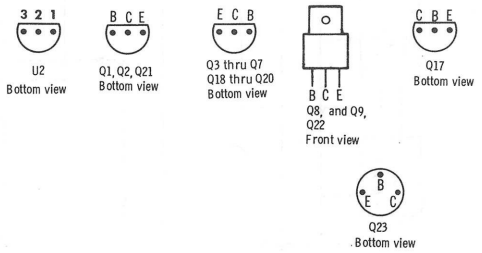

—✖— Circuitry not used in some versions
- - - Circuitry used in some versions
⊖ See parts list
※ Nominal value
⏚ Ground
Chassis
▽ Common tie point

Measurements made in Channel 1 with switching as shown unless noted.
Item numbers in rectangles appear in the alignment/adjustment instructions.
Supply voltage maintained as shown at input.
Voltages measured with digital meter, no signal.
Controls adjusted for normal operation.
Arrow at control indicates direction of advance.
Terminal identification may not be found on unit.
Resistors are 1/2W or less, 5% unless noted.
Value in ( ) used in some versions.

A PHOTOFACT STANDARD NOTATION SCHEMATIC
WITH CIRCUITRACE®

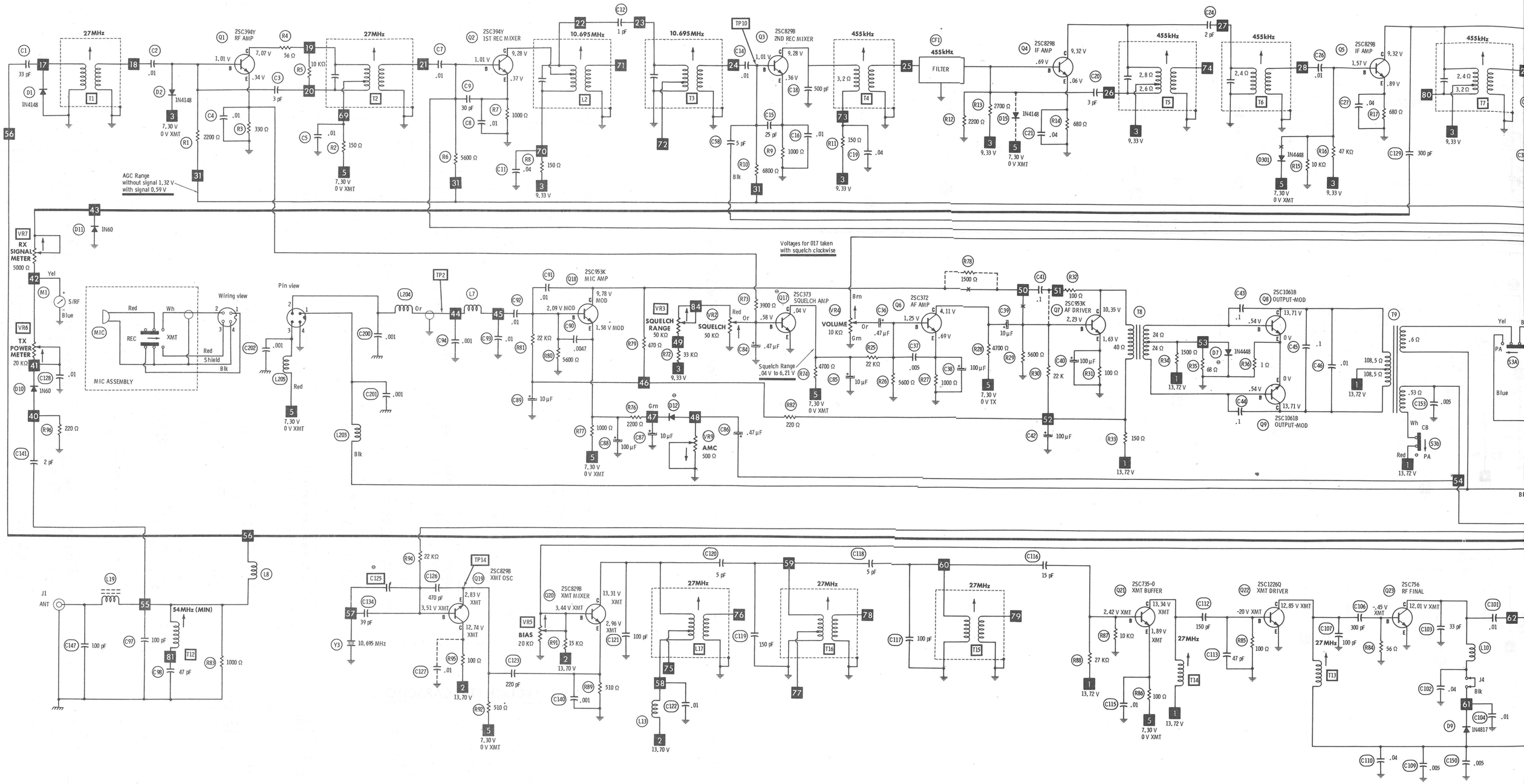
27MHz
Q1 2SC394Y RF AMP
Q2 2SC394Y 1ST REC MIXER
10.695MHz
Q3 2SC829B 2ND REC MIXER
455kHz
FILTER
Q4 2SC829B IF AMP
Q5 2SC829B IF AMP
AGC Range without signal 1.32 V with signal 0.59 V
RX SIGNAL METER 5000 Ω
TX POWER METER 20 KΩ
MIC ASSEMBLY
Wiring view
Pin view
Voltages for 017 taken with squelch clockwise
Q6 2SC953K MIC AMP
SQUELCH RANGE 50 KΩ
SQUELCH 50 KΩ
Q17 2SC373 SQUELCH AMP
Squelch Range .04 V to 6.21 V
VOLUME 10 KΩ
Q7 2SC372 AF AMP
Q8 2SC953K AF DRIVER
Q8 2SC1061B OUTPUT-MOD
Q9 2SC1061B OUTPUT-MOD
AMC 500 Ω
54MHz (MIN)
Q19 2SC829B XMT OSC
Q20 2SC829B XMT MIXER
BIAS 20 KΩ
Q21 2SC735-0 XMT BUFFER
Q22 2SC1226Q XMT DRIVER
Q23 2SC756 RF FINAL

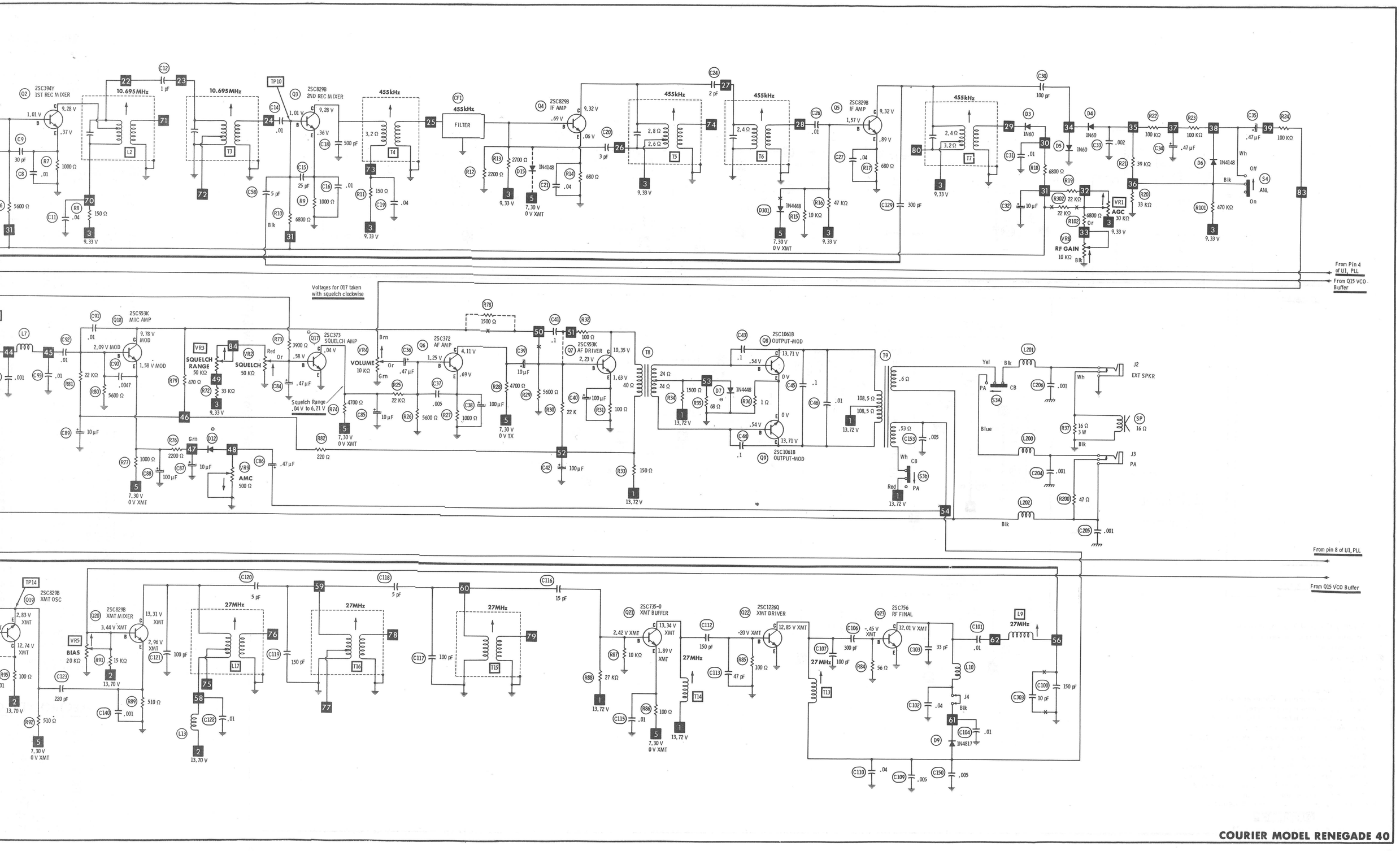

COURIER MODEL RENEGADE 40

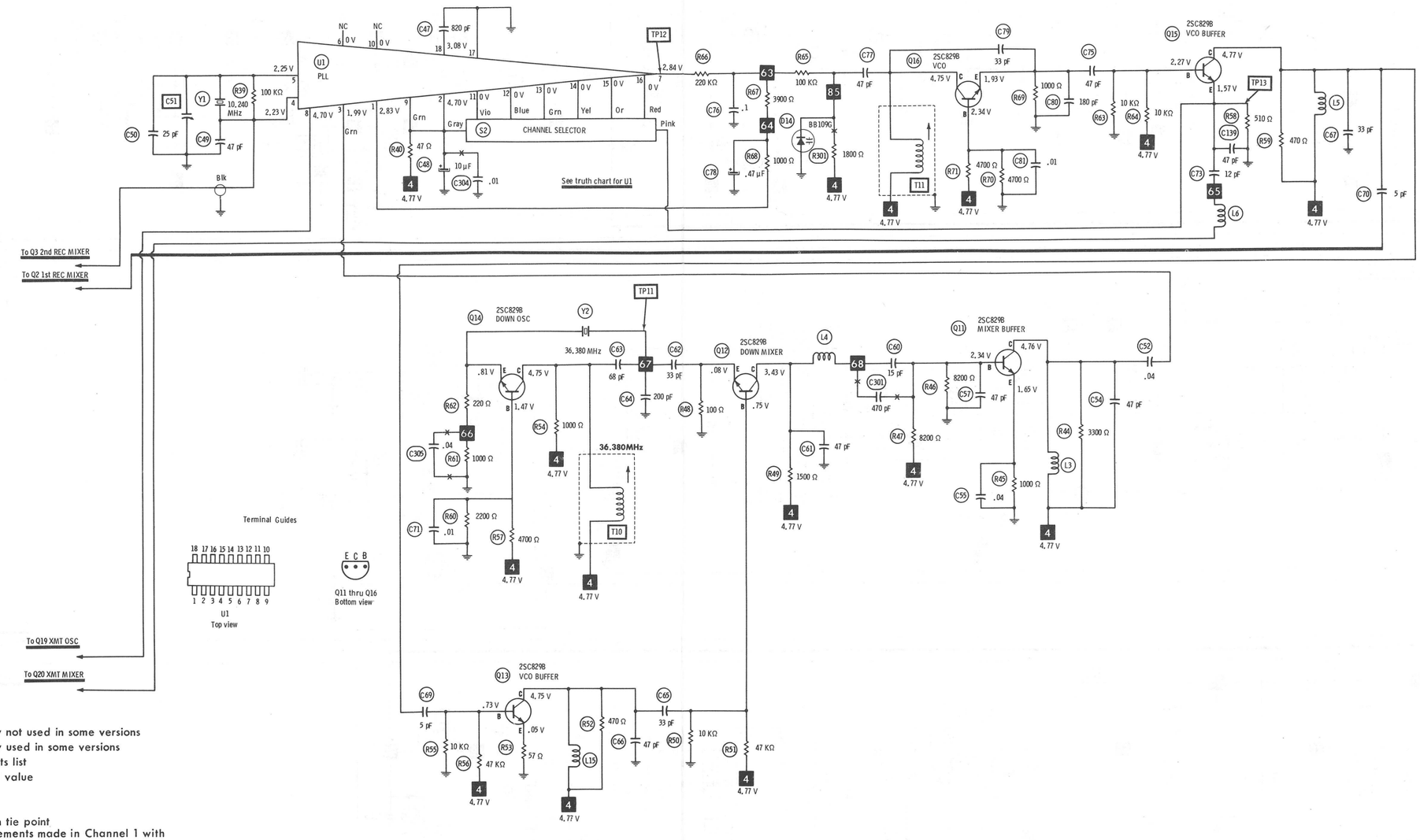

- Circuitry not used in some versions
- Circuitry used in some versions
- See parts list
- Nominal value
- Ground
- Chassis
- Common tie point

Measurements made in Channel 1 with switching as shown unless noted.
Item numbers in rectangles appear in the alignment/adjustment instructions.
Supply voltage maintained as shown at input.
Voltages measured with digital meter, no signal.
Controls adjusted for normal operation.
Arrow at control indicates direction of advance.
Terminal identification may not be found on unit.
Resistors are 1/2W or less, 5% unless noted.
Value in ( ) used in some versions.

A PHOTOFACT STANDARD NOTATION SCHEMATIC WITH CIRCUITRACE®

PARTS LIST AND

(When ordering parts, state

WIRING DATA

General-use Hook-up Wire
Shielded Hook-up Wire (s
(b
Speaker Cable (available
Bonding Strap . . . .
AC Power Cord . . . .

SEMICONDUCTORS (Sele

ITEM No.	TYPE No.	MFGR. PART No.	
D1	1N4148	2019-45	G
D2	1N4148	2019-45	G
D3	1N60	294-42-9	T
D4	1N60	294-42-9	T
D5	1N60	294-42-9	T
D6	1N4148	2019-45	G
D7	1N4448	1042-16	G
D8	WZ-094	2049-34	G
D9	1N4817	2049-33	G
D10	1N60	294-42-9	T
D11	1N60	294-42-9	T
D12	1N60	294-42-9	T
D13	SR1K-1	1080-08	G
	1N4001		G
D14	BB109G	2049-32	G
D15	1N4148	2019-45	G
Q1	2SC394Y	1080-01	G
Q2	2SC394Y	1080-01	G
Q3	2SC829B		G
	2SC839F	1080-20	G
Q4	2SC829B		G
	2SC839F	1080-20	G
Q5	2SC829B		G
	2SC839F	1080-20	G
Q6	2SC372Y	2017-117	G
Q7	2SC953K		G
	2SC733Y	1080-03	G
Q8	2SC1061B		G
	2SC1173-0	1080-130	G
Q9	2SC1061B		G
	2SC1173-0	1080-130	G
Q11	2SC829B		G
	2SC839F	1080-20	G
Q12	2SC829B		G
	2SC839F	1080-20	G
Q13	2SC829B		G
	2SC839F	1080-20	G
Q14	2SC829B		G
	2SC839F	1080-20	G
Q15	2SC829B		G
	2SC839F	1080-20	G
Q16	2SC829B		G
	2SC839F	1080-20	G
Q17	2SC373	296-98-9	G
Q18	2SC953K		G
	2SC945R	1080-21	G
Q19	2SC829B		G
	2SC839F	1080-20	G
Q20	2SC829B		G
	2SC839F	1080-20	G
Q21	2SC735-0	1080-07	G
Q22	2SC1226Q	2041-03 (13)	
Q23	2SC756		G
	2SC756-2-4	1080-05	G
U1		2049-01	
U2	MC78L05C	2049-03	

* Lead configuration may vary f
(13) 10 Watts @ 2 Amps.

ELECTROLYTIC C

ITEM No.	RATING
C29	47 10V
C32	10 10V
C34	.47 16V
C35	.47 16V
C36	.47 16V
C38	100 10V
C39	10 10V
C40	100 10V
C42	100 16V
C48	10 10V

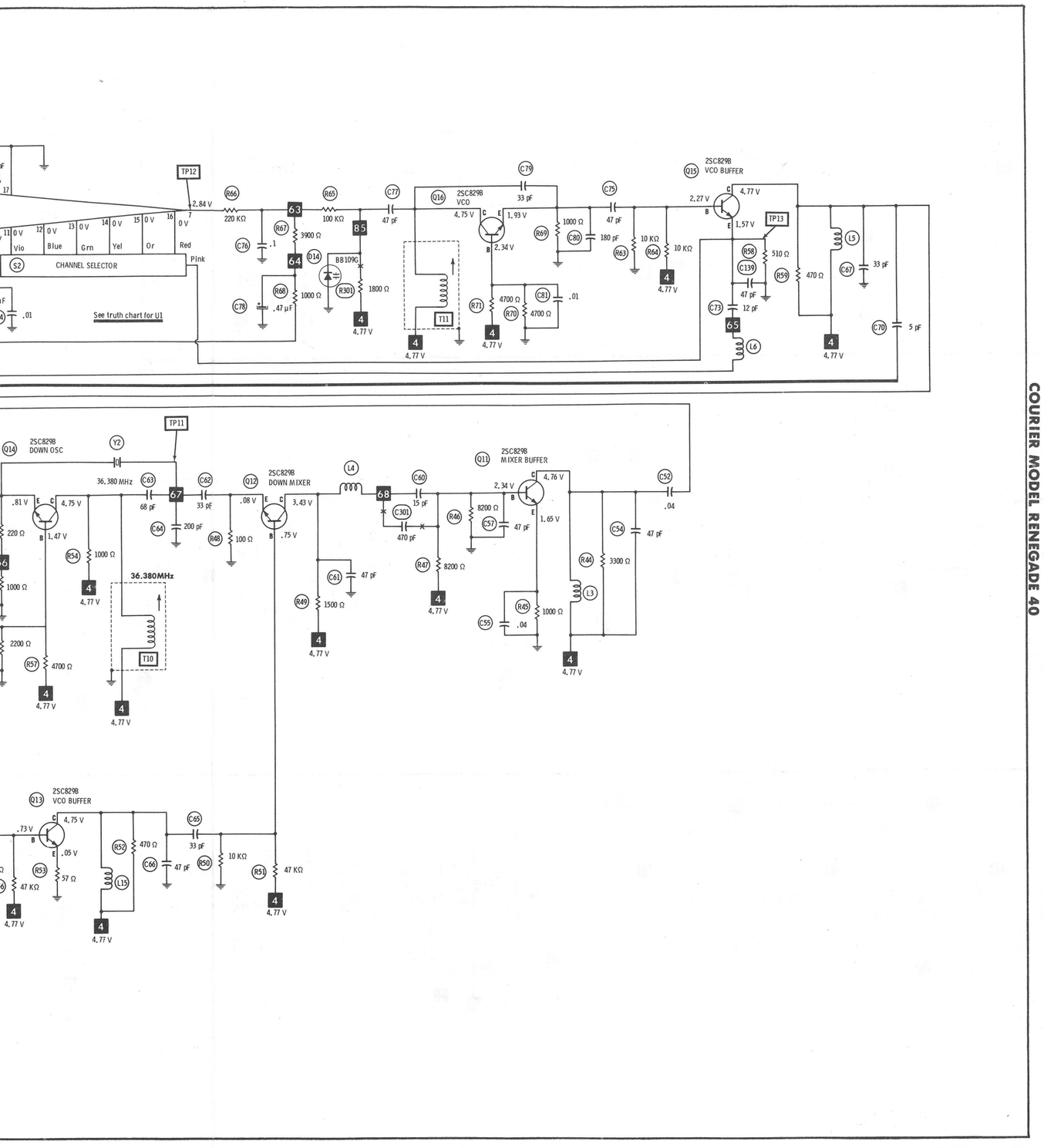

PARTS LIST AND DESCRIPTION

(When ordering parts, state Model, Part Number, and Description.)

WIRING DATA

General-use Hook-up Wire (available in 5 colors)	BELDEN No. 8523	Coiled Microphone Cable	
Shielded Hook-up Wire (spiral wrapped)	BELDEN No. 8421	3-conductor (1 shielded) 23AWG	BELDEN No. 9471 (5')
(braided)	BELDEN No. 8401		BELDEN No. 8497 (6')
Speaker Cable (available in 4 colors)	BELDEN No. 8782		BELDEN No. 9472 (7-1/2')
Bonding Strap	BELDEN No. 8672	28AWG	BELDEN No. 9466 (6')
AC Power Cord . . . . . (6')	BELDEN No. 17106	31AWG	BELDEN No. 9468 (10')
(9')	BELDEN No. 17109	4-conductor (unshielded) 23AWG	BELDEN No. 8415 (6')
		5-conductor (1 shielded) 28AWG	BELDEN No. 9467 (6')
			BELDEN No. 9465 (7-1/2')

SEMICONDUCTORS (Select replacement transistor for best results)

ITEM No.	TYPE No.	MFGR. PART No.	REPLACEMENT DATA									
			GENERAL ELECTRIC PART No.	MALLORY PART No.	MOTOROLA PART No.	RAYTHEON PART No.	RCA PART No.	SPRAGUE PART No.	SYLVANIA PART No.	THORDARSON PART No.	WORKMAN PART No.	ZENITH PART No.
D1	1N4148	2019-45	GE-300	PTC214	HEPR0602	RE 52	SK3100	RT-218	ECG177		WEP1062	
D2	1N4148	2019-45	GE-300	PTC214	HEPR0602	RE 52	SK3100	RT-218	ECG177		WEP1062	
D3	1N60	294-42-9	1N60	PTC206	HEPR9135	RE 47	SK3088	RT-263	ECG109	1N60	WEP134	ZEN-430
D4	1N60	294-42-9	1N60	PTC206	HEPR9135	RE 47	SK3088	RT-263	ECG109	1N60	WEP134	ZEN-430
D5	1N60	294-42-9	1N60	PTC206	HEPR9135	RE 47	SK3088	RT-263	ECG109	1N60	WEP134	ZEN-430
D6	1N4148	2019-45	GE-300	PTC214	HEPR0602	RE 52	SK3100	RT-218	ECG177		WEP1062	
D7	1N4448	1042-16	GE-300	PTC214	HEPR0602	RE 52	SK3100	RT-218	ECG177		WEP1062	
D8	WZ-094	2049-34	GEZD-9.1	ZM9.1B		RE 114	SK3060	RT-240	ECG5018	1N4739A	WEP1419	103-279-18
D9	1N4817	2049-33	GE-504A	PTC202	HEPR0054	RE 49	SK3017A	RT-215	ECG116	1N4007	WEP158	212-76
D10	1N60	294-42-9	1N60	PTC206	HEPR9135	RE 47	SK3088	RT-263	ECG109	1N60	WEP134	ZEN-430
D11	1N60	294-42-9	1N60	PTC206	HEPR9135	RE 47	SK3088	RT-263	ECG109	1N60	WEP134	ZEN-430
D12	1N60	294-42-9	1N60	PTC206	HEPR9135	RE 47	SK3088	RT-263	ECG109	1N60	WEP134	ZEN-430
D13	SR1K-1	1080-08	GE-504A	PTC202	HEPR0054	RE 49	SK3017A	RT-215	ECG116	1N4007	WEP158	212-76
	1N4001		GE-504A	PTC202	HEPR0054	RE 49	SK3017A	RT-215	ECG116	1N4007	WEP158	212-76
D14	BB109G	2049-32	GE-90		HEPR2503			RT-262	ECG614		WEP200	ZEN-453
D15	1N4148	2019-45	1N60	PTC206	HEPR9135	RE 47	SK3088	RT-263	ECG109	1N60	WEP134	ZEN-430
Q1	2SC394Y	1080-01	GE-61*	PTC121*	2SC394	RE 9	SK3018*	RT-309	ECG229*	2SC394	WEP394	ZEN-114
Q2	2SC394Y	1080-01	GE-61*	PTC121*	2SC394	RE 9	SK3018*	RT-309	ECG229*	2SC394	WEP394	ZEN-114
Q3	2SC829B		GE-20*	PTC121*	2SC829	RE 9*	SK3122	RT-308	ECG229*	2SC829	WEP829	ZEN-127
	2SC839F	1080-20	GE-61*	PTC132*	2SC839	RE 13*	SK3018*	RT-308	ECG123A*	2SC839	WEP736*	ZEN-120
Q4	2SC829B		GE-20*	PTC121*	2SC829	RE 9*	SK3122	RT-308	ECG229*	2SC829	WEP829	ZEN-127
	2SC839F	1080-20	GE-61*	PTC132*	2SC839	RE 13*	SK3018*	RT-308	ECG123A*	2SC839	WEP736*	ZEN-120
Q5	2SC829B		GE-20*	PTC121*	2SC829	RE 9*	SK3122	RT-308	ECG229*	2SC829	WEP829	ZEN-127
	2SC839F	1080-20	GE-61*	PTC132*	2SC839	RE 13*	SK3018*	RT-308	ECG123A*	2SC839	WEP736*	ZEN-120
Q6	2SC372Y	2017-117	GE-61*	PTC121*	2SC372	RE 13*	SK3122	RT-308	ECG123A*	2SC372	WEP372	ZEN-114
Q7	2SC953K		GE-62	PTC139*	2SC733	RE 192	SK3122	RT-302	ECG199	2SC733	WEP66	ZEN-114
	2SC733Y	1080-03	GE-62	PTC139*	2SC733	RE 192	SK3122	RT-302	ECG199	2SC733	WEP66	ZEN-114
Q8	2SC1061B		GE-66	PTC154	2SC1061	RE 21	SK3054	RT-197	ECG152	2SC1061	WEP745	
	2SC1173-0	1080-130	GE-215	PTC186	2SC1173	RE 201	SK3197	RT-160	ECG236	2SC1173	WEP840	
Q9	2SC1061B		GE-66	PTC154	2SC1061	RE 21	SK3054	RT-197	ECG152	2SC1061	WEP745	
	2SC1173-0	1080-130	GE-215	PTC186	2SC1173	RE 201	SK3197	RT-160	ECG236	2SC1173	WEP840	
Q11	2SC829B		GE-20*	PTC121*	2SC829	RE 9*	SK3122	RT-308	ECG229*	2SC829	WEP829	ZEN-127
	2SC839F	1080-20	GE-61*	PTC132*	2SC839	RE 13*	SK3018*	RT-308	ECG123A*	2SC839	WEP736*	ZEN-120
Q12	2SC829B		GE-20*	PTC121*	2SC829	RE 9*	SK3122	RT-308	ECG229*	2SC829	WEP829	ZEN-127
	2SC839F	1080-20	GE-61*	PTC132*	2SC839	RE 13*	SK3018*	RT-308	ECG123A*	2SC839	WEP736*	ZEN-120
Q13	2SC829B		GE-20*	PTC121*	2SC829	RE 9*	SK3122	RT-308	ECG229*	2SC829	WEP829	ZEN-127
	2SC839F	1080-20	GE-61*	PTC132*	2SC839	RE 13*	SK3018*	RT-308	ECG123A*	2SC839	WEP736*	ZEN-120
Q14	2SC829B		GE-20*	PTC121*	2SC829	RE 9*	SK3122	RT-308	ECG229*	2SC829	WEP829	ZEN-127
	2SC839F	1080-20	GE-61*	PTC132*	2SC839	RE 13*	SK3018*	RT-308	ECG123A*	2SC839	WEP736*	ZEN-120
Q15	2SC829B		GE-20*	PTC121*	2SC829	RE 9*	SK3122	RT-308	ECG229*	2SC829	WEP829	ZEN-127
	2SC839F	1080-20	GE-61*	PTC132*	2SC839	RE 13*	SK3018*	RT-308	ECG123A*	2SC839	WEP736*	ZEN-120
Q16	2SC829B		GE-20*	PTC121*	2SC829	RE 9*	SK3122	RT-308	ECG229*	2SC829	WEP829	ZEN-127
	2SC839F	1080-20	GE-61*	PTC132*	2SC839	RE 13*	SK3018*	RT-308	ECG123A*	2SC839	WEP736*	ZEN-120
Q17	2SC373	296-98-9	GE-212	PTC121*	2SC373	RE 192	SK3122	RT-105	ECG199	2SC373	WEP373	ZEN-119
Q18	2SC953K		GE-212	PTC121*	2SC945	RE 192	SK3124	RT-107A	ECG199	2SC945	WEP1945	121-Z9000
	2SC945R	1080-21	GE-212	PTC121*	2SC945	RE 192	SK3124	RT-107A	ECG199	2SC945	WEP1945	121-Z9000
Q19	2SC829B		GE-20*	PTC121*	2SC829	RE 9*	SK3122	RT-308	ECG229*	2SC829	WEP829	ZEN-127
	2SC839F	1080-20	GE-61*	PTC132*	2SC839	RE 13*	SK3018*	RT-308	ECG123A*	2SC839	WEP736*	ZEN-120
Q20	2SC829B		GE-20*	PTC121*	2SC829	RE 9*	SK3122	RT-308	ECG229*	2SC829	WEP829	ZEN-127
	2SC839F	1080-20	GE-61*	PTC132*	2SC839	RE 13*	SK3018*	RT-308	ECG123A*	2SC839	WEP736*	ZEN-120
Q21	2SC735-0	1080-07	GE-210*	PTC123*	2SC735	RE 13*	SK3122	RT-308*	ECG289	2SC735	WEP735A	ZEN-127
Q22	2SC1226Q	2041-03 (13)	GE-215	PTC186	2SC1226	RE 203	SK3197	RT-166	ECG186A	2SC1226	WEP900	
Q23	2SC756		GE-46	PTC158		RE 206		RT-306F	ECG282		WEP909	
	2SC756-2-4	1080-05	GE-46	PTC158		RE 206		RT-306F	ECG282		WEP909	
U1		2049-01										
U2	MC78L05C	2049-03				RE 387-IC			ECG977			

* Lead configuration may vary from original.
(13) 10 Watts @ 2 Amps.

ELECTROLYTIC CAPACITORS

ITEM No.	RATING	REPLACEMENT DATA				
		MFGR. PART No.	CORNELL-DUBILIER PART No.	MALLORY PART No.	SPRAGUE PART No.	
					Q-LINE	GENERAL LINE
C29	47 10V	1080-59	PC50-16	VTT47D16	QV1-73	EV-1226
C32	10 10V	1080-58	PC10-25	VTT10B25	QV1-41	EV-1222
C34	.47 16V	1080-133	PC1-50	VTTR47A63	QV1-3	EV-1610
C35	.47 16V	1080-133	PC1-50	VTTR47A63	QV1-3	EV-1610
C36	.47 16V	1080-133	PC1-50	VTTR47A63	QV1-3	EV-1610
C38	100 10V	1080-60	PC100-10	VTT100E10	QV1-93	EV-1130
C39	10 10V	1080-58	PC10-25	VTT10B25	QV1-41	EV-1222
C40	100 10V	1080-60	PC100-10	VTT100E10	QV1-93	EV-1130
C42	100 16V	1042-127	PC100-16	VTT100F16	QV1-95	EV-1230
C48	10 10V	1080-58	PC10-25	VTT10B25	QV1-41	EV-1222

ELECTROLYTIC CAPACITORS(cont)

ITEM No.	RATING	REPLACEMENT DATA				
		MFGR. PART No.	CORNELL-DUBILIER PART No.	MALLORY PART No.	SPRAGUE PART No.	
					Q-LINE	GENERAL LINE
C78	.47 35V	2049-38		TDC474M050EL	QDT1-19	SD50-R479
C82	10 10V	1080-58	PC10-25	VTT10B25	QV1-41	EV-1222
C84	.47 16V	1080-133	PC1-50	VTTR47A63	QV1-3	EV-1610
C85	10 10V	1080-58	PC10-25	VTT10B25	QV1-41	EV-1222
C86	.47 35V	2049-38		TDC474M050EL	QDT1-19	SD50-R479
C87	10 10V	1080-58	PC10-25	VTT10B25	QV1-41	EV-1222
C88	100 10V	1080-60	PC100-10	VTT100E10	QV1-93	EV-1130
C89	10 10V	1080-58	PC10-25	VTT10B25	QV1-41	EV-1222
C130	470 16V	1042-124	PC500-16	VTT470K16	QV1-151	EV-1250
C138	470 16V	1042-124	PC500-16	VTT470K16	QV1-151	EV-1250
C144	10 10V	1080-58	PC10-25	VTT10B25	QV1-41	EV-1222
C152	10 10V	1080-58	PC10-25	VTT10B25	QV1-41	EV-1222

CAPACITORS

ITEM No.	RATING	MFGR. PART No.	REPLACEMENT DATA				
			CENTRALAB PART No.	CORNELL-DUBILIER PART No.	MALLORY PART No.	SPRAGUE PART No.	
						Q-LINE	GENERAL LINE
C1	33 50V		DTZ-33	NP033	CN0433		10TCC-Q33
C2	.01 50V		DC-103	MGP01	TA110	QC2-141	TG-S10
C3	3 NPO 50V		DTZ-3R3	NP03P3	CN0533		10TCC-V33
C4	.01 50V		DC-103	MGP01	TA110	QC2-141	TG-S10
C5	.01 50V		DC-103	MGP01	TA110	QC2-141	TG-S10
C6	.01 50V		DC-103	MGP01	TA110	QC2-141	TG-S10
C7	.01 50V		DC-103	MGP01	TA110	QC2-141	TG-S10
C8	.01 50V		DC-103	MGP01	TA110	QC2-141	TG-S10
C9	30 50V		DTZ-33	NP033	CN0433		10TCC-Q33
C11	.04				GP140		5GA-S40
C12	1 NPO 50V				CN0510		10TCC-V10
C14	.01 50V		DC-103	MGP01	TA110	QC2-141	TG-S10
C15	25 50V		DTZ-25	NP025	CN0425		10TCC-Q25
C16	.01 50V		DC-103	MGP01	TA110	QC2-141	TG-S10
C18	500 50V			CD15FD511J03	SX351	QW1-43	MWA-511
C19	.04 50V				GP140		5GA-S40
C20	3 NPO 50V		DTZ-3R3	NP03R3	CN0533		10TCC-V33
C21	.01 50V			WMF1S1	EWF1A110	QF1-91	1PB-S10
C23	.04 50V				GP140		5GA-S40
C24	2 NPO 50V		DTZ-2R2	NP02P2	CN0522		10TCC-V22
C26	.01 50V		DC-103	MGP01	TA110	QC2-141	TG-S10
C27	.04 50V				GP140		5GA-S40
C30	100 NPO 50V		DTZ-100	NP0100	CN0310		10TCC-T10
C31	.01 50V		DC-103	MGP01	TA110	QC2-141	TG-S10
C33	.002 50V		DD-202	GP2000	GP220	QC2-93	5GA-D20
C37	.005 50V		DC-502	MGP005	TA250	QC2-123	TG-D50
C41	.1 50V			DPMS2P1	EWF1A010	QF1-215	1PB-P10
C43	.1 50V			DPMS2P1	EWF1A010	QF1-215	1PB-P10
C44	.1 50V			DPMS2P1	EWF1A010	QF1-215	1PB-P10
C45	.1 50V			DPMS2P1	EWF1A010	QF1-215	1PB-P10
C46	.1 50V		DC-104	MGP1	TA010	QC2-233	TG-P10
C47	820 50V			CD19FD821J03	SX382		MWC-821
C49	47 NPO 50V		DTZ-47	NP047	CN0447		10TCC-Q47
C50	25 NPO 50V		DTZ-25	NP025	CN0425		10TCC-Q25
C51	5-25 50V	1040-145					
C52	.04 50V				GP140		5GA-S40
C54	47 50V		DTZ-47	NP047	CN0447		10TCC-Q47
C55	.04 50V				GP140		5GA-S40
C57	47 50V		DTZ-47	NP047	CN0447		10TCC-Q47
C58	5 50V		DTZ-4R7	NP04P7	CN0547		10TCC-V47
C59	.01 50V		DC-103	MGP01	TA110	QC2-141	TG-S10
C60	15 50V		DTZ-15	NP015	CN0415		10TCC-Q15
C61	47 50V		DTZ-47	NP047	CN0447		10TCC-Q47
C62	33 50V		DTZ-33	NP033	CN0433		10TCC-Q33
C63	68 NPO 50V		DTZ-68	NP068	CN0468		10TCC-Q68
C64	200 NPO 50V		DTZ-220				10TCC-T22
C65	33 50V		DTZ-33	NP033	CN0433		10TCC-Q33
C66	47 50V		DTZ-47	NP047	CN0447		10TCC-Q47
C67	33 50V		DTZ-33	NP033	CN0433		10TCC-Q33
C68	.04 50V				GP140		5GA-S40
C69	5 50V		DTZ-4R7	NP04P7	CN0547		10TCC-V47
C70	5 50V		DTZ-4R7	NP04P7	CN0547		10TCC-V47
C71	.01 50V		DC-103	MGP01	TA110	QC2-141	TG-S10
C73	12 50V				CN0412		10TCC-Q12
C75	47 50V		DTZ-47	NP047	CN0447		10TCC-Q47
C76	.1 50V			DPMS2P1	EWF1A010	QF1-215	1PB-P10
C77	47 NPO 50V		DTZ-47	NP047	CN0447		10TCC-Q47
C79	33 NPO 50V		DTZ-33	NP033	CN0433		10TCC-Q33
C80	80 NPO 50V		DTZ-82	NP082	CN0482		10TCC-Q82
C81	.01 50V		DC-103	MGP01	TA110	QC2-141	TG-S10
C83	.01 50V		DC-103	MGP01	TA110	QC2-141	TG-S10
C90	.0047 50V			WMF1D47	EWF1A247	QF1-57	1PB-D47
C91	.01 50V			WMF1S1	EWF1A110	QF1-91	1PB-S10
C92	.1 50V			DPMS2P1	EWF1A010	QF1-215	1PB-P10
C93	.01 50V		DC-103	MGP01	TA110	QC2-141	TG-S10
C94	.001 50V		DD-102G	GP1000	GP210	QC2-81	5GA-D10

PARTS LIST AND DESCRIPTION (CONTINUED)

(When ordering parts, state Model, Part Number, and Description.)

CAPACITORS (cont)

ITEM No.	RATING	MFGR. PART No.	REPLACEMENT DATA				
			CENTRALAB PART No.	CORNELL-DUBILIER PART No.	MALLORY PART No.	SPRAGUE PART No.	
						Q-LINE	GENERAL LINE
C95	.01 50V		DC-103	MGP01	TA110	QC2-141	TG-S10
C96	.04 50V				GP140		5GA-S40
C97	100 50V		DD-101	GP100	GP310		10TS-T10
C98	47 NPO 50V		DTZ-47	NP047	CN0447		10TCC-Q47
C99	.04 50V				GP140		5GA-S40
C100	150 NPO 50V		DTZ-150		CN0315		10TCC-T15
C101	.01 50V		DC-103	MGP01	TA110	QC2-141	TG-S10
C102	.04 50V				GP140		5GA-S40
C103	33 50V		DTZ-33	NP033	CN0433		10TCC-Q33
C104	.01 50V		DC-103	MGP01	TA110	QC2-141	TG-S10
C105	.04 50V				GP140		5GA-S40
C106	300 50V		DD-301	GP300	GP330		10TS-T30
C107	100 50V		DD-101	GP100	GP310		10TS-T10
C108	.04 50V				GP140		5GA-S40
C109	.005 50V		DC-502	MGP005	TA250	QC2-123	TG-D50
C110	.04 50V				GP140		5GA-S40
C111	.04 50V				GP140		5GA-S40
C112	150 NPO 50V		DTZ-150		CN0315		10TCC-T15
C113	47 50V		DTZ-47	NP047	CN0447		10TCC-Q47
C114	.04 50V				GP140		5GA-S40
C115	.01 50V		DC-103	MGP01	TA110	QC2-141	TG-S10
C116	15 50V		DTZ-15	NP015	CN0415		10TCC-Q15
C117	100 NPO 50V		DTZ-100	NP0100	CN0310		10TCC-T10
C118	5 50V		DTZ-4R7	NP04P7	CN0547		10TCC-V47
C119	150 NPO 50V		DTZ-150		CN0315		10TCC-T15
C120	5 50V		DTZ-4R7	NP04P7	CN0547		10TCC-V47
C121	100 NPO 50V		DTZ-100	NP0100	CN0310		10TCC-T10
C122	.01 50V		DC-103	MGP01	TA110	QC2-141	TG-S10
C123	220 50V		DD-221		GP322		10TS-T22
C125	5-25	1040-145					
C126	470 50V		DD-471	GP470	GP347		10TS-T47
C127	.01 50V		DC-103	MGP01	TA110	QC2-141	TG-S10
C128	.01 50V			WMF1S1	EWF1A110	QF1-91	1PB-S10
C129	300 50V		DD-301	GP300	GP330		10TS-T30
C131	.04 50V				GP140		5GA-S40
C132	.04 50V				GP140		5GA-S40
C133	.04 50V				GP140		5GA-S40
C134	39 NPO 50V				CN0439		10TCC-Q39
C135	.04 50V				GP140		5GA-S40
C136	.04 50V				GP140		5GA-S40
C137	.04 50V				GP140		5GA-S40
C139	47 50V		DTZ-47	NP047	CN0447		10TCC-Q47
C140	.001 50V			DPMS6D1	EWF1A210	QF1-1	1PB-D10
C141	2 50V		DTZ-2R2	NP02P2	CN0522		10TCC-V22
C142	.04 50V				GP140		5GA-S40
C143	.04 50V				GP140		5GA-S40
C145	.1 50V		DC-104	MGP1	TA010	QC2-233	TG-P10
C146	.04 50V				GP140		5GA-S40
C147	100 50V		DD-101	GP100	GP310		10TS-T10
C148	.04 50V				GP140		5GA-S40
C149	.1 50V			DPMS2P1	EWF1A010	QF1-215	1PB-P10
C150	.005 50V		DC-502	MGP005	TA250	QC2-123	TG-D50
C151	.01 50V		DC-103	MGP01	TA110	QC2-141	TG-S10
C153	.005 50V		DC-502	MGP005	TA250	QC2-123	TG-D50
C158	.001 50V		DD-102G	GP1000	GP210	QC2-81	5GA-D10
C163	.01 50V		DC-103	MGP01	TA110	QC2-141	TG-S10
C164	.01 50V		DC-103	MGP01	TA110	QC2-141	TG-S10
C200	.001 50V		DD-102G	GP1000	GP210	QC2-81	5GA-D10
C201	.001 50V		DD-102G	GP1000	GP210	QC2-81	5GA-D10
C202	.001 50V		DD-102G	GP1000	GP210	QC2-81	5GA-D10
C203	.001 50V		DD-102G	GP1000	GP210	QC2-81	5GA-D10
C204	.001 50V		DD-102G	GP1000	GP210	QC2-81	5GA-D10
C205	.001 50V		DD-102G	GP1000	GP210	QC2-81	5GA-D10
C206	.001 50V		DD-102G	GP1000	GP210	QC2-81	5GA-D10
C207	.001 50V		DD-102G	GP1000	GP210	QC2-81	5GA-D10
C301	470 50V		DD-471	GP470	GP347		10TS-T47
C302	.04 50V				GP140		5GA-S40
C303	10 50V		DTZ-10	NP010	CN0410		10TCC-Q10
C304	.01 50V		DC-103	MGP01	TA110	QC2-141	TG-S10
C305	.04 50V				GP140		5GA-S40

CONTROLS (All wattages 1/2 watt, or less, unless listed)

ITEM No.	FUNCTION	RESIST-ANCE	REPLACEMENT DATA				
			MFGR. PART No.	CENTRALAB PART No.	CLAROSTAT PART No.	MALLORY PART No.	TRW PART No.
VR1	AGC	30K	1079-19	T-25K (2)	C-253 (2)	MTC253L1 (2)	X201R253B (2)
VR2	Squelch	50K	1080-31				
VR3	Squelch Range	50K	1080-32	T-25K (2)	C-253 (2)	MTC253L1 (2)	X201R253B (2)
VR4	Volume/Switch	10K	1080-29				
VR5	Bias	20K	1042-97	T-20K (2)	C-253 (2)	MTC24L1 (2)	X201R253B (2)
VR6	TX Power Meter	20K	1042-97	T-20K (2)	C-253 (2)	MTC24L1 (2)	X201R253B (2)
VR7	RX Signal Meter	20K	1042-97	T-20K (2)	C-253 (2)	MTC24L1 (2)	X201R253B (2)
VR8	RF Gain	10K	2049-26				
VR9	AMC	500	1042-99	T-500 (2)	C-501 (2)	MTC52L1 (2)	X201R501B (2)

PARTS LIST AND DESCRIPTION (CONTINUED)

(When ordering parts, state Model, Part Number, and Description.)

COILS (RF-IF)

ITEM No.	FUNCTION	REPLACEMENT DATA			REMARKS
		PART No.	OTHER IDENTIFICATION	MILLER PART No.	
L2	IF (10.695MHz)	1080-13		CCS135-TC	
L3	RF Choke (470uH)	1079-08		9250-474	
L4	RF Choke (100uH)	1079-09		9250-104	
L5	RF Choke (1.2uH)	2049-08			
L6	RF Choke (2.2uH)	1080-27		70F226A1	
L7	RF Choke (1mH)	1080-134			
L8	RF Choke	1043-26			
L9	Final (27MHz)	1045-24		CB305	
L10	RF Choke	1080-22		4588	
L12	RF Choke	1080-26		4590	
L13	RF Choke (2.2uH)	1080-27		70F226A1	
L14	RF Choke (1mH)	1080-134			
L15	RF Choke (1.2uH)	2049-08			
L16	RF Choke	1080-26		4590	
L19	TVI Trap (81MHz)	2022-145			
L200	TVI Trap (2.2uH)	1080-27		70F226A1	
L201	TVI Trap (2.2uH)	1080-27		70F226A1	
L202	TVI Trap (2.2uH)	1080-27		70F226A1	
L203	TVI Trap (2.2uH)	1080-27		70F226A1	
L204	TVI Trap (2.2uH)	1080-27		70F226A1	
L205	TVI Trap (2.2uH)	1080-27		70F226A1	
T1	Rec Antenna (27MHz)	1080-11		CBS740-T	
T2	Rec RF (27MHz)	1080-12		CBS711-TC	
T3	IF (10.695MHz)	1080-14		CBS508-1TC	
T4	IF (455kHz)	1080-15		CBS507-4	
T5	IF (455kHz)	1080-16			
T6	IF (455kHz)	1080-16			
T7	IF (455kHz)	1080-17		8535	
T10	Down OSC (36.380MHz)	1043-22		CBS121	
T11	VCO	1043-22		CBS121	
T12	TVI Trap (54MHz)	1080-131			
T13	XMT Driver (27MHz)	1080-23		CB303	
T14	XMT Buffer (27MHz)	1080-24		CB306	
T15	XMT Mixer (27MHz)				
T16	XMT Mixer (27MHz)	1043-22		CBS121	
T17	XMT Mixer (27MHz)	1043-22		CBS121	

FILTER CHOKE

ITEM No.	RATINGS			REPLACEMENT DATA			NOTES
	CURRENT (Measured)	DC RES.	INDUCTANCE (0 CURRENT 1000~)	MFGR. PART No.	THORDARSON PART No.	TRIAD PART No.	
L17	1A	.114	.6mH	1080-28			

TRANSFORMER (Driver)

ITEM No.	TURNS RATIO			REPLACEMENT DATA			NOTES
	PRI.	SEC. 1	SEC. 2	MFGR. PART No.	THORDARSON PART No.	TRIAD PART No.	
T8	1	1		1080-137 GT-2202 (1)			(1) Number on unit.

TRANSFORMER (Audio Output)

ITEM No.	IMPEDANCE			REPLACEMENT DATA			NOTES
	PRI.	SEC.		MFGR. PART No.	THORDARSON PART No.	TRIAD PART No.	
T9	32	1 8	2 18	1080-138 TF-038 (1)	TR754	MCB-8	(1) Number on unit.

PARTS LIST AND DESCRIPTION (CONTINUED)

(When ordering parts, state Model, Part Number, and Description.)

SPEAKER

ITEM No.	TYPE	REPLACEMENT DATA		NOTES
		MFGR. PART No.	QUAM PART No.	
SP	3" PM 16 Ohms	1080-150	30C25Z16	

FUSE DEVICES

ITEM No.	DESCRIPTION	REPLACEMENT DATA						
		PART No.		BUSS PART No.		LITTELFUSE PART No.		WORKMAN PART No.
		DEVICE	HOLDER	DEVICE	HOLDER	DEVICE	HOLDER	DEVICE
F2	1 1/2 A	1080-67	1043-133	AGC1 1/2	HDJ	31201.5	150145	FG1 1/2-2

MICROPHONE

ITEM No.	REPLACEMENT DATA				CONNECTION DATA						
	MFGR. PART No.	GC PART No.	GC NOISE CANCEL	GC POWER	GC CONNECTOR	GC Red	GC Shield	GC Yellow	GC Blue	GC White	GC Black
MIC	2049-48	18-032	18-034	18-010	18-092	2	4	3	1	NC	4

MISCELLANEOUS

ITEM No.	PART NAME	PART No.	NOTES
CF1	Ceramic Filter	1079-12	455kHz
J1	Jack	1079-48	Antenna
J2	Jack	1079-110	External Speaker
J3	Jack	1079-110	PA
J4	Jack	2017-25	Microphone
LED	LED	2049-28	TX Indicator (17mA @ 2.19V)
M1	Meter	2041-10	S/RF
PL1	Lamp	1079-54	Channel (47mA @ 13.23V)
PL2	Lamp	1079-119	Meter (47mA @ 13.23V)
S1	Switch		Power (Part of Volume Control)
S2	Switch	2049-02	Channel Selector
S3	Switch	1080-136	CB/PA
S4	Switch	1080-136	ANL
Y1	Crystal	2049-05	10.240MHz
Y2	Crystal	2049-06	36.380MHz
Y3	Crystal	2049-07	10.695MHz

CABINETS & CABINET PARTS (When ordering specify model, chassis & color)

ITEM	PART No.
Knob, Channel Selector	2049-52
Knob, Volume/Squelch/RF Gain	1080-145

ITEM	PART No.
Microphone Hanger	1042-298
Mounting Bracket	1080-84