SAMS

PHOTOFACT®

CB RADIO SERIES

CB-179

179

MARCH 1978

CONTENTS

HOWARD W. SAMS & CO., INC. Indianapolis, Indiana

For Supplier Address See PHOTOFACT Index

NOTE

Repair or adjustment of transmitter circuits must be under supervision of a person with first-or second-class radiotelephone license.
(Refer to FCC Rules and Regulations Part 95, Subpart C & D.)

The frequency of the transmitter should be checked periodically with a secondary frequency standard to insure proper and legal operation.

Best results will be obtained when adjusting the final RF output circuit if the antenna normally used is connected and the chassis is as nearly in the cabinet as possible.

Connect either 50-ohm dummy load or the normally used antenna system.

MODEL 132XLR

MANUFACTURER'S SPECIFICATIONS

GENERAL

Channels	40 AM, 40 LSB, 40 USB.
Frequency Range	26.965 to 27.405 MHz.
Frequency Control	Phase Lock Loop (PLL) synthesizer.
Frequency Tolerance	0.005%.
Frequency Stability	0.001%.
Operating Temperature Range	-30°C to +50°C.
Microphone	Plug-in dynamic; with push-to-talk switch and coiled cord.
Input Voltage	13.8 VDC nominal, 15.9V max., 11.7V min. (positive or negative ground).
Current Drain	*Transmit:* AM full mode., 3A; SSB, 12 watts PEP output, 2.5A. *Receive:* Squelched, 0.5A; maximum audio output, 1.5A.

TRANSMITTER

Power Output	AM, 4 watts. SSB, 12 watts, PEP.
Modulation	AM, high-and low-level Class B.
Intermodulation Distortion	SSB: 3rd order, more than -25 dB. 5th order, more than -35 dB.
SSB Carrier Suppression	More than -40 dB.
Unwanted Sideband	More than -40 dB.
Frequency Response	AM and SSB: 350 to 2500 Hz.
Output Impedance	50 ohms, unbalanced.
SSB Filter	7.8 MHz, crystal lattice type: 6 dB @ 4.2 KHz. 60 dB @ 7.0 KHz.
Output Indicators	Meter shows relative RF output power; percent modulations and SWR. Transmit light glows when transmitter is in operation.

RECEIVER

Sensitivity	SSB: Less than .25 μV for 10 dB (S+N)/N at greater than ½-watt of audio output. AM: Less than .5 μV for 10 dB (S+N)/N at greater than ½-watt of audio output.
Selectivity	SSB and AM: 6 dB @ 3.8 KHz, 50 dB @ 10 KHz.
Cross Modulation	More than 55 dB.
Image Rejection	More than 50 dB.
IF Frequency	AM and SSB: 7.8 MHz.
Adjacent-Channel Rejection	Greater than -50 dB AM & SSB.
AM and SSB RF Gain Control	Adjustable for optimum signal reception.
Automatic Gain Control (AGC)	Less than 12 dB change in audio output for inputs from 10 to 500,000 microvolts.
Squelch	Adjustable; threshold less than .5 μV.
Noise Blanker	RF type, effective on AM and SSB.
Voice Lock Range	AM, ±1.5 KHz; SSB, ±1 KHz.
Audio Output Power	4 watts into 8 ohms.
Frequency Response	350 to 2500 Hz.
Distortion	Less than 10% at 4 watts output.
Built-in Speaker	8 ohms, round.
External Speaker (Not Supplied)	8 ohms; disables internal speaker when connected.

PA SYSTEM

Power Output	4 watts into external speaker.
External Speaker for PA (Not Supplied)	8 ohms.

Courtesy of the Manufacturer

HOWARD W. SAMS & CO., INC. Indianapolis, Indiana 46206

ALIGNMENT INSTRUCTIONS

CAUTION: Use isolation transformer or observe polarity when connecting test equipment.
Maintain line voltage at 120V AC. Allow a 15-minute warm-up period.
~~Adjustments made with 9-volt DC input.~~
Adjustments made with 12-volt DC input.
Adjustments made with 13.8-volt DC input.
Connect low sides of test equipment to ground unless specified otherwise.
Connect 50-ohm dummy load or antenna before keying transmitter.

Suggested Alignment Tools:	GC Electronics:
L5, L7, L301, L302, L303, T1, T2, T3, T9 thru T12, T303.	9440
L304, T4 thru T8, T301, T302.....	5009, 8728-A, 8728
L3.....	9091, 8728-A, 8728
C56, C82.....	5000, 8276

SYNTHESIZER ALIGNMENT

TEST EQUIPMENT	TRANSCEIVER	ADJUST	REMARKS
Input of frequency counter to TP314. (IC302 pin 3).	Ch. 19, AM		Check for 5.120MHz.
Input of frequency counter to TP315. (Q304, emitter).	Ch. 19, AM Voice Lock Midrange	L303	Adjust for 17.0555MHz.
Input of frequency counter to TP311	Ch. 19, USB Voice Lock Midrange	R324	Adjust for 34.9875MHz.
Input of frequency counter to TP311	Ch. 19, USB Voice Lock +	R322	Adjust for 34.9885MHz.
	Ch. 19, USB Voice Lock Midrange	R324	Readjust for 34.9875MHz. Readjust R322 and R324 for a range of +1kHz while maintaining 34.9875MHz. with clarifier at midrange.
	Ch. 1, USB Voice Lock Midrange		Check for 34.7675MHz. Check all channels. (See Truth Chart for correct frequencies).
Input of frequency counter to TP311.	Ch. 19, AM Voice Lock Midrange	R328	Adjust for 34.985MHz.
	Ch. 1, AM Voice Lock Midrange		Check for 34.765MHz. Check all channels. (See Truth Chart for correct frequencies).
	Ch. 1, LSB Voice Lock Midrange		Check for 19.1625MHz. Check all channels. (See Truth Chart for correct frequencies).
Input of frequency counter and oscilloscope to TP311.	Ch. 19, AM Voice Lock Midrange	L302	Adjust for maximum at 34.985MHz.
	Ch. 19, LSB Voice Lock Midrange	L301	Adjust for maximum at 19.3825MHz.
Input of frequency counter to TP4.	Ch. 19, USB	C82	Adjust for 7.8025MHz.
Input of frequency counter and oscilloscope to TP308.	Ch. 19, LSB	T301,T302 T303	Adjust for maximum at 18.507MHz.
Input of oscilloscope to TP317.	Ch. 19, AM	L304	Adjust for MINIMUM squaring.
Input of frequency counter to TP309.	Ch. 1, AM		Check for 655kHz. Check all channels. (See Truth Chart for correct frequency).

RECEIVER ALIGNMENT

Connect an AC VTVM or AF wattmeter across speaker voice coil.
Adjust volume control to obtain a suitable indication.
Set generator output low enough to prevent AGC limiting.

AM

TEST EQUIPMENT	TRANSCEIVER	ADJUST	REMARKS
Output of signal generator thru .01uF to TP318. 7.8MHz,1000Hz @ 30% modulation.	Ch. 19 AM Voice Lock at midrange RF at maximum NB/ANL Off	T6,T5,T4	Adjust for maximum output.
Output of signal generator thru .01uF to antenna jack. 27.185MHz,1000Hz @ 30% modulation.	Ch. 19 AM Voice Lock at midrange RF at maximum NB/ANL Off	T1,T2,T3	Adjust for maximum output.

RECEIVER ALIGNMENT

Connect an AC VTVM or AF wattmeter across speaker voice coil.
Adjust volume control to obtain a suitable indication.
Set generator output low enough to prevent AGC limiting.

SSB

TEST EQUIPMENT	TRANSCEIVER	ADJUST	REMARKS
Output of signal generator thru .01uF to TP318. 7.8015MHz unmodulated.	Ch. 19 USB Voice Lock at midrange RF at maximum NB/ANL Off	T5,T4	Adjust for maximum output.

RECEIVER ADJUSTMENTS

Connect an AC VTVM or AF wattmeter across speaker voice coil.
Adjust volume control to obtain a suitable indication.

TEST EQUIPMENT	TRANSCEIVER	ADJUST	REMARKS
Output of signal generator thru .01uF to antenna jack. 27.185MHz,1000Hz @ 30% modulation. Output 1000uV.	Ch. 19 AM Voice Lock at midrange RF at maximum NB/ANL Off	R49	SQUELCH RANGE Set Squelch Control R51 fully clockwise. Adjust R49 so that squelch just breaks.
Output of signal generator thru .01uF to antenna jack. 27.185MHz,1000Hz @ 30% modulation. Output 100uV.	Ch. 19 AM Voice Lock at midrange RF at maximum NB/ANL Off	R10	S METER Adjust R10 for 9 on S scale of meter.
Output of signal generator thru .01uF to antenna jack. 27.185MHz,1000Hz @ 30% modulation. Output 1uV. Input of oscilloscope to speaker voice coil.	Ch. 19 AM Voice Lock at midrange RF at maximum NB/ANL Off	R12	RF GAIN Adjust R12 for best signal to noise ratio.

TRANSMITTER ALIGNMENT

Connect an RF wattmeter and 50-ohm, 25-watt dummy load to antenna connector.
NOTE: Be sure to check transmitter frequency and power on all active channels after alignment of transmitter.
See page 4 for channel frequencies.

AM

TEST EQUIPMENT	TRANSCEIVER	ADJUST	REMARKS
	Ch. 19 AM	T8,T9,T10, T11,T12,L5, L7	Adjust for maximum.
	Ch. 19 AM	L3	Adjust for 4 watt maximum.
Input of frequency counter to antenna jack.	Ch. 1 AM	R317	Adjust R317 for 26.965MHz.

TRANSMITTER ALIGNMENT

Connect an RF wattmeter and 50-ohm, 25-watt dummy load to antenna connector.
NOTE: Be sure to check transmit frequency and power on all active channels after alignment of transmitter.
See page 4 for channel frequencies.

SSB

TEST EQUIPMENT	TRANSCEIVER	ADJUST	REMARKS
Inject a 1000Hz,100mV signal at MIC input.	Ch. 19 USB	T7	Adjust for maximum RF output.

TRANSMITTER ADJUSTMENTS

Connect an RF wattmeter and 50-ohm, 25-watt dummy load to antenna connector.
NOTE: Be sure to check transmitter frequency and power on all active channels after adjustment of transmitter.
See page 4 for channel frequencies.

TEST EQUIPMENT	TRANSCEIVER	ADJUST	REMARKS
Input of oscilloscope to antenna jack. No signal input.	Ch. 19 USB	R72,C56	CARRIER BALANCE Adjust for MINIMUM RF output.
Inject a 1000Hz, 100mV signal at MIC input.	Ch. 19 AM	R134	AM ALC Adjust for 100% modulation maximum.
Inject a 1000Hz, 100mV signal at MIC input.	Ch. 19 USB	R36,R89	SSB BIAS" Adjust for maximum.
	Ch. 19 AM MOD/RF RF	R9	RF PANEL METER Adjust R9 so that RF panel meter agrees with RF wattmeter.
Inject a 1000Hz, 100mV signal at MIC input.	Ch. 19 USB	R130	SSB ALC Adjust for R130 for 12 watts maximum.
Input of modulation meter or oscilloscope to antenna jack. Inject a 1000Hz signal at MIC input.	Ch. 19 AM MOD/RF MOD	R93	MOD METER Adjust R93 so that MOD panel meter agrees with external modulation meter.

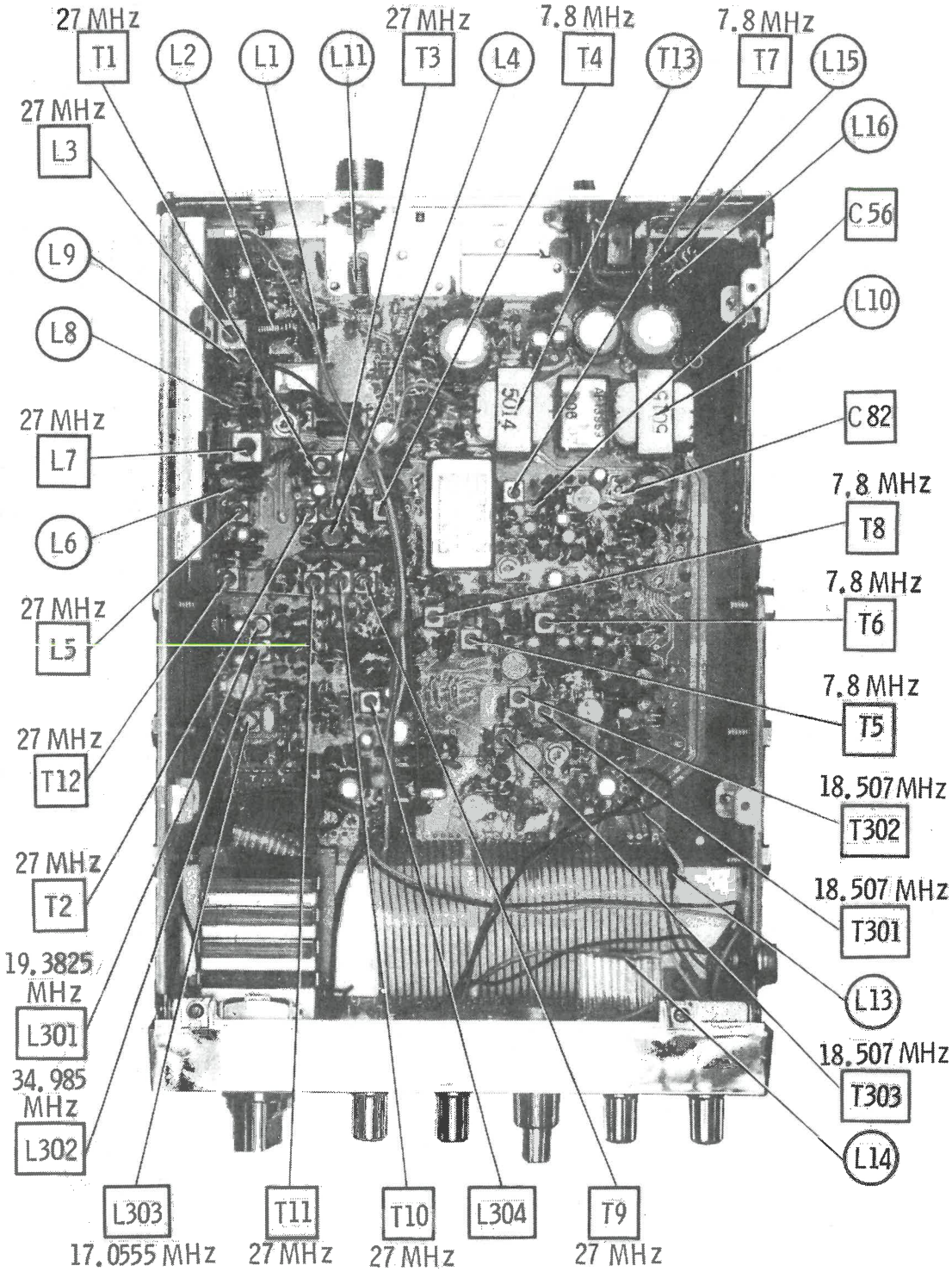

CHASSIS - BOTTOM

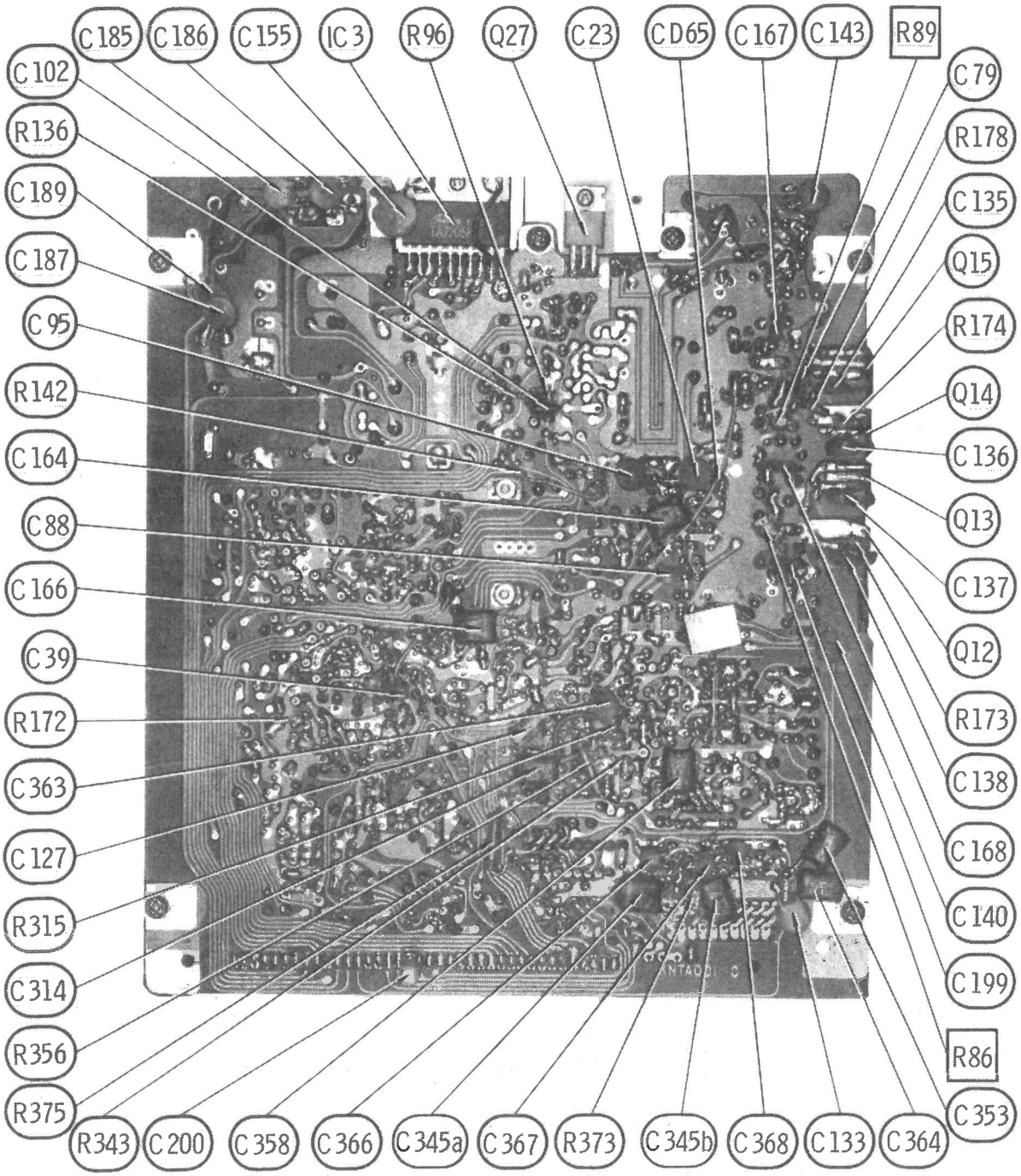
C185
C186
C155
IC3
R96
Q27
C23
CD65
C167
C143
R89
C102
R136
C189
C187
C95
R142
C164
C88
C166
C39
R172
C363
C127
R315
C314
R356
R375
R343
C200
C358
C366
C345a
C367
R373
C345b
C368
C133
C364
C353
R86
C199
C140
C168
C138
R173
C137
Q12
Q13
C136
Q14
R174
Q15
C135
R178
C79

MAIN BOARD

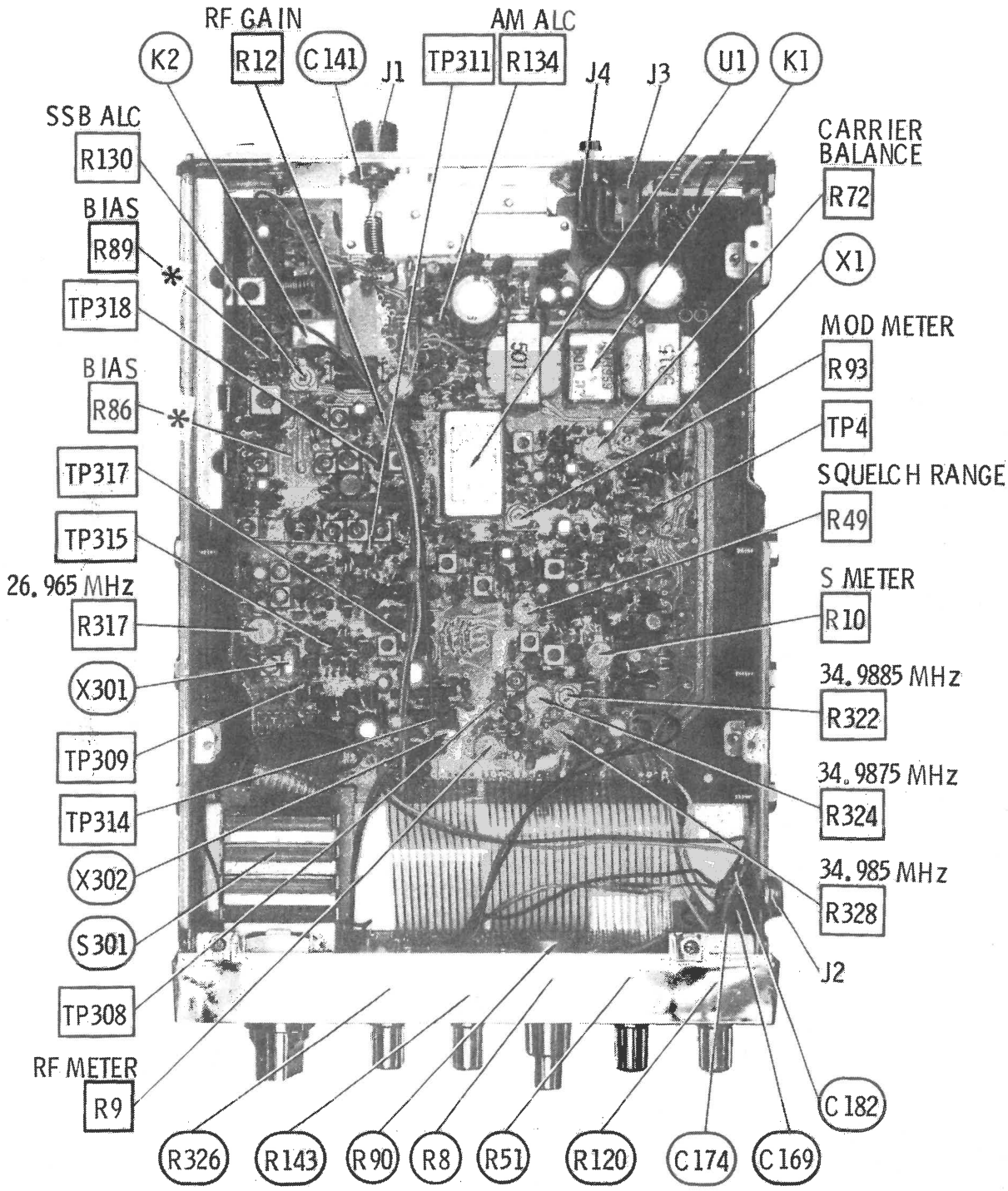

*On bottom of board

CHASSIS - BOTTOM

TRUTH CHART

1 = 6.92 Volts 0 = 0 Volts

CHANNEL	IC 304 PROGRAM DIVIDER PINS 8	7	6	5	4	3	2	AM REC & XMT VCO OUTPUT IN MHz AT TP311	USB REC & XMT VCO OUTPUT IN MHz AT TP311	LSB REC & XMT VCO OUTPUT IN MHz AT TP311	AM(REC&XMT) LSB (REC & XMT) USB (REC & XMT) VCM OUTPUT IN MHz AT TP309
1	1	0	0	0	0	0	1	34.765	34.7675	19.1625	.655
2	1	0	0	0	0	1	0	34.775	34.7775	19.1725	.665
3	1	0	0	0	0	1	1	34.785	34.7875	19.1825	.675
4	1	0	0	0	1	0	1	34.805	34.8075	19.2025	.695
5	1	0	0	0	1	1	0	34.815	34.8175	19.2125	.705
6	1	0	0	0	1	1	1	34.825	34.8275	19.2225	.715
7	1	0	0	1	0	0	0	34.835	34.8375	19.2325	.725
8	1	0	0	1	0	1	0	34.855	34.8575	19.2525	.745
9	1	0	0	1	0	1	1	34.865	34.8675	19.2625	.755
10	1	0	0	1	1	0	0	34.875	34.8775	19.2725	.765
11	1	0	0	1	1	0	1	34.885	34.8875	19.2825	.775
12	1	0	0	1	1	1	1	34.905	34.9075	19.3025	.795
13	1	0	1	0	0	0	0	34.915	34.9175	19.3125	.805
14	1	0	1	0	0	0	1	34.925	34.9275	19.3225	.815
15	1	0	1	0	0	1	0	34.935	34.9375	19.3325	.825
16	1	0	1	0	1	0	0	34.955	34.9575	19.3525	.845
17	1	0	1	0	1	0	1	34.965	34.9675	19.3625	.855
18	1	0	1	0	1	1	0	34.975	34.9775	19.3725	.865
19	1	0	1	0	1	1	1	34.985	34.9875	19.3825	.875
20	1	0	1	1	0	0	1	35.005	35.0075	19.4025	.895

TRUTH CHART

1 = 6.92 Volts 0 = 0 Volts

CHANNEL	IC 304 PROGRAM DIVIDER PINS 8	7	6	5	4	3	2	AM REC & XMT VCO OUTPUT IN MHz AT TP311	USB REC & XMT VCO OUTPUT IN MHz AT TP311	LSB REC & XMT VCO OUTPUT IN MHz AT TP311	AM(REC&XMT) LSB (REC & XMT) USB (REC & XMT) VCM OUTPUT IN MHz AT TP309
21	1	0	1	1	0	1	0	35.015	35.0175	19.4125	.905
22	1	0	1	1	0	1	1	35.025	35.0275	19.4225	.915
23	1	0	1	1	1	1	0	35.055	35.0575	19.4525	.945
24	1	0	1	1	1	0	0	35.035	35.0375	19.4325	.925
25	1	0	1	1	1	0	1	35.045	35.0475	19.4425	.935
26	1	0	1	1	1	1	1	35.065	35.0675	19.4625	.955
27	1	1	0	0	0	0	0	35.075	35.0775	19.4725	.965
28	1	1	0	0	0	0	1	35.085	35.0875	19.4825	.975
29	1	1	0	0	0	1	0	35.095	35.0975	19.4925	.985
30	1	1	0	0	0	1	1	35.105	35.1075	19.5025	.995
31	1	1	0	0	1	0	0	35.115	35.1175	19.5125	1.005
32	1	1	0	0	1	0	1	35.125	35.1275	19.5225	1.015
33	1	1	0	0	1	1	0	35.135	35.1375	19.5325	1.025
34	1	1	0	0	1	1	1	35.145	35.1475	19.5425	1.035
35	1	1	0	1	0	0	0	35.155	35.1575	19.5525	1.045
36	1	1	0	1	0	0	1	35.165	35.1675	19.5625	1.055
37	1	1	0	1	0	1	0	35.175	35.1775	19.5725	1.065
38	1	1	0	1	0	1	1	35.185	35.1875	19.5825	1.075
39	1	1	0	1	1	0	0	35.195	35.1975	19.5925	1.085
40	1	1	0	1	1	0	1	35.205	35.2075	19.6025	1.095

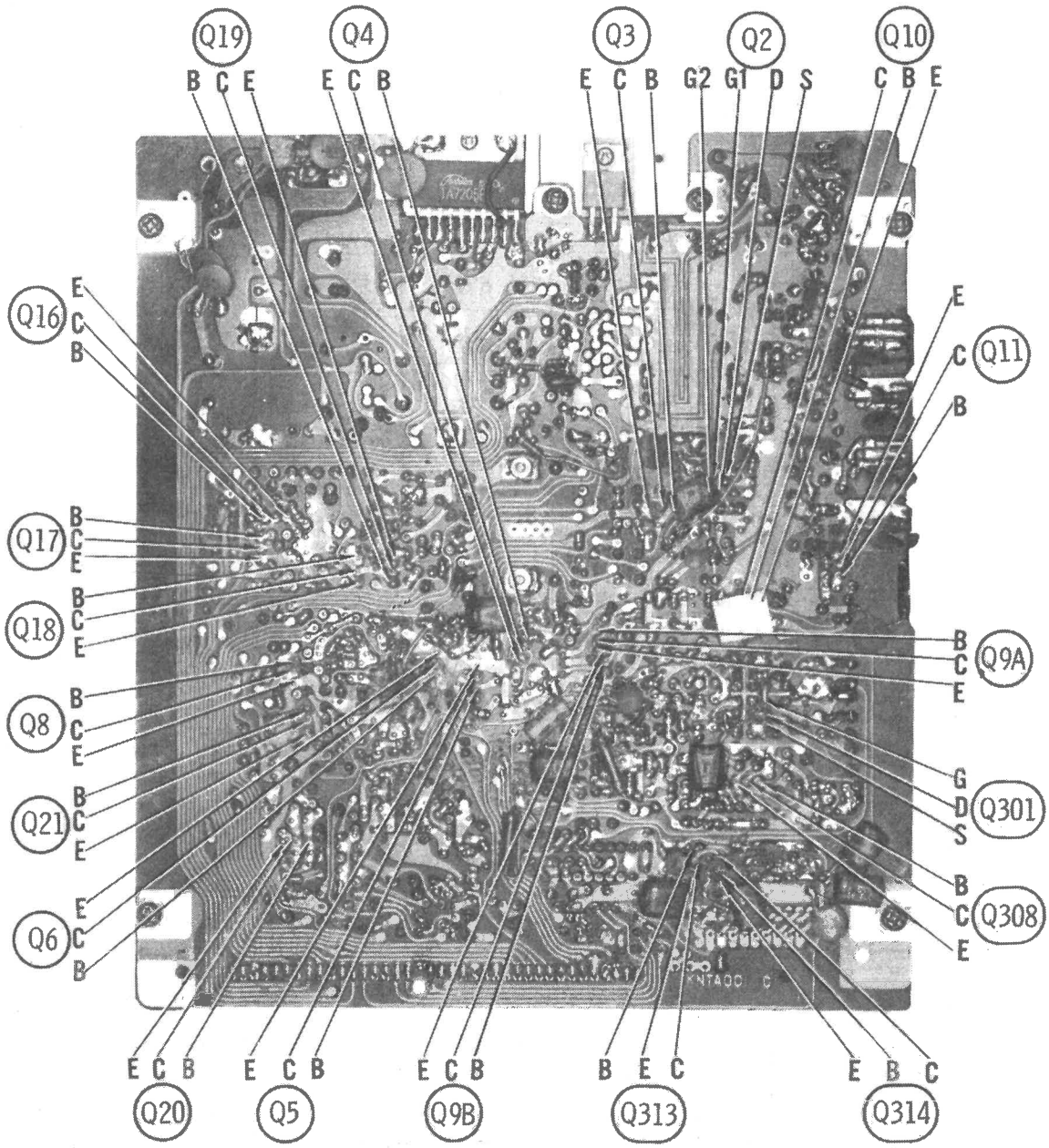
Q19
B C E
Q4
E C B
Q3
E C B
Q2
G2 G1 D S
Q10
C B E
Q16
E
C
B
Q11
E
C
B
Q17
B
C
E
Q18
B
C
E
Q9A
B
C
E
Q8
B
C
E
Q21
B
C
E
Q301
G
D
S
Q6
E
C
B
Q308
B
C
E
Q20
E C B
Q5
E C B
Q9B
E C B
Q313
B E C
Q314
E B C

MAIN BOARD

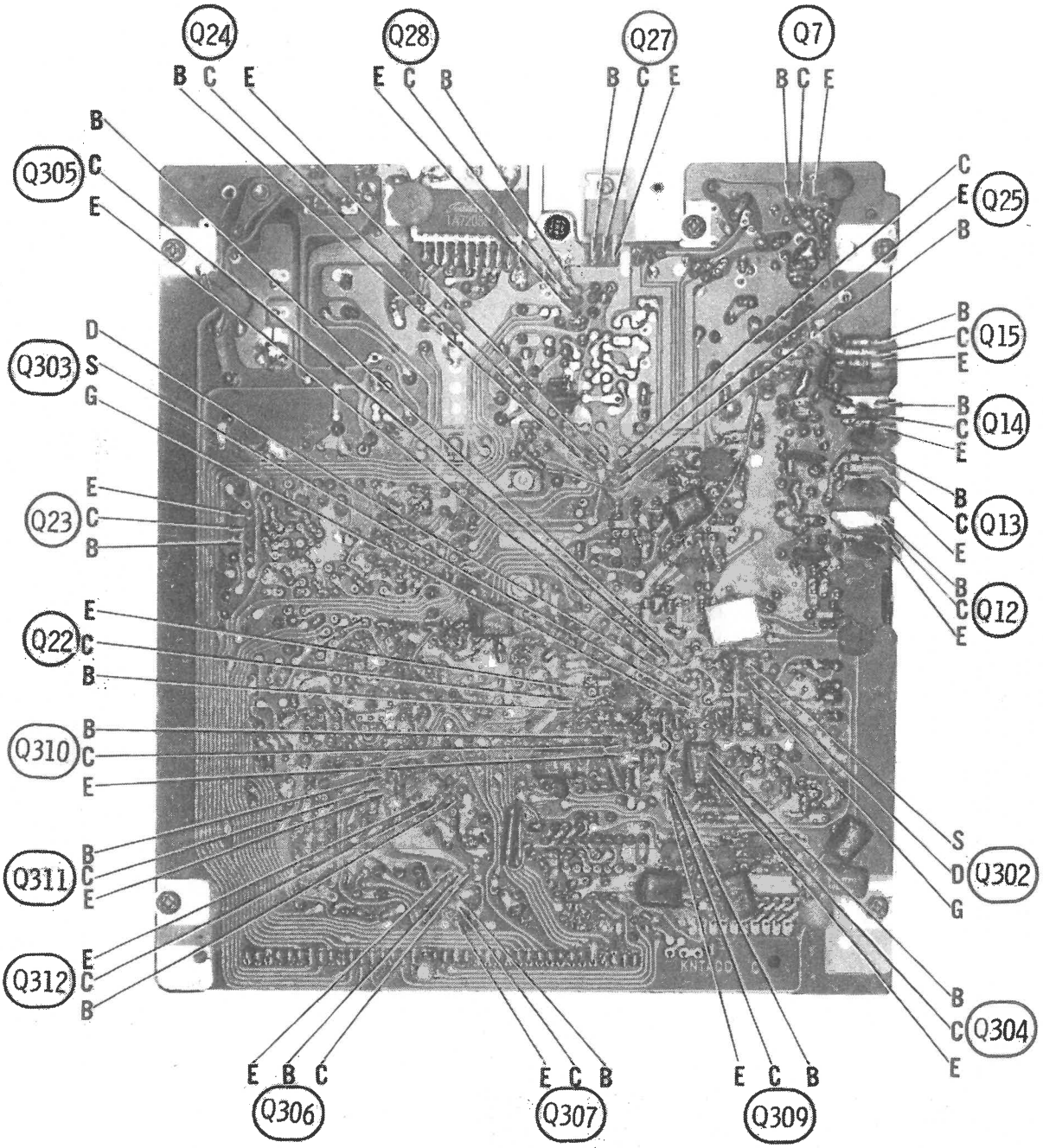
Q24
B C E
Q28
E C B
Q27
B C E
Q7
B C E
Q305
B C E
Q303
D S G
Q23
E C B
Q22
E C B
Q310
B C E
Q311
B C E
Q312
E C B
Q25
C E B
Q15
B C E
Q14
B C E
Q13
B C E
Q12
B C E
Q302
S D G
Q304
B C E
Q306
E B C
Q307
E C B
Q309
E C B

MAIN BOARD

A Howard W. Sams CIRCUITRACE® Photo

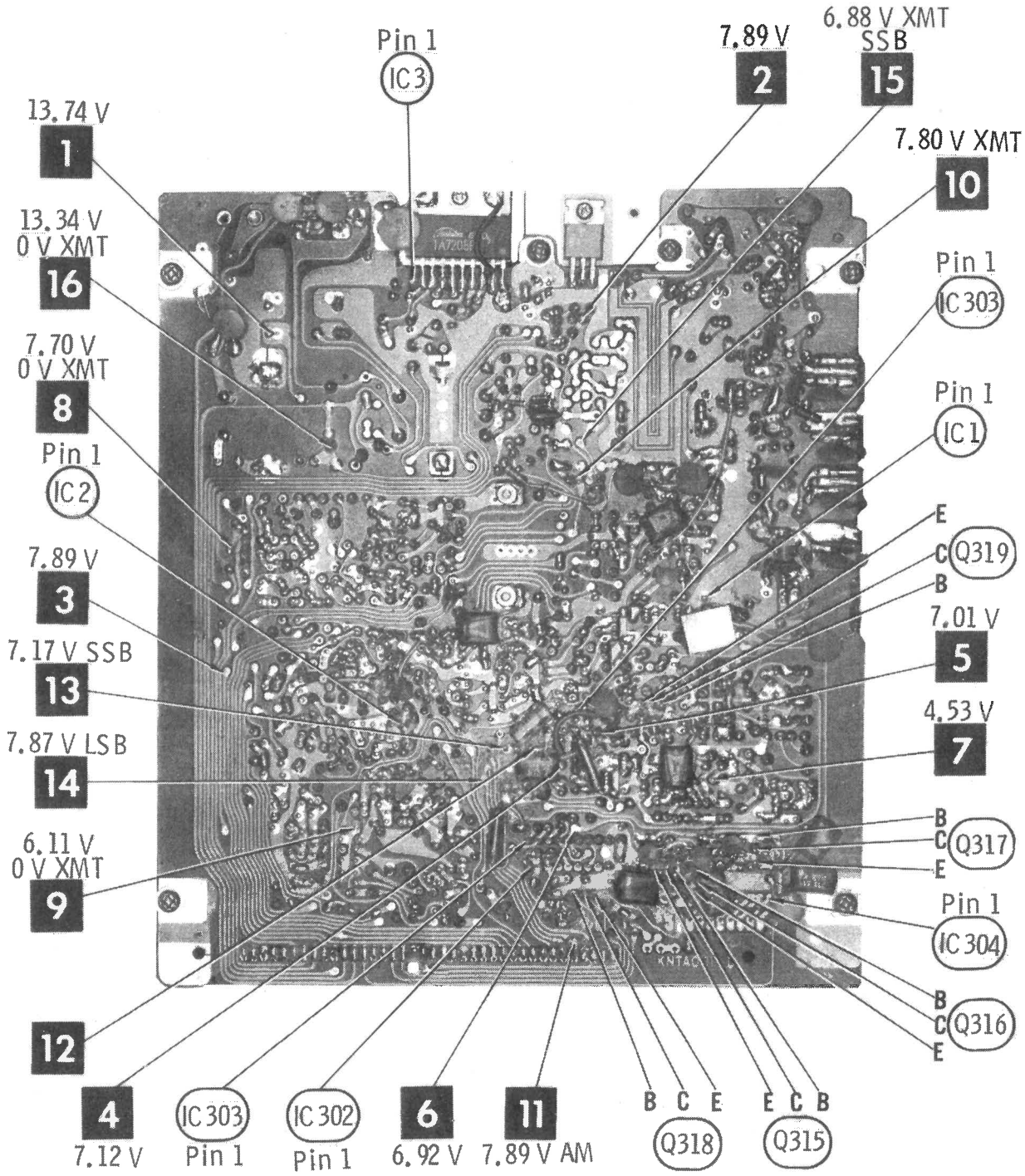

MAIN BOARD

A Howard W. Sams CIRCUITRACE® Photo

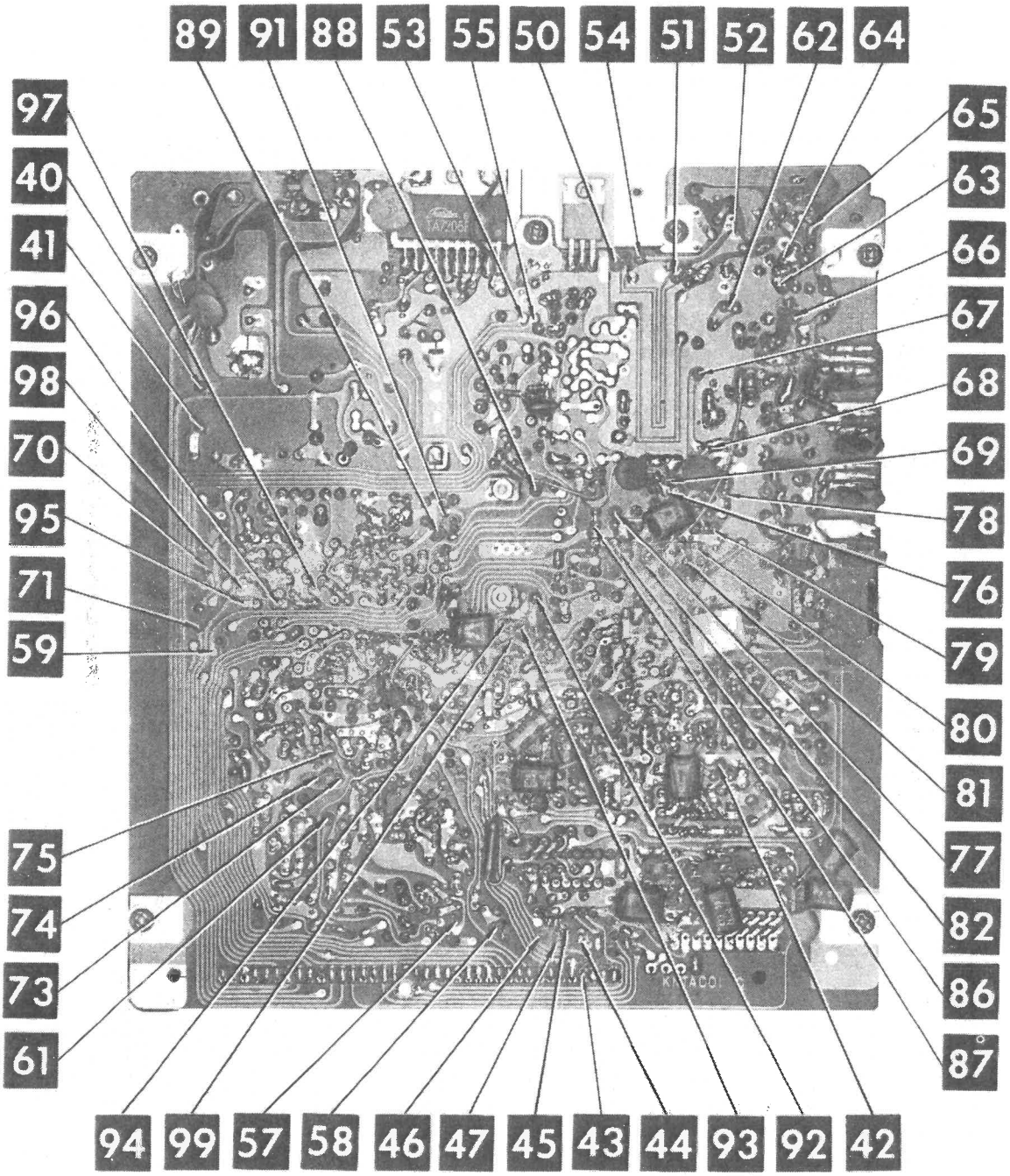

MAIN BOARD

A Howard W. Sams CIRCUITRACE® Photo

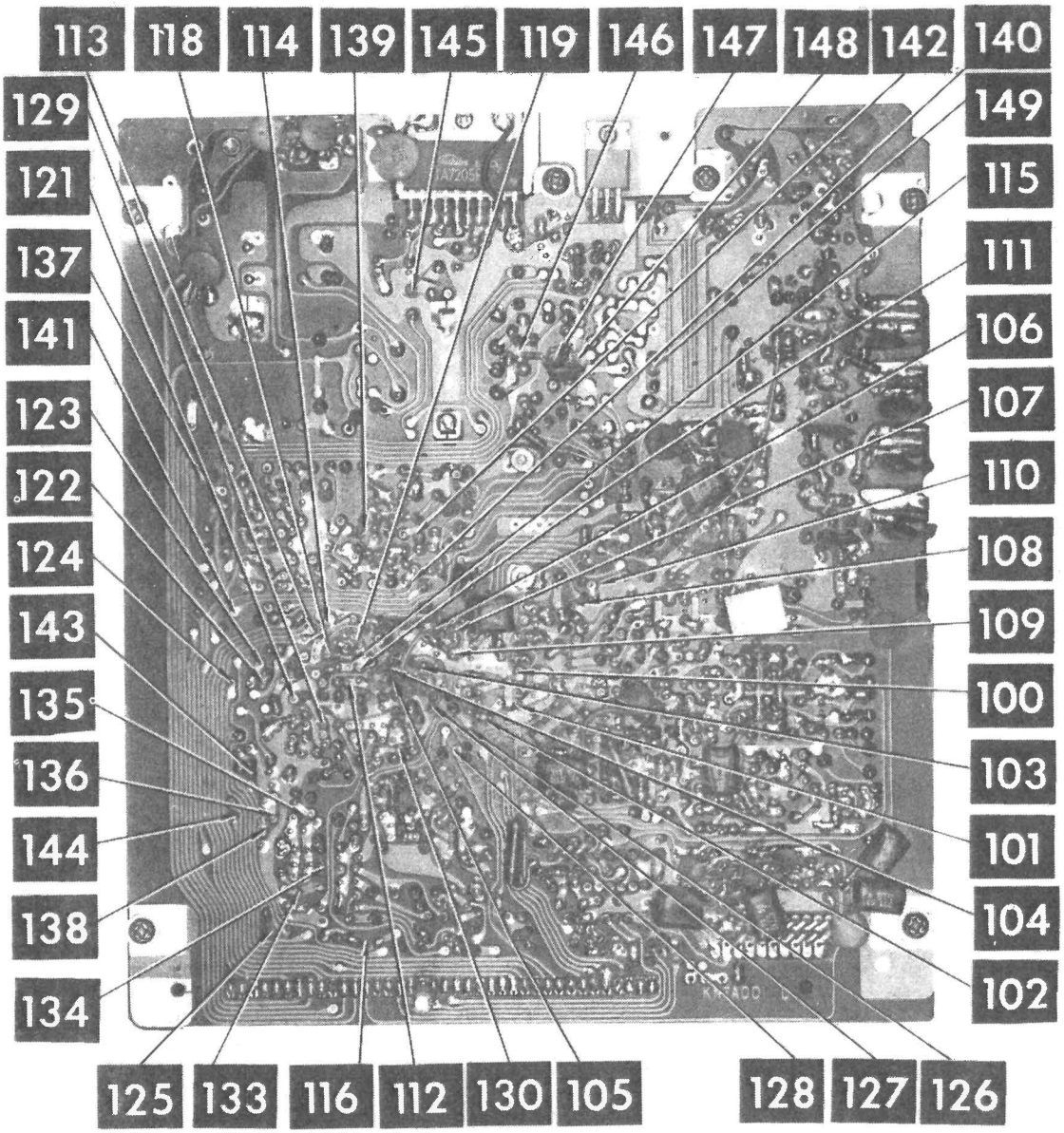

MAIN BOARD

A Howard W. Sams CIRCUITRACE® Photo

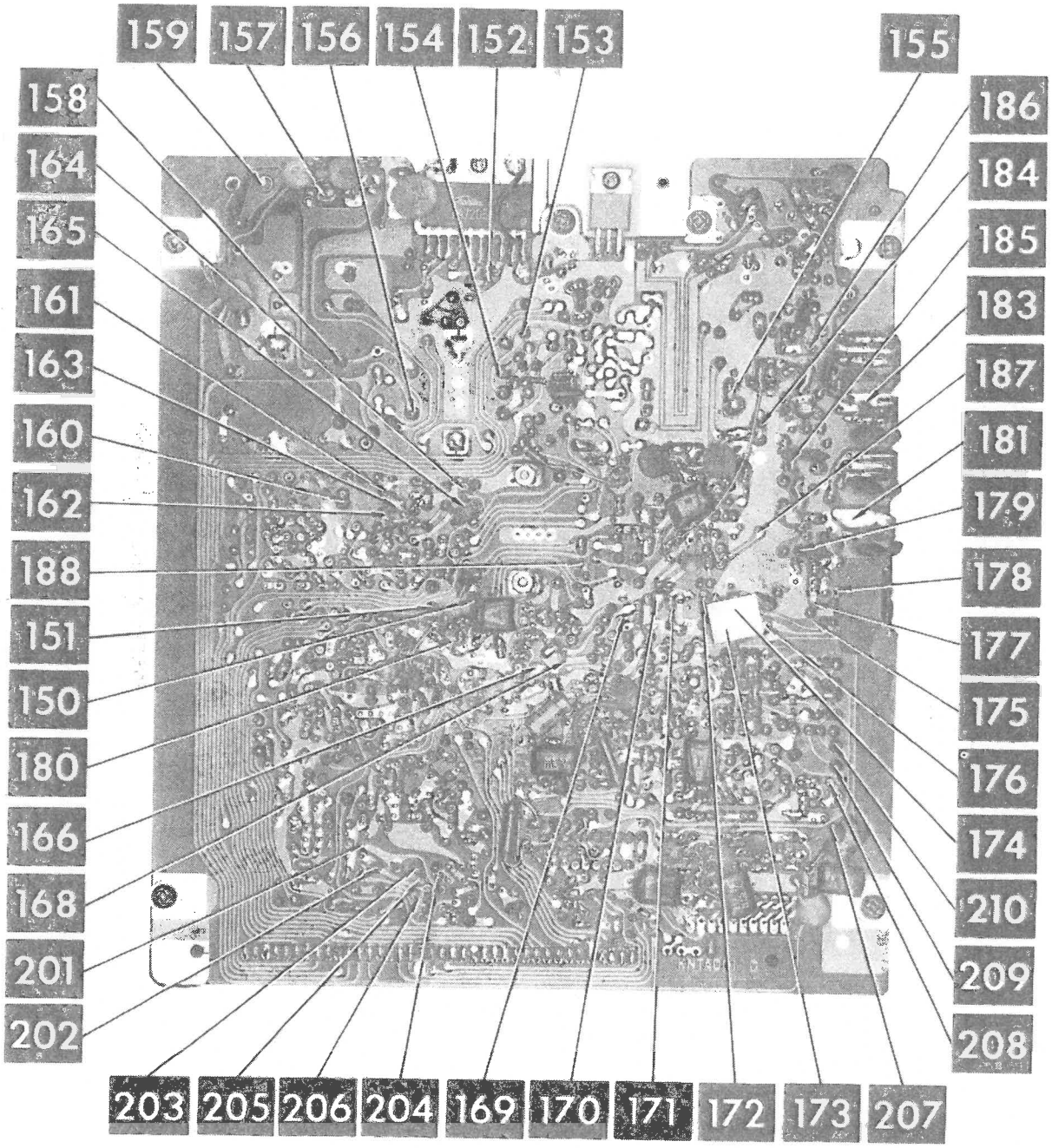

COBRA MODEL 132XLR

MAIN BOARD

A Howard W. Sams CIRCUITRACE® Photo

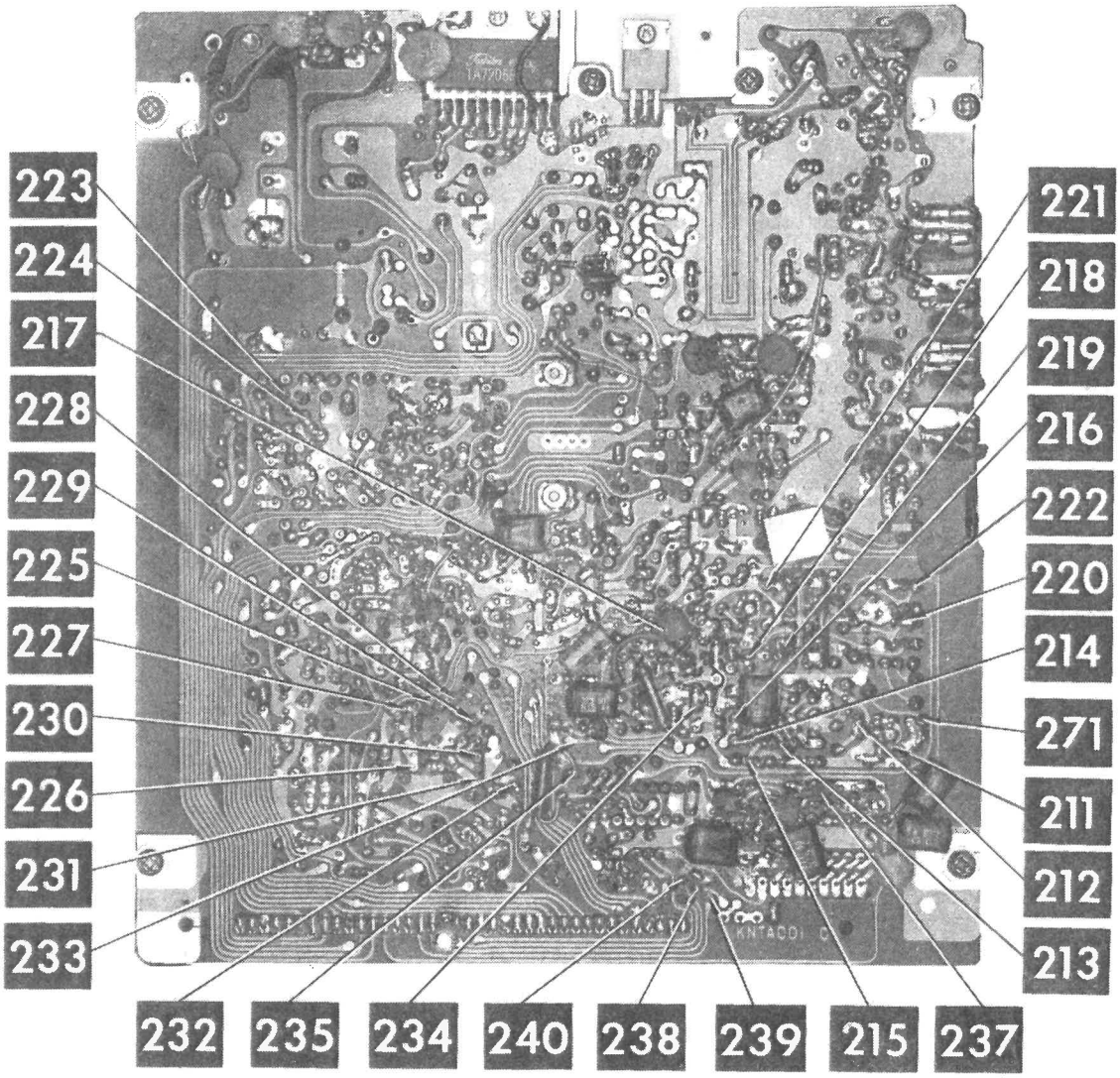

MAIN BOARD

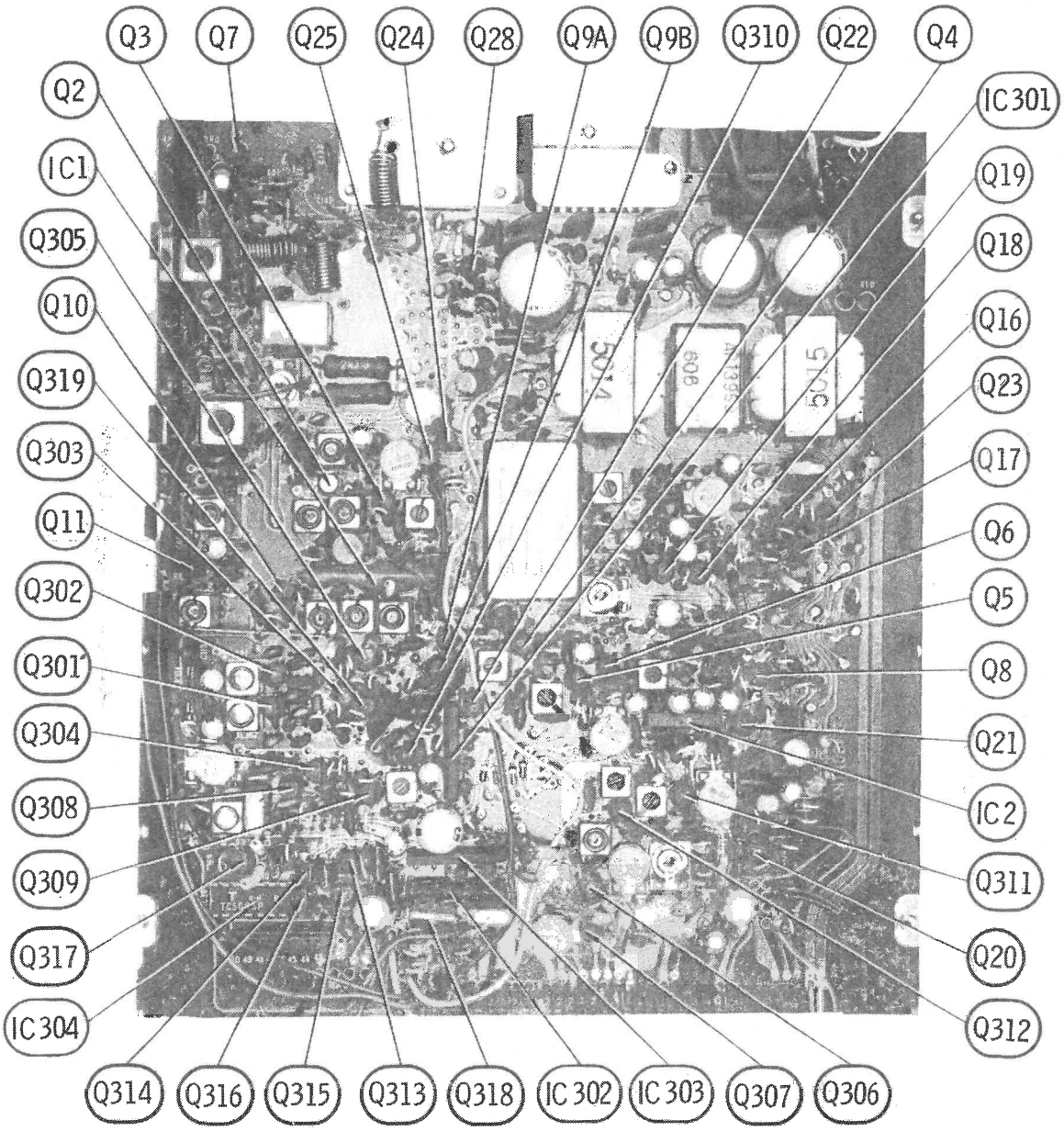
Q3
Q7
Q25
Q24
Q28
Q9A
Q9B
Q310
Q22
Q4
Q2
IC301
IC1
Q19
Q305
Q18
Q10
Q16
Q319
Q23
Q303
Q17
Q11
Q6
Q302
Q5
Q301
Q8
Q304
Q21
Q308
IC2
Q309
Q311
Q317
Q20
IC304
Q312
Q314
Q316
Q315
Q313
Q318
IC302
IC303
Q307
Q306

MAIN BOARD

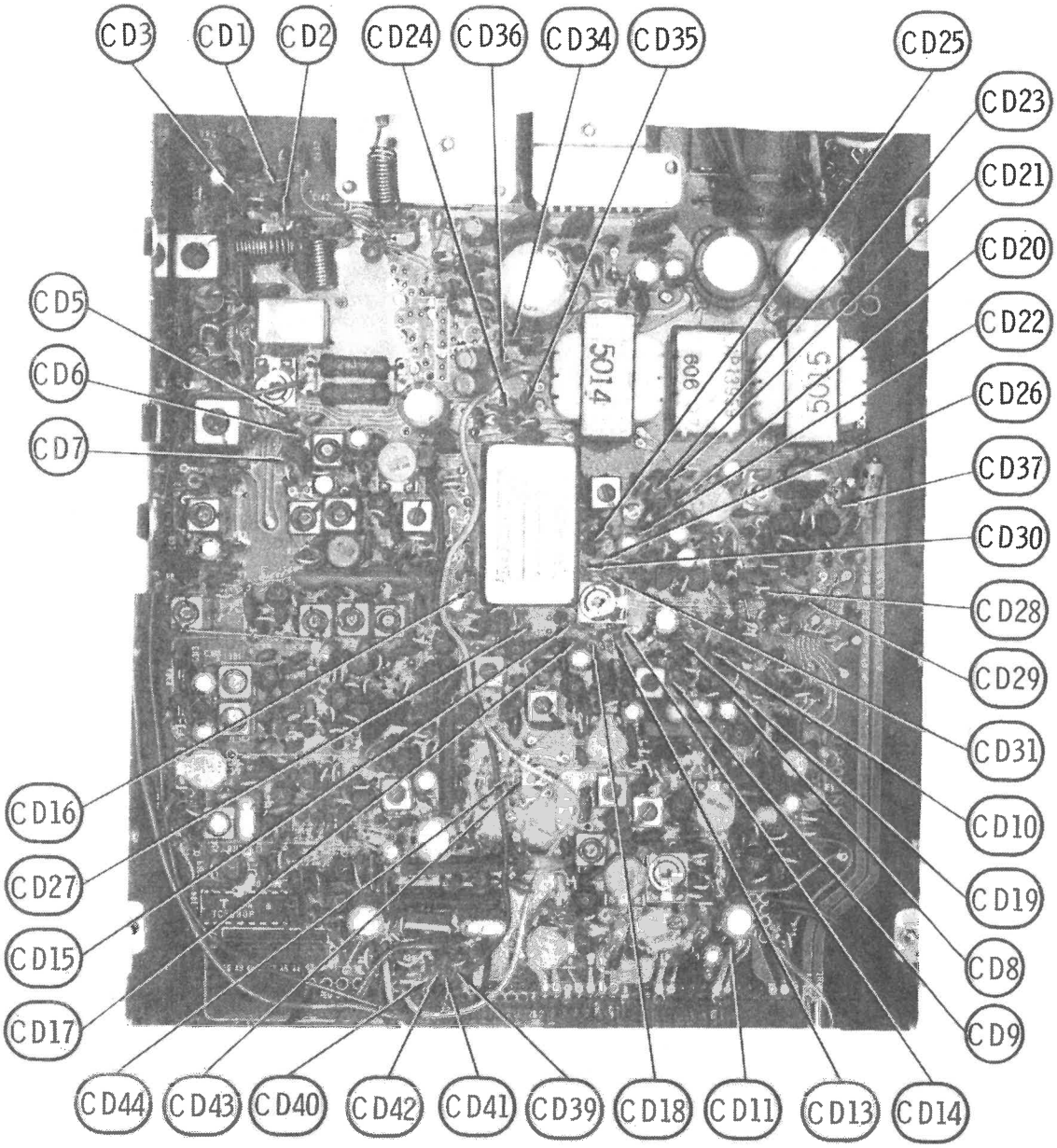
CD3
CD1
CD2
CD24
CD36
CD34
CD35
CD25
CD23
CD21
CD20
CD22
CD26
CD37
CD30
CD28
CD29
CD31
CD10
CD19
CD8
CD9
CD14
CD13
CD11
CD18
CD39
CD41
CD42
CD40
CD43
CD44
CD17
CD15
CD27
CD16
CD7
CD6
CD5
5014
606
5015

MAIN BOARD

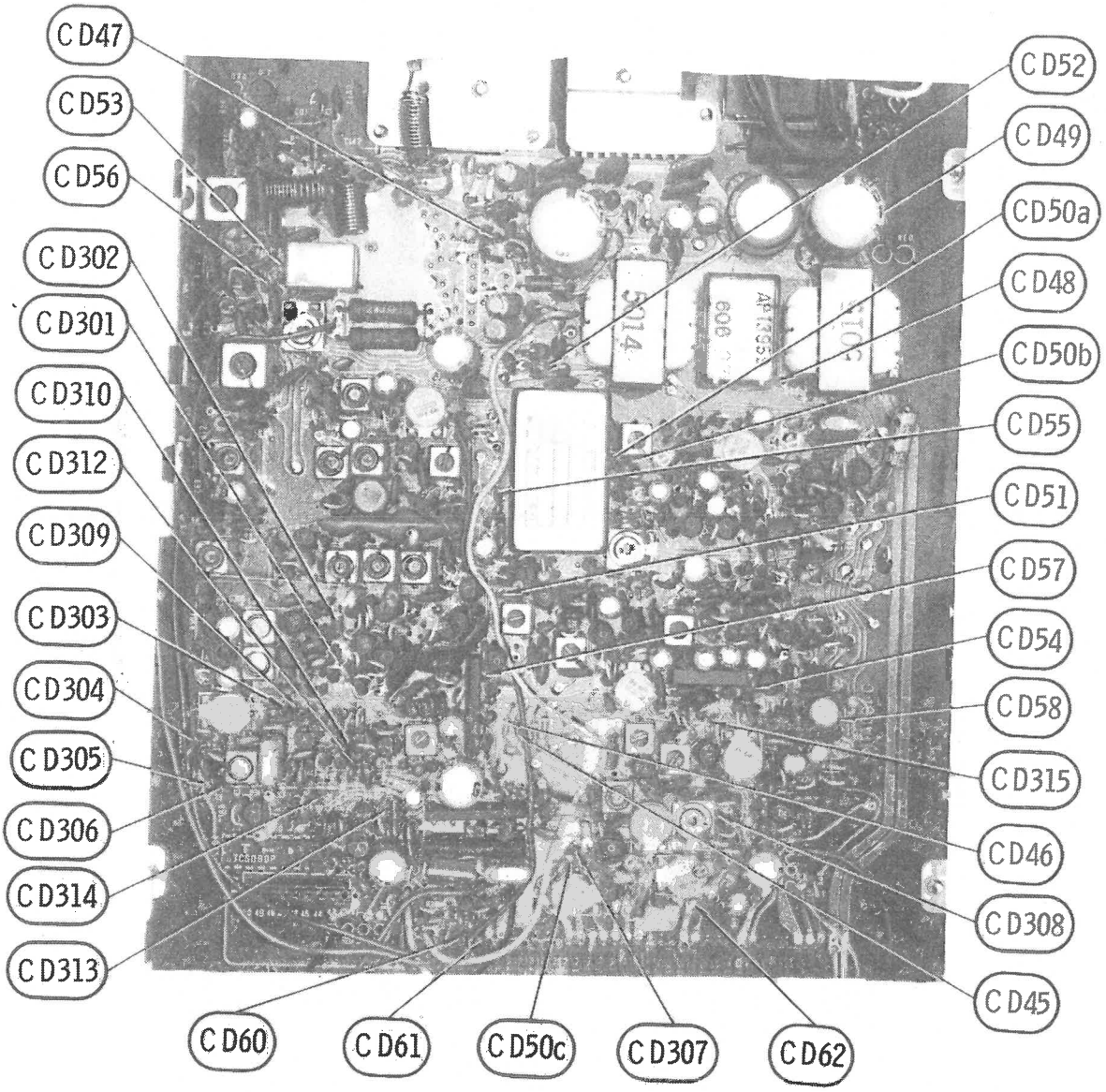
CD47
CD53
CD56
CD302
CD301
CD310
CD312
CD309
CD303
CD304
CD305
CD306
CD314
CD313
CD60
CD61
CD50c
CD307
CD62
CD52
CD49
CD50a
CD48
CD50b
CD55
CD51
CD57
CD54
CD58
CD315
CD46
CD308
CD45

MAIN BOARD

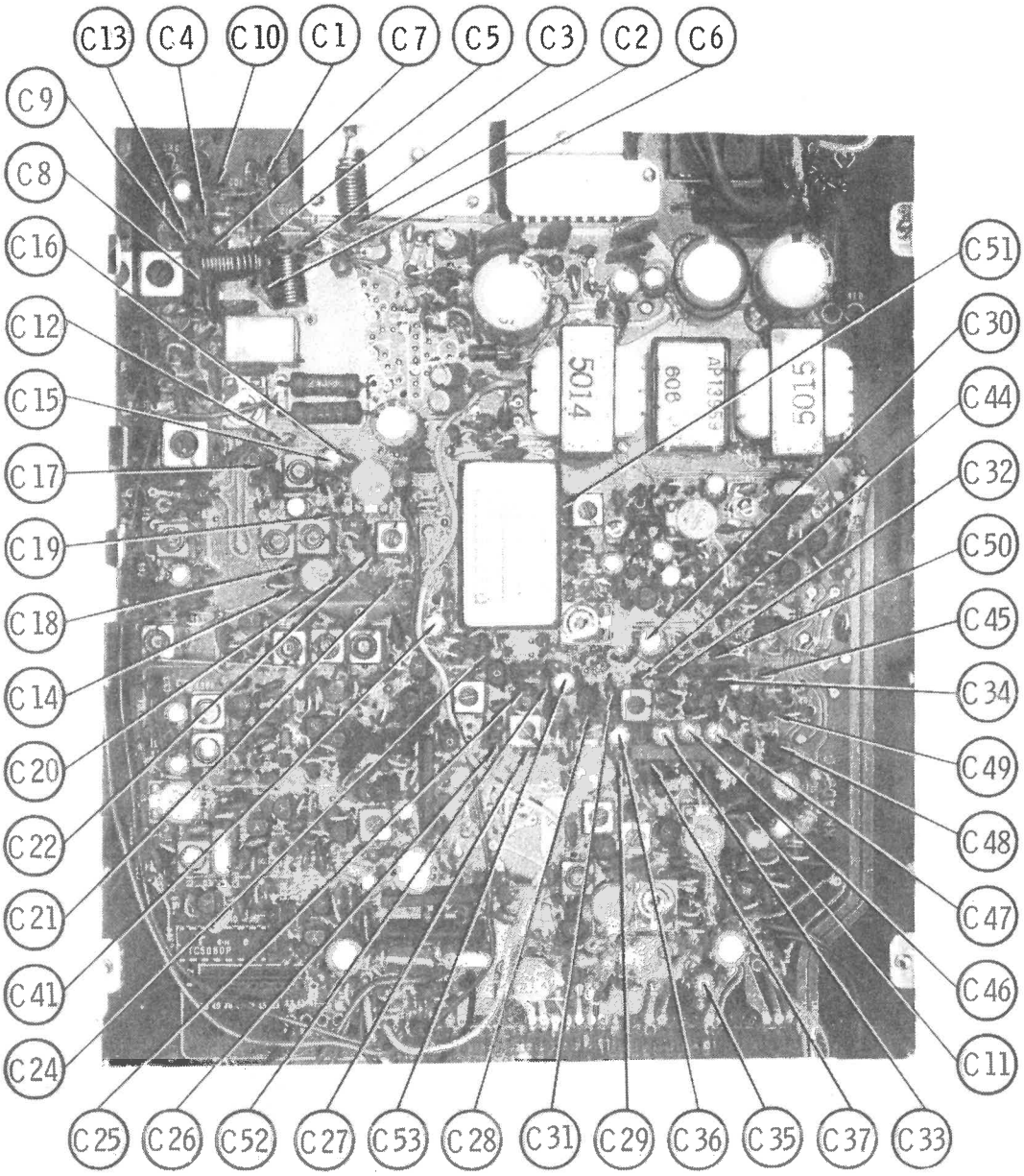
C13
C4
C10
C1
C7
C5
C3
C2
C6
C9
C8
C16
C12
C15
C17
C19
C18
C14
C20
C22
C21
C41
C24
C51
C30
C44
C32
C50
C45
C34
C49
C48
C47
C46
C11
C25
C26
C52
C27
C53
C28
C31
C29
C36
C35
C37
C33
5014
5015

MAIN BOARD

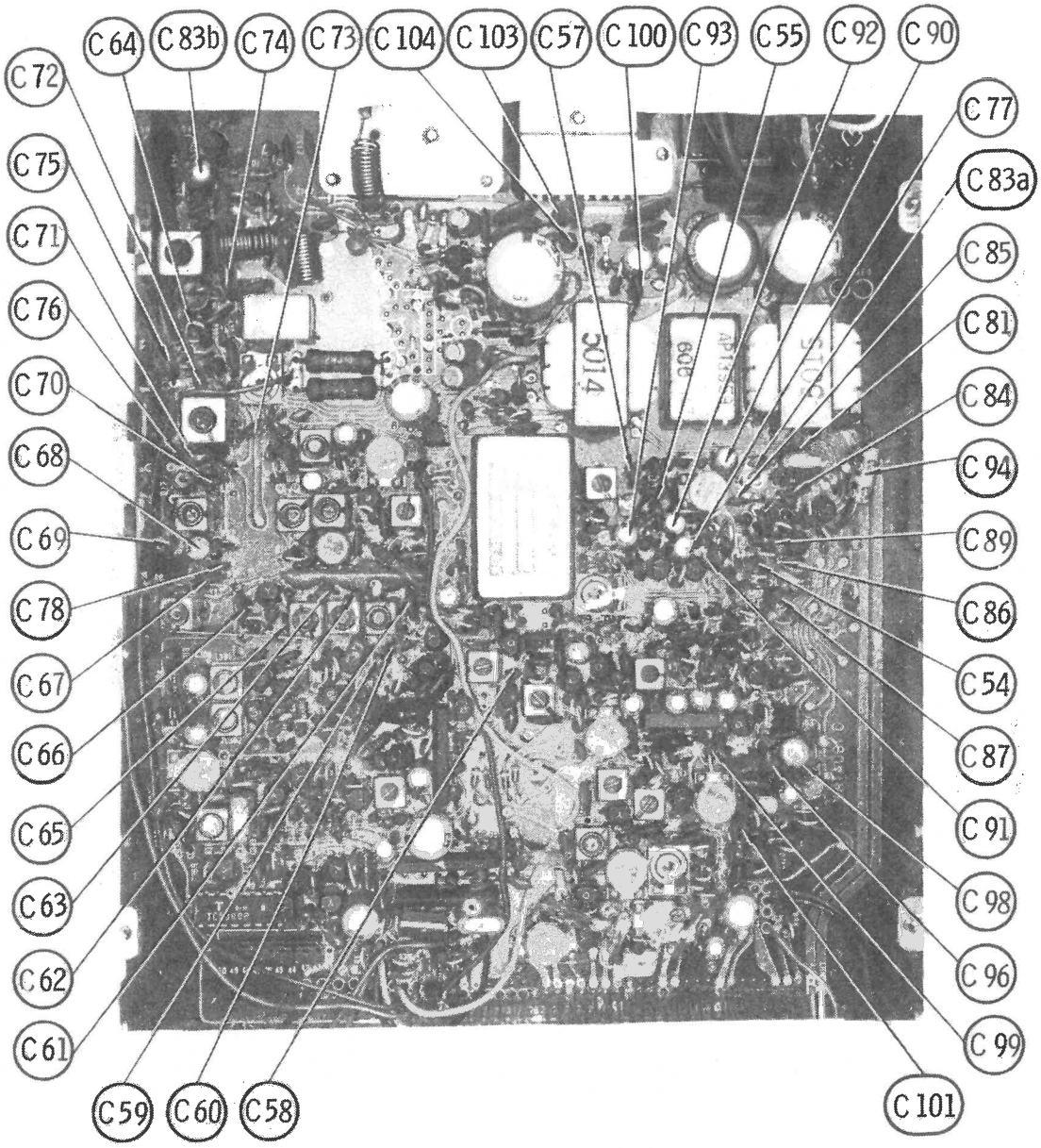
C 64
C 83b
C 74
C 73
C 104
C 103
C 57
C 100
C 93
C 55
C 92
C 90
C 72
C 75
C 71
C 76
C 70
C 68
C 69
C 78
C 67
C 66
C 65
C 63
C 62
C 61
C 59
C 60
C 58
C 77
C 83a
C 85
C 81
C 84
C 94
C 89
C 86
C 54
C 87
C 91
C 98
C 96
C 99
C 101

MAIN BOARD

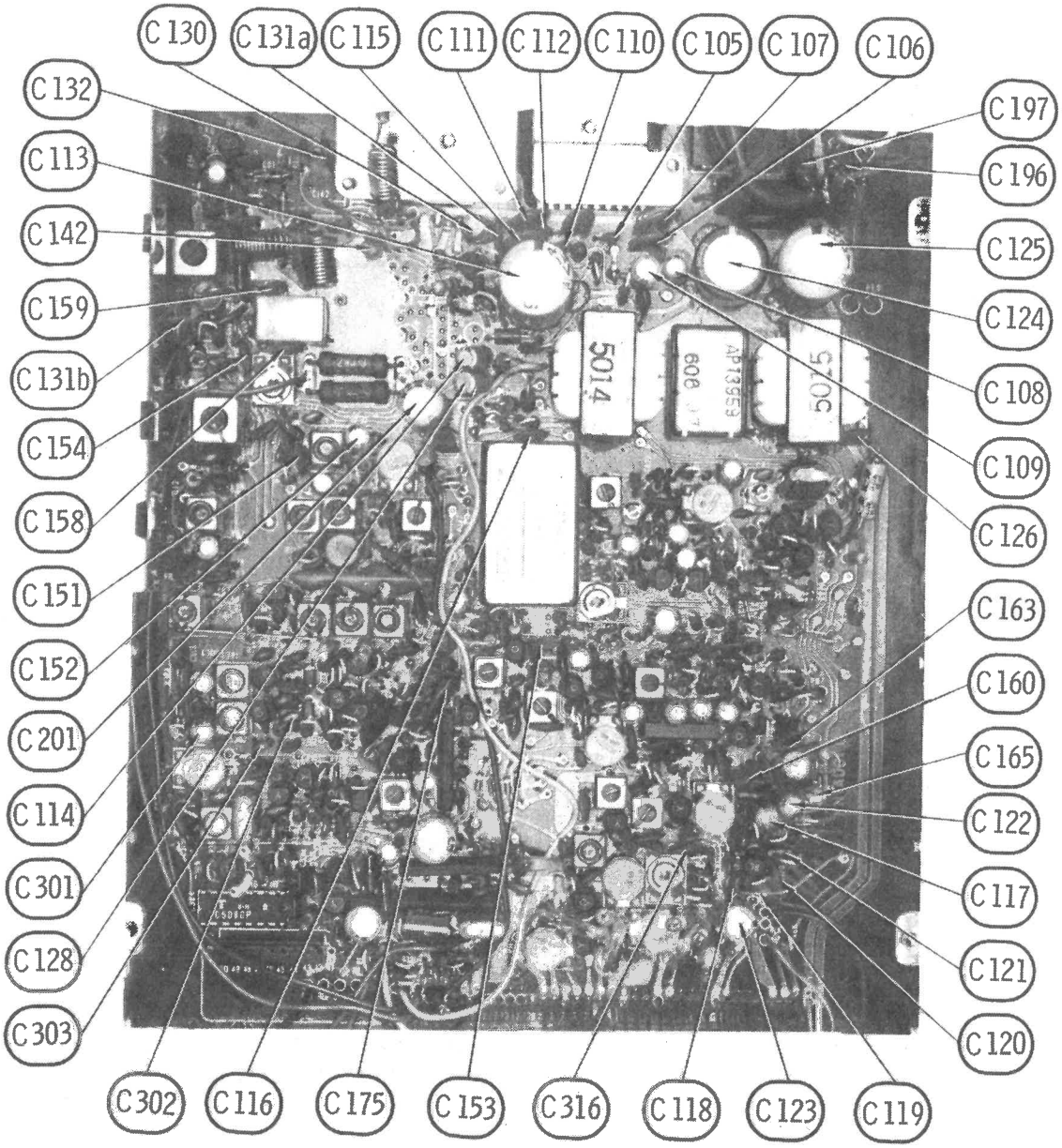
C 130
C 131a
C 115
C 111
C 112
C 110
C 105
C 107
C 106
C 132
C 113
C 142
C 159
C 131b
C 154
C 158
C 151
C 152
C 201
C 114
C 301
C 128
C 303
C 197
C 196
C 125
C 124
C 108
C 109
C 126
C 163
C 160
C 165
C 122
C 117
C 121
C 120
C 302
C 116
C 175
C 153
C 316
C 118
C 123
C 119
5014
5015

MAIN BOARD

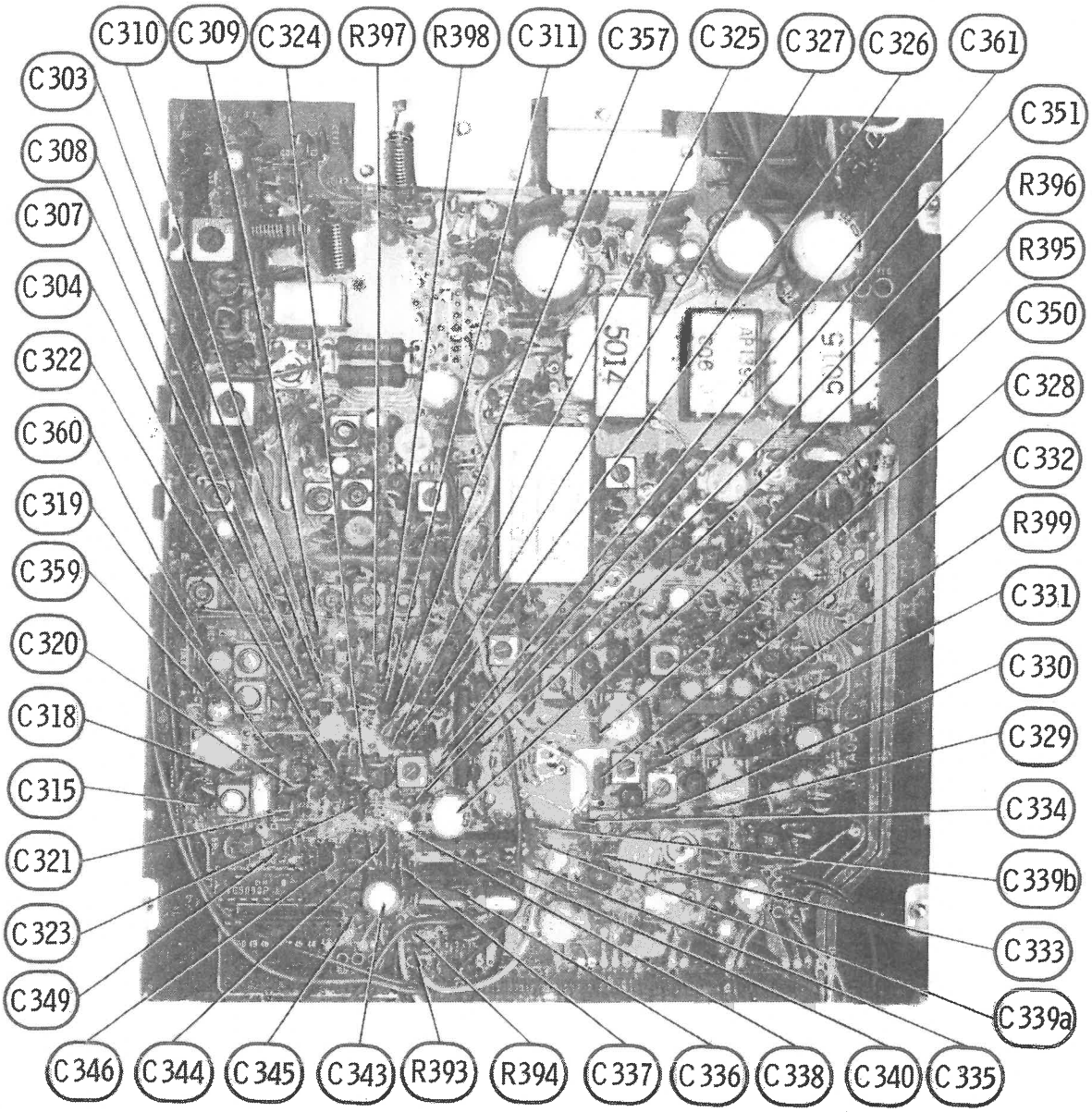
C310
C309
C324
R397
R398
C311
C357
C325
C327
C326
C361
C303
C308
C307
C304
C322
C360
C319
C359
C320
C318
C315
C321
C323
C349
C351
R396
R395
C350
C328
C332
R399
C331
C330
C329
C334
C339b
C333
C339a
C346
C344
C345
C343
R393
R394
C337
C336
C338
C340
C335

MAIN BOARD

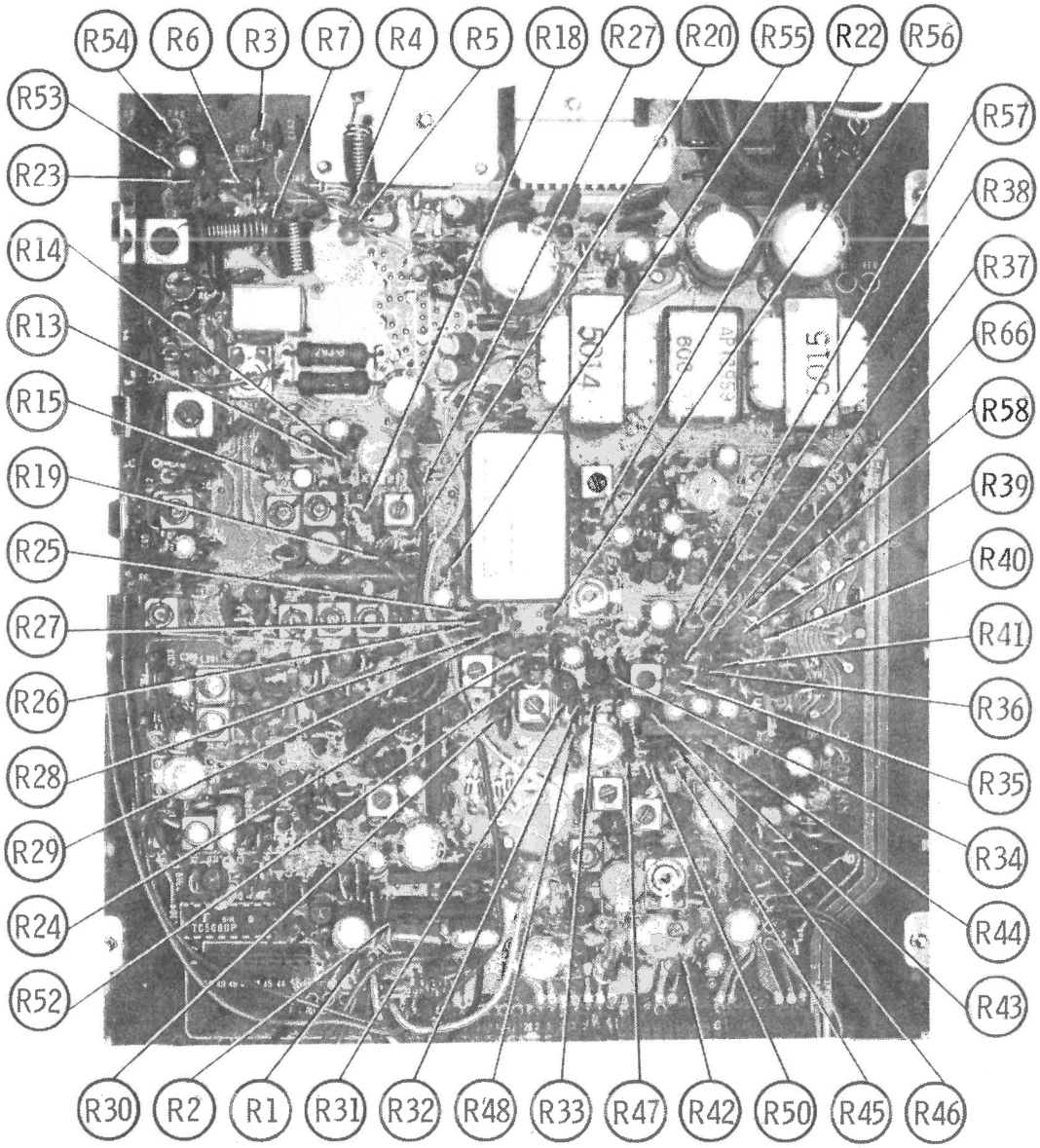
R54
R6
R3
R7
R4
R5
R18
R27
R20
R55
R22
R56
R53
R23
R14
R13
R15
R19
R25
R27
R26
R28
R29
R24
R52
R57
R38
R37
R66
R58
R39
R40
R41
R36
R35
R34
R44
R43
R30
R2
R1
R31
R32
R48
R33
R47
R42
R50
R45
R46

MAIN BOARD

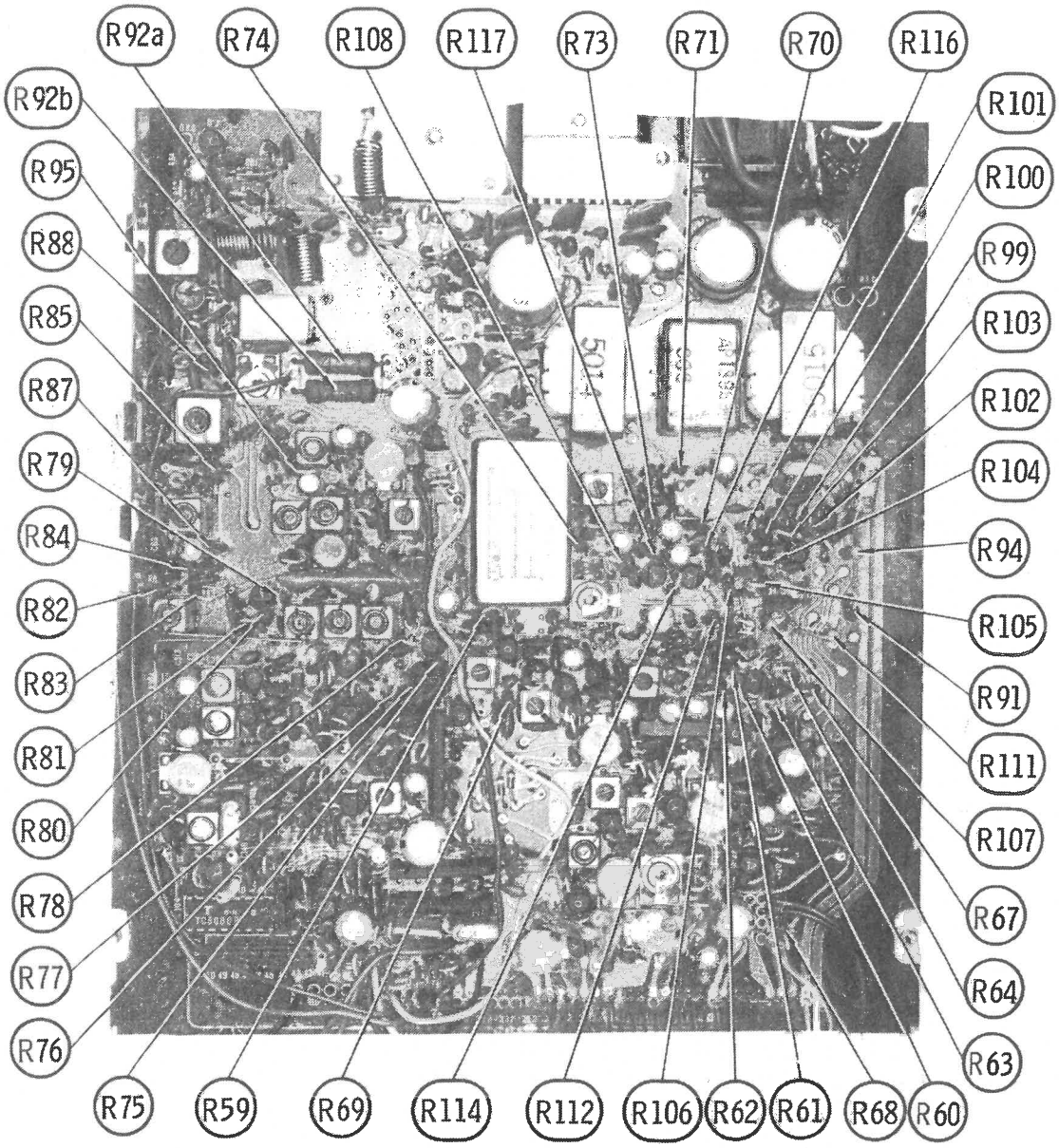
R92a
R74
R108
R117
R73
R71
R70
R116
R92b
R95
R88
R85
R87
R79
R84
R82
R83
R81
R80
R78
R77
R76
R75
R59
R69
R114
R112
R106
R62
R61
R68
R60
R63
R64
R67
R107
R111
R91
R105
R94
R104
R102
R103
R99
R100
R101

MAIN BOARD

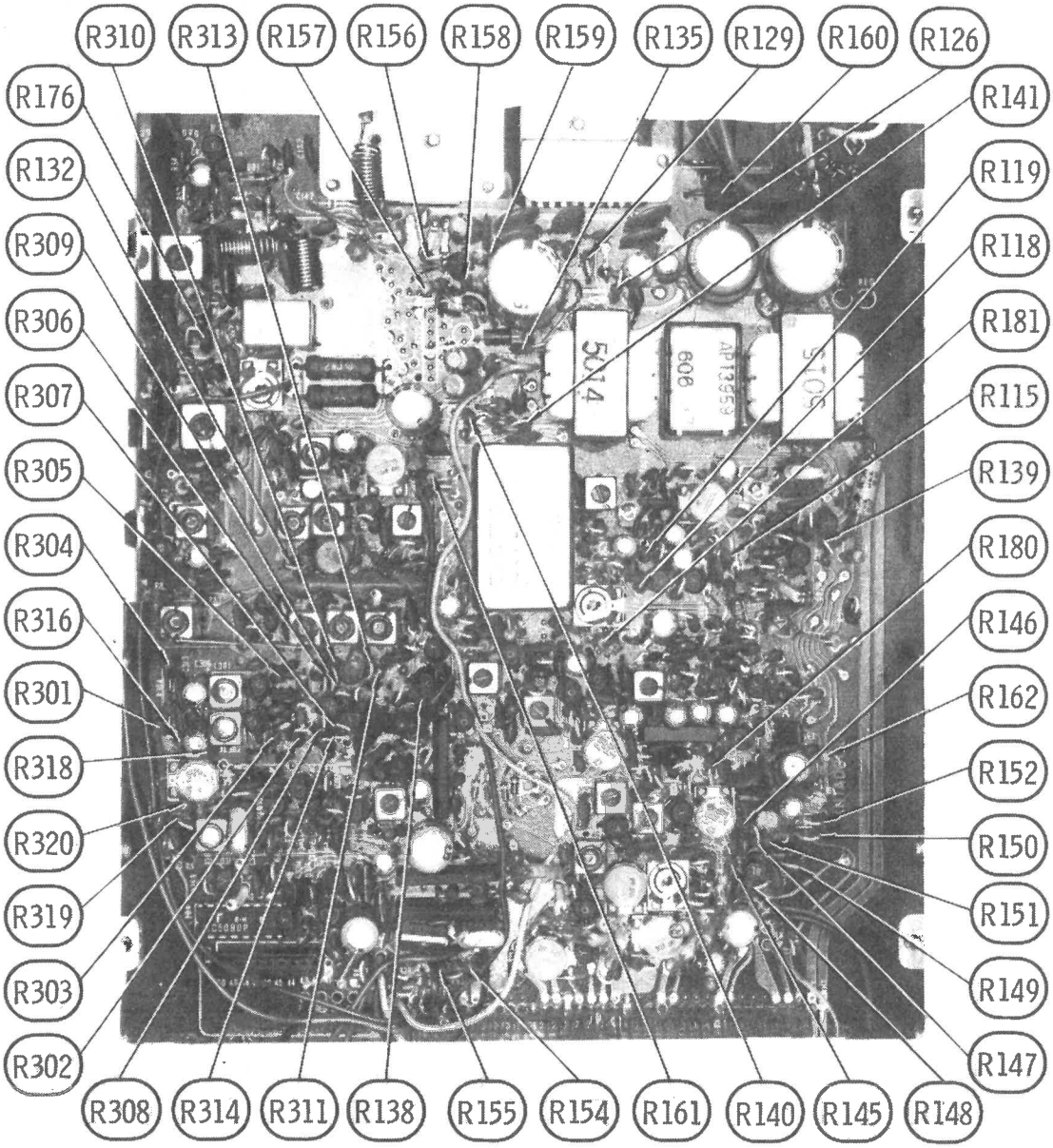
R310
R313
R157
R156
R158
R159
R135
R129
R160
R126
R176
R141
R132
R119
R309
R118
R306
R181
R307
R115
R305
R139
R304
R180
R316
R146
R301
R162
R318
R152
R320
R150
R319
R151
R303
R149
R302
R147
R308
R314
R311
R138
R155
R154
R161
R140
R145
R148

MAIN BOARD

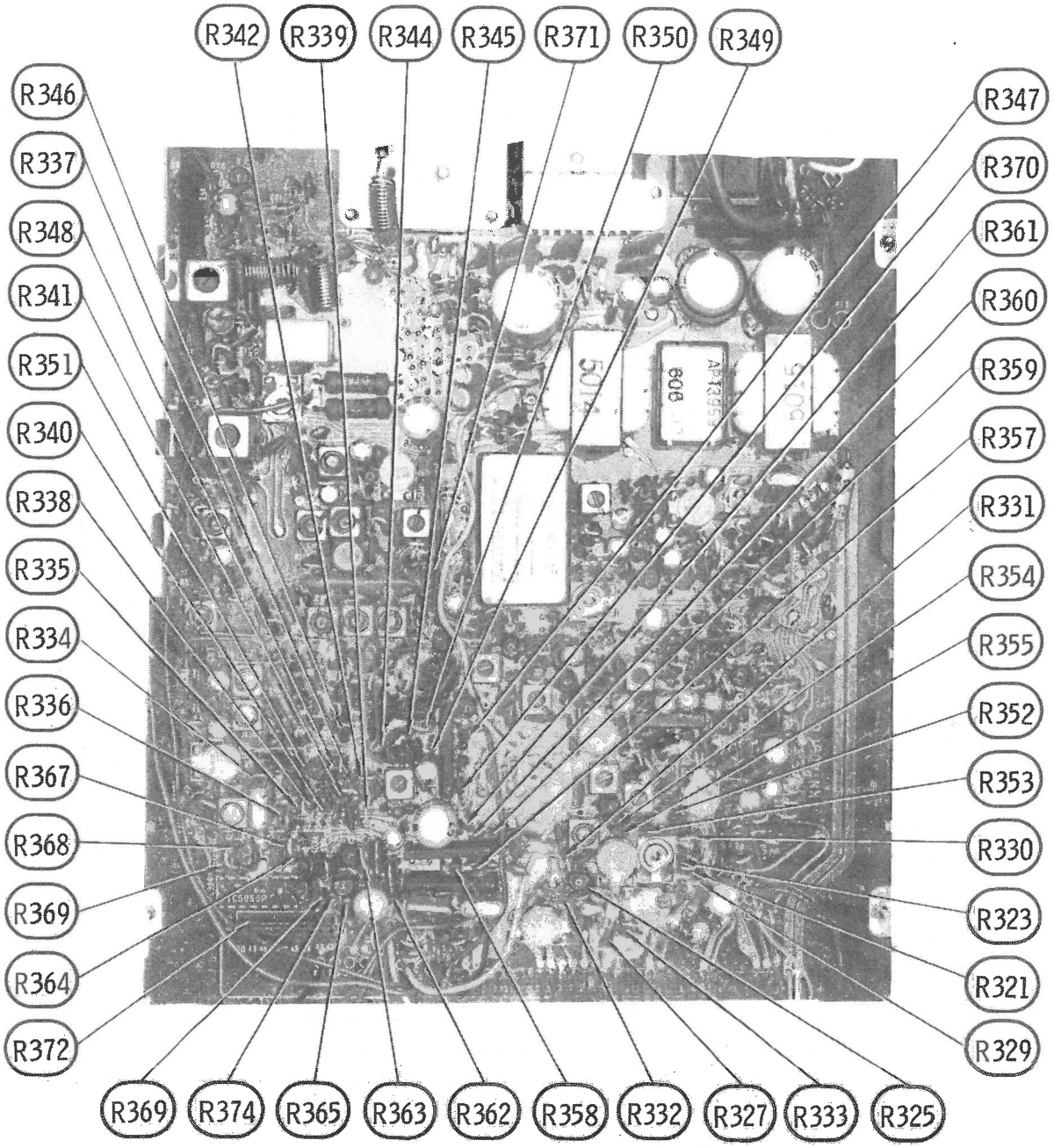
R342
R339
R344
R345
R371
R350
R349
R346
R337
R348
R341
R351
R340
R338
R335
R334
R336
R367
R368
R369
R364
R372
R347
R370
R361
R360
R359
R357
R331
R354
R355
R352
R353
R330
R323
R321
R329
R369
R374
R365
R363
R362
R358
R332
R327
R333
R325

MAIN BOARD

A Howard W. Sams CIRCUITRACE® Photo

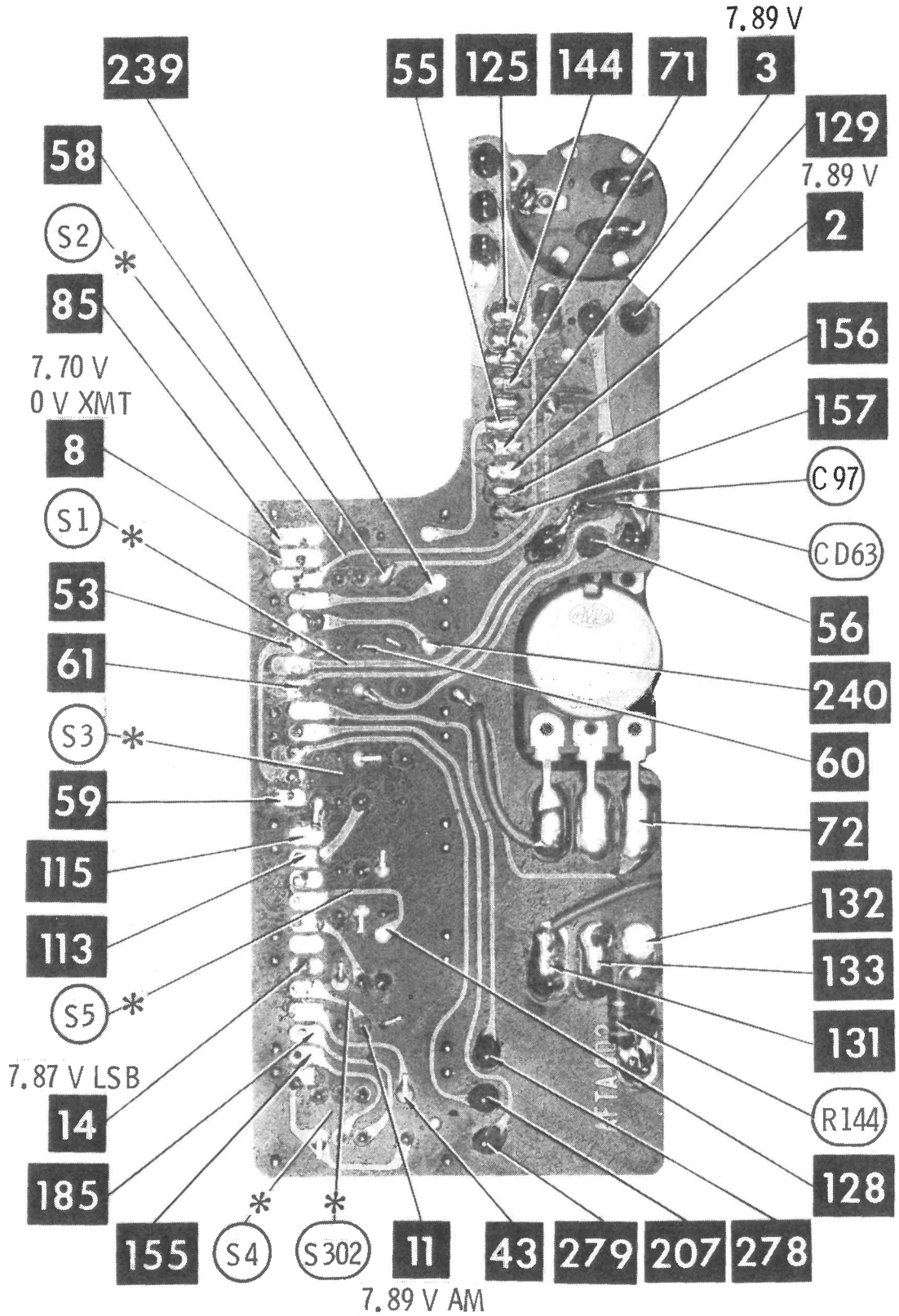

* Located on bottom of board

CONTROL BOARD

A Howard W. Sams CIRCUITRACE® Photo

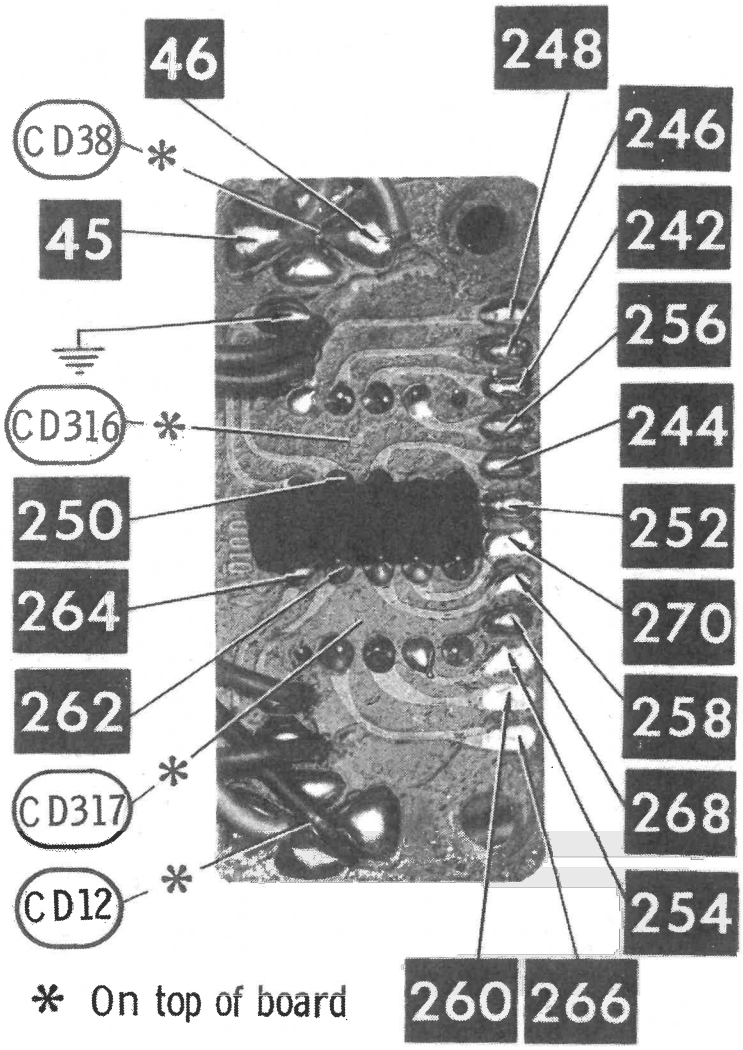

* On top of board

LED BOARD

A Howard W. Sams CIRCUITRACE® Photo

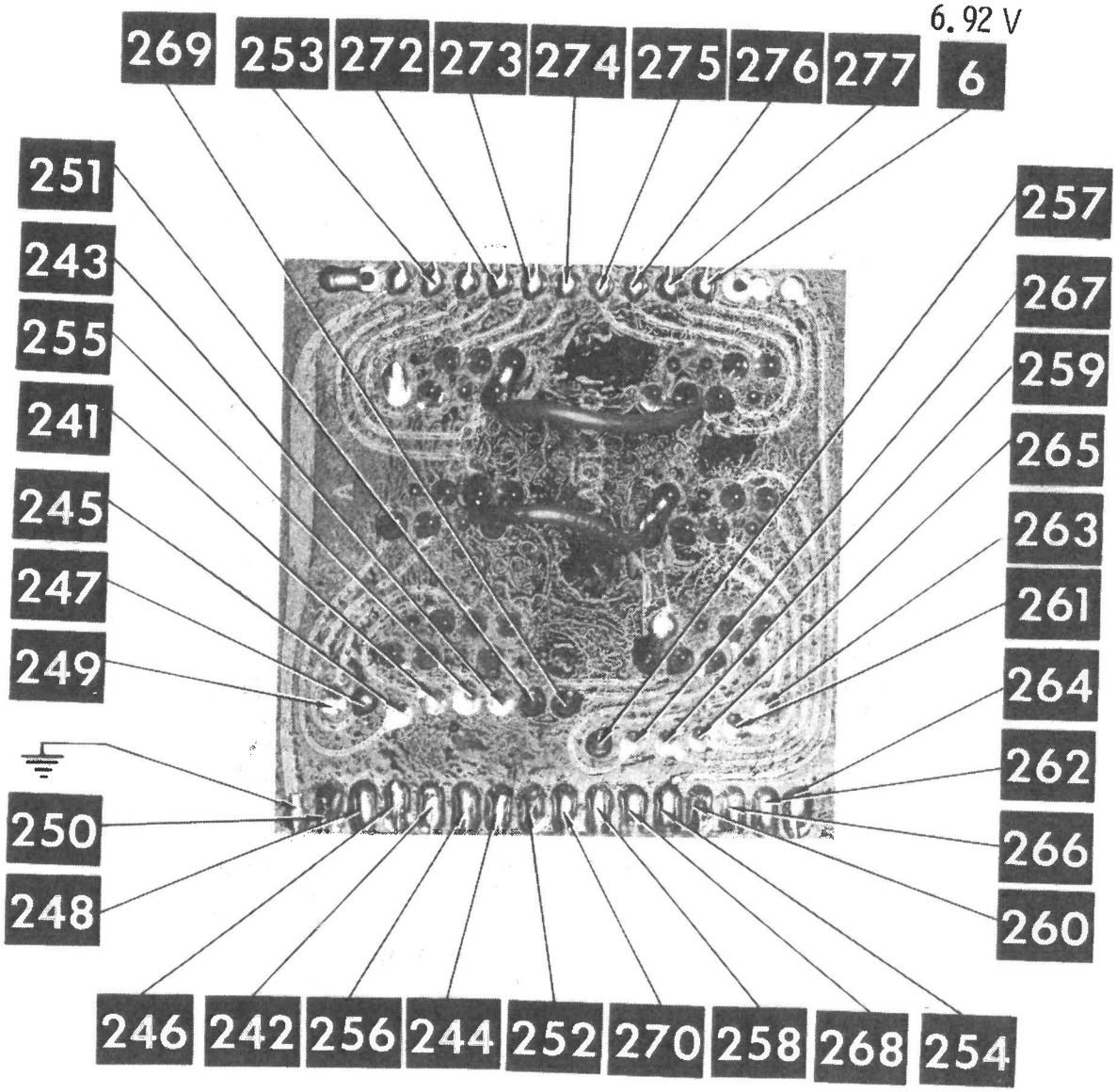

CH. SELECTOR BOARD

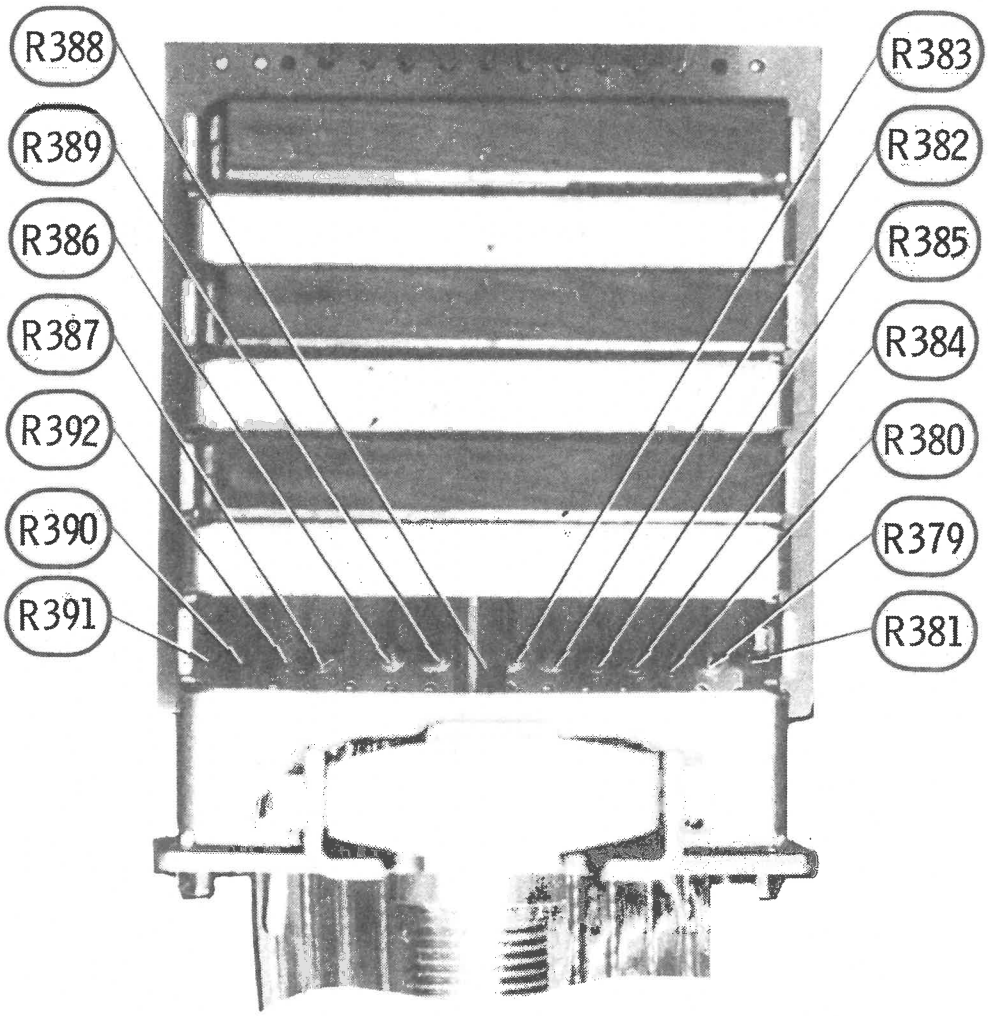

CH. SELECTOR BOARD

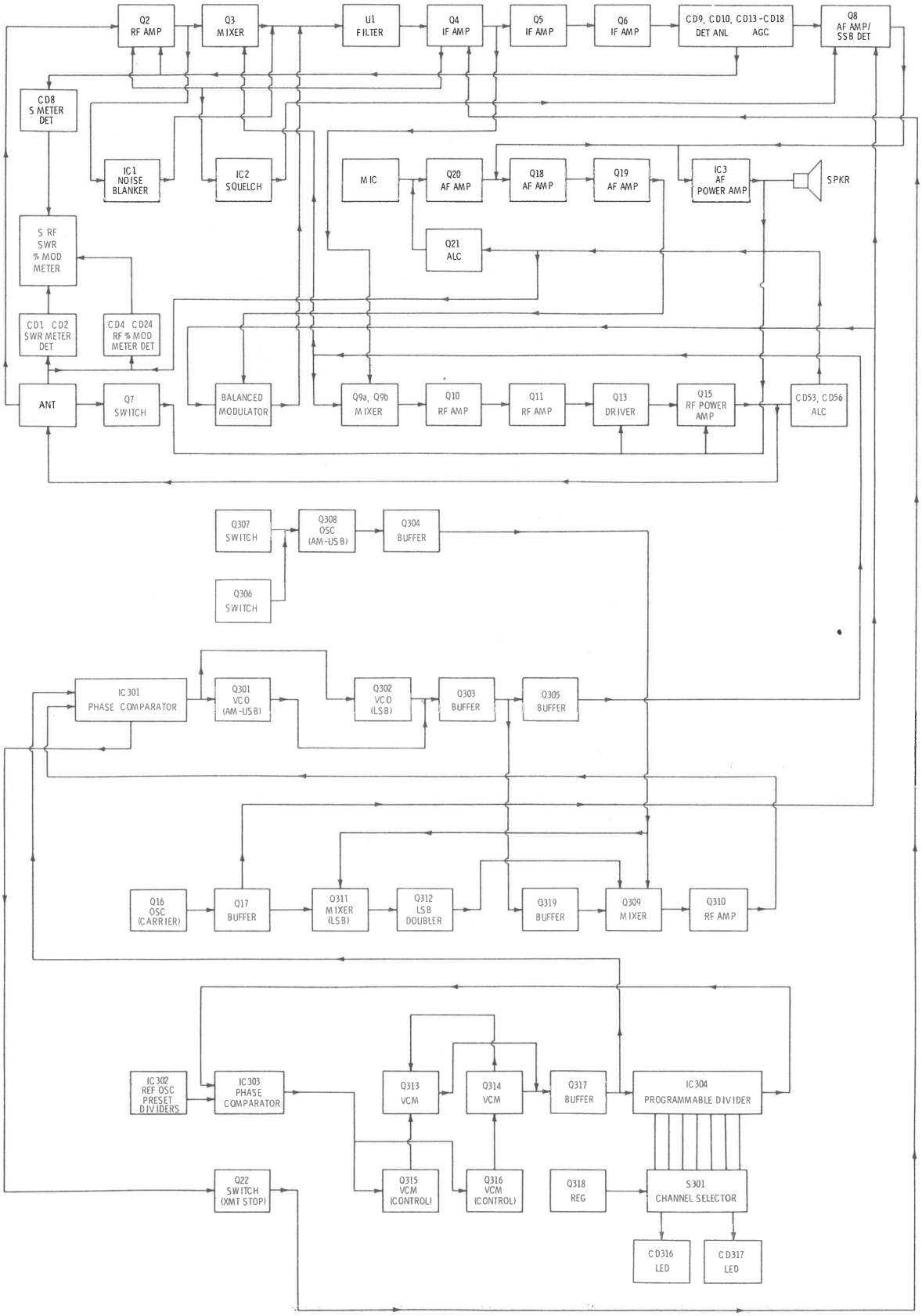

BLOCK DIAGRAM

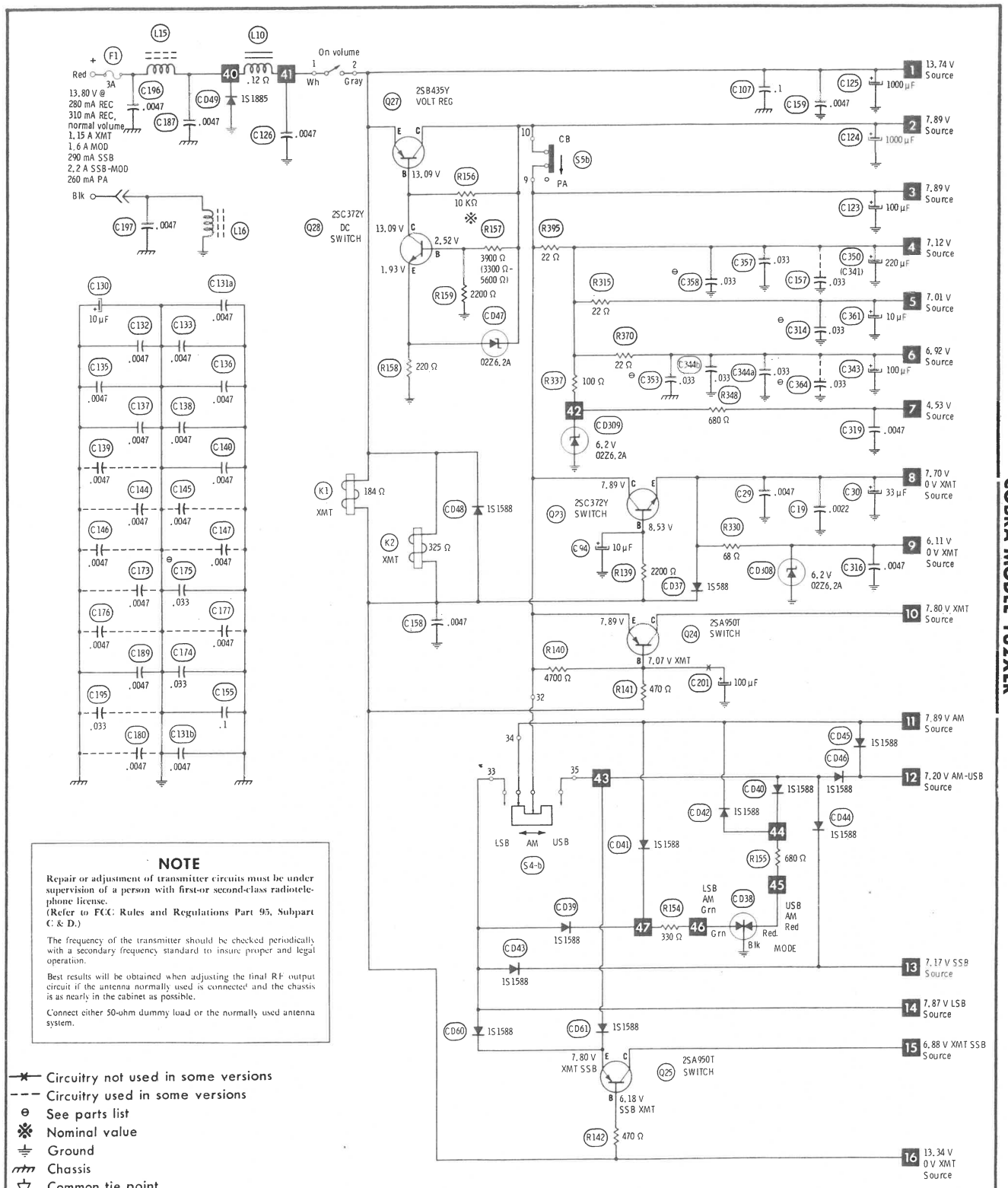

NOTE

Repair or adjustment of transmitter circuits must be under supervision of a person with first-or second-class radiotelephone license.
(Refer to FCC Rules and Regulations Part 95, Subpart C & D.)

The frequency of the transmitter should be checked periodically with a secondary frequency standard to insure proper and legal operation.

Best results will be obtained when adjusting the final RF output circuit if the antenna normally used is connected and the chassis is as nearly in the cabinet as possible.

Connect either 50-ohm dummy load or the normally used antenna system.

—✱— Circuitry not used in some versions
- - - Circuitry used in some versions
⊖ See parts list
※ Nominal value
⏚ Ground
Chassis
▽ Common tie point

Measurements made in Channel 1 with switching as shown unless noted.
Item numbers in rectangles appear in the alignment/adjustment instructions.
Supply voltage maintained as shown at input.
Voltages measured with digital meter, no signal.
Controls adjusted for normal operation.
Arrow at control indicates direction of advance.
Terminal identification may not be found on unit.
Resistors are 1/2W or less, 5% unless noted.
Value in ( ) used in some versions.

Terminal Guides

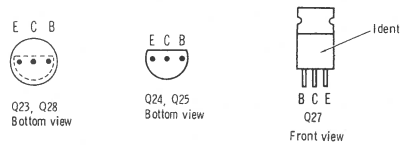

A PHOTOFACT STANDARD NOTATION SCHEMATIC
WITH CIRCUITRACE®

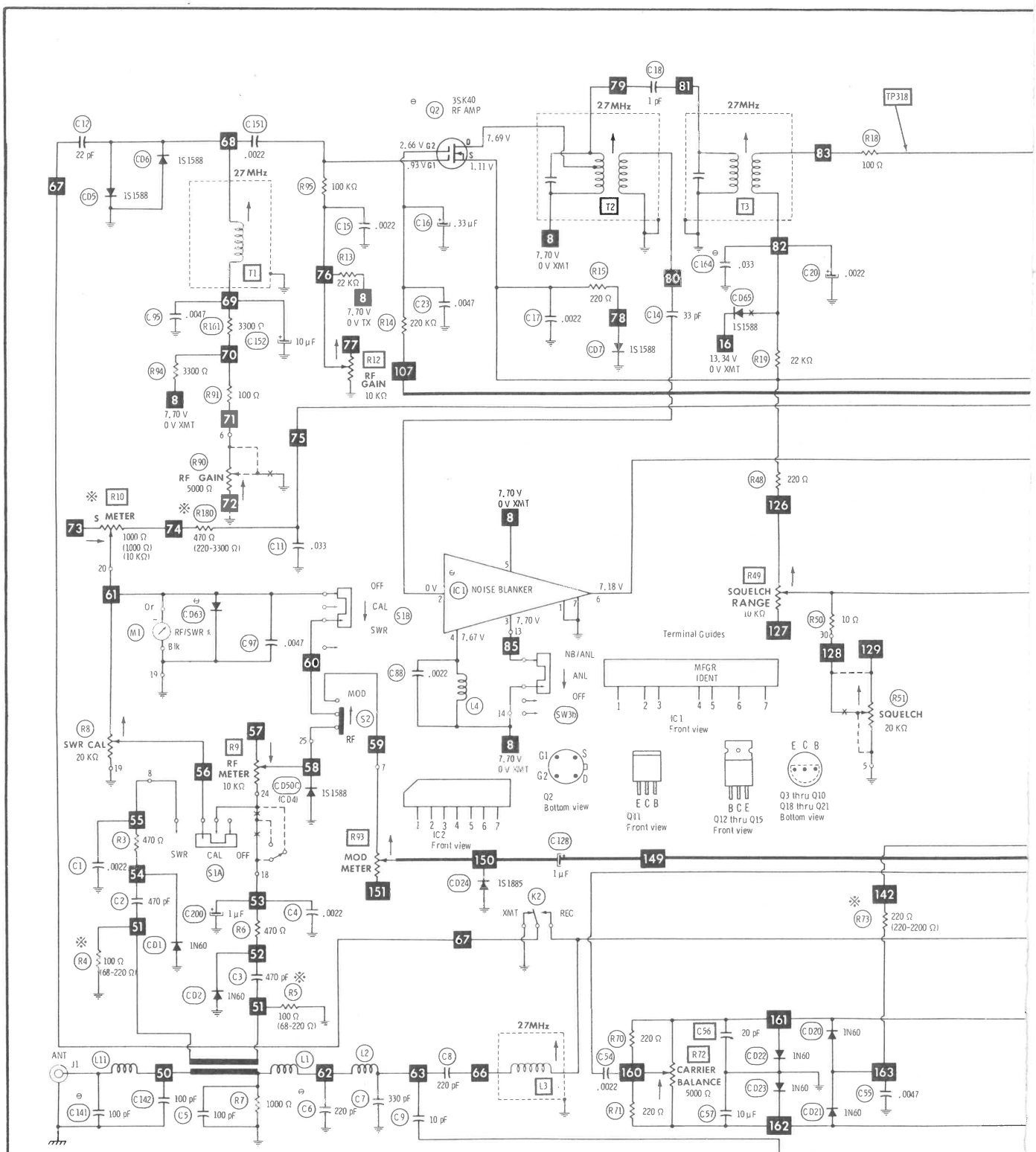

Circuitry not used in some versions
Circuitry used in some versions
See parts list
Nominal value
Ground
Chassis
Common tie point

A PHOTOFACT STANDARD NOTATION SCHEMATIC
WITH CIRCUITRACE®

Measurements made in Channel 1 with switching as shown unless noted.
Item numbers in rectangles appear in the alignment/adjustment instructions.
Supply voltage maintained as shown at input.
Voltages measured with digital meter, no signal.
Controls adjusted for normal operation.
Arrow at control indicates direction of advance.
Terminal identification may not be found on unit.
Resistors are 1/2W or less, 5% unless noted.
Value in ( ) used in some versions.

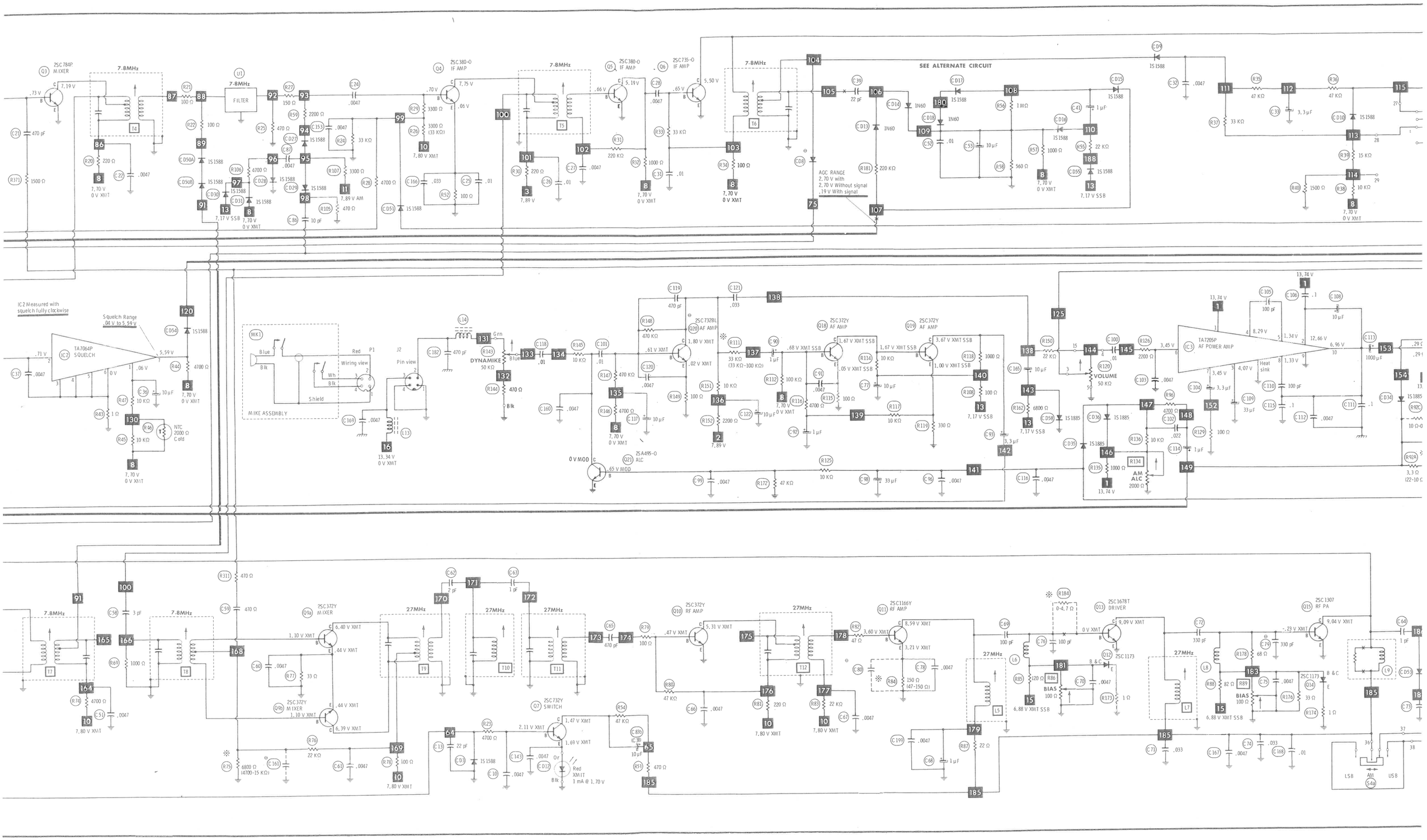
2SC784P MIXER
7.8MHz
FILTER
2SC380-O IF AMP
2SC735-O IF AMP
SEE ALTERNATE CIRCUIT
AGC RANGE
2.70 V with
2.70 V Without signal
.19 V With signal
IC2 Measured with squelch fully clockwise
Squelch Range
.04 V to 5.59 V
TA7064P SQUELCH
NTC 2000 Ω Cold
MIKE ASSEMBLY
DYNAMIKE 50 KΩ
2SC732BL AF AMP
2SC372Y AF AMP
2SA495-O ALC
VOLUME 50 KΩ
TA7205P AF POWER AMP
Heat sink
AM ALC 2000 Ω
2SC372Y MIXER
27MHz
2SC732Y SWITCH
Red XMIT 1 mA @ 1.70 V
2SC372Y RF AMP
2SC1166Y RF AMP
2SC1678T DRIVER
2SC1173
2SC1307 RF PA
BIAS 100 Ω
LSB
AM
USB

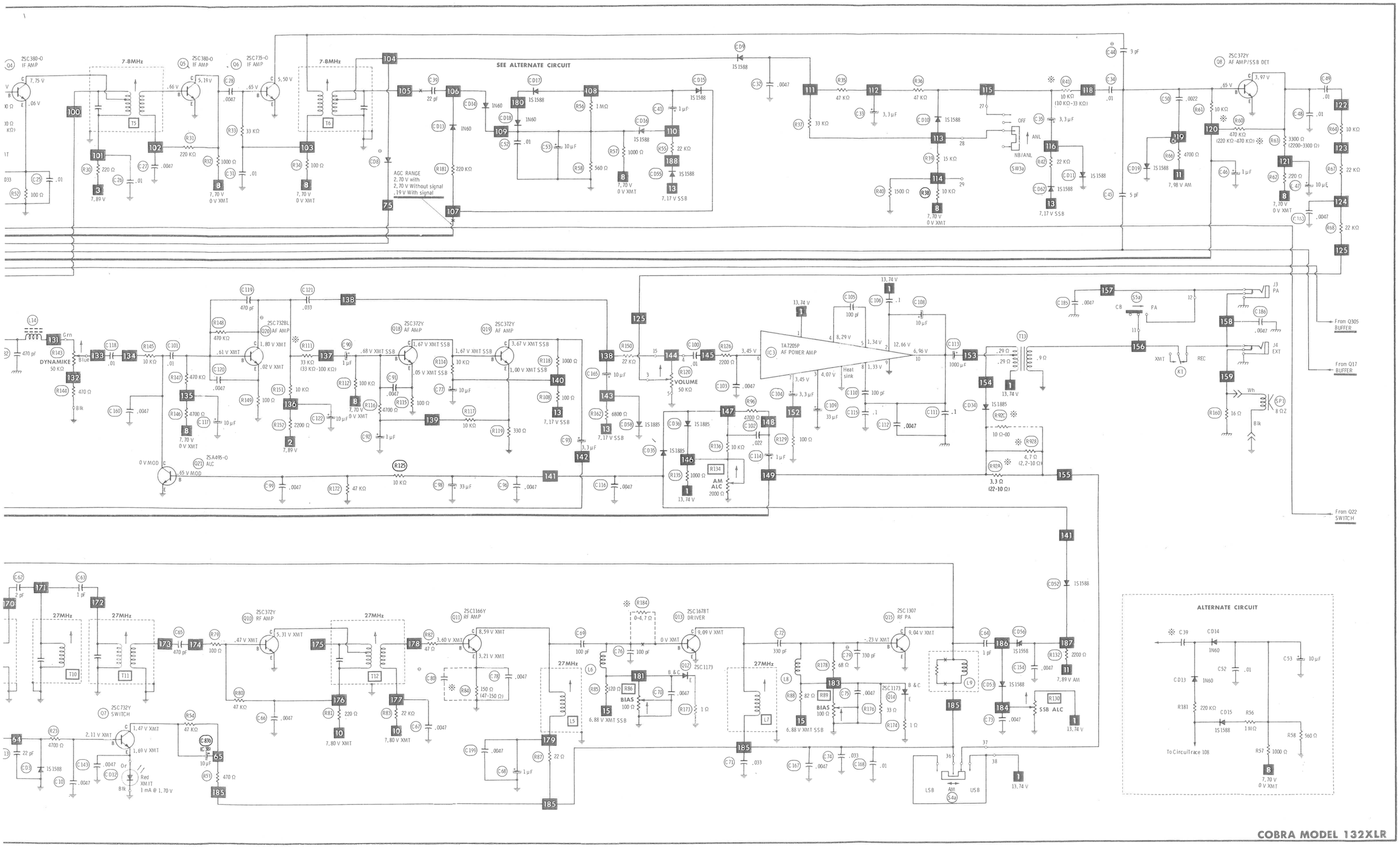

COBRA MODEL 132XLR

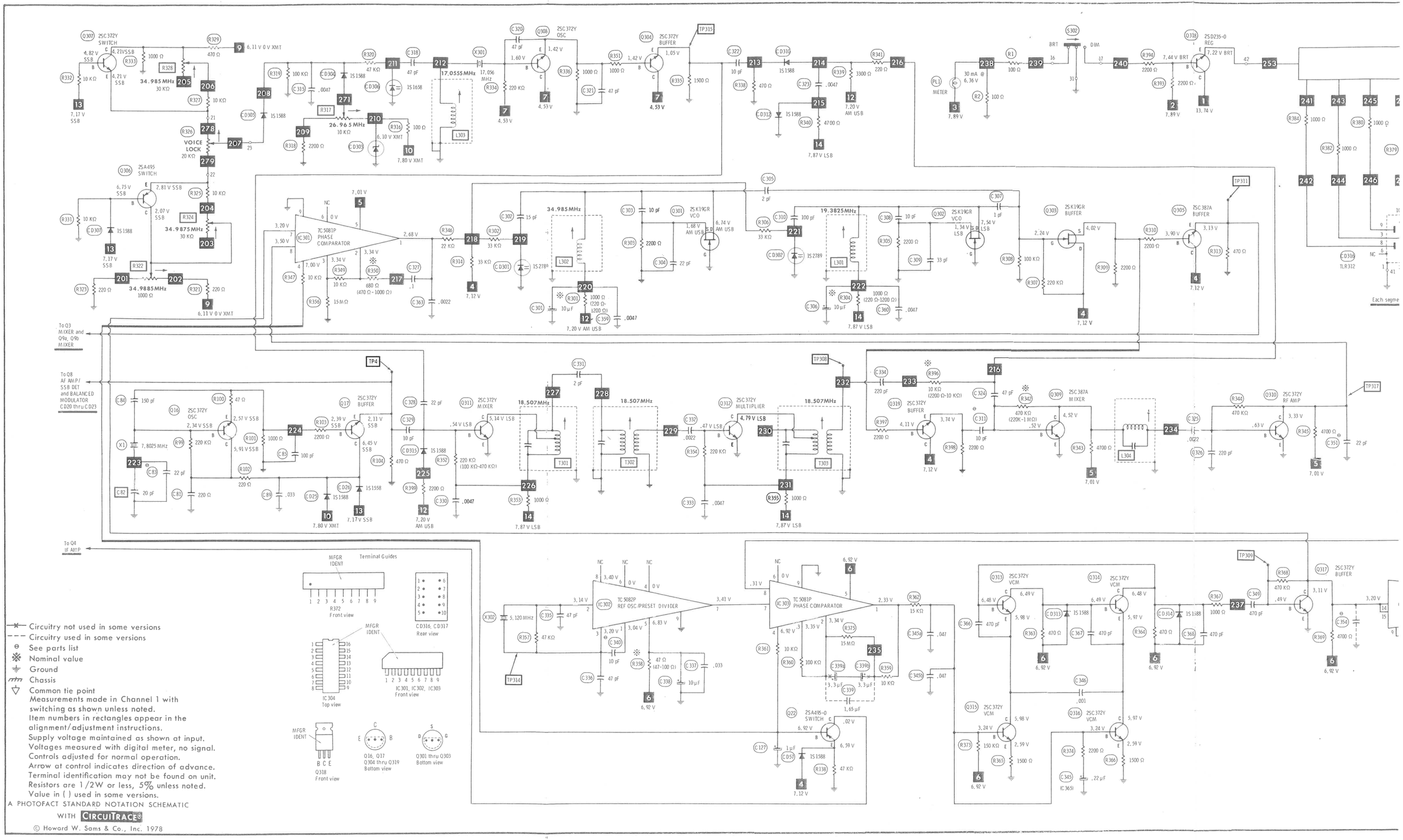

Circuitry not used in some versions
Circuitry used in some versions
See parts list
Nominal value
Ground
Chassis
Common tie point
Measurements made in Channel 1 with switching as shown unless noted.
Item numbers in rectangles appear in the alignment/adjustment instructions.
Supply voltage maintained as shown at input.
Voltages measured with digital meter, no signal.
Controls adjusted for normal operation.
Arrow at control indicates direction of advance.
Terminal identification may not be found on unit.
Resistors are 1/2W or less, 5% unless noted.
Value in ( ) used in some versions.

A PHOTOFACT STANDARD NOTATION SCHEMATIC WITH CIRCUITRACE®

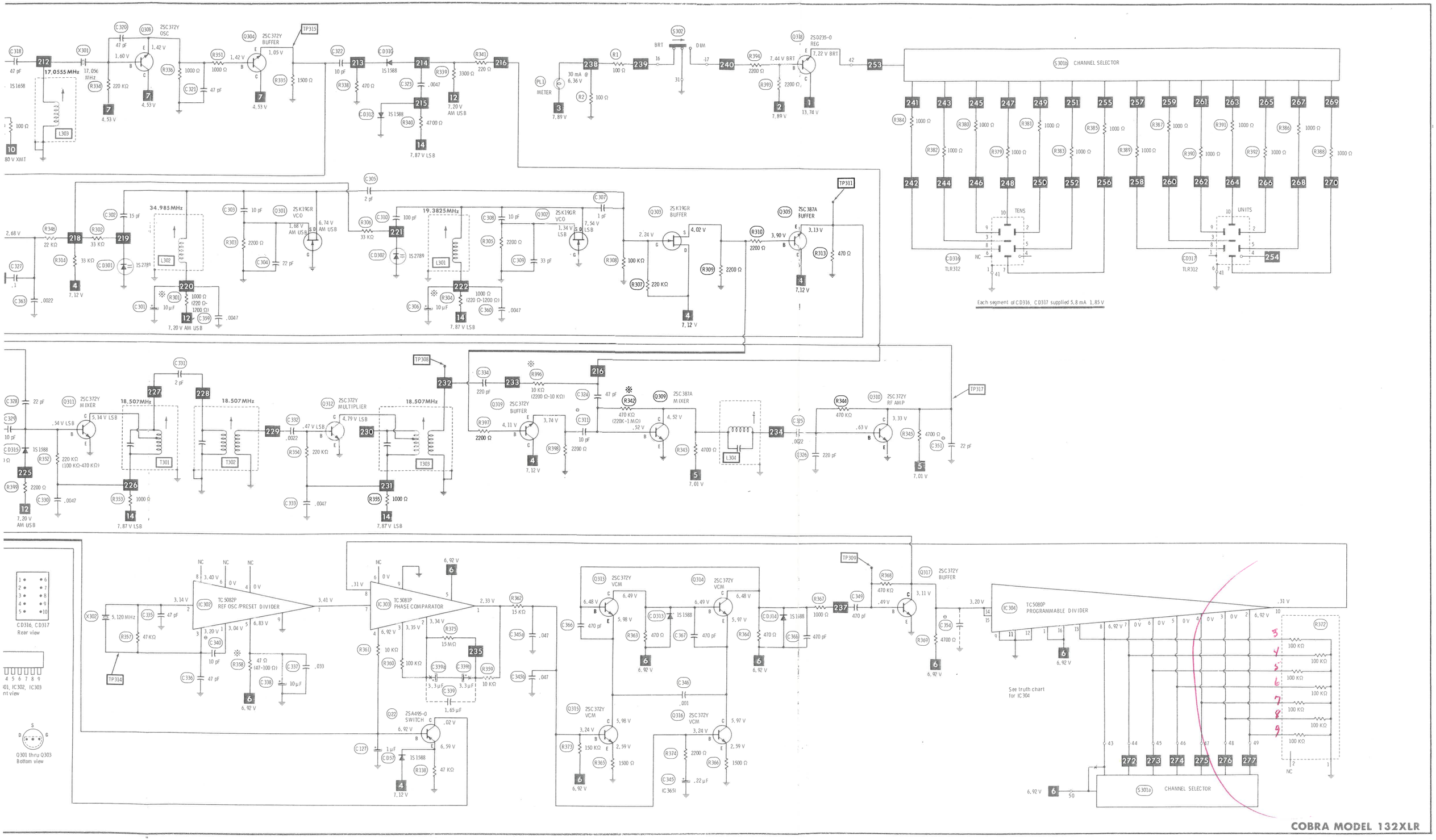

COBRA MODEL 132XLR

PARTS LIST AND DESCRIPTION

(When ordering parts, state Model, Part Number, and Description.)

SEMICONDUCTORS (Select replacement transistor for best results)

ITEM No.	TYPE No.	MFGR. PART No.	REPLACEMENT DATA									
			GENERAL ELECTRIC PART No.	MALLORY PART No.	MOTOROLA PART No.	RAYTHEON PART No.	RCA PART No.	SPRAGUE PART No.	SYLVANIA PART No.	THORDARSON PART No.	WORKMAN PART No.	ZENITH PART No.
CD1	1N60	150-001-9-005	1N60	PTC206	HEPR9135	RE 47	SK3088	RT-263	ECG109	1N60	WEP134	ZEN-430
CD2	1N60	150-001-9-005	1N60	PTC206	HEPR9135	RE 47	SK3088	RT-263	ECG109	1N60	WEP134	ZEN-430
CD3	1S1588	151-051-9-001	GE-514	PTC214	HEPR0602	RE 52	SK3100	RT-218	ECG519	1N4148	WEP925	
CD4	1S1588	151-051-9-001	GE-514	PTC214	HEPR0602	RE 52	SK3100	RT-218	ECG519	1N4148	WEP925	
CD5	1S1588	151-051-9-001	GE-514	PTC214	HEPR0602	RE 52	SK3100	RT-218	ECG519	1N4148	WEP925	
CD6	1S1588	151-051-9-001	GE-514	PTC214	HEPR0602	RE 52	SK3100	RT-218	ECG519	1N4148	WEP925	
CD7	1S1588	151-051-9-001	GE-514	PTC214	HEPR0602	RE 52	SK3100	RT-218	ECG519	1N4148	WEP925	
CD8	1N60	150-001-9-005	1N60	PTC206	HEPR9135	RE 47	SK3088	RT-263	ECG109	1N60	WEP134	ZEN-430
	1S1588	151-051-9-001	GE-514	PTC214	HEPR0602	RE 52	SK3100	RT-218	ECG519	1N4148	WEP925	
CD9	1S1588	151-051-9-001	GE-514	PTC214	HEPR0602	RE 52	SK3100	RT-218	ECG519	1N4148	WEP925	
CD10	1S1588	151-051-9-001	GE-514	PTC214	HEPR0602	RE 52	SK3100	RT-218	ECG519	1N4148	WEP925	
CD11	1S1588	151-051-9-001	GE-514	PTC214	HEPR0602	RE 52	SK3100	RT-218	ECG519	1N4148	WEP925	
CD13	1N60	150-001-9-005	1N60	PTC206	HEPR9135	RE 47	SK3088	RT-263	ECG109	1N60	WEP134	ZEN-430
CD14	1N60	150-001-9-005	1N60	PTC206	HEPR9135	RE 47	SK3088	RT-263	ECG109	1N60	WEP134	ZEN-430
CD15	1S1588	151-051-9-001	GE-514	PTC214	HEPR0602	RE 52	SK3100	RT-218	ECG519	1N4148	WEP925	
CD16			GE-514	PTC214	HEPR0602	RE 52	SK3100	RT-218	ECG519	1N4148	WEP925	
CD18			GE-514	PTC214	HEPR0602	RE 52	SK3100	RT-218	ECG519	1N4148	WEP925	
CD19	1S1588	151-051-9-001	GE-514	PTC214	HEPR0602	RE 52	SK3100	RT-218	ECG519	1N4148	WEP925	
CD20	1N60	157-007-9-001	1N60(7)	PTC206M(6)	HEPR9135(7)	RE 86(6)	SK3088(7)	RT-263(7)	ECG110(6)	1N60(7)	WEP134(7)	ZEN-430(7)
CD21	1N60	157-007-9-001										
CD22	1N60	157-007-9-001	1N60(7)	PTC206M(6)	HEPR9135(7)	RE 86(6)	SK3088(7)	RT-263(7)	ECG110(6)	1N60(7)	WEP134(7)	ZEN-430(7)
CD23	1N60	157-007-9-001										
CD24	1S1885	151-030-9-005	GE-504A	PTC201	HEPR0052	RE 49	SK3030	RT-213	ECG116	1N4004	WEP156	212-61
CD25	1S1588	151-051-9-001	GE-514	PTC214	HEPR0602	RE 52	SK3100	RT-218	ECG519	1N4148	WEP925	
CD26	1S1588	151-051-9-001	GE-514	PTC214	HEPR0602	RE 52	SK3100	RT-218	ECG519	1N4148	WEP925	
CD27	1S1588	151-051-9-001	GE-514	PTC214	HEPR0602	RE 52	SK3100	RT-218	ECG519	1N4148	WEP925	
CD28	1S1588	151-051-9-001	GE-514	PTC214	HEPR0602	RE 52	SK3100	RT-218	ECG519	1N4148	WEP925	
CD29	1S1588	151-051-9-001	GE-514	PTC214	HEPR0602	RE 52	SK3100	RT-218	ECG519	1N4148	WEP925	
CD30	1S1588	151-051-9-001	GE-514	PTC214	HEPR0602	RE 52	SK3100	RT-218	ECG519	1N4148	WEP925	
CD31	1S1588	151-051-9-001	GE-514	PTC214	HEPR0602	RE 52	SK3100	RT-218	ECG519	1N4148	WEP925	
CD34	1S1885	151-030-9-005	GE-504A	PTC201	HEPR0052	RE 49	SK3030	RT-213	ECG116	1N4004	WEP156	212-61
CD35	1S1885	151-030-9-005	GE-504A	PTC201	HEPR0052	RE 49	SK3030	RT-213	ECG116	1N4004	WEP156	212-61
CD36	1S1885	151-030-9-005	GE-504A	PTC201	HEPR0052	RE 49	SK3030	RT-213	ECG116	1N4004	WEP156	212-61
CD37	1S1588	151-051-9-001	GE-514	PTC214	HEPR0602	RE 52	SK3100	RT-218	ECG519	1N4148	WEP925	
CD39	1S1588	151-051-9-001	GE-514	PTC214	HEPR0602	RE 52	SK3100	RT-218	ECG519	1N4148	WEP925	
CD40	1S1588	151-051-9-001	GE-514	PTC214	HEPR0602	RE 52	SK3100	RT-218	ECG519	1N4148	WEP925	
CD41	1S1588	151-051-9-001	GE-514	PTC214	HEPR0602	RE 52	SK3100	RT-218	ECG519	1N4148	WEP925	
CD42	1S1588	151-051-9-001	GE-514	PTC214	HEPR0602	RE 52	SK3100	RT-218	ECG519	1N4148	WEP925	
CD43	1S1588	151-051-9-001	GE-514	PTC214	HEPR0602	RE 52	SK3100	RT-218	ECG519	1N4148	WEP925	
CD44	1S1588	151-051-9-001	GE-514	PTC214	HEPR0602	RE 52	SK3100	RT-218	ECG519	1N4148	WEP925	
CD45	1S1588	151-051-9-001	GE-514	PTC214	HEPR0602	RE 52	SK3100	RT-218	ECG519	1N4148	WEP925	
CD46	1S1588	151-051-9-001	GE-514	PTC214	HEPR0602	RE 52	SK3100	RT-218	ECG519	1N4148	WEP925	
CD47	02Z6.2A	152-047-9-001	GEZD-6.2	ZM6.2A	HEPZ0214A	RE 109	SK3058	RT-237	ECG5013	1N4735A	WEP1414	ZEN-500
CD48	1S1588	151-051-9-001	GE-514	PTC214	HEPR0602	RE 52	SK3100	RT-218	ECG519	1N4148	WEP925	
~~CD49~~	~~1S1885~~	~~151-030-9-005~~	~~GE-504A~~	~~PTC201~~	~~HEPR0052~~	~~RE 49~~	~~SK3030~~	~~RT-213~~	~~ECG116~~	~~1N4004~~	~~WEP156~~	~~212-61~~
CD50a	1S1588	151-051-9-001	GE-514	PTC214	HEPR0602	RE 52	SK3100	RT-218	ECG519	1N4148	WEP925	
CD50b	1S1588	151-051-9-001	GE-514	PTC214	HEPR0602	RE 52	SK3100	RT-218	ECG519	1N4148	WEP925	
CD50c	1S1588	151-051-9-001	GE-514	PTC214	HEPR0602	RE 52	SK3100	RT-218	ECG519	1N4148	WEP925	
CD51	1S1588	151-051-9-001	GE-514	PTC214	HEPR0602	RE 52	SK3100	RT-218	ECG519	1N4148	WEP925	
CD52	1S1588	151-051-9-001	GE-514	PTC214	HEPR0602	RE 52	SK3100	RT-218	ECG519	1N4148	WEP925	
CD33	1S1588	151-051-9-001	GE-514	PTC214	HEPR0602	RE 52	SK3100	RT-218	ECG519	1N4148	WEP925	
CD54	1S1588	151-051-9-001	GE-514	PTC214	HEPR0602	RE 52	SK3100	RT-218	ECG519	1N4148	WEP925	
CD55	1S1588	151-051-9-001	GE-514	PTC214	HEPR0602	RE 52	SK3100	RT-218	ECG519	1N4148	WEP925	
CD56	1S1588	151-051-9-001	GE-514	PTC214	HEPR0602	RE 52	SK3100	RT-218	ECG519	1N4148	WEP925	
CD57	1S1588	151-051-9-001	GE-514	PTC214	HEPR0602	RE 52	SK3100	RT-218	ECG519	1N4148	WEP925	
CD58	1S1588	151-051-9-001	GE-514	PTC214	HEPR0602	RE 52	SK3100	RT-218	ECG519	1N4148	WEP925	
CD60	1S1885	151-030-9-005	GE-504A	PTC201	HEPR0052	RE 49	SK3030	RT-213	ECG116	1N4004	WEP156	212-61
CD61	1S1885	151-030-9-005	GE-504A	PTC201	HEPR0052	RE 49	SK3030	RT-213	ECG116	1N4004	WEP156	212-61
CD62	1S1588	151-051-9-001	GE-514	PTC214	HEPR0602	RE 52	SK3100	RT-218	ECG519	1N4148	WEP925	
CD63	1S1885	151-030-9-005	GE-300	PTC214	HEPR0602	RE 52	SK3100	RT-218	ECG177		WEP1062	
	1S1555		GE-300	PTC214	HEPR0602	RE 52	SK3100	RT-218	ECG177		WEP1062	
CD64	1S1588	151-051-9-001	GE-514	PTC214	HEPR0602	RE 52	SK3100	RT-218	ECG519	1N4148	WEP925	
CD301	1S2789				HEPR2502				ECG612			ZEN-452
CD302	1S2789				HEPR2502				ECG612			ZEN-452
CD303	02Z6.2A	152-047-9-001	GEZD-6.2	ZM6.2A	HEPZ0214A	RE 109	SK3058	RT-237	ECG5013	1N4735A	WEP1414	ZEN-500
CD308	02Z6.2A	152-047-9-001	GEZD-6.2	ZM6.2A	HEPZ0215A	RE 109	SK3058	RT-237	ECG5013	1N4735A	WEP1414	ZEN-500
CD304	1S1588	151-051-9-001	GE-514	PTC214	HEPR0602	RE 52	SK3100	RT-218	ECG519	1N4148	WEP925	
CD305	1S1588	151-051-9-001	GE-514	PTC214	HEPR0602	RE 52	SK3100	RT-218	ECG519	1N4148	WEP925	
CD306	1S1658	151-030-9-003	GE-300		HEPR2503			RT-262	ECG614		WEP200	ZEN-453
CD307	1S1588	151-051-9-001	GE-514	PTC214	HEPR0602	RE 52	SK3100	RT-218	ECG519	1N4148	WEP925	
CD308	02Z6.2A	152-047-9-001	GEZD-6.2	ZM6.2A	HEPZ0214A	RE 109	SK3058	RT-237	ECG5013	1N4735A	WEP1414	ZEN-500
CD309	02Z6.2A	152-047-9-001	GEZD-6.2	ZM6.2A	HEPZ0214A	RE 109	SK3058	RT-237	ECG5013	1N4735A	WEP1414	ZEN-500
CD310	1S1588	151-051-9-001	GE-514	PTC214	HEPR0602	RE 52	SK3100	RT-218	ECG519	1N4148	WEP925	
CD312	1S1588	151-051-9-001	GE-514	PTC214	HEPR0602	RE 52	SK3100	RT-218	ECG519	1N4148	WEP925	
CD313	1S1588	151-051-9-001	GE-514	PTC214	HEPR0602	RE 52	SK3100	RT-218	ECG519	1N4148	WEP925	
CD314	1S1588	151-051-9-001	GE-514	PTC214	HEPR0602	RE 52	SK3100	RT-218	ECG519	1N4148	WEP925	
CD315	1S1588	151-051-9-001	GE-514	PTC214	HEPR0602	RE 52	SK3100	RT-218	ECG519	1N4148	WEP925	
IC1	SV10052	307-107-9-002										
IC2	TA7064P	307-107-9-001										
IC3	TA7205P	307-107-9-003	GEIC-179	PTC780	TA7205P	RE 357-IC	SK3231	TVCM-81	ECG1155	TA7205P	WEP949	
IC301	TC5081P	307-107-9-004							ECG1208			
IC302	TC5082P	307-107-9-005							ECG1197			
IC303	TC5081P	307-107-9-004							ECG1208			
IC304	TC5082P	307-107-9-005							ECG1197			
IC304	TC5080P	307-107-9-006							ECG1207			
Q2	3SK40	182-049-001										
	3SK44											
Q3	2SC784R	176-056-9-003	GE-60*	PTC132*	2SC784	RE 28*	SK3018*	RT-187	ECG229*	2SC784	WEP784	ZEN-104
	2SC784		GE-60*	PTC132*	2SC784	RE 28*	SK3018*	RT-187	ECG229*	2SC784	WEP784	ZEN-104
Q4	2SC380-0	176-082-9-001	GE-61*	PTC136*	2SC380	RE 9	SK3018*	RT-107A	ECG107	2SC380	WEP380	ZEN-127
	2SC380		GE-61*	PTC136*	2SC380	RE 9	SK3018*	RT-107A	ECG107	2SC380	WEP380	ZEN-127
Q5	2SC380-0	176-082-9-001	GE-61*	PTC136*	2SC380	RE 9	SK3018*	RT-107A	ECG107	2SC380	WEP380	ZEN-127
	2SC380		GE-61*	PTC136*	2SC380	RE 9	SK3018*	RT-107A	ECG107	2SC380	WEP380	ZEN-127
Q6	2SC735-0	176-031-9-001	GE-210*	PTC123*	2SC735	RE 13*	SK3122	RT-308*	ECG289	2SC735	WEP735A	ZEN-127
	2SC735		GE-210*	PTC123*	2SC735	RE 13*	SK3122	RT-308*	ECG289	2SC735	WEP735A	ZEN-127

PARTS LIST AND DESCRIPTION (CONTINUED)

(When ordering parts, state Model, Part Number, and Description.)

SEMICONDUCTORS (Select replacement transistor for best results) (cont)

ITEM No.	TYPE No.	MFGR. PART No.	REPLACEMENT DATA									
			GENERAL ELECTRIC PART No.	MALLORY PART No.	MOTOROLA PART No.	RAYTHEON PART No.	RCA PART No.	SPRAGUE PART No.	SYLVANIA PART No.	THORDARSON PART No.	WORKMAN PART No.	ZENITH PART No.
Q7	2SC372Y	176-042-9-003	GE-61*	PTC121*	2SC372	RE 13*	SK3122	RT-308	ECG123A*	2SC372	WEP372	ZEN-114
	2SC372		GE-61*	PTC121*	2SC372	RE 13*	SK3122	RT-308	ECG123A*	2SC372	WEP372	ZEN-114
Q8	2SC372Y	176-042-9-003	GE-61*	PTC121*	2SC372	RE 13*	SK3122	RT-308	ECG123A*	2SC372	WEP372	ZEN-114
	2SC372		GE-61*	PTC121*	2SC372	RE 13*	SK3122	RT-308	ECG123A*	2SC372	WEP372	ZEN-114
Q9a	2SC372Y	176-042-9-003	GE-61*	PTC121*	2SC372	RE 13*	SK3122	RT-308	ECG123A*	2SC372	WEP372	ZEN-114
	2SC372		GE-61*	PTC121*	2SC372	RE 13*	SK3122	RT-308	ECG123A*	2SC372	WEP372	ZEN-114
Q9b	2SC372Y	176-042-9-003	GE-61*	PTC121*	2SC372	RE 13*	SK3122	RT-308	ECG123A*	2SC372	WEP372	ZEN-114
	2SC372		GE-61*	PTC121*	2SC372	RE 13*	SK3122	RT-308	ECG123A*	2SC372	WEP372	ZEN-114
Q10	2SC372Y	176-042-9-003	GE-61*	PTC121*	2SC372	RE 13*	SK3122	RT-308	ECG123A*	2SC372	WEP372	ZEN-114
	2SC372		GE-61*	PTC121*	2SC372	RE 13*	SK3122	RT-308	ECG123A*	2SC372	WEP372	ZEN-114
Q11	2SC1166-Y	176-056-9-005	GE-81*	PTC143	2SC1166	RE 210	SK3122	RT-141	ECG297	2SC1166	WEP914	
	2SC1166		GE-81*	PTC143	2SC1166	RE 210	SK3122	RT-141	ECG297	2SC1166	WEP914	
Q12	2SC1173	172-026-9-001	GE-215	PTC186	2SC1173	RE 201	SK3197	RT-160	ECG236	2SC1173	WEP840	
Q13	2SC1678	172-028-9-001	GE-322	PTC186		RE 203	SK3197	RT-146	ECG235	2SC1306		
Q14	2SC1173	172-026-9-001	GE-268	PTC123*	2SC1213	RE 17*	SK3024*	RT-134	ECG289		WEP910	121-1014
Q15	2SC1307	176-044-9-001(12)	GE-216	PTC186		RE 201	SK3197	RT-158	ECG236		WEP840	
Q16	2SC372Y	176-042-9-003	GE-61*	PTC121*	2SC372	RE 13*	SK3122	RT-308	ECG123A*	2SC372	WEP372	ZEN-114
	2SC372		GE-61*	PTC121*	2SC372	RE 13*	SK3122	RT-308	ECG123A*	2SC372	WEP372	ZEN-114
Q17	2SC372Y	176-042-9-003	GE-61*	PTC121*	2SC372	RE 13*	SK3122	RT-308	ECG123A*	2SC372	WEP372	ZEN-114
	2SC372		GE-61*	PTC121*	2SC372	RE 13*	SK3122	RT-308	ECG123A*	2SC372	WEP372	ZEN-114
Q18	2SC372Y	176-042-9-003	GE-61*	PTC121*	2SC372	RE 13*	SK3122	RT-308	ECG123A*	2SC372	WEP372	ZEN-114
	2SC372		GE-61*	PTC121*	2SC372	RE 13*	SK3122	RT-308	ECG123A*	2SC372	WEP372	ZEN-114
Q19	2SC372Y	176-042-9-003	GE-61*	PTC121*	2SC372	RE 13*	SK3122	RT-308	ECG123A*	2SC372	WEP372	ZEN-114
	2SC372		GE-61*	PTC121*	2SC372	RE 13*	SK3122	RT-308	ECG123A*	2SC372	WEP372	ZEN-114
Q20	2SC732BL	176-056-9-006	GE-62	PTC139*	2SC732	RE 192	SK3122	RT-302	ECG199	2SC732	WEP66	ZEN-128
	2SC732		GE-62	PTC139*	2SC732	RE 192	SK3122	RT-302	ECG199	2SC732	WEP66	ZEN-128
Q21	2SA495-O	177-019-9-003	GE-221*	PTC103*	2SA495	RE 26*	SK3114	RT-303	ECG159*	2SA495	WEP495	ZEN-106
	2SA495		GE-221*	PTC103*	2SA495	RE 26*	SK3114	RT-303	ECG159*	2SA495	WEP495	ZEN-106
Q22	2SA495-O	177-019-9-003	GE-221*	PTC103*	2SA495	RE 26*	SK3114	RT-303	ECG159*	2SA495	WEP495	ZEN-106
	2SA495		GE-221*	PTC103*	2SA495	RE 26*	SK3114	RT-303	ECG159*	2SA495	WEP495	ZEN-106
Q23	2SC372Y	176-042-9-003	GE-61*	PTC121*	2SC372	RE 13*	SK3122	RT-308	ECG123A*	2SC372	WEP372	ZEN-114
	2SC372		GE-61*	PTC121*	2SC372	RE 13*	SK3122	RT-308	ECG123A*	2SC372	WEP372	ZEN-114
Q24	2SA950Y	177-032-9-001	GE-244	PTC144	HEPS3032	RE 18	SK3025	RT-115	ECG129		WEP242	
	2SA950		GE-244	PTC144	HEPS3032	RE 18	SK3025	RT-115	ECG129		WEP242	
Q25	2SA950Y	177-032-9-001	GE-244	PTC144	HEPS3032	RE 18	SK3025	RT-115	ECG129		WEP242	
	2SA950		GE-244	PTC144	HEPS3032	RE 18	SK3025	RT-115	ECG129		WEP242	
Q27	2SB435Y	175-010-9-001	GE-69	PTC162		RE 22	SK3083	RT-155	ECG153			
	2SB435											
Q28	2SC372Y	176-042-9-003	GE-61*	PTC121*	2SC372	RE 13*	SK3122	RT-308	ECG123A*	2SC372	WEP372	ZEN-114
	2SC372		GE-61*	PTC121*	2SC372	RE 13*	SK3122	RT-308	ECG123A*	2SC372	WEP372	ZEN-114
Q301	2SK19-GR	182-029-9-001	GE-FET-2	PTC161	HEPF0021	RE 45	SK3116	RT-175	ECG312		WEP920	ZEN-123
	2SK19		GE-FET-2	PTC161	HEPF0021	RE 45	SK3116	RT-175	ECG312		WEP920	ZEN-123
Q302	2SC19GR	182-029-9-001	GE-FET-2	PTC161	HEPF0021	RE 45	SK3116	RT-175	ECG312		WEP920	ZEN-123
	2SK19		GE-FET-2	PTC161	HEPF0021	RE 45	SK3116	RT-175	ECG312		WEP920	ZEN-123
Q303	2SK19GR	182-029-9-001	GE-FET-2	PTC161	HEPF0021	RE 45	SK3116	RT-175	ECG312		WEP920	ZEN-123
	2SK19		GE-FET-2	PTC161	HEPF0021	RE 45	SK3116	RT-175	ECG312		WEP920	ZEN-123
Q304	2SC372Y	176-042-9-003	GE-61*	PTC121*	2SC372	RE 13*	SK3122	RT-308	ECG123A*	2SC372	WEP372	ZEN-114
	2SC372		GE-61*	PTC121*	2SC372	RE 13*	SK3122	RT-308	ECG123A*	2SC372	WEP372	ZEN-114
Q305	2SC387A	176-044-9-003	GE-214	PTC132*	HEPS0020*	RE 10*	SK3039*	RT-134	ECG108*	2SC717*	WEP56*	ZEN-104
	2SC387		GE-214	PTC132*	HEPS0020*	RE 10*	SK3039*	RT-134	ECG108*	2SC717*	WEP56*	ZEN-104
Q306	2SA495-O	177-019-9-003	GE-221*	PTC103*	2SA495	RE 26*	SK3114	RT-303	ECG159*	2SA495	WEP495	ZEN-106
	2SA495		GE-221*	PTC103*	2SA495	RE 26*	SK3114	RT-303	ECG159*	2SA495	WEP495	ZEN-106
Q307	2SC372Y	176-042-9-003	GE-61*	PTC121*	2SC372	RE 13*	SK3122	RT-308	ECG123A*	2SC372	WEP372	ZEN-114
	2SC372		GE-61*	PTC121*	2SC372	RE 13*	SK3122	RT-308	ECG123A*	2SC372	WEP372	ZEN-114
Q308	2SC372Y	176-042-9-003	GE-61*	PTC121*	2SC372	RE 13*	SK3122	RT-308	ECG123A*	2SC372	WEP372	ZEN-114
	2SC372		GE-61*	PTC121*	2SC372	RE 13*	SK3122	RT-308	ECG123A*	2SC372	WEP372	ZEN-114
Q309	2SC387A	176-044-9-003	GE-214	PTC132*	HEPS0020*	RE 10*	SK3039*	RT-134	ECG108*	2SC717*	WEP56*	ZEN-104
	2SC387		GE-214	PTC132*	HEPS0020*	RE 10*	SK3039*	RT-134	ECG108*	2SC717*	WEP56*	ZEN-104
Q310	2SC372Y	176-042-9-003	GE-61*	PTC121*	2SC372	RE 13*	SK3122	RT-308	ECG123A*	2SC372	WEP372	ZEN-114
	2SC372		GE-61*	PTC121*	2SC372	RE 13*	SK3122	RT-308	ECG123A*	2SC372	WEP372	ZEN-114
Q311	2SC372Y	176-042-9-003	GE-61*	PTC121*	2SC372	RE 13*	SK3122	RT-308	ECG123A*	2SC372	WEP372	ZEN-114
	2SC372		GE-61*	PTC121*	2SC372	RE 13*	SK3122	RT-308	ECG123A*	2SC372	WEP372	ZEN-114
Q312	2SC372Y	176-042-9-003	GE-61*	PTC121*	2SC372	RE 13*	SK3122	RT-308	ECG123A*	2SC372	WEP372	ZEN-114
	2SC372		GE-61*	PTC121*	2SC372	RE 13*	SK3122	RT-308	ECG123A*	2SC372	WEP372	ZEN-114
Q314	2SC372Y	176-042-9-003	GE-61*	PTC121*	2SC372	RE 13*	SK3122	RT-308	ECG123A*	2SC372	WEP372	ZEN-114
	2SC372		GE-61*	PTC121*	2SC372	RE 13*	SK3122	RT-308	ECG123A*	2SC372	WEP372	ZEN-114
Q315	2SC372Y	176-042-9-003	GE-61*	PTC121*	2SC372	RE 13*	SK3122	RT-308	ECG123A*	2SC372	WEP372	ZEN-114
	2SC372		GE-61*	PTC121*	2SC372	RE 13*	SK3122	RT-308	ECG123A*	2SC372	WEP372	ZEN-114
Q316	2SC372Y	176-042-9-003	GE-61*	PTC121*	2SC372	RE 13*	SK3122	RT-308	ECG123A*	2SC372	WEP372	ZEN-114
	2SC372		GE-61*	PTC121*	2SC372	RE 13*	SK3122	RT-308	ECG123A*	2SC372	WEP372	ZEN-114
Q317	2SC372Y	172-042-9-003	GE-61*	PTC121*	2SC372	RE 13*	SK3122	RT-308	ECG123A*	2SC372	WEP372	ZEN-114
	2SC372		GE-61*	PTC121*	2SC372	RE 13*	SK3122	RT-308	ECG123A*	2SC372	WEP372	ZEN-114
Q318	2SD235-O	172-031-9-003	GE-66		2SD235	RE 21	SK3054	RT-197	ECG152	2SD235	WEP745	
	2SD235T		GE-66		2SD235	RE 21	SK3054	RT-197	ECG152	2SD235	WEP745	
	2SD235											

(6) Matched pair.
(7) Two required - select matched pair.
* Lead configuration may vary from original.
(12) 25 WATTS @ 8 AMPS.

ELECTROLYTIC CAPACITORS

ITEM No.	RATING	REPLACEMENT DATA				
		MFGR. PART No.	CORNELL-DUBILIER PART No.	MALLORY PART No.	SPRAGUE PART No.	
					Q-LINE	GENERAL LINE
C16	.33 35V			TDC334M050EL	QDT1-14	SD50-R339
C30	33 16V	022-074-9-005	PC30-25	VTT33D25	QV1-63	EV-1325
C33	3.3 50V	027-076-9-002	PC5-50	VTT3R3A50	QV1-25	EV-1618
C35	3.3 50V	027-076-9-002	PC5-50	VTT3R3A50	QV1-25	EV-1618
C36	10 16V	022-076-9-003	PC10-25	VTT10B25	QV1-41	EV-1222
C41	1 50V	022-076-9-001	PC1-50	VTT1A50	QV1-11	EV-1615
C46	1 50V	022-076-9-001	PC1-50	VTT1A50	QV1-11	EV-1615
C47	10 16V	022-076-9-003	PC10-25	VTT10B25	QV1-41	EV-1222
C53	10 16V	022-076-9-003	PC10-25	VTT10B25	QV1-41	EV-1222

PARTS LIST AND DESCRIPTION (CONTINUED)

(When ordering parts, state Model, Part Number, and Description.)

ELECTROLYTIC CAPACITORS (cont)

ITEM No.	RATING	REPLACEMENT DATA				
		MFGR. PART No.	CORNELL-DUBILIER PART No.	MALLORY PART No.	SPRAGUE PART No.	
					Q-LINE	GENERAL LINE
C68	1 50V		PC1-50	VTT1A50	QV1-11	EV-1615
C77	10 16V	022-076-9-003	PC10-25	VTT10B25	QV1-41	EV-1222
C83b	10 16V	022-076-9-003	PC10-25	VTT10B25	QV1-41	EV-1222
C90	1 50V	022-076-9-001	PC1-50	VTT1A50	QV1-11	EV-1615
C92	1 50V	022-076-9-001	PC1-50	VTT1A50	QV1-11	EV-1615
C93	3.3 50V	027-076-9-002	PC5-50	VTT3R3A50	QV1-25	EV-1618
C94	10 16V		WBR10-25	TT15X10	QE1-177	TVA-1145
C98	33 16V	022-074-9-005	PC30-25	VTT33D25	QV1-63	EV-1325
C104	3.3 16V	027-020-9-001		TDC335M035FL		SD35-3R39
C108	10 16V	022-076-9-003	PC10-25	VTT10B25	QV1-41	EV-1222
C109	33 16V	022-074-9-005	PC30-25	VTT33D25	QV1-63	EV-1325
C113	1000 25V	022-150-9-002	WBR1000-25	VTT1000M25	QV1-185	EV-1360
C114	1 50V	022-076-9-001	PC1-50	VTT1A50	QV1-11	EV-1615
C117	10 16V	022-076-9-003	PC10-25	VTT10B25	QV1-41	EV-1222
C122	10 16V	022-076-9-003	PC10-25	VTT10B25	QV1-41	EV-1222
C123	100 10V	022-074-9-010	PC100-10	VTT100E10	QV1-93	EV-1130
C124	1000 16V	022-150-9-003	PC1000-16	VTT1000L16	QV1-183	EV-1260
C125	1000 16V	022-150-9-003	PC1000-16	VTT1000L16	QV1-183	EV-1260
C127	1 50V	022-076-9-001	PC1-50	VTT1A50	QV1-11	EV-1615
C128	1 50V	022-076-9-001	PC1-50	VTT1A50	QV1-11	EV-1615
C130	10 16V	022-076-9-003	PC10-25	VTT10B25	QV1-41	EV-1222
C152	10 16V		PC10-25	VTT10B25	QV1-41	EV-1222
C165	10 16V	022-076-9-003	PC10-25	VTT10B25	QV1-41	EV-1222
C200	1 50V	022-076-9-001	PC1-50	VTT1A50	QV1-11	EV-1615
C201	100 16V		PC100-16	VTT100F16	QV1-95	EV-1230
C301	10 16V	022-076-9-003	PC10-25	VTT10B25	QV1-41	EV-1222
C306	10 16V	022-076-9-003	PC10-25	VTT10B25	QV1-41	EV-1222
C338	10 16V	022-076-9-003	PC10-25	VTT10B25	QV1-41	EV-1222
C339a	3.3 16V	027-020-9-001		TDC335M035FL		SD35-3R39
C339b	3.3 16V	027-020-9-001		TDC335M035FL		SD35-3R39
C343	100 10V	022-074-9-010	PC100-10	VTT100E10	QV1-93	EV-1130
C345	.22 35V			TDC224M050EL	QDT1-10	SD50-R229
C350	220 10V	022-076-9-010	PC250-10	VTT220F10	QV1-115	EV-1140
C357	10 16V		PC10-25	VTT10B25	QV1-41	EV-1222
C361	10 16V	022-076-9-003	PC10-25	VTT10B25	QV1-41	EV-1222
C365	.22	027-028-9-001				

CAPACITORS

ITEM No.	RATING	MFGR. PART No.	REPLACEMENT DATA				
			CENTRALAB PART No.	CORNELL-DUBILIER PART No.	MALLORY PART No.	SPRAGUE PART No.	
						Q-LINE	GENERAL LINE
C1	.0022				GP222		10TS-D22
C2	470		DD-471	GP470	GP347		10TS-T47
C3	470		DD-471	GP470	GP347		10TS-T47
C4	.0022				GP222		10TS-D22
C5	100		DTZ-100	NPO100	CNO310		10TCC-T10
C6	220 5%		DTZ-220				10TCC-T22
C7	330 5%		DD-331	GP330	GP333		10TS-T33
C8	220 5%		DTZ-220				10TCC-T22
C9	10		DTZ-10	NPO10	CNO410		10TCC-Q10
C10	.0022				GP222		10TS-D22
C11	.033	025-060-9-003				QFT2-149	1FT-S33
C12	22 N220	020-157-9-002			*		10TCR-Q22
C13	22		DTZ-22	NPO22	CNO422		10TCC-Q22
C14	33		DTZ-33	NPO33	CNO433		10TCC-Q33
C15	.0022				GP222		10TS-D22
C17	.0022				GP222		10TS-D22
C18	1				CNO510		10TCC-V10
C19	.0022				GP222		10TS-D22
C20	.0022				GP222		10TS-D22
C21	470		DD-471	GP470	GP347		10TS-T47
C22	.0047		DD-472	GP4700	GP247		5GA-D47
C23	.0047		DD-472	GP4700	GP247		5GA-D47
C24	.0047		DD-472	GP4700	GP247		5GA-D47
C25	.01	025-060-9-001				QFT2-91	1FT-S10
C26	.01	025-060-9-001				QFT2-91	1FT-S10
C27	.0047		DD-472	GP4700	GP247		5GA-D47
C28	.0047		DD-472	GP4700	GP247		5GA-D47
C29	.0047		DD-472	GP4700	GP247		5GA-D47
C31	.01 50V	025-060-9-001				QFT2-91	1FT-S10
C32	.0047		DD-472	GP4700	GP247		5GA-D47
C34	.01	025-060-9-001				QFT2-91	1FT-S10
C37	.0047		DD-472	GP4700	GP247		5GA-D47
C39	22		DTZ-22	NPO22	CNO422		10TCC-Q22
C40	.1 25V	033-017-9-001					
C44	3 NPO		DTZ-3R3	NPO3P3	CNO533		10TCC-V33

PARTS LIST AND DESCRIPTION (CONTINUED)

(When ordering parts, state Model, Part Number, and Description.)

CAPACITORS (cont)

ITEM No.	RATING	MFGR. PART No.	REPLACEMENT DATA				
			CENTRALAB PART No.	CORNELL-DUBILIER PART No.	MALLORY PART No.	SPRAGUE PART No.	
						Q-LINE	GENERAL LINE
C45	5		DTZ-4R7	NP04P7	CN0547		10TCC-V47
C48	.01 50V	025-060-9-001				QFT2-91	1FT-S10
C49	.01 50V	025-060-9-001				QFT2-91	1FT-S10
C50	.0022				GP222		10TS-D22
C51	.0047		DD-472	GP4700	GP247		5GA-D47
C52	.01	025-060-9-001				QFT2-91	1FT-S10
C54	.0022				GP222		10TS-D22
C55	.0047		DD-472	GP4700	GP247		5GA-D47
C56	20	028-026-9-001					
C57	10 N470	020-170-9-001			*		10TCT-Q10
C58	3		DTZ-3R3	NP03P3	CN0533		10TCC-V33
C59	470		DD-471	GP470	GP347		10TS-T47
C60	.0047		DD-472	GP4700	GP247		5GA-D47
C61	.0047		DD-472	GP4700	GP247		5GA-D47
C62	2		DD-471	GP470	GP347		10TS-T47
C63	1				CN0510		10TCC-V10
C64	1				CN0510		10TCC-V10
C65	470		DD-471	GP470	GP347		10TS-T47
C66	.0047		DD-472	GP4700	GP247		5GA-D47
C67	.0047		DD-472	GP4700	GP247		5GA-D47
C69	100		DTZ-100	NP0100	CN0310		10TCC-T10
C70	.0047		DD-472	GP4700	GP247		5GA-D47
C71	.033 50V	025-060-9-003				QFT2-149	1FT-S33
C72	330		DD-331	GP330	GP333		10TS-T33
C73	.0047		DD-472	GP4700	GP247		5GA-D47
C74	.033	025-060-9-003				QFT2-91	1FT-S33
C75	.0047		DD-472	GP4700	GP247		5GA-D47
C76	100		DTZ-100	NP0100	CN0310		10TCC-T10
C78	.0047		DD-472	GP4700	GP247		5GA-D47
C79	330 5%		DD-331	GP330	GP333		10TS-T33
C81	.0047		DD-472	GP4700	GP247		5GA-D47
C82	20	028-026-9-001					
C83	22 N220	020-157-9-002			*		10TCR-Q25
C84	150		DTZ-150		CN0315		10TCC-T15
C85	100		DTZ-100	NP0100	CN0310		10TCC-T10
C86	10		DTZ-10	NP010	CN0410		10TCC-Q10
C87	.0047		DD-472	GP4700	GP247		5GA-D47
C88	.0022				GP222		10TS-D22
C89	.033 50V	025-060-9-003				QFT2-149	1FT-S33
C91	.0047		DD-472	GP4700	GP247		5GA-D47
C95	.0047		DD-472	GP4700	GP247		5GA-D47
C96	.0047		DD-472	GP4700	GP247		5GA-D47
C97	.0047 10%		DD-472	GP4700	GP247		5GA-D47
C99	.0047		DD-472	GP4700	GP247		5GA-D47
C100	.01 50V	025-060-9-001				QFT2-91	1FT-S10
C101	.01 50V	025-060-9-001				QFT2-91	1FT-S10
C102	.022	025-071-9-002				QFT2-127	1FT-S22
C103	.0047		DD-472	GP4700	GP247		5GA-D47
C105	100		DTZ-100	NP0100	CN0310		10TCC-T10
C106	.1		CK-104		MAG5001		
C107	.1		CK-104		MAG5001		
C110	100		DTZ-100	NP0100	CN0310		10TCC-T10
C111	.1		CK-104		MAG5001		
C112	.0047		DD-472	GP4700	GP247		5GA-D47
C115	.1		CK-104		MAG5001		
C116	.0047		DD-472	GP4700	GP247		5GA-D47
C118	.01 50V	025-060-9-001				QFT2-91	1FT-S10
C119	470		DD-471	GP470	GP347		10TS-T47
C120	.0047		DD-472	GP4700	GP247		5GA-D47
C121	.033 50V	025-060-9-003				QFT2-149	1FT-S33
C126	.0047		DD-472	GP4700	GP247		5GA-D47
C131a	.0047		DD-472	GP4700	GP247		5GA-D47
C131b	.0047		DD-472	GP4700	GP247		5GA-D47
C132	.0047		DD-472	GP4700	GP247		5GA-D47
C133	.0047		DD-472	GP4700	GP247		5GA-D47
C135	.0047		DD-472	GP4700	GP247		5GA-D47
C136	.0047		DD-472	GP4700	GP247		5GA-D47
C137	.0047		DD-472	GP4700	GP247		5GA-D47
C138	.0047		DD-472	GP4700	GP247		5GA-D47
C139	.0047		DD-472	GP4700	GP247		5GA-D47
C140	.0047		DD-472	GP4700	GP247		5GA-D47
C141	100		DTZ-100	NP0100	CN0310		10TCC-T10
C142	100		DTZ-100	NP0100	CN0310		10TCC-T10
C143	.0047		DD-472	GP4700	GP247		5GA-D47
C144	.0047	020-088-9-008					
C145	.0047	020-088-9-008					

PARTS LIST AND DESCRIPTION (CONTINUED)

(When ordering parts, state Model, Part Number, and Description.)

CAPACITORS (cont)

ITEM No.	RATING	MFGR. PART No.	REPLACEMENT DATA				
			CENTRALAB PART No.	CORNELL-DUBILIER PART No.	MALLORY PART No.	SPRAGUE PART No.	
						Q-LINE	GENERAL LINE
C147	.0047	020-088-9-008					
C151	.0022				GP222		10TS-D22
C153	.0047		DD-472	GP4700	GP247		5GA-D47
C154	.0047		DD-472	GP4700	GP247		5GA-D47
C155	.033		UK50-333		MAG50133		
C157	.033 50V	025-060-9-003					
C158	.0047		DD-472	GP4700	GP247		5GA-D47
C159	.0047		DD-472	GP4700	GP247		5GA-D47
C160	.0047		DD-472	GP4700	GP247		5GA-D47
C163	.0047		DD-472	GP4700	GP247		5GA-D47
C164	.033					QFT2-149	1FT-S33
C166	.033 50V	025-060-9-003				QFT2-149	1FT-S33
C167	.0047		DD-472	GP4700	GP247		5GA-D47
C168	.01		UK50-103		MAG5011		
	.0047	020-088-9-008					
C169	.0047		DD-472	GP4700	GP247		5GA-D47
C173	.0047	020-088-9-008					
C174	.0047		DD-472	GP4700	GP247		5GA-D47
C175	.0047	020-088-9-008				QFT2-63	1FT-D47
C176	.0047						
C177	.033						
C180	.0047	020-088-9-008					
C182	470	020-097-9-022					
C185	.0047		DD-472	GP4700	GP247		5GA-D47
C186	.0047		DD-472	GP4700	GP247		5GA-D47
C187	.0047		DD-472	GP4700	GP247		5GA-D47
C195	.0047	020-088-9-008					
C196	.0047		DD-472	GP4700	GP247		5GA-D47
C197	.0047		DD-472	GP4700	GP247		5GA-D47
C199	.0047		DD-472	GP4700	GP247		5GA-D47
C302	15 N220				*		10TCR-Q15
C303	10 N750			N10	CN7410		10TCU-Q10
C304	22 N750			N22	CN7422		10TCU-Q22
C305	2		DTZ-2R2	NP02P2	CN0522		10TCC-V22
C307	1				CN0510		10TCC-V10
C308	10 N220	020-076-9-003			*		10TCR-Q10
C309	33 N750			N33			10TCU-Q33
C310	100 N750			N100			10TCU-T10
C311	10		DTZ-10	NP010	CN0410		10TCC-Q10
C314	.033	025-060-9-003				QFT2-149	1FT-S33
C315	.0047	020-088-9-008					
C316	.0047		DD-472	GP4700	GP247		5GA-D47
C318	47 N220	020-088-9-002			*		10TCR-Q47
C319	.0047		DD-472	GP4700	GP247		5GA-D47
C320	47 N220	020-088-9-002			*		10TCR-Q47
C321	47 N220	020-088-9-002			*		10TCR-Q47
C322	10		DTZ-10	NP010	CN0410		10TCC-Q10
C323	.0047		DD-472	GP4700	GP247		5GA-D47
C324	47		DTZ-47	NP047	CN0447		10TCC-Q47
C325	.0022				GP222		10TS-D22
C326	220		DTZ-220				10TCC-T22
C327	.1	025-060-9-004				QFT2-215	1FT-P10
C328	22		DTZ-22	NP022	CN0422		10TCC-Q22
C329	10		DTZ-10	NP010	CN0410		10TCC-Q10
C330	.0047		DD-472	GP4700	GP247		5GA-D47
C331	2		DTZ-2R2	NP02P2	CN0522		10TCC-V22
C332	.0022				GP222		10TS-D22
C333	.0047		DD-472	GP4700	GP247		5GA-D47
C334	220		DTZ-220				10TCC-T22
C335	47 N220	020-088-9-002			*		10TCR-Q47
C336	47 N220	020-088-9-002			*		10TCR-Q47
C337	.033	020-060-9-003				QFT2-149	1FT-S33
C340	10		DTZ-10	NP010	CN0410		10TCC-Q10
C344a	.033	025-060-9-004				QFT2-149	1FT-S33
C344b	.033 50V	025-060-9-003					
C346	.001	025-112-9-002				QFT2-1	1FT-D10
C349	470		DD-471	GP470	GP347		10TS-T47
C351	22		DTZ-22	NP022	CN0422		10TCC-Q22
C353	.033 50V	025-060-9-004				QFT2-149	1FT-S33
C354							
C359	.0047		DD-472	GP4700	GP247		5GA-D47
C360	.0047		DD-472	GP4700	GP247		5GA-D47
C363	.0022				GP222		10TS-D22
C366	470		DD-471	GP470	GP347		10TS-T47
C367	470		DD-471	GP470	GP347		10TS-T47
C368	470		DD-471	GP470	GP347		10TS-T47

* Not normally in distributor's stock. Available thru distributor on order to manufacturer.

PARTS LIST AND DESCRIPTION (CONTINUED)

(When ordering parts, state Model, Part Number, and Description.)

CONTROLS (All wattages 1/2 watt, or less, unless listed)

ITEM No.	FUNCTION	RESIST-ANCE	REPLACEMENT DATA				
			MFGR. PART No.	CENTRALAB PART No.	CLAROSTAT PART No.	MALLORY PART No.	TRW PART No.
R8	SWR/CAL	20K	008-300-9-001 (18)				
R90	RF Gain	5000					
R9	RF Meter	10K	008-206-9-008				U260R103B
R10	S Meter	10K	008-206-9-008				U260R103B
R12	RF Gain	10K	008-206-9-008				U260R103B
R49	Squelch Range	10K	008-206-9-008				U260R103B
R51	Squelch	20K	008-300-9-002				
R72	Carrier Balance	5000	008-206-9-005				U260R502B
R86	Bias	100	008-206-9-004				
R89	Bias	100	008-206-9-004				
R93	MOD Meter	100K	002-104-5-104				U260R105B
R120	Volume/Switch	50K	008-300-9-003				
R130	SSB ALC	20K	008-206-9-009				U260R253B
R134	AM ALC	10K	008-206-9-008				U260R103B
R143	Dynamike	50K	008-300-9-004				
R317	26.965MHz	10K	008-206-9-008				U260R103B
R322	34.98885MHz	1000	008-206-9-010				U260R102B
R324	34.9875MHz	30K	008-206-9-002				U260R504B
R326	Voice Lock	20K	008-300-9-002				
R328	34.985MHz	30K	008-206-9-002				U260R504B

(18) Includes R8 and R90.

RESISTORS (Power and Special)

ITEM No.	RATING	REPLACEMENT DATA	
		WORKMAN PART No.	MFGR. PART No.
R46	2K Cold NTC		004-099-9-002

ITEM No.	RATING	REPLACEMENT DATA	
		WORKMAN PART No.	MFGR. PART No.
R372	Resistor Network		013-027-9-007 (1)

(1) Consist of seven 100K ohms 1/4 watt resistors.

COILS (RF-IF)

ITEM No.	FUNCTION	REPLACEMENT DATA			REMARKS
		PART No.	OTHER IDENTIFICATION	MILLER PART No.	
L1	Pi Filter	044-025-9-005			
L2	Pi Filter	044-025-9-005			
L3	Ant Match	041-096-9-001			
L4	RF Choke	042-022-9-002			
L5	XMT RF	041-096-9-002			
L6	RF Choke	042-027-9-001			
L7	XMT Driver	041-096-9-003			
L8	RF Choke	042-027-9-001			
L9	RF Choke	042-009-9-003			
L11	Pi Filter	044-025-9-005			
L13	RF Choke	042-027-9-002			
L14	RF Choke	042-027-9-002			
L15	RF Choke	042-027-9-003			
L16	RF Choke	042-027-9-003			
L301	Buffer Input (17.0555MHz)	041-096-9-004	25095		
L302	Phase Comparator Output (34.985MHz)	041-096-9-005	25096		
L303	Osc 17.0555MHz	041-096-9-006	25097		
L304	XMT Mixer	041-084-9-003	25090		
T1	Rec Antenna (27MHz)	066-028-9-001	25099		
T2	RF (27MHz)	066-013-9-002	L1641	CBS815-TC	
T3	RF (27MHz)	066-013-9-002	L1641	CBS815-TC	
T4	IF (7.8MHz)	066-028-9-002	25091		
T5	IF (7.8MHz)	066-028-9-002	29051		
T6	IF (7.8MHz)	066-029-9-001	L1839	CBS415-7TC	
T7	XMT Mixer (7.8MHz)	066-015-9-001	L1786	CBS412-7TC	
T8	XMT Mixer (7.8MHz)	066-015-9-002	L1787	CBS413-7TC	
T9	XMT Mixer (27MHz)	006-015-9-003	L1785	CBS816-TC	
T10	XMT Mixer (27MHz)	066-013-9-002	L1641	CBS815-TC	
T11	XMT Mixer (27MHz)	066-013-9-002	L1641	CBS815-TC	
T12	XMT RF (27MHz)	066-013-9-002	L1641	CBS815-TC	
T301	Mixer (18.507MHz)	066-028-9-003	25093		
T302	Multiplier Input (18.507MHz)	066-028-9-003	25093		
T303	Multiplier Output (18.507MHz)	066-028-9-004	24094		

PARTS LIST AND DESCRIPTION (CONTINUED)

(When ordering parts, state Model, Part Number, and Description.)

FILTER CHOKE

ITEM No.	RATINGS			REPLACEMENT DATA			NOTES
	CURRENT (Measured)	DC RES.	INDUCTANCE (0 CURRENT 1000~)	MFGR. PART No.	THORDARSON PART No.	TRIAD PART No.	
L10	1.6A	.12	1.14mH	042-022-9-003 5015(1)			(1) Number on unit.

TRANSFORMER (Audio Output)

ITEM No.	IMPEDANCE		REPLACEMENT DATA			NOTES
	PRI.	SEC.	MFGR. PART No.	THORDARSON PART No.	TRIAD PART No.	
T13	32	18	061-029-9-001 5014(1)		MCB-18	(1) Number on unit.

SPEAKER

ITEM No.	TYPE	REPLACEMENT DATA		NOTES
		MFGR. PART No.	QUAM PART No.	
SP1	2 1/4" X 6 1/4" PM 16 Ohms	580-012-9-001		

FUSE DEVICES

ITEM No.	DESCRIPTION	REPLACEMENT DATA						
		PART No.		BUSS PART No.		LITTELFUSE PART No.		WORKMAN PART No.
		DEVICE	HOLDER	DEVICE	HOLDER	DEVICE	HOLDER	DEVICE
F1	3A Quick Acting	191-251-9-003		AGC-3	HDJ	312003	150145	FG3-2

PARTS LIST AND DESCRIPTION (CONTINUED)

(When ordering parts, state Model, Part Number, and Description.)

MICROPHONE

ITEM No.	REPLACEMENT DATA				CONNECTION DATA						
	MFGR. PART No.	GC PART No.	GC NOISE CANCEL	GC POWER	GC CONNECTOR	GC Red	GC Shield	GC Yellow	GC Blue	GC White	GC Black
MK1	562-003-9-001	18-032	18-034	18-010	18-092	2	1	3	NC	NC	4

MISCELLANEOUS

ITEM No.	PART NAME	PART No.	NOTES
CD316	LED	158-013-9-002	TLR-312
CD317	LED	158-013-9-002	TLR-312
J1	Jack	772-002-9-001	Antenna
J2	Jack	773-057-9-001	Microphone
J3	Jack	773-084-9-001	PA
J4	Jack	773-084-9-001	External Speaker
K1	Relay	441-010-9-001	XMT/Rec
K2	Relay	441-020-9-001	XMT/Rec
M1	Meter	320-036-9-001	RF
PL	Lamp		6.36V @ 30mA Meter
S1	Switch	080-007-9-002	CAL/SWL
S2	Switch	080-007-9-001	MOD/RF
S3	Switch	080-007-9-002	ANL/NB ANL
S4	Switch	080-007-9-002	LSB/AM/USB
S5	Switch	080-007-9-001	CB/PA
S301	Switch	083-213-9-001	Channel Selector
S302	Switch	080-007-9-001	Dim/Bright
U1	Filter	143-007-9-001	Crystal(7.8MHz)
W1	Cord	426-019-9-001	DC
X1	Crystal	133-017-9-001	7.8025MHz
X301	Crystal	133-017-9-002	17.05625MHz
X302	Crystal	133-012-9-001	5.12MHz

CABINETS & CABINET PARTS (When ordering specify model, chassis & color)

ITEM	PART No.
Knob, Control	751-144-9-002
Knob, RF	751-144-9-004

ITEM	PART No.
Knob, SWR	751-144-9-003

WIRING DATA

General-use Hook-up Wire (available in 5 colors) BELDEN No. 8523
Shielded Hook-up Wire (spiral wrapped) . . . . . BELDEN No. 8421
(braided) . . . . . BELDEN No. 8401
Speaker Cable (available in 4 colors) . . . . . BELDEN No. 8782
Bonding Strap . . . . . BELDEN No. 8672
AC Power Cord . . . . . (6') BELDEN No. 17106
(9') BELDEN No. 17109

Coiled Microphone Cable
3-conductor (1 shielded) 23AWG BELDEN No. 9471 (5')
BELDEN No. 8497 (6')
BELDEN No. 9472 (7-1/2')
28AWG BELDEN No. 9466 (6')
31AWG BELDEN No. 9468 (10')
4-conductor (unshielded) 23AWG BELDEN No. 8415 (6')
5-conductor (1 shielded) 28AWG BELDEN No. 9467 (6')
BELDEN No. 9465 (7-1/2')

NOTE

Repair or adjustment of transmitter circuits must be under supervision of a person with first-or second-class radiotelephone license.
(Refer to FCC Rules and Regulations Part 95, Subpart C & D.)

The frequency of the transmitter should be checked periodically with a secondary frequency standard to insure proper and legal operation.

Best results will be obtained when adjusting the final RF output circuit if the antenna normally used is connected and the chassis is as nearly in the cabinet as possible.

Connect either 50-ohm dummy load or the normally used antenna system.

MODEL MADISON

HOWARD W. SAMS & CO., INC. Indianapolis, Indiana 46206
 8CF773

ALIGNMENT INSTRUCTIONS

CAUTION: Use isolation transformer or observe polarity when connecting test equipment.
Maintain line voltage at 120V AC. Allow a 15-minute warm-up period.
Adjustments made with 13.8-volt DC input.
Connect low sides of test equipment to ground unless specified otherwise.
Connect 50-ohm dummy load or antenna before keying transmitter.

Suggested Alignment Tools:	GC ELECTRONICS:
L27, L30, L32	5009, 5000, 8276, 8728, 8728A
L1 thru L8, L16, L17, L24, L37, L39	9440
CT1 thru CT7	5000, 8276

SYNTHESIZER ALIGNMENT

TEST EQUIPMENT	TRANSCEIVER	ADJUST	REMARKS
Input of RF VTVM to TP6.	Ch. 1 Clarifier-Midrange AM	L24	Adjust for maximum.
Input of DC meter to TP7.	Ch. 1	L17	Adjust for 2.0 volts.
Input of RF VTVM to TP8.	Ch. 19	L16	Adjust for maximum.
Input of frequency counter to TP8.	Ch. 19	CT6	Adjust for 34.9850MHz ±20Hz.
Input of frequency counter to TP8.	Ch. 19, USB	CT4	Adjust for 34.9875MHz ±20Hz.
Input of frequency counter to TP8.	Ch. 19, LSB	CT5	Adjust for 34.9825MHz ±20Hz.
Input of frequency counter to TP8.	Ch. 19, LSB, Xmit	VR9	Adjust for 34.9825MHz ±20Hz.
Input of frequency counter to TP9.	Ch. 19, USB, Xmit	CT2	Adjust for 7.8025MHz +5Hz -0Hz.
Input of frequency counter to TP9.	Ch. 19, LSB, Xmit	CT3	Adjust for 7.7975MHz +0Hz -5Hz.

RECEIVER ALIGNMENT

Connect an AC VTVM or AF wattmeter across speaker voice coil.
Adjust volume control to obtain a suitable indication.

AM

TEST EQUIPMENT	TRANSCEIVER	ADJUST	REMARKS
Output of signal generator thru .01uF to antenna jack. 23.5MHz, no modulation. Output 200uV. Input of RF VTVM to TP5.	Ch. 19, AM RF Gain-Maximum NB-On	L1,L2	Adjust for maximum.

RECEIVER ALIGNMENT

Connect an AC VTVM or AF wattmeter across speaker voice coil.
Adjust volume control to obtain a suitable indication.

SSB

TEST EQUIPMENT	TRANSCEIVER	ADJUST	REMARKS
Output of signal generator thru .01uF to antenna jack. 27.186MHz, no modulation. Output .25uV.	Ch. 19, USB RF Gain-Maximum Clarifier-Midrange Volume-Maximum	L8,L7,L5, L6,L4,L3	Adjust for maximum output.
Output of signal generator thru .01uF to antenna jack. 27.186MHz, no modulation. Output .25uV.	Ch. 19	CT1	Adjust for .5 watts audio.

RECEIVER ADJUSTMENTS

Connect an AC VTVM or AF wattmeter across speaker voice coil.
Adjust volume control to obtain a suitable indication.

TEST EQUIPMENT	TRANSCEIVER	ADJUST	REMARKS
Output of signal generator thru .01uF to antenna jack. 27.185MHz, no modulation. Output 1000uV.	Ch. 19, USB RF Gain-MINIMUM Volume-Maximum	VR2	SSB AGC Adjust VR2 for .5 watts audio.
Output of signal generator thru .01uF to antenna jack. 27.186MHz, no modulation. Output 100uV.	Ch. 19	VR1	S METER Adjust for 9 on S scale of meter.

RECEIVER ADJUSTMENTS (cont)

TEST EQUIPMENT	TRANSCEIVER	ADJUST	REMARKS
Output of signal generator thru .01uF to antenna jack. 27.186MHz, no modulation. Output 1000uV.	Ch. 19	VR3	SQUELCH RANGE Set squelch control VR404 fully clockwise. Adjust VR3 so that squelch just breaks.
Output of signal generator thru .01uF to antenna jack. 27.185MHz, 1000Hz @ 30% modulation. Output .5uV.	Ch. 19, AM	VR5	AM AGC Adjust VR5 for .5 watts audio.

TRANSMITTER ALIGNMENT

Connect an RF wattmeter and 50-ohm, 25-watt dummy load to antenna connector.
NOTE: Be sure to check transmit frequency and power on all active channels after alignment of transmitter.
See page 4 for channel frequencies.

AM

TEST EQUIPMENT	TRANSCEIVER	ADJUST	REMARKS
Input of spectrum analyzer to antenna jack.	Ch. 19	L27	Adjust for MINIMUM at 54MHz.

TRANSMITTER ALIGNMENT

Connect an RF wattmeter and 50-ohm, 25-watt dummy load to antenna connector.
NOTE: Be sure to check transmit frequency and power on all active channels after alignment of transmitter.
See page 4 for channel frequencies.

SSB

TEST EQUIPMENT	TRANSCEIVER	ADJUST	REMARKS
Output of 2 tone generator to mike input. 500Hz and 2400Hz at .5 volts.	Ch. 19, USB Mike Gain-Maximum	L39,L37, L32,L30	Adjust for maximum.
Output of 2 tone generator to mike input. 500Hz and 2400Hz at .5 volts.	Ch. 19, USB	CT7	Adjust CT7 for 11.0 watts.

TRANSMITTER ADJUSTMENTS

Connect an RF wattmeter and 50-ohm, 25-watt dummy load to antenna connector.
NOTE: Be sure to check transmit frequency and power on all active channels after adjustments of transmitter.
See page 4 for channel frequencies.

TEST EQUIPMENT	TRANSCEIVER	ADJUST	REMARKS
DC current meter to TP3 and TP4. No modulation.	Ch. 19, USB	VR15	BIAS Adjust VR15 for 40mA ±10mA.
DC current meter to TP1 and TP2. No modulation.	Ch. 19, USB	VR16	BIAS Adjust VR16 for 15mA ±10mA.
No modulation.	Ch. 19, USB	VR4	BALANCE Adjust for MINIMUM RF.
No modulation.	Ch. 19, AM	VR8	AM REG Adjust VR8 for 3.8 watts.
No modulation.	Ch. 19, AM	VR12	RF PANEL METER Adjust VR12 for 3.8 watts on RF scale of meter.
Inject a 1000Hz signal at mic input. Modulation meter to antenna jack.	Ch. 19, AM AMC-Maximum	VR7	AM AMC Adjust signal for 50% modulation. Increase signal 630 times. Adjust VR7 for 95% modulation.
Modulation meter to antenna jack. Inject a 1000Hz signal at mic input.	Ch. 13, AM	VR14	MOD Adjust VR14 so that MOD panel meter agrees with external modulation meter.

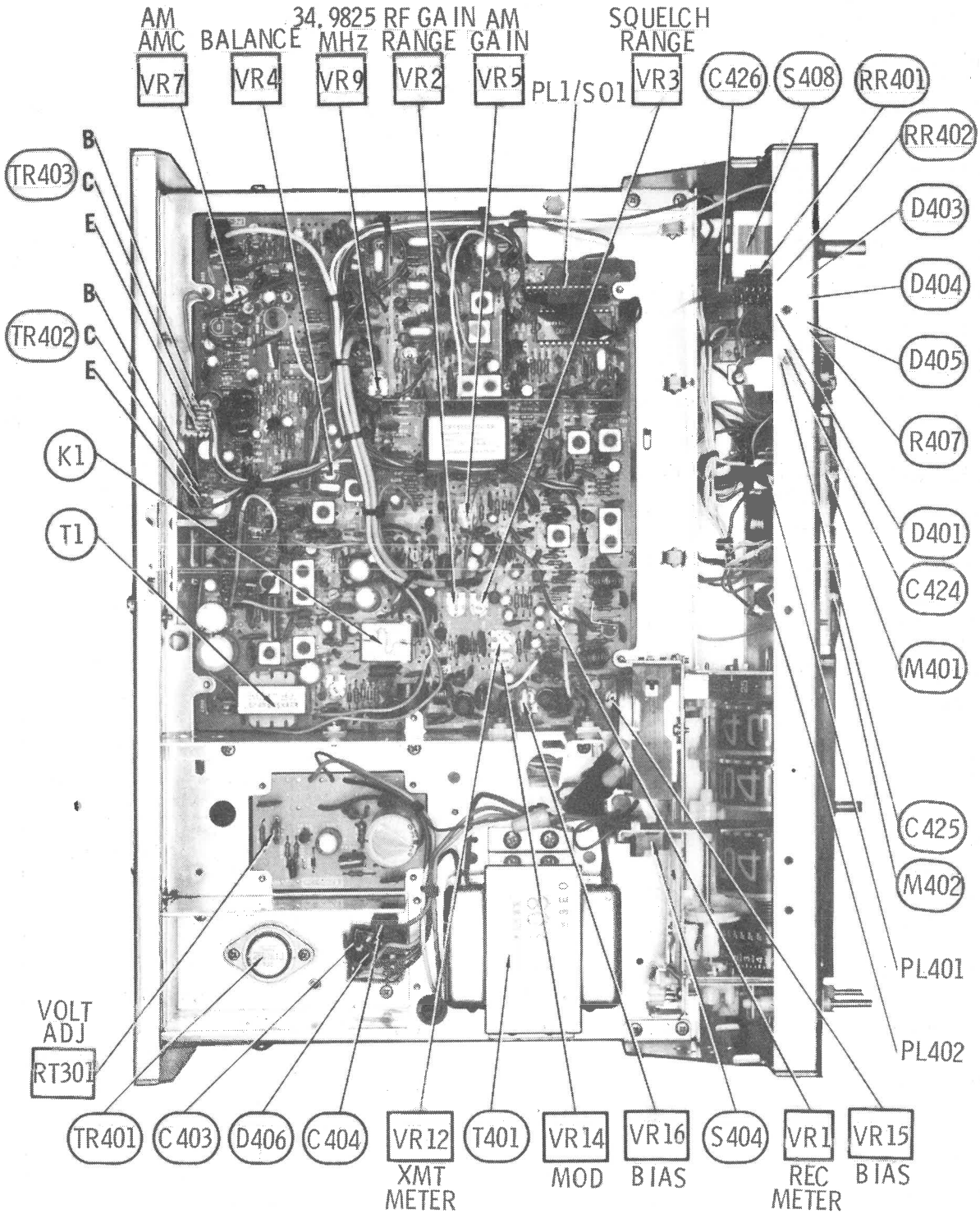
AM AMC BALANCE
VR7
VR4
34.9825 MHz
VR9
RF GAIN RANGE
VR2
AM GAIN
VR5
PL1/S01
SQUELCH RANGE
VR3
C426
S408
RR401
RR402
D403
D404
D405
R407
D401
C424
M401
C425
M402
PL401
PL402
TR403
B
C
E
TR402
B
C
E
K1
T1
VOLT ADJ
RT301
TR401
C403
D406
C404
VR12
XMT METER
T401
VR14
MOD
VR16
BIAS
S404
VR1
REC METER
VR15
BIAS

CHASSIS - TOP

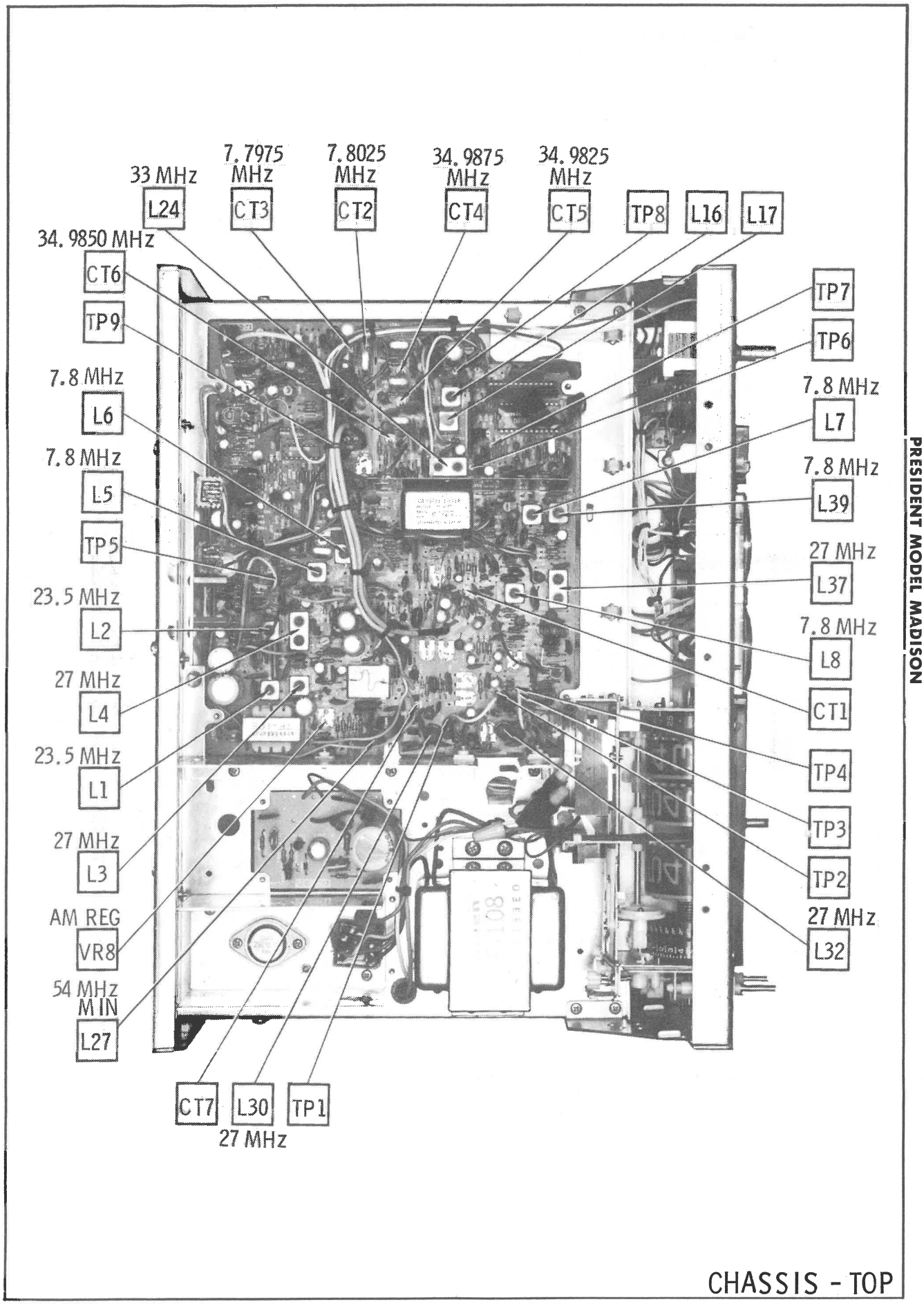
33 MHz
L24
7.7975 MHz
CT3
7.8025 MHz
CT2
34.9875 MHz
CT4
34.9825 MHz
CT5
TP8
L16
L17
34.9850 MHz
CT6
TP9
7.8 MHz
L6
7.8 MHz
L5
TP5
23.5 MHz
L2
27 MHz
L4
23.5 MHz
L1
27 MHz
L3
AM REG
VR8
54 MHz MIN
L27
CT7
L30
27 MHz
TP1
TP7
TP6
7.8 MHz
L7
7.8 MHz
L39
27 MHz
L37
7.8 MHz
L8
CT1
TP4
TP3
TP2
27 MHz
L32

CHASSIS - TOP

A Howard W. Sams CIRCUITRACE® Photo

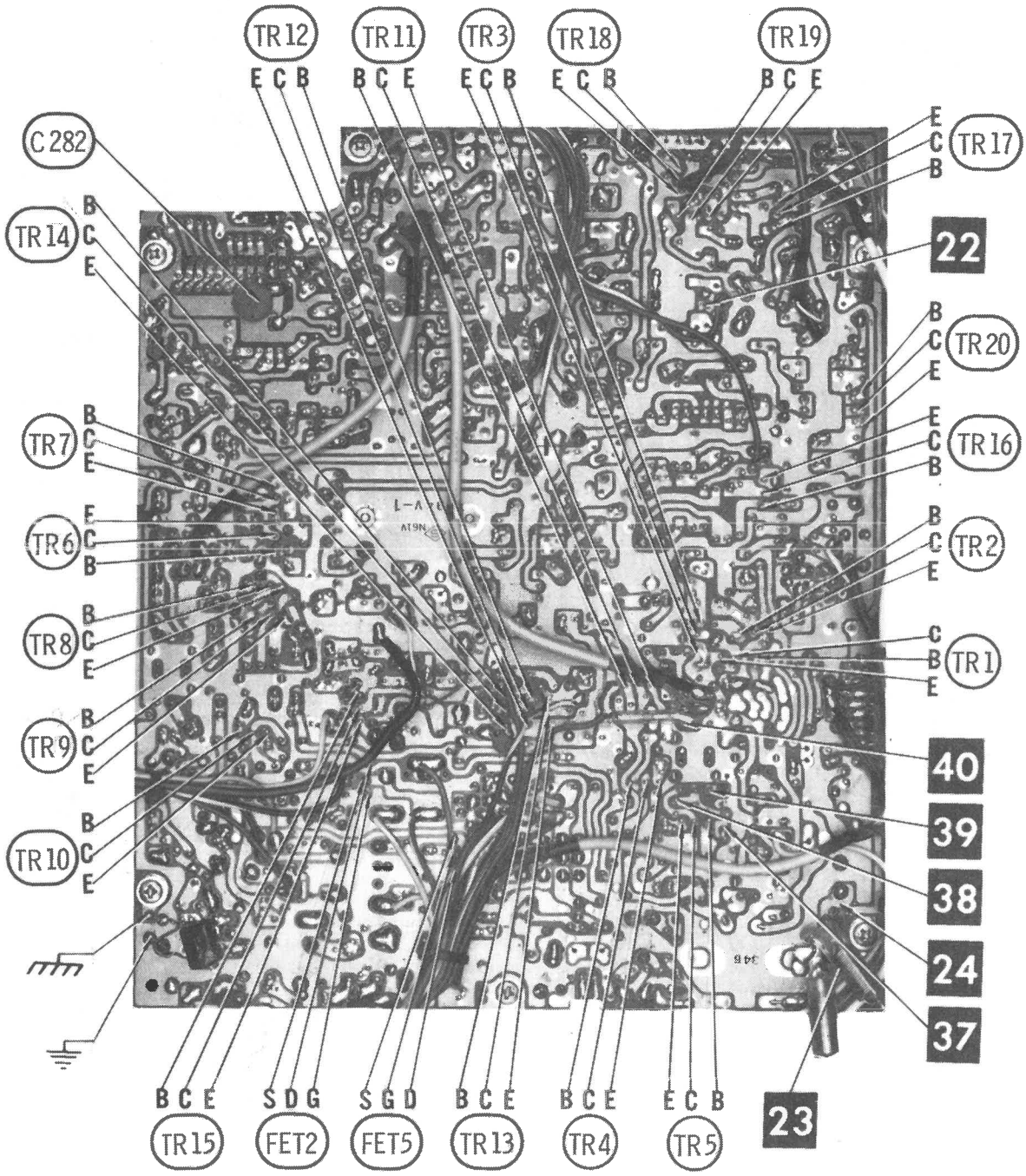

MAIN BOARD

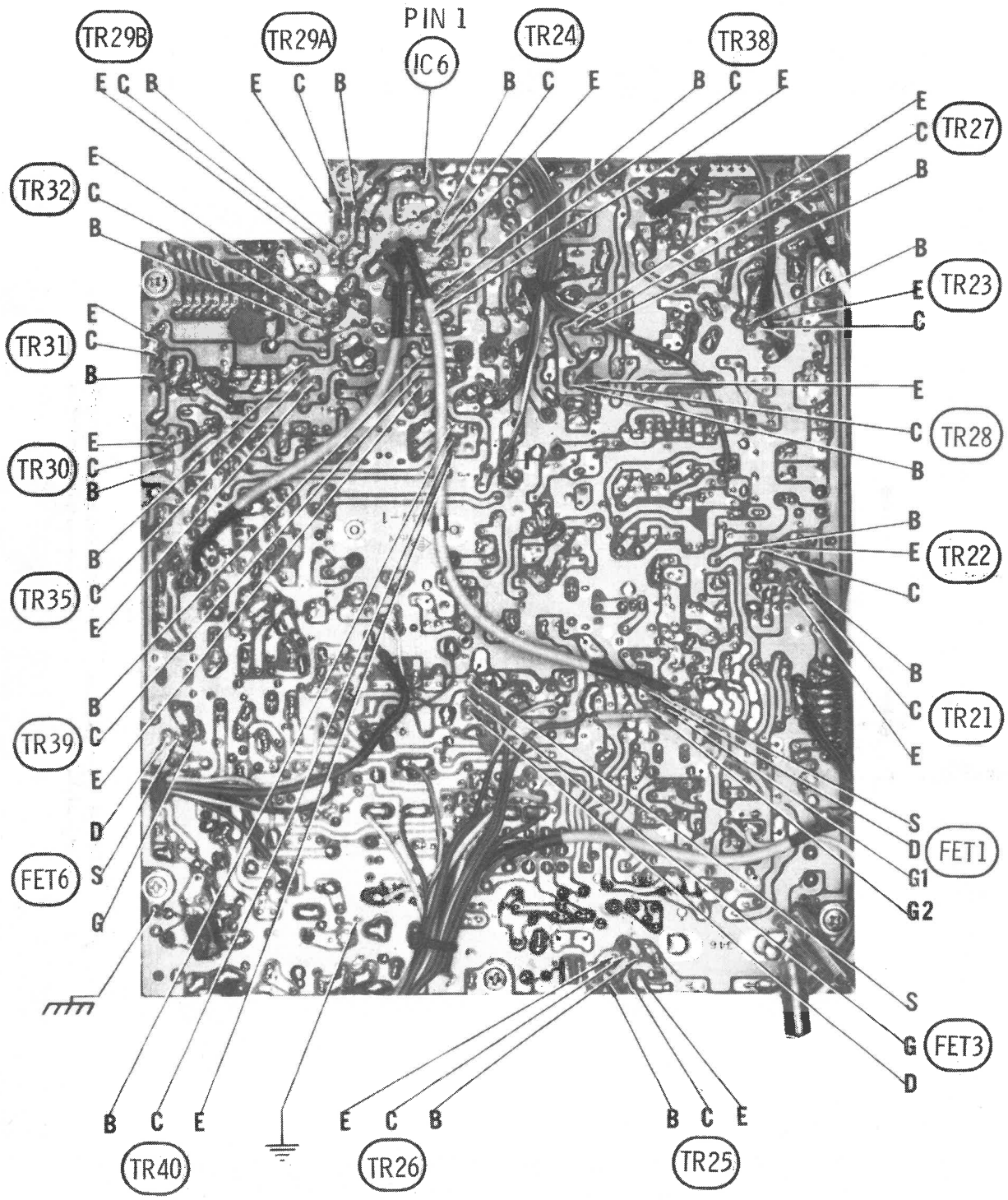
PIN 1
IC6
TR29B
E C B
TR29A
E C B
TR24
B C E
TR38
B C E
TR27
E C B
TR32
E C B
TR31
E C B
TR30
E C B
TR35
B C E
TR39
B C E
FET6
D S G
TR23
B E C
TR28
E C B
TR22
B E C
TR21
B C E
FET1
S D G1 G2
FET3
S G D
TR40
B C E
TR26
E C B
TR25
B C E

MAIN BOARD

A Howard W. Sams CIRCUITRACE® Photo

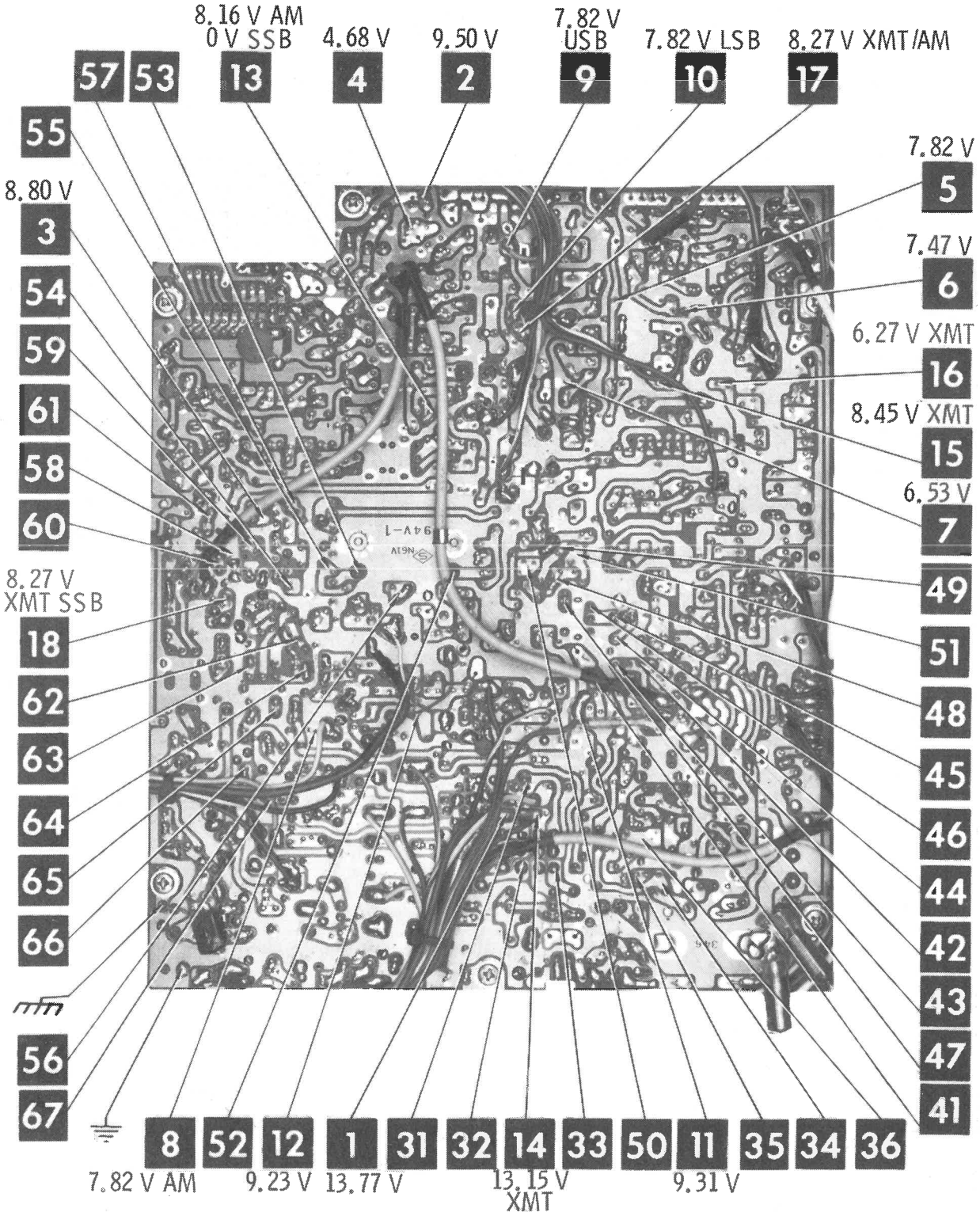

MAIN BOARD

A Howard W. Sams CIRCUITRACE® Photo

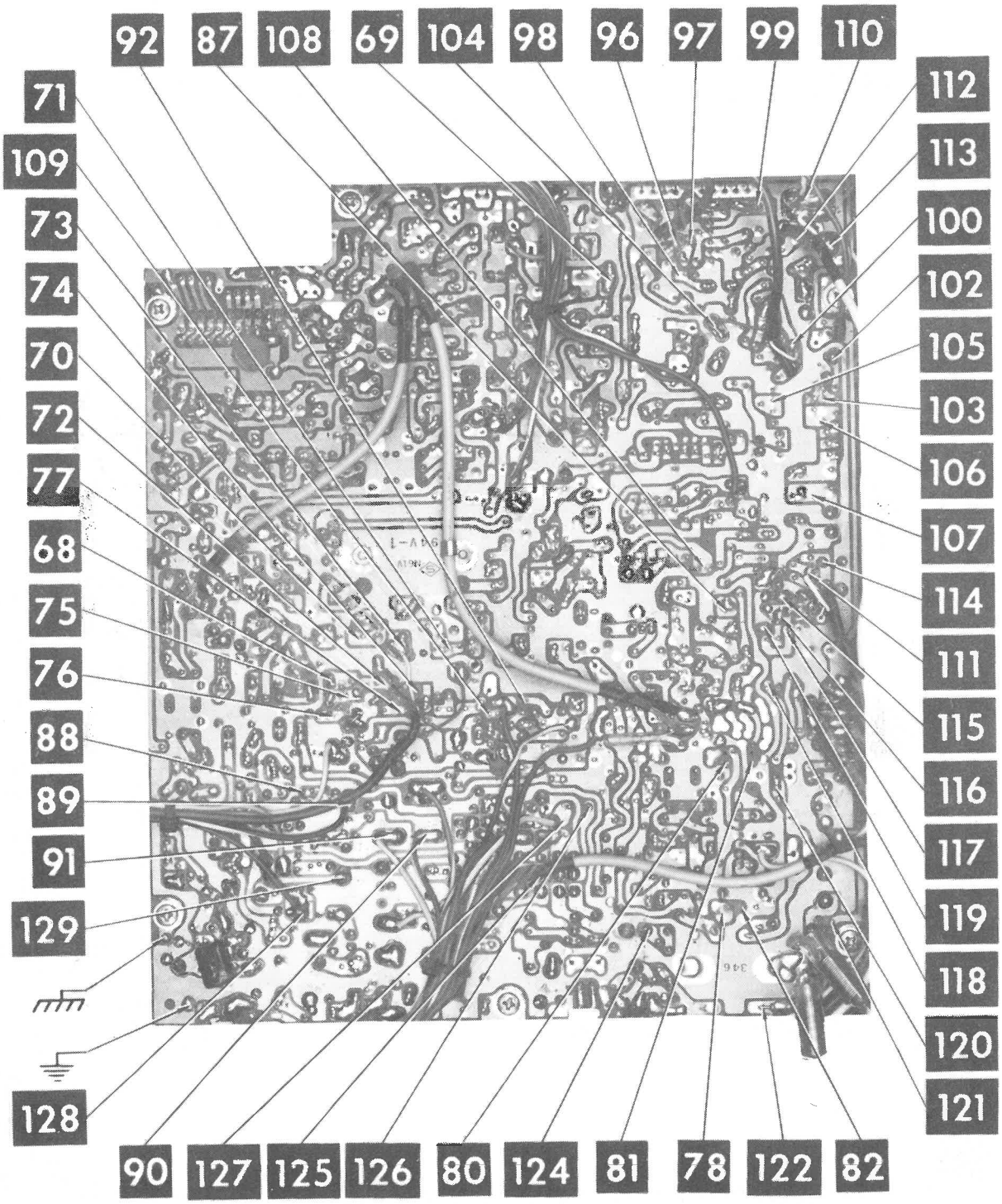

MAIN BOARD

A Howard W. Sams CIRCUITRACE® Photo

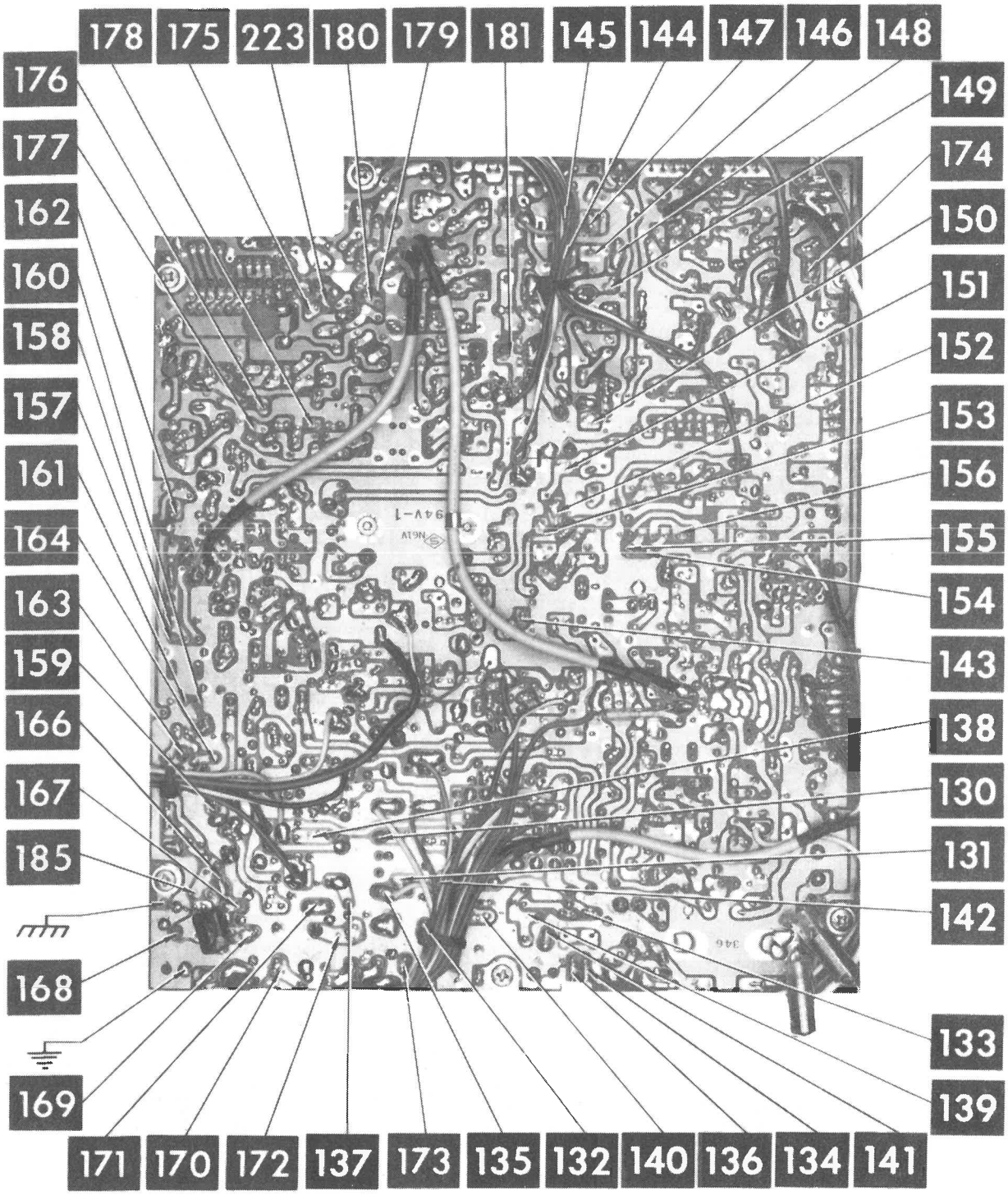

MAIN BOARD

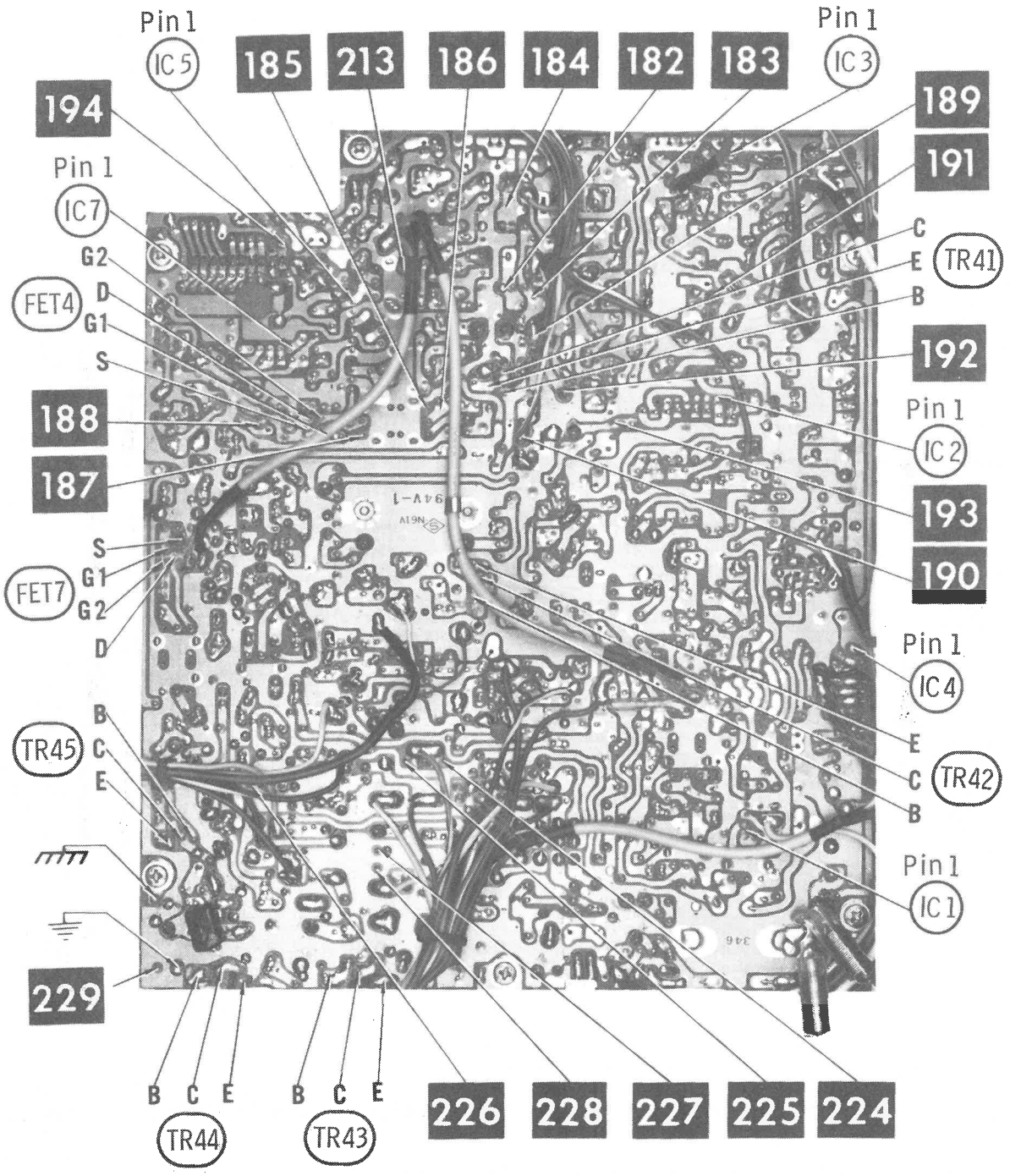
Pin 1
IC 5
185
213
186
184
182
183
Pin 1
IC 3
194
189
191
Pin 1
IC 7
G2
D
G1
S
FET4
C
E
B
TR41
192
188
187
Pin 1
IC 2
193
190
S
G1
G2
D
FET7
Pin 1
IC 4
B
C
E
TR45
E
C
B
TR42
Pin 1
IC 1
229
B C E
TR44
B C E
TR43
226
228
227
225
224

MAIN BOARD

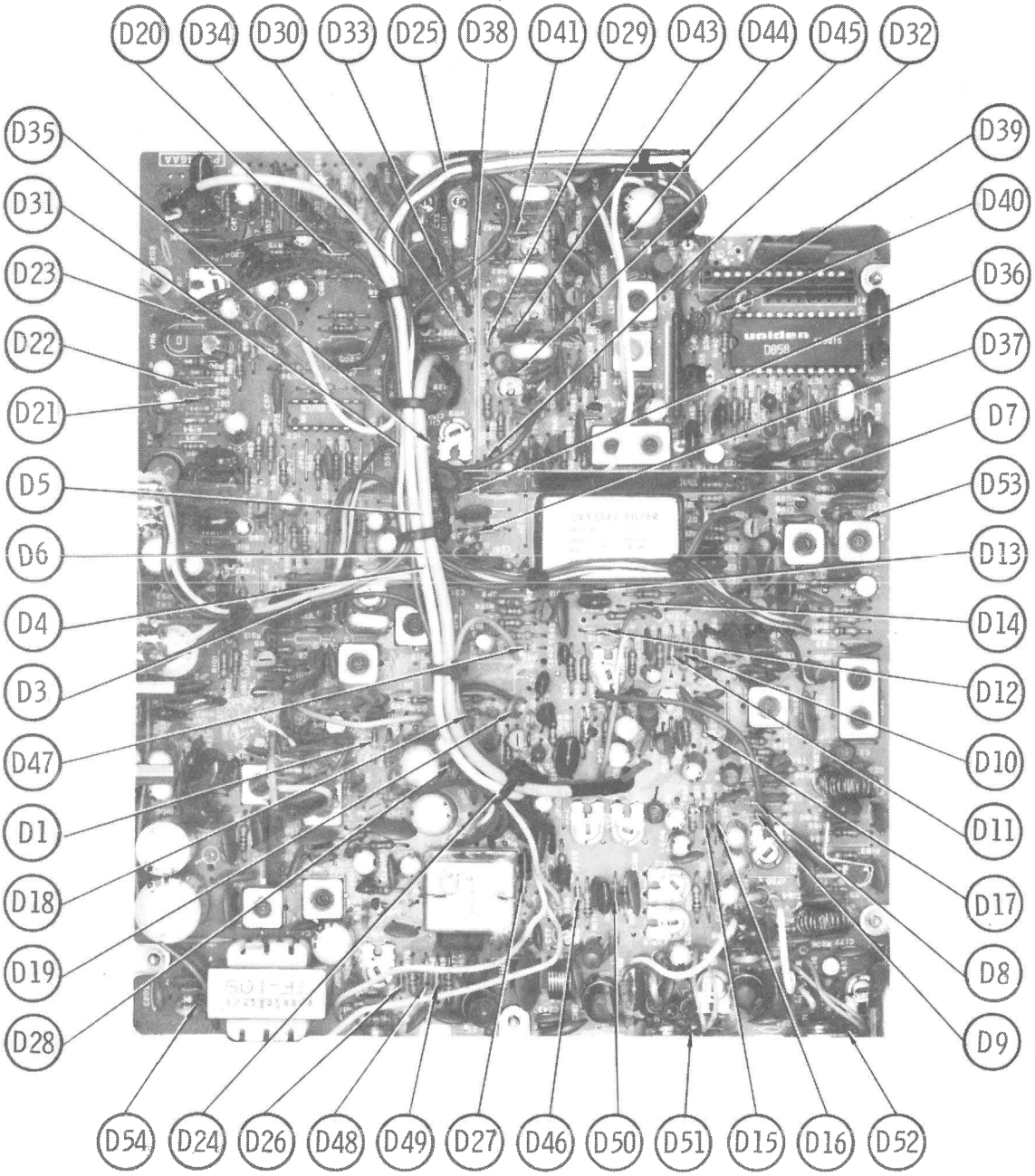
D20
D34
D30
D33
D25
D38
D41
D29
D43
D44
D45
D32
D35
D31
D23
D22
D21
D5
D6
D4
D3
D47
D1
D18
D19
D28
D39
D40
D36
D37
D7
D53
D13
D14
D12
D10
D11
D17
D8
D9
D54
D24
D26
D48
D49
D27
D46
D50
D51
D15
D16
D52

MAIN BOARD

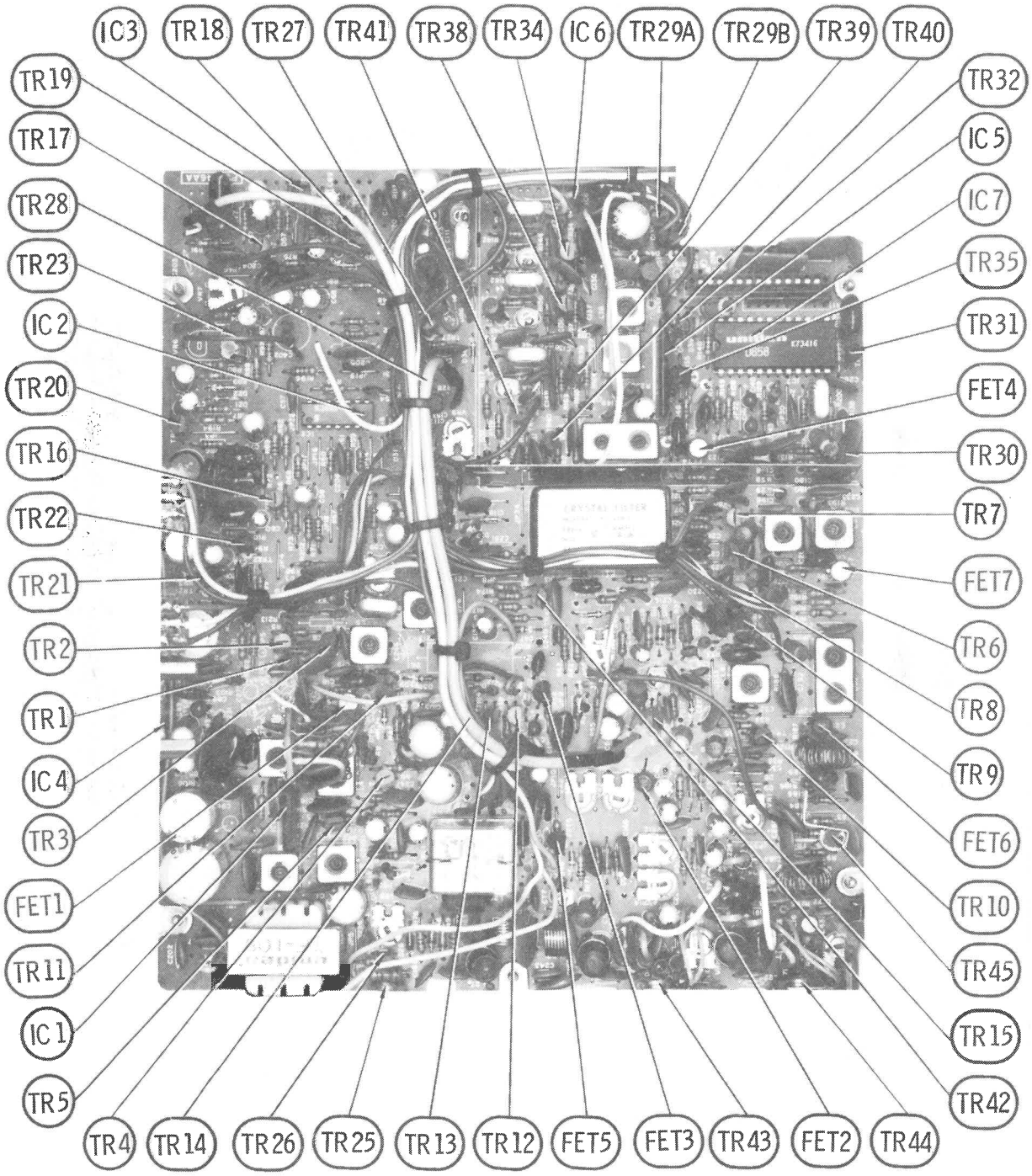
IC3
TR18
TR27
TR41
TR38
TR34
IC6
TR29A
TR29B
TR39
TR40
TR19
TR17
TR28
TR23
IC2
TR20
TR16
TR22
TR21
TR2
TR1
IC4
TR3
FET1
TR11
IC1
TR5
TR32
IC5
IC7
TR35
TR31
FET4
TR30
TR7
FET7
TR6
TR8
TR9
FET6
TR10
TR45
TR15
TR42
TR4
TR14
TR26
TR25
TR13
TR12
FET5
FET3
TR43
FET2
TR44

MAIN BOARD

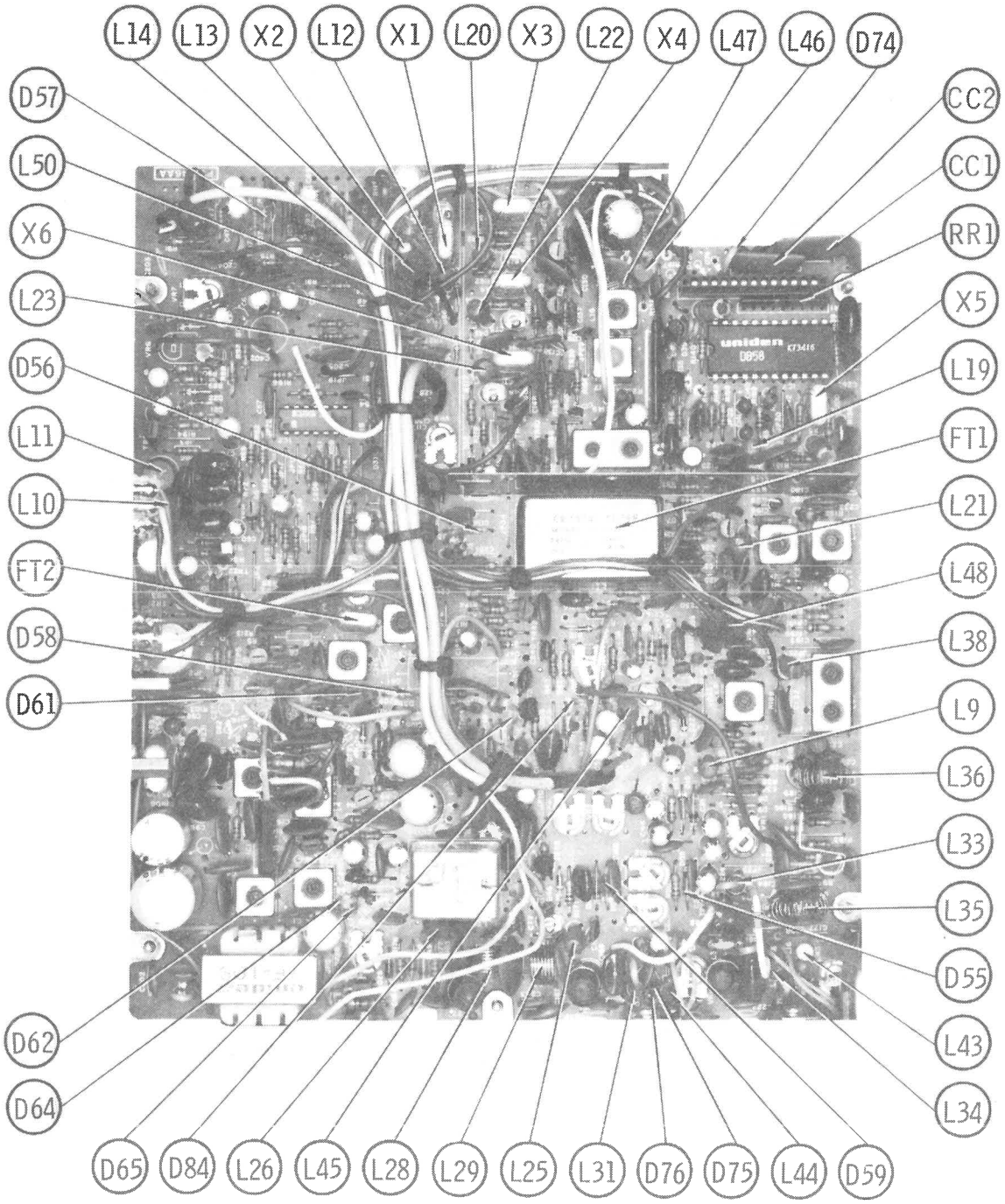
L14
L13
X2
L12
X1
L20
X3
L22
X4
L47
L46
D74
D57
L50
X6
L23
D56
L11
L10
FT2
D58
D61
D62
D64
D65
D84
L26
L45
L28
L29
L25
L31
D76
D75
L44
D59
CC2
CC1
RR1
X5
L19
FT1
L21
L48
L38
L9
L36
L33
L35
D55
L43
L34

MAIN BOARD

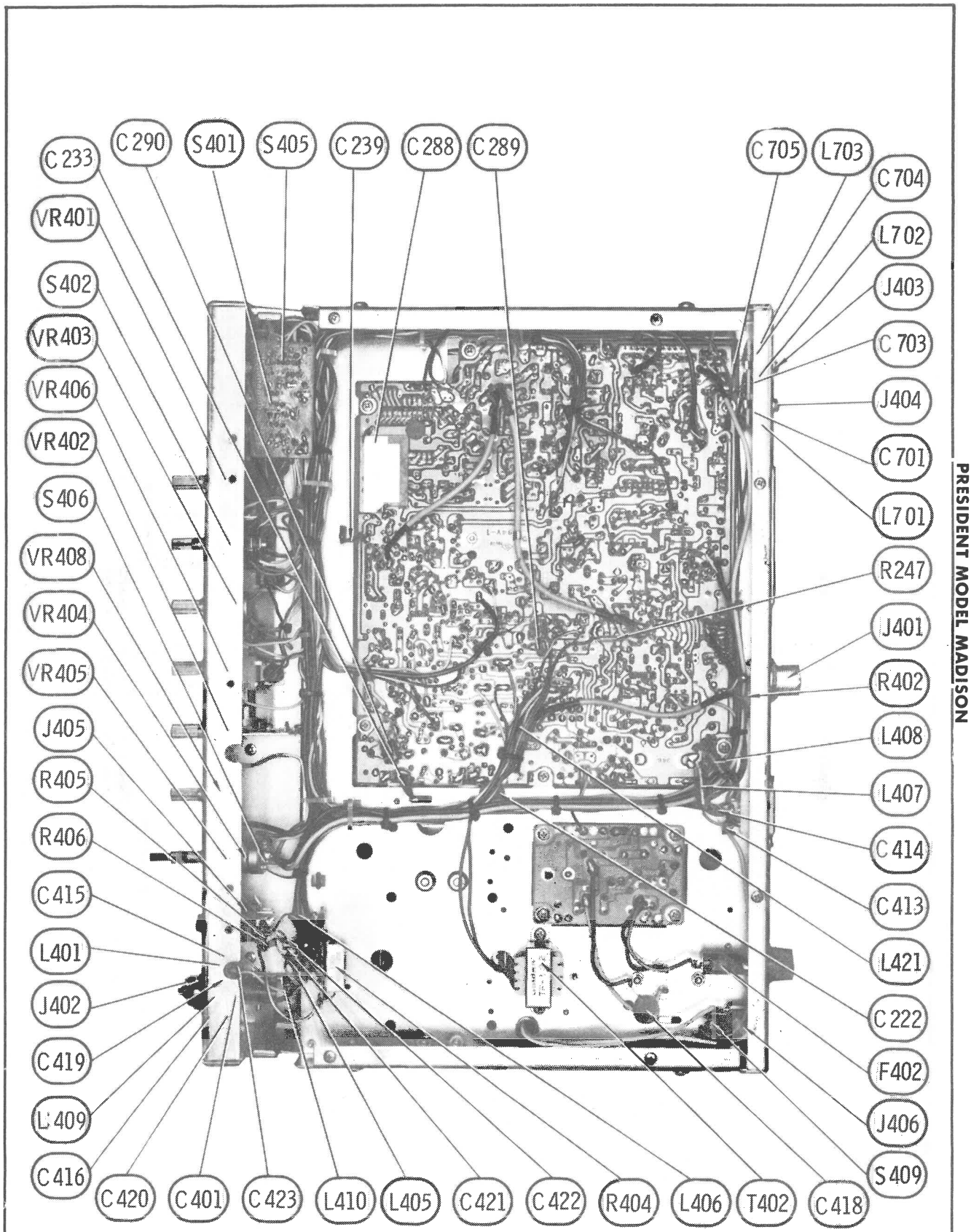
C233
C290
S401
S405
C239
C288
C289
C705
L703
C704
VR401
L702
S402
J403
VR403
C703
VR406
J404
VR402
C701
S406
L701
VR408
R247
VR404
J401
VR405
R402
J405
L408
R405
L407
R406
C414
C415
C413
L401
L421
J402
C222
C419
F402
L409
J406
C416
S409
C420
C401
C423
L410
L405
C421
C422
R404
L406
T402
C418

MAIN BOARD

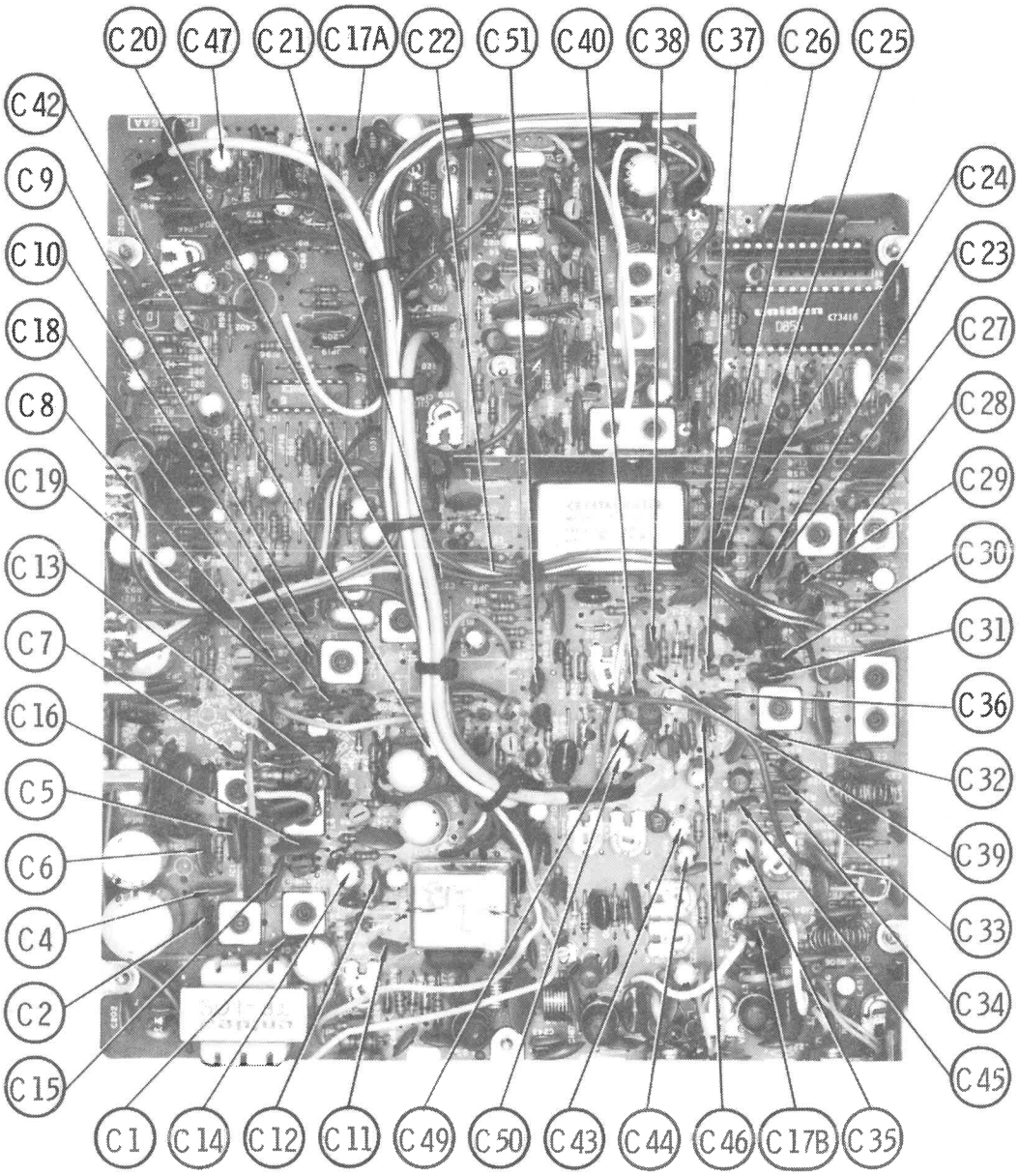
C20
C47
C21
C17A
C22
C51
C40
C38
C37
C26
C25
C42
C9
C10
C18
C8
C19
C13
C7
C16
C5
C6
C4
C2
C15
C24
C23
C27
C28
C29
C30
C31
C36
C32
C39
C33
C34
C45
C1
C14
C12
C11
C49
C50
C43
C44
C46
C17B
C35

MAIN BOARD

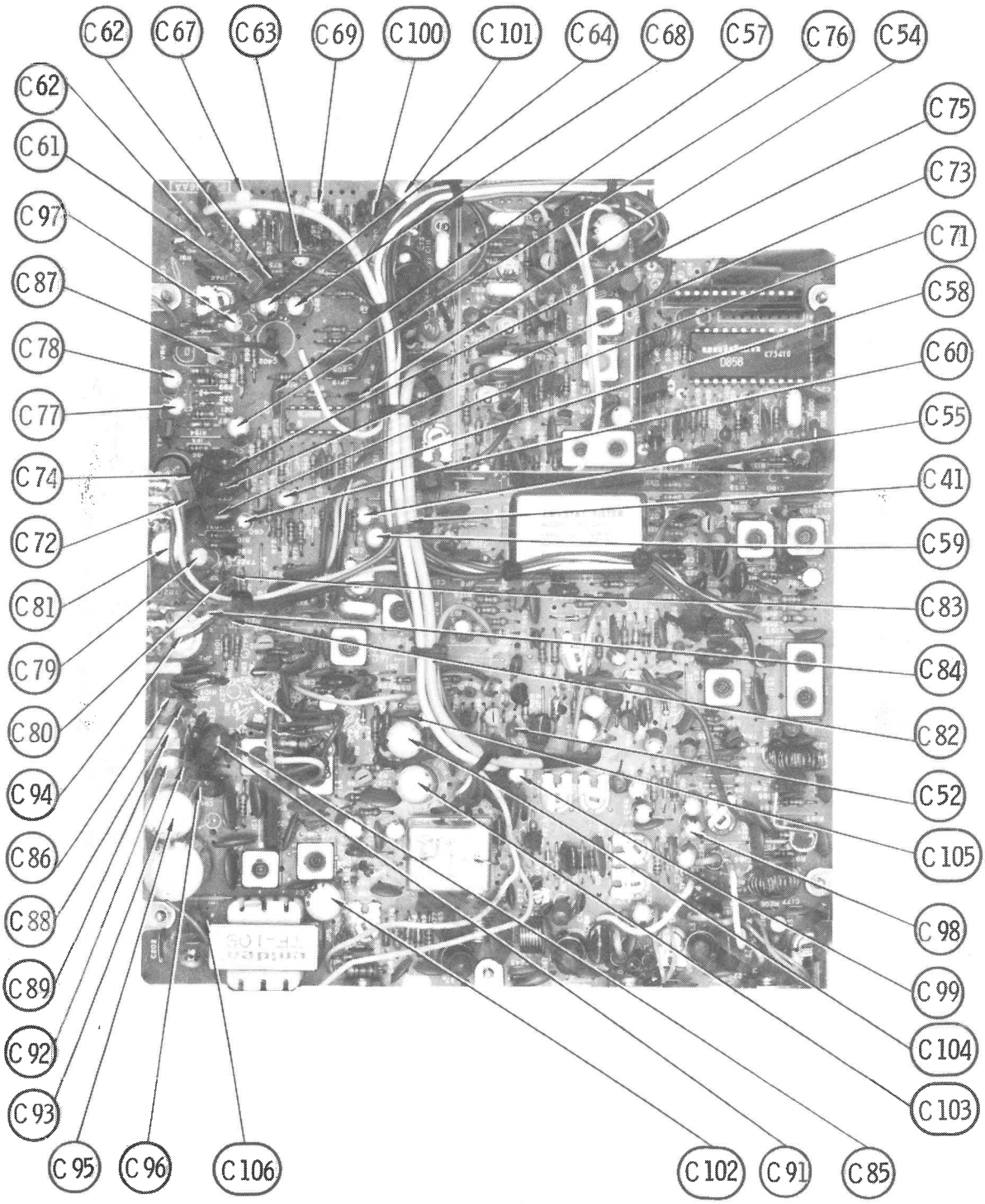
C62
C67
C63
C69
C100
C101
C64
C68
C57
C76
C54
C62
C61
C97
C87
C78
C77
C74
C72
C81
C79
C80
C94
C86
C88
C89
C92
C93
C95
C96
C106
C102
C91
C85
C75
C73
C71
C58
C60
C55
C41
C59
C83
C84
C82
C52
C105
C98
C99
C104
C103

MAIN BOARD

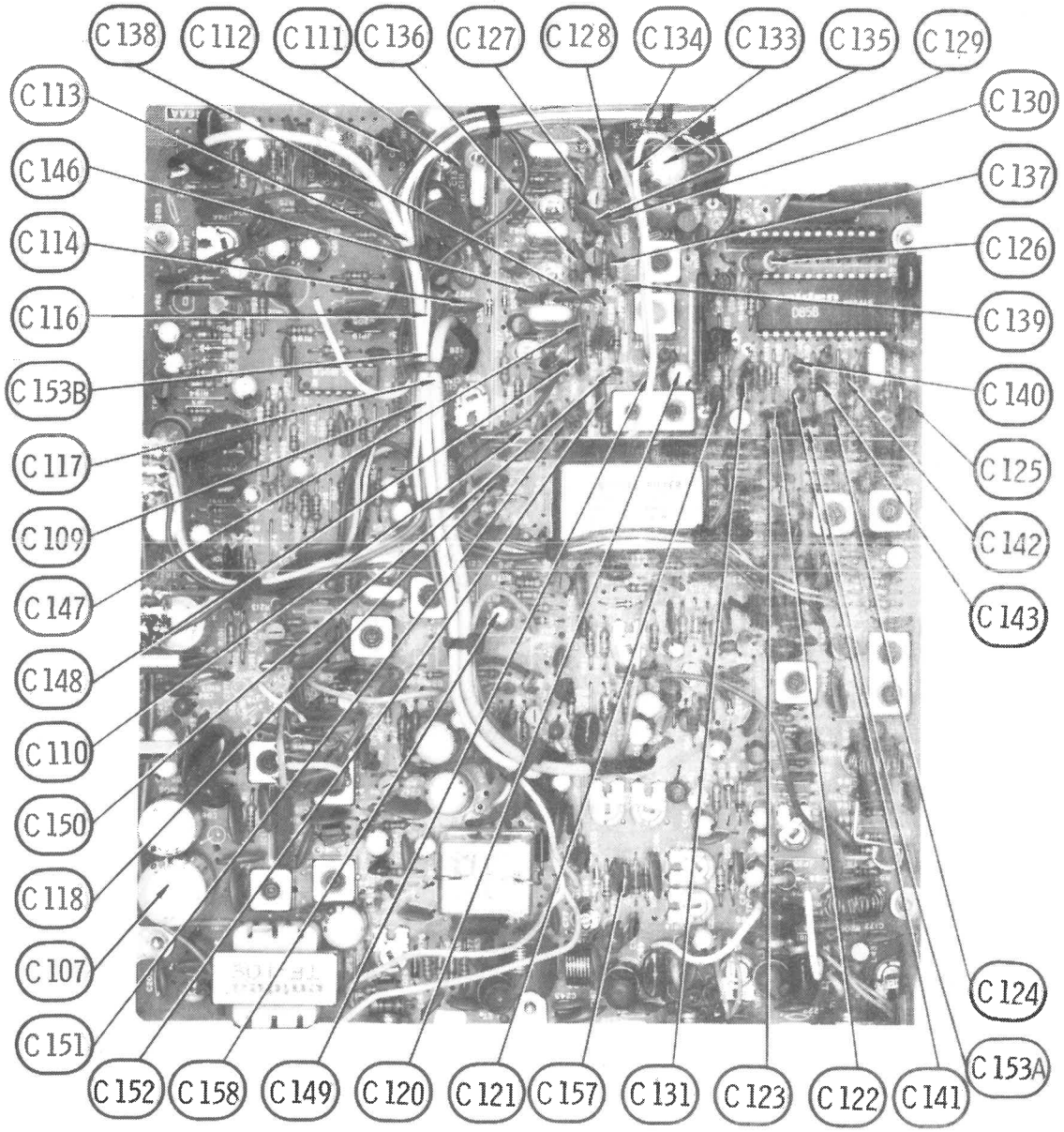
C 138
C 112
C 111
C 136
C 127
C 128
C 134
C 133
C 135
C 129
C 113
C 130
C 146
C 137
C 114
C 126
C 116
C 139
C 153B
C 140
C 117
C 125
C 109
C 142
C 147
C 143
C 148
C 110
C 150
C 118
C 107
C 124
C 151
C 153A
C 152
C 158
C 149
C 120
C 121
C 157
C 131
C 123
C 122
C 141

MAIN BOARD

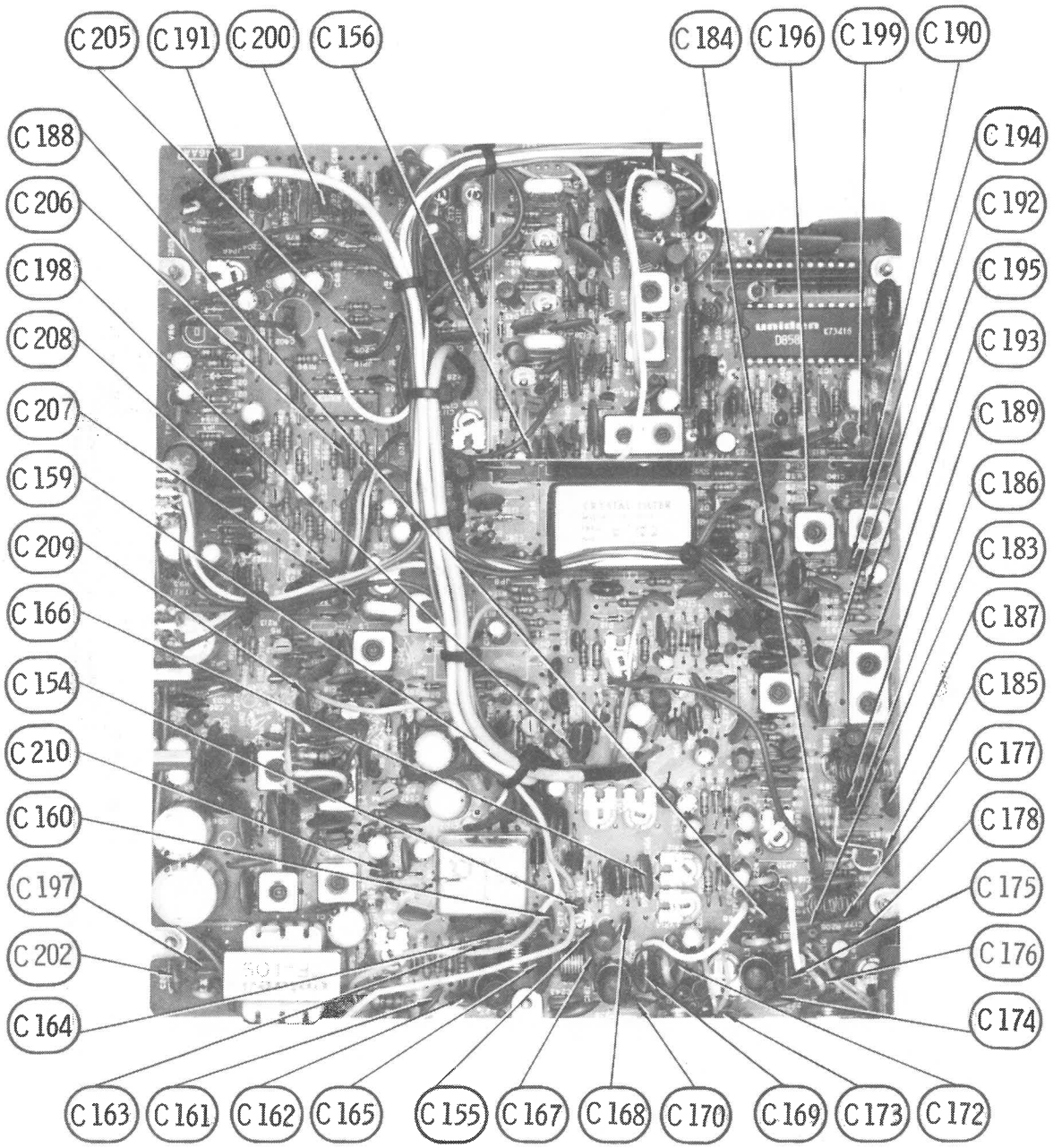
C 205
C 191
C 200
C 156
C 184
C 196
C 199
C 190
C 188
C 206
C 198
C 208
C 207
C 159
C 209
C 166
C 154
C 210
C 160
C 197
C 202
C 164
C 194
C 192
C 195
C 193
C 189
C 186
C 183
C 187
C 185
C 177
C 178
C 175
C 176
C 174
C 163
C 161
C 162
C 165
C 155
C 167
C 168
C 170
C 169
C 173
C 172

MAIN BOARD

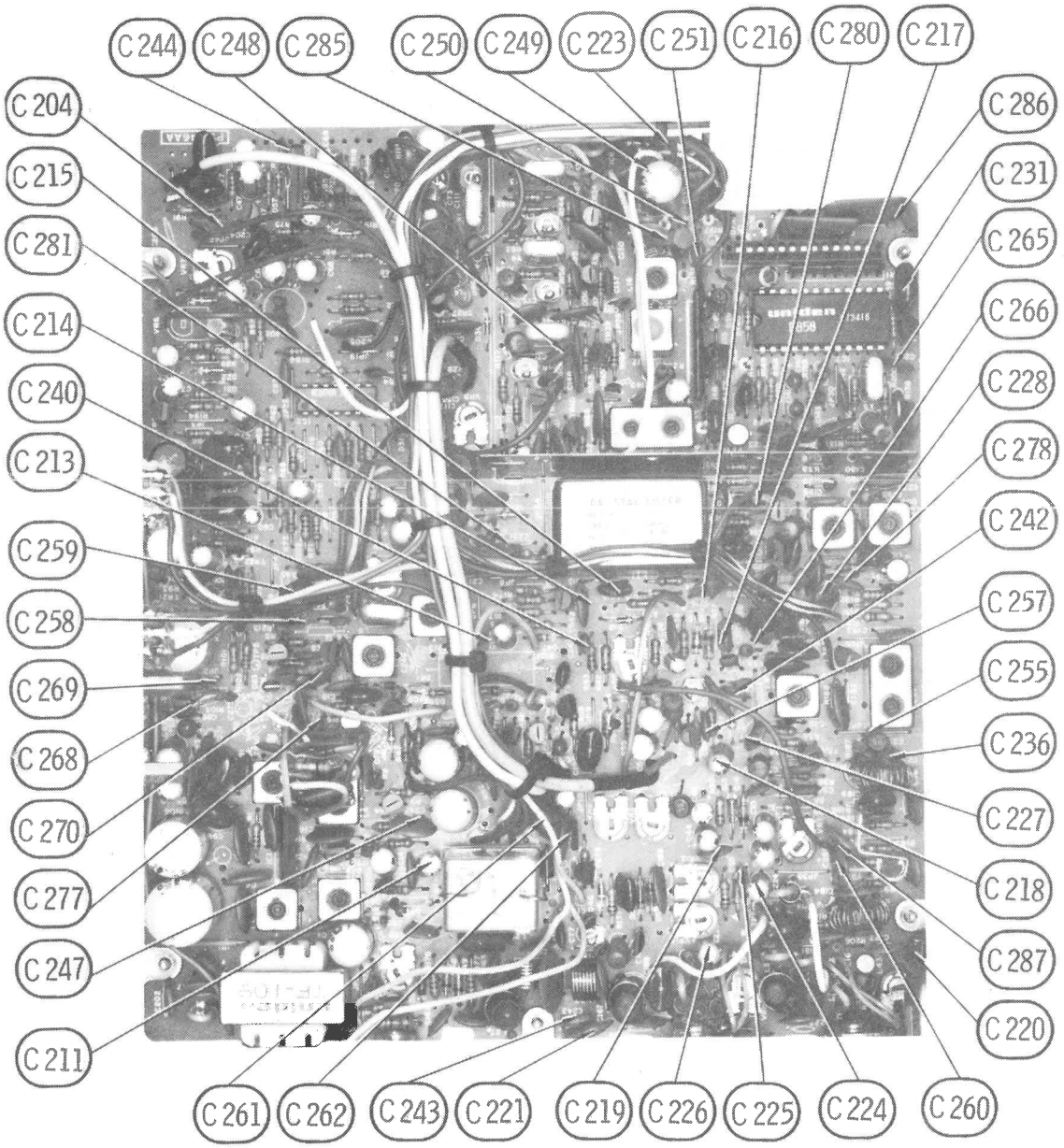
C 244
C 248
C 285
C 250
C 249
C 223
C 251
C 216
C 280
C 217
C 204
C 215
C 281
C 214
C 240
C 213
C 259
C 258
C 269
C 268
C 270
C 277
C 247
C 211
C 286
C 231
C 265
C 266
C 228
C 278
C 242
C 257
C 255
C 236
C 227
C 218
C 287
C 220
C 261
C 262
C 243
C 221
C 219
C 226
C 225
C 224
C 260

MAIN BOARD

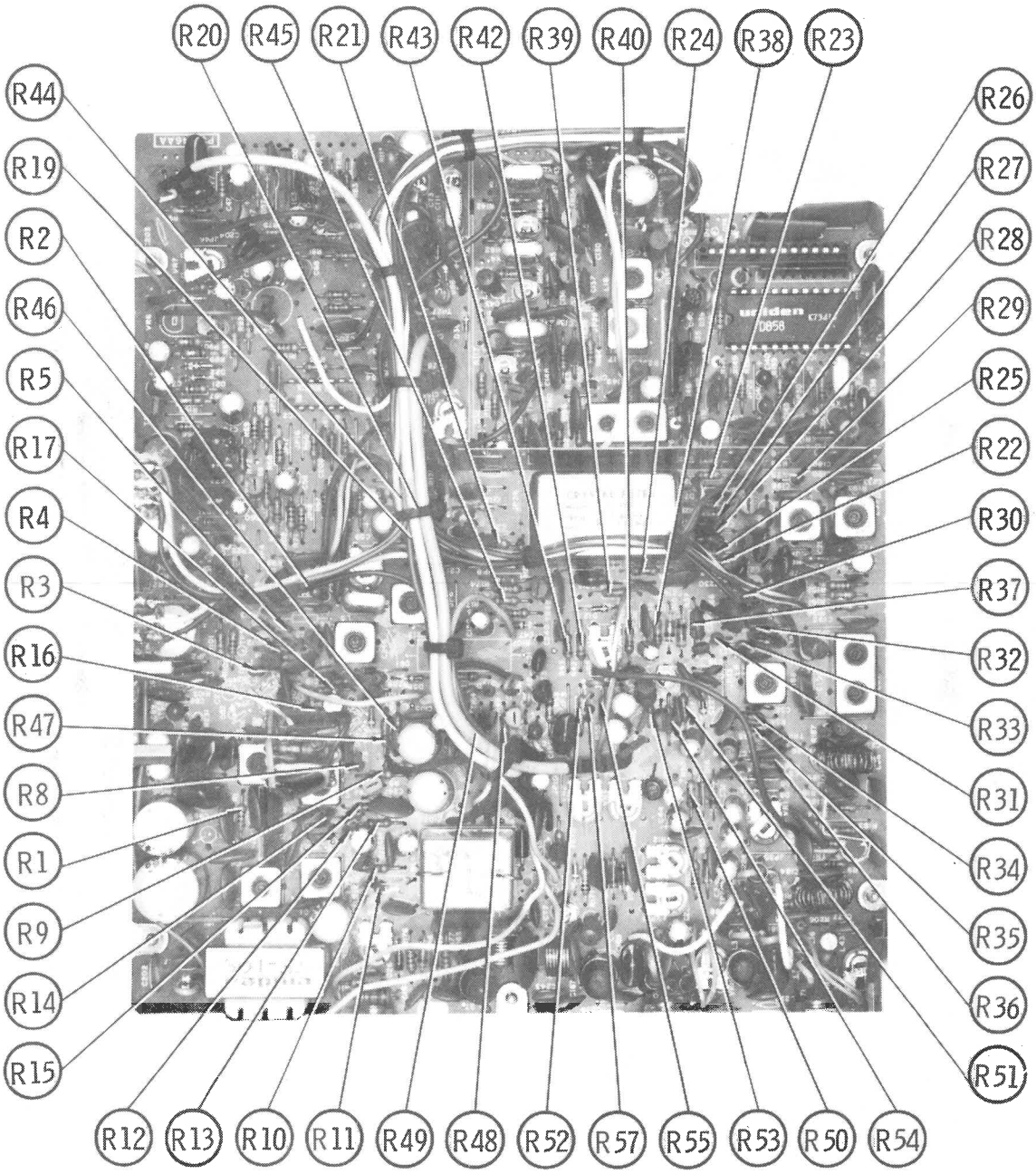
R20
R45
R21
R43
R42
R39
R40
R24
R38
R23
R44
R19
R2
R46
R5
R17
R4
R3
R16
R47
R8
R1
R9
R14
R15
R26
R27
R28
R29
R25
R22
R30
R37
R32
R33
R31
R34
R35
R36
R51
R12
R13
R10
R11
R49
R48
R52
R57
R55
R53
R50
R54

MAIN BOARD

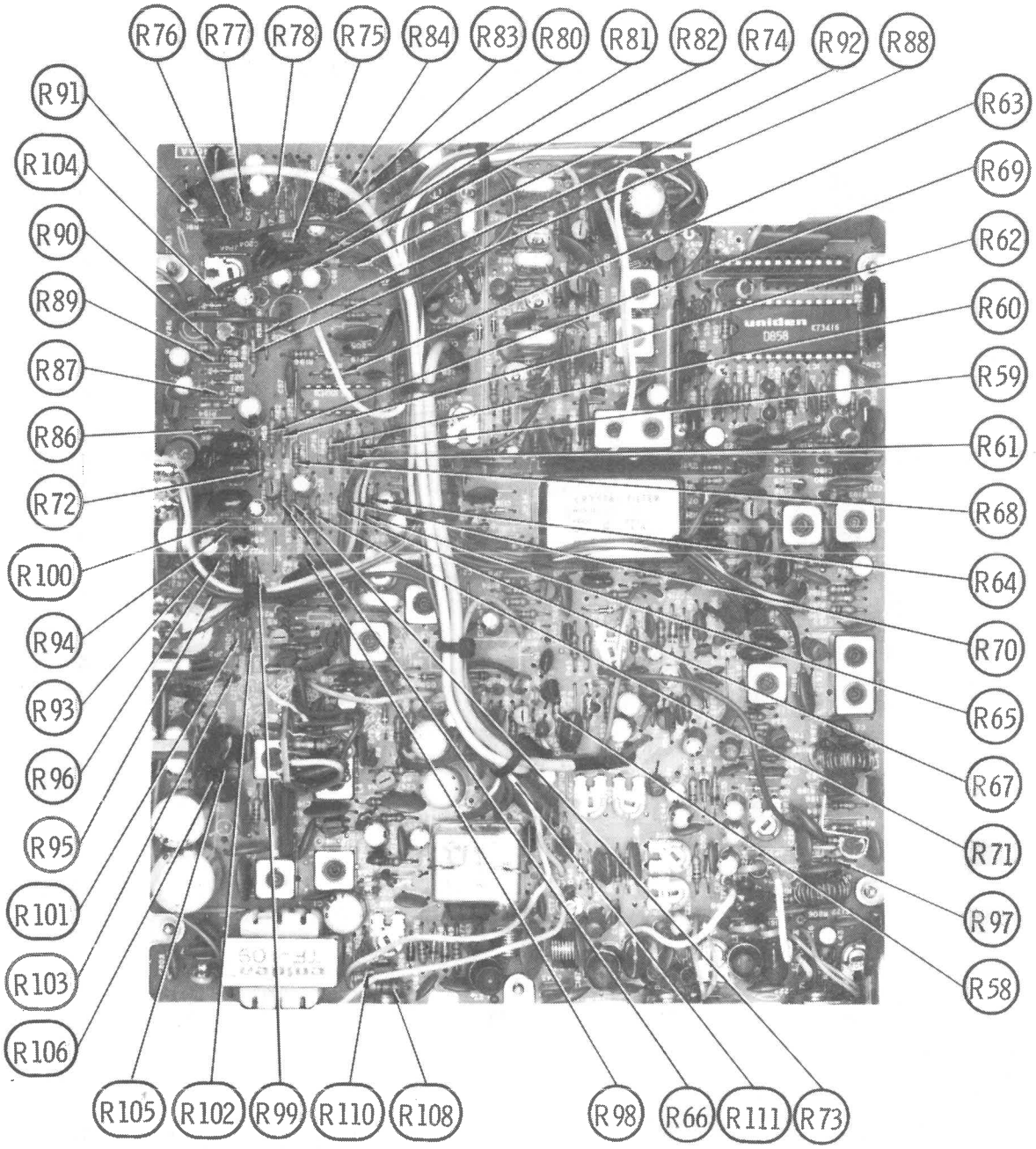
R76
R77
R78
R75
R84
R83
R80
R81
R82
R74
R92
R88
R91
R104
R90
R89
R87
R86
R72
R100
R94
R93
R96
R95
R101
R103
R106
R63
R69
R62
R60
R59
R61
R68
R64
R70
R65
R67
R71
R97
R58
R105
R102
R99
R110
R108
R98
R66
R111
R73

MAIN BOARD

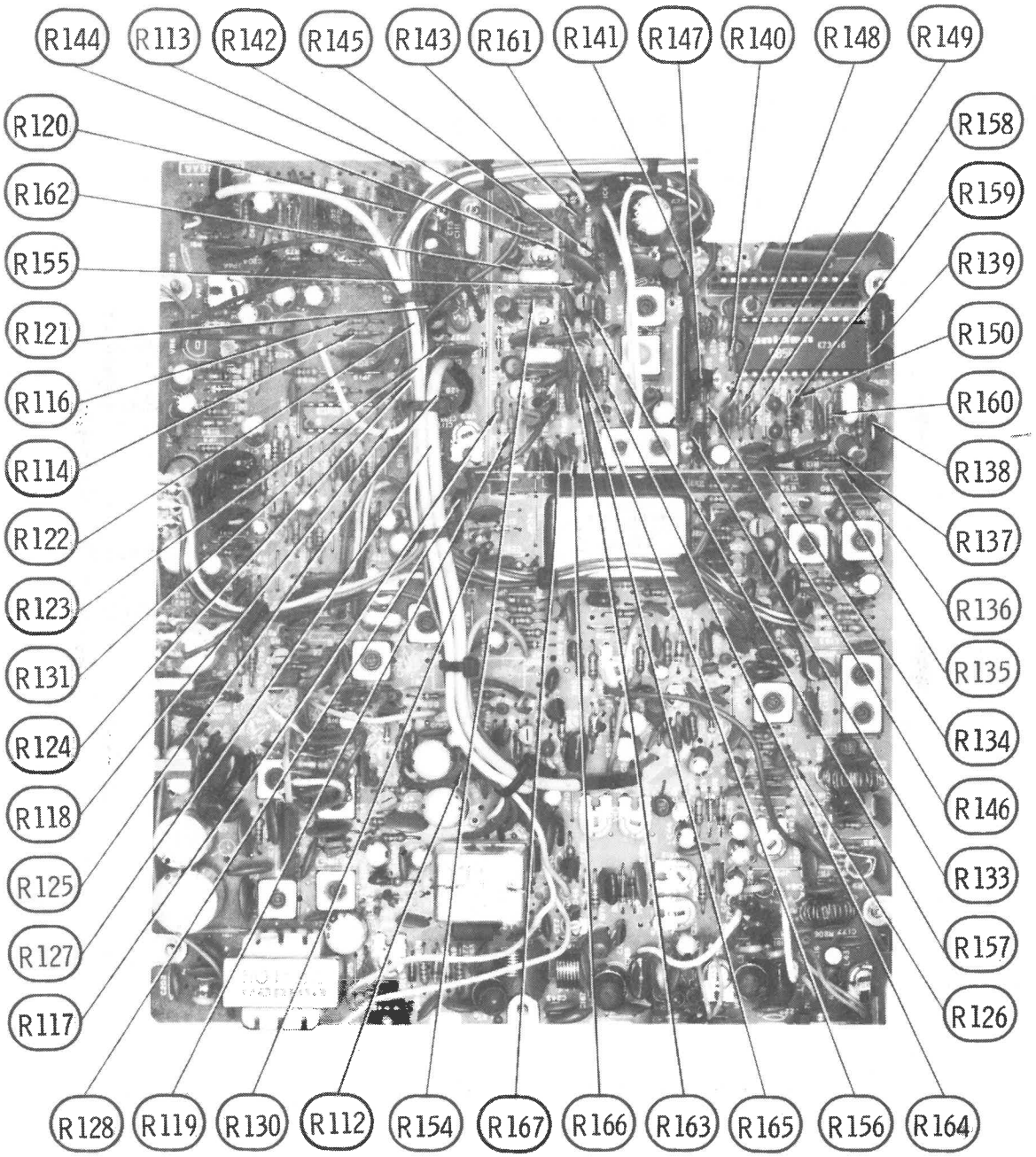
R144
R113
R142
R145
R143
R161
R141
R147
R140
R148
R149
R120
R162
R155
R121
R116
R114
R122
R123
R131
R124
R118
R125
R127
R117
R158
R159
R139
R150
R160
R138
R137
R136
R135
R134
R146
R133
R157
R126
R128
R119
R130
R112
R154
R167
R166
R163
R165
R156
R164

MAIN BOARD

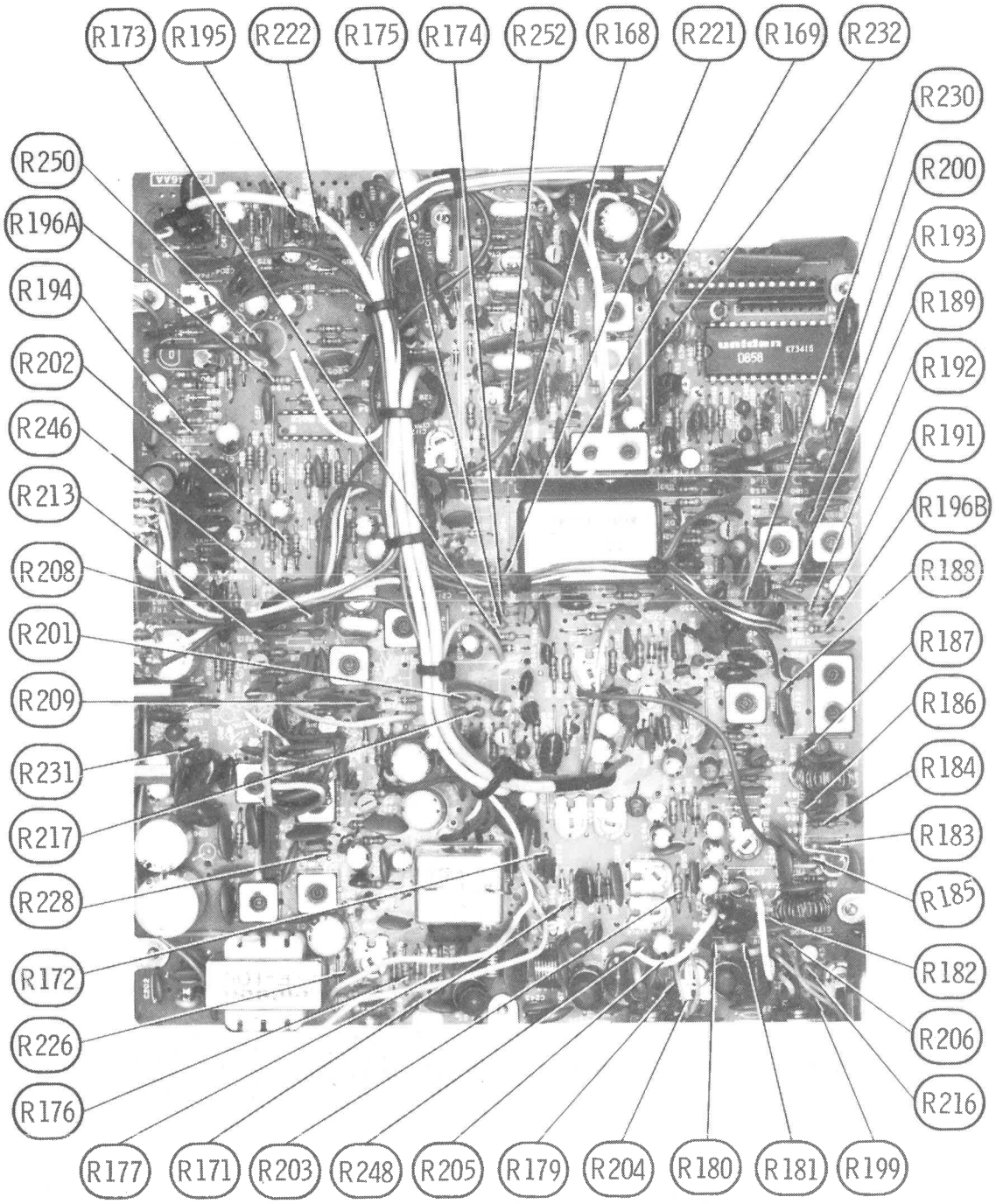
R173
R195
R222
R175
R174
R252
R168
R221
R169
R232
R230
R200
R193
R189
R192
R191
R196B
R188
R187
R186
R184
R183
R185
R182
R206
R216
R199
R181
R180
R204
R179
R205
R248
R203
R171
R177
R176
R226
R172
R228
R217
R231
R209
R201
R208
R213
R246
R202
R194
R196A
R250

MAIN BOARD

A Howard W. Sams CIRCUITRACE® Photo

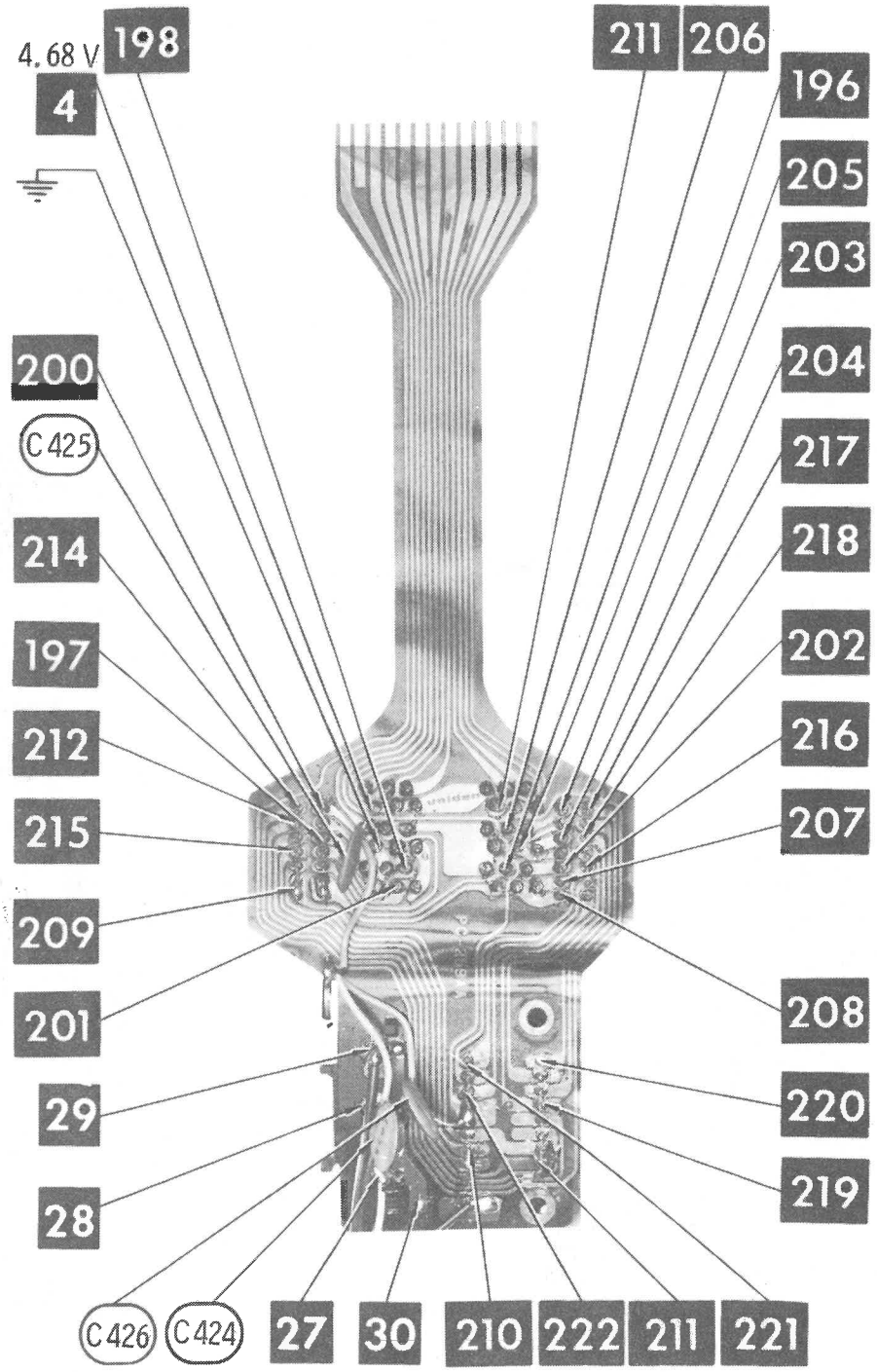

CH. SELECTOR BOARD

A Howard W. Sams CIRCUITRACE® Photo

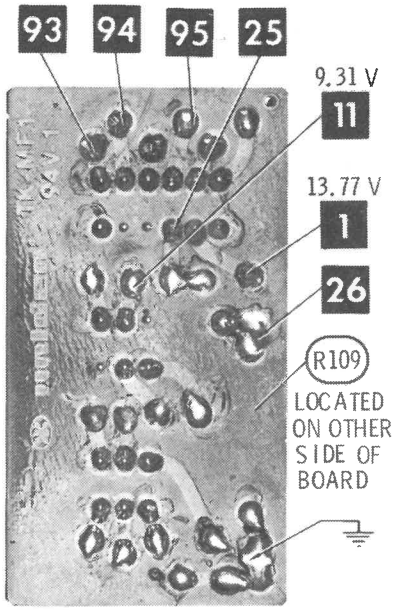

SWITCH BOARD

A Howard W. Sams CIRCUITRACE® Photo

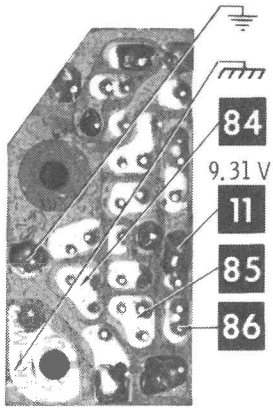

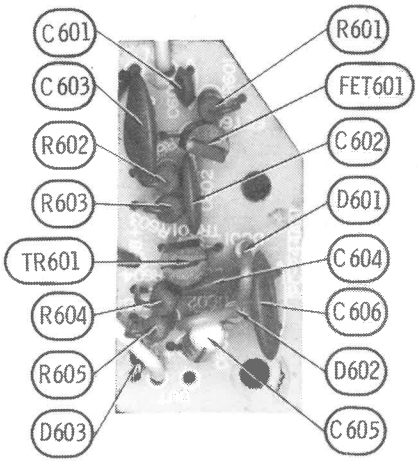

NOISE BLANKER BOARD

A Howard W. Sams CIRCUITRACE® Photo

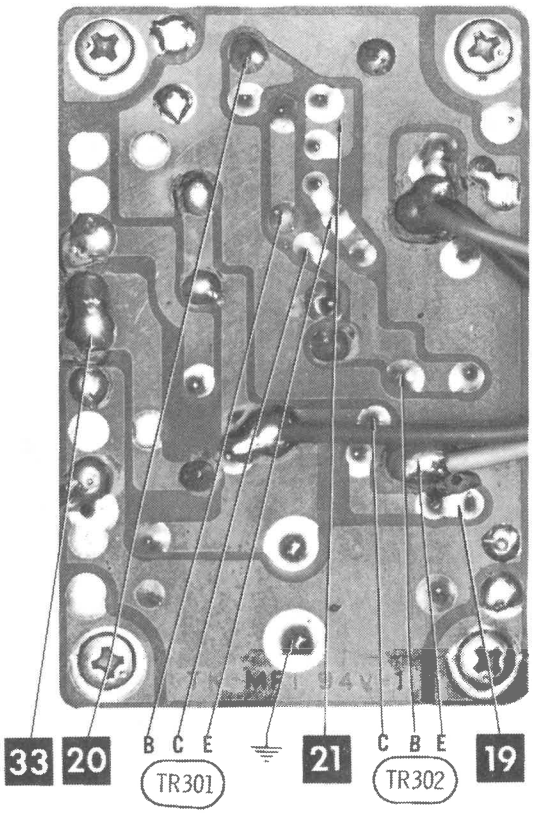

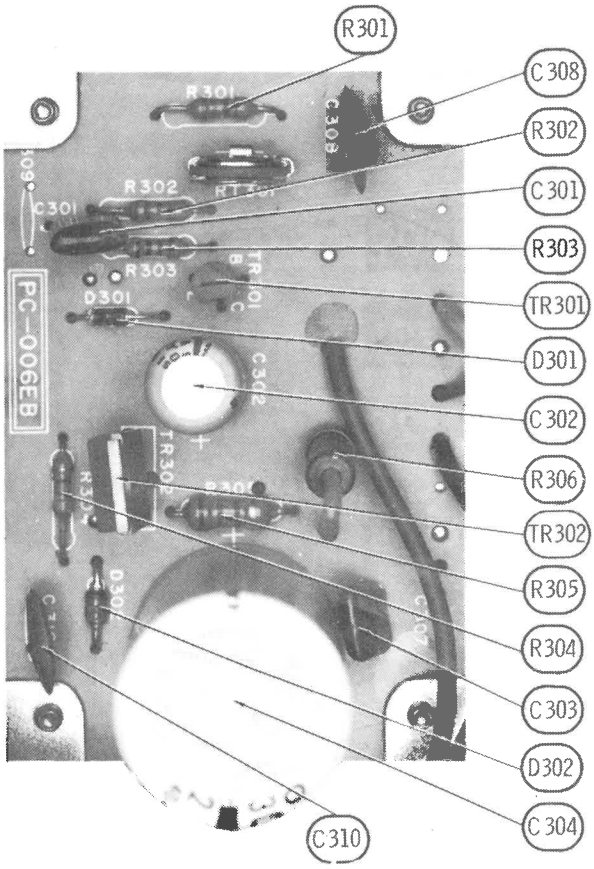

POWER SUPPLY BOARD

TRUTH CHART

1 = 4.68 Volts 0 = 0 Volts

CHANNEL	IC7 PROGRAM DIVIDER PINS 13	14	15	16	17	18	19	20	21	AM REC/TX VCO OUTPUT IN MHz AT TP8	LSB REC/TX VCO OUTPUT IN MHz AT TP8	USB REC/TX VCO OUTPUT IN MHz AT TP8
1	1	0	0	0	1	0	0	1	0	34.765	34.7625	34.7675
2	0	1	0	0	1	0	0	1	0	34.775	34.7725	34.7775
3	1	1	0	0	1	0	0	1	0	34.785	34.7825	34.7875
4	1	0	1	0	1	0	0	1	0	34.705	34.8025	34.8075
5	0	1	1	0	1	0	0	1	0	34.815	34.8125	34.8175
6	1	1	1	0	1	0	0	1	0	34.825	34.8225	34.8275
7	0	0	0	1	1	0	0	1	0	34.835	34.8325	34.8375
8	0	0	0	0	0	0	0	0	1	34.855	34.8525	34.8575
9	1	0	0	0	0	0	0	0	1	34.865	34.8625	34.8675
10	0	1	0	0	0	0	0	0	1	34.875	34.8725	34.8775
11	1	1	0	0	0	0	0	0	1	34.885	34.8825	34.8875
12	1	0	1	0	0	0	0	0	1	34.905	34.9125	34.9075
13	0	1	1	0	0	0	0	0	1	34.915	34.9125	34.9175
14	1	1	1	0	0	0	0	0	1	34.925	34.9225	34.9275
15	0	0	0	1	0	0	0	0	1	34.935	34.9325	34.9375
16	0	0	0	0	1	0	0	0	1	34.955	34.9525	34.9575
17	1	0	0	0	1	0	0	0	1	34.965	34.9625	34.9675
18	0	1	0	0	1	0	0	0	1	34.975	34.9725	34.9775
19	1	1	0	0	1	0	0	0	1	34.985	34.9825	34.9875
20	1	0	1	0	1	0	0	0	1	34.005	35.0025	35.0075
21	0	1	1	0	1	0	0	0	1	34.015	35.0125	35.0175
22	1	1	1	0	1	0	0	0	1	34.025	35.0225	35.0275
23	0	0	0	0	0	1	0	0	1	34.055	35.0525	35.0575
24	0	0	0	1	1	0	0	0	1	34.035	35.0325	35.0375
25	1	0	0	1	1	0	0	0	1	34.045	35.0425	35.0475
26	1	0	0	0	0	1	0	0	1	34.065	35.0625	35.0675
27	0	1	0	0	0	1	0	0	1	34.075	35.0725	35.0775
28	1	1	0	0	0	1	0	0	1	34.085	35.0825	35.0875
29	0	0	1	0	0	1	0	0	1	34.095	35.0925	35.0975
30	1	0	1	0	0	1	0	0	1	34.105	35.1025	35.1075
31	0	1	1	0	0	1	0	0	1	34.115	35.1125	35.1175
32	1	1	1	0	0	1	0	0	1	34.125	35.1225	35.1275
33	0	0	0	1	0	1	0	0	1	34.135	35.1325	35.1375
34	1	0	0	1	0	1	0	0	1	34.145	35.1425	35.1475
35	0	0	0	0	1	1	0	0	1	34.155	35.1525	35.1575
36	1	0	0	0	1	1	0	0	1	34.165	35.1625	35.1675
37	0	1	0	0	1	1	0	0	1	34.175	35.1725	35.1775
38	1	1	0	0	1	1	0	0	1	34.185	35.1825	35.1875
39	0	0	1	0	1	1	0	0	1	34.195	35.1926	35.1975
40	1	0	1	0	1	1	0	0	1	34.205	35.2025	35.2075

AND AM TX

all should be 35.

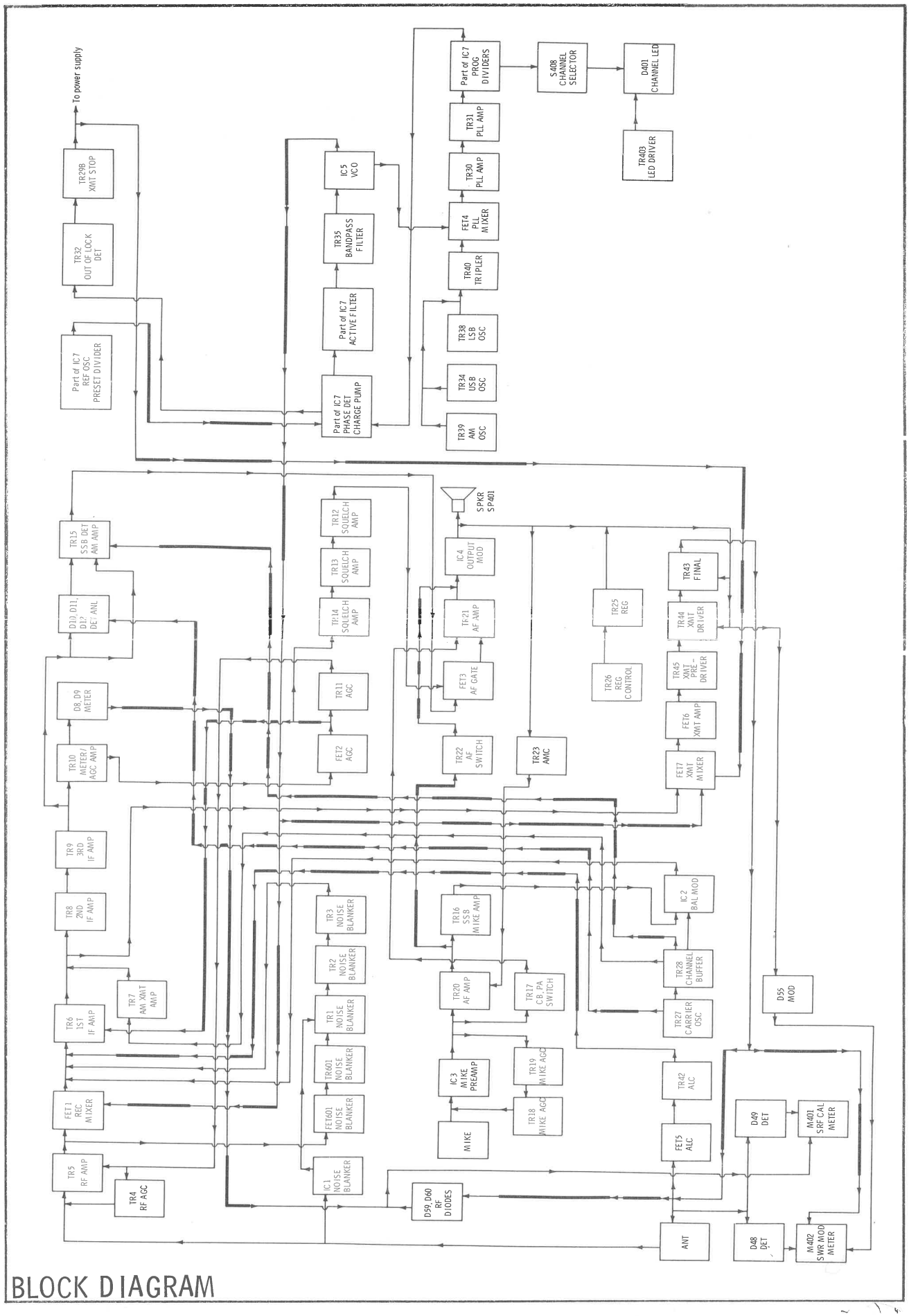

BLOCK DIAGRAM

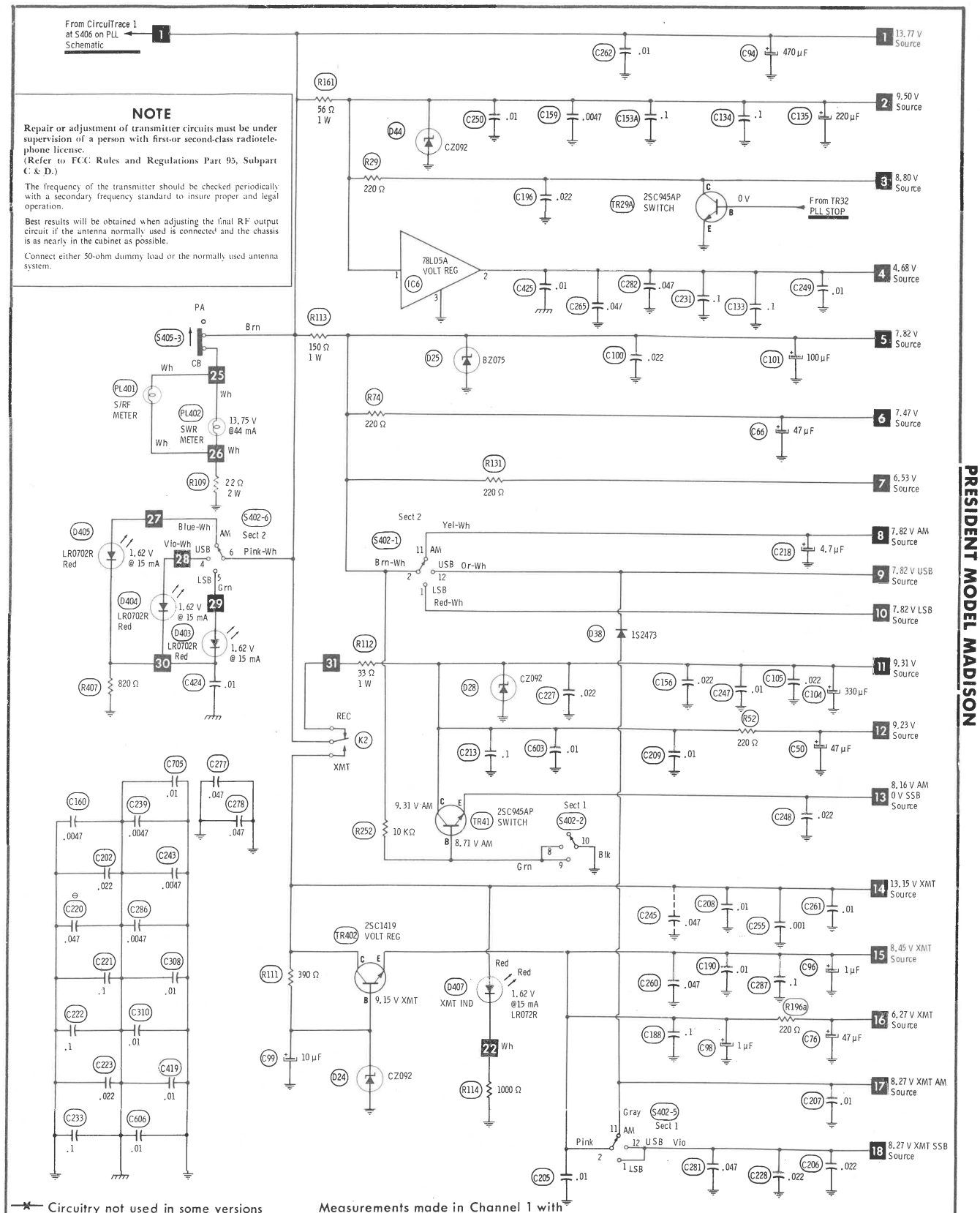

NOTE

Repair or adjustment of transmitter circuits must be under supervision of a person with first-or second-class radiotelephone license.
(Refer to FCC Rules and Regulations Part 95, Subpart C & D.)

The frequency of the transmitter should be checked periodically with a secondary frequency standard to insure proper and legal operation.

Best results will be obtained when adjusting the final RF output circuit if the antenna normally used is connected and the chassis is as nearly in the cabinet as possible.

Connect either 50-ohm dummy load or the normally used antenna system.

- Circuitry not used in some versions
- Circuitry used in some versions
- See parts list
- Nominal value
- Ground
- Chassis
- Common tie point

A PHOTOFACT STANDARD NOTATION SCHEMATIC WITH CIRCUITRACE®

Measurements made in Channel 1 with switching as shown unless noted.
Item numbers in rectangles appear in the alignment/adjustment instructions.
Supply voltage maintained as shown at input.
Voltages measured with digital meter, no signal.
Controls adjusted for normal operation.
Arrow at control indicates direction of advance.
Terminal identification may not be found on unit.
Resistors are 1/2W or less, 5% unless noted.
Value in ( ) used in some versions.

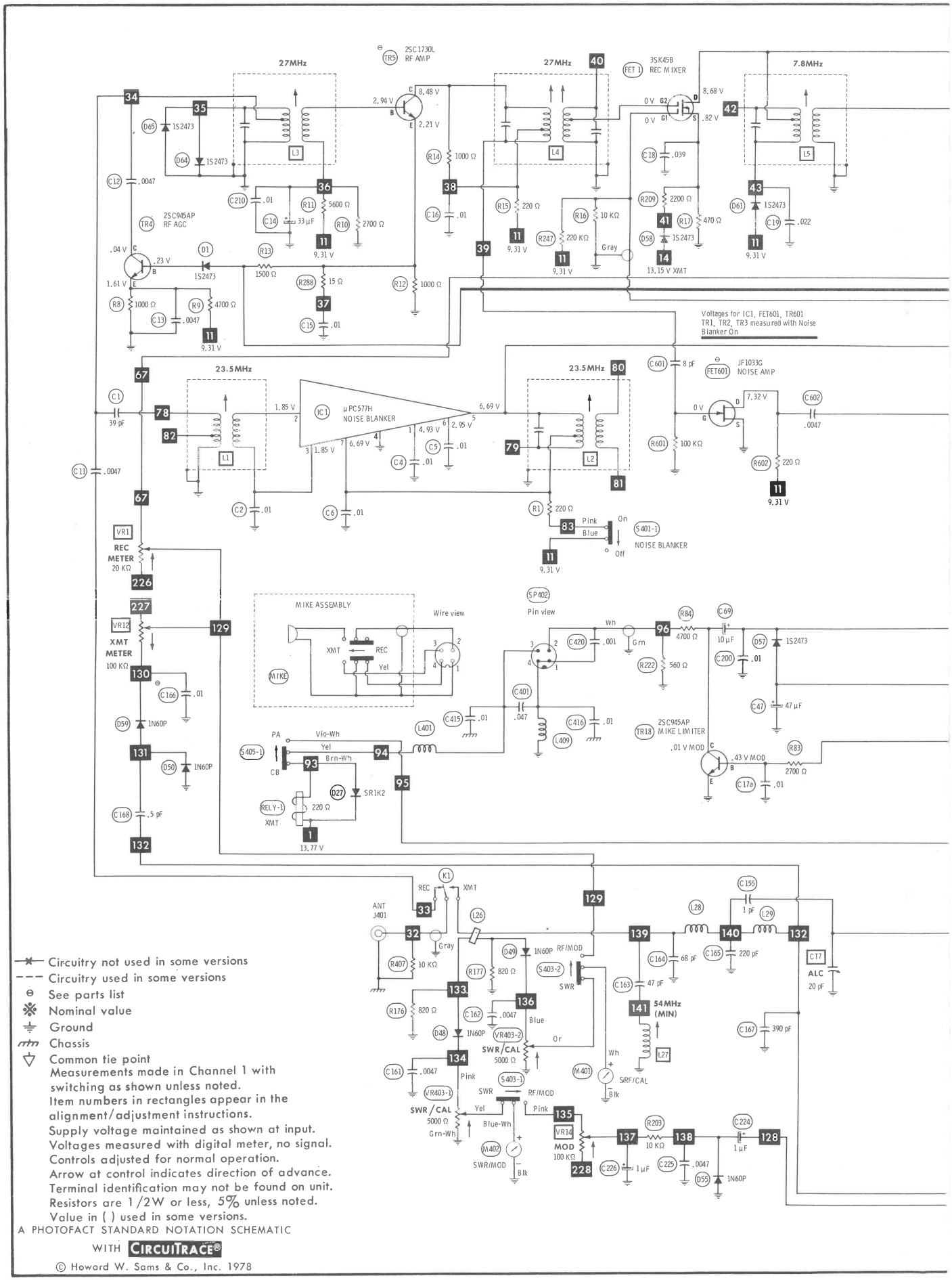

Circuitry not used in some versions
Circuitry used in some versions
See parts list
Nominal value
Ground
Chassis
Common tie point
Measurements made in Channel 1 with switching as shown unless noted.
Item numbers in rectangles appear in the alignment/adjustment instructions.
Supply voltage maintained as shown at input.
Voltages measured with digital meter, no signal.
Controls adjusted for normal operation.
Arrow at control indicates direction of advance.
Terminal identification may not be found on unit.
Resistors are 1/2W or less, 5% unless noted.
Value in ( ) used in some versions.

A PHOTOFACT STANDARD NOTATION SCHEMATIC WITH CIRCUITRACE®

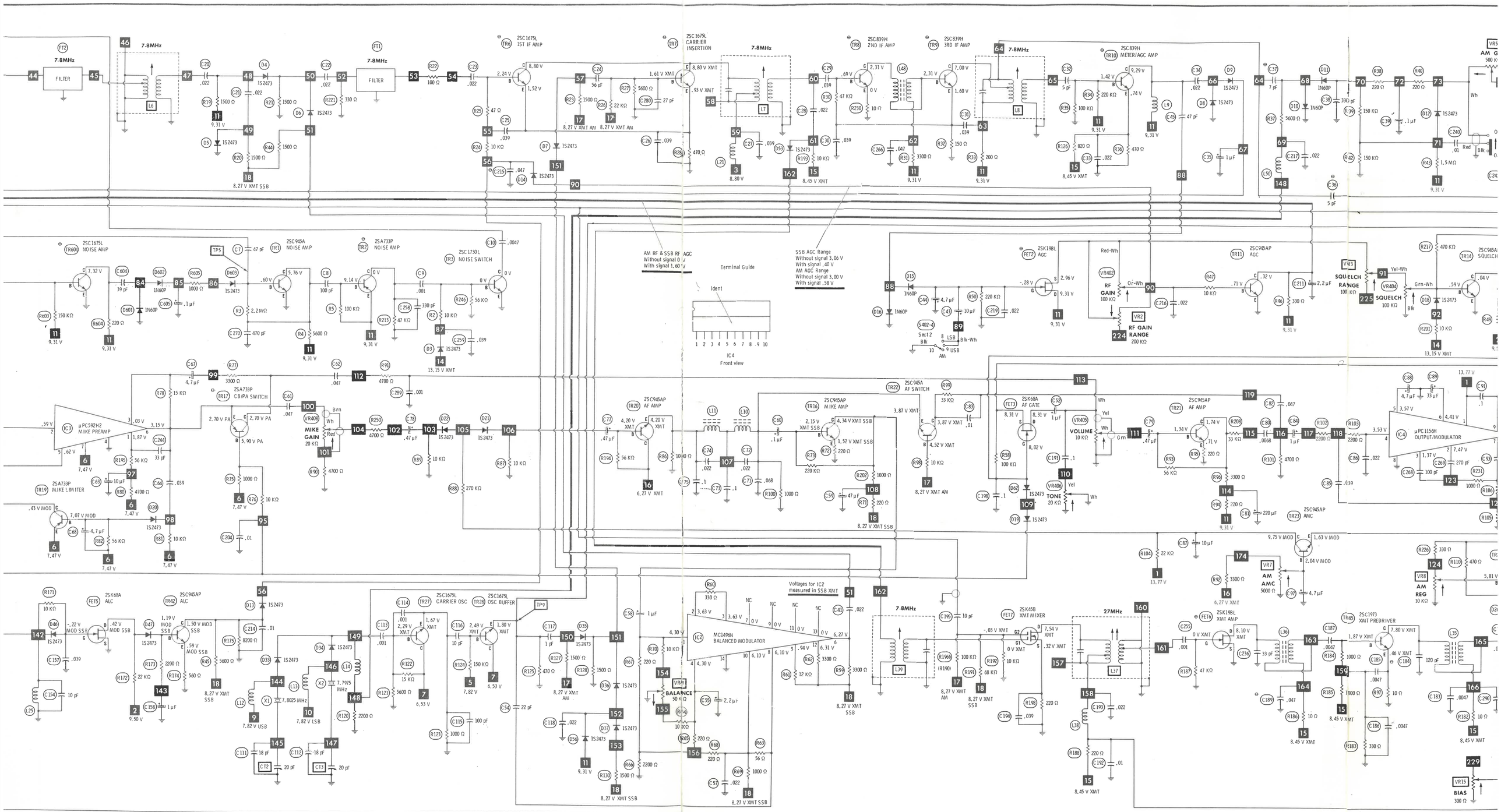
7.8MHz
FILTER
2SC1675L 1ST IF AMP
2SC1675L CARRIER INSERTION
2SC839H 2ND IF AMP
2SC839H 3RD IF AMP
2SC839H METER/AGC AMP
AM G
2SC1675L NOISE AMP
2SC945A NOISE AMP
2SA733P NOISE AMP
2SC1730L NOISE SWITCH
AM RF & SSB RF AGC
Without signal 0 V
With signal 1.60 V
SSB AGC Range
Without signal 3.06 V
With signal .40 V
AM AGC Range
Without signal 3.00 V
With signal .58 V
Terminal Guide
Ident
IC4
Front view
2SK19BL AGC
RF GAIN 100 KΩ
RF GAIN RANGE 200 KΩ
2SC945AP AGC
SQUELCH RANGE 100 KΩ
SQUELCH 100 KΩ
2SC945A SQUELCH
2SC945A AF SWITCH
2SC945AP MIKE AMP
2SK68A AF GATE
2SC945AP AF AMP
μPC1156H OUTPUT/MODULATOR
μPC592H2 MIKE PREAMP
2SA733P CB/PA SWITCH
MIKE GAIN 20 KΩ
VOLUME 10 KΩ
TONE 20 KΩ
2SC945AP AF AMP
2SC945AP AMC
2SA733P MIKE LIMITER
2SK68A ALC
2SC945AP ALC
2SC1675L CARRIER OSC
2SC1675L OSC BUFFER
MC1496N BALANCED MODULATOR
Voltages for IC2 measured in SSB XMT
BALANCE 50 KΩ
2SK45B XMT MIXER
2SK19BL XMT AMP
2SC1973 XMT PREDRIVER
AM AMC 5000 Ω
AM REG 10 KΩ
BIAS 300 Ω

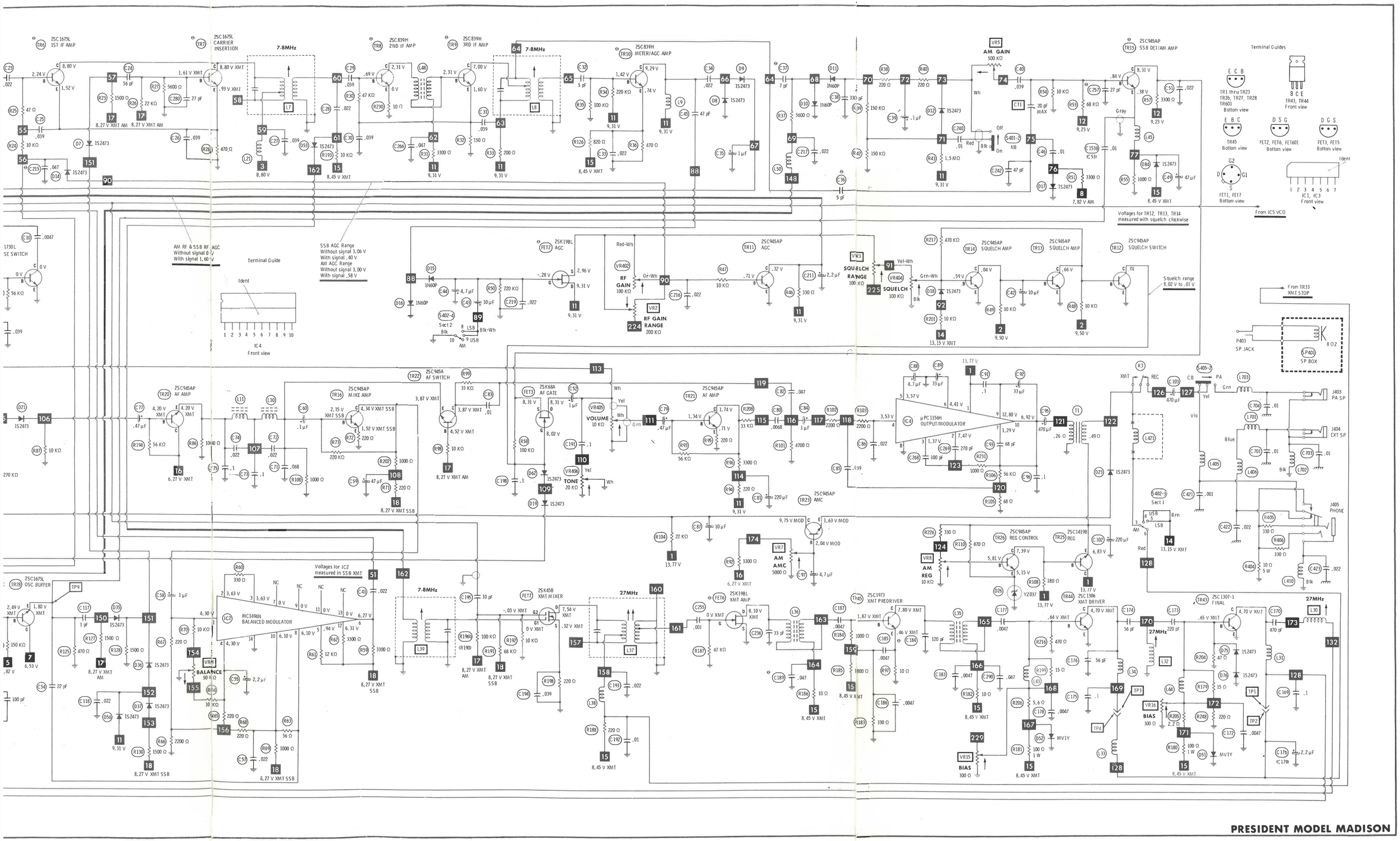
2SC1675L 1ST IF AMP
2SC1675L CARRIER INSERTION
7.8MHz
2SC839H 2ND IF AMP
2SC839H 3RD IF AMP
2SC839H METER/AGC AMP
VR5 AM GAIN 500 KΩ
2SC945AP SSB DET/AM AMP
Terminal Guides
TR1 thru TR23 TR26, TR27, TR28 TR601 Bottom view
TR43, TR44 Front view
TR45 Bottom view
FET2, FET6, FET601 Bottom view
FET3, FET15 Bottom view
FET1, FET17 Bottom view
IC1, IC3 Front view
From IC5 VCO
Voltages for TR12, TR13, TR14 measured with squelch clockwise
AM RF & SSB RF AGC
SSB AGC Range
AM AGC Range
Terminal Guide
IC4 Front view
2SK19BL AGC
RF GAIN 100 KΩ
RF GAIN RANGE 200 KΩ
2SC945AP AGC
SQUELCH RANGE 100 KΩ
SQUELCH 100 KΩ
2SC945AP SQUELCH AMP
2SC945AP SQUELCH SWITCH
Squelch range 8.02 V to .01 V
From TR33 XMT STOP
P403 SP JACK
SP BOX
J403 PA SP
J404 EXT SP
J405 PHONE
2SC945A AF SWITCH
2SC945AP AF AMP
2SC945AP MIKE AMP
2SK68A AF GATE
VOLUME 10 KΩ
TONE 20 KΩ
2SC945AP AF AMP
2SC945AP AMC
μPC1156H OUTPUT/MODULATOR
2SC945AP REG CONTROL
2SC1419B REG
AM AMC 5000 Ω
AM REG 10 KΩ
2SC1675L OSC BUFFER
MC1496N BALANCED MODULATOR
Voltages for IC2 measured in SSB XMT
BALANCE 50 KΩ
2SK45B XMT MIXER
2SK19BL XMT AMP
2SC1973 XMT PREDRIVER
2SC1307-1 FINAL
2SC130K XMT DRIVER
BIAS 300 Ω
IC17b
PRESIDENT MODEL MADISON

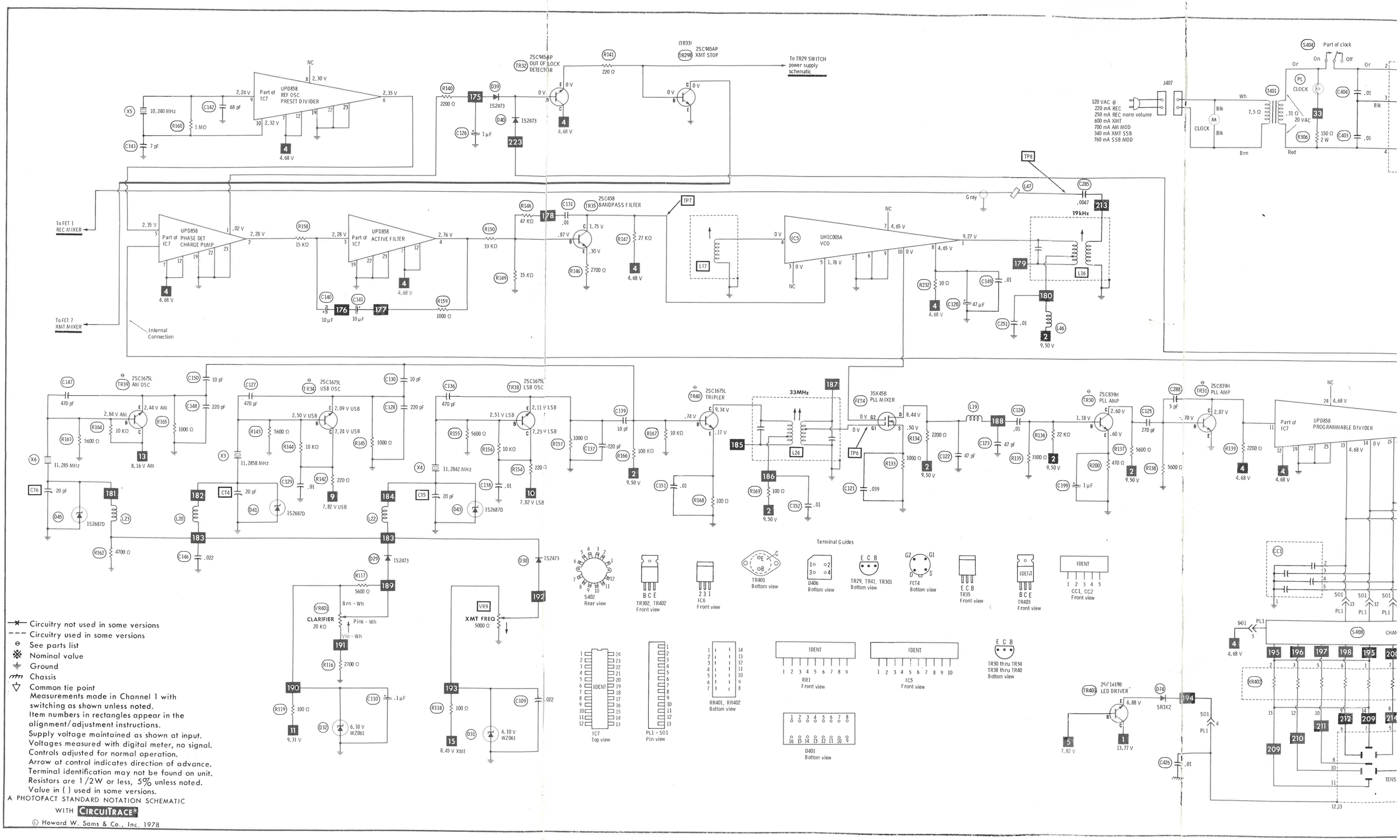

- Circuitry not used in some versions
- Circuitry used in some versions
- See parts list
- Nominal value
- Ground
- Chassis
- Common tie point

Measurements made in Channel 1 with switching as shown unless noted.
Item numbers in rectangles appear in the alignment/adjustment instructions.
Supply voltage maintained as shown at input.
Voltages measured with digital meter, no signal.
Controls adjusted for normal operation.
Arrow at control indicates direction of advance.
Terminal identification may not be found on unit.
Resistors are 1/2W or less, 5% unless noted.
Value in ( ) used in some versions.

A PHOTOFACT STANDARD NOTATION SCHEMATIC
WITH CIRCUITRACE®

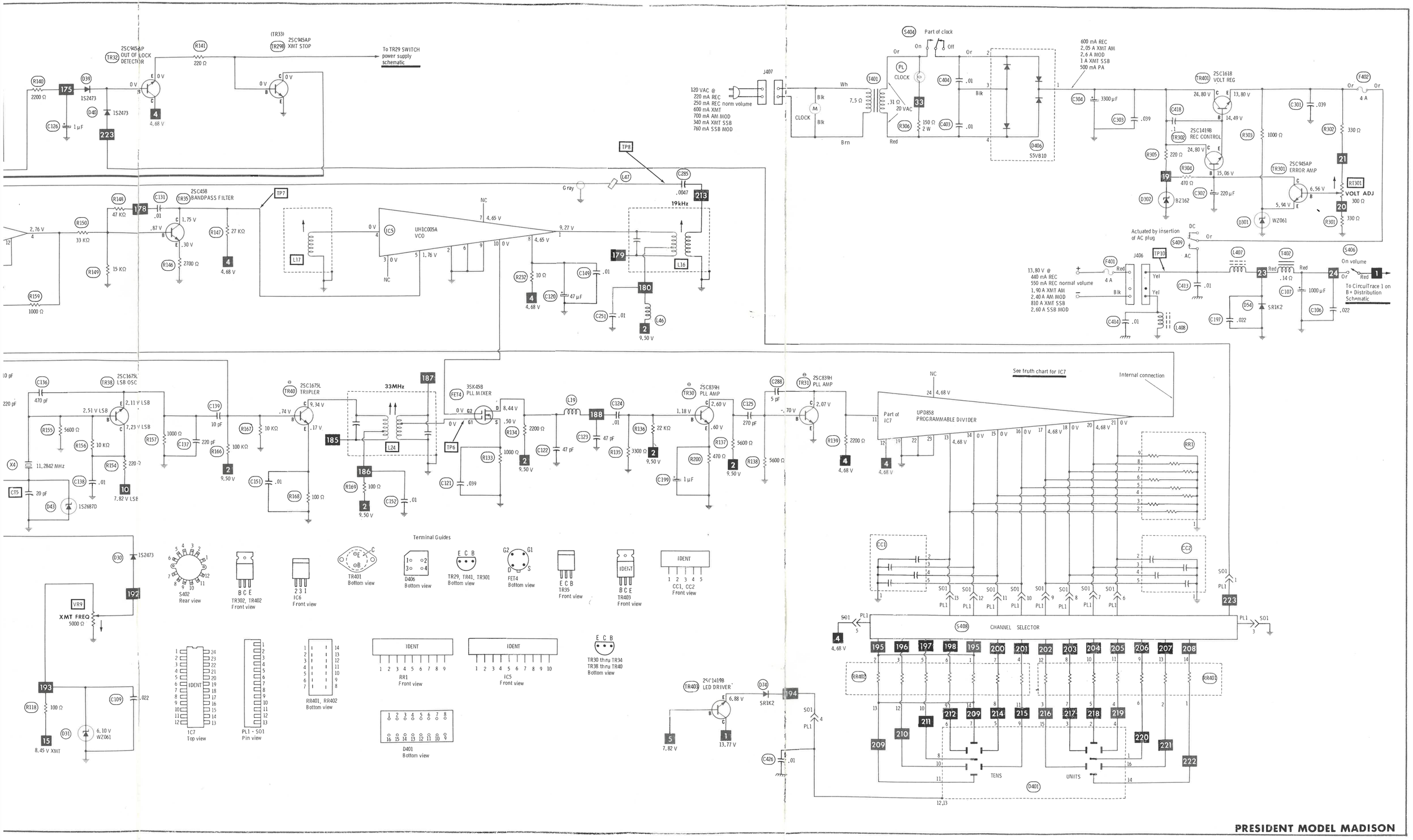
2SC945AP OUT OF LOCK DETECTOR
(TR33) 2SC945AP XMT STOP
To TR29 SWITCH power supply schematic
120 VAC @ 220 mA REC 250 mA REC norm volume 600 mA XMT 700 mA AM MOD 340 mA XMT SSB 760 mA SSB MOD
Part of clock
600 mA REC 2.05 A XMT AM 2.6 A MOD 1 A XMT SSB 500 mA PA
2SC1618 VOLT REG
2SC1419B REC CONTROL
2SC945AP ERROR AMP
VOLT ADJ
Actuated by insertion of AC plug
13.80 V @ 440 mA REC 550 mA REC normal volume 1.90 A XMT AM 2.40 A AM MOD 810 A XMT SSB 2.60 A SSB MOD
To CircuiTrace 1 on B+ Distribution Schematic
2SC458 BANDPASS FILTER
UH1C005A VCO
19kHz
2SC1675L LSB OSC
2SC1675L TRIPLER
33MHz
3SK45B PLL MIXER
2SC839H PLL AMP
See truth chart for IC7
Internal connection
UPD858 PROGRAMMABLE DIVIDER
Terminal Guides
CHANNEL SELECTOR
TENS
UNITS
XMT FREQ 5000 Ω
2SC1419B LED DRIVER
PRESIDENT MODEL MADISON

PARTS LIST AND DESCRIPTION

(When ordering parts, state Model, Part Number, and Description.)

SEMICONDUCTORS (Select replacement transistor for best results)

ITEM No.	TYPE No.	MFGR. PART No.	REPLACEMENT DATA									
			GENERAL ELECTRIC PART No.	MALLORY PART No.	MOTOROLA PART No.	RAYTHEON PART No.	RCA PART No.	SPRAGUE PART No.	SYLVANIA PART No.	THORDARSON PART No.	WORKMAN PART No.	ZENITH PART No.
D1	1S2473	2000-317	GE-300	PTC214	HEPR0602	RE 52	SK3100	RT-218	ECG177		WEP1062	
	1S1588		GE-300	PTC214	HEPR0602	RE 52	SK3100	RT-218	ECG177		WEP1062	
	1S2472		GE-300	PTC214	HEPR0602	RE 52	SK3100	RT-218	ECG177		WEP1062	
D3	1S2473	2000-317	GE-300	PTC214	HEPR0602	RE 52	SK3100	RT-218	ECG177		WEP1062	
	1S1588		GE-300	PTC214	HEPR0602	RE 52	SK3100	RT-218	ECG177		WEP1062	
	1S2472		GE-300	PTC214	HEPR0602	RE 52	SK3100	RT-218	ECG177		WEP1062	
D4	1S2473	2000-317	GE-300	PTC214	HEPR0602	RE 52	SK3100	RT-218	ECG177		WEP1062	
	1S1588		GE-300	PTC214	HEPR0602	RE 52	SK3100	RT-218	ECG177		WEP1062	
	1S2472		GE-300	PTC214	HEPR0602	RE 52	SK3100	RT-218	ECG177		WEP1062	
D5	1S2473	2000-317	GE-300	PTC214	HEPR0602	RE 52	SK3100	RT-218	ECG177		WEP1062	
	1S1588		GE-300	PTC214	HEPR0602	RE 52	SK3100	RT-218	ECG177		WEP1062	
	1S2472		GE-300	PTC214	HEPR0602	RE 52	SK3100	RT-218	ECG177		WEP1062	
D6	1S2473	2000-317	GE-300	PTC214	HEPR0602	RE 52	SK3100	RT-218	ECG177		WEP1062	
	1S1588		GE-300	PTC214	HEPR0602	RE 52	SK3100	RT-218	ECG177		WEP1062	
	1S2472		GE-300	PTC214	HEPR0602	RE 52	SK3100	RT-218	ECG177		WEP1062	
D7	1S2473	2000-317	GE-300	PTC214	HEPR0602	RE 52	SK3100	RT-218	ECG177		WEP1062	
	1S1588		GE-300	PTC214	HEPR0602	RE 52	SK3100	RT-218	ECG177		WEP1062	
	1S2472		GE-300	PTC214	HEPR0602	RE 52	SK3100	RT-218	ECG177		WEP1062	
D8	1S2473	2000-317	GE-300	PTC214	HEPR0602	RE 52	SK3100	RT-218	ECG177		WEP1062	
	1S1588		GE-300	PTC214	HEPR0602	RE 52	SK3100	RT-218	ECG177		WEP1062	
	1S2472		GE-300	PTC214	HEPR0602	RE 52	SK3100	RT-218	ECG177		WEP1062	
D9	1S2473	2000-317	GE-300	PTC214	HEPR0602	RE 52	SK3100	RT-218	ECG177		WEP1062	
	1S1588		GE-300	PTC214	HEPR0602	RE 52	SK3100	RT-218	ECG177		WEP1062	
	1S2472		GE-300	PTC214	HEPR0602	RE 52	SK3100	RT-218	ECG177		WEP1062	
D10	1N60P	2000-318	1N60	PTC206	HEPR9135	RE 47	SK3088	RT-263	ECG109	1N60	WEP134	ZEN-430
	1N60		1N60	PTC206	HEPR9135	RE 47	SK3088	RT-263	ECG109	1N60	WEP134	ZEN-430
D11	1N60P		1N60	PTC206	HEPR9135	RE 47	SK3088	RT-263	ECG109	1N60	WEP134	ZEN-430
	1N60	2000-318	1N60	PTC206	HEPR9135	RE 47	SK3088	RT-263	ECG109	1N60	WEP134	ZEN-430
D12	1S2473	2000-317	GE-300	PTC214	HEPR0602	RE 52	SK3100	RT-218	ECG177		WEP1062	
	1S1588		GE-300	PTC214	HEPR0602	RE 52	SK3100	RT-218	ECG177		WEP1062	
	1S2472		GE-300	PTC214	HEPR0602	RE 52	SK3100	RT-218	ECG177		WEP1062	
D13	1S2473	2000-317	GE-300	PTC214	HEPR0602	RE 52	SK3100	RT-218	ECG177		WEP1062	
	1S1588		GE-300	PTC214	HEPR0602	RE 52	SK3100	RT-218	ECG177		WEP1062	
	1S2472		GE-300	PTC214	HEPR0602	RE 52	SK3100	RT-218	ECG177		WEP1062	
D14	1S2473	2000-317	GE-300	PTC214	HEPR0602	RE 52	SK3100	RT-218	ECG177		WEP1062	
	1S1588		GE-300	PTC214	HEPR0602	RE 52	SK3100	RT-218	ECG177		WEP1062	
	1S2472		GE-300	PTC214	HEPR0602	RE 52	SK3100	RT-218	ECG177		WEP1062	
D15	1N60P	2000-318	1N60	PTC206	HEPR9135	RE 47	SK3088	RT-263	ECG109	1N60	WEP134	ZEN-430
	1N60		1N60	PTC206	HEPR9135	RE 47	SK3088	RT-263	ECG109	1N60	WEP134	ZEN-430
D16	1N60P	2000-318	1N60	PTC206	HEPR9135	RE 47	SK3088	RT-263	ECG109	1N60	WEP134	ZEN-430
	1N60		1N60	PTC206	HEPR9135	RE 47	SK3088	RT-263	ECG109	1N60	WEP134	ZEN-430
D17	1S2473	2000-317	GE-300	PTC214	HEPR0602	RE 52	SK3100	RT-218	ECG177		WEP1062	
	1S1588		GE-300	PTC214	HEPR0602	RE 52	SK3100	RT-218	ECG177		WEP1062	
	1S2472		GE-300	PTC214	HEPR0602	RE 52	SK3100	RT-218	ECG177		WEP1062	
D18	1S2473	2000-317	GE-300	PTC214	HEPR0602	RE 52	SK3100	RT-218	ECG177		WEP1062	
	1S1588		GE-300	PTC214	HEPR0602	RE 52	SK3100	RT-218	ECG177		WEP1062	
	1S2472		GE-300	PTC214	HEPR0602	RE 52	SK3100	RT-218	ECG177		WEP1062	
D19	1S2473	2000-317	GE-300	PTC214	HEPR0602	RE 52	SK3100	RT-218	ECG177		WEP1062	
	1S1588		GE-300	PTC214	HEPR0602	RE 52	SK3100	RT-218	ECG177		WEP1062	
	1S2472		GE-300	PTC214	HEPR0602	RE 52	SK3100	RT-218	ECG177		WEP1062	
D20	1S2473	2000-317	GE-300	PTC214	HEPR0602	RE 52	SK3100	RT-218	ECG177		WEP1062	
	1S1588		GE-300	PTC214	HEPR0602	RE 52	SK3100	RT-218	ECG177		WEP1062	
	1S2472		GE-300	PTC214	HEPR0602	RE 52	SK3100	RT-218	ECG177		WEP1062	
D21	1S2473	2000-317	GE-300	PTC214	HEPR0602	RE 52	SK3100	RT-218	ECG177		WEP1062	
	1S1588		GE-300	PTC214	HEPR0602	RE 52	SK3100	RT-218	ECG177		WEP1062	
	1S2472		GE-300	PTC214	HEPR0602	RE 52	SK3100	RT-218	ECG177		WEP1062	
D22	1S2473	2000-317	GE-300	PTC214	HEPR0602	RE 52	SK3100	RT-218	ECG177		WEP1062	
	1S1588		GE-300	PTC214	HEPR0602	RE 52	SK3100	RT-218	ECG177		WEP1062	
	1S2472		GE-300	PTC214	HEPR0602	RE 52	SK3100	RT-218	ECG177		WEP1062	
D23	1S2473	2000-317	GE-300	PTC214	HEPR0602	RE 52	SK3100	RT-218	ECG177		WEP1062	
	1S1588		GE-300	PTC214	HEPR0602	RE 52	SK3100	RT-218	ECG177		WEP1062	
	1S2472		GE-300	PTC214	HEPR0602	RE 52	SK3100	RT-218	ECG177		WEP1062	
D24	CZ092	2000-327	GEZD-9.1	ZB9.1A	HEPZ0412	RE 114	SK3060	RT-240	ECG139	1N4739A	WEP1109	103-272
D25	BZ075	2000-325	GEZD-7.5	ZB7.5B		RE 111		RT-239	ECG138A	1N4737A	WEP1107	ZEN-505
D26	YZ037	2000-338	GEZD-3.9			RE 102	SK3331		ECG5067A		WEP1100	
D27	SR1K2	2000-320	GE-504A	PTC201	HEPR0052	RE 49	SK3030	RT-213	ECG116	1N4004	WEP156	212-61
D28	CZ092	2000-327	GEZD-9.1	ZB9.1A	HEPZ0412	RE 114	SK3060	RT-240	ECG139	1N4739A	WEP1109	103-272
D29	1S2473	2000-317	GE-300	PTC214	HEPR0602	RE 52	SK3100	RT-218	ECG177		WEP1062	
	1S1588		GE-300	PTC214	HEPR0602	RE 52	SK3100	RT-218	ECG177		WEP1062	
	1S2472		GE-300	PTC214	HEPR0602	RE 52	SK3100	RT-218	ECG177		WEP1062	
D30	1S2473	2000-317	GE-300	PTC214	HEPR0602	RE 52	SK3100	RT-218	ECG177		WEP1062	
	1S1588		GE-300	PTC214	HEPR0602	RE 52	SK3100	RT-218	ECG177		WEP1062	
	1S2472		GE-300	PTC214	HEPR0602	RE 52	SK3100	RT-218	ECG177		WEP1062	
D31	WZ061	2000-324	GEZD-6.2	ZB6.2B		RE 109		RT-237	ECG137A	1N4735A	WEP1154	
D32	WZ061	2000-322	GEZD-6.2	ZB6.2B		RE 109		RT-237	ECG137A	1N4735A	WEP1154	
D33	1S2473	2000-317	GE-300	PTC214	HEPR0602	RE 52	SK3100	RT-218	ECG177		WEP1062	
	1S1588		GE-300	PTC214	HEPR0602	RE 52	SK3100	RT-218	ECG177		WEP1062	
	1S2472		GE-300	PTC214	HEPR0602	RE 52	SK3100	RT-218	ECG177		WEP1062	
D34	1S2473	2000-317	GE-300	PTC214	HEPR0602	RE 52	SK3100	RT-218	ECG177		WEP1062	
	1S1588		GE-300	PTC214	HEPR0602	RE 52	SK3100	RT-218	ECG177		WEP1062	
	1S2472		GE-300	PTC214	HEPR0602	RE 52	SK3100	RT-218	ECG177		WEP1062	
D35	1S2473	2000-317	GE-300	PTC214	HEPR0602	RE 52	SK3100	RT-218	ECG177		WEP1062	
	1S1588		GE-300	PTC214	HEPR0602	RE 52	SK3100	RT-218	ECG177		WEP1062	
	1S2472		GE-300	PTC214	HEPR0602	RE 52	SK3100	RT-218	ECG177		WEP1062	
D36	1S2473	2000-317	GE-300	PTC214	HEPR0602	RE 52	SK3100	RT-218	ECG177		WEP1062	
	1S1588		GE-300	PTC214	HEPR0602	RE 52	SK3100	RT-218	ECG177		WEP1062	
	1S2472		GE-300	PTC214	HEPR0602	RE 52	SK3100	RT-218	ECG177		WEP1062	
D37	1S2473	2000-317	GE-300	PTC214	HEPR0602	RE 52	SK3100	RT-218	ECG177		WEP1062	
	1S1588		GE-300	PTC214	HEPR0602	RE 52	SK3100	RT-218	ECG177		WEP1062	
	1S2472		GE-300	PTC214	HEPR0602	RE 52	SK3100	RT-218	ECG177		WEP1062	
D38	1S2473	2000-317	GE-300	PTC214	HEPR0602	RE 52	SK3100	RT-218	ECG177		WEP1062	
	1S1588		GE-300	PTC214	HEPR0602	RE 52	SK3100	RT-218	ECG177		WEP1062	
	1S2472		GE-300	PTC214	HEPR0602	RE 52	SK3100	RT-218	ECG177		WEP1062	
D39	1S2473	2000-317	GE-300	PTC214	HEPR0602	RE 52	SK3100	RT-218	ECG177		WEP1062	
	1S1588		GE-300	PTC214	HEPR0602	RE 52	SK3100	RT-218	ECG177		WEP1062	
	1S2472		GE-300	PTC214	HEPR0602	RE 52	SK3100	RT-218	ECG177		WEP1062	
D40	1S2473	2000-317	GE-300	PTC214	HEPR0602	RE 52	SK3100	RT-218	ECG177		WEP1062	
	1S1588		GE-300	PTC214	HEPR0602	RE 52	SK3100	RT-218	ECG177		WEP1062	
	1S2472		GE-300	PTC214	HEPR0602	RE 52	SK3100	RT-218	ECG177		WEP1062	

PARTS LIST AND DESCRIPTION (CONTINUED)

(When ordering parts, state Model, Part Number, and Description.)

SEMICONDUCTORS (Select replacement transistor for best results) (cont)

ITEM No.	TYPE No.	MFGR. PART No.	REPLACEMENT DATA									
			GENERAL ELECTRIC PART No.	MALLORY PART No.	MOTOROLA PART No.	RAYTHEON PART No.	RCA PART No.	SPRAGUE PART No.	SYLVANIA PART No.	THORDARSON PART No.	WORKMAN PART No.	ZENITH PART No.
D41	1S2687D				HEPR2502				ECG612		WEP200	ZEN-452
	1S2687				HEPR2502				ECG612		WEP200	ZEN-452
	1S2686				HEPR2502				ECG612		WEP200	ZEN-452
D43	1S2687D	2000-323			HEPR2502				ECG612		WEP200	ZEN-452
	1S2687				HEPR2502				ECG612		WEP200	ZEN-452
	1S2686				HEPR2502				ECG612		WEP200	ZEN-452
D44	CZ092	2000-327	GEZD-9.1	ZB9.1A	HEPZ0412	RE 114	SK3060	RT-240	ECG139	1N4739A	WEP1109	103-272
D45	1S2687D	2000-323			HEPR2502				ECG612		WEP200	ZEN-452
	1S2687				HEPR2502				ECG612		WEP200	ZEN-452
	1S2686				HEPR2502				ECG612		WEP200	ZEN-452
D46	1S2473	2000-317	GE-300	PTC214	HEPR0602	RE 52	SK3100	RT-218	ECG177		WEP1062	
	1S1588		GE-300	PTC214	HEPR0602	RE 52	SK3100	RT-218	ECG177		WEP1062	
	1S2472		GE-300	PTC214	HEPR0602	RE 52	SK3100	RT-218	ECG177		WEP1062	
D47	1S2473	2000-317	GE-300	PTC214	HEPR0602	RE 52	SK3100	RT-218	ECG177		WEP1062	
	1S1588		GE-300	PTC214	HEPR0602	RE 52	SK3100	RT-218	ECG177		WEP1062	
	1S2472		GE-300	PTC214	HEPR0602	RE 52	SK3100	RT-218	ECG177		WEP1062	
D48	1N60P	2000-337	1N60	PTC206	HEPR9135	RE 47	SK3088	RT-263	ECG109	1N60	WEP134	ZEN-430
	1N60		1N60	PTC206	HEPR9135	RE 47	SK3088	RT-263	ECG109	1N60	WEP134	ZEN-430
D49	1N60P	2000-337	1N60	PTC206	HEPR9135	RE 47	SK3088	RT-263	ECG109	1N60	WEP134	ZEN-430
	1N60		1N60	PTC206	HEPR9135	RE 47	SK3088	RT-263	ECG109	1N60	WEP134	ZEN-430
D50	1N60P	2000-318	1N60	PTC206	HEPR9135	RE 47	SK3088	RT-263	ECG109	1N60	WEP134	ZEN-430
	1N60		1N60	PTC206	HEPR9135	RE 47	SK3088	RT-263	ECG109	1N60	WEP134	ZEN-430
D51	MV1Y	2000-339		PTC301		RE 250			ECG601			
D52	MV1Y	2000-339		PTC301		RE 250			ECG601			
D53	1S2473	2000-317	GE-300	PTC214	HEPR0602	RE 52	SK3100	RT-218	ECG177		WEP1062	
	1S1588		GE-300	PTC214	HEPR0602	RE 52	SK3100	RT-218	ECG177		WEP1062	
	1S2472		GE-300	PTC214	HEPR0602	RE 52	SK3100	RT-218	ECG177		WEP1062	
D54	SR1K2	2000-320	GE-504A	PTC201	HEPR0052	RE 49	SK3030	RT-213	ECG116	1N4004	WEP156	212-61
	G2BJ		GE-504A	PTC201	HEPR0052	RE 49	SK3030	RT-213	ECG116	1N4004	WEP156	212-61
	S3V		GE-504A	PTC201	HEPR0052	RE 49	SK3030	RT-213	ECG116	1N4004	WEP156	212-61
D55	1N60P	2000-318	1N60	PTC206	HEPR9135	RE 47	SK3088	RT-263	ECG109	1N60	WEP134	ZEN-430
	1N60		1N60	PTC206	HEPR9135	RE 47	SK3088	RT-263	ECG109	1N60	WEP134	ZEN-430
D56	1S2473	2000-302	GE-300	PTC214	HEPR0602	RE 52	SK3100	RT-218	ECG177		WEP1062	
	1S1588		GE-300	PTC214	HEPR0602	RE 52	SK3100	RT-218	ECG177		WEP1062	
	1S2472		GE-300	PTC214	HEPR0602	RE 52	SK3100	RT-218	ECG177		WEP1062	
D57	1S2473	2000-302	GE-300	PTC214	HEPR0602	RE 52	SK3100	RT-218	ECG177		WEP1062	
	1S1588		GE-300	PTC214	HEPR0602	RE 52	SK3100	RT-218	ECG177		WEP1062	
	1S2472		GE-300	PTC214	HEPR0602	RE 52	SK3100	RT-218	ECG177		WEP1062	
D58	1S2473	2000-302	GE-300	PTC214	HEPR0602	RE 52	SK3100	RT-218	ECG177		WEP1062	
	1S1588		GE-300	PTC214	HEPR0602	RE 52	SK3100	RT-218	ECG177		WEP1062	
	1S2472		GE-300	PTC214	HEPR0602	RE 52	SK3100	RT-218	ECG177		WEP1062	
D59	1N60P	2000-318	1N60	PTC206	HEPR9135	RE 47	SK3088	RT-263	ECG109	1N60	WEP134	ZEN-430
	1N60		1N60	PTC206	HEPR9135	RE 47	SK3088	RT-263	ECG109	1N60	WEP134	ZEN-430
D61	1S2473	2000-319	GE-300	PTC214	HEPR0602	RE 52	SK3100	RT-218	ECG177		WEP1062	
	1S1588		GE-300	PTC214	HEPR0602	RE 52	SK3100	RT-218	ECG177		WEP1062	
	1S2472		GE-300	PTC214	HEPR0602	RE 52	SK3100	RT-218	ECG177		WEP1062	
D62	1S2473	2000-319	GE-300	PTC214	HEPR0602	RE 52	SK3100	RT-218	ECG177		WEP1062	
	1S1588		GE-300	PTC214	HEPR0602	RE 52	SK3100	RT-218	ECG177		WEP1062	
	1S2472		GE-300	PTC214	HEPR0602	RE 52	SK3100	RT-218	ECG177		WEP1062	
D64	1S2473	2000-319	GE-300	PTC214	HEPR0602	RE 52	SK3100	RT-218	ECG177		WEP1062	
	1S1588		GE-300	PTC214	HEPR0602	RE 52	SK3100	RT-218	ECG177		WEP1062	
	1S2472		GE-300	PTC214	HEPR0602	RE 52	SK3100	RT-218	ECG177		WEP1062	
D65	1S2473	2000-319	GE-300	PTC214	HEPR0602	RE 52	SK3100	RT-218	ECG177		WEP1062	
	1S1588		GE-300	PTC214	HEPR0602	RE 52	SK3100	RT-218	ECG177		WEP1062	
	1S2472		GE-300	PTC214	HEPR0602	RE 52	SK3100	RT-218	ECG177		WEP1062	
D74	SR1K2	2000-320	GE-504A	PTC201	HEPR0052	RE 49	SK3030	RT-213	ECG116	1N4004	WEP156	212-61
D75	1S2473	2000-319	GE-300	PTC214	HEPR0602	RE 52	SK3100	RT-218	ECG177		WEP1062	
	1S1588		GE-300	PTC214	HEPR0602	RE 52	SK3100	RT-218	ECG177		WEP1062	
	1S2472		GE-300	PTC214	HEPR0602	RE 52	SK3100	RT-218	ECG177		WEP1062	
D76	1S2473	2000-319	GE-300	PTC214	HEPR0602	RE 52	SK3100	RT-218	ECG177		WEP1062	
	1S1588		GE-300	PTC214	HEPR0602	RE 52	SK3100	RT-218	ECG177		WEP1062	
	1S2472		GE-300	PTC214	HEPR0602	RE 52	SK3100	RT-218	ECG177		WEP1062	
D84	1S2473	2000-319	GE-300	PTC214	HEPR0602	RE 52	SK3100	RT-218	ECG177		WEP1062	
	1S1588		GE-300	PTC214	HEPR0602	RE 52	SK3100	RT-218	ECG177		WEP1062	
	1S2472		GE-300	PTC214	HEPR0602	RE 52	SK3100	RT-218	ECG177		WEP1062	
D301	WZ061	2000-328	GEZD-6.2	ZM6.2B		RE 109		RT-237	ECG5013	1N4735A	WEP1414	
D302	BZ162	2000-312	GEZD-16	ZB16B		RE 122		RT-246	ECG5075A	1N4745A	WEP1160	
D406	S5VB10	2000-330										
D601	1N60P	2000-337	1N60	PTC206	HEPR9135	RE 47	SK3088	RT-263	ECG109	1N60	WEP134	ZEN-430
	1N60		1N60	PTC206	HEPR9135	RE 47	SK3088	RT-263	ECG109	1N60	WEP134	ZEN-430
D602	1N60P	2000-337	1N60	PTC206	HEPR9135	RE 47	SK3088	RT-263	ECG109	1N60	WEP134	ZEN-430
	1N60		1N60	PTC206	HEPR9135	RE 47	SK3088	RT-263	ECG109	1N60	WEP134	ZEN-430
D603	1S2473	2000-319	GE-300	PTC214	HEPR0602	RE 52	SK3100	RT-218	ECG177		WEP1062	
	1S1588		GE-300	PTC214	HEPR0602	RE 52	SK3100	RT-218	ECG177		WEP1062	
	1S2472		GE-300	PTC214	HEPR0602	RE 52	SK3100	RT-218	ECG177		WEP1062	
FET1	3SK45B	2000-102	GE-FET-4	PTC182	HEPF2004	RE 199	SK3050	RT-181	ECG222		WEP905	121-826
	3N201		GE-FET-4	PTC182	HEPF2004	RE 199	SK3050	RT-181	ECG222		WEP905	121-826
	3SK45		GE-FET-4	PTC182	HEPF2004	RE 199	SK3050	RT-181	ECG222		WEP905	121-826
	3SK41		GE-FET-4	PTC182	HEPF2004	RE 199	SK3050	RT-181	ECG222		WEP905	121-826
FET2	2SK19BL		GE-FET-2	PTC161	HEPF0021	RE 45	SK3116	RT-175	ECG312		WEP920	ZEN-123
	2NJ233B		GE-FET-2	PTC161	HEPF0021	RE 45	SK3116	RT-175	ECG312		WEP920	ZEN-123
	JF1033	2000-105	GE-FET-2	PTC161	HEPF0021	RE 45	SK3116	RT-175	ECG312		WEP920	ZEN-123
	2SK19		GE-FET-2	PTC161	HEPF0021	RE 45	SK3116	RT-175	ECG312		WEP920	ZEN-123
	2SK33		GE-FET-2	PTC161	HEPF0021	RE 45	SK3116	RT-175	ECG312		WEP920	ZEN-123
FET3	2SK68A		GE-FET-1	PTC151	HEPF0010	RE 46	SK3112	RT-176	ECG133		WEP801	ZEN-123
	2SK68		GE-FET-1	PTC151	HEPF0010	RE 46	SK3112	RT-176	ECG133		WEP801	ZEN-123
	2SK30A		GE-FET-1	PTC151	HEPF0010	RE 46	SK3112	RT-176	ECG133		WEP801	ZEN-123
	2SK68AM	2000-104	GE-FET-1	PTC151	HEPF0010	RE 46	SK3112	RT-176	ECG133		WEP801	ZEN-123
FET4	3SK45B		GE-FET-4	PTC182	HEPF2004	RE 199	SK3050	RT-181	ECG222		WEP905	121-826
	3SK45		GE-FET-4	PTC182	HEPF2004	RE 199	SK3050	RT-181	ECG222		WEP905	121-826
	3N201		GE-FET-4	PTC182	HEPF2004	RE 199	SK3050	RT-181	ECG222		WEP905	121-826
	3SK40		GE-FET-4	PTC182	HEPF2004	RE 199	SK3050	RT-181	ECG222		WEP905	121-826
	3SK41		GE-FET-4	PTC182	HEPF2004	RE 199	SK3050	RT-181	ECG222		WEP905	121-826
	3SK45-B-09	2000-103	GE-FET-4	PTC182	HEPF2004	RE 199	SK3050	RT-181	ECG222		WEP905	121-826
FET5	2SK68A		GE-FET-1	PTC151	HEPF0010	RE 46	SK3112	RT-176	ECG133		WEP801	ZEN-123
	2SK68		GE-FET-1	PTC151	HEPF0010	RE 46	SK3112	RT-176	ECG133		WEP801	ZEN-123
	2SK30A		GE-FET-1	PTC151	HEPF0010	RE 46	SK3112	RT-176	ECG133		WEP801	ZEN-123
	2SK68AM	2000-104	GE-FET-1	PTC151	HEPF0010	RE 46	SK3112	RT-176	ECG133		WEP801	ZEN-123

PARTS LIST AND DESCRIPTION (CONTINUED)

(When ordering parts, state Model, Part Number, and Description.)

SEMICONDUCTORS (Select replacement transistor for best results) (cont)

ITEM No.	TYPE No.	MFGR. PART No.	REPLACEMENT DATA									
			GENERAL ELECTRIC PART No.	MALLORY PART No.	MOTOROLA PART No.	RAYTHEON PART No.	RCA PART No.	SPRAGUE PART No.	SYLVANIA PART No.	THORDARSON PART No.	WORKMAN PART No.	ZENITH PART No.
FET6	2SK19BL		GE-FET-2	PTC161	HEPF0021	RE 45	SK3116	RT-175	ECG312		WEP920	ZEN-123
	JF1033	2000-105	GE-FET-2	PTC161	HEPF0021	RE 45	SK3116	RT-175	ECG312		WEP920	ZEN-123
	2SK19		GE-FET-2	PTC161	HEPF0021	RE 45	SK3116	RT-175	ECG312		WEP920	ZEN-123
	2NJ33B		GE-FET-2	PTC161	HEPF0021	RE 45	SK3116	RT-175	ECG312		WEP920	ZEN-123
FET7	3SK45B	2000-102	GE-FET-4	PTC182	HEPF2004	RE 199	SK3050	RT-181	ECG222		WEP905	121-826
	3N201		GE-FET-4	PTC182	HEPF2004	RE 199	SK3050	RT-181	ECG222		WEP905	121-826
	3SK45		GE-FET-4	PTC182	HEPF2004	RE 199	SK3050	RT-181	ECG222		WEP905	121-826
	3SK40		GE-FET-4	PTC182	HEPF2004	RE 199	SK3050	RT-181	ECG222		WEP905	121-826
	3SK41		GE-FET-4	PTC182	HEPF2004	RE 199	SK3050	RT-181	ECG222		WEP905	121-826
FET601	JF1033G		GE-FET-2	PTC161	HEPF0021	RE 45	SK3116	RT-175	ECG312		WEP801	ZEN-123
	JF1033	2000-106	GE-FET-2	PTC161	HEPF0021	RE 45	SK3116	RT-175	ECG312		WEP801	ZEN-123
	2SK19		GE-FET-2	PTC161	HEPF0021	RE 45	SK3116	RT-175	ECG312		WEP801	ZEN-123
	2NJ233B		GE-FET-2	PTC161	HEPF0021	RE 45	SK3116	RT-175	ECG312		WEP801	ZEN-123
IC1	UPC577H	2000-007	GEIC-140			RE 341-M			ECG1082	UPC577H	WEP939	
	NJM2201		GEIC-140			RE 341-M			ECG1082	UPC577H	WEP939	
	MB3202		GEIC-140			RE 341-M			ECG1082	UPC577H	WEP939	
IC2	MC1496N	2000-009			HEPC6050G							
	MC1496A				HEPC6050G							
	LM1496N				HEPC6050G							
IC3	UPC592H2	2000-006							ECG1195			
	TA7120P		GEIC-103			RE 340-M	SK3285		ECG1087			
IC4	UPC1156H	2000-005							ECG1194			
	NJM2016								ECG1194			
	MB3710								ECG1194			
IC5	UHIC005A	2000-011							ECG1204			
	UHIC005								ECG1204			
IC6	78L05A					RE 387-IC			ECG977			
	NJM78L05A	2000-004				RE 387-IC			ECG977			
	78L05					RE 387-IC			ECG977			
	78L05AV					RE 387-IC			ECG977			
IC7	UPD858								ECG1198			
	UPD858C	2000-001							ECG1198			
	KM858C								ECG1198			
TR1	2SC945A		GE-212	PTC121*	2SC945	RE 192	SK3124	RT-107A	ECG199	2SC945	WEP1945	121-Z9000
	2SC945		GE-212	PTC121*	2SC945	RE 192	SK3124	RT-107A	ECG199	2SC945	WEP1945	121-Z9000
	2SC828		GE-61*	PTC121*	2SC828	RE 192	SK3122	RT-302	ECG199	2SC828	WEP828	ZEN-119
	2SC1740		GE-62	PTC121*	HEPS0015*	RE 13*	SK3122	RT-109*	ECG123A*		WEP736*	121-972
	2SC945AP	2000-235	GE-212	PTC121*	2SC945	RE 192	SK3124	RT-107A	ECG199	2SC945	WEP1945	121-Z9000
TR2	2SA733P	2000-236	GE-48	PTC103*	2SA733	RE 219	SK3138	RT-303	ECG294	2SA733	WEP916	
	2SA733		GE-48	PTC103*	2SA733	RE 219	SK3138	RT-303	ECG294	2SA733	WEP916	
	2SA495		GE-221*	PTC103*	2SA495	RE 26*	SK3114	RT-303	ECG159*	2SA495	WEP495	ZEN-106
	2SA564		GE-65	PTC103*	2SA564	RE 193	SK3114	RT-303	ECG234	2SA564	WEP564	121-879
TR3	2SC1730L	2000-214	GE-17*	PTC136*	HEPS0025*	RE 9	SK3018*	RT-107A	ECG107		WEP535	121-881
	2SC1730		GE-17*	PTC136*	HEPS0025*	RE 9	SK3018*	RT-107A	ECG107		WEP535	121-881
	2SC945		GE-212	PTC121*	2SC945	RE 192	SK3124	RT-107A	ECG199	2SC945	WEP1945	121-Z9000
	2SC828		GE-61*	PTC121*	2SC828	RE 192	SK3122	RT-302	ECG199	2SC828	WEP828	ZEN-119
	2SC1740		GE-62	PTC121*	HEPS0015*	RE 13*	SK3122	RT-109*	ECG123A*		WEP736*	121-972
TR4	2SC945AP	2000-235	GE-212	PTC121*	2SC945	RE 192	SK3124	RT-107A	ECG199	2SC945	WEP1945	121-Z9000
	2SC945A		GE-212	PTC121*	2SC945	RE 192	SK3124	RT-107A	ECG199	2SC945	WEP1945	121-Z9000
	2SC945		GE-212	PTC121*	2SC945	RE 192	SK3124	RT-107A	ECG199	2SC945	WEP1945	121-Z9000
	2SC828		GE-61*	PTC121*	2SC828	RE 192	SK3122	RT-302	ECG199	2SC828	WEP828	ZEN-119
	2SC1740		GE-62	PTC121*	HEPS0015*	RE 13*	SK3122	RT-109*	ECG123A*		WEP736*	121-972
TR5	2SC1730L	2000-214	GE-17*	PTC136*	HEPS0025*	RE 9	SK3018*	RT-107A	ECG107		WEP535	121-881
	2SC1730		GE-17*	PTC136*	HEPS0025*	RE 9	SK3018*	RT-107A	ECG107		WEP535	121-881
	2SC460		GE-61*	PTC136*	2SC460	RE 9	SK3018*	RT-134	ECG107	2SC460	WEP460	121-722
	2SC930		GE-60*	PTC132*	2SC930	RE 9	SK3039*	RT-308	ECG229*	2SC930	WEP956*	ZEN-127
	2SC1675		GE-213	PTC139*	2SC1675	RE 13*	SK3124	RT-308	ECG229*		WEP956*	ZEN-127
TR6	2SC1675L	2000-213	GE-213	PTC139*	2SC1675	RE 13*	SK3124	RT-308	ECG229*		WEP956*	ZEN-127
	2SC1675		GE-213	PTC139*	2SC1675	RE 13*	SK3124	RT-308	ECG229*		WEP956*	ZEN-127
	2SC460		GE-61*	PTC136*	2SC460	RE 9	SK3018*	RT-134	ECG107	2SC460	WEP460	121-722
	2SC829		GE-61*	PTC132*	2SC839	RE 13*	SK3018*	RT-308	ECG123A*	2SC839	WEP736*	ZEN-120
	2SC829		GE-20*	PTC121*	2SC829	RE 9*	SK3122	RT-308	ECG229*	2SC829	WEP829	ZEN-127
TR7	2SC1675L	2000-213	GE-213	PTC139*	2SC1675	RE 13*	SK3124	RT-308	ECG229*		WEP956*	ZEN-127
	2SC1675		GE-213	PTC139*	2SC1675	RE 13*	SK3124	RT-308	ECG229*		WEP956*	ZEN-127
	2SC460		GE-61*	PTC136*	2SC460	RE 9	SK3018*	RT-134	ECG107	2SC460	WEP460	121-722
	2SC839		GE-61*	PTC132*	2SC839	RE 13*	SK3018*	RT-308	ECG123A*	2SC839	WEP736*	ZEN-120
	2SC829		GE-20*	PTC121*	2SC829	RE 9*	SK3122	RT-308	ECG229*	2SC829	WEP829	ZEN-127
TR8	2SC839H	2000-234	GE-61*	PTC132*	2SC839	RE 13*	SK3018*	RT-308	ECG123A*	2SC839	WEP736*	ZEN-120
	2SC839		GE-61*	PTC132*	2SC839	RE 13*	SK3018*	RT-308	ECG123A*	2SC839	WEP736*	ZEN-120
	2SC1675		GE-213	PTC139*	2SC1675	RE 13*	SK3124	RT-308	ECG229*		WEP956*	ZEN-127
	2SC829		GE-20*	PTC121*	2SC829	RE 9*	SK3122	RT-308	ECG229*	2SC829	WEP829	ZEN-127
	2SC460		GE-61*	PTC136*	2SC460	RE 9	SK3018*	RT-134	ECG107	2SC460	WEP460	121-722
TR9	2SC839H	2000-234	GE-61*	PTC132*	2SC839	RE 13*	SK3018*	RT-308	ECG123A*	2SC839	WEP736*	ZEN-120
	2SC839		GE-61*	PTC132*	2SC839	RE 13*	SK3018*	RT-308	ECG123A*	2SC839	WEP736*	ZEN-120
	2SC1675		GE-213	PTC139*	2SC1675	RE 13*	SK3124	RT-308	ECG229*		WEP956*	ZEN-127
	2SC829		GE-20*	PTC121*	2SC829	RE 9*	SK3122	RT-308	ECG229*	2SC829	WEP829	ZEN-127
	2SC460		GE-61*	PTC136*	2SC460	RE 9	SK3018*	RT-134	ECG107	2SC460	WEP460	121-722
TR10	2SC839H	2000-234	GE-61*	PTC132*	2SC839	RE 13*	SK3018*	RT-308	ECG123A*	2SC839	WEP736*	ZEN-120
	2SC839		GE-61*	PTC132*	2SC839	RE 13*	SK3018*	RT-308	ECG123A*	2SC839	WEP736*	ZEN-120
	2SC1675		GE-213	PTC139*	2SC1675	RE 13*	SK3124	RT-308	ECG229*		WEP956*	ZEN-127
	2SC829		GE-20*	PTC121*	2SC829	RE 9*	SK3122	RT-308	ECG229*	2SC829	WEP829	ZEN-127
	2SC460		GE-61*	PTC136*	2SC460	RE 9	SK3018*	RT-134	ECG107	2SC460	WEP460	121-722
TR11	2SC945AP	2000-235	GE-212	PTC121*	2SC945	RE 192	SK3124	RT-107A	ECG199	2SC945	WEP1945	121-Z9000
	2SC945A		GE-212	PTC121*	2SC945	RE 192	SK3124	RT-107A	ECG199	2SC945	WEP1945	121-Z9000
	2SC945		GE-212	PTC121*	2SC945	RE 192	SK3124	RT-107A	ECG199	2SC945	WEP1945	121-Z9000
	2SC828		GE-61*	PTC121*	2SC828	RE 192	SK3122	RT-302	ECG199	2SC828	WEP828	ZEN-119
	2SC1740		GE-62	PTC121*	HEPS0015*	RE 13*	SK3122	RT-109*	ECG123A*		WEP736*	121-972
TR12	2SC945AP	2000-235	GE-212	PTC121*	2SC945	RE 192	SK3124	RT-107A	ECG199	2SC945	WEP1945	121-Z9000
	2SC945A		GE-212	PTC121*	2SC945	RE 192	SK3124	RT-107A	ECG199	2SC945	WEP1945	121-Z9000
	2SC945		GE-212	PTC121*	2SC945	RE 192	SK3124	RT-107A	ECG199	2SC945	WEP1945	121-Z9000
	2SC828		GE-61*	PTC121*	2SC828	RE 192	SK3122	RT-302	ECG199	2SC828	WEP828	ZEN-119
	2SC1740		GE-62	PTC121*	HEPS0015*	RE 13*	SK3122	RT-109*	ECG123A*		WEP736*	121-972

PARTS LIST AND DESCRIPTION (CONTINUED)

(When ordering parts, state Model, Part Number, and Description.)

SEMICONDUCTORS (Select replacement transistor for best results) (cont)

ITEM No.	TYPE No.	MFGR. PART No.	REPLACEMENT DATA									
			GENERAL ELECTRIC PART No.	MALLORY PART No.	MOTOROLA PART No.	RAYTHEON PART No.	RCA PART No.	SPRAGUE PART No.	SYLVANIA PART No.	THORDARSON PART No.	WORKMAN PART No.	ZENITH PART No.
TR13	2SC945AP	2000-235	GE-212	PTC121*	2SC945	RE 192	SK3124	RT-107A	ECG199	2SC945	WEP1945	121-Z9000
	2SC945A		GE-212	PTC121*	2SC945	RE 192	SK3124	RT-107A	ECG199	2SC945	WEP1945	121-Z9000
	2SC945		GE-212	PTC121*	2SC945	RE 192	SK3124	RT-107A	ECG199	2SC945	WEP1945	121-Z9000
	2SC828		GE-61*	PTC121*	2SC828	RE 192	SK3122	RT-302	ECG199	2SC828	WEP828	ZEN-119
	2SC1740		GE-62	PTC121*	HEPS0015*	RE 13*	SK3122	RT-109*	ECG123A*		WEP736*	121-972
TR14	2SC945AP	2000-235	GE-212	PTC121*	2SC945	RE 192	SK3124	RT-107A	ECG199	2SC945	WEP1945	121-Z9000
	2SC945A		GE-212	PTC121*	2SC945	RE 192	SK3124	RT-107A	ECG199	2SC945	WEP1945	121-Z9000
	2SC945		GE-212	PTC121*	2SC945	RE 192	SK3124	RT-107A	ECG199	2SC945	WEP1945	121-Z9000
	2SC828		GE-61*	PTC121*	2SC828	RE 192	SK3122	RT-302	ECG199	2SC828	WEP828	ZEN-119
	2SC1740		GE-62	PTC121*	HEPS0015*	RE 13*	SK3122	RT-109*	ECG123A*		WEP736*	121-972
	2SC458		GE-210*	PTC121*	2SC458	RE 13*	SK3124	RT-187	ECG123A*	2SC458	WEP458	ZEN-114
	2SC900		GE-62	PTC139*	2SC900	RE 192	SK3124	RT-302	ECG199	2SC900	WEP66	ZEN-119
	2SC372		GE-61*	PTC121*	2SC372	RE 13*	SK3122	RT-308	ECG123A*	2SC372	WEP372	ZEN-114
TR15	2SC945AP	2000-235	GE-212	PTC121*	2SC945	RE 192	SK3124	RT-107A	ECG199	2SC945	WEP1945	121-Z9000
	2SC945A		GE-212	PTC121*	2SC945	RE 192	SK3124	RT-107A	ECG199	2SC945	WEP1945	121-Z9000
	2SC945		GE-212	PTC121*	2SC945	RE 192	SK3124	RT-107A	ECG199	2SC945	WEP1945	121-Z9000
	2SC828		GE-61*	PTC121*	2SC828	RE 192	SK3122	RT-302	ECG199	2SC828	WEP828	ZEN-119
	2SC1740		GE-62	PTC121*	HEPS0015*	RE 13*	SK3122	RT-109*	ECG123A*		WEP736*	121-972
	2SC458		GE-210*	PTC121*	2SC458	RE 13*	SK3124	RT-187	ECG123A*	2SC458	WEP458	ZEN-114
	2SC900		GE-62	PTC139*	2SC900	RE 192	SK3124	RT-302	ECG199	2SC900	WEP66	ZEN-119
	2SC372		GE-61*	PTC121*	2SC372	RE 13*	SK3122	RT-308	ECG123A*	2SC372	WEP372	ZEN-114
TR16	2SC945AP	2000-235	GE-212	PTC121*	2SC945	RE 192	SK3124	RT-107A	ECG199	2SC945	WEP1945	121-Z9000
	2SC945A		GE-212	PTC121*	2SC945	RE 192	SK3124	RT-107A	ECG199	2SC945	WEP1945	121-Z9000
	2SC945		GE-212	PTC121*	2SC945	RE 192	SK3124	RT-107A	ECG199	2SC945	WEP1945	121-Z9000
	2SC828		GE-61*	PTC121*	2SC828	RE 192	SK3122	RT-302	ECG199	2SC828	WEP828	ZEN-119
	2SC1740		GE-62	PTC121*	HEPS0015*	RE 13*	SK3122	RT-109*	ECG123A*		WEP736*	121-972
	2SC458		GE-210*	PTC121*	2SC458	RE 13*	SK3124	RT-187	ECG123A*	2SC458	WEP458	ZEN-114
	2SC900		GE-62	PTC139*	2SC900	RE 192	SK3124	RT-302	ECG199	2SC900	WEP66	ZEN-119
	2SC372		GE-61*	PTC121*	2SC372	RE 13*	SK3122	RT-308	ECG123A*	2SC372	WEP372	ZEN-114
TR17	2SA733P	2000-236	GE-48	PTC103*	2SA733	RE 219	SK3138	RT-303	ECG294	2SA733	WEP916	
	2SA733		GE-48	PTC103*	2SA733	RE 219	SK3138	RT-303	ECG294	2SA733	WEP916	
	2SA495		GE-221*	PTC103*	2SA495	RE 26*	SK3114	RT-303	ECG159*	2SA495	WEP495	ZEN-106
	2SA564		GE-65	PTC103*	2SA564	RE 193	SK3114	RT-303	ECG234	2SA564	WEP564	121-879
TR18	2SC945AP	2000-235	GE-212	PTC121*	2SC945	RE 192	SK3124	RT-107A	ECG199	2SC945	WEP1945	121-Z9000
	2SC945A		GE-212	PTC121*	2SC945	RE 192	SK3124	RT-107A	ECG199	2SC945	WEP1945	121-Z9000
	2SC945		GE-212	PTC121*	2SC945	RE 192	SK3124	RT-107A	ECG199	2SC945	WEP1945	121-Z9000
	2SC828		GE-61*	PTC121*	2SC828	RE 192	SK3122	RT-302	ECG199	2SC828	WEP828	ZEN-119
	2SC1740		GE-62	PTC121*	HEPS0015*	RE 13*	SK3122	RT-109*	ECG123A*		WEP736*	121-972
	2SC458		GE-210*	PTC121*	2SC458	RE 13*	SK3124	RT-187	ECG123A*	2SC458	WEP458	ZEN-114
	2SC900		GE-62	PTC139*	2SC900	RE 192	SK3124	RT-302	ECG199	2SC900	WEP66	ZEN-119
	2SC372		GE-61*	PTC121*	2SC372	RE 13*	SK3122	RT-308	ECG123A*	2SC372	WEP372	ZEN-114
TR19	2SA733P	2000-236	GE-48	PTC103*	2SA733	RE 219	SK3138	RT-303	ECG294	2SA733	WEP916	
	2SA733		GE-48	PTC103*	2SA733	RE 219	SK3138	RT-303	ECG294	2SA733	WEP916	
	2SA495		GE-221*	PTC103*	2SA495	RE 26*	SK3114	RT-303	ECG159*	2SA495	WEP495	ZEN-106
	2SA564		GE-65	PTC103*	2SA564	RE 193	SK3114	RT-303	ECG234	2SA564	WEP564	121-879
TR20	2SC945AP	2000-235	GE-212	PTC121*	2SC945	RE 192	SK3124	RT-107A	ECG199	2SC945	WEP1945	121-Z9000
	2SC945A		GE-212	PTC121*	2SC945	RE 192	SK3124	RT-107A	ECG199	2SC945	WEP1945	121-Z9000
	2SC945		GE-212	PTC121*	2SC945	RE 192	SK3124	RT-107A	ECG199	2SC945	WEP1945	121-Z9000
	2SC828		GE-61*	PTC121*	2SC828	RE 192	SK3122	RT-302	ECG199	2SC828	WEP828	ZEN-119
	2SC1740		GE-62	PTC121*	HEPS0015*	RE 13*	SK3122	RT-109*	ECG123A*		WEP736*	121-972
	2SC458		GE-210*	PTC121*	2SC458	RE 13*	SK3124	RT-187	ECG123A*	2SC458	WEP458	ZEN-114
	2SC900		GE-62	PTC139*	2SC900	RE 192	SK3124	RT-302	ECG199	2SC900	WEP66	ZEN-119
	2SC372		GE-61*	PTC121*	2SC372	RE 13*	SK3122	RT-308	ECG123A*	2SC372	WEP372	ZEN-114
TR21	2SC945AP	2000-235	GE-212	PTC121*	2SC945	RE 192	SK3124	RT-107A	ECG199	2SC945	WEP1945	121-Z9000
	2SC945A		GE-212	PTC121*	2SC945	RE 192	SK3124	RT-107A	ECG199	2SC945	WEP1945	121-Z9000
	2SC945		GE-212	PTC121*	2SC945	RE 192	SK3124	RT-107A	ECG199	2SC945	WEP1945	121-Z9000
	2SC828		GE-61*	PTC121*	2SC828	RE 192	SK3122	RT-302	ECG199	2SC828	WEP828	ZEN-119
	2SC1740		GE-62	PTC121*	HEPS0015*	RE 13*	SK3122	RT-109*	ECG123A*		WEP736*	121-972
	2SC458		GE-210*	PTC121*	2SC458	RE 13*	SK3124	RT-187	ECG123A*	2SC458	WEP458	ZEN-114
	2SC900		GE-62	PTC139*	2SC900	RE 192	SK3124	RT-302	ECG199	2SC900	WEP66	ZEN-119
	2SC372		GE-61*	PTC121*	2SC372	RE 13*	SK3122	RT-308	ECG123A*	2SC372	WEP372	ZEN-114
TR22	2SC945AP	2000-235	GE-212	PTC121*	2SC945	RE 192	SK3124	RT-107A	ECG199	2SC945	WEP1945	121-Z9000
	2SC945A		GE-212	PTC121*	2SC945	RE 192	SK3124	RT-107A	ECG199	2SC945	WEP1945	121-Z9000
	2SC945		GE-212	PTC121*	2SC945	RE 192	SK3124	RT-107A	ECG199	2SC945	WEP1945	121-Z9000
	2SC828		GE-61*	PTC121*	2SC828	RE 192	SK3122	RT-302	ECG199	2SC828	WEP828	ZEN-119
	2SC1740		GE-62	PTC121*	HEPS0015*	RE 13*	SK3122	RT-109*	ECG123A*		WEP736*	121-972
	2SC458		GE-210*	PTC121*	2SC458	RE 13*	SK3124	RT-187	ECG123A*	2SC458	WEP458	ZEN-114
	2SC900		GE-62	PTC139*	2SC900	RE 192	SK3124	RT-302	ECG199	2SC900	WEP66	ZEN-119
	2SC372		GE-61*	PTC121*	2SC372	RE 13*	SK3122	RT-308	ECG123A*	2SC372	WEP372	ZEN-114
TR23	2SC945AP	2000-235	GE-212	PTC121*	2SC945	RE 192	SK3124	RT-107A	ECG199	2SC945	WEP1945	121-Z9000
	2SC945A		GE-212	PTC121*	2SC945	RE 192	SK3124	RT-107A	ECG199	2SC945	WEP1945	121-Z9000
	2SC945		GE-212	PTC121*	2SC945	RE 192	SK3124	RT-107A	ECG199	2SC945	WEP1945	121-Z9000
	2SC828		GE-61*	PTC121*	2SC828	RE 192	SK3122	RT-302	ECG199	2SC828	WEP828	ZEN-119
	2SC1740		GE-62	PTC121*	HEPS0015*	RE 13*	SK3122	RT-109*	ECG123A*		WEP736*	121-972
	2SC458		GE-210*	PTC121*	2SC458	RE 13*	SK3124	RT-187	ECG123A*	2SC458	WEP458	ZEN-114
	2SC900		GE-62	PTC139*	2SC900	RE 192	SK3124	RT-302	ECG199	2SC900	WEP66	ZEN-119
	2SC372		GE-61*	PTC121*	2SC372	RE 13*	SK3122	RT-308	ECG123A*	2SC372	WEP372	ZEN-114
TR25	2SC1419B	2000-216	GE-66	PTC167	HEPS5027	RE 21	SK3054	RT-197	ECG152		WEP745	
	2SD325		GE-28	PTC110	2SD325	RE 42	SK3197	RT-197	ECG186	2SD325	WEP751	
	2SC1096		GE-28	PTC110	2SC1096	RE 42	SK3197	RT-166	ECG186A	2SC1096	WEP1096	
	2SD235		GE-66		2SD235	RE 21	SK3054	RT-197	ECG152	2SD235	WEP745	
	2SC1419		GE-66	PTC167	HEPS5027	RE 21	SK3054	RT-197	ECG152		WEP745	
TR26	2SC945AP	2000-235	GE-212	PTC121*	2SC945	RE 192	SK3124	RT-107A	ECG199	2SC945	WEP1945	121-Z9000
	2SC945A		GE-212	PTC121*	2SC945	RE 192	SK3124	RT-107A	ECG199	2SC945	WEP1945	121-Z9000
	2SC945		GE-212	PTC121*	2SC945	RE 192	SK3124	RT-107A	ECG199	2SC945	WEP1945	121-Z9000
	2SC828		GE-61*	PTC121*	2SC828	RE 192	SK3122	RT-302	ECG199	2SC828	WEP828	ZEN-119
	2SC1740		GE-62	PTC121*	HEPS0015*	RE 13*	SK3122	RT-109*	ECG123A*		WEP736*	121-972
	2SC458		GE-210*	PTC121*	2SC458	RE 13*	SK3124	RT-187	ECG123A*	2SC458	WEP458	ZEN-114
	2SC900		GE-62	PTC139*	2SC900	RE 192	SK3124	RT-302	ECG199	2SC900	WEP66	ZEN-119
	2SC372		GE-61*	PTC121*	2SC372	RE 13*	SK3122	RT-308	ECG123A*	2SC372	WEP372	ZEN-114
TR27	2SC1675L	2000-213	GE-213	PTC139*	2SC1675	RE 13*	SK3124	RT-308	ECG229*		WEP956*	ZEN-127
	2SC1675		GE-213	PTC139*	2SC1675	RE 13*	SK3124	RT-308	ECG229*		WEP956*	ZEN-127
	2SC460		GE-61*	PTC136*	2SC460	RE 9	SK3018*	RT-134	ECG107	2SC460	WEP460	121-722
	2SC839		GE-61*	PTC132*	2SC839	RE 13*	SK3018*	RT-308	ECG123A*	2SC839	WEP736*	ZEN-120
	2SC829		GE-20*	PTC121*	2SC829	RE 9*	SK3122	RT-308	ECG229*	2SC829	WEP829	ZEN-127
TR28	2SC1675L	2000-213	GE-213	PTC139*	2SC1675	RE 13*	SK3124	RT-308	ECG229*		WEP956*	ZEN-127
	2SC1675		GE-213	PTC139*	2SC1675	RE 13*	SK3124	RT-308	ECG229*		WEP956*	ZEN-127
	2SC460		GE-61*	PTC136*	2SC460	RE 9	SK3018*	RT-134	ECG107	2SC460	WEP460	121-722
	2SC839		GE-61*	PTC132*	2SC839	RE 13*	SK3018*	RT-308	ECG123A*	2SC839	WEP736*	ZEN-120
	2SC829		GE-20*	PTC121*	2SC829	RE 9*	SK3122	RT-308	ECG229*	2SC829	WEP829	ZEN-127

PARTS LIST AND DESCRIPTION (CONTINUED)

(When ordering parts, state Model, Part Number, and Description.)

SEMICONDUCTORS (Select replacement transistor for best results) (cont)

ITEM No.	TYPE No.	MFGR. PART No.	REPLACEMENT DATA									
			GENERAL ELECTRIC PART No.	MALLORY PART No.	MOTOROLA PART No.	RAYTHEON PART No.	RCA PART No.	SPRAGUE PART No.	SYLVANIA PART No.	THORDARSON PART No.	WORKMAN PART No.	ZENITH PART No.
TR29A	2SC945AP	2000-235	GE-212	PTC121*	2SC945	RE 192	SK3124	RT-107A	ECG199	2SC945	WEP1945	121-Z9000
	2SC945A		GE-212	PTC121*	2SC945	RE 192	SK3124	RT-107A	ECG199	2SC945	WEP1945	121-Z9000
	2SC945		GE-212	PTC121*	2SC945	RE 192	SK3124	RT-107A	ECG199	2SC945	WEP1945	121-Z9000
	2SC828		GE-61*	PTC121*	2SC828	RE 192	SK3122	RT-302	ECG199	2SC828	WEP828	ZEN-119
	2SC1740		GE-62	PTC121*	HEPS0015*	RE 13*	SK3122	RT-109*	ECG123A*		WEP736*	121-972
	2SC458		GE-210*	PTC121*	2SC458	RE 13*	SK3124	RT-187	ECG123A*	2SC458	WEP458	ZEN-114
	2SC900		GE-62	PTC139*	2SC900	RE 192	SK3124	RT-302	ECG199	2SC900	WEP66	ZEN-119
	2SC372		GE-61*	PTC121*	2SC372	RE 13*	SK3122	RT-308	ECG123A*	2SC372	WEP372	ZEN-114
TR29B	2SC945AP	2000-235	GE-212	PTC121*	2SC945	RE 192	SK3124	RT-107A	ECG199	2SC945	WEP1945	121-Z9000
	2SC945A		GE-212	PTC121*	2SC945	RE 192	SK3124	RT-107A	ECG199	2SC945	WEP1945	121-Z9000
	2SC945		GE-212	PTC121*	2SC945	RE 192	SK3124	RT-107A	ECG199	2SC945	WEP1945	121-Z9000
	2SC828		GE-61*	PTC121*	2SC828	RE 192	SK3122	RT-302	ECG199	2SC828	WEP828	ZEN-119
	2SC1740		GE-62	PTC121*	HEPS0015*	RE 13*	SK3122	RT-109*	ECG123A*		WEP736*	121-972
	2SC458		GE-210*	PTC121*	2SC458	RE 13*	SK3124	RT-187	ECG123A*	2SC458	WEP458	ZEN-114
	2SC900		GE-62	PTC139*	2SC900	RE 192	SK3124	RT-302	ECG199	2SC900	WEP66	ZEN-119
	2SC372		GE-61*	PTC121*	2SC372	RE 13*	SK3122	RT-308	ECG123A*	2SC372	WEP372	ZEN-114
TR30	2SC839H	2000-234	GE-61*	PTC132*	2SC839	RE 13*	SK3018*	RT-308	ECG123A*	2SC839	WEP736*	ZEN-120
	2SC1675L		GE-213	PTC139*	2SC1675	RE 13*	SK3124	RT-308	ECG229*		WEP956*	ZEN-127
	2SC1675		GE-213	PTC139*	2SC1675	RE 13*	SK3124	RT-308	ECG229*		WEP956*	ZEN-127
	2SC460		GE-61*	PTC136*	2SC460	RE 9	SK3018*	RT-134	ECG107	2SC460	WEP460	121-722
	2SC839		GE-61*	PTC132*	2SC839	RE 13*	SK3018*	RT-308	ECG123A*	2SC839	WEP736*	ZEN-120
	2SC829		GE-20*	PTC121*	2SC829	RE 9*	SK3122	RT-308	ECG229*	2SC829	WEP829	ZEN-127
TR31	2SC839H	2000-234	GE-61*	PTC132*	2SC839	RE 13*	SK3018*	RT-308	ECG123A*	2SC839	WEP736*	ZEN-120
	2SC1675L		GE-213	PTC139*	2SC1675	RE 13*	SK3124	RT-308	ECG229*		WEP956*	ZEN-127
	2SC1675		GE-213	PTC139*	2SC1675	RE 13*	SK3124	RT-308	ECG229*		WEP956*	ZEN-127
	2SC460		GE-61*	PTC136*	2SC460	RE 9	SK3018*	RT-134	ECG107	2SC460	WEP460	121-722
	2SC839		GE-61*	PTC132*	2SC839	RE 13*	SK3018*	RT-308	ECG123A*	2SC839	WEP736*	ZEN-120
	2SC829		GE-20*	PTC121*	2SC829	RE 9*	SK3122	RT-308	ECG229*	2SC829	WEP829	ZEN-127
TR32	2SC945AP	2000-235	GE-212	PTC121*	2SC945	RE 192	SK3124	RT-107A	ECG199	2SC945	WEP1945	121-Z9000
	2SC945A		GE-212	PTC121*	2SC945	RE 192	SK3124	RT-107A	ECG199	2SC945	WEP1945	121-Z9000
	2SC945		GE-212	PTC121*	2SC945	RE 192	SK3124	RT-107A	ECG199	2SC945	WEP1945	121-Z9000
	2SC828		GE-61*	PTC121*	2SC828	RE 192	SK3122	RT-302	ECG199	2SC828	WEP828	ZEN-119
	2SC1740		GE-62	PTC121*	HEPS0015*	RE 13*	SK3122	RT-109*	ECG123A*		WEP736*	121-972
	2SC458		GE-210*	PTC121*	2SC458	RE 13*	SK3124	RT-187	ECG123A*	2SC458	WEP458	ZEN-114
	2SC900		GE-62	PTC139*	2SC900	RE 192	SK3124	RT-302	ECG199	2SC900	WEP66	ZEN-119
	2SC372		GE-61*	PTC121*	2SC372	RE 13*	SK3122	RT-308	ECG123A*	2SC372	WEP372	ZEN-114
TR34	2SC1675L	2000-213	GE-213	PTC139*	2SC1675	RE 13*	SK3124	RT-308	ECG229*		WEP956*	ZEN-127
	2SC1675		GE-213	PTC139*	2SC1675	RE 13*	SK3124	RT-308	ECG229*		WEP956*	ZEN-127
	2SC839		GE-61*	PTC132*	2SC839	RE 13*	SK3018*	RT-308	ECG123A*	2SC839	WEP736*	ZEN-120
	2SC829		GE-20*	PTC121*	2SC829	RE 9*	SK3122	RT-308	ECG229*	2SC829	WEP829	ZEN-127
	2SC460		GE-61*	PTC136*	2SC460	RE 9	SK3018*	RT-134	ECG107	2SC460	WEP460	121-722
TR35	2SC458C		GE-210*	PTC121*	2SC458	RE 13*	SK3124	RT-187	ECG123A*	2SC458	WEP458	ZEN-114
	2SC458		GE-210*	PTC121*	2SC458	RE 13*	SK3124	RT-187	ECG123A*	2SC458	WEP458	ZEN-114
	2SC945AP		GE-212	PTC121*	2SC945	RE 192	SK3124	RT-107A	ECG199	2SC945	WEP1945	121-Z9000
	2SC945A		GE-212	PTC121*	2SC945	RE 192	SK3124	RT-107A	ECG199	2SC945	WEP1945	121-Z9000
	2SC945		GE-212	PTC121*	2SC945	RE 192	SK3124	RT-107A	ECG199	2SC945	WEP1945	121-Z9000
	2SC828		GE-61*	PTC121*	2SC828	RE 192	SK3122	RT-302	ECG199	2SC828	WEP828	ZEN-119
	2SC1740		GE-62	PTC121*	HEPS0015*	RE 13*	SK3122	RT-109*	ECG123A*		WEP736*	121-972
	2SC900		GE-62	PTC139*	2SC900	RE 192	SK3124	RT-302	ECG199	2SC900	WEP66	ZEN-119
	2SC372		GE-61*	PTC121*	2SC372	RE 13*	SK3122	RT-308	ECG123A*	2SC372	WEP372	ZEN-114
TR38	2SC1675L		GE-213	PTC139*	2SC1675	RE 13*	SK3124	RT-308	ECG229*		WEP956*	ZEN-127
	2SC1675		GE-213	PTC139*	2SC1675	RE 13*	SK3124	RT-308	ECG229*		WEP956*	ZEN-127
	2SC839		GE-61*	PTC132*	2SC839	RE 13*	SK3018*	RT-308	ECG123A*	2SC839	WEP736*	ZEN-120
	2SC829		GE-20*	PTC121*	2SC829	RE 9*	SK3122	RT-308	ECG229*	2SC829	WEP829	ZEN-127
	2SC460		GE-61*	PTC136*	2SC460	RE 9	SK3018*	RT-134	ECG107	2SC460	WEP460	121-722
TR39	2SC1675L	2000-213	GE-213	PTC139*	2SC1675	RE 13*	SK3124	RT-308	ECG229*		WEP956*	ZEN-127
	2SC1675		GE-213	PTC139*	2SC1675	RE 13*	SK3124	RT-308	ECG229*		WEP956*	ZEN-127
	2SC839		GE-61*	PTC132*	2SC839	RE 13*	SK3018*	RT-308	ECG123A*	2SC839	WEP736*	ZEN-120
	2SC829		GE-20*	PTC121*	2SC829	RE 9*	SK3122	RT-308	ECG229*	2SC829	WEP829	ZEN-127
	2SC460		GE-61*	PTC136*	2SC460	RE 9	SK3018*	RT-134	ECG107	2SC460	WEP460	121-722
TR40	2SC1675L	2000-213	GE-213	PTC139*	2SC1675	RE 13*	SK3124	RT-308	ECG229*		WEP956*	ZEN-127
	2SC1675		GE-213	PTC139*	2SC1675	RE 13*	SK3124	RT-308	ECG229*		WEP956*	ZEN-127
	2SC839		GE-61*	PTC132*	2SC839	RE 13*	SK3018*	RT-308	ECG123A*	2SC839	WEP736*	ZEN-120
	2SC829		GE-20*	PTC121*	2SC829	RE 9*	SK3122	RT-308	ECG229*	2SC829	WEP829	ZEN-127
	2SC460		GE-61*	PTC136*	2SC460	RE 9	SK3018*	RT-134	ECG107	2SC460	WEP460	121-722
TR41	2SC945AP	2000-235	GE-212	PTC121*	2SC945	RE 192	SK3124	RT-107A	ECG199	2SC945	WEP1945	121-Z9000
	2SC945A		GE-212	PTC121*	2SC945	RE 192	SK3124	RT-107A	ECG199	2SC945	WEP1945	121-Z9000
	2SC945		GE-212	PTC121*	2SC945	RE 192	SK3124	RT-107A	ECG199	2SC945	WEP1945	121-Z9000
	2SC828		GE-61*	PTC121*	2SC828	RE 192	SK3122	RT-302	ECG199	2SC828	WEP828	ZEN-119
	2SC1740		GE-62	PTC121*	HEPS0015*	RE 13*	SK3122	RT-109*	ECG123A*		WEP736*	121-972
	2SC458		GE-210*	PTC121*	2SC458	RE 13*	SK3124	RT-187	ECG123A*	2SC458	WEP458	ZEN-114
	2SC900		GE-62	PTC139*	2SC900	RE 192	SK3124	RT-302	ECG199	2SC900	WEP66	ZEN-119
	2SC372		GE-61*	PTC121*	2SC372	RE 13*	SK3122	RT-308	ECG123A*	2SC372	WEP372	ZEN-114
TR42	2SC945AP	2000-235	GE-212	PTC121*	2SC945	RE 192	SK3124	RT-107A	ECG199	2SC945	WEP1945	121-Z9000
	2SC945A		GE-212	PTC121*	2SC945	RE 192	SK3124	RT-107A	ECG199	2SC945	WEP1945	121-Z9000
	2SC945		GE-212	PTC121*	2SC945	RE 192	SK3124	RT-107A	ECG199	2SC945	WEP1945	121-Z9000
	2SC828		GE-61*	PTC121*	2SC828	RE 192	SK3122	RT-302	ECG199	2SC828	WEP828	ZEN-119
	2SC1740		GE-62	PTC121*	HEPS0015*	RE 13*	SK3122	RT-109*	ECG123A*		WEP736*	121-972
	2SC458		GE-210*	PTC121*	2SC458	RE 13*	SK3124	RT-187	ECG123A*	2SC458	WEP458	ZEN-114
	2SC900		GE-62	PTC139*	2SC900	RE 192	SK3124	RT-302	ECG199	2SC900	WEP66	ZEN-119
	2SC372		GE-61*	PTC121*	2SC372	RE 13*	SK3122	RT-308	ECG123A*	2SC372	WEP372	ZEN-114
TR43	2SC1307(1)(14)	2000-212	GE-216	PTC186		RE 201	SK3197	RT-158	ECG236		WEP840	
	2SC1307		GE-216	PTC186		RE 201	SK3197	RT-158	ECG236		WEP840	
	2SC1817		GE-216	PTC186		RE 201	SK3197	RT-158	ECG236		WEP840	
	2SC2043		GE-216	PTC186		RE 201	SK3197	RT-158	ECG236		WEP840	
	2SC1969		GE-216	PTC186		RE 201	SK3197	RT-158	ECG236		WEP840	
TR44	2SC1306(15)	2000-211	GE-215	PTC186	2SC1306	RE 203	SK3197	RT-146	ECG235	2SC1306	WEP785	
	2SC2020		GE-215	PTC186	2SC1306	RE 203	SK3197	RT-146	ECG235	2SC1306	WEP785	
	2SC2184		GE-215	PTC186	2SC1306	RE 203	SK3197	RT-146	ECG235	2SC1306	WEP785	
	2SC2166		GE-215	PTC186	2SC1306	RE 203	SK3197	RT-146	ECG235	2SC1306	WEP785	
TR45	2SC1973	2000-215	GE-335		2SC1973		SK3250		ECG315		WEP922	
TR301	2SC945AP	2000-235	GE-212	PTC121*	2SC945	RE 192	SK3124	RT-107A	ECG199	2SC945	WEP1945	121-Z9000
	2SC945A		GE-212	PTC121*	2SC945	RE 192	SK3124	RT-107A	ECG199	2SC945	WEP1945	121-Z9000
	2SC945		GE-212	PTC121*	2SC945	RE 192	SK3124	RT-107A	ECG199	2SC945	WEP1945	121-Z9000
	2SC828		GE-61*	PTC121*	2SC828	RE 192	SK3122	RT-302	ECG199	2SC828	WEP828	ZEN-119
	2SC1740		GE-62	PTC121*	HEPS0015*	RE 13*	SK3122	RT-109*	ECG123A*		WEP736*	121-972
	2SC458		GE-210*	PTC121*	2SC458	RE 13*	SK3124	RT-187	ECG123A*	2SC458	WEP458	ZEN-114
	2SC900		GE-62	PTC139*	2SC900	RE 192	SK3124	RT-302	ECG199	2SC900	WEP66	ZEN-119
	2SC372		GE-61*	PTC132*	HEPS0009*	RE 9	SK3039*	RT-107A	ECG107	2SC380	WEP535	ZEN-127

PARTS LIST AND DESCRIPTION (CONTINUED)

(When ordering parts, state Model, Part Number, and Description.)

SEMICONDUCTORS (Select replacement transistor for best results) (cont)

ITEM No.	TYPE No.	MFGR. PART No.	REPLACEMENT DATA									
			GENERAL ELECTRIC PART No.	MALLORY PART No.	MOTOROLA PART No.	RAYTHEON PART No.	RCA PART No.	SPRAGUE PART No.	SYLVANIA PART No.	THORDARSON PART No.	WORKMAN PART No.	ZENITH PART No.
TR302	2SC1419B (16)	2000-216	GE-66	PTC167	HEPS5027	RE 21	SK3054	RT-197	ECG152		WEP745	
	2SC1419		GE-66	PTC167	HEPS5027	RE 21	SK3054	RT-197	ECG152		WEP745	
TR401	2SC1618		GE-14	PTC140	HEPS7004	RE 19	SK3027	RT-131	ECG130		WEP704	
	2SC1777		GE-14	PTC140	HEPS7004	RE 19	SK3027	RT-131	ECG130		WEP704	
	2SD188		GE-75	PTC118	HEPS7004	RE 29	SK3029	RT-131	ECG130		WEP704	
	2SC1618B	2000-221	GE-14	PTC140	HEPS7004	RE 19	SK3027	RT-131	ECG130		WEP704	
TR402	2SC1419		GE-66	PTC167	HEPS5027	RE 21	SK3054	RT-197	ECG152		WEP745	
	2SD325		GE-28	PTC110	2SD325	RE 42	SK3197	RT-197	ECG186	2SD325	WEP751	
	2SC1096		GE-28	PTC110	2SC1096	RE 42	SK3197	RT-166	ECG186A	2SC1096	WEP1096	
	2SD235		GE-66		2SD235	RE 21	SK3054	RT-197	ECG152	2SD235	WEP745	
	2SC1419B	2000-216	GE-66	PTC167	HEPS5027	RE 21	SK3054	RT-197	ECG152		WEP745	
TR403	2SC1419B	2000-216	GE-66	PTC167	HEPS5027	RE 21	SK3054	RT-197	ECG152		WEP745	
	2SC1419		GE-66	PTC167	HEPS5027	RE 21	SK3054	RT-197	ECG152		WEP745	
	2SD325		GE-28	PTC110	2SD325	RE 42	SK3197	RT-197	ECG186	2SD325	WEP751	
	2SC1096		GE-28	PTC110	2SC1096	RE 42	SK3197	RT-166	ECG186A	2SC1096	WEP1096	
	2SD235		GE-66		2SD235	RE 21	SK3054	RT-197	ECG152	2SD235	WEP745	
TR601	2SC1675L	2000-213	GE-213	PTC139*	2SC1675	RE 13*	SK3124	RT-308	ECG229*		WEP956*	ZEN-127
	2SC1675		GE-213	PTC139*	2SC1675	RE 13*	SK3124	RT-308	ECG229*		WEP956*	ZEN-127
	2SC839		GE-61*	PTC132*	2SC839	RE 13*	SK3018*	RT-308	ECG123A*	2SC839	WEP736*	ZEN-120
	2SC829		GE-20*	PTC121*	2SC829	RE 9*	SK3122	RT-308	ECG229*	2SC829	WEP829	ZEN-127
	2SC460		GE-61*	PTC136*	2SC460	RE 9	SK3018*	RT-134	ECG107	2SC460	WEP460	121-722

(14) 25 Watt @ 8.0 Amp.
(15) 12 Watt @ 3.0 Amp.
(16) 20 Watt @ 2.0 Amp.

ELECTROLYTIC CAPACITORS

ITEM No.	RATING	REPLACEMENT DATA				
		MFGR. PART No.	CORNELL-DUBILIER PART No.	MALLORY PART No.	SPRAGUE PART No.	
					Q-LINE	GENERAL LINE
C14	33 10V	1800-323	PC30-25	VTT33B10	QV1-61	EV-1125
C17B	2.2 25V	1800-603		TDC225M035FL		SD35-2R29
C35	1 50V	1800-302	PC1-50	VTT1A50	QV1-11	EV-1615
C39	.1 16V	1800-501		TDC104M050EL	QDT1-2	SD50-R109
C42	10 16V	1800-306	PC10-25	VTT10B25	QV1-41	EV-1222
C43	10 16V	1800-306	PC10-25	VTT10B25	QV1-41	EV-1222
C44	4.7 25V	1800-304	PC5-50	VTT4R7B50	QV1-27	EV-1319
C47	47 10V	1800-316	PC50-16	VTT47D16	QV1-73	EV-1226
C49	47 10V	1800-316	PC50-16	VTT47D16	QV1-73	EV-1226
C50	47 10V	1800-316	PC50-16	VTT47D16	QV1-73	EV-1226
C52	1 25V	1800-606		TDC105M035EL		SD35-19
C55	2.2 25V	1800-303	PC2-100	VTT2R2A50	QV1-19	EV-1517
C58	1 50V	1800-302	PC1-50	VTT1A50	QV1-11	EV-1615
C59	47 10V	1800-316	PC50-16	VTT47D16	QV1-73	EV-1226
C60	.1 16V	1800-501		TDC104M050EL	QDT1-2	SD50-R109
C63	10 16V	1800-306	PC10-25	VTT10B25	QV1-41	EV-1222
C66	47 10V	1800-316	PC50-16	VTT47D16	QV1-73	EV-1226
C67	4.7 25V	1800-304	PC5-50	VTT4R7B50	QV1-27	EV-1319
C68	4.7 25V	1800-304	PC5-50	VTT4R7B50	QV1-27	EV-1319
C69	10 16V	1800-306	PC10-25	VTT10B25	QV1-41	EV-1222
C76	47 10V	1800-316	PC50-16	VTT47D16	QV1-73	EV-1226
C77	.47 50V	1800-301	PC1-50	VTTR47A63	QV1-3	EV-1610
C78	.47 50V	1800-301	PC1-50	VTTR47A63	QV1-3	EV-1610
C79	.47 50V	1800-301	PC1-50	VTTR47A63	QV1-3	EV-1610
C81	220 16V	1800-314	PC250-25	VTT220H16	QV1-117	EV-1240
C84	1 50V	1800-302	PC1-50	VTT1A50	QV1-11	EV-1615
C87	10 16V	1800-306	PC10-25	VTT10B25	QV1-41	EV-1222
C88	4.7 25V	1800-607		TDC475M010EL	QDT1-48	SD10-4R79
C89	33 16V	1800-307	PC30-25	VTT33D25	QV1-63	EV-1325
C92	33 16V	1800-307	PC30-25	VTT33D25	QV1-63	EV-1325
C94	470 16V	1800-309	PC500-16	VTT470K16	QV1-151	EV-1250
C95	470 16V	1800-309	PC500-16	VTT470K16	QV1-151	EV-1250
C97	4.7 25V	1800-304	PC5-50	VTT4R7B50	QV1-27	EV-1319
C98	1 50V	1800-302	PC1-50	VTT1A50	QV1-11	EV-1615
C99	10 16V	1800-306	PC10-25	VTT10B25	QV1-41	EV-1222
C101	100 10V	1800-310	PC100-10	VTT100E10	QV1-93	EV-1130
C102	220 10V	1800-325	PC250-10	VTT220F10	QV1-115	EV-1140
C103	470 10V	1800-327	PC500-16	VTT470K16	QV1-149	EV-1150
C104	330 10V	1800-326	WBR300-35	VTT330G10	QV1-131	EV-1145
C107	1000 16V	1800-328	PC1000-16	VTT1000L16	QV1-183	EV-1260
C110	.1 16V	1800-501		TDC104M050EL	QDT1-2	SD50-R109
C120	47 10V	1800-316	PC50-16	VTT47D16	QV1-73	EV-1226
C126	1 50V	1800-302	PC1-50	VTT1A50	QV1-11	EV-1615
C135	220 10V	1800-325	PC250-10	VTT220F10	QV1-115	EV-1140
C140	10 6.3V	1800-602		TDC106M025FL	QDT1-64	SD25-109
C141	10 6.3V	1800-602		TDC106M025FL	QDT1-64	SD25-109
C158	1 50V	1800-302	PC1-50	VTT1A50	QV1-11	EV-1615
C199	1 50V	1800-302	PC1-50	VTT1A50	QV1-11	EV-1615
C211	2.2 25V	1800-303	PC2-100	VTT2R2A50	QV1-19	EV-1517
C218	4.7 25V	1800-304	PC5-50	VTT4R7B50	QV1-27	EV-1319
C224	1 50V	1800-302	PC1-50	VTT1A50	QV1-11	EV-1615
C226	1 50V	1800-302	PC1-50	VTT1A50	QV1-11	EV-1615
C302	220 16V	1800-314	PC250-25	VTT220H16	QV1-117	EV-1240
C304	3300 25V	1800-329	WBR3000-35	TC2530		TVA-1214
C605	.1 16V	1800-501		TDC104M050EL	QDT1-2	SD50-R109

PARTS LIST AND DESCRIPTION (CONTINUED)

(When ordering parts, state Model, Part Number, and Description.)

CAPACITORS (cont)

ITEM No.	RATING	MFGR. PART No.	REPLACEMENT DATA				
			CENTRALAB PART No.	CORNELL-DUBILIER PART No.	MALLORY PART No.	SPRAGUE PART No.	
						Q-LINE	GENERAL LINE
C1	39 NPO 50V				CN0439		10TCC-Q39
C2	.01 50V		DC-103	MGP01	TA110	QC2-141	TG-S10
C4	.01 50V		DC-103	MGP01	TA110	QC2-141	TG-S10
C5	.01 50V		DC-103	MGP01	TA110	QC2-141	TG-S10
C6	.01 50V		DC-103	MGP01	TA110	QC2-141	TG-S10
C7	47 NPO 50V		DTZ-47	NP047	CN0447		10TCC-Q47
C8	100 50V		DD-101	GP100	GP310		10TS-T10
C9	.001 50V		DD-102G	GP1000	GP210	QC2-81	5GA-D10
C10	.0047 50V		DD-472	GP4700	GP247		5GA-D47
C11	.0047 50V		DD-472	GP4700	GP247		5GA-D47
C12	.0047 50V		DD-472	GP4700	GP247		5GA-D47
C13	.0047 50V		DD-472	GP4700	GP247		5GA-D47
C15	.01 50V		DC-103	MGP01	TA110	QC2-141	TG-S10
C16	.01 50V		DC-103	MGP01	TA110	QC2-141	TG-S10
C17A	.01 50V			WMF1S1	EWF1A110	QF1-91	1PB-S10
C18	.039 50V			DPMS6S39	PVC6139		6PS-S39
C19	.022 50V		DC-203	MGP02	TA120	QC2-157	TG-S20
C20	.022 50V		DC-203	MGP02	TA120	QC2-157	TG-S20
C21	.022 50V		DC-203	MGP02	TA120	QC2-157	TG-S20
C22	.022 50V		DC-203	MGP02	TA120	QC2-157	TG-S20
C23	.022 50V			DPMS2S22	EWF1A122	QF1-127	1PB-S22
C24	56 NPO 50V				CN0456		10TCC-Q56
C25	.039 50V			DPMS6S39	PVC6139		6PS-S39
C26	.039 50V			DPMS6S39	PVC6139		6PS-S39
C27	.039 50V			DPMS6S39	PVC6139		6PS-S39
C28	.022 50V		DC-203	MGP02	TA120	QC2-157	TG-S20
C29	.039 50V			DPMS6S39	PVC6139		6PS-S39
C30	.039 50V			DPMS6S39	PVC6139		6PS-S39
C31	.039 50V			DPMS6S39	PVC6139		6PS-S39
C32	5 NPO 50V		DTZ-4R7	NP04P7	CN0547		10TCC-V47
C33	.022 50V		DC-203	MGP02	TA120	QC2-157	TG-S20
C34	.022 50V		DC-203	MGP02	TA120	QC2-157	TG-S20
C36	5 NPO 50V		DTZ-4R7	NP04P7	CN0547		10TCC-V47
	3 50V	(1)	DTZ-3R3	NP03P3	CN0533		10TCC-V33
C37	7 NPO 50V		DTZ-6R8	NP06P8	CN0568		10TCC-V68
	2 50V	(1)	DTZ-2R2	NP02P2	CN0522		10TCC-V22
C38	330 N750 50V		DTN-330	N330	CN7333		10TCU-T33
C40	.039 50V			DPMS6S39	PVC6139		6PS-S39
C41	.022 50V		DC-203	MGP02	TA120	QC2-157	TG-S20
C45	47 NPO 50V		DTZ-47	NP047	CN0447		10TCC-Q47
C46	.01 50V		DC-103	MGP01	TA110	QC2-141	TG-S10
C51	.022 50V			DPMS2S22	EWF1A122	QF1-127	1PB-S22
C54	22 NPO 50V		DTZ-22	NP022	CN0422		10TCC-Q22
C57	.022 50V		DC-203	MGP02	TA120	QC2-157	TG-S20
C61	.047 50V			DPMS2S47	EWF1A147	QF1-171	1PB-S47
C62	.047 50V			DPMS2S47	EWF1A147	QF1-171	1PB-S47
C64	.039 50V			DPMS6S39	PVC6139		6PS-S39
C71	.068 50V			WMF1S68	EWF1A168	QF1-195	1PB-S68
C72	.022 50V			DPMS2S22	EWF1A122	QF1-127	1PB-S22
C73	.1 50V			DPMS2P1	EWF1A010	QF1-215	1PB-P10
C74	.022 50V			DPMS2S22	EWF1A122	QF1-127	1PB-S22
C75	.1 50V			DPMS2P1	EWF1A010	QF1-215	1PB-P10
C80	.0068 50V			DPMS6S12	PVC6112		6PS-S12
	.01 50V	(1)	DC-103	MGP01	TA110	QC2-141	TG-S10
C82	.047 50V			DPMS2S47	EWF1A147	QF1-171	1PB-S47
	.022 50V	(1)	DC-203	MGP02	TA120	QC2-157	TG-S20
C83	.01 50V			WMF1S1	EWF1A110	QF1-91	1PB-S10
C85	.039 50V			DPMS6S39	PVC6139		6PS-S39
C86	.022 50V			DPMS2S22	EWF1A122	QF1-127	1PB-S22
C91	.1 50V			DPMS2P1	EWF1A010	QF1-215	1PB-P10
C93	68 NPO 50V		DTZ-68	NP068	CN0468		10TCC-Q68
C96	.1 50V			DPMS2P1	EWF1A010	QF1-215	1PB-P10
C100	.022 50V		DC-203	MGP02	TA120	QC2-157	TG-S20
C105	.022 50V		DC-203	MGP02	TA120	QC2-157	TG-S20
C106	.022 50V		DC-203	MGP02	TA120	QC2-157	TG-S20
C109	.022 50V		DC-203	MGP02	TA120	QC2-157	TG-S20
C111	18 NPO 50V				CN0418		10TCC-Q18
C112	18 NPO 50V				CN0418		10TCC-Q18
C113	.001 50V		DD-102G	GP1000	GP210	QC2-81	5GA-D10
C114	.001 50V		DD-102G	GP1000	GP210	QC2-81	5GA-D10
C115	100 NPO 50V		DTZ-100	NP0100	CN0310		10TCC-T10
C116	10 NPO 50V		DTZ-10	NP010	CN0410		10TCC-Q10
C117	1 NPO 50V				CN0510		10TCC-V10
C118	.022 50V		DC-203	MGP02	TA120	QC2-157	TG-S20
C121	.039 50V			DPMS6S39	PVC6139		6PS-S39
C122	47 NPO 50V		DTZ-47	NP047	CN0447		10TCC-Q47
C123	47 NPO 50V		DTZ-47	NP047	CN0447		10TCC-Q47
C124	.01 50V		DC-103	MGP01	TA110	QC2-141	TG-S10
C125	270 50V		DD-271	GP270	GP327		10TS-T27
C127	470 50V		DD-471	GP470	GP347		10TS-T47
C128	220 50V		DD-221		GP322		10TS-T22
C129	.01 50V		DC-103	MGP01	TA110	QC2-141	TG-S10
C130	10 NPO 50V		DTZ-10	NP010	CN0410		10TCC-Q10
C131	.01 50V			DPMS2S2	PVC212		2PS-S20
C133	.1 50V			DPMS2P1	EWF1A010	QF1-215	1PB-P10
C134	.1 50V			DPMS2P1	EWF1A010	QF1-215	1PB-P10
C136	470 50V		DD-471	GP470	GP347		10TS-T47
C137	220 50V		DD-221		GP322		10TS-T22
C138	.01 50V		DC-103	MGP01	TA110	QC2-141	TG-S10
C139	10 NPO 50V		DTZ-10	NP010	CN0410		10TCC-Q10
C142	68 NPO 50V		DTZ-68	NP068	CN0468		10TCC-Q68
C143	7 NPO 50V		DTZ-6R8	NP06P8	CN0568		10TCC-V68
C146	.022 50V		DC-203	MGP02	TA120	QC2-157	TG-S20
C147	470 50V		DD-471	GP470	GP347		10TS-T47
C148	220 50V		DD-221		GP322		10TS-T22
C149	.01 50V		DC-103	MGP01	TA110	QC2-141	TG-S10
C150	10 NPO 50V		DTZ-10	NP010	CN0410		10TCC-Q10
C151	.01 50V		DC-103	MGP01	TA110	QC2-141	TG-S10
C152	.01 50V		DC-103	MGP01	TA110	QC2-141	TG-S10
C153A	.1 50V			DPMS2P1	EWF1A010	QF1-215	1PB-P10

PARTS LIST AND DESCRIPTION (CONTINUED)

(When ordering parts, state Model, Part Number, and Description.)

CAPACITORS (cont)

ITEM No.	RATING	MFGR. PART No.	REPLACEMENT DATA				
			CENTRALAB PART† No.	CORNELL-DUBILIER PART No.	MALLORY PART No.	SPRAGUE PART No.	
						Q-LINE	GENERAL LINE
C153B	.01 50V		DC-103	MGP01	TA110	QC2-141	TG-S10
C154	10 NPO 50V		DTZ-10	NP010	CN0410		10TCC-Q10
C155	1 NPO 50V				CN0510		10TCC-V10
C156	.022 50V		DC-203	MGP02	TA120	QC2-157	TG-S20
C157	.039 50V			DPMS6S39	PVC6139		6PS-S39
C159	.0047 50V		DD-472	GP4700	GP247		5GA-D47
C160	.0047 50V		DD-472	GP4700	GP247		5GA-D47
C161	.0047 50V		DD-472	GP4700	GP247		5GA-D47
C162	.0047 50V		DD-472	GP4700	GP247		5GA-D47
C163	47 NPO 50V		DTZ-47	NP047	CN0447		10TCC-Q47
C164	68 NPO 50V		DTZ-68	NP068	CN0468		10TCC-Q68
C165	220 NPO 50V		DTZ-220				10TCC-T22
C166	.01 50V		DC-103	MGP01	TA110	QC2-141	TG-S10
	.0047 50V	(1)	DD-472	GP4700	GP247		5GA-D47
C167	390 50V		DD-391	GP390	GP339		10TS-T39
C168	.5 NPO 50V	1800-002					
C169	.1 50V			DPMS2P1	EWF1A010	QF1-215	1PB-P10
C170	470 50V		DD-471	GP470	GP347		10TS-T47
C172	.0047 50V		DD-472	GP4700	GP247		5GA-D47
C173	220 N220 50V	1800-098			*		10TCR-T22
C174	56 NPO 50V				CN0456		10TCC-Q56
C175	.1 50V			DPMS2P1	EWF1A010	QF1-215	1PB-P10
C176	56 NPO 50V				CN0456		10TCC-Q56
C177	.0047 50V		DD-472	GP4700	GP247		5GA-D47
C178	.0047 50V		DD-472	GP4700	GP247		5GA-D47
C183	.0047 50V		DD-472	GP4700	GP247		5GA-D47
C184	120 NPO 50V		DTZ-120		CN0312		10TCC-T12
	82 50V	(1)	DTZ-82	NP082	CN0482		10TCC-Q82
C185	.0047 50V		DD-472	GP4700	GP247		5GA-D47
C186	.0047 50V		DD-472	GP4700	GP247		5GA-D47
C187	.0047 50V		DD-472	GP4700	GP247		5GA-D47
C188	.1 50V			DPMS2P1	EWF1A010	QF1-215	1PB-P10
C189	.047 50V			DPMS2S47	EWF1A147	QF1-171	1PB-S47
	.0047 50V	(1)	DD-472	GP4700	GP247		5GA-D47
C190	.01 50V		DC-103	MGP01	TA110	QC2-141	TG-S10
C191	.1 50V			DPMS2P1	EWF1A010	QF1-215	1PB-P10
C192	.01 50V		DC-103	MGP01	TA110	QC2-141	TG-S10
C193	.022 50V		DC-203	MGP02	TA120	QC2-157	TG-S20
C194	.039 50V			DPMS6S39	PVC6139		6PS-S39
C195	10 NPO 50V		DTZ-10	NP010	CN0410		10TCC-Q10
	.01 50V	(1)	DC-103	MGP01	TA110	QC2-141	TG-S10
C196	.022 50V		DC-203	MGP02	TA120	QC2-157	TG-S20
C197	.022 50V		DC-203	MGP02	TA120	QC2-157	TG-S20
C198	.1 50V			DPMS2P1	EWF1A010	QF1-215	1PB-P10
	.039 50V	(1)		DPMS6S39	PVC6139		6PS-S39
C200	.01 50V			WMF1S1	EWF1A110	QF1-91	1PB-S10
C202	.022 50V		DC-203	MGP02	TA120	QC2-157	TG-S20
C204	.01 50V		DC-103	MGP01	TA110	QC2-141	TG-S10
C205	.01 50V		DC-103	MGP01	TA110	QC2-141	TG-S10
C206	.022 50V		DC-203	MGP02	TA120	QC2-157	TG-S20
C207	.01 50V		DC-103	MGP01	TA110	QC2-141	TG-S10
C208	.01 50V		DC-103	MGP01	TA110	QC2-141	TG-S10
C209	.01 50V		DC-103	MGP01	TA110	QC2-141	TG-S10
C210	.01 50V			WMF1S1	EWF1A110	QF1-91	1PB-S10
C213	.1 50V		DC-104	MGP1	TA010	QC2-233	TG-P10
C214	.01 50V		DC-103	MGP01	TA110	QC2-141	TG-S10
C215	.047 50V			DPMS2S47	EWF1A147	QF1-171	1PB-S47
	.022 50V	(1)		DPMS2S22	EWF1A122	QF1-127	1PB-S22
C216	.022 50V		DC-203	MGP02	TA120	QC2-157	TG-S20
C217	.022 50V		DC-203	MGP02	TA120	QC2-157	TG-S20
C219	.022 50V		DC-203	MGP02	TA120	QC2-157	TG-S20
C220	.047 50V			DPMS2S47	EWF1A147	QF1-171	1PB-S47
	.022 50V	(1)		DPMS2S22	EWF1A122	QF1-127	1PB-S22
C221	.1 50V		DC-104	MGP1	TA010	QC2-233	TG-P10
C222	.1 50V		DC-104	MGP1	TA010	QC2-233	TG-P10
C223	.022 50V		DC-203	MGP02	TA120	QC2-157	TG-S20
C225	.0047 50V		DD-472	GP4700	GP247		5GA-D47
C227	.022 50V		DC-203	MGP02	TA120	QC2-157	TG-S20
C228	.022 50V		DC-203	MGP02	TA120	QC2-157	TG-S20
C231	.1 50V			DPMS2P1	EWF1A010	QF1-215	1PB-P10
C233	.1 50V		DC-104	MGP1	TA010	QC2-233	TG-P10
C236	33 NPO 50V		DTZ-33	NP033	CN0433		10TCC-Q33
C239	.1 50V		DC-104	MGP1	TA010	QC2-233	TG-P10
C240	.01 50V			WMF1S1	EWF1A110	QF1-91	1PB-S10
C242	47 NPO 50V		DTZ-47	NP047	CN0447		10TCC-Q47
C243	.0047 50V		DD-472	GP4700	GP247		5GA-D47
C244	33 NPO 50V		DTZ-33	NP033	CN0433		10TCC-Q33
C245	.047 50V	(1)	DC-503	MGP05	TA150	QC2-207	TG-S50
C247	.047 50V		DC-503	MGP05	TA150	QC2-207	TG-S50
C248	.022 50V		DC-203	MGP02	TA120	QC2-157	TG-S20
C249	.01 50V		DC-103	MGP01	TA110	QC2-141	TG-S10
C250	.01 50V		DC-103	MGP01	TA110	QC2-141	TG-S10
C251	.01 50V		DC-103	MGP01	TA110	QC2-141	TG-S10
C255	.001 50V		DD-102G	GP1000	GP210	QC2-81	5GA-D10
C257	27 NPO 50V				CN0427		10TCC-Q27
	68 NPO 50V	(1)	DTZ-68	NP068	CN0468		10TCC-Q68
C258	330 50V		DD-331	GP330	GP333		10TS-T33
C259	.039 50V			DPMS6S39	PVC6139		6PS-S39
C260	.047 50V		DC-503	MGP05	TA150	QC2-207	TG-S50
C261	.01 50V		DC-103	MGP01	TA110	QC2-141	TG-S10
C262	.01 50V		DC-103	MGP01	TA110	QC2-141	TG-S10
C265	.047 50V		DC-503	MGP05	TA150	QC2-207	TG-S50
C266	.047 50V		DC-503	MGP05	TA150	QC2-207	TG-S50
C268	100 NPO 50V		DTZ-100	NP0100	CN0310		10TCC-T10
C269	270 50V		DD-271	GP270	GP327		10TS-T27
C270	470 50V		DD-471	GP470	GP347		10TS-T47
C277	.047 50V		DC-503	MGP05	TA150	QC2-207	TG-S50
C278	.047 50V		DC-503	MGP05	TA150	QC2-207	TG-S50
C280	27 NPO 50V				CN0427		10TCC-Q27
C281	.047 50V		DC-503	MGP05	TA150	QC2-207	TG-S50
C282	.047 50V		DC-503	MGP05	TA150	QC2-207	TG-S50
C285	.0047 50V		DD-472	GP4700	GP247		5GA-D47
C286	.0047 50V		DD-472	GP4700	GP247		5GA-D47
C287	.1 50V		DC-104	MGP1	TA010	QC2-233	TG-P10
C288	5 NPO 50V		DTZ-4R7	NP04P7	CN0547		10TCC-V47

PARTS LIST AND DESCRIPTION (CONTINUED)

(When ordering parts, state Model, Part Number, and Description.)

CAPACITORS (cont)

ITEM No.	RATING	MFGR. PART No.	REPLACEMENT DATA				
			CENTRALAB PART No.	CORNELL-DUBILIER PART No.	MALLORY PART No.	SPRAGUE PART No.	
						Q-LINE	GENERAL LINE
C289	.001 50V		DD-102G	GP1000	GP210	QC2-81	5GA-D10
C290	.047 50V			DPMS2S47	EWF1A147	QF1-171	1PB-S47
C301	.039 50V			DPMS6S39	PVC6139		6PS-S39
C303	.039 50V			DPMS6S39	PVC6139		6PS-S39
C308	.01 50V		DC-103	MGP01	TA110	QC2-141	TG-S10
C310	.01 50V		DC-103	MGP01	TA110	QC2-141	TG-S10
C401	.047 50V			DPMS2S47	EWF1A147	QF1-171	1PB-S47
C403	.01 50V		DC-103	MGP01	TA110	QC2-141	TG-S10
C404	.01 50V		DC-103	MGP01	TA110	QC2-141	TG-S10
C413	.01 50V		DC-103	MGP01	TA110	QC2-141	TG-S10
C414	.01 50V		DC-103	MGP01	TA110	QC2-141	TG-S10
C415	.01 50V		DC-103	MGP01	TA110	QC2-141	TG-S10
C416	.01 50V		DC-103	MGP01	TA110	QC2-141	TG-S10
C418	.1 50V		DC-104	MGP1	TA010	QC2-233	TG-P10
C419	.01 50V		DC-103	MGP01	TA110	QC2-141	TG-S10
C420	.001 50V		DD-102G	GP1000	GP210	QC2-81	5GA-D10
C421	.001 50V		DD-102G	GP1000	GP210	QC2-81	5GA-D10
C422	.022 50V		DC-203	MGP02	TA120	QC2-157	TG-S20
C423	.022 50V		DC-203	MGP02	TA120	QC2-157	TG-S20
C424	.01 50V		DC-103	MGP01	TA110	QC2-141	TG-S10
C425	.01 50V		DC-103	MGP01	TA110	QC2-141	TG-S10
C426	.01 50V		DC-103	MGP01	TA110	QC2-141	TG-S10
C601	8 NPO 50V		DTZ-6R8	NP06P8	CN0568		10TCC-V68
C602	.0047 50V		DD-472	GP4700	GP247		5GA-D47
C603	.01 50V		DC-103	MGP01	TA110	QC2-141	TG-S10
C604	39 NPO 50V				CN0439		10TCC-Q39
C606	.01 50V		DC-103	MGP01	TA110	QC2-141	TG-S10
C701	.01 50V		DC-103	MGP01	TA110	QC2-141	TG-S10
C703	.01 50V		DC-103	MGP01	TA110	QC2-141	TG-S10
C704	.01 50V		DC-103	MGP01	TA110	QC2-141	TG-S10
C705	.01 50V		DC-103	MGP01	TA110	QC2-141	TG-S10
CC1	50V	1800-103					
CC2	50V	1800-103					
CT1	20 50V	1900-203					
CT2	20 50V	1900-203					
CT3	20 50V	1900-203					
CT4	20 50V	1900-203					
CT5	20 50V	1900-203					
CT6	20 50V	1900-203					
CT7	20 50V	1900-203					

* Not normally in distributor's stock. Available thru distributor on order to manufacturer.
(1) Used in some versions.

CONTROLS (All wattages 1/2 watt, or less, unless listed)

ITEM No.	FUNCTION	RESISTANCE	REPLACEMENT DATA				
			MFGR. PART No.	CENTRALAB PART No.	CLAROSTAT PART No.	MALLORY PART No.	TRW PART No.
RT301	Volt Adj	300	1900-221	T-300		MTC32L1	X201R351B
VR1	Reg Meter	20K	1900-223				U260R253B
VR2	RF Gain Range	200K	1900-224				U260R254B
VR3	Squelch Range	100K	1900-219				U260R104B
VR4	Balance	50K	1900-218				U260R503B
VR5	AM Gain Range	500K	1900-225				U260R504B
VR7	AM AMC	5000	1900-216				U260R502B
VR8	AM Reg	10K	1900-217				U260R103B
VR9	34.9825MHz	5000	1900-216				U260R502B
VR12	Xmit Meter	100K	1900-219				U260R104B
VR14	Mod	100K	1900-219				U260R104B
VR15	Bias	300	1900-222				
VR16	Bias	300	1900-222				
VR401	Clarifier	20K	3000-105				
VR402	RF Meter	100K	3000-114				
VR403-1	SWR/CAL	5000	3000-116(18)				
VR403-2	SWR/CAL	5000					
VR404	Squelch	100K	3000-120(19)				
VR405	Volume/Power Switch	10K					
VR406	Tone	10K	3000-105				
VR408	Mic Gain	10K	3000-105				

(18) Includes VR403-1 and VR403-2.
(19) Includes VR404, VR405 and S406.

PARTS LIST AND DESCRIPTION (CONTINUED)

(When ordering parts, state Model, Part Number, and Description.)

RESISTORS (Power and Special)

ITEM No.	RATING	REPLACEMENT DATA	
		WORKMAN PART No.	MFGR. PART No.
R404	10 5W	5W-SQ-10	1900-601
RR1	Resistor Network		1800-104

ITEM No.	RATING	REPLACEMENT DATA	
		WORKMAN PART No.	MFGR. PART No.
RR401	Resistor Network		1900-402
RR402	Resistor Network		1900-402

COILS (RF-IF)

ITEM No.	FUNCTION	REPLACEMENT DATA			REMARKS
		PART No.	OTHER IDENTIFICATION	MILLER PART No.	
L1	Noise Blanker (23.5MHz)	2200-001	LA-029	CBS740-T	
L2	Noise Blanker (23.5MHz)	2200-054	LA-060		
L3	Rec Antenna (27MHz)	2200-024	LA-152		
L4	Rec RF (27MHz)	2200-026	LA-156		
L5	IF (7.8MHz)	2200-033	LA-178		
L6	IF (7.8MHz)	2200-029	LA-179		
L7	IF (7.8MHz)	2200-022	LA-038	CBS512-7TC	
L8	IF (7.8MHz)	2200-023	LA-096	CBS511-7TC	
L9	RF Choke (470uH)	2200-040	LZ-012		
L10	Filter (56mH)	2200-041	LZ-015		
L11	Filter (68mH)	2200-042	LZ-015		
L12	RF Choke (470uH)	2200-040	LZ-012		
L13	RF Choke (470uH)	2200-040	LZ-012		
L14	RF Choke (470uH)	2200-040	LZ-012		
L16	VCO	2200-055	LA-195		
L17	VCO	2200-031	LA-191		
L19	RF Choke (100uH)	2200-202	LZ-012		
L20	RF Choke (470uH)	2200-040	LZ-012		
L21	RF Choke (470uH)	2200-040	LZ-012		
L22	RF Choke (470uH)	2200-040	LZ-012		
L23	RF Choke (470uH)	2200-040	LZ-012		
L24	Tripler (33MHz)	2200-030	LA-190		
L25	RF Choke (470uH)	2200-040	LZ-012		
L27	TVI Trap (54MHz)	2200-020	LC-018	CB304	
L28	Antenna Match	2200-060	LE-068		
L29	Pi Filter	2200-060	LE-068		
L30	Final (27MHz)	2200-056	LC-019	CB305	
L31	RF Choke	2200-036	LD-018		
L32	Xmit Driver (27MHz)	2200-020	LC-018	CB304	
L33	RF Choke	2200-036	LD-018		
L34	RF Choke	2200-036	LD-018		
L35	Xmit Predriver (27MHz)	2200-037	LD-057		
L36	Xmit Amp (27MHz)	2200-037	LD-057		
L37	Xmit Mixer (27MHz)	2200-027	LA-196		
L38	RF Choke (470uH)	2200-040	LZ-012		
L39	Carrier Inj (7.8MHz)	2200-022	LA-038	CBS512-7TC	
L43	RF Choke (1uH)	2200-206	LZ-002		
L44	RF Choke (1uH)	2200-206	LZ-002		
L45	RF Choke (100uH)	2200-202	LZ-012		
L46	RF Choke (10uH)	2200-205	LZ-001		
L48	IF (7.8MHz)	2200-061	LD-096		
L50	RF Choke (470uH)	2200-040	LZ-012		
L401	RF Choke	2200-059	LD-089		
L405	RF Choke	2200-059	LD-089		
L406	RF Choke	2200-059	LD-089		
L407	RF Choke	2200-035	LD-013		
L408	RF Choke	2200-035	LD-013		
L409	RF Choke	2200-059	LD-089		
L410	RF Choke	2200-059	LD-089		
L421	RF Choke	2200-062	LD-094		
L701	RF Choke	2200-059	LD-089		
L702	RF Choke	2200-059	LD-089		
L703	RF Choke	2200-059	LD-089		

FILTER CHOKE

ITEM No.	RATINGS			REPLACEMENT DATA			NOTES
	CURRENT (Measured)	DC RES.	INDUCTANCE (0 CURRENT 1000~)	MFGR. PART No.	THORDARSON PART No.	TRIAD PART No.	
T402	2.4A	.238	2.85mH	2300-003			

PARTS LIST AND DESCRIPTION (CONTINUED)

(When ordering parts, state Model, Part Number, and Description.)

TRANSFORMER (Audio Output)

ITEM No.	IMPEDANCE		REPLACEMENT DATA			NOTES
	PRI.	SEC.	MFGR. PART No.	THORDARSON PART No.	TRIAD PART No.	
T1	5.12	8	2600-006 TF-109(1)		MCB-20	(1) Number on unit.

TRANSFORMER (Power)

ITEM No.	RATING		REPLACEMENT DATA			NOTES
	PRI.	SEC. 1	MFGR. PART No.	THORDARSON PART No.	TRIAD PART No.	
T401	120V AC @ .460A	20.0V @ 4.68A	2600-007 TF-108(1)			(1) Number on unit.

SPEAKER

ITEM No.	TYPE	REPLACEMENT DATA		NOTES
		MFGR. PART No.	QUAM PART No.	
SP401	4" PM, 8 Ohms	3100-001		

FUSE DEVICES

ITEM No.	DESCRIPTION	REPLACEMENT DATA						
		PART No.		BUSS PART No.		LITTELFUSE PART No.		WORKMAN PART No.
		DEVICE	HOLDER	DEVICE	HOLDER	DEVICE	HOLDER	DEVICE
F401 F402	4 Amp 4 Amp	2800-003 2800-003	2700-004 2800-004	AGC4 AGC4	HDJ HKP	311004 311004	150145 342001L	

MICROPHONE

ITEM No.	REPLACEMENT DATA				CONNECTION DATA						
	MFGR. PART No.	GC PART No.	GC NOISE CANCEL	GC POWER	GC CONNECTOR	GC Red	GC Shield	GC Yellow	GC Blue	GC White	GC Black
MIC	3200-003	18-032	18-034	18-010	18-092	2	1	3	NC	NC	1

PARTS LIST AND DESCRIPTION (CONTINUED)

(When ordering parts, state Model, Part Number, and Description.)

MISCELLANEOUS

ITEM No.	PART NAME	PART No.	NOTES
D401	LED	2000-306	Channel Display (13.5mA @ 1.85V)
D403	LED	2000-307	LSB Indicator (15mA @ 1.62V)
D404	LED	2000-307	USB Indicator (15mA @ 1.62V)
D405	LED	2000-307	AM Indicator (15mA @ 1.62V)
D407	LED	2000-307	TX (12mA @ 1.68V)
FT1	Crystal Filter	2100-001	7.8MHz
FT2	Crystal Filter	2100-002	7.8MHz
J401	Jack	1100-002	Antenna
J402	Jack	1100-004	Microphone
J403	Jack	1100-001	PA
J404	Jack	1100-001	External Speaker
J405	Jack	1100-014	Phone
J406	Jack	1100-003	DC Power
J407	Jack	1100-016	AC Power
L26	Ferrite Bead	2200-057	
L47	Ferrite Bead	2200-058	
M401	Meter	2900-005	S/RF
M402	Meter	2900-007	SWR/MOD
M	Clock	3600-001	Digital
PL401	Lamp	2500-001	S/RF Meter (44mA @ 11.64V)
PL402	Lamp	2500-001	SWR/MOD (44mA @ 11.64V)
REL1	Relay	2400-002	Xmit/Rec
S401	Switch	3000-003	NB
S402	Switch	3000-103	AM/USB/LSB
S403	Switch	3000-003	SWR/RF-MOD
S404	Switch		AC Power (Part of Clock)
S405	Switch	3000-003	CB/PA
S406	Switch		Power (Part of Volume Control)
S408	Switch	3000-105	Channel Selector
S409	Switch		Power Conversion (Part of AC Power Jack)
X1	Crystal	2100-004	7.8025MHz
X2	Crystal	2100-005	7.7975MHz
X3	Crystal	2100-008	11.285MHz
X4	Crystal	2100-006	11.2842MHz
X5	Crystal	2100-009	10.240MHz
X6	Crystal	2100-007	11.865MHz
	Printed Circuit Board	3500-014	Main (PC-346AA)
	Printed Circuit Board	3500-022	Channel Selector Switch (PC-259AA)
	Printed Circuit Board	3500-009	Power Supply (PC-006EB)
	Printed Circuit Board	3500-023	Push Switch (PC-277AA)
	Printed Circuit Board	3500-024	Noise Blanker (PC-244AA)
	Printed Circuit Board	3500-025	PA-External Speaker Jack (PC-246AA)
	Printed Circuit Board	3500-026	Microphone Jack (PC-275AA)
	Printed Circuit Board	3500-028	TR401-TR402 (PC-298AA)
	Socket	1400-002	Crystal (SK-001)
	Socket	1400-001	Relay (SK-018)
	Power Cord	2700-004	AC
	Power Cord	2700-001	DC

CABINETS & CABINET PARTS (When ordering specify model, chassis & color)

ITEM	PART No.
Knob, Channel	1300-004
Knob, Volume	1300-012
Knob, Squelch	1300-011
Knob, Mike Gain/RF Gain/SWR-CAL/ Clarifier/Tone	1300-002
Knob, Mode Switch	1300-005
Knob, SWR-RF MOD/NB/PA-CB	1300-003
Knob, Clock (Alarm-Time Set)	1300-015
Knob, Clock (Select)	1300-014

ITEM	PART No.
Knob, Clock (Sleep)	1300-013
Cabinet (Transceiver)	3300-815
Plate (Transceiver, Bottom)	3300-810
Cabinet (Speaker)	3300-811
Plate (Speaker Bottom)	3400-512
Microphone Hanger	3300-401
Escutcheon (Transceiver)	3400-511
Escutcheon (Speaker)	3400-513

WIRING DATA

General-use Hook-up Wire (available in 5 colors) BELDEN No. 8523
Shielded Hook-up Wire (spiral wrapped) . . . . . BELDEN No. 8421
(braided) . . . . . BELDEN No. 8401
Speaker Cable (available in 4 colors) . . . . . BELDEN No. 8782
Bonding Strap . . . . . BELDEN No. 8672
AC Power Cord . . . . . (6') BELDEN No. 17106
(9') BELDEN No. 17109

Coiled Microphone Cable
3-conductor (1 shielded) 23AWG BELDEN No. 9471 (5')
BELDEN No. 8497 (6')
BELDEN No. 9472 (7-1/2')
28AWG BELDEN No. 9466 (6')
31AWG BELDEN No. 9468 (10')
4-conductor (unshielded) 23AWG BELDEN No. 8415 (6')
5-conductor (1 shielded) 28AWG BELDEN No. 9467 (6')
BELDEN No. 9465 (7-1/2')

For Supplier Address See PHOTOFACT Index

NOTE

Repair or adjustment of transmitter circuits must be under supervision of a person with first-or second-class radiotelephone license.
(Refer to FCC Rules and Regulations Part 95, Subpart C & D.)

The frequency of the transmitter should be checked periodically with a secondary frequency standard to insure proper and legal operation.

Best results will be obtained when adjusting the final RF output circuit if the antenna normally used is connected and the chassis is as nearly in the cabinet as possible.

Connect either 50-ohm dummy load or the normally used antenna system.

MODEL 1-673

MANUFACTURER'$ SPECIFICATIONS

RECEIVER

1. Frequency Range (MHz)	: 26.965- 27.405.
2. Sensitivity	: 0.5uV for 10db S+N/N
3. Selectivity	5KHz minimum at 6db down
4. Adj. Channel Rejection	: More than 60db.
5. Audio Power output at 8 ohms	: More than 4W at 10% distortion
6. Audio fidelity (1KHz=0db, 6db down)	: 400Hz-2,000Hz
7. A.G.C. figure of merit (Input 94db for 10db range)	: More than 80db
8. Squelch sensitivity (Threshold)	: Less than 0.5uV
9. Spurious Rejection	: More than 45db

TRANSMITTER

1. Frequency Range (MHz)	: 26.965— 27.405.
2. RF Output Power	: 4W average
3. Modulation Capability	: 100%
4. Spurious Suppression	: More than 60db.
5. Frequency Tolerance	: ±0.005%

Courtesy of the Manufacturer

HOWARD W. SAMS & CO., INC. Indianapolis, Indiana 46206

ALIGNMENT INSTRUCTIONS

CAUTION: Use isolation transformer or observe polarity when connecting test equipment.
Maintain line voltage at 120V AC. Allow a 15-minute warm-up period.

Adjustments made with 13.8-volt DC input.
Connect low sides of test equipment to ground unless specified otherwise.
Connect 50-ohm dummy load or antenna before keying transmitter.

Suggested Alignment Tools:	GC ELECTRONICS:
T201	5009, 8728-A, 8728
T101, T102	9440
L403, L404, T401, T402	9091, 8728-A, 8728

SYNTHESIZER ALIGNMENT

TEST EQUIPMENT	TRANSCEIVER	ADJUST	REMARKS
Input of frequency counter to TP1 (PLL-1, Pin 2).	Ch. 1		Check for 10.240MHz.
Input of frequency counter to TP2 (PLL-1, Pin 19).	Ch. 1		Check for 37.660MHz. Check all channels. (See Truth Chart for correct frequencies).
Input of frequency counter to TP4 (PLL-1, Pin 23).	Ch. 1, Xmt		Check for 26.965MHz. Check all channels. (See Truth Chart for correct frequencies).

RECEIVER ALIGNMENT

Connect an AC VTVM or AF wattmeter across speaker voice coil.
Adjust volume control to obtain a suitable indication.
Set generator output low enough to prevent AGC limiting.

TEST EQUIPMENT	TRANSCEIVER	ADJUST	REMARKS
Output of signal generator thru .01uF to TP5 (Q201, base). 455kHz, 1000Hz @ 30% modulation.	Ch. 19, Squelch-MINIMUM ANL-Off	T201	Adjust for maximum output.
Output of signal generator thru .01uF to antenna Jack. 27.185MHz, 1000Hz @ 30% modulation.	Ch. 19, Squelch-MINIMUM ANL-Off	T102,T101	Adjust for maximum output. If necessary readjust T201.

TRANSMITTER ALIGNMENT

Connect an RF wattmeter and 50-ohm, 25-watt dummy load to antenna connector.
NOTE: Be sure to check transmit frequency and power on all active channels after alignment of transmitter.
See page 4 for channel frequencies.

TEST EQUIPMENT	TRANSCEIVER	ADJUST	REMARKS
	Ch. 19	T401,T402, L403,L404	Adjust for maximum.
	Ch. 19	T402	Adjust for 4 watts maximum.

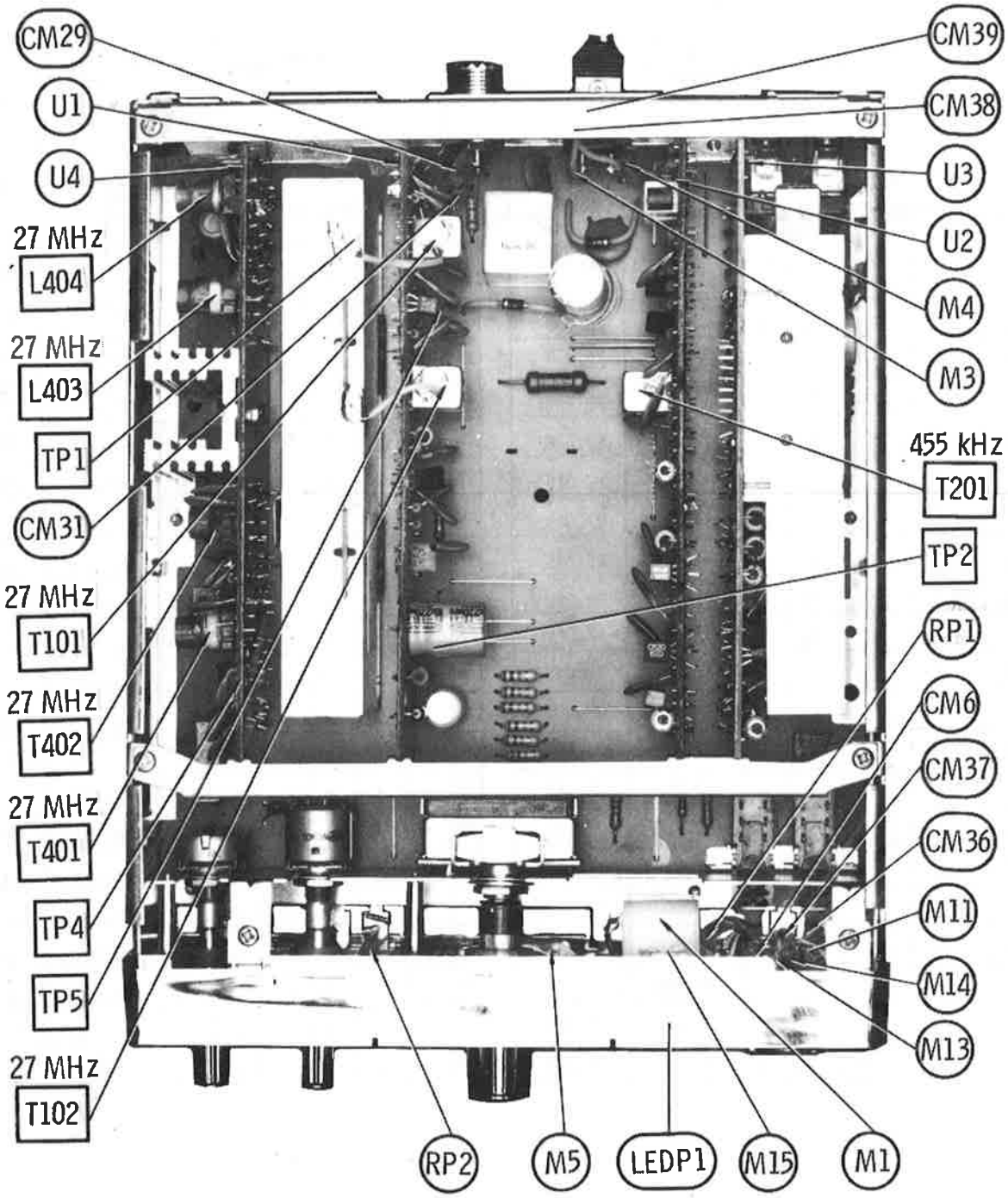

CHASSIS-BOTTOM

TRUTH CHART

1 = 7.58 Volts 0 = 0 Volts

CHANNEL	PLL-1 PROGRAM DIVIDER PINS 6	5	7	8	10	9	REC VCO OUTPUT IN MHz AT TP2	XMT VCO OUTPUT IN MHz AT TP3
1	0	0	0	0	0	0	37.660	26.965
2	0	0	0	0	0	1	37.670	26.975
3	0	0	0	0	1	0	37.680	26.985
4	0	0	0	1	0	0	37.700	27.005
5	0	0	0	1	0	1	37.710	27.015
6	0	0	0	1	1	0	37.720	27.025
7	0	0	0	1	1	1	37.730	27.035
8	0	0	1	0	0	1	37.750	27.055
9	0	0	1	0	1	0	37.760	27.065
10	0	0	1	0	1	1	37.770	27.075
11	0	0	1	1	0	0	37.780	27.085
12	0	0	1	1	1	0	37.800	27.105
13	0	0	1	1	1	1	37.810	27.115
14	0	1	0	0	0	0	37.820	27.125
15	0	1	0	0	0	1	37.830	27.135
16	0	1	0	0	1	1	37.850	27.155
17	0	1	0	1	0	0	37.860	27.165
18	0	1	0	1	0	1	37.870	27.175
19	0	1	0	1	1	0	37.880	27.185
20	0	1	1	0	0	0	37.900	27.205

1 = 7.58 Volts 0 = 0 Volts

CHANNEL	PLL-1 PROGRAM DIVIDER PINS 6	5	7	8	10	9	REC VCO OUTPUT IN MHz AT TP2	XMT VCO OUTPUT IN MHz AT TP3
21	0	1	1	0	0	1	37.910	27.215
22	0	1	1	0	1	0	37.920	27.225
23	0	1	1	1	0	1	37.950	27.255
24	0	1	1	0	1	1	37.930	27.235
25	0	1	1	1	0	0	37.940	27.235
26	0	1	1	1	1	0	37.960	27.265
27	0	1	1	1	1	1	37.970	27.275
28	1	0	0	0	0	0	37.980	27.285
29	1	0	0	0	0	1	37.990	27.295
30	1	0	0	0	1	0	38.000	27.305
31	1	0	0	0	1	1	38.010	27.315
32	1	0	0	1	0	0	38.020	27.325
33	1	0	0	1	0	1	38.030	27.335
34	1	0	0	1	1	0	38.040	27.345
35	1	0	0	1	1	1	38.050	27.355
36	1	0	1	0	0	0	38.060	27.365
37	1	0	1	0	0	1	38.070	27.375
38	1	0	1	0	1	0	38.080	27.385
39	1	0	1	0	1	1	38.090	27.395
40	1	0	1	1	0	0	38.100	27.405

A Howard W. Sams CIRCUITRACE® Photo

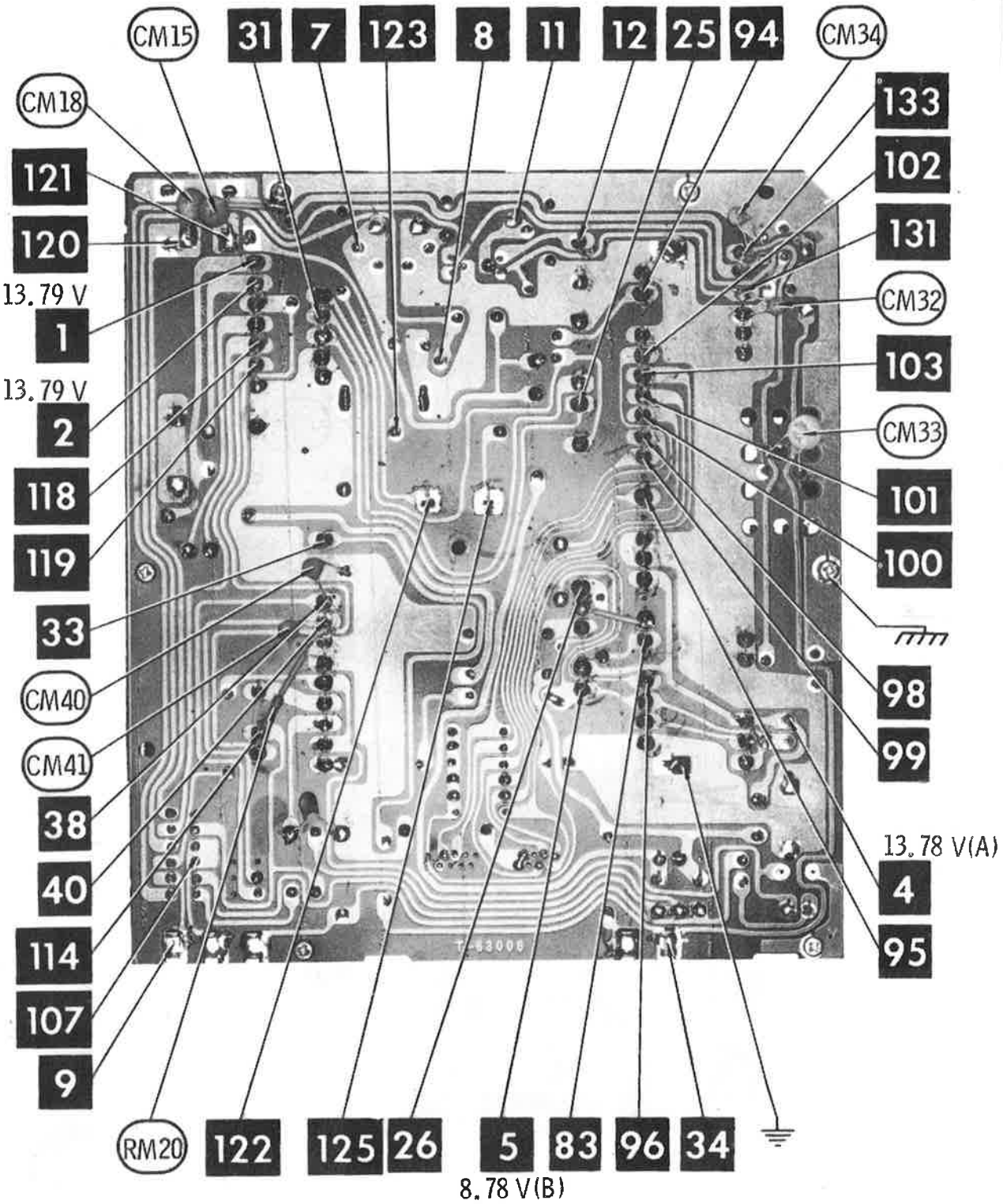

MOTHER BOARD

A Howard W. Sams CIRCUITRACE® Photo

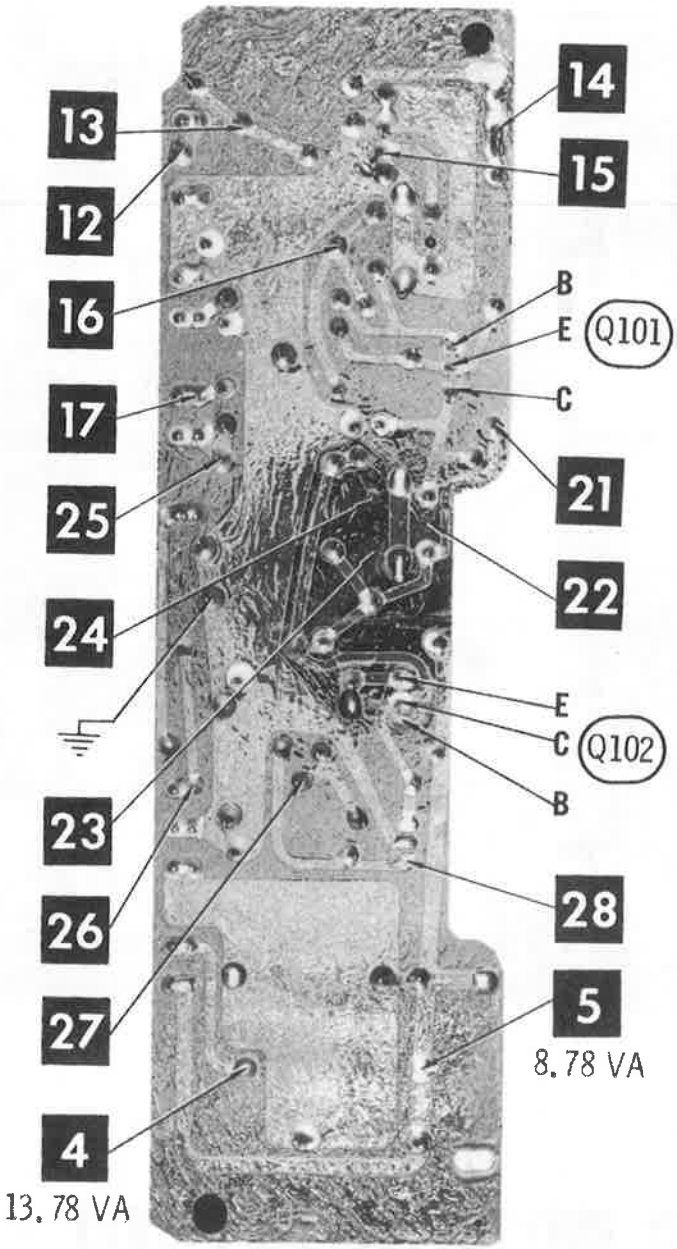

U-1 BOARD

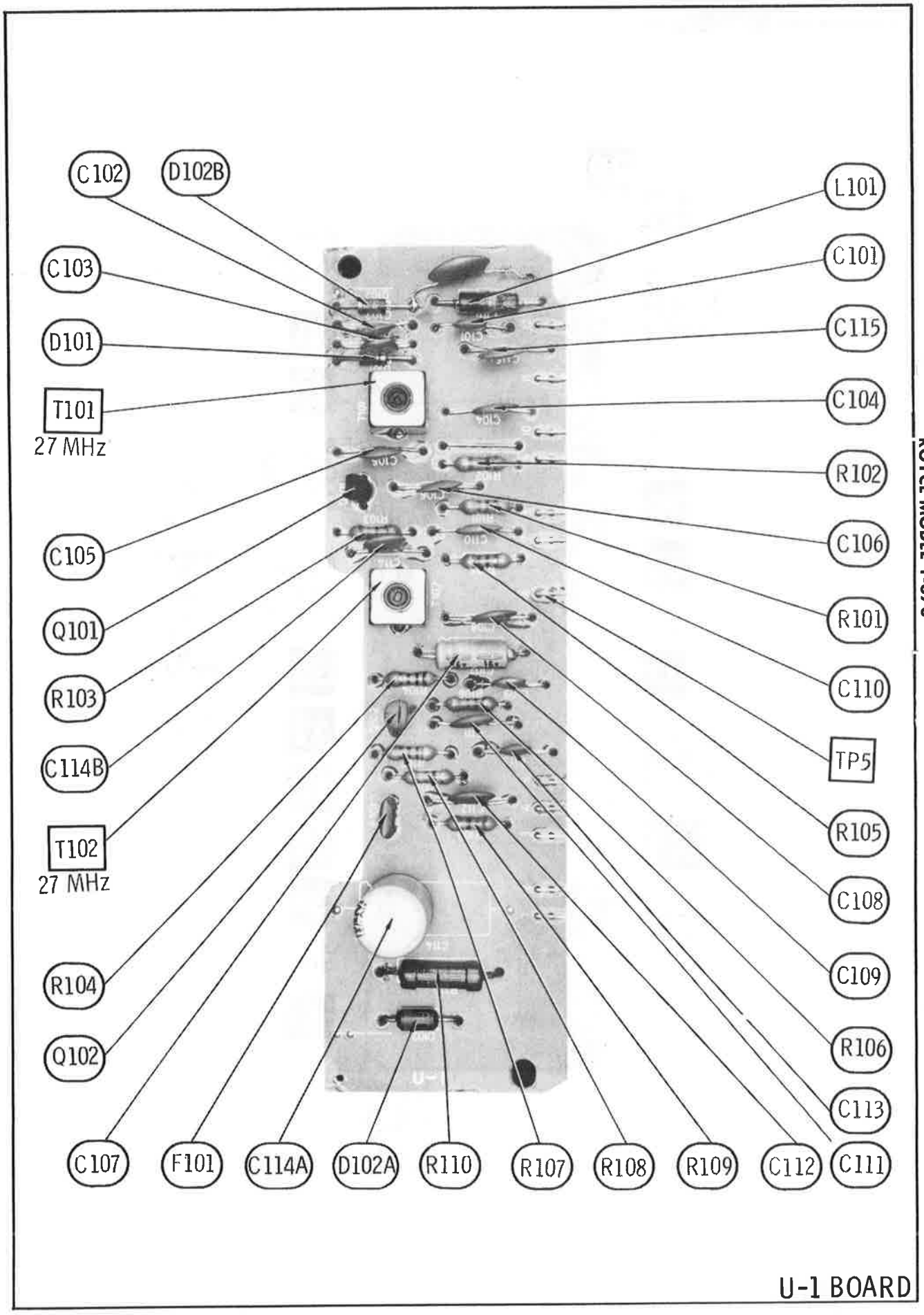
C102
D102B
C103
D101
T101
27 MHz
C105
Q101
R103
C114B
T102
27 MHz
R104
Q102
C107
F101
C114A
D102A
R110
R107
R108
R109
C112
C111
L101
C101
C115
C104
R102
C106
R101
C110
TP5
R105
C108
C109
R106
C113
U-1 BOARD

A Howard W. Sams CIRCUITRACE® Photo

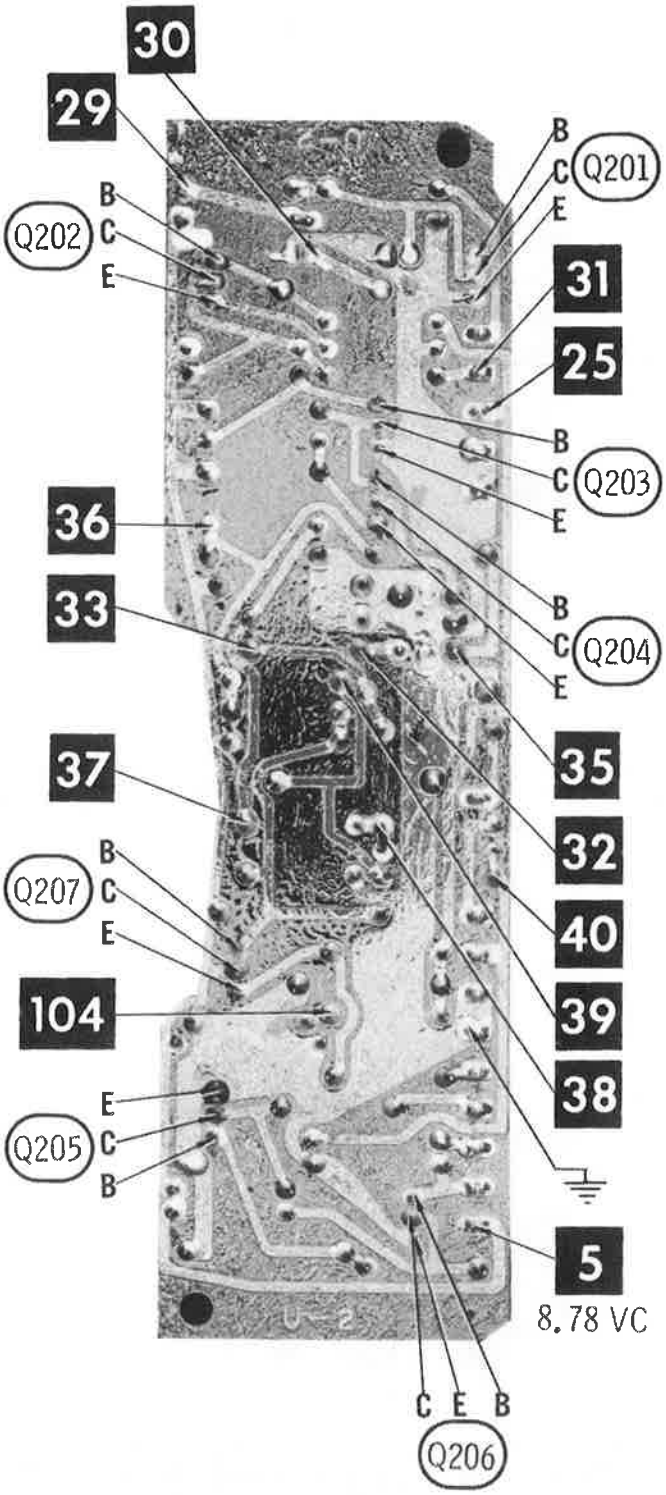

U-2 BOARD

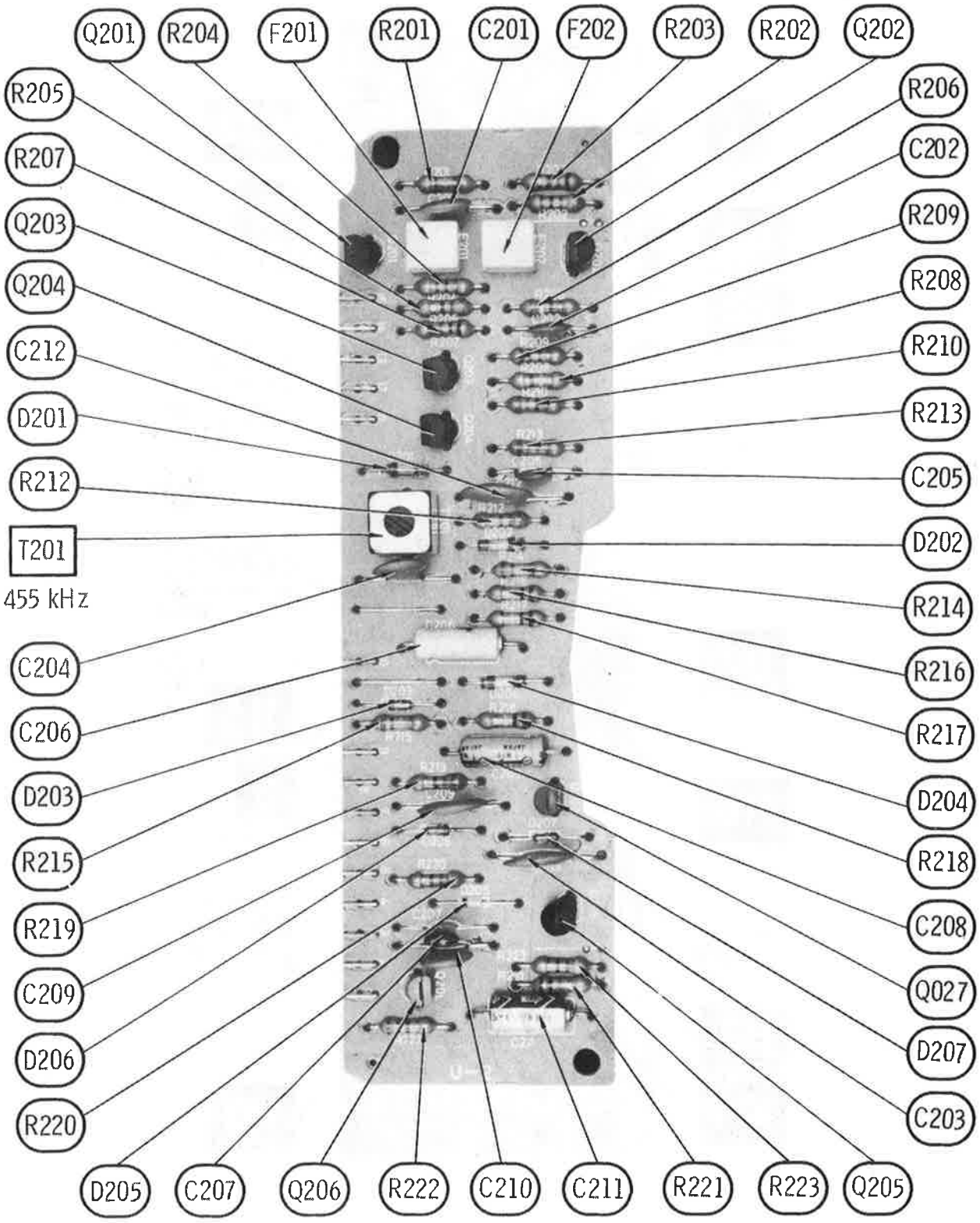
Q201
R204
F201
R201
C201
F202
R203
R202
Q202
R205
R206
R207
C202
Q203
R209
Q204
R208
C212
R210
D201
R213
R212
C205
T201
D202
455 kHz
R214
C204
R216
C206
R217
D203
D204
R215
R218
R219
C208
C209
Q027
D206
D207
R220
C203
D205
C207
Q206
R222
C210
C211
R221
R223
Q205

U-2 BOARD

A Howard W. Sams CIRCUITRACE Photo

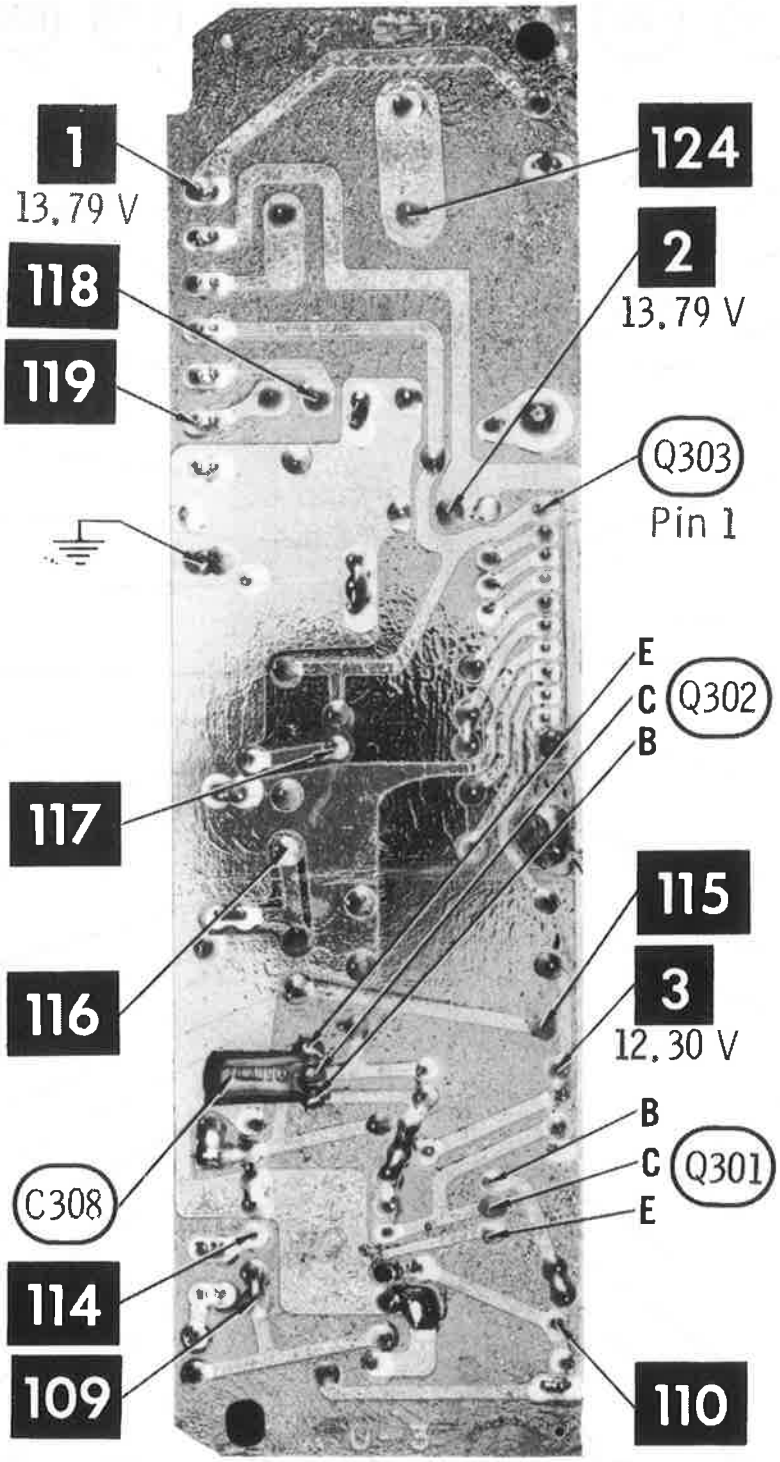

U-3 BOARD

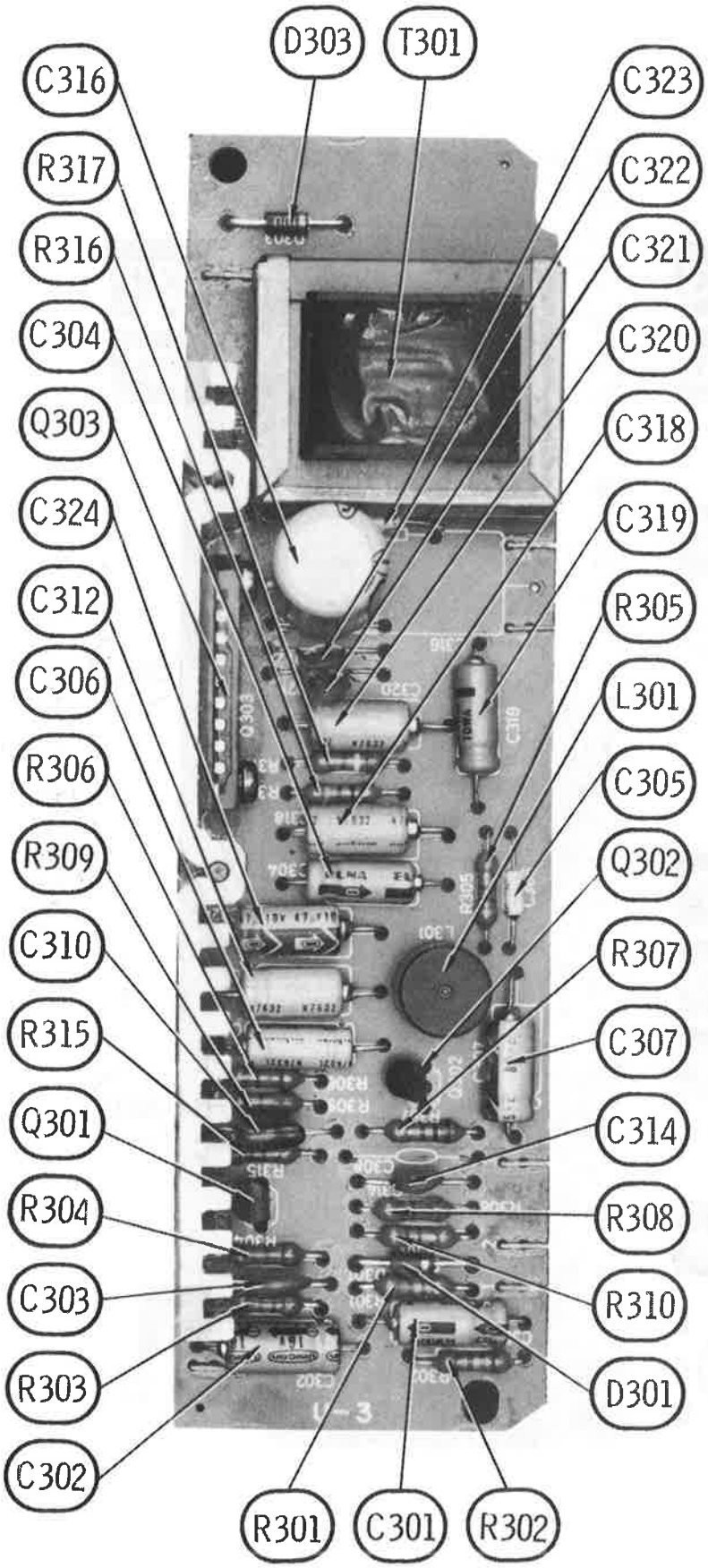
D303
T301
C316
R317
R316
C304
Q303
C324
C312
C306
R306
R309
C310
R315
Q301
R304
C303
R303
C302
C323
C322
C321
C320
C318
C319
R305
L301
C305
Q302
R307
C307
C314
R308
R310
D301
R301
C301
R302

U-3 BOARD

A Howard W. Sams CIRCUITRACE® Photo

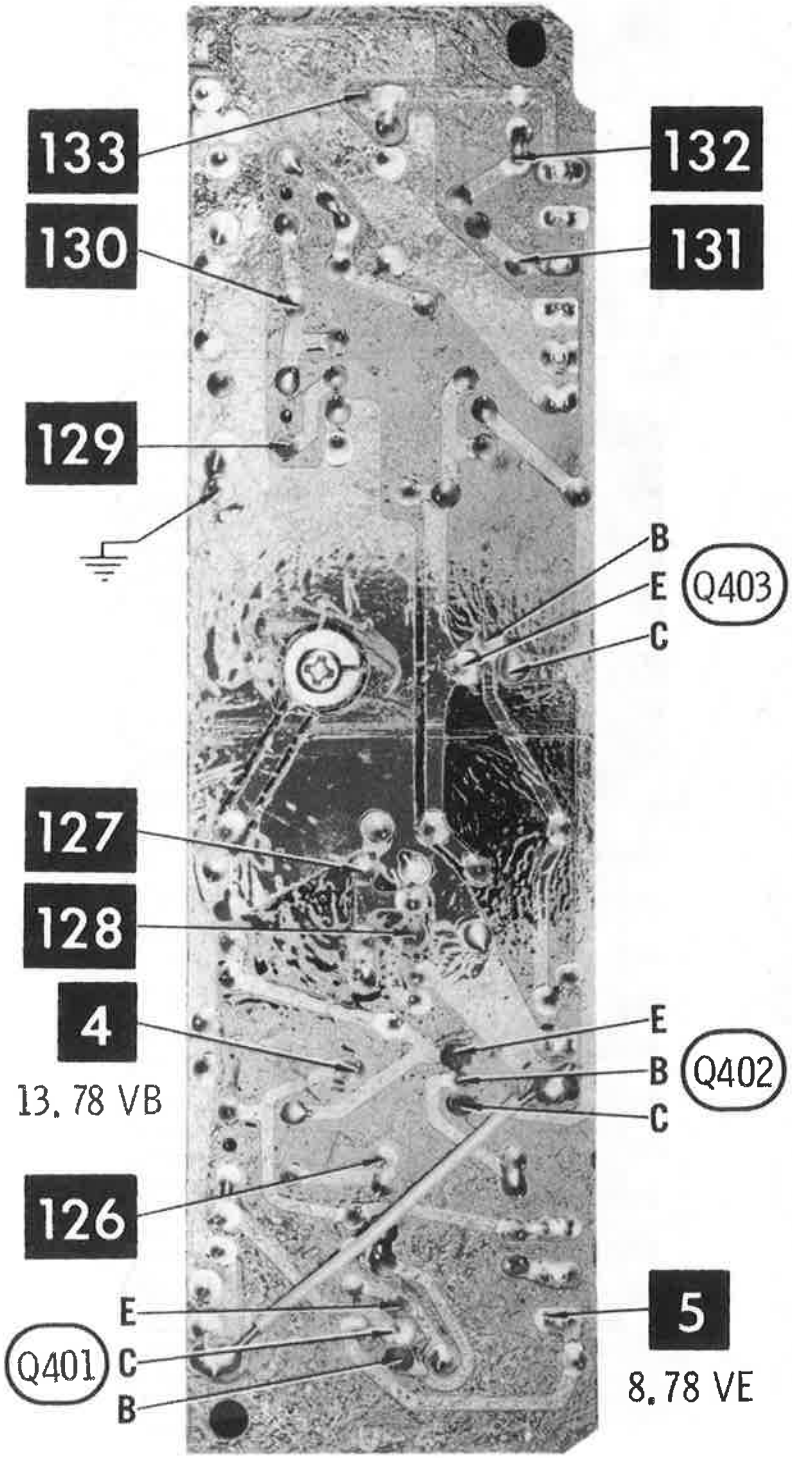

U-4 BOARD

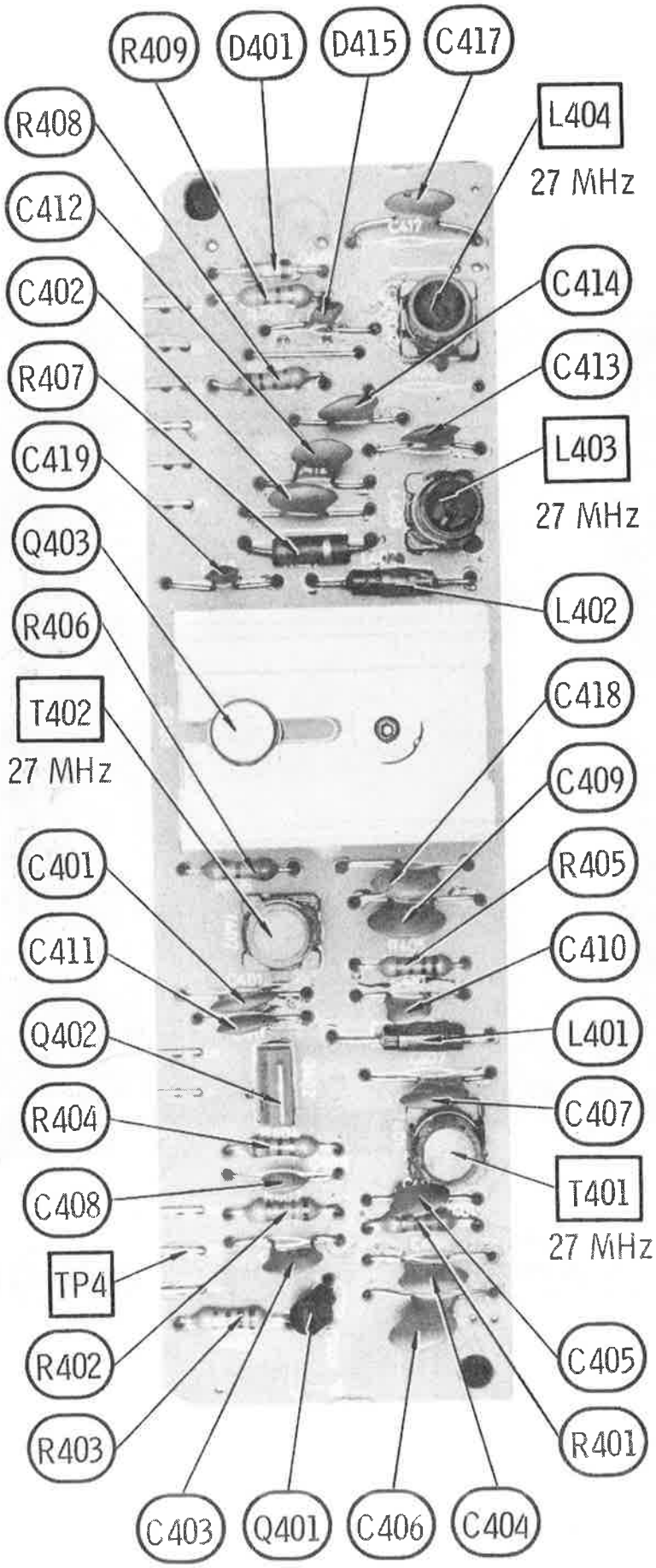
R409
D401
D415
C417
R408
L404
27 MHz
C412
C414
C402
C413
R407
L403
C419
27 MHz
Q403
L402
R406
C418
T402
27 MHz
C409
C401
R405
C411
C410
Q402
L401
R404
C407
C408
T401
27 MHz
TP4
C405
R402
R401
R403
C403
Q401
C406
C404

U-4 BOARD

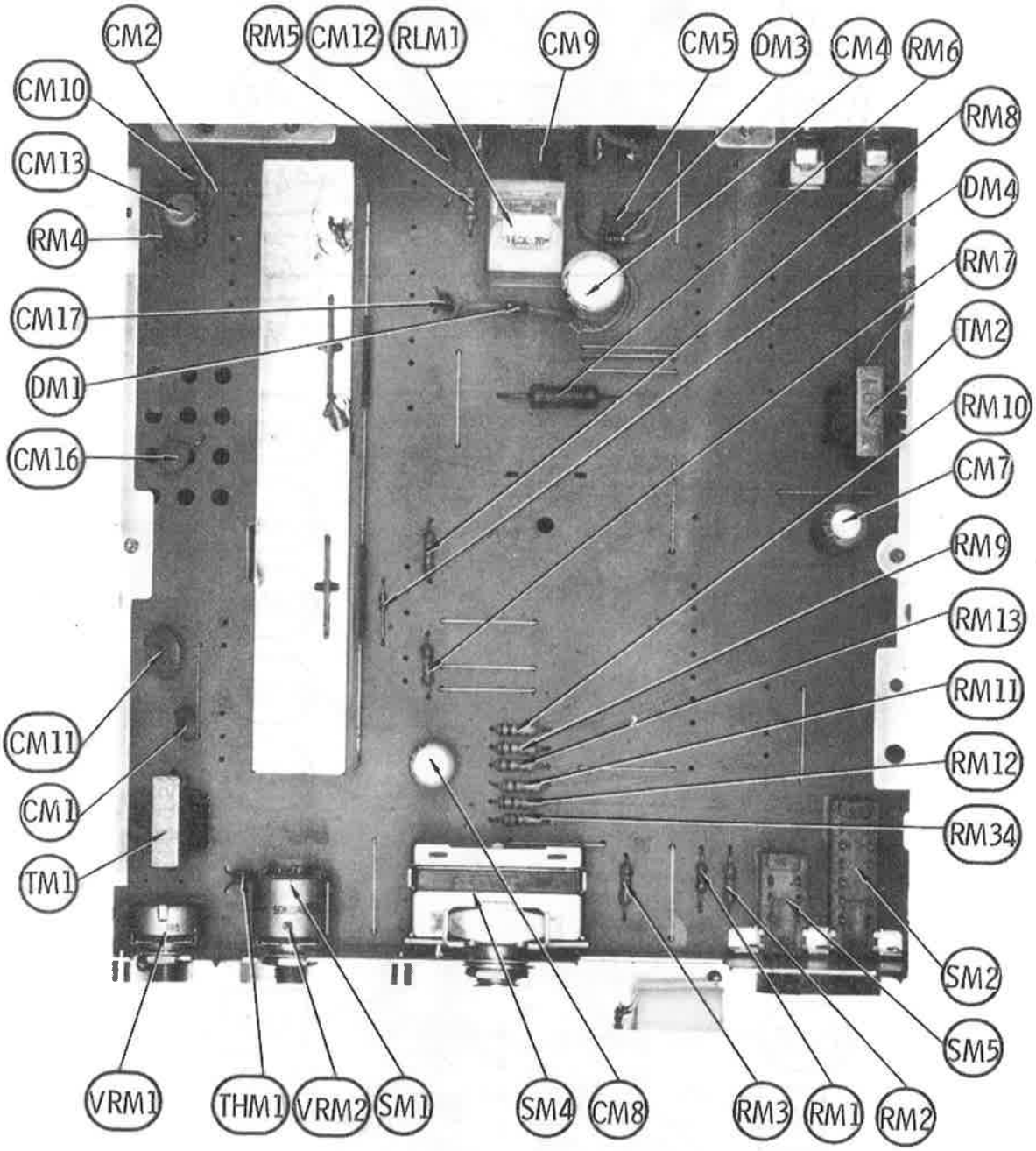

MOTHER BOARD

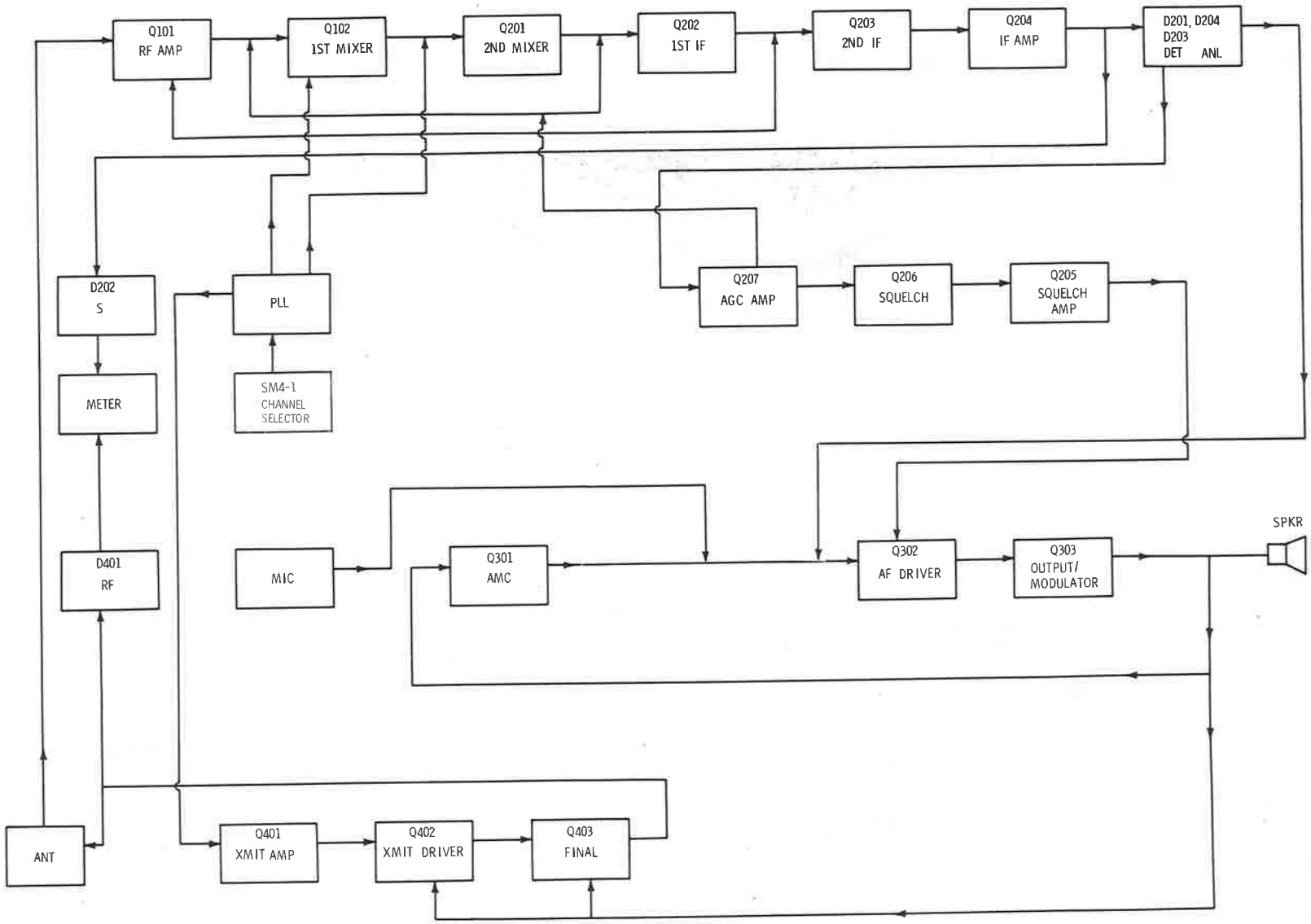

BLOCK DIAGRAM

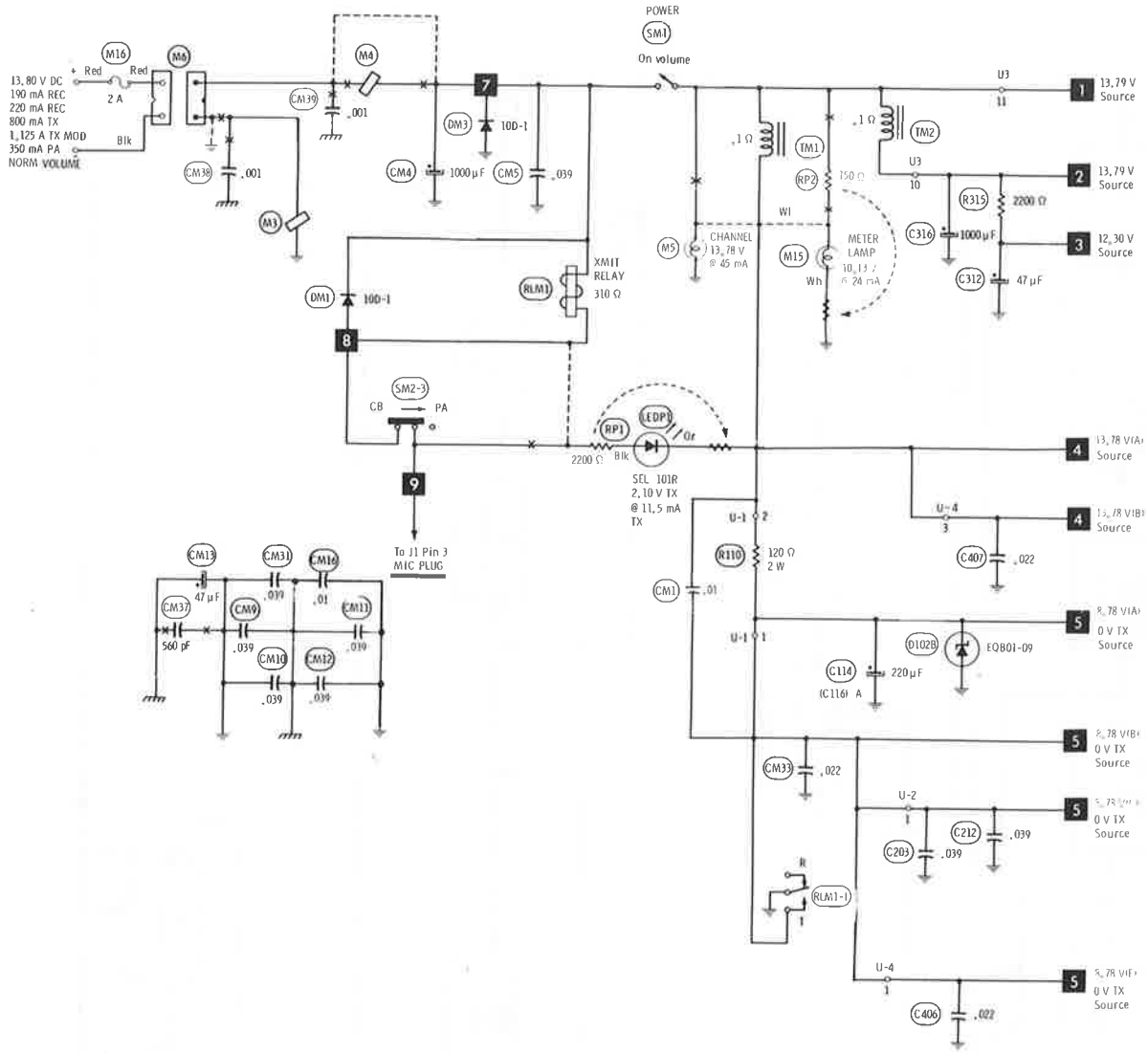

Terminal Guides

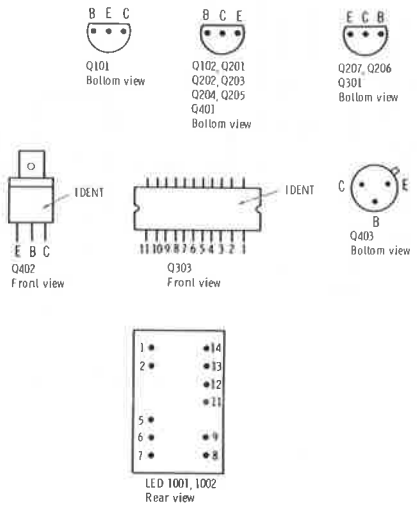

- Circuitry not used in some versions
- Circuitry used in some versions
- See parts list
- Nominal value
- Ground
- Chassis
- Common tie point

Measurements made in Channel 1 with switching as shown unless noted.
Item numbers in rectangles appear in the alignment/adjustment instructions.
Supply voltage maintained as shown at input.
Voltages measured with digital meter, no signal.
Controls adjusted for normal operation.
Arrow at control indicates direction of advance.
Terminal identification may not be found on unit.
Resistors are 1/2W or less, 5% unless noted.
Value in ( ) used in some versions.

A PHOTOFACT STANDARD NOTATION SCHEMATIC
WITH CIRCUITRACE®

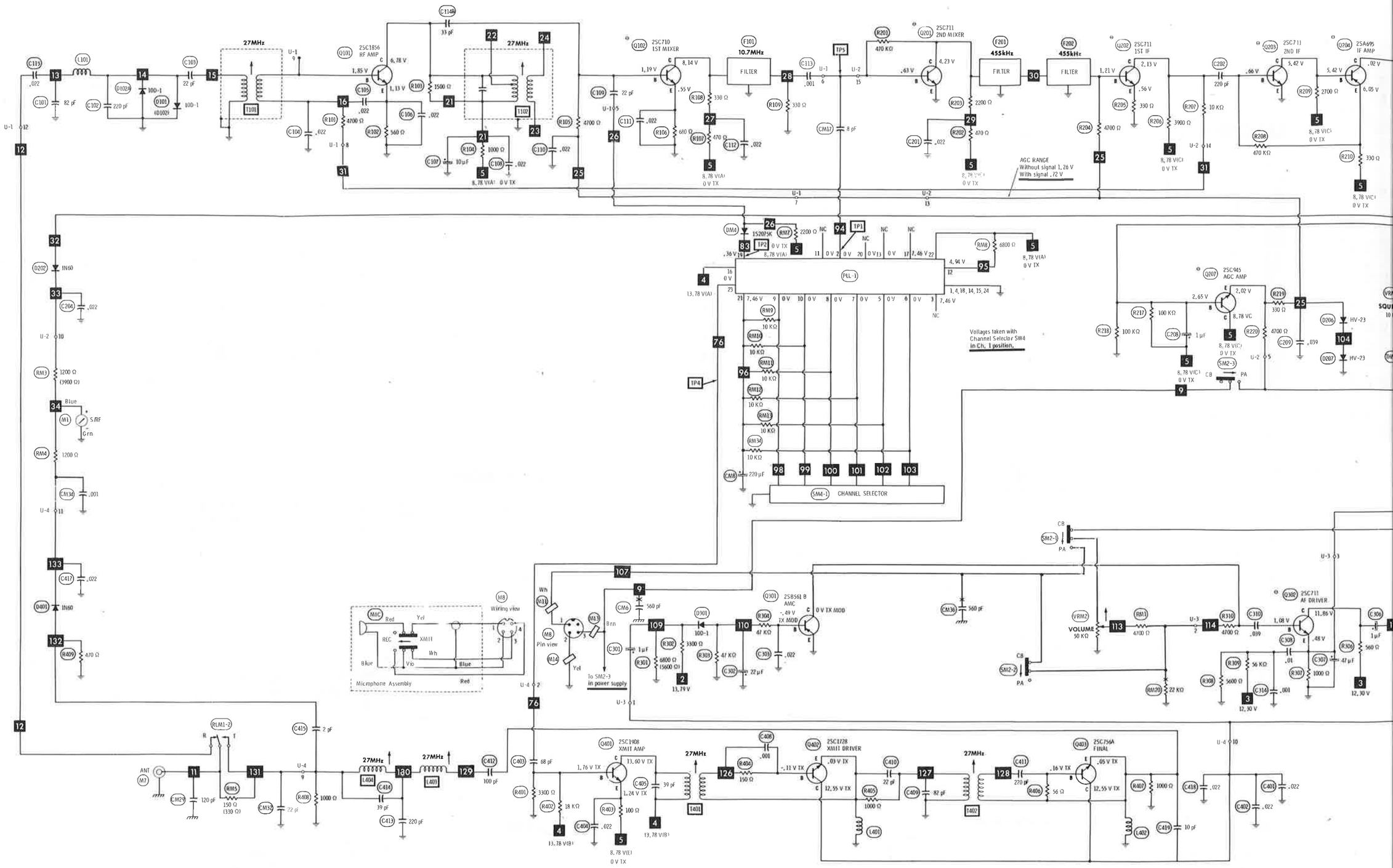
Q101 2SC1856 RF AMP
27MHz
T101
T102
C114B 33 pF
Q102 2SC710 1ST MIXER
F101 10.7MHz FILTER
TP5
R201 470 KΩ
Q201 2SC711 2ND MIXER
F201 455kHz FILTER
F202 455kHz FILTER
Q202 2SC711 1ST IF
Q203 2SC711 2ND IF
Q204 2SA695 IF AMP
AGC RANGE
Without signal 1.26 V
With signal .72 V
PLL-1
TP1
TP2
TP4
DM4 1S2075K
Voltages taken with Channel Selector SW4 in Ch. 1 position.
SM4-1 CHANNEL SELECTOR
Q207 2SC945 AGC AMP
D206 HV-23
D207 HV-23
D202 1N60
M1 S/RF
Blue
Grn
D401 1N60
Microphone Assembly
MIC
REC
XMIT
Red
Yel
Wh
Vio
Blue
M8 Wiring view
M8 Pin view
Brn
To SM2-3 in power supply
Q301 2SB561 B AMC
0 V TX MOD
D301 10D-1
VRM2 VOLUME 50 KΩ
SM2-1
SM2-2
CB
PA
Q302 2SC711 AF DRIVER
RLM1-2
ANT M7
L404
L403
Q401 2SC1908 XMIT AMP
T401
Q402 2SC1728 XMIT DRIVER
T402
Q403 2SC756A FINAL
L401
L402
8.78 V(A) 0 V TX
13.78 V(A)
13.78 V(B)
12.30 V
13.79 V

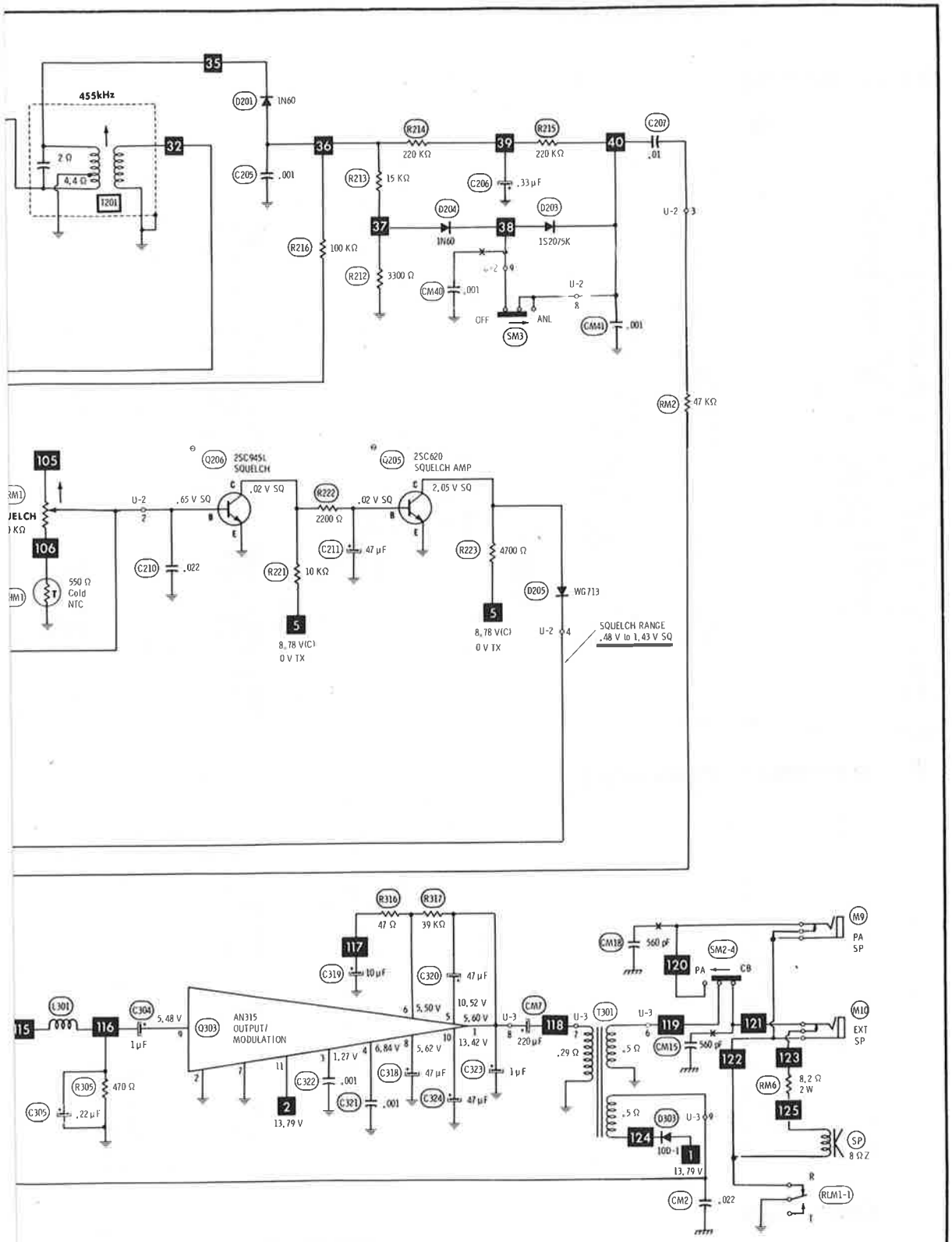
455kHz
2 Ω
4.4 Ω
T201
D201 1N60
C205 .001
R214 220 KΩ
R215 220 KΩ
C207 .01
R213 15 KΩ
C206 .33 μF
D204 1N60
D203 1S2075K
R216 100 KΩ
R212 3300 Ω
CM40 .001
OFF
ANL
SM3
CM41 .001
U-2
RM2 47 KΩ
Q206 2SC945L SQUELCH
Q205 2SC620 SQUELCH AMP
.02 V SQ
.65 V SQ
R222 2200 Ω
.02 V SQ
2.05 V SQ
C210 .022
R221 10 KΩ
C211 47 μF
R223 4700 Ω
D205 WG713
550 Ω Cold NTC
8.78 V(C)
0 V TX
8.78 V(C)
0 V TX
SQUELCH RANGE .48 V to 1.43 V SQ
R316 47 Ω
R317 39 KΩ
C319 10 μF
C320 47 μF
AN315 OUTPUT/ MODULATION
5.48 V
1 μF
L301
C304
Q303
R305 470 Ω
C305 .22 μF
5.50 V
10.52 V
5.60 V
13.42 V
1.27 V
6.84 V
5.62 V
C322 .001
C321 .001
C318 47 μF
C323 1 μF
C324 47 μF
13.79 V
CM7 220 μF
.29 Ω
T301
.5 Ω
CM18 560 pF
CM15 560 pF
SM2-4
PA
CB
M9 PA SP
M10 EXT SP
RM6 8.2 Ω 2 W
D303 10D-1
13.79 V
SP 8 Ω Z
CM2 .022
RLM1-1

PARTS LIST AND DESCRIPTION

(When ordering parts, state Model, Part Number, and Description.)

SEMICONDUCTORS (Select replacement transistor for best results)

ITEM No.	TYPE No.	MFGR. PART No.	REPLACEMENT DATA									
			GENERAL ELECTRIC PART No.	MALLORY PART No.	MOTOROLA PART No.	RAYTHEON PART No.	RCA PART No.	SPRAGUE PART No.	SYLVANIA PART No.	THORDARSON PART No.	WORKMAN PART No.	ZENITH PART No.
D101	10D-1		GE-504A	PTC201	HEPR0052	RE 49	SK3030	RT-213	ECG116	1N4004	WEP156	212-61
D102a	10D-1		GE-504A	PTC201	HEPR0052	RE 49	SK3030	RT-213	ECG116	1N4004	WEP156	212-61
D102b	EQB01-09		GEZD-5.1		HEPZ0406		SK3056	RT-235		1N4733A	WEP1103	
D201	1N60		1N60	PTC206	HEPR9135	RE 47	SK3088	RT-263	ECG109	1N60	WEP134	ZEN-430
D202	1N60		1N60	PTC206	HEPR9135	RE 47	SK3088	RT-263	ECG109	1N60	WEP134	ZEN-430
D203	1S2075K		GE-300	PTC214	HEPR0602	RE 52	SK3100	RT-218	ECG177		WEP1062	
D204	1N60		1N60	PTC206	HEPR9135	RE 47	SK3088	RT-263	ECG109	1N60	WEP134	ZEN-430
D205	WG713		GE-300	PTC214	HEPR0602	RE 52	SK3100	RT-218	ECG177		WEP1062	
D206	HV-23			PTC301		RE 250			ECG601			
D207	HV-23			PTC301		RE 250			ECG601			
D301	10D-1		GE-300	PTC214	HEPR0602	RE 52	SK3100	RT-218	ECG177		WEP1062	
D303	10D-1		GE-300	PTC214	HEPR0602	RE 52	SK3100	RT-218	ECG177		WEP1062	
D401	1N60		1N60	PTC206	HEPR9135	RE 47	SK3088	RT-263	ECG109	1N60	WEP134	ZEN-430
DM1	10D-1		GE-300	PTC214	HEPR0602	RE 52	SK3100	RT-218	ECG177		WEP1062	
DM3	10D-1		GE-300	PTC214	HEPR0602	RE 52	SK3100	RT-218	ECG177		WEP1062	
DM4	1S2075K		GE-300	PTC214	HEPR0602	RE 52	SK3100	RT-218	ECG177		WEP1062	
Q101	2SC1856		GE-81	PTC121	HEPS0010	RE 10	SK3018	RT-107A	ECG108		WEP56	ZEN-104
Q102	2SC710		GE-211*	PTC132	2SC710	RE 13*	SK3018*	RT-308*	ECG123A*	2SC710	WEP710	ZEN-114
	2SC710C		GE-211*	PTC132	2SC710	RE 13*	SK3018*	RT-308*	ECG123A*	2SC710	WEP710	ZEN-114
Q201	2SC711		GE-211*	PTC132	2SC710	RE 13*	SK3018*	RT-308*	ECG123A*	2SC710	WEP710	ZEN-114
	2SC711E		GE-211*	PTC132	2SC710	RE 13*	SK3018*	RT-308*	ECG123A*	2SC710	WEP710	ZEN-114
Q202	2SC711		GE-211*	PTC132	2SC710	RE 13*	SK3018*	RT-308*	ECG123A*	2SC710	WEP710	ZEN-114
	2SC711E		GE-211*	PTC132	2SC710	RE 13*	SK3018*	RT-308*	ECG123A*	2SC710	WEP710	ZEN-114
Q203	2SC711		GE-211*	PTC132	2SC710	RE 13*	SK3018*	RT-308*	ECG123A*	2SC710	WEP710	ZEN-114
	2SC711D		GE-211*	PTC132	2SC710	RE 13*	SK3018*	RT-308*	ECG123A*	2SC710	WEP710	ZEN-114
	2SC710D		GE-62*	PTC121	2SC711	RE 192*	SK3124*	RT-302*	ECG199*	2SC711	WEP66*	ZEN-116
Q204	2SA695		GE-48	PTC144*	HEPS3012*	RE 18*	SK3025*	RT-115*	ECG129*		WEP60*	
	2SA695D		GE-48	PTC144*	HEPS3012*	RE 18*	SK3025*	RT-115*	ECG129*		WEP60*	
Q205	2SC620		GE-20*	PTC125*	2SC620	RE 13*	SK3020*	RT-107A*	ECG123A*	2SC620	WEP736*	ZEN-127
	2SC620D		GE-20*	PTC125*	2SC620	RE 13*	SK3020*	RT-107A*	ECG123A*	2SC620	WEP736*	ZEN-127
Q206	2SC945L		GE-212	PTC121*	2SC945	RE 192	SK3124	RT-107A	ECG199	2SC945	WEP1945	121-Z9000
	2SC945Q		GE-212	PTC121*	2SC945	RE 192	SK3124	RT-107A	ECG199	2SC945	WEP1945	121-Z9000
Q207	2SC945		GE-212	PTC121*	2SC945	RE 192	SK3124	RT-107A	ECG199	2SC945	WEP1945	121-Z9000
	2SC945Q		GE-212	PTC121*	2SC945	RE 192	SK3124	RT-107A	ECG199	2SC945	WEP1945	121-Z9000
Q301	2SB561B		GE-82		HEPS0019	RE 26	SK3114	RT-126A	ECG159		WEP740	
Q302	2SC711		GE-62*	PTC121	2SC711	RE 192*	SK3124*	RT-302*	ECG199*	2SC711	WEP66*	ZEN-116
	2SC711E		GE-62*	PTC121	2SC711	RE 192*	SK3124*	RT-302*	ECG199*	2SC711	WEP66*	ZEN-116
Q303	AN315								ECG1240			
Q401	2SC1908E		GE-20*	PTC136*	HEPS0015*	RE 9*	SK3124*	RT-107A*	ECG107*	2SC380*	WEP535*	
Q402	2SC1728		GE-275			RE 204		RT-310	ECG302		WEP918	
Q403	2SC756A	(12)	GE-46	PTC158		RE 206		RT-306F	ECG282		WEP909	

* Lead configuration may vary from original.
(12) 10 WATTS @ 4 AMPS.

ELECTROLYTIC CAPACITORS

ITEM No.	RATING	REPLACEMENT DATA				
		MFGR. PART No.	CORNELL-DUBILIER PART No.	MALLORY PART No.	SPRAGUE PART No. Q-LINE	SPRAGUE PART No. GENERAL LINE
C107	10 16V		WBR10-25	TT15X10	QE1-177	TVA-1145
C114A	220 16V		WBR250-16	TT15X260A	QE1-495	TVA-1161
C206	.33 50V			TDC334M050EL	QDT1-14	SD50-R339
C208	1 50V		WBR1-50	TT50X1	QE1-11	TVA-1300
C211	47 10V		WBR50-25	TT10X50A	QE1-351	TVA-1150
C301	1 50V		WBR1-50	TT50X1	QE1-11	TVA-1300
C302	22 10V		WBR25-25	TT10X25	QE1-291	TVA-1148
C304	1 50V		WBR1-50	TT50X1	QE1-11	TVA-1300
C305	.22 25V			TDC224M050EL	QDT1-10	SD50-R229
C306	1 50V		WBR1-50	TT50X1	QE1-11	TVA-1300
C307	47 10V		WBR50-25	TT10X50A	QE1-351	TVA-1150
C312	47 10V		WBR50-25	TT10X50A	QE1-351	TVA-1150
C316	1000 16V		WBR1000-16	TT15X1000B	QE1-591	TVA-1163
C318	47 10V		WBR50-25	TT10X50A	QE1-351	TVA-1150
C319	10 16V		WBR10-25	TT15X10	QE1-177	TVA-1145
C320	47 10V		WBR50-25	TT10X50A	QE1-351	TVA-1150
C323	1 25V		WBR1-50	TT25X1	QE1-11	TVA-1300
C324	47 10V		WBR50-25	TT10X50A	QE1-351	TVA-1150
CM4	1000 16V		PC1000-16	VTT1000L16	QV1-183	EV-1260
CM7	220 16V		PC250-25	VTT220H16	QV1-117	EV-1240
CM8	220 16V		PC250-25	VTT220H16	QV1-117	EV-1240
CM13	47 16V		PC50-16	VTT47D16	QV1-73	EV-1226

CAPACITORS

ITEM No.	RATING	MFGR. PART No.	REPLACEMENT DATA				
			CENTRALAB PART No.	CORNELL-DUBILIER PART No.	MALLORY PART No.	SPRAGUE PART No. Q-LINE	SPRAGUE PART No. GENERAL LINE
C101	82 N750				CN7482		10TCU-Q82
C102	220 N750		DTN-220	N220	CN7322		10TCU-T22
C103	22 N220				*		10TCR-Q22
C104	.022		DC-253	MGP025	TA125		TG-S25
C105	.022		DC-253	MGP025	TA125		TG-S25
C106	.022		DC-253	MGP025	TA125		TG-S25
C108	.022		DC-253	MGP025	TA125		TG-S25
C109	22 N220				*		10TCR-Q22
C110	.022		DC-253	MGP025	TA125		TG-S25
C111	.022		DC-253	MGP025	TA125		TG-S25
C112	.022		DC-253	MGP025	TA125		TG-S25
C113	.001		DD-102G	GP1000	GP210	QC2-81	5GA-D10

PARTS LIST AND DESCRIPTION (CONTINUED)

(When ordering parts, state Model, Part Number, and Description.)

CAPACITORS (cont)

ITEM No.	RATING	MFGR. PART No.	REPLACEMENT DATA				
			CENTRALAB PART No.	CORNELL-DUBILIER PART No.	MALLORY PART No.	SPRAGUE PART No. Q-LINE	SPRAGUE PART No. GENERAL LINE
C114B	33 N220				*		10TCR-Q33
C115	.022		DC-253	MGP025	TA125		TG-S25
C201	.022		DC-253	MGP025	TA125		TG-S25
C202	220 N750		DTN-220	N220	CN7322		10TCU-T22
C203	.039		UK50-333		MAG50133		
C204	.022		DC-253	MGP025	TA125		TG-S25
C205	.001		DD-102G	GP1000	GP210	QC2-81	5GA-D10
C207	.01			WMF1S1	EWF1A110	QF1-91	1PB-S10
C209	.039		UK50-333		MAG50133		
C210	.022		DC-253	MGP025	TA125		TG-S25
C212	.039		UK50-333		MAG50133		
C303	.022		DC-253	MGP025	TA125		TG-S25
C308	.01			WMF1S1	EWF1A110	QF1-91	1PB-S10
C310	.039			DPMS6S39	PVC6139		6PS-S39
C314	.001		DD-102G	GP1000	GP210	QC2-81	5GA-D10
C321	.001		DD-102G	GP1000	GP210	QC2-81	5GA-D10
C322	.001		DD-102G	GP1000	GP210	QC2-81	5GA-D10
C401	.022		DC-253	MGP025	TA125		TG-S25
C402	.022		DC-253	MGP025	TA125		TG-S25
C403	68 N220				*		10TCR-Q68
C404	.022		DC-253	MGP025	TA125		TG-S25
C405	39 N220				*		10TCR-Q39
C406	.022		DC-253	MGP025	TA125		TG-S25
C407	.022		DC-253	MGP025	TA125		TG-S25
C408	.001		DD-102G	GP1000	GP210	QC2-81	5GA-D10
C409	82 N220				*		10TCR-Q82
C410	22 N220				*		10TCR-Q22
C411	220 N750		DTN-220	N220	CN7322		10TCU-T22
C412	100 N470				*		10TCT-T100
C413	220 N750		DTN-220	N220	CN7322		10TCU-T22
C414	39 N220				*		10TCR-Q39
C415	2 NPO		DTZ-2R2	NPO2P2	CN0522		10TCC-Y22
C416	120 N750		DTN-120				10TCU-T12
C417	.022		DC-253	MGP025	TA125		TG-S25
C418	.022		DC-253	MGP025	TA125		TG-S25
C419	10 NPO		DTZ-10	NP010	CN0410		10TCC-Q10
CM1	.01		DC-103	MGP01	TA110	QC2-141	TG-S10
CM2	.01		DC-103	MGP01	TA110	QC2-141	TG-S10
CM5	.039		UK50-333		MAG50133		
CM6	560		DD-561		GP356		10TS-T56
CM9	.039		UK50-333		MAG50133		
CM10	.039		UK50-333		MAG50133		
CM11	.039		UK50-333		MAG50133		
CM12	.039		UK50-333		MAG50133		
CM15	560		DD-561		GP356		10TS-T56
CM16	.01		DC-103	MGP01	TA110	QC2-141	TG-S10
CM17	8 NPO		DTZ-6R8	NP06P8	CN0568		10TCC-V68
CM18	560		DD-561		GP356		10TS-T56
CM29	120 NPO		DTZ-120		CN0312		10TCC-T12
CM31	.039		UK50-333		MAG50133		
CM32	32		DTZ-33	NP033	CN0433		10TCC-Q33
CM33	.022		DC-253	MGP025	TA125		TG-S25
CM34	.001		DD-102G	GP1000	GP210	QC2-81	5GA-D10
CM36	560		DD-561		GP356		10TS-T56
CM37	560		DD-561		GP356		10TS-T56
CM38	.001		DD-102G	GP1000	GP210	QC2-81	5GA-D10
CM39	.001		DD-102G	GP1000	GP210	QC2-81	5GA-D10
CM40	.001		DD-102G	GP1000	GP210	QC2-81	5GA-D10
CM41	.001		DD-102G	GP1000	GP210	QC2-81	5GA-D10

* Not normally in distributor's stock. Available thru distributor on order to manufacturer.

CONTROLS (All wattages 1/2 watt, or less, unless listed)

ITEM No.	FUNCTION	RESISTANCE	REPLACEMENT DATA				
			MFGR. PART No.	CENTRALAB PART No.	CLAROSTAT PART No.	MALLORY PART No.	TRW PART No.
VRM1	Squelch	10K					
VRM2	Volume/Switch	50K					

PARTS LIST AND DESCRIPTION (CONTINUED)

(When ordering parts, state Model, Part Number, and Description.)

RESISTORS (Power and Special)

ITEM No.	RATING	REPLACEMENT DATA	
		WORKMAN PART No.	MFGR. PART No.
THM1	550 Cold NTC		TD5-165

ITEM No.	RATING	REPLACEMENT DATA	
		WORKMAN PART No.	MFGR. PART No.

COILS (RF-IF)

ITEM No.	FUNCTION	REPLACEMENT DATA			REMARKS
		PART No.	OTHER IDENTIFICATION	MILLER PART No.	
L101	RF Choke				
L301	RF Choke				
L401	RF Choke				
L402	RF Choke				
L403	Final(27MHz)				
L404	Pi Filter(27MHz)				
T101	Rec Antenna(27MHz)		ETC15089	CBS774	
T102	Rec RF(27MHz)		ETC15061	CBS708-TC	
T201	IF(455kHz)		ETC15090	CBS506-4TC	
T401	Xmt Amp(27MHz)				
T402	Xmt Driver(27MHz)				

FILTER CHOKE

ITEM No.	RATINGS			REPLACEMENT DATA			NOTES
	CURRENT (Measured)	DC RES.	INDUCTANCE (0 CURRENT 1000~)	MFGR. PART No.	THORDARSON PART No.	TRIAD PART No.	
TM1	1.4A	.1	1.45mH	1002(1)	TR509		(1) Number on Unit
TM2	1.4A	.1	1.45mH	1002(1)	TR509		

TRANSFORMER (Audio Output)

ITEM No.	IMPEDANCE			REPLACEMENT DATA			NOTES
	PRI.	SEC.		MFGR. PART No.	THORDARSON PART No.	TRIAD PART No.	
T301	3.92	1 8	2 20.48	62017(1)	TR827		(1) Number on Unit

SPEAKER

ITEM No.	TYPE	REPLACEMENT DATA		NOTES
		MFGR. PART No.	QUAM PART No.	
SP	3" PM. 8 Ohms		30A05Z8R	

PARTS LIST AND DESCRIPTION (CONTINUED)

(When ordering parts, state Model, Part Number, and Description.)

FUSE DEVICES

ITEM No.	DESCRIPTION	REPLACEMENT DATA						
		PART No.		BUSS PART No.		LITTELFUSE PART No.		WORKMAN PART No.
		DEVICE	HOLDER	DEVICE	HOLDER	DEVICE	HOLDER	DEVICE
M16	2 Amps			AGC2	HDJ	312002	150145	FG2-2

MICROPHONE

ITEM No.	REPLACEMENT DATA				CONNECTION DATA						
	MFGR. PART No.	GC PART No.	GC NOISE CANCEL	GC POWER	GC CONNECTOR	GC Red	GC Shield	GC Yellow	GC Blue	GC White	GC Black
MIC		18-032	18-034	18-010	18-092	1	2	3	NC	NC	2

MISCELLANEOUS

ITEM No.	PART NAME	PART No.	NOTES
F101	Ceramic Filter		10.7MHz
F201	Ceramic Filter		455kHz
F202	Ceramic Filter		455kHz
LEDP1	LED		TX Indicator
M1	Meter		S/RF
M3	Ferrite Bead		
M4	Ferrite Bead		
M5	Lamp		Channel Indicator(45mA @ 13.78V)
M6	Jack		Power
M7	Jack		Antenna
M8	Jack		Microphone
M9	Jack		PA
M10	Jack		External Speaker
M11	Ferrite Bead		
M13	Ferrite Bead		
M14	Ferrite Bead		
M15	Lamp		Meter(29mA @ 10.13V)
PLM1	Relay		XT/REC
SM1	Switch		Power(Part of Volume Control)
SM2	Switch		CB/PA
SM3	Switch		ANL
SM4	Switch		Channel Selector

WIRING DATA

General-use Hook-up Wire (available in 5 colors) BELDEN No. 8523
Shielded Hook-up Wire (spiral wrapped) . . . . . BELDEN No. 8421
(braided) . . . . . BELDEN No. 8401
Speaker Cable (available in 4 colors) . . . . . BELDEN No. 8782
Bonding Strap . . . . . BELDEN No. 8672
AC Power Cord . . . . . (6') BELDEN No. 17106
(9') BELDEN No. 17109

Coiled Microphone Cable
3-conductor (1 shielded) 23AWG BELDEN No. 9471 (5')
BELDEN No. 8497 (6')
BELDEN No. 9472 (7-1/2')
28AWG BELDEN No. 9466 (6')
31AWG BELDEN No. 9468 (10')
4-conductor (unshielded) 23AWG BELDEN No. 8415 (6')
5-conductor (1 shielded) 28AWG BELDEN No. 9467 (6')
BELDEN No. 9465 (7-1/2')