NOTE

Repair or adjustment of transmitter circuits must be under supervision of a person with first-or second-class radiotelephone license.
(Refer to FCC Rules and Regulations Part 95, Subpart C & D.)

The frequency of the transmitter should be checked periodically with a secondary frequency standard to insure proper and legal operation.

Best results will be obtained when adjusting the final RF output circuit if the antenna normally used is connected and the chassis is as nearly in the cabinet as possible.

Connect either 50-ohm dummy load or the normally used antenna system.

MODEL 139XLR

HOWARD W. SAMS & CO., INC. Indianapolis, Indiana 46206

© 1977 Howard W. Sams & Co., Inc. Printed in U. S. of America 7CF537

ALIGNMENT INSTRUCTIONS

CAUTION: Use isolation transformer or observe polarity when connecting test equipment.
Maintain line voltage at 120V AC. Allow a 15-minute warm-up period.
Adjustments made with 13.8-volt DC input.
Connect low sides of test equipment to ground unless specified otherwise.
Connect 50-ohm dummy load or antenna before keying transmitter.

Suggested Alignment Tools:	GC ELECTRONICS
L27, L30, L32	5009
L1, L2, L3, L4, L5, L7, L8, L16, L17, L24, L37, L39	9440
CT1 thru CT7	5000

SYNTHESIZER ALIGNMENT

TEST EQUIPMENT	TRANSCEIVER	ADJUST	REMARKS
Input of RF VTVM to TP6.	Ch. 1 Clarifier-Midrange AM	L24	Adjust for maximum.
Input of DC meter to TP7.	Ch. 1	L17	Adjust for 2.0 volts.
Input of RF VTVM to TP8.	Ch. 19	L16	Adjust for maximum.
Input of frequency counter to TP8.	Ch. 19	CT6	Adjust for 34.9850MHz ±20Hz.
Input of frequency counter to TP8.	Ch. 19, USB	CT4	Adjust for 34.9875MHz ±20Hz.
Input of frequency counter to TP8.	Ch. 19, LSB	CT5	Adjust for 34.9825MHz ±20Hz.
Input of frequency counter to TP8.	Ch. 19, LSB, Xmit	VR9	Adjust for 34.9825MHz ±20Hz.
Input of frequency counter to TP9.	Ch. 19, USB, Xmit	CT2	Adjust for 7.8025MHz +5Hz -0Hz.
Input of frequency counter to TP9.	Ch. 19, LSB, Xmit	CT3	Adjust for 7.7975MHz +0Hz -5Hz.

RECEIVER ALIGNMENT

Connect an AC VTVM or AF wattmeter across speaker voice coil.
Adjust volume control to obtain a suitable indication.

SSB

TEST EQUIPMENT	TRANSCEIVER	ADJUST	REMARKS
Output of signal generator thru .01uF to antenna jack. 27.186MHz, no modulation. Output .25uV.	Ch. 19, USB RF Gain-Maximum Clarifier-Midrange Volume-Maximum	L8,L7,L5, L4,L3	Adjust for maximum output.
Output of signal generator thru .01uF to antenna jack. 27.186MHz, no modulation. Output .25uV.	Ch. 19	CT1	Adjust for .5 watts audio.

RECEIVER ALIGNMENT

Connect an AC VTVM or AF wattmeter across speaker voice coil.
Adjust volume control to obtain a suitable indication.

AM

TEST EQUIPMENT	TRANSCEIVER	ADJUST	REMARKS
Output of signal generator thru .01uF to antenna jack. 23.5MHz, no modulation. Output 200uV. Input of RF VTVM to TP5.	Ch. 19, AM RF Gain-Maximum NB-On	L1,L2	Adjust for maximum.

RECEIVER ADJUSTMENTS

Connect an AC VTVM or AF wattmeter across speaker voice coil.
Adjust volume control to obtain a suitable indication.

TEST EQUIPMENT	TRANSCEIVER	ADJUST	REMARKS
Output of signal generator thru .01uF to antenna jack. 27.186MHz, no modulation. Output 250uV.	Ch. 19, USB RF Gain-Maximum Volume-Maximum	VR2	SSB AGC Adjust VR2 for .5 volts audio.
Output of signal generator thru .01uF to antenna jack. 27.186MHz, no modulation. Output 100uV.	Ch. 19	VR1	S METER Adjust for 9 on S scale of meter.

RECEIVER ADJUSTMENTS (Continued)

TEST EQUIPMENT	TRANSCEIVER	ADJUST	REMARKS
Output of signal generator thru .01uF to antenna jack. 27.186MHz, no modulation. Output 500uV.	Ch. 19	VR3	SQUELCH RANGE Set squelch control VR404 fully clockwise. Adjust VR3 so that squelch just breaks.
Output of signal generator thru .01uF to antenna jack. 27.185MHz, 1000Hz @ 30% modulation. Output .5uV.	Ch. 19, AM	VR5	AM AGC Adjust VR5 for .5 watts audio.

TRANSMITTER ALIGNMENT

Connect an RF wattmeter and 50-ohm, 25-watt dummy load to antenna connector.
NOTE: Be sure to check transmit frequency and power on all active channels after alignment of transmitter.
See page 4 for channel frequencies.

SSB

TEST EQUIPMENT	TRANSCEIVER	ADJUST	REMARKS
Output of 2 tone generator to mike input. 500Hz and 2400Hz at .5 volts.	Ch. 19, USB Dynamike-Maximum	L39,L37, L32,L30	Adjust for maximum.
Output of 2 tone generator to mike input. 500Hz and 2400Hz at .5 volts.	Ch. 19, LSB	CT7	Adjust CT7 for 11.5 watts.

TRANSMITTER ALIGNMENT

Connect an RF wattmeter and 50-ohm, 25-watt dummy load to antenna connector.
NOTE: Be sure to check transmit frequency and power on all active channels after alignment of transmitter.
See page 4 for channel frequencies.

AM

TEST EQUIPMENT	TRANSCEIVER	ADJUST	REMARKS
Input of spectrum analyzer to antenna jack.	Ch. 19	L27	Adjust for MINIMUM at 54MHz.

TRANSMITTER ADJUSTMENTS

Connect an RF wattmeter and 50-ohm, 25-watt dummy load to antenna connector.
NOTE: Be sure to check transmit frequency and power on all active channels after adjustments of transmitter.
See page 4 for channel frequencies.

TEST EQUIPMENT	TRANSCEIVER	ADJUST	REMARKS
DC current meter to TP3 and TP4. No modulation.	Ch. 19, USB	VR15	BIAS Adjust VR15 for 40mA ±10mA.
DC current meter to TP1 and TP2. No modulation.	Ch. 19, USB	VR16	BIAS Adjust VR16 for 70mA ±10mA.
No modulation.	Ch. 19, USB	VR4	BALANCE Adjust for MINIMUM RF.
No modulation.	Ch. 19, AM	VR8	AM REG Adjust VR8 for 3.8 watts.
No modulation.	Ch. 19, AM	VR12	RF PANEL METER Adjust VR12 for 3.8 watts on RF scale of meter.
Inject a 1000Hz signal at mic input. Modulation meter to antenna jack.	Ch. 19, AM AMC-Maximum	VR7	AM AMC Adjust signal for 50% modulation. Increase signal 630 times. Adjust VR7 for 95% modulation.
Modulation meter to antenna jack. Inject a 1000Hz signal at mic input.	Ch. 13, AM	VR14	MOD Adjust VR14 so that MOD panel meter agrees with external modulation meter.

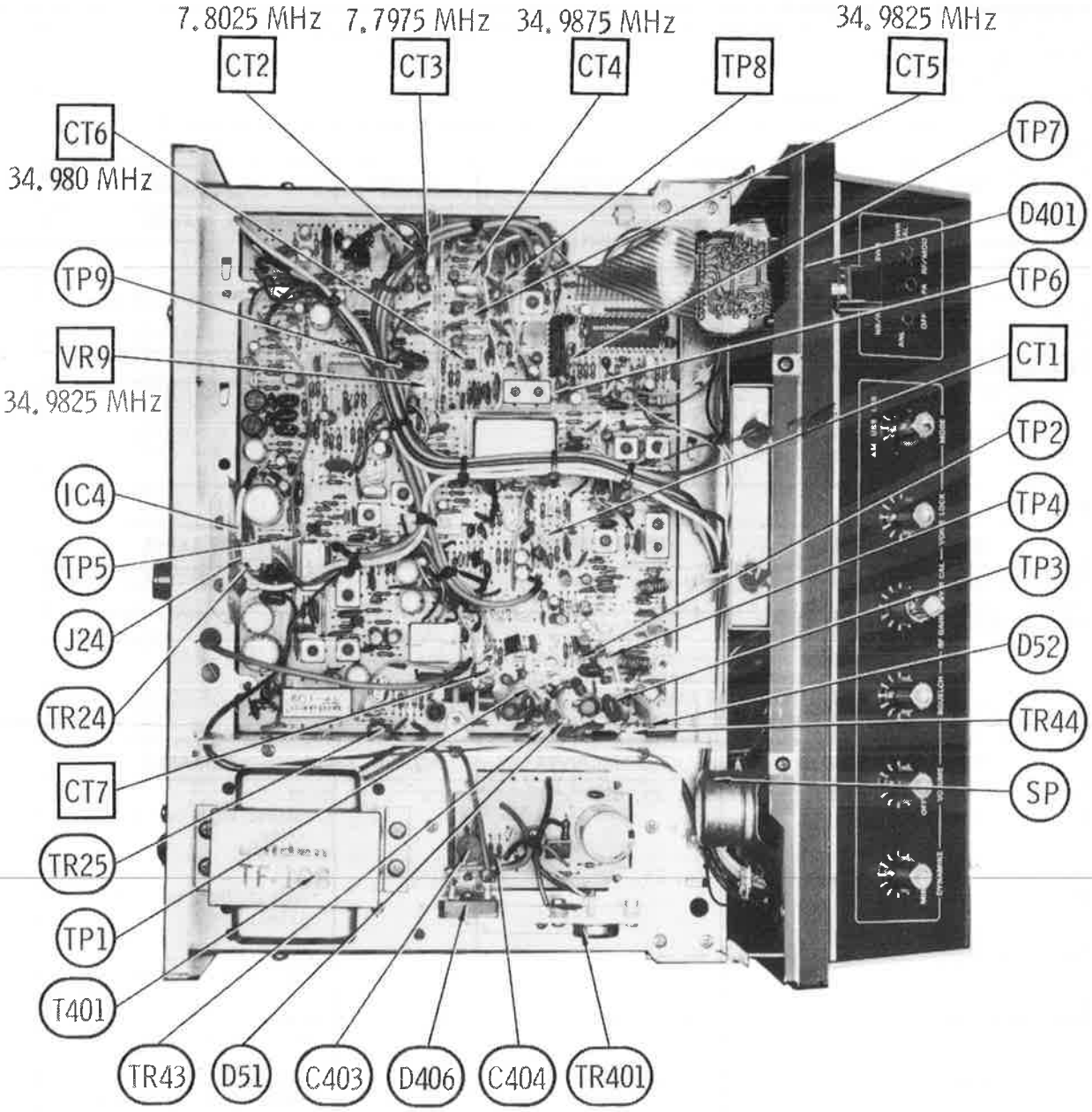

CHASSIS-TOP VIEW

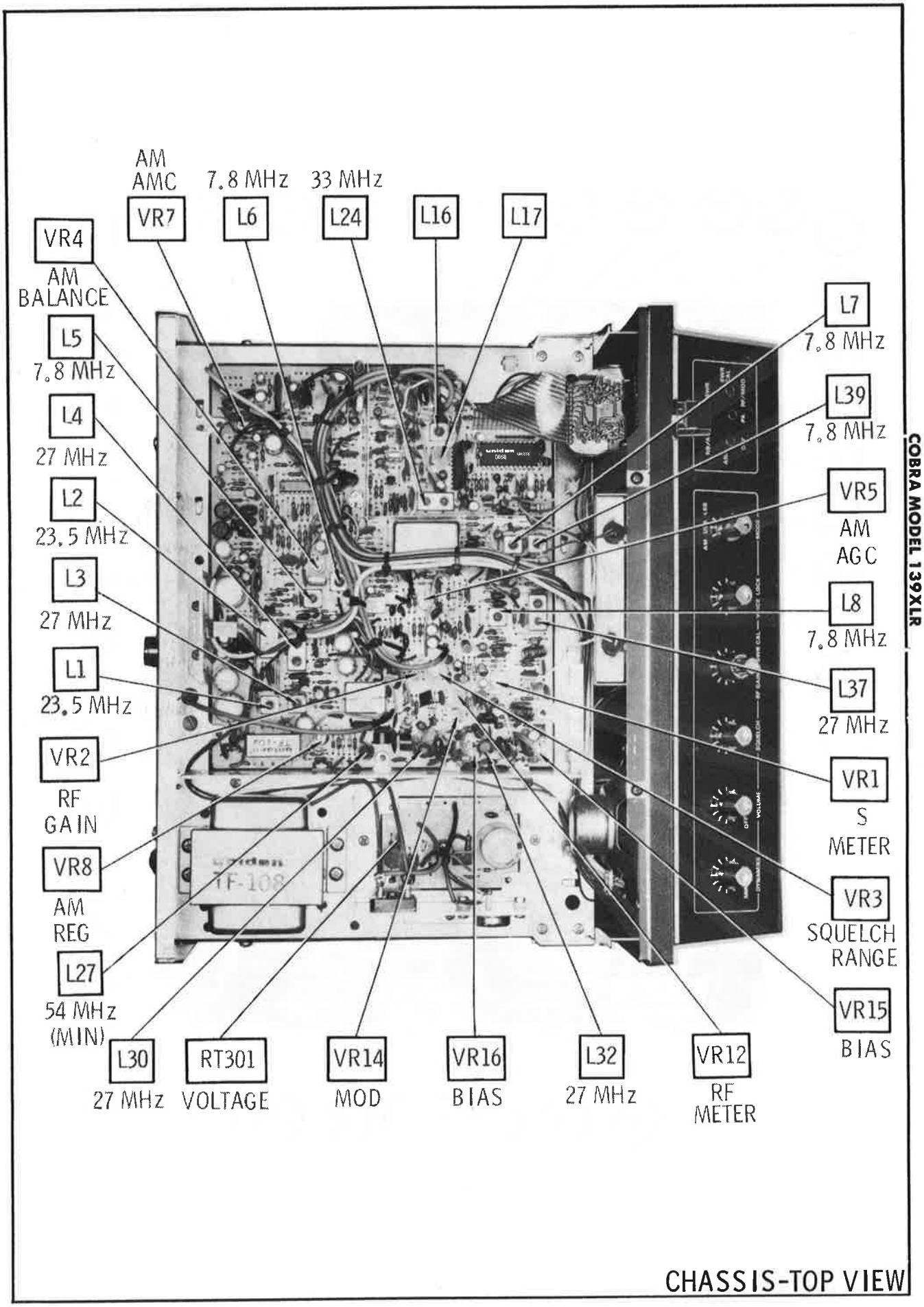

CHASSIS-TOP VIEW

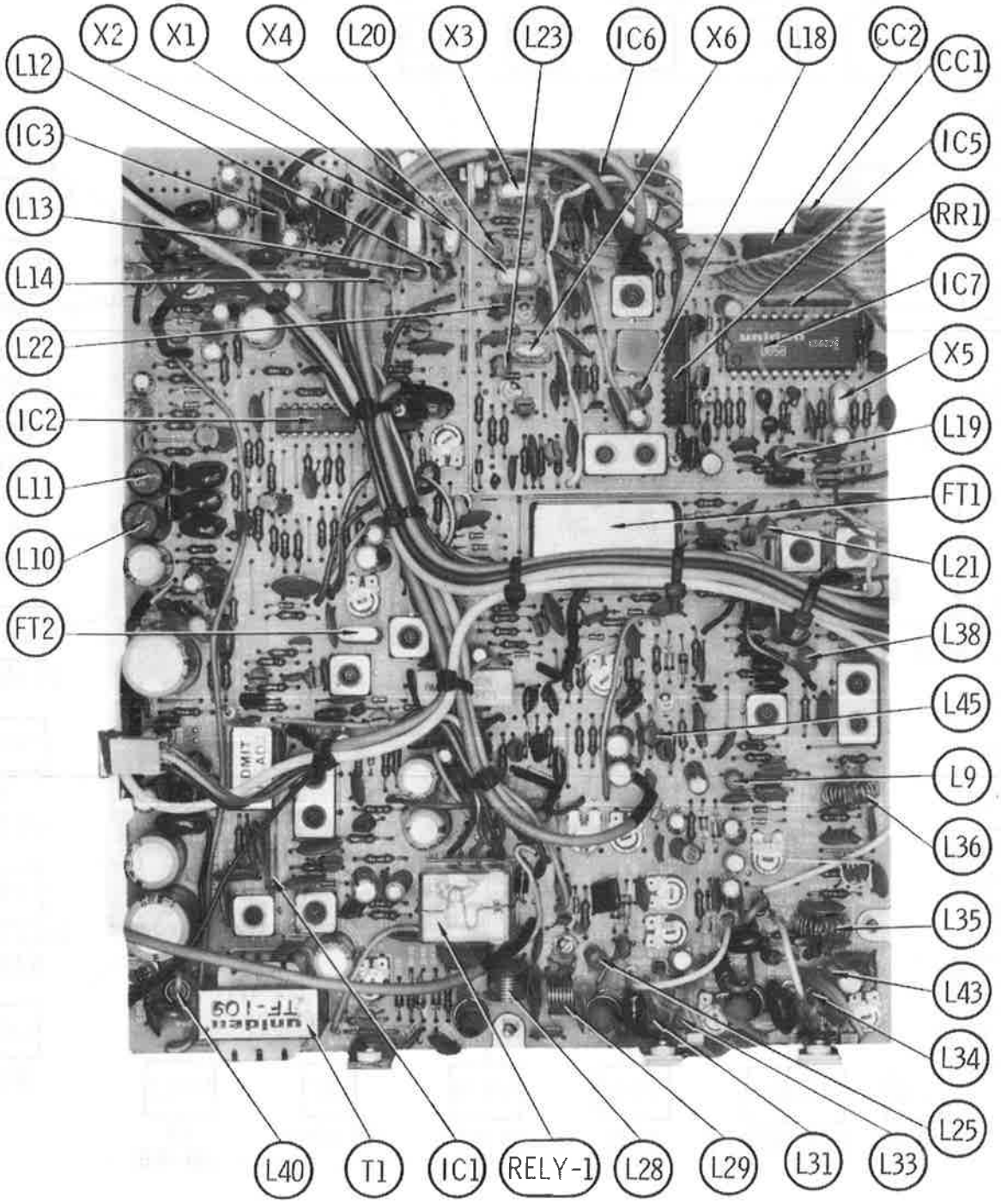
X2
X1
X4
L20
X3
L23
IC6
X6
L18
CC2
CC1
L12
IC3
L13
L14
L22
IC2
L11
L10
FT2
IC5
RR1
IC7
X5
L19
FT1
L21
L38
L45
L9
L36
L35
L43
L34
L25
L40
T1
IC1
RELY-1
L28
L29
L31
L33

MAIN BOARD

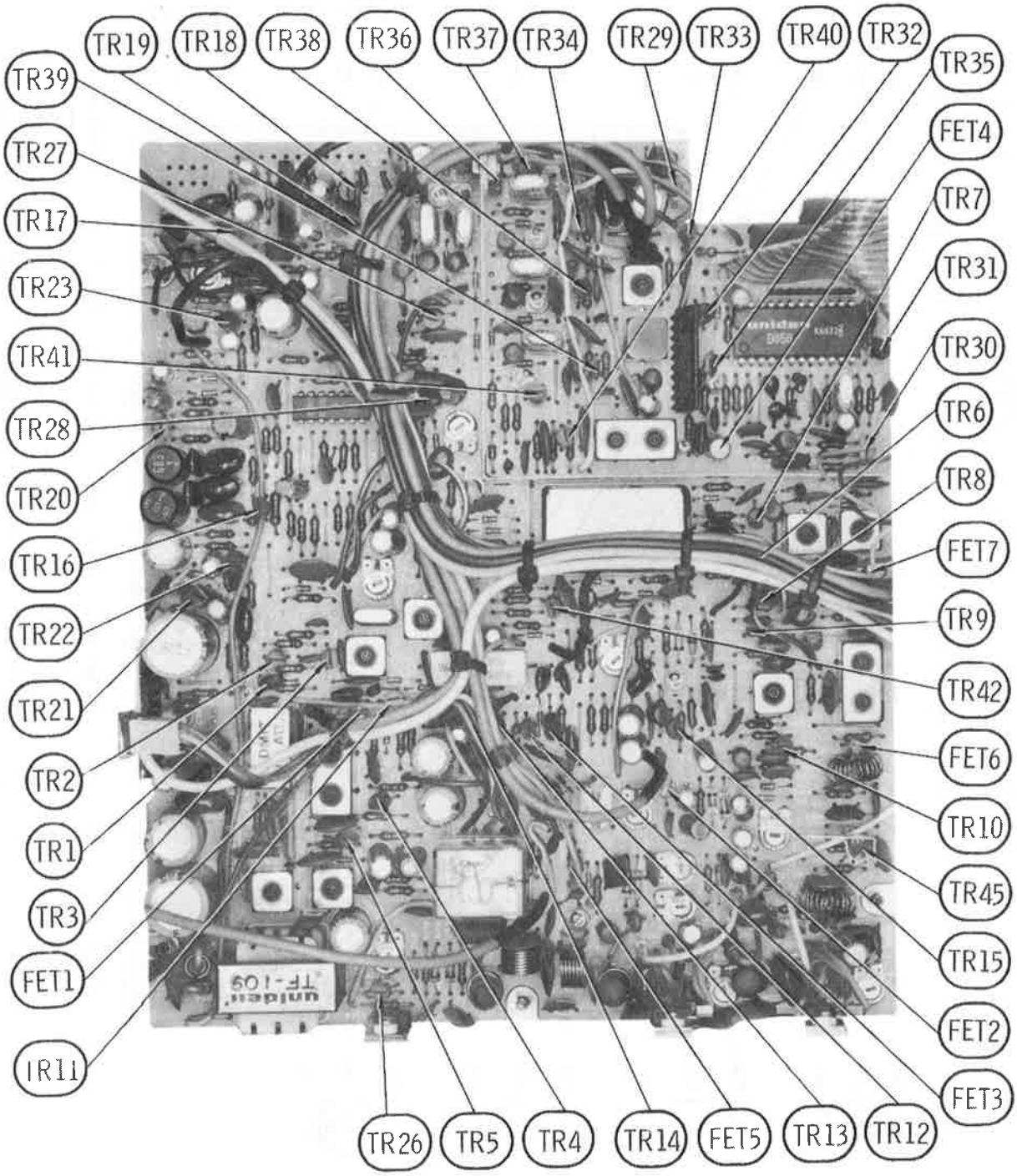
TR19
TR18
TR38
TR36
TR37
TR34
TR29
TR33
TR40
TR32
TR35
TR39
FET4
TR27
TR7
TR17
TR31
TR23
TR30
TR41
TR6
TR28
TR8
TR20
FET7
TR16
TR9
TR22
TR42
TR21
FET6
TR2
TR10
TR1
TR45
TR3
TR15
FET1
FET2
IR11
FET3
TR26
TR5
TR4
TR14
FET5
TR13
TR12

MAIN BOARD

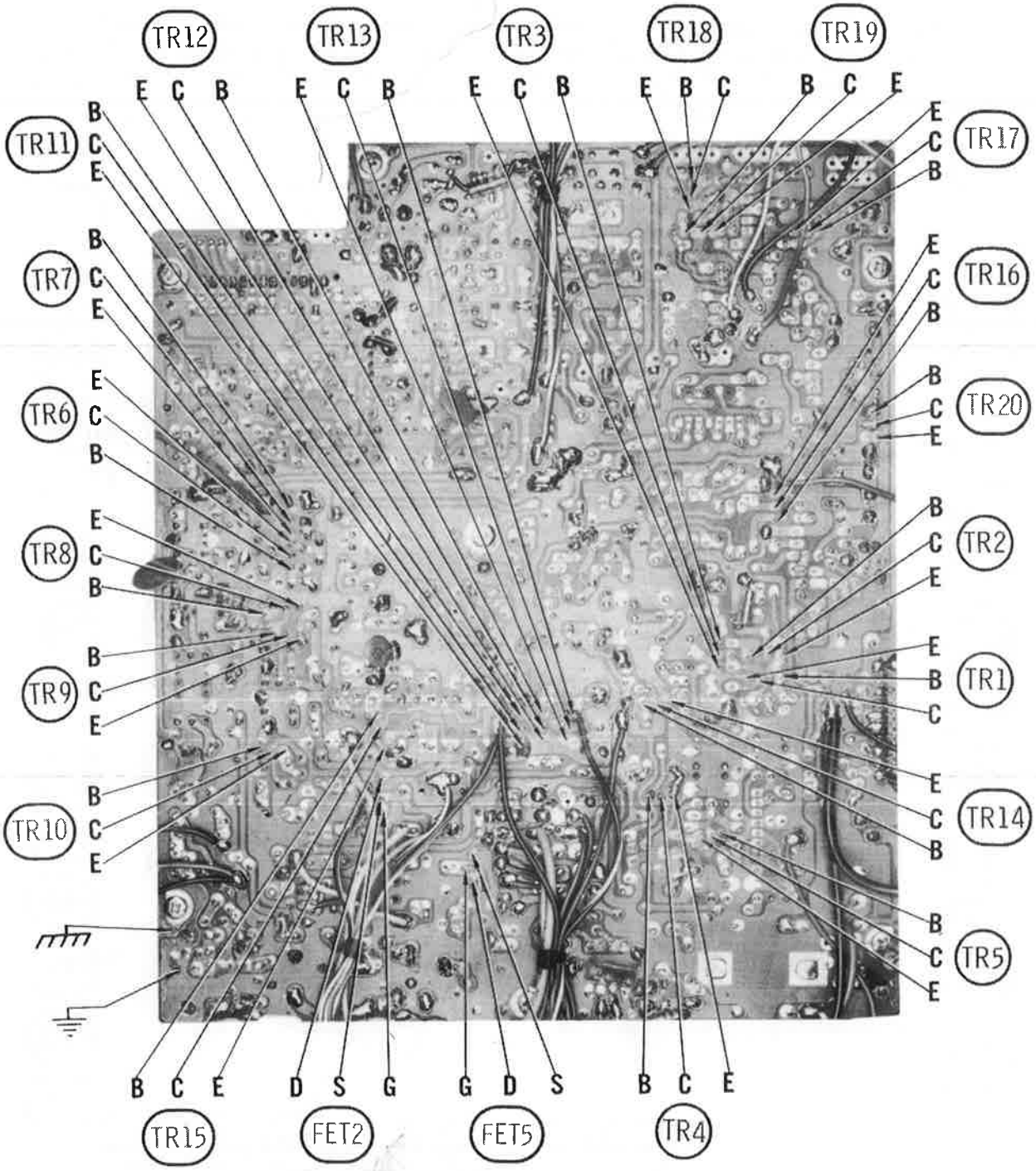
TR12
E C B
TR13
E C B
TR3
E C B
TR18
E B C
TR19
B C E
TR11
B C E
TR17
E C B
TR7
B C E
TR16
E C B
TR6
E C B
TR20
B C E
TR8
E C B
TR2
B C E
TR9
B C E
TR1
E B C
TR10
B C E
TR14
E C B
TR5
B C E
B C E
TR15
D S G
FET2
G D S
FET5
B C E
TR4

MAIN BOARD

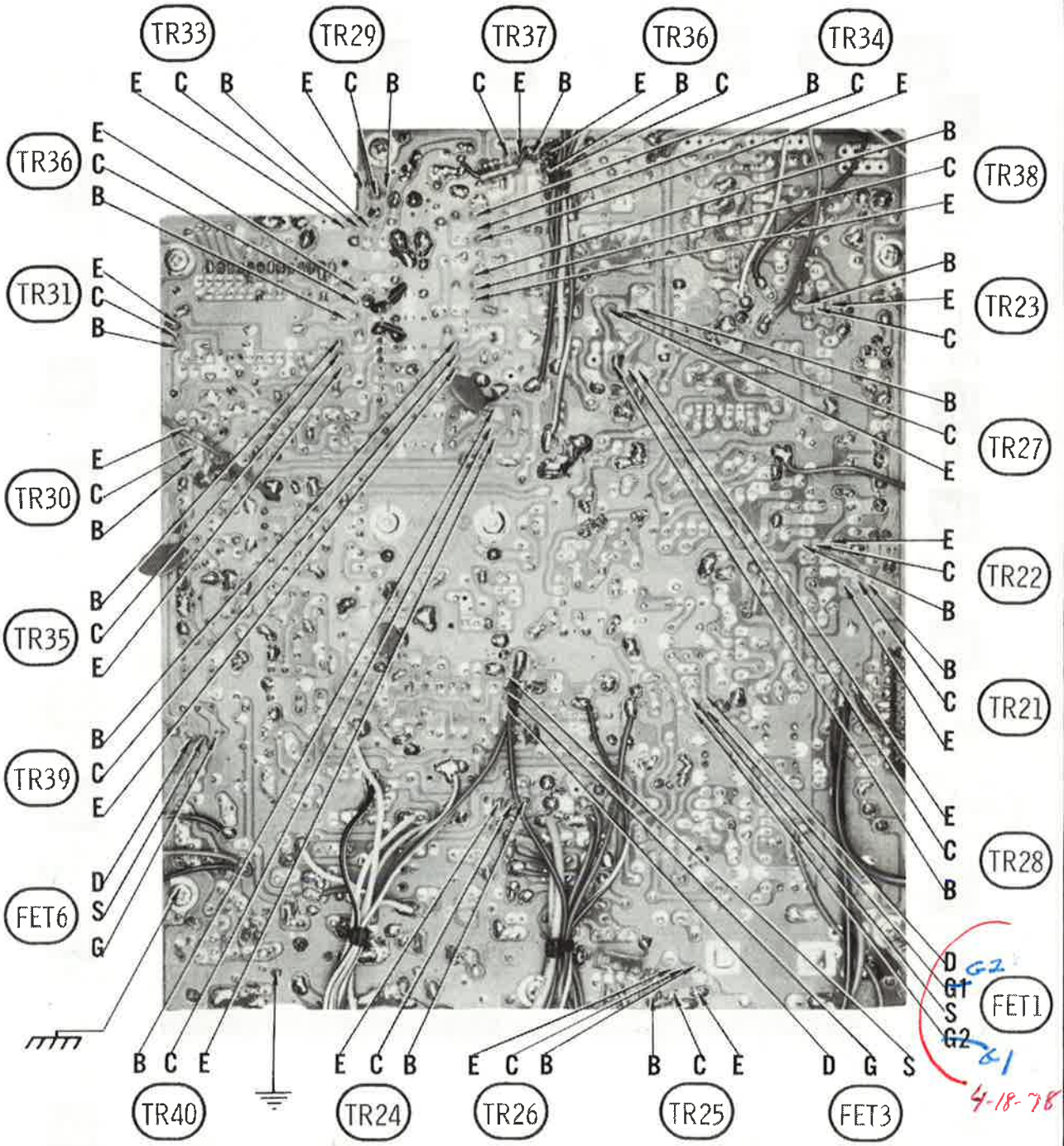
TR33
E C B
TR29
E C B
TR37
C E B
TR36
E B C
TR34
B C E
TR36
E C B
TR31
E C B
TR30
E C B
TR35
B C E
TR39
B C E
FET6
D S G
TR38
B C E
TR23
B E C
TR27
B C E
TR22
E C B
TR21
B C E
TR28
E C B
FET1
D G1 S G2
G2
G1
4-18-78
TR40
B C E
TR24
E C B
TR26
E C B
TR25
B C E
FET3
D G S

MAIN BOARD

A Howard W. Sams CIRCUITRACE® Photo

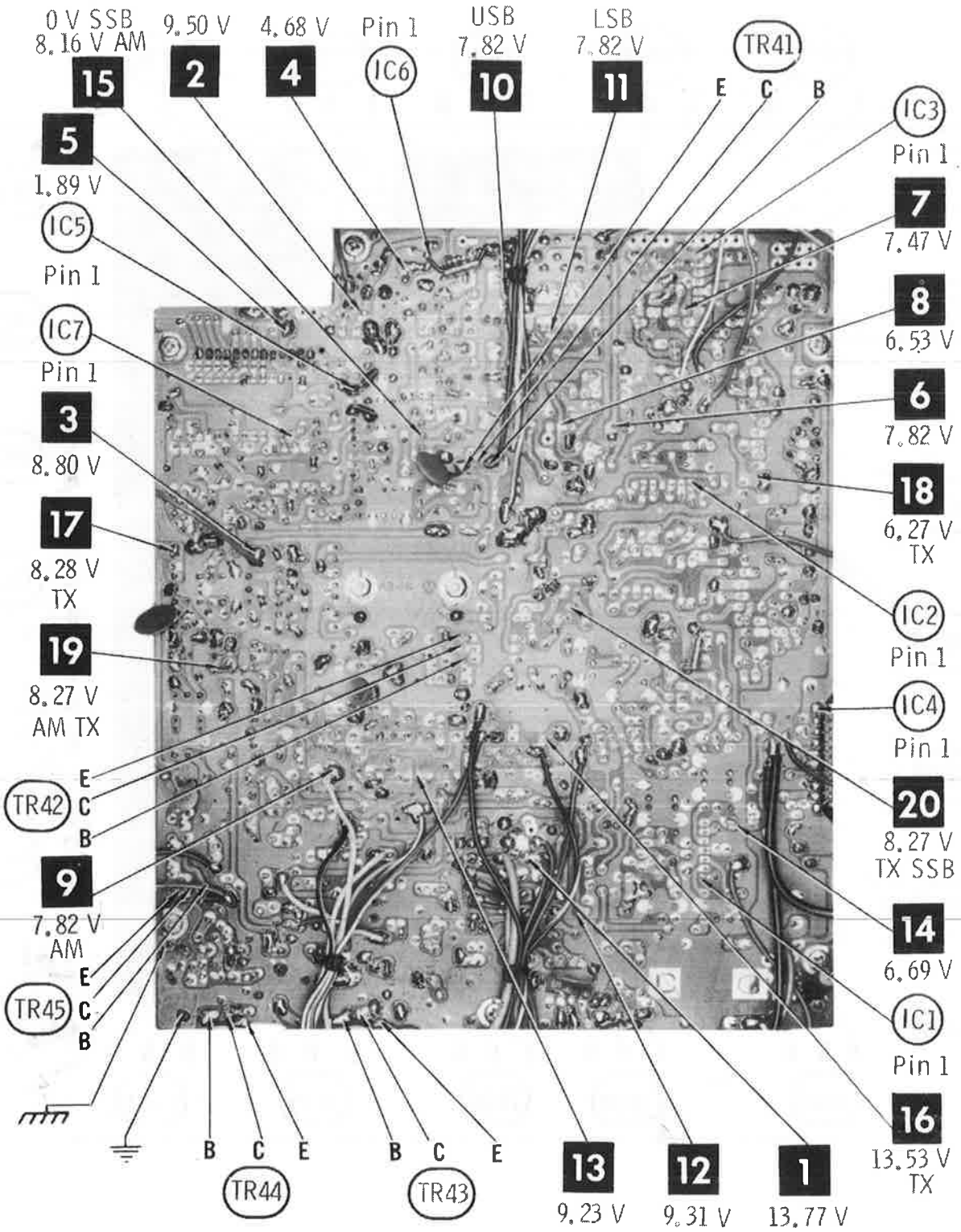

MAIN BOARD

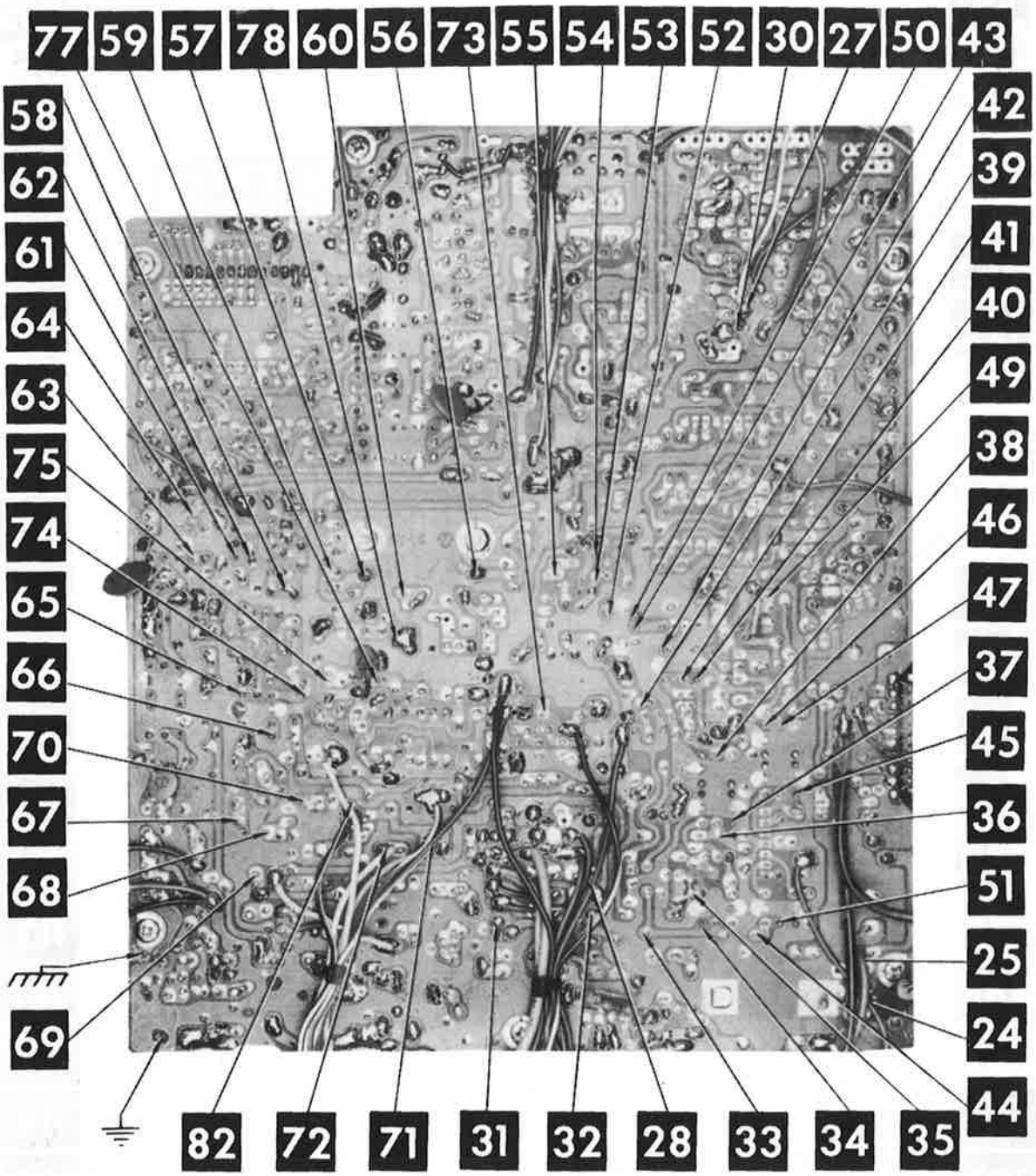
77
59
57
78
60
56
73
55
54
53
52
30
27
50
43
58
62
61
64
63
75
74
65
66
70
67
68
69
42
39
41
40
49
38
46
47
37
45
36
51
25
24
44
82
72
71
31
32
28
33
34
35

MAIN BOARD

A Howard W. Sams CIRCUITRACE® Photo

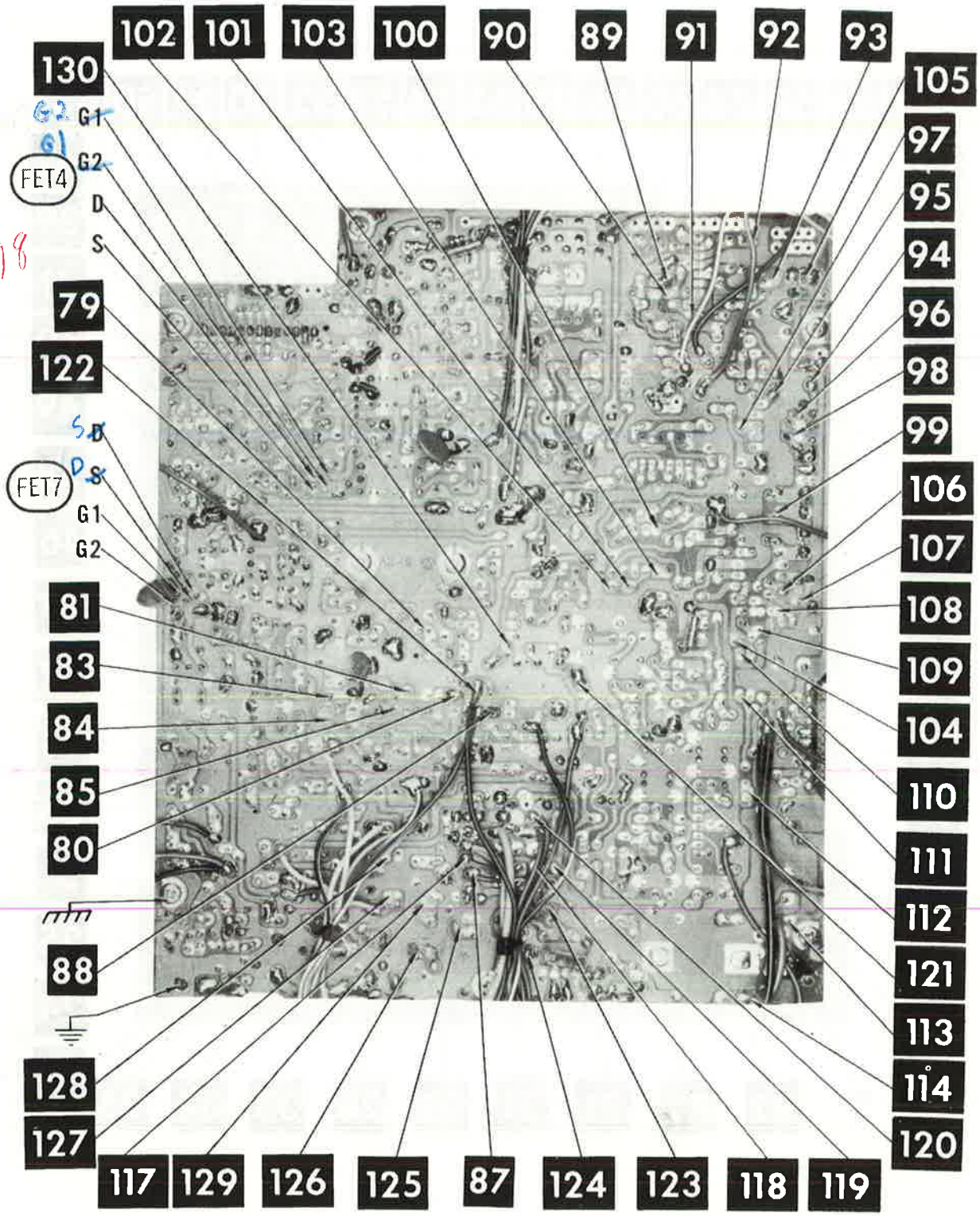

MAIN BOARD

A Howard W. Sams CIRCUITRACE® Photo

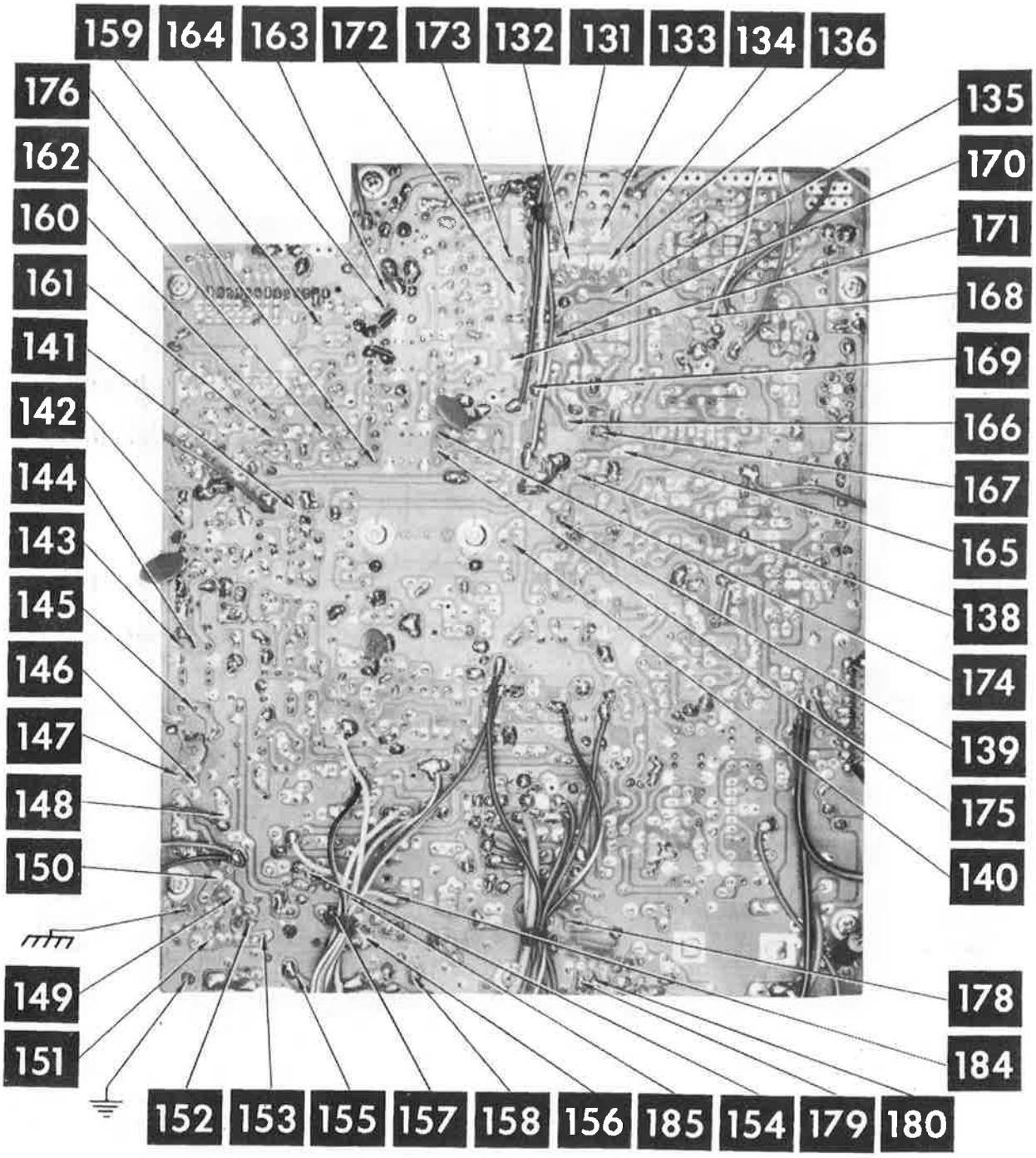

COBRA MODEL 139XLR

MAIN BOARD

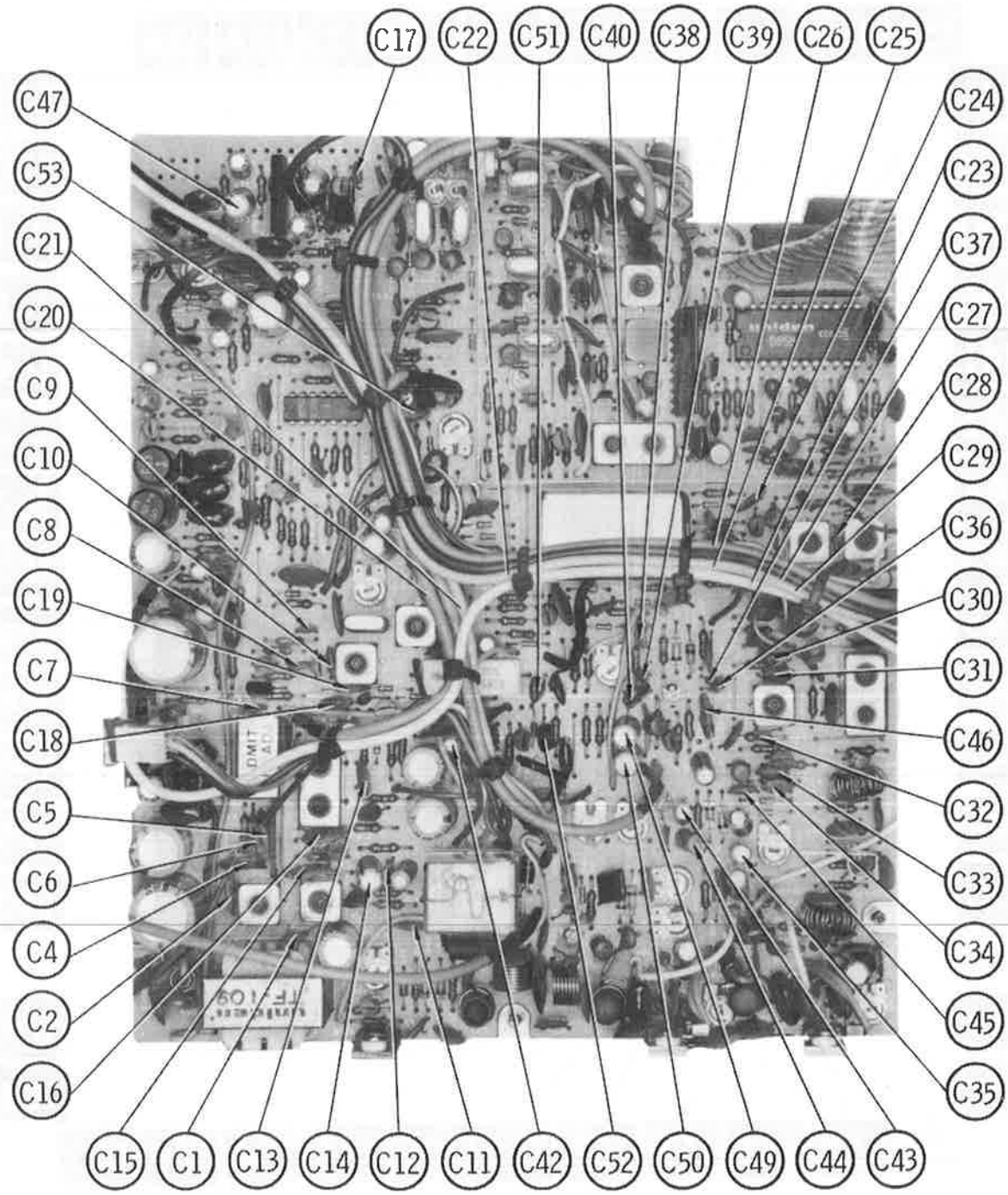
C17
C22
C51
C40
C38
C39
C26
C25
C47
C53
C21
C20
C9
C10
C8
C19
C7
C18
C5
C6
C4
C2
C16
C24
C23
C37
C27
C28
C29
C36
C30
C31
C46
C32
C33
C34
C45
C35
C15
C1
C13
C14
C12
C11
C42
C52
C50
C49
C44
C43

MAIN BOARD

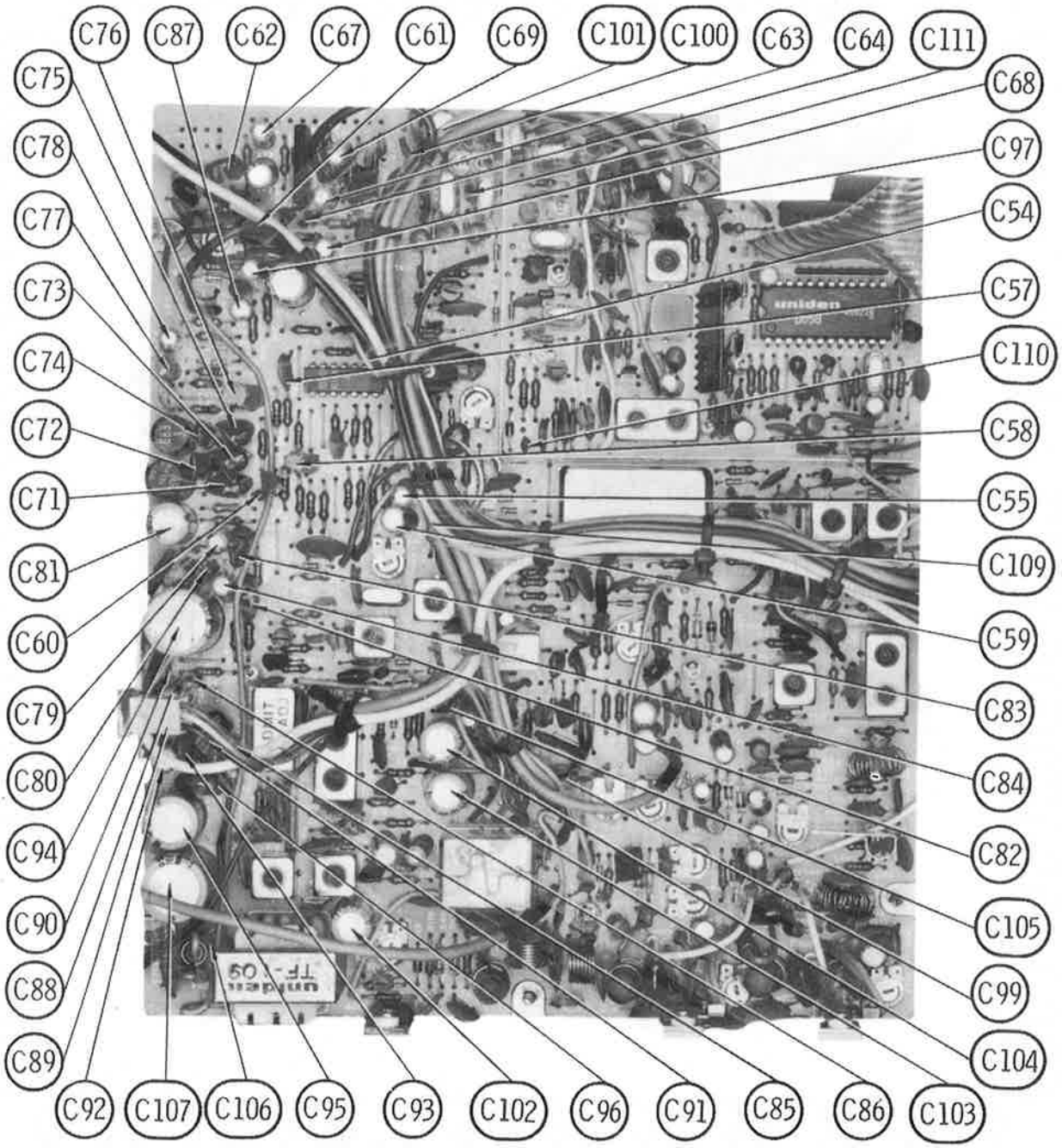
C76
C87
C62
C67
C61
C69
C101
C100
C63
C64
C111
C75
C68
C78
C97
C77
C54
C73
C57
C74
C110
C72
C58
C71
C55
C81
C109
C60
C59
C79
C83
C80
C84
C94
C82
C90
C105
C88
C99
C89
C104
C92
C107
C106
C95
C93
C102
C96
C91
C85
C86
C103

MAIN BOARD

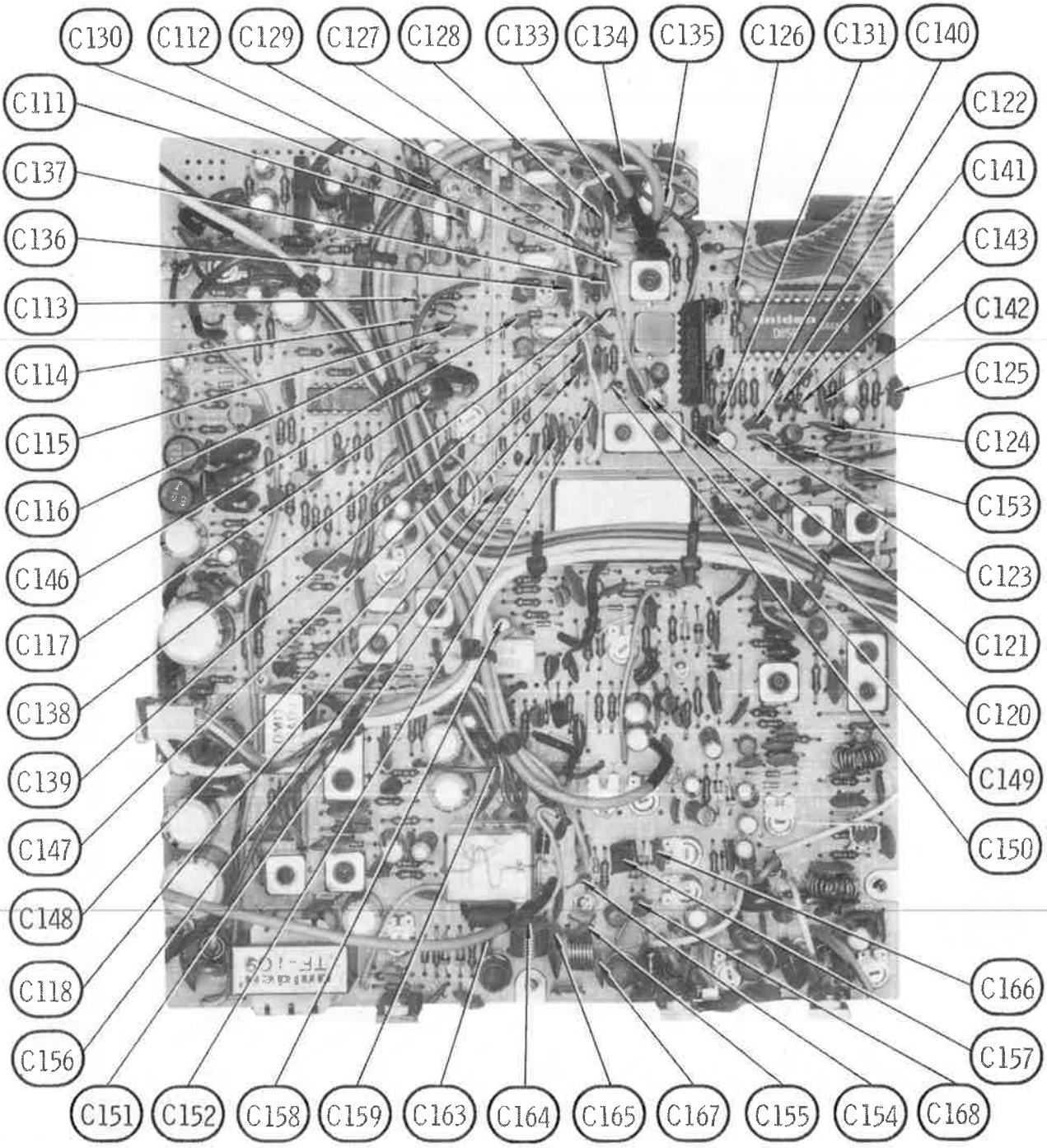
C130
C112
C129
C127
C128
C133
C134
C135
C126
C131
C140
C111
C137
C136
C113
C114
C115
C116
C146
C117
C138
C139
C147
C148
C118
C156
C151
C152
C158
C159
C163
C164
C165
C167
C155
C154
C168
C157
C166
C150
C149
C120
C121
C123
C153
C124
C125
C142
C143
C141
C122

MAIN BOARD

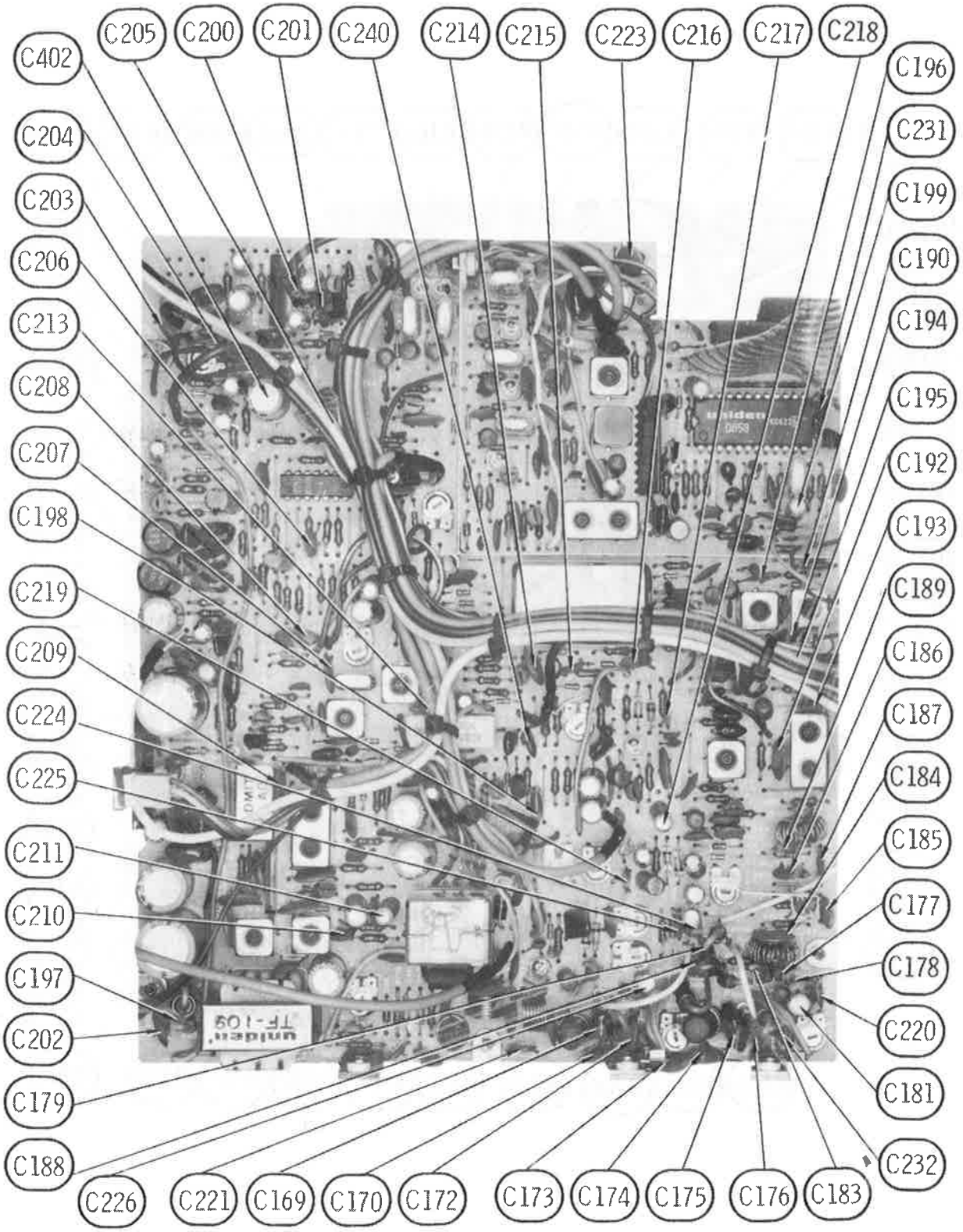
C402
C205
C200
C201
C240
C214
C215
C223
C216
C217
C218
C196
C204
C231
C203
C199
C206
C190
C213
C194
C208
C195
C207
C192
C198
C193
C219
C189
C209
C186
C224
C187
C225
C184
C211
C185
C210
C177
C197
C178
C202
C220
C179
C181
C188
C232
C226
C221
C169
C170
C172
C173
C174
C175
C176
C183

MAIN BOARD

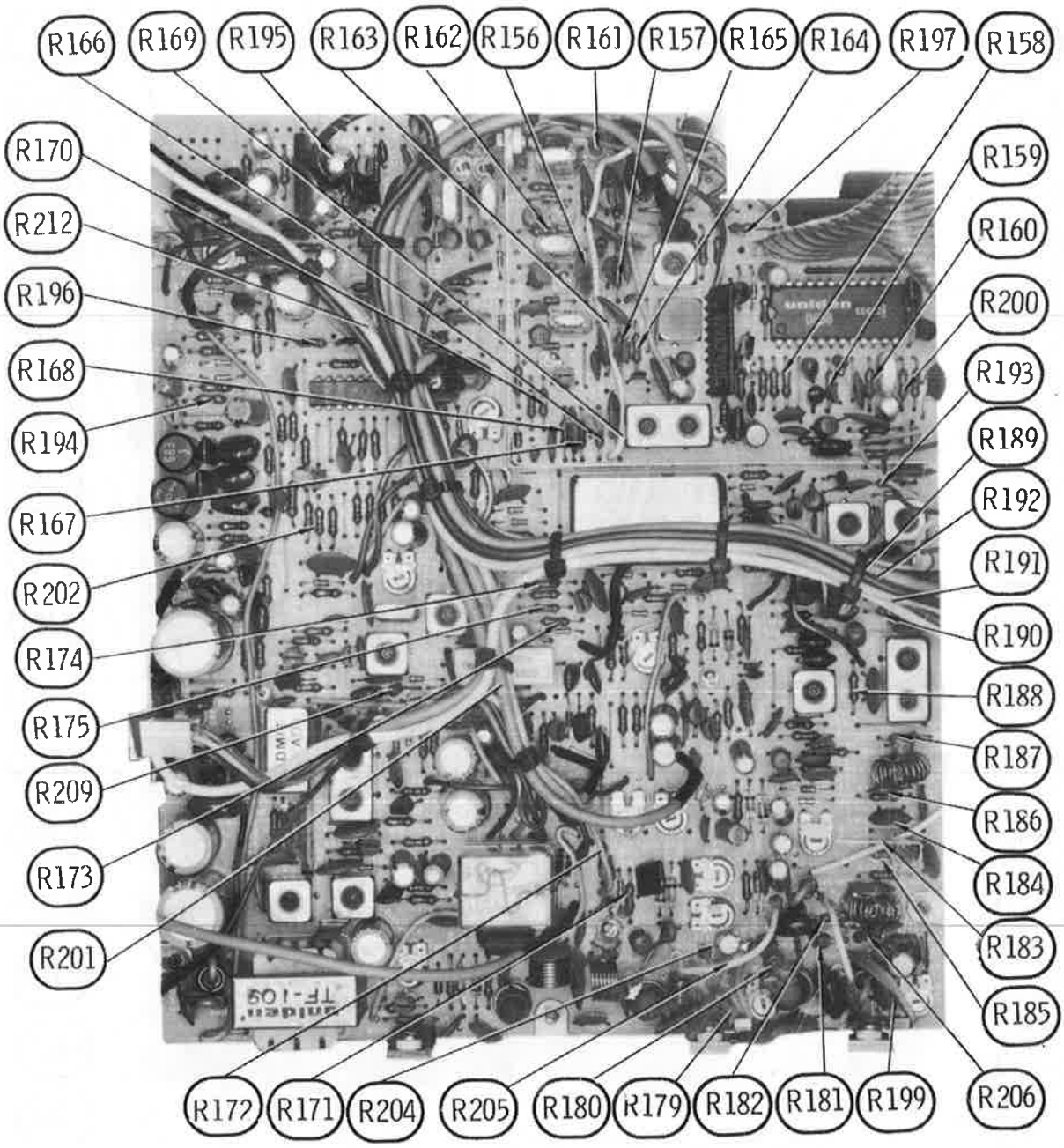
R166
R169
R195
R163
R162
R156
R161
R157
R165
R164
R197
R158
R170
R212
R196
R168
R194
R167
R202
R174
R175
R209
R173
R201
R159
R160
R200
R193
R189
R192
R191
R190
R188
R187
R186
R184
R183
R185
R172
R171
R204
R205
R180
R179
R182
R181
R199
R206

MAIN BOARD

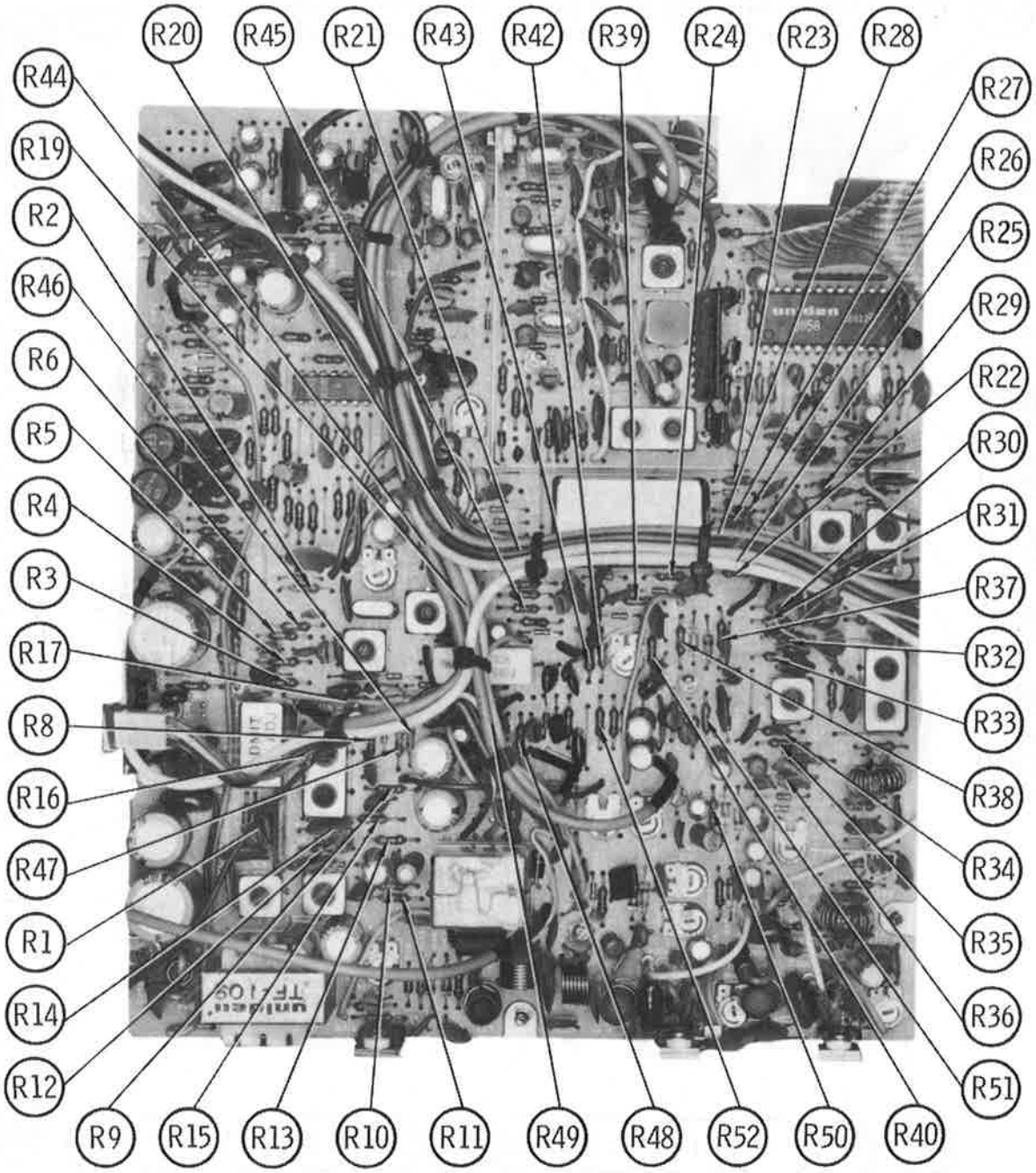
R20
R45
R21
R43
R42
R39
R24
R23
R28
R44
R19
R2
R46
R6
R5
R4
R3
R17
R8
R16
R47
R1
R14
R12
R9
R15
R13
R10
R11
R49
R48
R52
R50
R40
R51
R36
R35
R34
R38
R33
R32
R37
R31
R30
R22
R29
R25
R26
R27

MAIN BOARD

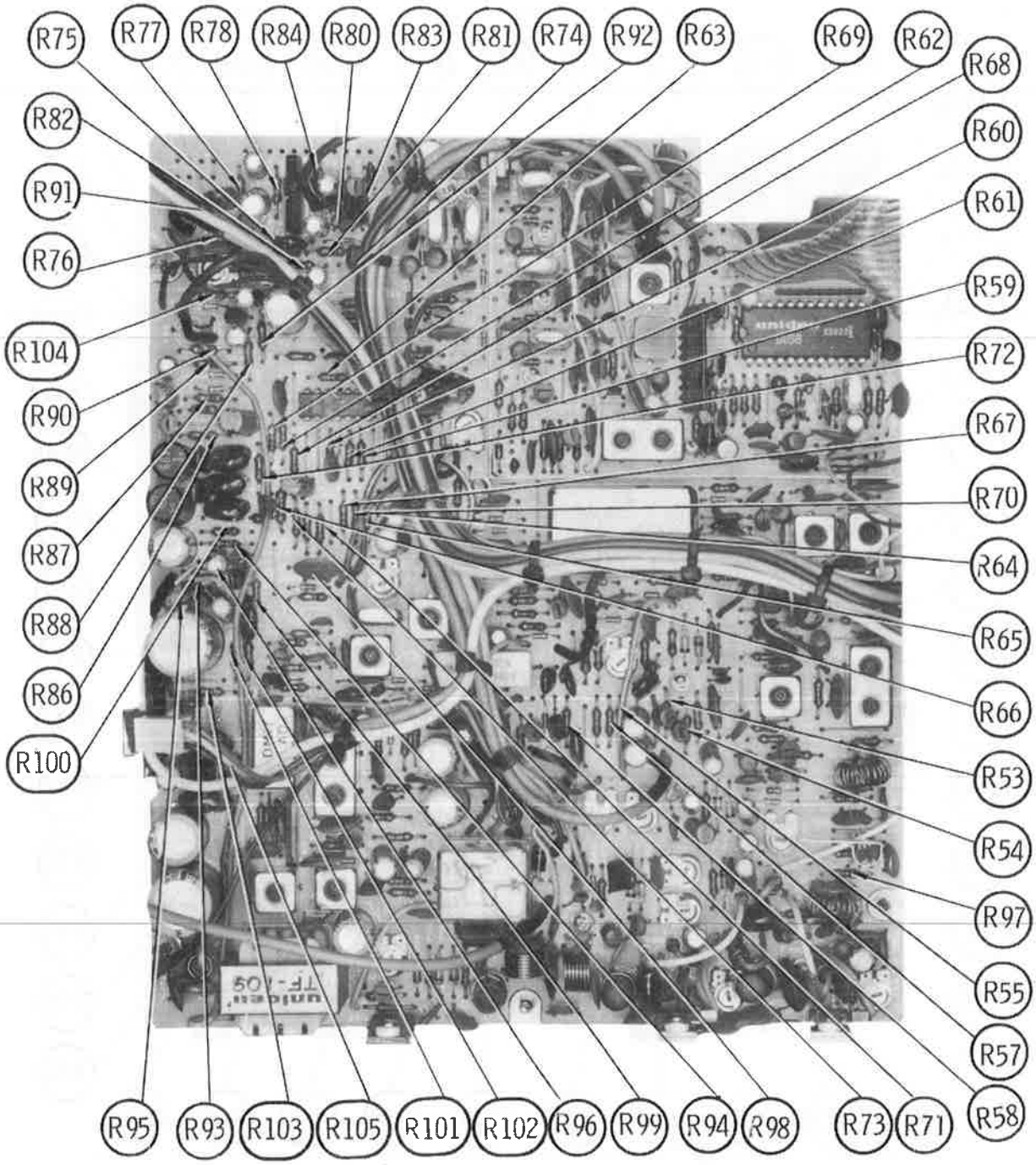
R75
R77
R78
R84
R80
R83
R81
R74
R92
R63
R69
R62
R68
R82
R60
R91
R61
R76
R59
R104
R72
R90
R67
R89
R70
R87
R64
R88
R65
R86
R66
R100
R53
R54
R97
R55
R57
R58
R95
R93
R103
R105
R101
R102
R96
R99
R94
R98
R73
R71

MAIN BOARD

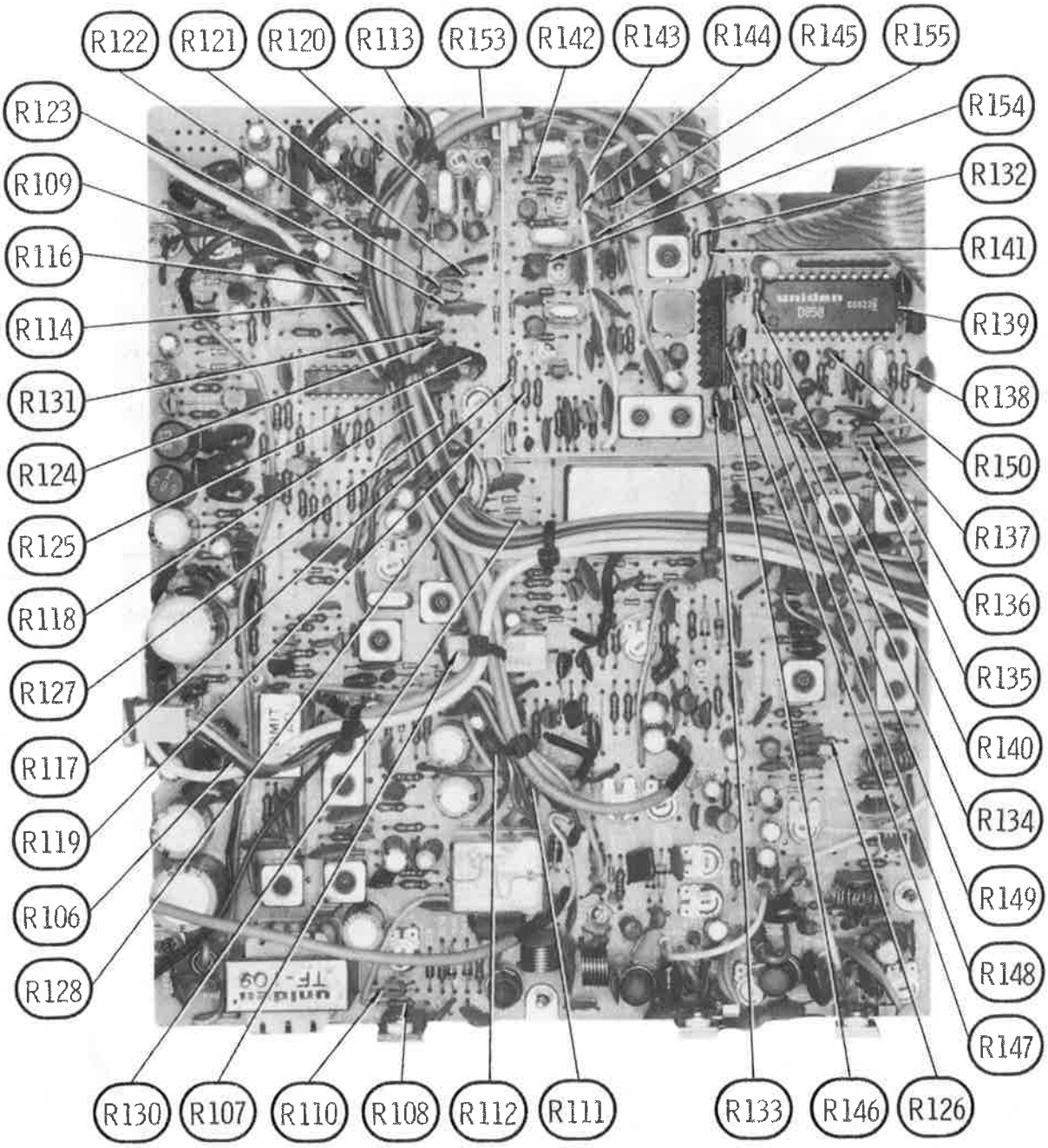
R122
R121
R120
R113
R153
R142
R143
R144
R145
R155
R123
R109
R116
R114
R131
R124
R125
R118
R127
R117
R119
R106
R128
R154
R132
R141
R139
R138
R150
R137
R136
R135
R140
R134
R149
R148
R147
R130
R107
R110
R108
R112
R111
R133
R146
R126

MAIN BOARD

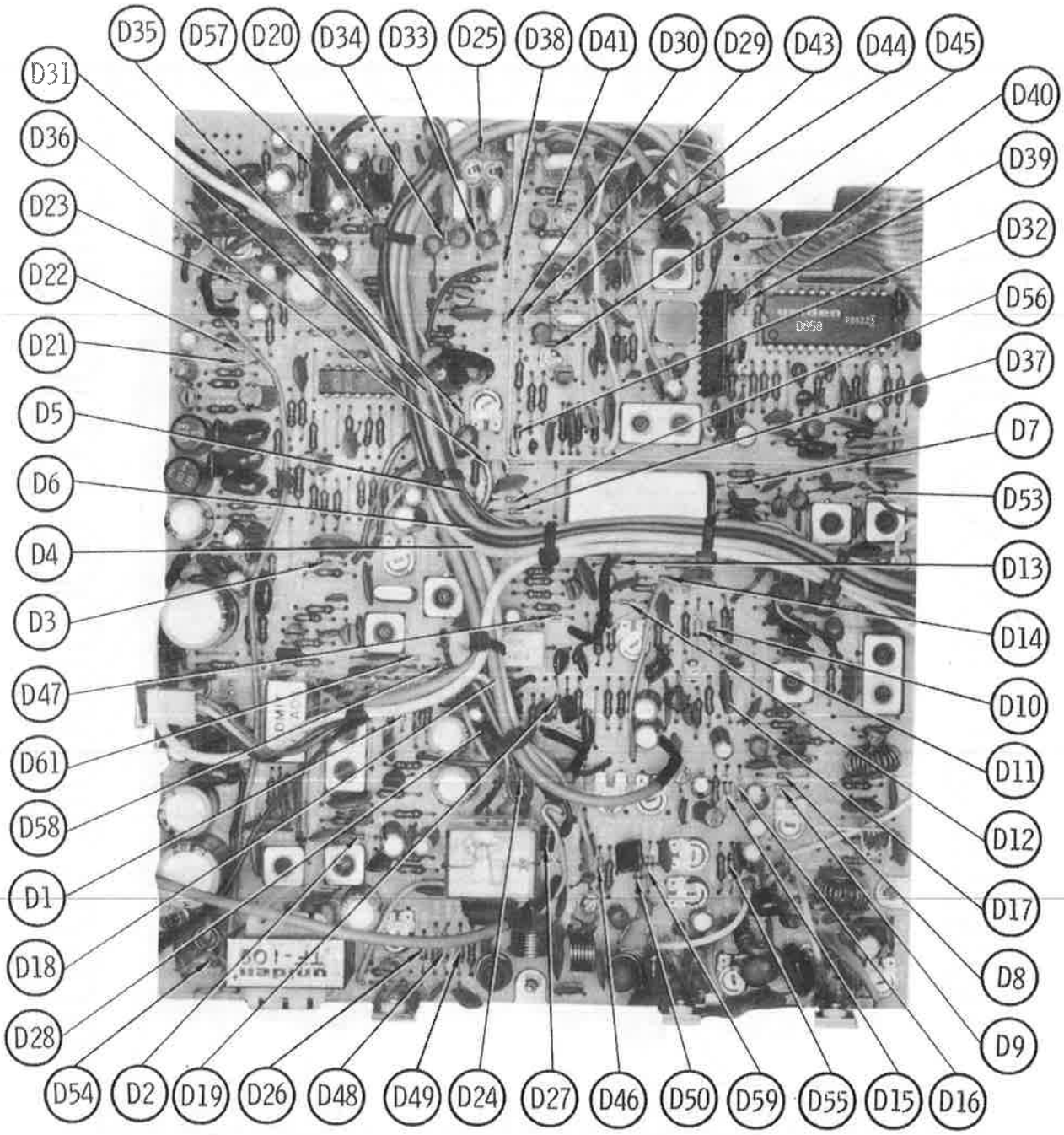
D35
D57
D20
D34
D33
D25
D38
D41
D30
D29
D43
D44
D45
D31
D36
D23
D22
D21
D5
D6
D4
D3
D47
D61
D58
D1
D18
D28
D54
D2
D19
D26
D48
D49
D24
D27
D46
D50
D59
D55
D15
D16
D9
D8
D17
D12
D11
D10
D14
D13
D53
D7
D37
D56
D32
D39
D40

MAIN BOARD

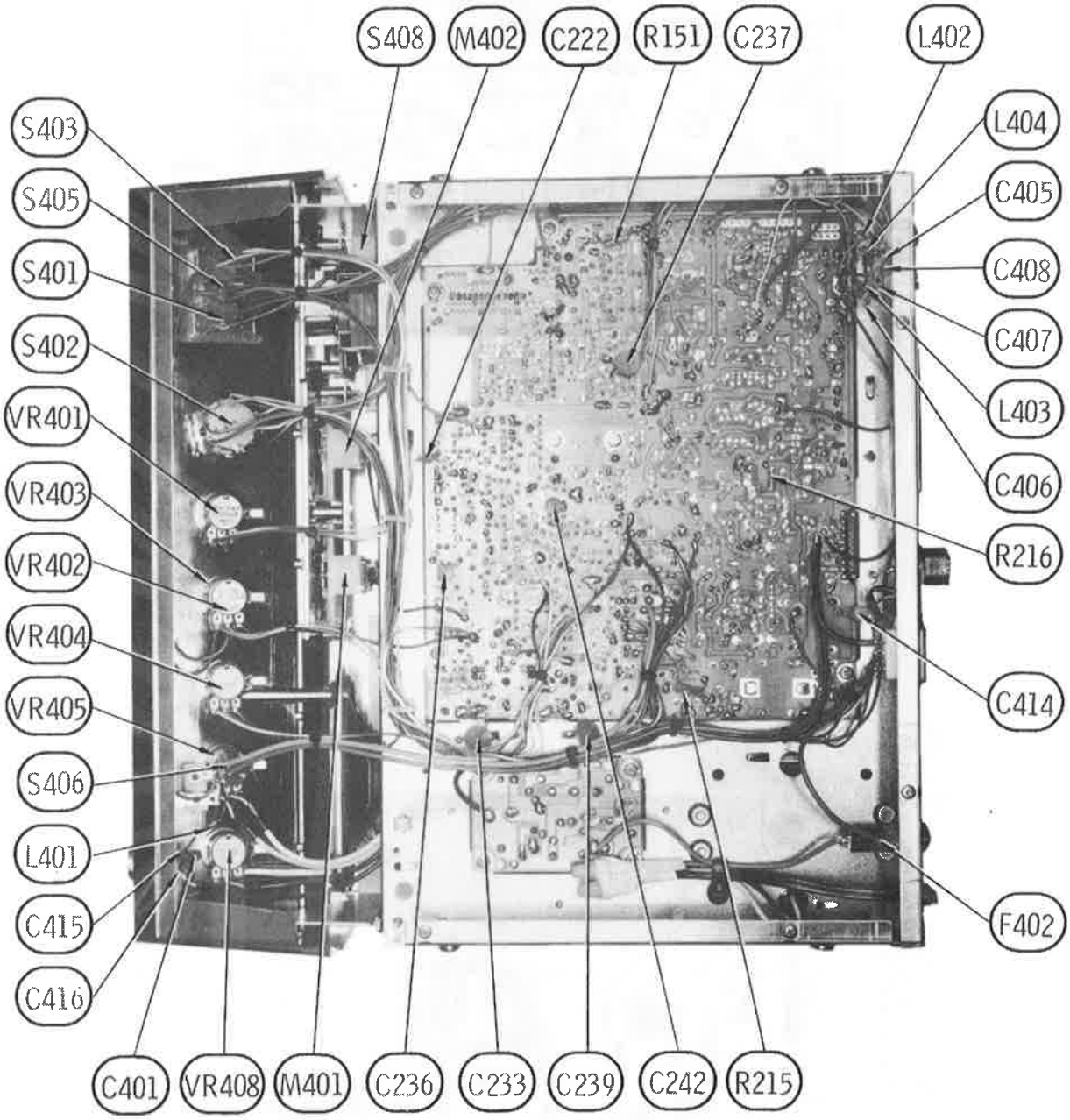

CHASSIS-BOTTOM VIEW

A Howard W. Sams CIRCUITRACE™ Photo

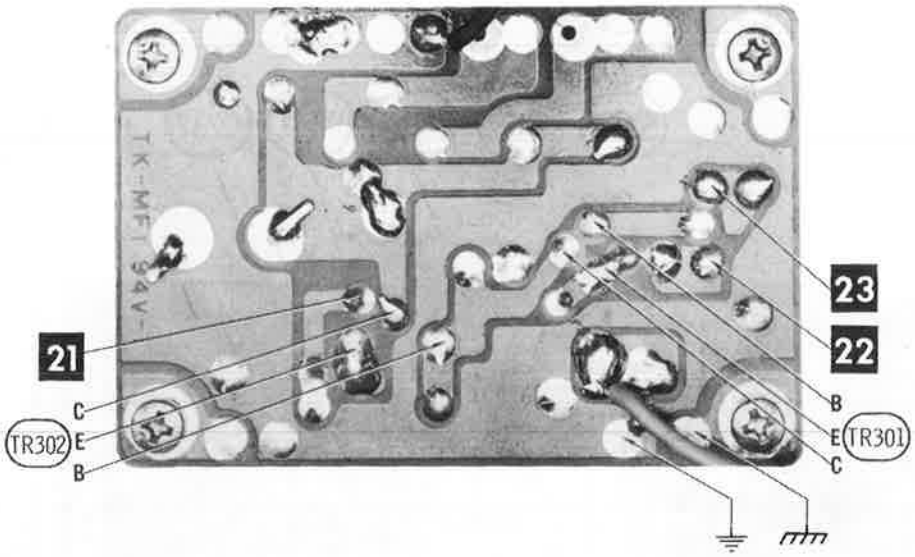

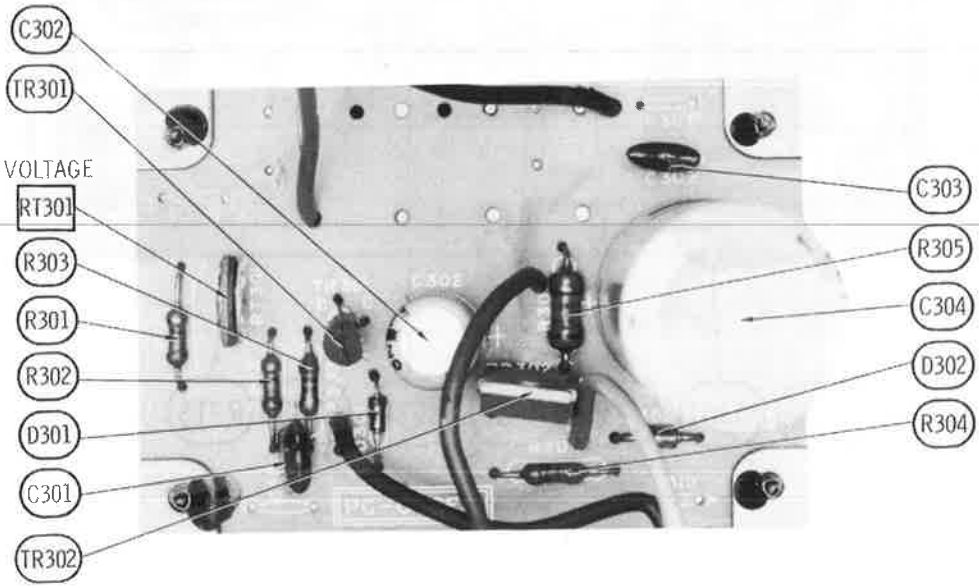

POWER SUPPLY BOARD

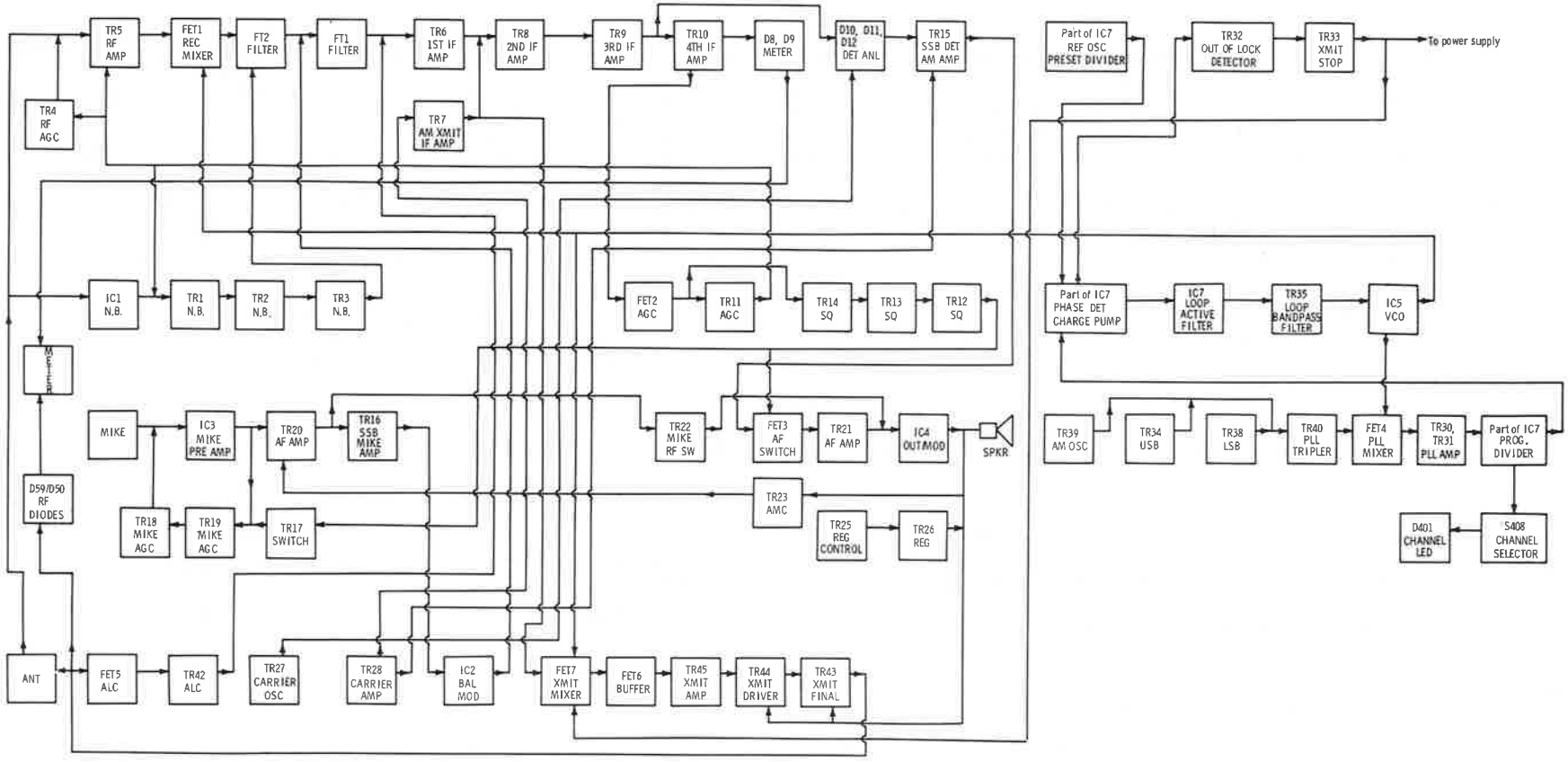

BLOCK DIAGRAM

BLOCK DIAGRAM

TRUTH CHART

H = 4.68 Volts L 0 Volts

CHANNEL	IC7 Program Divider PINS 13	14	15	16	17	18	19	20	21	USB REC/TX VCO OUTPUT IN MHz AT TP8	AM REC/TX VCO OUTPUT IN MHz AT TP8	LSB REC/TX VCO OUTPUT IN MHz AT TP8
1	H	L	L	L	H	L	L	H	L	34.7675	34.765	34.7625
2	L	H	L	L	H	L	L	H	L	34.7775	34.775	34.7725
3	H	H	L	L	H	L	L	H	L	34.7875	34.785	34.7825
4	H	L	H	L	H	L	L	H	L	34.8075	34.705	34.8025
5	L	H	H	L	H	L	L	H	L	34.8175	34.815	34.8125
6	H	H	H	L	H	L	L	H	L	34.8275	34.825	34.8225
7	L	L	L	H	H	L	L	H	L	34.8375	34.835	34.8325
8	L	L	L	L	L	L	L	L	H	34.8575	34.855	34.8525
9	H	L	L	L	L	L	L	L	H	34.8675	34.865	34.8625
10	L	H	L	L	L	L	L	L	H	34.8775	34.875	34.8725
11	H	H	L	L	L	L	L	L	H	34.8875	34.885	34.8825
12	H	L	H	L	L	L	L	L	H	34.9075	34.905	34.9125
13	L	H	H	L	L	L	L	L	H	34.9175	34.915	34.9125
14	H	H	H	L	L	L	L	L	H	34.9275	34.925	34.9225
15	L	L	L	H	L	L	L	L	H	34.9375	34.935	34.9325
16	L	L	L	L	H	L	L	L	H	34.9575	34.955	34.9525
17	H	L	L	L	H	L	L	L	H	34.9675	34.965	34.9625
18	L	H	L	L	H	L	L	L	H	34.9775	34.975	34.9725
19	H	H	L	L	H	L	L	L	H	34.9875	34.985	34.9825
20	H	L	H	L	H	L	L	L	H	35.0075	34.005	35.0025
21	L	H	H	L	H	L	L	L	H	35.0175	34.015	35.0125
22	H	H	H	L	H	L	L	L	H	35.0275	34.025	35.0225
23	L	L	L	L	L	H	L	L	H	35.0575	34.055	35.0525
24	L	L	L	H	H	L	L	L	H	35.0375	34.035	35.0325
25	H	L	L	H	H	L	L	L	H	35.0475	34.045	35.0425
26	H	L	L	L	L	H	L	L	H	35.0675	34.065	35.0625
27	L	H	L	L	L	H	L	L	H	35.0775	34.075	35.0725
28	H	H	L	L	L	H	L	L	H	35.0875	34.085	35.0825
29	L	L	H	L	L	H	L	L	H	35.0975	34.095	35.0925
30	H	L	H	L	L	H	L	L	H	35.1075	34.105	35.1025
31	L	H	H	L	L	H	L	L	H	35.1175	34.115	35.1125
32	H	H	H	L	L	H	L	L	H	35.1275	34.125	35.1225
33	L	L	L	H	L	H	L	L	H	35.1375	34.135	35.1325
34	H	L	L	H	L	H	L	L	H	35.1475	34.145	35.1425
35	L	L	L	L	H	H	L	L	H	35.1575	34.155	35.1525
36	H	L	L	L	H	H	L	L	H	35.1675	34.165	35.1625
37	L	H	L	L	H	H	L	L	H	35.1775	34.175	35.1725
38	H	H	L	L	H	H	L	L	H	35.1875	34.185	35.1825
39	L	L	H	L	H	H	L	L	H	35.1975	34.195	35.1926
40	H	L	H	L	H	H	L	L	H	35.2075	34.205	35.2025

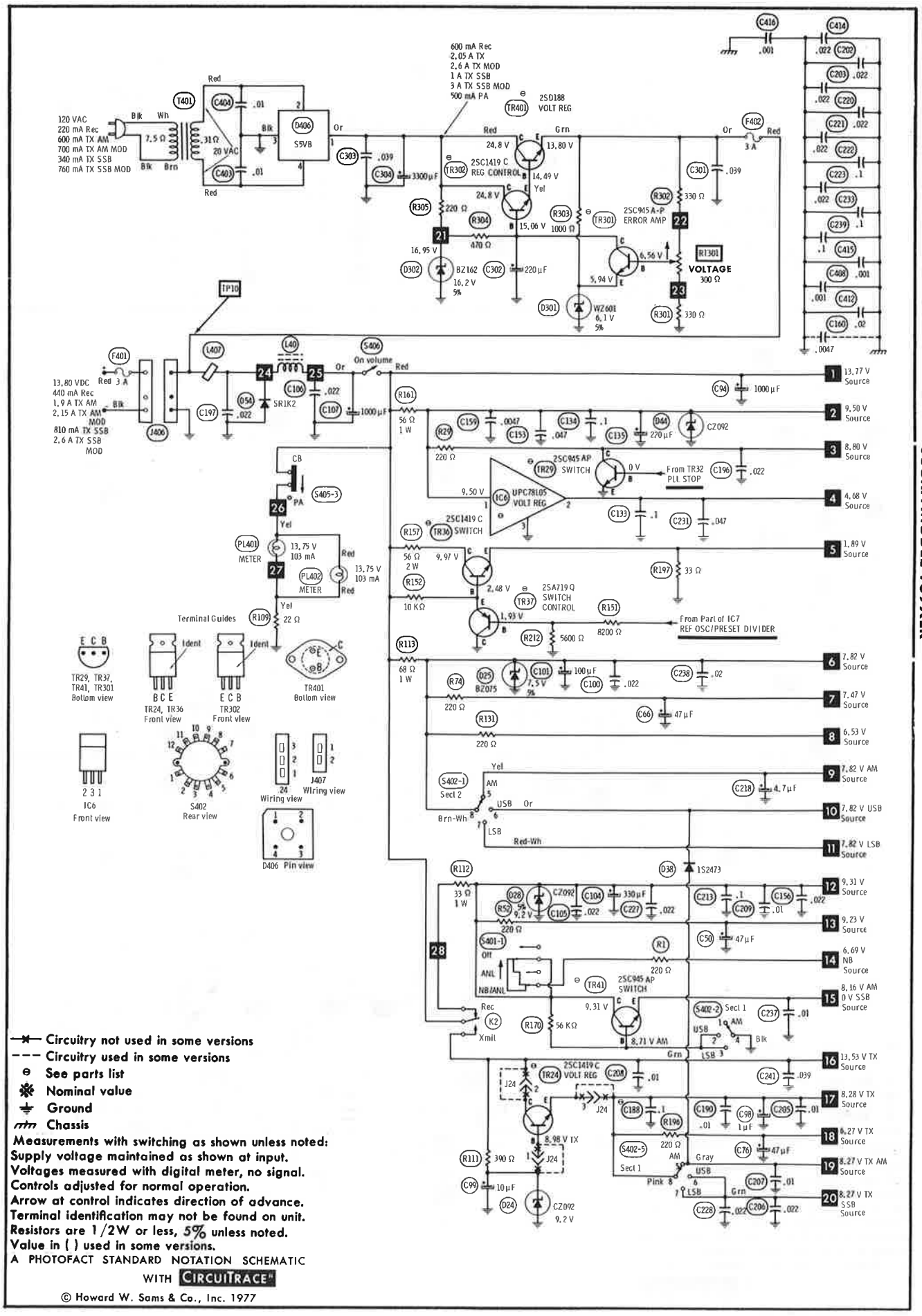
120 VAC
220 mA Rec
600 mA TX AM
700 mA TX AM MOD
340 mA TX SSB
760 mA TX SSB MOD
T401
C404 .01
C403 .01
D406 S5VB
7.5 Ω
31 Ω
20 VAC
600 mA Rec
2.05 A TX
2.6 A TX MOD
1 A TX SSB
3 A TX SSB MOD
500 mA PA
TR401 2SD188 VOLT REG
24.8 V
13.80 V
TR302 2SC1419 C REG CONTROL
14.49 V
15.06 V
R305 220 Ω
R304 470 Ω
R303 1000 Ω
TR301 2SC945 A-P ERROR AMP
R302 330 Ω
R301 330 Ω
RT301 VOLTAGE 300 Ω
6.56 V
5.94 V
16.95 V
D302 BZ162 16.2 V 5%
C302 220 µF
D301 WZ601 6.1 V 5%
C303 .039
C304 3300 µF
C301 .039
F402 3 A
C416 .001
C414 .022
C202 .022
C203 .022
C220 .022
C221 .022
C222 .022
C223 .1
C233 .022
C239 .1
C415 .1
C408 .001
C412 .001
C160 .02
.0047
TP10
F401 3 A
13.80 VDC
440 mA Rec
1.9 A TX AM
2.15 A TX AM MOD
810 mA TX SSB
2.6 A TX SSB MOD
J406
L407
L40
C106 .022
C107 1000 µF
D54 SR1K2
C197 .022
S406 On volume
R161 56 Ω 1 W
C94 1000 µF
R29 220 Ω
C159 .0047
C153 .047
C134 .1
C135 .1
D44 220 µF
CZ092
TR29 2SC945 AP SWITCH
0 V
From TR32 PLL STOP
C196 .022
IC6 UPC78L05 VOLT REG
9.50 V
C133 .1
C231 .047
CB
PA
S405-3
PL401 METER
13.75 V 103 mA
PL402 METER
13.75 V 103 mA
R109 22 Ω
TR36 2SC1419 C SWITCH
R157 56 Ω 2 W
9.97 V
R152 10 KΩ
2.48 V
TR37 2SA719 Q SWITCH CONTROL
1.93 V
R151 8200 Ω
From Part of IC7 REF OSC/PRESET DIVIDER
R212 5600 Ω
R197 33 Ω
R113 68 Ω 1 W
R74 220 Ω
D25 BZ075 7.5 V 5%
C101 100 µF
C100 .022
C238 .02
R131 220 Ω
C66 47 µF
S402-1 Sect 2
AM
USB
LSB
Brn-Wh
Red-Wh
C218 4.7 µF
R112 33 Ω 1 W
D38 1S2473
D28 CZ092 9.2 V
R52 220 Ω
C104 330 µF
C105 .022
C227 .022
C213 .1
C209 .01
C156 .022
C50 47 µF
S401-1 Off ANL NB/ANL
R1 220 Ω
TR41 2SC945 AP SWITCH
9.31 V
R170 56 KΩ
K2 Rec Xmit
S402-2 Sect 1
C237 .01
8.71 V AM
TR24 2SC1419C VOLT REG
C208 .01
C241 .039
J24
C188 .1
R196 220 Ω
C190 .01
C98 1 µF
C205 .01
8.98 V TX
R111 390 Ω
C99 10 µF
D24 CZ092 9.2 V
S402-5 Sect 1
AM
USB
LSB
Gray
Pink
C76 47 µF
C207 .01
C228 .022
C206 .022
1 13.77 V Source
2 9.50 V Source
3 8.80 V Source
4 4.68 V Source
5 1.89 V Source
6 7.82 V Source
7 7.47 V Source
8 6.53 V Source
9 7.82 V AM Source
10 7.82 V USB Source
11 7.82 V LSB Source
12 9.31 V Source
13 9.23 V Source
14 6.69 V NB Source
15 8.16 V AM 0 V SSB Source
16 13.53 V TX Source
17 8.28 V TX Source
18 6.27 V TX Source
19 8.27 V TX AM Source
20 8.27 V TX SSB Source
Terminal Guides
TR29, TR37, TR41, TR301 Bottom view
TR24, TR36 Front view
TR302 Front view
TR401 Bottom view
IC6 Front view
S402 Rear view
Wiring view
J407 Wiring view
D406 Pin view
Circuitry not used in some versions
Circuitry used in some versions
See parts list
Nominal value
Ground
Chassis
Measurements with switching as shown unless noted:
Supply voltage maintained as shown at input.
Voltages measured with digital meter, no signal.
Controls adjusted for normal operation.
Arrow at control indicates direction of advance.
Terminal identification may not be found on unit.
Resistors are 1/2W or less, 5% unless noted.
Value in ( ) used in some versions.
A PHOTOFACT STANDARD NOTATION SCHEMATIC
WITH CIRCUITRACE
© Howard W. Sams & Co., Inc. 1977

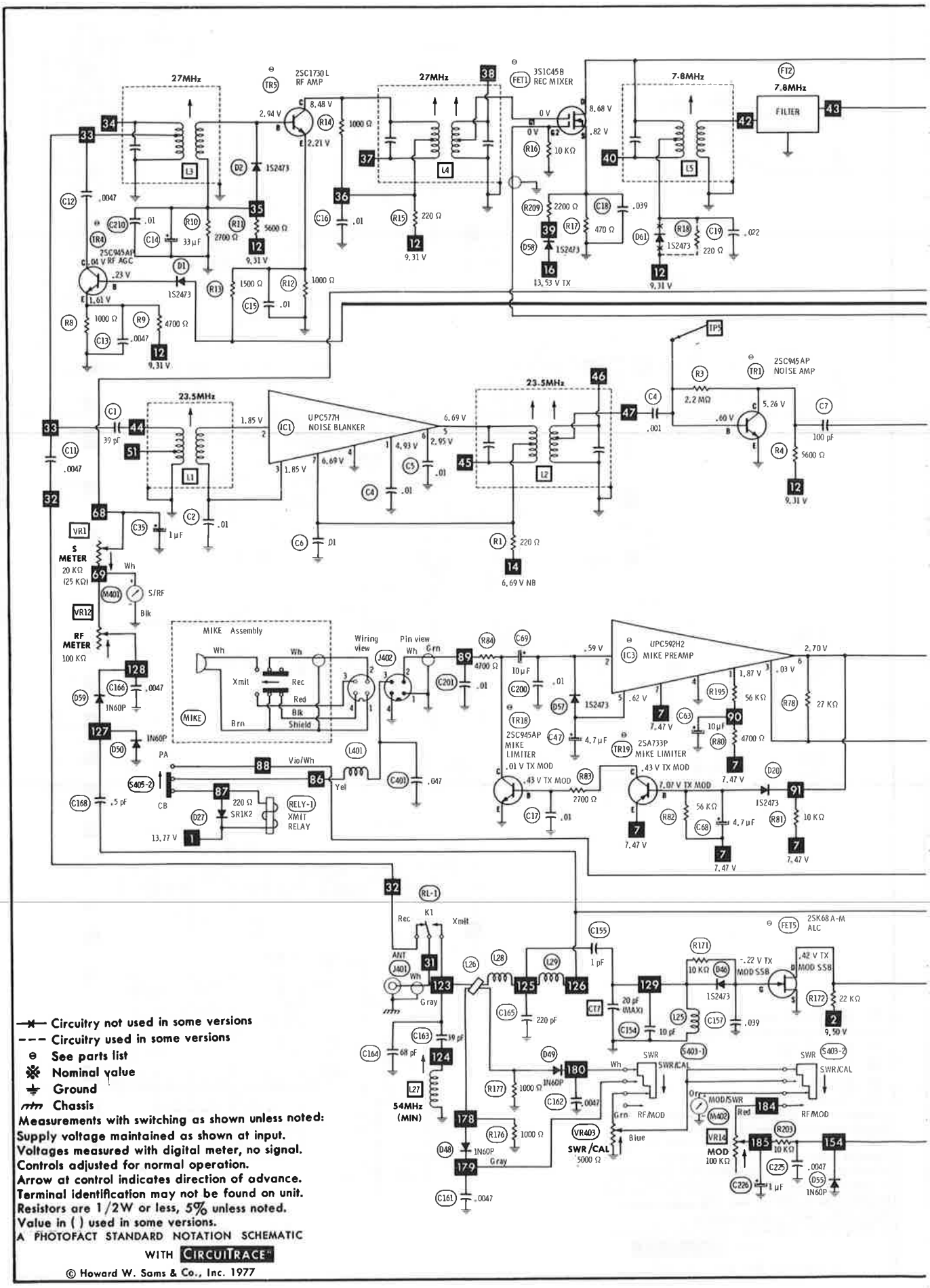

- Circuitry not used in some versions
- Circuitry used in some versions
- See parts list
- Nominal value
- Ground
- Chassis

Measurements with switching as shown unless noted:
Supply voltage maintained as shown at input.
Voltages measured with digital meter, no signal.
Controls adjusted for normal operation.
Arrow at control indicates direction of advance.
Terminal identification may not be found on unit.
Resistors are 1/2W or less, 5% unless noted.
Value in ( ) used in some versions.

A PHOTOFACT STANDARD NOTATION SCHEMATIC WITH CIRCUITRACE™

© Howard W. Sams & Co., Inc. 1977

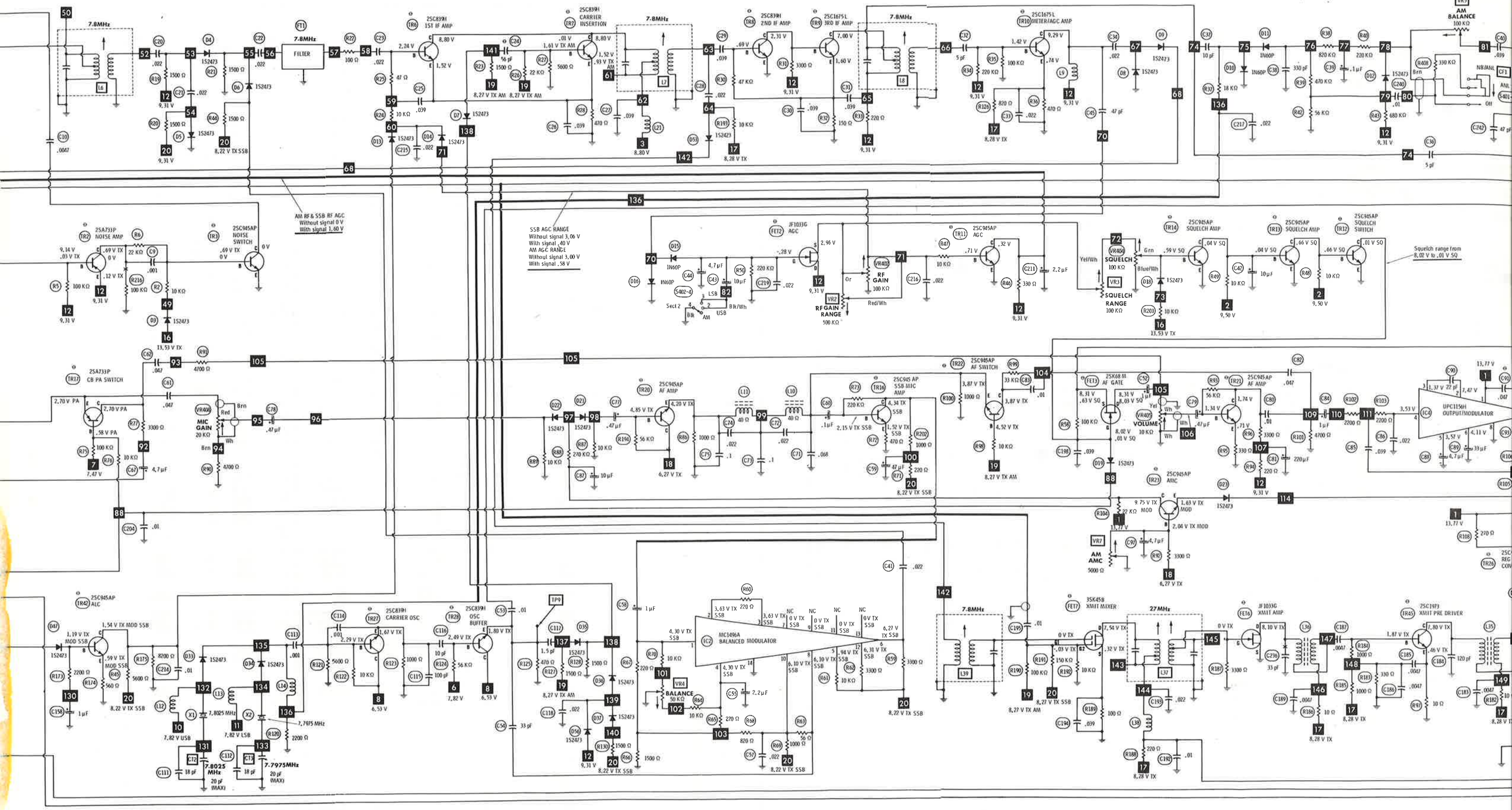
7.8MHz
FILTER
2SC839H 1ST IF AMP
2SC839H CARRIER INSERTION
2SC839H 2ND IF AMP
2SC1675L 3RD IF AMP
2SC1675L METER/AGC AMP
AM BALANCE 100 KΩ
NB/ANL
ANL
OFF
AM RF & SSB RF AGC
Without signal 0 V
With signal 1.00 V
SSB AGC RANGE
Without signal 3.06 V
With signal .40 V
AM AGC RANGE
Without signal 3.00 V
With signal .58 V
2SA733P NOISE AMP
2SC945AP NOISE SWITCH
JF1033G AGC
RF GAIN 100 KΩ
RF GAIN RANGE 500 KΩ
2SC945AP AGC
SQUELCH 100 KΩ
SQUELCH RANGE 100 KΩ
2SC945AP SQUELCH AMP
2SC945AP SQUELCH SWITCH
Squelch range from 8.02 V to .01 V SQ
2SA733P CB PA SWITCH
MIC GAIN 20 KΩ
2SC945AP AF SWITCH
2SC945AP AF AMP
2SC945 AP SSB MIC AMP
2SK68 M AF GATE
VOLUME 10 KΩ
2SC945AP AF AMP
UPC1156H OUTPUT/MODULATOR
2SC945AP AMC
AM AMC 5000 Ω
2SC945AP ALC
2SC839H CARRIER OSC
2SC839H OSC BUFFER
MC1496A BALANCED MODULATOR
BALANCE 50 KΩ
7.8025 MHz
7.7975MHz
20 pF (MAX)
35K45B XMIT MIXER
27MHz
JF1033G XMIT AMP
2SC1973 XMIT PRE DRIVER

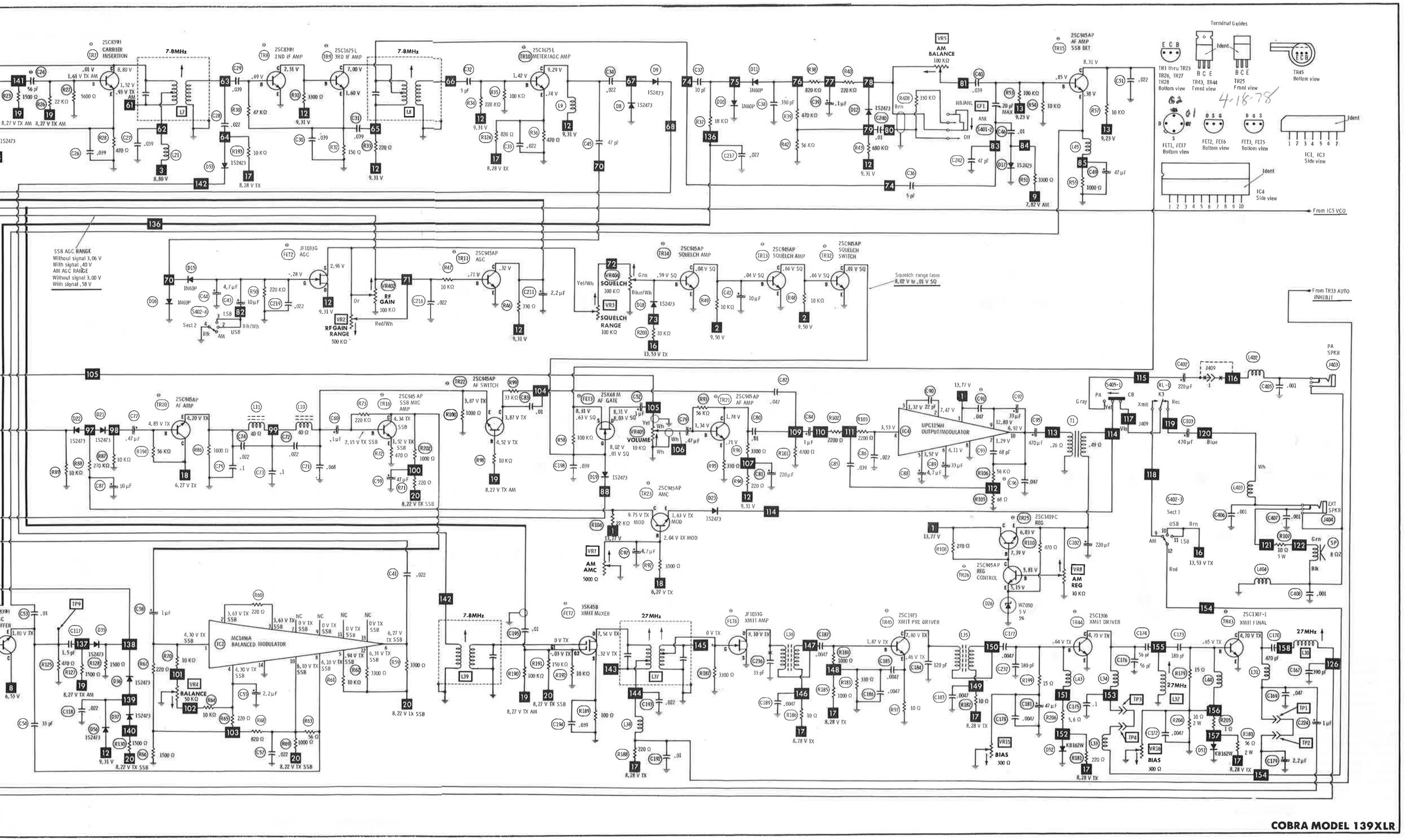

COBRA MODEL 139XLR

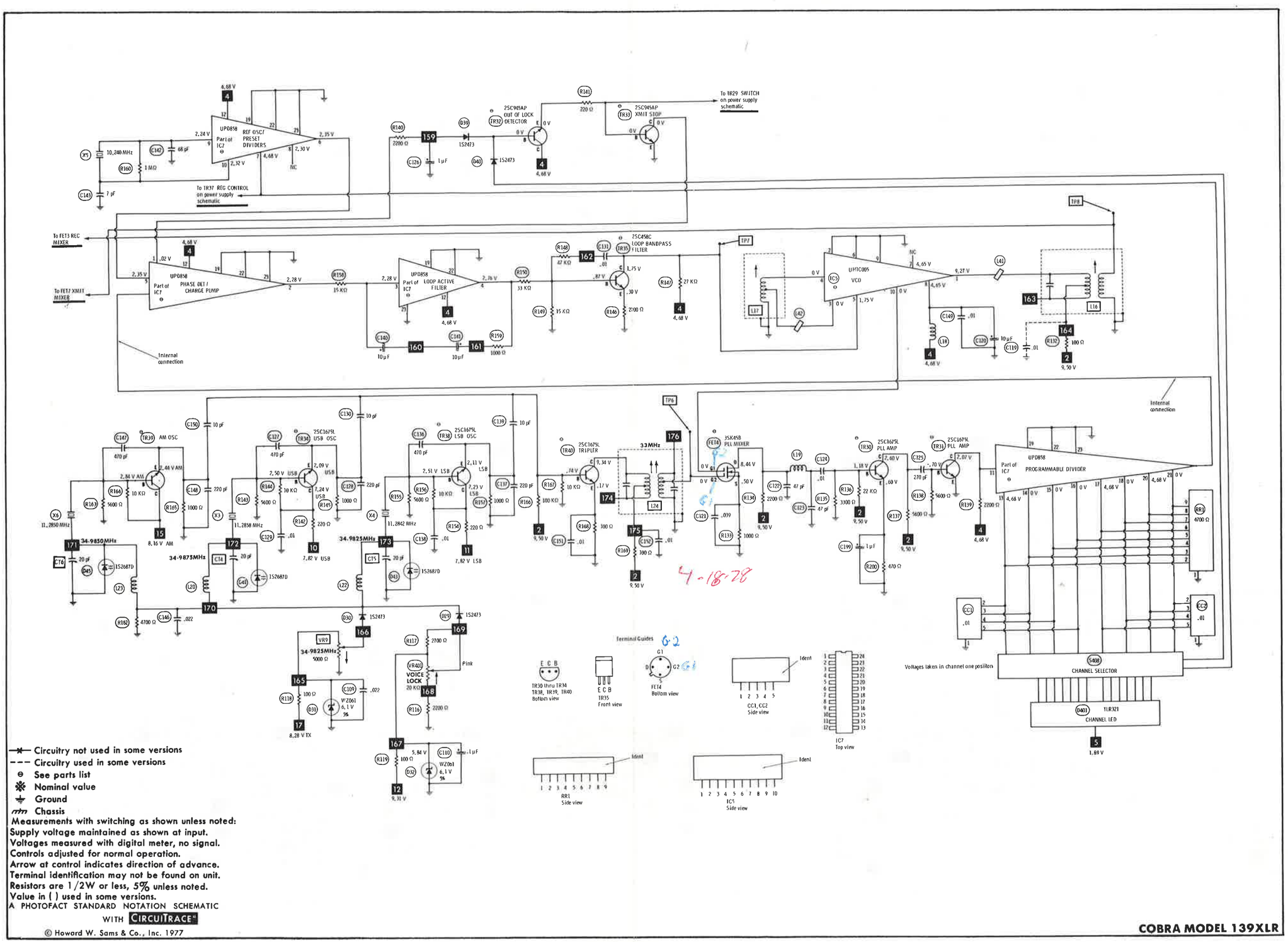

PARTS LIST AND DES

(When ordering parts, state Model,

SEMICONDUCTORS (S

ITEM No.	TYPE No.	MFGR. PART No.	G EL PA
D1	1S2473	151-035-9-001	GE
D2	1S2473	151-035-9-001	GE
D3	1S2473	151-035-9-001	GE
D4	1S2473	151-035-9-001	GE
D5	1S2473	151-035-9-001	GE
D6	1S2473	151-035-9-001	GE
D7	1S2473	151-035-9-001	GE
D8	1S2473	151-035-9-001	GE
D9	1S2473	151-035-9-001	GE
D10	1N60P	150-006-9-001	1N
D11	1N60P	150-006-9-001	1N
D12	1S2473	151-035-9-001	GE
D13	1S2473	151-035-9-001	GE
D14	1S2473	151-035-9-001	GE
D15	1N60P	150-006-9-001	1N
D16	1N60P	150-006-9-001	1N
D17	1S2473	151-035-9-001	GE
D18	1S2473	151-035-9-001	GE
D19	1S2473	151-035-9-001	GE
D20	1S2473	151-035-9-001	GE
D21	1S2473	151-035-9-001	GE
D22	1S2473	151-035-9-001	GE
D23	1S2473	151-035-9-001	GE
D24	CZ092	152-051-9-001	GE
D25	BZ075	152-079-9-004	GE
D26	WZ050	152-069-9-001	GE
D27	SR1K2	151-045-9-001	GE
D28	CZ092	152-051-9-001	GE
D29	1S2473	151-035-9-001	GE
D30	1S2473	151-035-9-001	GE
D31	WZ061	152-052-9-002	GE
D32	WZ061	152-052-9-002	GE
D33	1S2473	151-035-9-001	GE
D34	1S2473	151-035-9-001	GE
D35	1S2473	151-035-9-001	GE
D36	1S2473	151-035-9-001	GE
D37	1S2473	151-035-9-001	GE
D38	1S2473	151-035-9-001	GE
D39	1S2473	151-035-9-001	GE
D40	1S2473	151-035-9-001	GE
D41	1S2687D	153-008-9-001	GE
D43	1S2687D	153-008-9-001	GE
D44	CZ092	152-051-9-001	GE
D45	1S2687D	153-008-9-001	GE
D46	1S2473	151-035-9-001	GE
D47	1S2473	151-035-9-001	GE
D48	1N60P	150-006-9-001	1N
D49	1N60P	150-006-9-001	1N
D50	1N60P	150-006-9-001	1N
D51	KB162W	153-008-9-002	
D52	KB162W	153-008-9-002	
D53	1S2473	151-035-9-001	GE
D54	SR1K2	151-045-9-001	GE
D55	1N60P	150-006-9-001	1N
D56	1S2473	151-035-9-001	GE
D57	1S2473	151-035-9-001	GE
D58	1S2473	151-035-9-001	GE
D59	1N60P	151-006-9-001	1
D61	1S2473	151-035-9-001	GE
D301	WZ061	152-052-9-002	GE
D302	BZ162	152-057-9-001	GE
D406	S5VB	151-065-9-001	
FET1	3SK45B 3SK45(1)	182-038-9-001	GE
FET2	JF1033G JF1033	182-044-9-002 (1)	GE
FET3	2SK68M 2SK68A	182-046-9-001 (1)	GE
FET4	2SK68(1) 3SK45 3SK45B	182-038-9-001 (1)	GE
FET5	2SK68A-M 2SK68(1)	182-046-9-001	GE
FET6	JF1033G JF1033	182-044-9-002 (1)	GE
FET7	3SK45B 3SK45(1)	182-038-9-001	GE
IC1	uPC577H	307-112-9-007	
IC2	MC1946A	307-112-9-005	
IC3	uPC592H2 uPC592Hz	307-113-9-004 (1)	
IC4	uPC1156H	307-112-9-001	
IC5	uHIC-005 uHID-005	307-112-9-002 (1)	
IC6	uPC78L05 78L05(1)	307-112-9-003	
IC7	uPD858 uPD858C	307-095-9-004	
TR1	2SC945AP 2SC945(1)	176-060-9-003	
TR2	2SA733P 2SA733(1)	177-020-9-001	
TR3	2SC945AP 2SC945(1)	176-060-9-003	

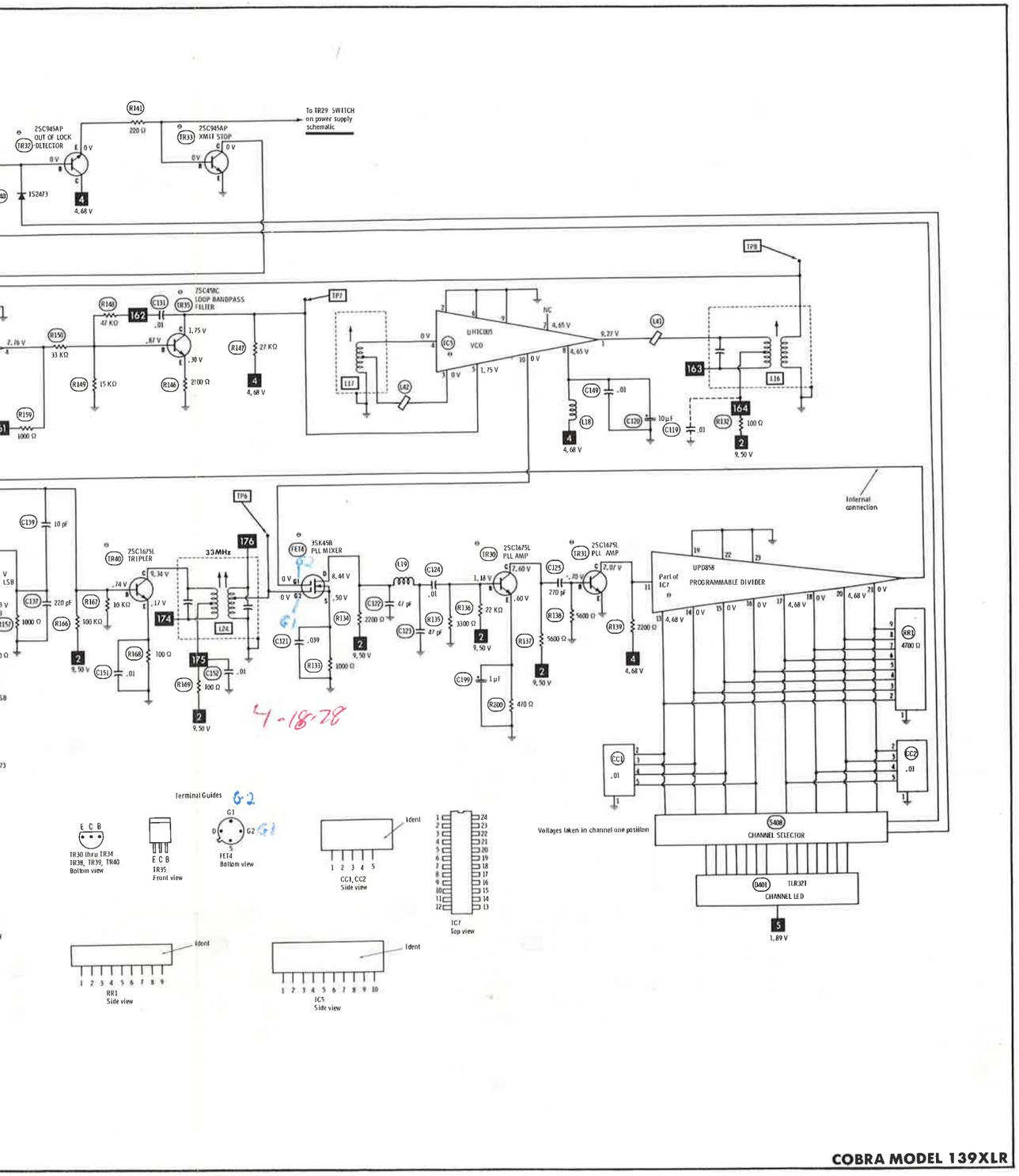

PARTS LIST AND DESCRIPTION

(When ordering parts, state Model, Part Number, and Description.)

SEMICONDUCTORS (Select replacement transistor for best results)

ITEM No.	TYPE No.	MFGR. PART No.	REPLACEMENT DATA: GENERAL ELECTRIC PART No.	IR WORKMAN PART No.	MALLORY PART No.	MOTOROLA PART No.	RAYTHEON PART No.	RCA PART No.	SPRAGUE PART No.	SYLVANIA PART No.
D1	1S2473	151-035-9-001	GE-300	D200	PTC214	HEPR0602	RE 52	SK3100	RT-218	ECG519
D2	1S2473	151-035-9-001	GE-300	D200	PTC214	HEPR0602	RE 52	SK3100	RT-218	ECG519
D3	1S2473	151-035-9-001	GE-300	D200	PTC214	HEPR0602	RE 52	SK3100	RT-218	ECG519
D4	1S2473	151-035-9-001	GE-300	D200	PTC214	HEPR0602	RE 52	SK3100	RT-218	ECG519
D5	1S2473	151-035-9-001	GE-300	D200	PTC214	HEPR0602	RE 52	SK3100	RT-218	ECG519
D6	1S2473	151-035-9-001	GE-300	D200	PTC214	HEPR0602	RE 52	SK3100	RT-218	ECG519
D7	1S2473	151-035-9-001	GE-300	D200	PTC214	HEPR0602	RE 52	SK3100	RT-218	ECG519
D8	1S2473	151-035-9-001	GE-300	D200	PTC214	HEPR0602	RE 52	SK3100	RT-218	ECG519
D9	1S2473	151-035-9-001	GE-300	D200	PTC214	HEPR0602	RE 52	SK3100	RT-218	ECG519
D10	1N60P	150-006-9-001	1N60	1N60	PTC206	HEPR9135	RE 47	SK3088	RT-263	ECG109
D11	1N60P	150-006-9-001	1N60	1N60	PTC206	HEPR9135	RE 47	SK3088	RT-263	ECG109
D12	1S2473	151-035-9-001	GE-300	D200	PTC214	HEPR0602	RE 52	SK3100	RT-218	ECG519
D13	1S2473	151-035-9-001	GE-300	D200	PTC214	HEPR0602	RE 52	SK3100	RT-218	ECG519
D14	1S2473	151-035-9-001	GE-300	D200	PTC214	HEPR0602	RE 52	SK3100	RT-218	ECG519
D15	1N60P	150-006-9-001	1N60	1N60	PTC206	HEPR9135	RE 47	SK3088	RT-263	ECG109
D16	1N60P	150-006-9-001	1N60	1N60	PTC206	HEPR9135	RE 47	SK3088	RT-263	ECG109
D17	1S2473	151-035-9-001	GE-300	D200	PTC214	HEPR0602	RE 52	SK3100	RT-218	ECG519
D18	1S2473	151-035-9-001	GE-300	D200	PTC214	HEPR0602	RE 52	SK3100	RT-218	ECG519
D19	1S2473	151-035-9-001	GE-300	D200	PTC214	HEPR0602	RE 52	SK3100	RT-218	ECG519
D20	1S2473	151-035-9-001	GE-300	D200	PTC214	HEPR0602	RE 52	SK3100	RT-218	ECG519
D21	1S2473	151-035-9-001	GE-300	D200	PTC214	HEPR0602	RE 52	SK3100	RT-218	ECG519
D22	1S2473	151-035-9-001	GE-300	D200	PTC214	HEPR0602	RE 52	SK3100	RT-218	ECG519
D23	1S2473	151-035-9-001	GE-300	D200	PTC214	HEPR0602	RE 52	SK3100	RT-218	ECG519
D24	CZ092	152-051-9-001	GEZD-9.1	Z1209	ZB9.1A	HEPZ0412	RE 114	SK3060	RT-240	ECG139
D25	BZ075	152-079-9-004	GEZD-7.5		ZB7.5B		RE 111		RT-239	ECG138
D26	WZ050	152-069-9-001	GEZD-5.1						RT-235	
D27	SR1K2	151-045-9-001	GE-504A	5A4D	PTC201	HEPR0052	RE 49	SK3030	RT-213	ECG116
D28	CZ092	152-051-9-001	GEZD-9.1	Z1209	ZB9.1A	HEPZ0412	RE 114	SK3060	RT-240	ECG139
D29	1S2473	151-035-9-001	GE-300	D200	PTC214	HEPR0602	RE 52	SK3100	RT-218	ECG519
D30	1S2473	151-035-9-001	GE-300	D200	PTC214	HEPR0602	RE 52	SK3100	RT-218	ECG519
D31	WZ061	152-052-9-002	GEZD-6.2		ZB6.2B		RE 109		RT-237	ECG137
D32	WZ061	152-052-9-002	GEZD-6.2		ZB6.2B		RE 109		RT-237	ECG137
D33	1S2473	151-035-9-001	GE-300	D200	PTC214	HEPR0602	RE 52	SK3100	RT-218	ECG519
D34	1S2473	151-035-9-001	GE-300	D200	PTC214	HEPR0602	RE 52	SK3100	RT-218	ECG519
D35	1S2473	151-035-9-001	GE-300	D200	PTC214	HEPR0602	RE 52	SK3100	RT-218	ECG519
D36	1S2473	151-035-9-001	GE-300	D200	PTC214	HEPR0602	RE 52	SK3100	RT-218	ECG519
D37	1S2473	151-035-9-001	GE-300	D200	PTC214	HEPR0602	RE 52	SK3100	RT-218	ECG519
D38	1S2473	151-035-9-001	GE-300	D200	PTC214	HEPR0602	RE 52	SK3100	RT-218	ECG519
D39	1S2473	151-035-9-001	GE-300	D200	PTC214	HEPR0602	RE 52	SK3100	RT-218	ECG519
D40	1S2473	151-035-9-001	GE-300	D200	PTC214	HEPR0602	RE 52	SK3100	RT-218	ECG519
D41	1S2687D	153-008-9-001	GE-90	D201		HEPR2503	RE 195	SK3126	RT-262	
D43	1S2687D	153-008-9-001	GE-90	D201		HEPR2503	RE 195	SK3126	RT-262	
D44	CZ092	152-051-9-001	GEZD-9.1	Z1209	ZB9.1A	HEPZ0412	RE 114	SK3060	RT-240	ECG139
D45	1S2687D	153-008-9-001	GE-90	D201		HEPR2503	RE 195	SK3126	RT-262	
D46	1S2473	151-035-9-001	GE-300	D200	PTC214	HEPR0602	RE 52	SK3100	RT-218	ECG519
D47	1S2473	151-035-9-001	GE-300	D200	PTC214	HEPR0602	RE 52	SK3100	RT-218	ECG519
D48	1N60P	150-006-9-001	1N60	1N60	PTC206	HEPR9135	RE 47	SK3088	RT-263	ECG109
D49	1N60P	150-006-9-001	1N60	1N60	PTC206	HEPR9135	RE 47	SK3088	RT-263	ECG109
D50	1N60P	150-006-9-001	1N60	1N60	PTC206	HEPR9135	RE 47	SK3088	RT-263	ECG109
D51	KB162W	153-008-9-002			PTC301					
D52	KB162W	153-008-9-002			PTC301					
D53	1S2473	151-035-9-001	GE-300	D200	PTC214	HEPR0602	RE 52	SK3100	RT-218	ECG519
D54	SR1K2	151-045-9-001	GE-504A	5A4D	PTC201	HEPR0052	RE 49	SK3030	RT-213	ECG116
D55	1N60P	150-006-9-001	1N60	1N60	PTC206	HEPR9135	RE 47	SK3088	RT-263	ECG109
D56	1S2473	151-035-9-001	GE-300	D200	PTC214	HEPR0602	RE 52	SK3100	RT-218	ECG519
D57	1S2473	151-035-9-001	GE-300	D200	PTC214	HEPR0602	RE 52	SK3100	RT-218	ECG519
D58	1S2473	151-035-9-001	GE-300	D200	PTC214	HEPR0602	RE 52	SK3100	RT-218	ECG519
D59	1N60P	151-006-9-001	1N60	1N60	PTC206	HEPR9135	RE 47	SK3088	RT-263	ECG109
D61	1S2473	151-035-9-001	GE-300	D200	PTC214	HEPR0602	RE 52	SK3100	RT-218	ECG519
D301	WZ061	152-052-9-002	GEZD-6.2		ZB6.2B		RE 109		RT-237	ECG137
D302	BZ162	152-057-9-001	GEZD-16		ZB16B		RE 122		RT-246	ECG5075
D406	S5VB	151-065-9-001								
FET1	3SK45B	182-038-9-001	GE-FET-4	WEP905	PTC181	HEPF2004	RE 199	SK3050	RT-181	ECG222
	3SK45(1)		GE-FET-4	WEP905	PTC181	HEPF2004	RE 199	SK3050	RT-181	ECG222
FET2	JF1033G		GE-FET-2	FE-100	PTC161	HEPF0021	RE 45	SK3116	RT-175	ECG312
	JF1033	182-044-9-002 (1)	GE-FET-2	FE-100	PTC161	HEPF0021	RE 45	SK3116	RT-175	ECG312
FET3	2SK68M	182-046-9-001	GE-FET-1	FE-100	PTC151	HEPF0010	RE 46	SK3112	RT-176	ECG133
	2SK68A	182-046-9-001 (1)	GE-FET-1	FE-100	PTC151	HEPF0010	RE 46	SK3112	RT-176	ECG133
	2SK68(1)		GE-FET-1	FE-100	PTC151	HEPF0010	RE 46	SK3112	RT-176	ECG133
FET4	3SK45		GE-FET-4	WEP905	PTC181	HEPF2004	RE 199	SK3050	RT-181	ECG222
	3SK45B	182-038-9-001 (1)	GE-FET-4	WEP905	PTC181	HEPF2004	RE 199	SK3050	RT-181	ECG222
FET5	2SK68A-M	182-046-9-001	GE-FET-1	FE-100	PTC151	HEPF0010	RE 46	SK3112	RT-176	ECG133
	2SK68(1)		GE-FET-1	FE-100	PTC151	HEPF0010	RE 46	SK3112	RT-176	ECG133
FET6	JF1033G		GE-FET-2	FE-100	PTC161	HEPF0021	RE 45	SK3116	RT-175	ECG312
	JF1033	182-044-9-002 (1)	GE-FET-2	FE-100	PTC161	HEPF0021	RE 45	SK3116	RT-175	ECG312
FET7	3SK45B	182-038-9-001	GE-FET-4	WEP905	PTC181	HEPF2004	RE 199	SK3050	RT-181	ECG222
	3SK45(1)		GE-FET-4	WEP905	PTC181	HEPF2004	RE 199	SK3050	RT-181	ECG222
IC1	uPC577H	307-112-9-007	GEIC-140	WEP939			RE 341-M			ECG1082
IC2	MC1946A	307-112-9-005								
IC3	uPC592H2									
	uPC592Hz	307-113-9-004 (1)								
IC4	uPC1156H	307-112-9-001								
IC5	uHIC-005									
	uHID-005	307-112-9-002 (1)								
IC6	uPC78L05	307-112-9-003								ECG977
	78L05(1)									ECG977
IC7	uPD858									
	uPD858C	307-095-9-004								
TR1	2SC945AP	176-060-9-003	GE-212	(IR)2SC945	PTC121 *	HEPS0015 *	RE 192	SK3124	RT-107A	ECG199
	2SC945(1)		GE-212	(IR)2SC945	PTC121 *	HEPS0015 *	RE 192	SK3124	RT-107A	ECG199
TR2	2SA733P	177-020-9-001	GE-65	TR-31	PTC103 *	HEPS5022 *	RE 26 *	SK3025 *	RT-303	ECG159 *
	2SA733(1)		GE-65	TR-31	PTC103 *	HEPS5022 *	RE 26 *	SK3025 *	RT-303	ECG159 *
TR3	2SC945AP	176-060-9-003	GE-212	(IR)2SC945	PTC121 *	HEPS0015 *	RE 192	SK3124	RT-107A	ECG199
	2SC945(1)		GE-212	(IR)2SC945	PTC121 *	HEPS0015 *	RE 192	SK3124	RT-107A	ECG199

PARTS LIST AND DESCRIPTION (CONTINUED)

(When ordering parts, state Model, Part Number, and Description.)

SEMICONDUCTORS (Select replacement transistor for best results) (cont)

ITEM No.	TYPE No.	MFGR. PART No.	REPLACEMENT DATA							
			GENERAL ELECTRIC PART No.	IR WORKMAN PART No.	MALLORY PART No.	MOTOROLA PART No.	RAYTHEON PART No.	RCA PART No.	SPRAGUE PART No.	SYLVANIA PART No.
TR4	2SC945AP	176-060-9-003	GE-212	(IR)2SC945	PTC121 *	HEPS0015 *	RE 192	SK3124	RT-107A	ECG199
	2SC945(1)		GE-212	(IR)2SC945	PTC121 *	HEPS0015 *	RE 192	SK3124	RT-107A	ECG199
TR5	2SC1730L	176-073-9-001	GE-17	TR-24	PTC136	HEPS0025	RE 9	SK3018	RT-107	ECG107
	2SC1730 (1)		GE-17	TR-24	PTC136	HEPS0025	RE 9	SK3018	RT-107	ECG107
TR6	2SC839H		GE-61 *	(IR)2SC644	PTC132 *	HEPS0015 *	RE 13 *	SK3018 *	RT-308	ECG123A *
	2SC1675L	176-065-9-001 (1)	GE-213	TR-33	PTC139 *	HEPS0025 *	RE 13 *	SK3124	RT-308	ECG229 *
	2SC1675 (1)		GE-213	TR-33	PTC139 *	HEPS0025 *	RE 13 *	SK3124	RT-308	ECG229 *
TR7	2SC839H		GE-61 *	(IR)2SC644	PTC132 *	HEPS0015 *	RE 13 *	SK3018 *	RT-308	ECG123A *
	2SC1675L	176-065-9-001 (1)	GE-213	TR-33	PTC139 *	HEPS0025 *	RE 13 *	SK3124	RT-308	ECG229 *
	2SC1675		GE-213	TR-33	PTC139 *	HEPS0025 *	RE 13 *	SK3124	RT-308	ECG229 *
TR8	2SC839H		GE-61 *	(IR)2SC644	PTC132 *	HEPS0015 *	RE 13 *	SK3018 *	RT-308	ECG123A *
	2SC1675L	176-065-9-001 (1)	GE-213	TR-33	PTC139 *	HEPS0025 *	RE 13 *	SK3124	RT-308	ECG229 *
	2SC1675 (1)		GE-213	TR-33	PTC139 *	HEPS0025 *	RE 13 *	SK3124	RT-308	ECG229 *
TR9	2SC1675L	176-065-9-001	GE-213	TR-33	PTC139 *	HEPS0025 *	RE 13 *	SK3124	RT-308	ECG229 *
	2SC1675 (1)		GE-213	TR-33	PTC139 *	HEPS0025 *	RE 13 *	SK3124	RT-308	ECG229 *
TR10	2SC1675L	176-065-9-001	GE-213	TR-33	PTC139 *	HEPS0025 *	RE 13 *	SK3124	RT-308	ECG229 *
	2SC1675 (1)		GE-213	TR-33	PTC139 *	HEPS0025 *	RE 13 *	SK3124	RT-308	ECG229 *
TR11	2SC945AP	176-060-9-003	GE-212	(IR)2SC945	PTC121 *	HEPS0015 *	RE 192	SK3124	RT-107A	ECG199
	2SC945(1)		GE-212	(IR)2SC945	PTC121 *	HEPS0015 *	RE 192	SK3124	RT-107A	ECG199
TR12	2SC945AP	176-060-9-003	GE-212	(IR)2SC945	PTC121 *	HEPS0015 *	RE 192	SK3124	RT-107A	ECG199
	2SC945(1)		GE-212	(IR)2SC945	PTC121 *	HEPS0015 *	RE 192	SK3124	RT-107A	ECG199
TR13	2SC945AP	176-060-9-003	GE-212	(IR)2SC945	PTC121 *	HEPS0015 *	RE 192	SK3124	RT-107A	ECG199
	2SC945(1)		GE-212	(IR)2SC945	PTC121 *	HEPS0015 *	RE 192	SK3124	RT-107A	ECG199
TR14	2SC945AP	176-060-9-003	GE-212	(IR)2SC945	PTC121 *	HEPS0015 *	RE 192	SK3124	RT-107A	ECG199
	2SC945(1)		GE-212	(IR)2SC945	PTC121 *	HEPS0015 *	RE 192	SK3124	RT-107A	ECG199
TR15	2SC945AP	176-060-9-003	GE-212	(IR)2SC945	PTC121 *	HEPS0015 *	RE 192	SK3124	RT-107A	ECG199
	2SC945(1)		GE-212	(IR)2SC945	PTC121 *	HEPS0015 *	RE 192	SK3124	RT-107A	ECG199
TR16	2SC945AP	176-060-9-003	GE-212	(IR)2SC945	PTC121 *	HEPS0015 *	RE 192	SK3124	RT-107A	ECG199
	2SC745(1)		GE-212	(IR)2SC945	PTC121 *	HEPS0015 *	RE 192	SK3124	RT-107A	ECG199
TR17	2SA733P	177-020-9-001	GE-65	TR-31	PTC103 *	HEPS5022 *	RE 26 *	SK3025 *	RT-303	ECG159 *
	2SA733(1)		GE-65	TR-31	PTC103 *	HEPS5022 *	RE 26 *	SK3025 *	RT-303	ECG159 *
TR18	2SC945AP	176-060-9-003	GE-212	(IR)2SC945	PTC121 *	HEPS0015 *	RE 192	SK3124	RT-107A	ECG199
	2SC945(1)		GE-212	(IR)2SC945	PTC121 *	HEPS0015 *	RE 192	SK3124	RT-107A	ECG199
TR19	2SA733P	177-020-9-001	GE-65	TR-31	PTC103 *	HEPS5022 *	RE 26 *	SK3025 *	RT-303	ECG159 *
	2SA733(1)		GE-65	TR-31	PTC103 *	HEPS5022 *	RE 26 *	SK3025 *	RT-303	ECG159 *
TR20	2SC945AP	176-060-9-003	GE-212	(IR)2SC945	PTC121 *	HEPS0015 *	RE 192	SK3124	RT-107A	ECG199
	2SC945(1)		GE-212	(IR)2SC945	PTC121 *	HEPS0015 *	RE 192	SK3124	RT-107A	ECG199
TR21	2SC945AP	176-060-9-003	GE-212	(IR)2SC945	PTC121 *	HEPS0015 *	RE 192	SK3124	RT-107A	ECG199
	2SC945(1)		GE-212	(IR)2SC945	PTC121 *	HEPS0015 *	RE 192	SK3124	RT-107A	ECG199
TR22	2SC945AP	176-060-9-003	GE-212	(IR)2SC945	PTC121 *	HEPS0015 *	RE 192	SK3124	RT-107A	ECG199
	2SC945(1)		GE-212	(IR)2SC945	PTC121 *	HEPS0015 *	RE 192	SK3124	RT-107A	ECG199
TR23	2SC945AP	176-060-9-003	GE-212	(IR)2SC945	PTC121 *	HEPS0015 *	RE 192	SK3124	RT-107A	ECG199
	2SC945(1)		GE-212	(IR)2SC945	PTC121 *	HEPS0015 *	RE 192	SK3124	RT-107A	ECG199
TR24	2SC1419C	176-055-9-004	GE-66	TR-76	PTC167	HEPS5027	RE 21	SK3054	RT-197	ECG152
	2SC1419 (1)		GE-66	TR-76	PTC167	HEPS5027	RE 21	SK3054	RT-197	ECG152
TR25	2SC1419C	176-055-9-004	GE-66	TR-76	PTC167	HEPS5027	RE 21	SK3054	RT-197	ECG152
	2SC1419 (1)		GE-66	TR-76	PTC167	HEPS5027	RE 21	SK3054	RT-197	ECG152
TR26	2SC945AP	176-060-9-003	GE-212	(IR)2SC945	PTC121 *	HEPS0015 *	RE 192	SK3124	RT-107A	ECG199
	2SC945(1)		GE-212	(IR)2SC945	PTC121 *	HEPS0015 *	RE 192	SK3124	RT-107A	ECG199
TR27	2SC839H		GE-61 *	(IR)2SC644	PTC132 *	HEPS0015 *	RE 13 *	SK3018 *	RT-308	ECG123A *
	2SC1675L	176-065-9-001 (1)	GE-213	TR-33	PTC139 *	HEPS0025 *	RE 13 *	SK3124	RT-308	ECG229 *
	2SC1675 (1)		GE-213	TR-33	PTC139 *	HEPS0025 *	RE 13 *	SK3124	RT-308	ECG229 *
TR28	2SC839H		GE-61 *	(IR)2SC644	PTC132 *	HEPS0015 *	RE 13 *	SK3018 *	RT-308	ECG123A *
	2SC1675L	176-065-9-001 (1)	GE-213	TR-33	PTC139 *	HEPS0025 *	RE 13 *	SK3124	RT-308	ECG229 *
	2SC1675 (1)		GE-213	TR-33	PTC139 *	HEPS0025 *	RE 13 *	SK3124	RT-308	ECG229 *
TR29	2SC945AP	176-060-9-003	GE-212	(IR)2SC945	PTC121 *	HEPS0015 *	RE 192	SK3124	RT-107A	ECG199
	2SC945(1)		GE-212	(IR)2SC945	PTC121 *	HEPS0015 *	RE 192	SK3124	RT-107A	ECG199
TR30	2SC1675L	176-065-9-001	GE-213	TR-33	PTC139 *	HEPS0025 *	RE 13 *	SK3124	RT-308	ECG229 *
	2SC1675 (1)		GE-213	TR-33	PTC139 *	HEPS0025 *	RE 13 *	SK3124	RT-308	ECG229 *
TR31	2SC1675L	176-065-9-001	GE-213	TR-33	PTC139 *	HEPS0025 *	RE 13 *	SK3124	RT-308	ECG229 *
	2SC1675 (1)		GE-213	TR-33	PTC139 *	HEPS0025 *	RE 13 *	SK3124	RT-308	ECG229 *
TR32	2SC945AP	176-060-9-003	GE-212	(IR)2SC945	PTC121 *	HEPS0015 *	RE 192	SK3124	RT-107A	ECG199
	2SC945(1)		GE-212	(IR)2SC945	PTC121 *	HEPS0015 *	RE 192	SK3124	RT-107A	ECG199
TR33	2SC945AP	176-060-9-003	GE-212	(IR)2SC945	PTC121 *	HEPS0015 *	RE 192	SK3124	RT-107A	ECG199
	2SC945(1)		GE-212	(IR)2SC945	PTC121 *	HEPS0015 *	RE 192	SK3124	RT-107A	ECG199
TR34	2SC1675L	176-065-9-001	GE-213	TR-33	PTC139 *	HEPS0025 *	RE 13 *	SK3124	RT-308	ECG229 *
	2SC1675 (1)		GE-213	TR-33	PTC139 *	HEPS0025 *	RE 13 *	SK3124	RT-308	ECG229 *
TR35	2SC458C	176-043-9-002	GE-210 *	(IR)2SC458B	PTC121 *	HEPS0009 *	RE 13 *	SK3124	RT-187	ECG123A *
	2SC458(1)		GE-210 *	(IR)2SC458B	PTC121 *	HEPS0009 *	RE 13 *	SK3124	RT-187	ECG123A *
TR36	2SC1419C	176-055-9-004	GE-66	TR-76	PTC167	HEPS5027	RE 21	SK3054	RT-197	ECG152
	2SC1419 (1)		GE-66	TR-76	PTC167	HEPS5027	RE 21	SK3054	RT-197	ECG152
TR37	2SA719Q		GE-21 *	TR-28 *	PTC103 *	HEPS0012 *	RE 26 *	SK3114	RT-305	ECG290
	2SA719P	177-024-9-001 (1)	GE-21 *	TR-28 *	PTC103 *	HEPS0012 *	RE 26 *	SK3114	RT-305	ECG290
	2SA719(1)		GE-21 *	TR-28 *	PTC103 *	HEPS0012 *	RE 26 *	SK3114	RT-305	ECG290
TR38	2SC1675L	176-065-9-001	GE-213	TR-33	PTC139 *	HEPS0025 *	RE 13 *	SK3124	RT-308	ECG229 *
	2SC1675 (1)		GE-213	TR-33	PTC139 *	HEPS0025 *	RE 13 *	SK3124	RT-308	ECG229 *
TR39	2SC839H		GE-61 *	(IR)2SC644	PTC132 *	HEPS0015 *	RE 13 *	SK3018 *	RT-308	ECG123A *
	2SC1675L	176-065-9-001 (1)	GE-213	TR-33	PTC139 *	HEPS0025 *	RE 13 *	SK3124	RT-308	ECG229 *
	2SC1675 (1)		GE-213	TR-33	PTC139 *	HEPS0025 *	RE 13 *	SK3124	RT-308	ECG229 *

PARTS LIST AND DESCRIPTION (CONTINUED)

(When ordering parts, state Model, Part Number, and Description.)

SEMICONDUCTORS (Select replacement transistor for best results) (cont)

ITEM No.	TYPE No.	MFGR. PART No.	REPLACEMENT DATA							
			GENERAL ELECTRIC PART No.	IR WORKMAN PART No.	MALLORY PART No.	MOTOROLA PART No.	RAYTHEON PART No.	RCA PART No.	SPRAGUE PART No.	SYLVANIA PART No.
TR40	2SC1675L	176-065-9-001	GE-213	TR-33	PTC139 *	HEPS0025 *	RE 13 *	SK3124	RT-308	ECG229 *
	2SC1675 (1)		GE-213	TR-33	PTC139 *	HEPS0025 *	RE 13 *	SK3124	RT-308	ECG229 *
TR41	2SC945AP	176-060-9-003	GE-212	(IR)2SC945	PTC121 *	HEPS0015 *	RE 192	SK3124	RT-107A	ECG199
	2SC945(1)		GE-212	(IR)2SC945	PTC121 *	HEPS0015 *	RE 192	SK3124	RT-107A	ECG199
TR42	2SC945AP	176-060-9-003	GE-212	(IR)2SC945	PTC121 *	HEPS0015 *	RE 192	SK3124	RT-107A	ECG199
	2SC945(1)		GE-212	(IR)2SC945	PTC121 *	HEPS0015 *	RE 192	SK3124	RT-107A	ECG199
TR43	2SC1307-1	176-073-9-002	GE-216	WEP1307	PTC186		RE 201	SK3197	RT-158	ECG236
	2SC1307 (11)(1)		GE-216	WEP1307	PTC186		RE 201	SK3197	RT-158	ECG236
TR44	2SC1306	176-024-9-002	GE-215	WEP1306	PTC186		RE 203	SK3197	RT-146	ECG235
TR45	2SC1973		GE-335	WEP922						ECG315
TR301	2SC945AP	176-060-9-003	GE-212	(IR)2SC945	PTC121 *	HEPS0015 *	RE 192	SK3124	RT-107A	ECG199
	2SC945(1)		GE-212	(IR)2SC945	PTC121 *	HEPS0015 *	RE 192	SK3124	RT-107A	ECG199
TR302	2SC1419C	176-055-9-004	GE-66	TR-76	PTC167	HEPS5027	RE 21	SK3054	RT-197	ECG152
	2SC1419 (1)		GE-66	TR-76	PTC167	HEPS5027	RE 21	SK3054	RT-197	ECG152
TR401	2SD188		GE-14	TR-59	PTC140	HEPS7004	RE 19	SK3027	RT-131	ECG130
	2SD188M	176-040-9-001 (1)	GE-14	TR-59	PTC140	HEPS7004	RE 19	SK3027	RT-131	ECG130

* Lead Configuration may vary from original.
(1) Used in some versions.
(11) Rating 25 Watts @ 8 Amps.

ELECTROLYTIC CAPACITORS

ITEM No.	RATING	REPLACEMENT DATA				
		MFGR. PART No.	CORNELL-DUBILIER PART No.	MALLORY PART No.	SPRAGUE PART No.	
					Q-LINE	GENERAL LINE
C14	33 10V	022-154-9-002	PC30-25	VTT33B10	QV1-61	EV-1125
C35	1 50V	022-144-9-001	PC1-50	VTT1A50	QV1-11	EV-1615
C39	.1 16V	033-027-9-001		TDC104M050EL	QDT1-2	SD50-R109
C42	10 16V	022-142-9-001	PC10-25	VTT10B25	QV1-41	EV-1222
C43	10 16V	022-142-9-001	PC10-25	VTT10B25	QV1-41	EV-1222
C44	4.7 25V	022-122-9-001	PC5-50	VTT4R7B50	QV1-27	EV-1319
C47	47 10V	028-120-9-002	PC50-16	VTT47D16	QV1-73	EV-1226
C49	47 10V	028-120-9-002	PC50-16	VTT47D16	QV1-73	EV-1226
C50	47 10V	028-120-9-002	PC50-16	VTT47D16	QV1-73	EV-1226
C52	.1 16V	033-027-9-001		TDC104M050EL	QDT1-2	SD50-R109
C55	2.2 25V	022-154-9-001	PC2-100	VTT2R2A50	QV1-19	EV-1517
C58	1 50V	022-144-9-001	PC1-50	VTT1A50	QV1-11	EV-1615
C59	47 10V	028-120-9-002	PC50-16	VTT47D16	QV1-73	EV-1226
C60	.1 16V	033-027-9-001		TDC104M050EL	QDT1-2	SD50-R109
C63	10 16V	022-142-9-001	PC10-25	VTT10B25	QV1-41	EV-1222
C66	47 10V	028-120-9-002	PC50-16	VTT47D16	QV1-73	EV-1226
C67	4.7 25V	022-122-9-001	PC5-50	VTT4R7B50	QV1-27	EV-1319
C68	4.7 25V	022-122-9-001	PC5-50	VTT4R7B50	QV1-27	EV-1319
C69	10 16V	022-142-9-001	PC10-25	VTT10B25	QV1-41	EV-1222
C76	47 10V	028-920-9-002	PC50-16	VTT47D16	QV1-73	EV-1226
C77	.47 50V	022-122-9-016	PC1-50	VTTR47A63	QV1-3	EV-1610
C78	.47 50V	022-122-9-016	PC1-50	VTTR47A63	QV1-3	EV-1610
C79	.47 50V	022-122-9-016	PC1-50	VTTR47A63	QV1-3	EV-1610
C81	220 16V	022-122-9-008	PC250-25	VTT220H16	QV1-117	EV-1240
C84	1 50V	022-144-9-001	PC1-50	VTT1A50	QV1-11	EV-1615
C87	10 16V	022-142-9-001	PC10-25	VTT10B25	QV1-41	EV-1222
C88	4.7 25V	022-122-9-001	PC5-50	VTT4R7B50	QV1-27	EV-1319
C89	33 16V	022-144-9-005	PC30-25	VTT33D25	QV1-63	EV-1325
C92	33 16V	022-144-9-005	PC30-25	VTT33D25	QV1-63	EV-1325
C94	1000 16V	002-154-9-007	PC1000-16	VTT1000L16	QV1-183	EV-1260
C95	470 16V	022-154-9-006	PC500-16	VTT470K16	QV1-151	EV-1250
C97	4.7 25V	022-122-9-001	PC5-50	VTT4R7B50	QV1-27	EV-1319
C99	10 16V	022-142-9-001	PC10-25	VTT10B25	QV1-41	EV-1222
C101	100 10V	022-099-9-004	PC100-10	VTT100E10	QV1-93	EV-1130
C102	220 10V	022-154-9-003	PC250-10	VTT220F10	QV1-115	EV-1140
C103	470 10V	022-154-9-005	PC500-16	VTT470K16	QV1-149	EV-1150
C104	330 10V	022-154-9-004	WBR300-35	VTT330G10	QV1-131	EV-1145
C107	1000 16V	022-154-9-007	PC1000-16	VTT1000L16	QV1-183	EV-1260
C110	.1 16V	033-027-9-001		TDC104M050EL	QDT1-2	SD50-R109
C120	10 16V	022-142-9-001	PC10-25	VTT10B25	QV1-41	EV-1222
C126	1 50V	022-144-9-001	PC1-50	VTT1A50	QV1-11	EV-1615
C135	220 10V	022-154-9-003	PC250-10	VTT220F10	QV1-115	EV-1140
C140	10 6.3V			TDC106M025FL	QDT1-64	SD25-109
C141	10 6.3V			TDC106M025FL	QDT1-64	SD25-109
C158	1 50V	022-144-9-001	PC1-50	VTT1A50	QV1-11	EV-1615
C179	2.2 6.3V			TDC225M035FL		SD35-2R29
C181	47 10V	028-120-9-002	PC50-16	VTT47D16	QV1-73	EV-1226
C199	1 50V	022-144-9-001	PC1-50	VTT1A50	QV1-11	EV-1615
C211	2.2 25V	022-154-9-001	PC2-100	VTT2R2A50	QV1-19	EV-1517
C218	4.7 25V	022-122-9-003	PC5-50	VTT4R7B50	QV1-27	EV-1319
C224	1 50V	022-144-9-001	PC1-50	VTT1A50	QV1-11	EV-1615
C226	1 50V	022-144-9-001	PC1-50	VTT1A50	QV1-11	EV-1615
C302	220 16V	022-122-9-008	PC250-25	VTT220H16	QV1-117	EV-1240
C304	3300 25V	022-154-9-008	WBR3000-35	TC2530		
C402	220 10V	022-154-9-003	PC200-10	VTT220F10	QE1-477	TVA-1130.6

CAPACITORS

ITEM No.	RATING	MFGR. PART No.	REPLACEMENT DATA				
			CENTRALAB PART No.	CORNELL-DUBILIER PART No.	MALLORY PART No.	SPRAGUE PART No.	
						Q-LINE	GENERAL LINE
C1	39 NPO 5%				CN0439		10TCC-Q39
C2	.01 10%		UK16-103		MAG1611		HY-420
C4	.01 10%		UK16-103		MAG1611		HY-420
C5	.01 10%		UK16-103		MAG1611		HY-420

PARTS LIST AND DESCRIPTION (CONTINUED)

(When ordering parts, state Model, Part Number, and Description.)

CAPACITORS (cont)

ITEM No.	RATING	MFGR. PART No.	REPLACEMENT DATA				
			CENTRALAB PART No.	CORNELL-DUBILIER PART No.	MALLORY PART No.	SPRAGUE PART No.	
						Q-LINE	GENERAL LINE
C6	.01 10%		UK16-103		MAG1611		HY-420
C7	.001 10%		DD-102G	GP1000	GP210	QC2-81	5GA-D10
C8	100 10%		DTZ-100	NP0100	CN0310		10TCC-T10
C9	.001 10%		DD-102G	GP1000	GP210	QC2-81	5GA-D10
C10	.0047 10%		DD-472	GP4700	GP247		5GA-D47
C11	.0047 10%		DD-472	GP4700	GP247		5GA-D47
C12	.0047 10%		DD-472	GP4700	GP247		5GA-D47
C13	.0047 10%		DD-472	GP4700	GP247		5GA-D47
C15	.01 10%		UK16-103		MAG1611		HY-420
C16	.01 10%		UK16-103		MAG1611		HY-420
C17	.01 50V 10%			WMF1S1	EWF1A110	QF1-91	1PB-S10
C18	.039 50V 10%				M192P3939R8		192P3939R8
C19	.022		UK16-223				HY-625
C20	.022		UK16-223				HY-625
C21	.022		UK16-223				HY-625
C22	.022		UK16-223				HY-625
C23	.022 50V 10%				M192P2239R8		192P2239R8
C24	56 NPO 5%				CN0456		10TCC-Q56
	.001	(1)	DD-102G	GP1000	GP210	QC2-81	5GA-D10
C25	.039 50V 10%				M192P3939R8		192P3939R8
C26	.039 50V 10%				M192P3939R8		192P3939R8
C27	.039 50V 10%				M192P3939R8		192P3939R8
C28	.022		UK16-223				HY-625
C29	.039 50V 10%				M192P3939R8		192P3939R8
C30	.039 50V 10%				M192P3939R8		192P3939R8
C31	.039 50V 10%				M192P3939R8		192P3939R8
C32	5 NPO		DTZ-4R7	NP04P7	CN0547		10TCC-V47
C33	.022		UK16-223				HY-625
C34	.022		UK16-223				HY-625
C36	5 NPO		DTZ-4R7	NP04P7	CN0547		10TCC-V47
C37	10 NPO		DTZ-10	NP010	CN0410		10TCC-Q10
C38	330		DD-331	GP330	GP333		10TS-T33
C40	.039 50V 10%				M192P3939R8		192P3939R8
C41	.022		UK16-223				HY-625
C45	47 NPO 5%		DTZ-47	NP047	CN0447		10TCC-Q47
C46	.01 10%		UK16-103		MAG1611		HY-420
C51	.022 50V 10%				M192P2239R8		192P2239R8
C53	.01 10%		UK16-103		MAG1611		HY-420
C54	33		DTZ-33	NP033	CN0433		10TCC-Q33
C57	.022		UK16-223				HY-625
C61	.047			DPMS2S47	EWF1A147	QF1-171	1PB-S47
C62	.047			DPMS2S47	EWF1A147	QF1-171	1PB-S47
C64	.039 10%				M192P3939R8		192P3939R8
C71	.068 10%			WMF1S68	EWF1A168	QF1-195	1PB-S68
C72	.022 10%				M192P2239R8		192P2239R8
C73	.1 10%			WMF05P1	EWF05010		431P1049R5
C74	.022 10%				M192P2239R8		192P2239R8
C75	.1 10%			WMF05P1	EWF05010		431P1049R5
C80	.01 10%			WMF1S1	EWF1A110	QF1-91	1PB-S10
C82	.047			DPMS2S47	EWF1A147	QF1-171	1PB-S47
C83	.01 10%			WMF1S1	EWF1A110	QF1-91	1PB-S10
C85	.039 10%				M192P3939R8		192P3939R8
C86	.022 10%				M192P2239R8		192P2239R8
C90	22 NPO 5%		DTZ-22	NP022	CN0422		10TCC-Q22
C91	.047 50V 10%			DPMS2S47	EWF1A147	QF1-171	1PB-S47
	.1 10%	(1)		WMF05P1	EWF05010		431P1049R5
C93	68 NPO 5%		DTZ-68	NP068	CN0468		10TCC-Q68
C96	.1 10%			WMF05P1	EWF05010		431P1049R5
	.0047	(1)			M192P4729R8		192P4729R8
C100	.022		UK16-223				HY-625
C105	.022		UK16-223				HY-625
C106	.022		UK16-223				HY-625
C109	.022		UK16-223				HY-625
C111	18 NPO 5%				CN0418		10TCC-Q18
C112	18 NPO 5%				CN0418		10TCC-Q18
C113	.001 10%		DD-102G	GP1000	GP210	QC2-81	5GA-D10
C114	.001 10%		DD-102G	GP1000	GP210	QC2-81	5GA-D10
C115	100 NPO 10%		DTZ-100	NP0100	CN0310		10TCC-T10
C116	10 NPO		DTZ-10	NP010	CN0410		10TCC-Q10
C117	1.5 NPO		DTZ-1R5	NP01P5	CN0515		10TCC-V15
C118	.022		UK16-223				HY-625
C119	.01		UK16-103		MAG1611		HY-420
C121	.039 10%				M192P3939R8		192P3939R8
C122	47 NPO 5%		DTZ-47	NP047	CN0447		10TCC-Q47
C123	47 NPO 5%		DTZ-47	NP047	CN0447		10TCC-Q47
C124	.01 10%		UK16-103		MAG1611		HY-420
C125	270		DTZ-270				10TCC-T27
C127	470		DD-471	GP470	GP347		10TS-T47
C128	220		DD-221		GP322		10TS-T22
C129	.01 10%		UK16-103		MAG1611		HY-420
C130	10 NPO		DTZ-10	NP010	CN0410		10TCC-Q10
C131	.01 10%		UK16-103		MAG1611		HY-420
C133	.1 10%			WMF05P1	EWF05010		431P1049R5
C134	.1 10%			WMF05P1	EWF05010		431P1049R5
C136	470		DD-471	GP470	GP347		10TS-T47
C137	220		DD-221		GP322		10TS-T22
C139	10 NPO		DTZ-10	NP010	CN0410		10TCC-Q10
C142	68 NPO 5%		DTZ-68	NP068	CN0468		10TCC-Q68
C143	7		DTZ-6R8	NP06P8	CN0568		10TCC-V68
C146	.0022		DD-222		GP222	QC2-97	5GA-D22
C147	470		DD-471	GP470	GP347		10TS-T47
C148	220		DD-221		GP322		10TS-T22
C149	.01 10%		UK16-103		MAG1611		HY-420
C150	10 NPO		DTZ-10	NP010	CN0410		10TCC-Q10
C151	.01 10%		UK16-103		MAG1611		HY-420
C152	.01 10%		UK16-103		MAG1611		HY-420
C153	.047			DPMS2S47	EWF1A147	QF1-171	1PB-S47
C154	10 NPO		DTZ-10	NP010	CN0410		10TCC-Q10
C155	1 NPO				CN0510		10TCC-V10
C156	.022		UK16-223				HY-625
C157	.039 10%				M192P3939R8		192P3939R8

PARTS LIST AND DESCRIPTION (CONTINUED)

(When ordering parts, state Model, Part Number, and Description.)

CAPACITORS (cont)

ITEM No.	RATING	MFGR. PART No.	REPLACEMENT DATA				
			CENTRALAB PART No.	CORNELL-DUBILIER PART No.	MALLORY PART No.	SPRAGUE PART No.	
						Q-LINE	GENERAL LINE
C159	.0047		DD-472	GP4700	GP247		5GA-D47
C160	.0047		DD-472	GP4700	GP247		5GA-D47
C161	.0047		DD-472	GP4700	GP247		5GA-D47
C162	.0047		DD-472	GP4700	GP247		5GA-D47
C163	39 NPO 5%				CN0439		10TCC-Q39
C164	68 NPO 5%		DTZ-68	NP068	CN0468		10TCC-Q68
C165	220 NPO 10%		DD-221		GP322		10TS-T22
C166	.0047 10%		DD-472	GP4700	GP247		5GA-D47
C167	330 N750 10%		DTN-330	N330	CN7333		10TCU-T33
C168	.5 NPO				CN0510		10TCC-V10
C169	.047			DPMS2S47	EWF1A147	QF1-171	1PB-S47
C170	470 N750 10%		DTN-470				10TCU-T47
C172	.0047		DD-472	GP4700	GP247		5GA-D47
C173	180 NPO 10%		DTZ-180				10TCC-T18
C174	56 NPO 5%				CN0456		10TCC-Q56
C175	.1 10%			WMF05P1	EWF05010		431P1049R5
C176	56 NPO 5%				CN0456		10TCC-Q56
C177	.0047 10%		DD-472	GP4700	GP247		5GA-D47
C178	.0047 10%		DD-472	GP4700	GP247		5GA-D47
C183	.0047 10%		DD-472	GP4700	GP247		5GA-D47
C184	120 NPO 10%		DTZ-120		CN0312		10TCC-T12
C185	.0047 10%		DD-472	GP4700	GP247		5GA-D47
C186	.0047 10%		DD-472	GP4700	GP247		5GA-D47
C187	.0047 10%		DD-472	GP4700	GP247		5GA-D47
C188	.0047 10%		DD-472	GP4700	GP247		5GA-D47
C189	.0047 10%		DD-472	GP4700	GP247		5GA-D47
C190	.01 10%		UK16-103		MAG1611		HY-420
C192	.01 10%		UK16-103		MAG1611		HY-420
C193	.022		UK16-223				HY-625
C194	.039 10%				M192P3939R8		192P3939R8
C195	.01 10%		UK16-103		MAG1611		HY-420
C196	.022		UK16-223				HY-625
C197	.022		UK16-223				HY-625
C198	.039 10%				M192P3939R8		192P3939R8
C200	.01 10%			WMF1S1	EWF1A110	QF1-91	1PB-S10
C201	.01 10%			WMF1S1	EWF1A110	QF1-91	1PB-S10
C202	.022		UK16-223				HY-625
C203	.022		UK16-223				HY-625
C204	.01 10%		UK16-103		MAG1611		HY-420
C205	.01 10%		UK16-103		MAG1611		HY-420
C206	.022		UK16-223				HY-625
C207	.01 10%		UK16-103		MAG1611		HY-420
C208	.01 10%		UK16-103		MAG1611		HY-420
C209	.01 10%		UK16-103		MAG1611		HY-420
C210	.01 10%		UK16-103		MAG1611		HY-420
C213	.1		UK12-104		MAG1201		HY-360
C214	.01 10%		UK16-103		MAG1611		HY-420
C215	.022		UK16-223				HY-625
C216	.022		UK16-223				HY-625
C217	.022		UK16-223				HY-625
C219	.022		UK16-223				HY-625
C220	.022		UK16-223				HY-625
C221	.022		UK16-223				HY-625
C222	.1		UK12-104		MAG1201		HY-360
C223	.022		UK16-223				HY-625
C225	.0047		DD-472	GP4700	GP247		5GA-D47
C227	.022		UK16-223				HY-625
C228	.022		UK16-223				HY-625
C231	.047			DPMS2S47	EWF1A147	QF1-171	1PB-S47
C232	180 N220 10%				*		10TCR-T18
C233	.1		UK12-104		MAG1201		HY-360
C236	33 NPO 5%		DTZ-33	NP033	CN0433		10TCC-Q33
C237	.01 10%		UK16-103		MAG1611		HY-420
C238	.022		UK16-223				HY-625
C239	.1		UK12-104		MAG1201		HY-360
C240	.01 10%			WMF1S1	EWF1A110	QF1-91	1PB-S10
C241	.039 10%				M192P3939R8		192P3939R8
C242	47 NPO 5%		DTZ-47	NP047	CN0447		10TCC-Q47
C302	.039 10%				M192P3939R8		192P3939R8
C303	.039 10%				M192P3939R8		192P3939R8
C401	.047 10%			DPMS2S47	EWF1A147	QF1-171	1PB-S47
C403	.01 10%		UK16-103		MAG1611		HY-420
C404	.01		UK16-103		MAG1611		HY-420
C405	.001		DD-102G	GP1000	GP210	QC2-81	5GA-D10
C406	.001		DD-102G	GP1000	GP210	QC2-81	5GA-D10
C407	.001		DD-102G	GP1000	GP210	QC2-81	5GA-D10
C408	.001		DD-102G	GP1000	GP210	QC2-81	5GA-D10
C412	.022		UK16-223				HY-625
C414	.022		UK16-223				HY-625
C415	.001		DD-102G	GP1000	GP210	QC2-81	5GA-D10
C416	.001		DD-102G	GP1000	GP210	QC2-81	5GA-D10
CC1	.01	527-007-9-001 (2)					
CC2	.01	527-007-9-002 (2)					
CT1	Trimmer	028-045-9-001					
CT2	Trimmer	028-045-9-001					
CT3	Trimmer	028-045-9-001					
CT4	Trimmer	028-045-9-001					
CT5	Trimmer	028-045-9-001					
CT6	Trimmer	028-045-9-001					
CT7							

(1) Used in some versions.
(2) Consists of four .01 capacitors.
*Not normally in distributor's stock. Available thru distributor on order to manufacturer.

PARTS LIST AND DESCRIPTION (CONTINUED)

(When ordering parts, state Model, Part Number, and Description.)

CONTROLS (All wattages 1/2 watt, or less, unless listed)

ITEM No.	FUNCTION	RESISTANCE	REPLACEMENT DATA				
			MFGR. PART No.	CENTRALAB PART No.	CLAROSTAT PART No.	MALLORY PART No.	TRW PART No.
RT301	Voltage	300	008-310-9-002	T-300	C-500	MTC32L1	X201R351B
VR1	S Meter	20K					
	S Meter	25K	008-310-9-004 (6)				
VR2	RF Gain Range	100K	008-310-9-006				
VR3	Squelch Range	100K	008-310-9-006				
VR4	Balance	50K	008-310-9-005				
VR5	AM AGC	100K	008-310-9-006				
VR7	AM AMC	5000	008-310-9-001				
VR8	AM Reg	10K	008-310-9-003				
VR9	34.9825MHz	5000	008-310-9-001				
VR12	RF Meter	100K	008-310-9-006				
VR14	MOD	100K	008-310-9-006				
VR15	Bias	300	008-310-9-007				
VR16	Bias	300	008-310-9-007				
VR401	Voice Lock	20K	008-310-9-010 RV-049 (5)	F1-25K (1), SSK012	A47-20K-S (1), KSS-3 or [NP-20K-S (1), UP-C-400]	RU253L,SL36, SL1500 or [UA24L (1),SK750]	BU1 (1),CF62, SS1,DC1
VR402	RF Gain	100K	008-310-9-011				
VR403	SWR CAL	5000	RV-192 (5)				
RV404	Squelch	100K	008-310-9-009	F1-100K (1), SSK012	A47-100K-S (1), KSS-3 or [NP-100K-S (1), UP-C-400]	RU15L,SL36, SL1500 or [UA15L (1),SK750]	BU1 (1),CF13, SS1,DC1
VR405	Volume/Switch	10K	008-310-9-008	F2-10K (1), SSK012,KR1	A47-10K-Z (1), KSS-3,SWE-12 or [NP-10K-Z (1), UP-C-400,NWE-12]	RU14A,SL36, SL1500,US41 or [UA14A (1), SK750,US26]	BU1 (1),CF61, SS1,GC
VR408	Dynamike	20K	008-310-9-010 RV-049 (5)	F1-20K,SSK012	A47-20K-S (1), KSS-3 or [NP-20K-S (1), UP-C-400]	RU253L,SL36, SL1500 or [UA24L (1),SK750]	BU1 (1),CF62, SS1,DC1

(1) Enlarge mounting hole. (5) Number on unit. (6) Alternate part, may be used in some versions.

RESISTORS (Power and Special)

ITEM No.	RATING	REPLACEMENT DATA	
		WORKMAN PART No.	MFGR. PART No.
R107	10 5W	5W-SQ-10	013-016-9-001

ITEM No.	RATING	REPLACEMENT DATA	
		WORKMAN PART No.	MFGR. PART No.
RR1	4700 Ohms		527-077-9-001 (1)

(1) Consists of seven 4700-ohm resistors.

COILS (RF-IF)

ITEM No.	FUNCTION	REPLACEMENT DATA			REMARKS
		PART No.	OTHER IDENTIFICATION	MILLER PART No.	
L1	Noise Blanker (23.5MHz)	060-025-9-001	LA-029		
L2	Noise Blanker (23.5MHz)	060-025-9-005	LA-155		
L3	Rec Antenna (27MHz)	060-025-9-004	LA-152		
L4	Rec RF (27MHz)	060-025-9-006	LA-156		
L5	Rec Mixer (7.8MHz)	060-025-9-009	LA-178		
L6	Rec Mixer (7.8MHz)	060-085-9-010	LA-179		
L7	IF (7.8MHz)				
L8	IF (7.8MHz)	060-025-9-003	LA-096		
L9	RF Choke (470uH)	060-025-9-002	LA-038		
L10	RF Choke (56mH)	041-088-9-005	LZ-015		
L11	RF Choke (68mH)	041-088-9-006	LZ-015		
L12	RF Choke (470uH)	041-088-9-004	LZ-012		
L13	RF Choke (470uH)	041-088-9-004	LZ-012		
L14	RF Choke (470uH)	041-088-9-004	LZ-012		
L16	VCO	060-035-9-008	LA-160		
L17	VCO Adj.	060-025-9-012	LA-191		
L18	RF Choke (470uH)	041-088-9-004	LZ-012		
L19	RF Choke (100uH)	041-088-9-003	LZ-012		
L20	RF Choke (470uH)	041-088-9-004	LZ-012		
L21	RF Choke (470uH)	041-088-9-004	LZ-012		
L22	RF Choke (470uH)	041-088-9-004	LZ-012		
L23	RF Choke (470uH)	041-088-9-004	LZ-012		
L24	Tripler (33MHz)	060-025-9-011	LA-190		
L25	RF Choke (470uH)	041-088-9-004	LZ-012		
L27	TVI Trap (54MHz)	041-056-9-003	LC-018		
L28	RF Choke	044-043-9-008	LE-051		
L29	RF Choke	044-043-9-008	LE-051		
L30	Final Amp (27MHz)	041-088-9-001	LC-019		
L31	RF Choke	044-043-9-003	LD-018		
L32	Xmit Driver (27MHz)	041-056-9-003	LC-018		
L33	RF Choke	044-043-9-003	LD-018		
L34	RF Choke	044-043-9-003	LD-018		
L35	Xmit Predriver	044-043-9-004	LD-057		
L36	Xmit Amp	044-043-9-004	LD-057		
L37	Xmit Mixer (27MHz)	060-025-9-007	LA-157		
L38	RF Choke (470uH)	041-088-9-004	LZ-012		
L39	IF (7.8MHz)	060-025-9-002	LA-038		
L40	RF Choke	044-043-9-002	LD-013		
L43	RF Choke (1uH)	041-088-9-002	LZ-002		
L44	RF Choke (1uH)	041-088-9-002	LZ-002		
L45	RF Choke (470uH)				
L401	RF Choke (10uH)	044-043-9-001	LD-046		
L402	RF Choke (10uH).	044-043-9-001	LD-046		
L403	RF Choke (10uH)	044-043-9-001	LD-046		
L404	RF Choke (10uH)	044-043-9-001	LD-046		

TRANSFORMER (Audio Output)

ITEM No.	IMPEDANCE		REPLACEMENT DATA			NOTES
	PRI.	SEC.	MFGR. PART No.	THORDARSON PART No.	TRIAD PART No.	
T1	5.1	8	061-033-9-001 TF-109 (1)			(1) Number on unit.

PARTS LIST AND DESCRIPTION (CONTINUED)

(When ordering parts, state Model, Part Number, and Description.)

TRANSFORMER (Power)

ITEM No.	RATING		REPLACEMENT DATA			NOTES
	PRI.	SEC. 1	MFGR. PART No.	THORDARSON PART No.	TRIAD PART No.	
T401	120V AC @ 760mA AC	20.0V AC @ 5.4A AC	065-133-9-001 TF-108 (1)			(1) Number on unit.

SPEAKER

ITEM No.	TYPE	REPLACEMENT DATA		NOTES
		MFGR. PART No.	QUAM PART No.	
SP	3 7/8" X 2 1/2" PM, 8 Ohms	580-025-9-001		

FUSE DEVICES

ITEM No.	DESCRIPTION	REPLACEMENT DATA						
		PART No.		BUSS PART No.		LITTELFUSE PART No.		WORKMAN PART No.
		DEVICE	HOLDER	DEVICE	HOLDER	DEVICE	HOLDER	DEVICE
F401	3A, Quick Acting	191-251-3-003		AGC3	HDJ	318003	150145	FG3-2
F402	3A, Quick Acting	191-251-3-003		AGC3		318003		FG3-2

MICROPHONE

ITEM No.	REPLACEMENT DATA				CONNECTION DATA						
	MFGR. PART No.	GC PART No.	GC NOISE CANCEL	GC POWER	GC CONNECTOR	GC Red	GC Shield	GC Yellow	GC Blue	GC White	GC Black
MIKE	562-019-9-001	18-032	18-034	18-010	18-092	2	1	3	4	NC	1

CRYSTALS

ITEM No.	CRYSTAL FREQUENCY IN MHz	MFGR. PART No.	CTS KNIGHTS PART No.	CHANNEL
X1	7.8025	133-015-9-001	A32M78050	Carrier Osc
X2	7.7975	133-015-9-002	A32M77975	Carrier Osc
X3	11.2858	133-015-9-003	B180M112858	USB Osc

ITEM No.	CRYSTAL FREQUENCY IN MHz	MFGR. PART No.	CTS KNIGHTS PART No.	CHANNEL
X4	11.2842	133-015-9-004	B180M112842	LSB Osc
X5	10.2400	133-015-9-005		Ref Osc
X6	11.2850	133-015-9-006		AM Osc

MISCELLANEOUS

ITEM No.	PART NAME	PART No.	NOTES
D401	LED	158-014-9-001	Channel Indicator
FT1	Filter	143-006-9-001	7.8MHz
FT2	Filter	143-006-9-002	7.8MHz
M401	Meter	320-086-9-001	S/RF
M402	Meter	320-086-9-002	SWR MOD
RL1	Relay	441-017-9-001	Xmit/Rec
J401	Jack	772-037-9-001	Antenna
J402	Jack	773-073-9-001	Mic
J403	Jack	772-025-9-001	PA Speaker
J404	Jack	772-025-9-001	EXT Speaker
J406	Jack	749-095-9-003	Power Supply
L26	Ferrite Bead	044-043-9-006	
L41	Ferrite Bead	044-043-9-005	
L42	Ferrite Bead	044-043-9-005	
L407	Ferrite Bead	044-043-9-007	
S401	Switch	084-057-9-001	ANL/NB/ANL/Off
S402	Switch	083-222-9-001	AM/USB/LSB
S403	Switch	084-057-9-001	SWR
S405	Switch	084-056-9-001	PA/CB
S406	Switch		Power (Part of Volume Control)
S408	Switch	083-221-9-001	Channel Select
	Printed Circuit Board	302-234-9-001	Main
	Printed Circuit Board	302-235-9-001	Channel Selector Switch
	Printed Circuit Board	302-236-9-001	Power Supply
	Cord	420-027-9-001	AC
	Cord	426-021-9-001	DC

CABINETS & CABINET PARTS (When ordering specify model, chassis & color)

ITEM	PART No.
Cabinet, Front Panel	255-155-9-001
Cabinet, Back Panel	262-019-9-001

ITEM	PART No.
Cradle, Microphone	741-074-9-001
Knob, Channel Select	751-147-9-003

WIRING DATA

General-use Hook-up Wire	Use BELDEN No. 8530 (Solid) Available in 13 Colors 8524 (Stranded) Available in 13 Colors
Power Cord, 2-Wire	Use BELDEN No. 17106 (Plastic) -6 feet 17109 (Plastic) -9 feet
Shielded Antenna Lead	Use BELDEN No. 8214 Lowest-loss (RG-8/U Type) 8237 Low-loss (RG-8/U) 8240 (Solid) Miniature (RG-58/U) 8259 (Stranded) Miniature (RG-58A/U)
Coiled Microphone Cable	Use BELDEN No. 8497 3-Conductor (1 shielded for Press-to-Talk) Neoprene
Bonding Strap	Use BELDEN No. 8661 (3/8 inch)