NOTE

Repair or adjustment of transmitter circuits must be under supervision of a person with first-or second-class radiotelephone license.
(Refer to FCC Rules and Regulations Part 95, Subpart C & D.)

The frequency of the transmitter should be checked periodically with a secondary frequency standard to insure proper and legal operation.

Best results will be obtained when adjusting the final RF output circuit if the antenna normally used is connected and the chassis is as nearly in the cabinet as possible.

Connect either 50-ohm dummy load or the normally used antenna system.

MODEL Sidetalk 1000B

ALIGNMENT INSTRUCTIONS

Suggested Alignment Tools: GC Electronics:
L108,L110,T302.....9300
ALL other tunable coils and transformers.....9440
ALL tunable caps.....5000

SYNTHESIZER

INDICATOR	CHANNEL	ADJUST	FREQUENCY	REMARKS
Input of frequency counter to TP2, common to ground.	Any	C415	7.8025MHz ±10Hz	Set mode switch to LSB, receive. Adjust to frequency.
Oscilloscope (Response to 30MHz Input of scope to G1 of Q7, common to ground.		T402, T403		Set mode switch to USB, receive. Adjust for maximum amplitude.
Input of frequency counter thru 20pF in parallel with 20uH coil to G1 of Q7, common to ground.			15.605MHz	The frequency must be 15.605MHz. If not, repeat first step.
Input of scope to TP1, common to ground.	13	T206, T205, T204		Set mode switch to LSB, receive. Set clarifier to center detent. Preset C241 thru C250 to mid-positions. Adjust T206, T205, T204 for maximum amplitude.
Input of frequency counter to TP1, common to ground.	1 2 3 4 8 12 16 20 23	C247 C248 C249 C250 C242 C243 C244 C245 C246	19.1625MHz 19.1725MHz 19.1825MHz 19.2025MHz 19.2525MHz 19.3025MHz 19.3525MHz 19.4025MHz 19.4525MHz	Set mode switch to LSB, receive. Set clarifier to center detent. All frequencies should be within ±50Hz. If this tolerance cannot be obtained C241 may be adjusted to bring frequencies into tolerance.

HOWARD W. SAMS & CO., INC. Indianapolis, Indiana 46206

© 1976 Howard W. Sams & Co., Inc. Printed in U. S. of America 6CZ346

SYNTHESIZER (cont)

INDICATOR	CHANNEL	ADJUST	FREQUENCY	REMARKS
Input of scope to TP1, common to ground.	13	T201, T202, T203, T402, T403	34.9175MHz	Set mode switch to USB. Adjust for maximum amplitude.
Input of frequency counter to TP1, common to ground.	1		34.7675MHz	Set mode switch to USB. Check all channels for these frequencies. If not correct check all preceding steps.
	2		34.7775MHz	
	3		34.7875MHz	
	4		34.8075MHz	
	5		34.8175MHz	
	6		34.8275MHz	
	7		34.8375MHz	
	8		34.8575MHz	
	9		34.8675MHz	
	10		34.8775MHz	
	11		34.8875MHz	
	12		34.9075MHz	
	13		34.9175MHz	
	14		34.9275MHz	
	15		34.9375MHz	
	16		34.9575MHz	
	17		34.9675MHz	
	18		34.9775MHz	
	19		34.9875MHz	
	20		35.0075MHz	
	21		35.0175MHz	
	22		35.0275MHz	
	23		35.0575MHz	
	1		19.165MHz	Set mode switch to AM. Check all channels for these frequencies. If not correct check all preceding steps.
	2		19.175MHz	
	3		19.185MHz	
	4		19.205MHz	
	5		19.215MHz	
	6		19.225MHz	
	7		19.235MHz	
	8		19.255MHz	
	9		19.265MHz	
	10		19.275MHz	
	11		19.285MHz	
	12		19.305MHz	
	13		19.315MHz	
	14		19.325MHz	
	15		19.335MHz	
	16		19.355MHz	
	17		19.365MHz	
	18		19.375MHz	
	19		19.385MHz	
	20		19.405MHz	
	21		19.415MHz	
	22		19.425MHz	
	23		19.455MHz	
Input of frequency counter to antenna jack, common to ground.	13	R228	27.115MHz	Set mode switch to AM Key transmitter, no modulation. Adjust for frequency.
Input of frequency counter to TP1, common to ground.	13		19.3125MHz ±50Hz	Set mode switch to LSB. Set clarifier to detent. This frequency should be obtained.
		R226	19.3131MHz	Rotate clarifier fully clockwise. Adjust for this frequency.
		R227	19.3119MHz	Rotate clarifier fully counter-clockwise. Adjust for this frequency.

RECEIVER

Connect an AC VTVM or AF Wattmeter across speaker voice coil.
Adjustments made with 120-volt AC input to power supply.
Adjust volume control to obtain suitable reading

SIGNAL GENERATOR	GEN FREQ	CHANNEL	ADJUST	REMARKS
High side thru .01uF to gate 1 of Q13, low side to ground.	7.80MHz, 1000Hz @ 30% modulation.	Any	T303,T304, T305,T306, T307	Set mode switch to AM. Set generator output to maintain mid scale reading on S meter. Adjust for maximum.
High side thru .01uF to antenna jack, low side to ground.	27.115MHz, 1000Hz @ 30% modulation, output 1uV	13	T301,T302	Set mode switch to AM. Adjust for maximum.

RECEIVER ADJUSTMENTS

Connect an AC VTVM or AF Wattmeter across speaker voice coil.
These adjustments made with 120-volt AC input to power supply.
Adjust volume control to obtain a suitable reading.

SIGNAL GENERATOR	GEN FREQ	CHANNEL	ADJUST	REMARKS
AGC High side thru .01uF to antenna jack, low side to ground.	27.115MHz, 1000Hz @ 30% modulation, output 0uV.	13	R361	Set RF gain maximum clockwise. Input of DC VTVM to Q12 base, common to ground. Adjust for 1.6V DC.
SQUELCH RANGE High side thru .01uF to antenna jack, low side to ground	27.115MHz 1000Hz @ 30% modulation, output 1000uV.	13	R520	Set squelch control fully clockwise. Adjust so that squelch just breaks.
S METER High side thru .01uF to antenna jack, low side to ground.	27.115MHz, 1000Hz @ 30% modulation, output 100uV.	13	R363(AM) R364(SSB)	Mode switch to AM. Adjust for S9. Mode switch to LSB. Adjust for S9.

TRANSMITTER

Connect an RF Wattmeter or 50-ohm, 25-watt dummy load to antenna connector.
Adjustments made with 120-volt AC input to power supply.

AM

INDICATOR	ADJUST	REMARKS
OUTPUT POWER Input of RF wattmeter to antenna jack, common to ground.	L106	Mode switch to AM. Key transmitter. Adjust for 4 watts output.
TVI TRAP TV (Ch. 2)	C141	Mode switch to AM. Key transmitter. Adjust for MINIMUM interference on TV.

TRANSMITTER

Connect an RF Wattmeter or 50-ohm, 25-watt dummy load to antenna connector.
Adjustments made with 120-volt AC input to power supply.

SSB

INDICATOR	ADJUST	REMARKS
CARRIER BALANCE Input of scope to antenna jack, common to ground.	C414, R414	Short mic input. Set mode switch to LSB or USB. Key transmitter and adjust for MINIMUM on scope.
LSB Input of wattmeter and frequency counter to antenna jack, common to ground.	T103,T102, T101,L110, L108,L106	Set mode switch to LSB. Disable R130 + R616. Set channel selector to Ch. 13. Inject a 1000Hz audio signal at mic jack. Key transmitter, adjust audio oscillator to maintain a 6-7 watt reading on wattmeter. Adjust for maximum.
	L108, 1106	Readjust audio oscillator output for 15 watt reading on wattmeter. Readjust for maximum watts.
USB Input of wattmeter and frequency counter to antenna jack, common to ground.	T403,T402, T203,T202, T201	Set mode switch to USB. Set channel selector to Ch. 13. Inject a 1000Hz audio signal at mic input jack. Key transmitter, adjust audio oscillator to maintain a 6-7 watt reading on wattmeter. Adjust for maximum. Increase audio output to confirm that output is at least 15 watts.

TRANSMITTER ADJUSTMENTS

Connect an RF Wattmeter or 50-ohm, 25-watt dummy load to antenna connector.
Adjustments made with 120-volt AC input to power supply.

INDICATOR	ADJUST	REMARKS
ALC Input of RF wattmeter and scope to antenna jack, common to ground.	R130	Set mode switch to LSB. Key transmitter. Inject a 1000Hz signal at mic input adjusted to produce 15 watts output. Adjust for 12 watts.
AMC Input of modulation meter to antenna jack, common to ground	R616	Set mode switch to AM. Key transmitter. Inject a 1000Hz audio signal at mic input adjusted to produce 50% modulation. Adjust for 100% modulation maximum.
RF PANEL METER Input of RF Wattmeter to antenna jack, common to ground.	R129	Set mode switch to LSB. Inject 1000Hz audio signal to produce 12 watts. Key transmitter. Adjust so that panel RF meter agrees with RF wattmeter.
CAL ADJUST Panel Meter	R133	Set mode switch to AM. Connect a 150 ohm 5 watt non-inductive resistor to antenna jack. Set SWR/Cal switch to Cal. Key transmitter. Adjust R133 so needle is on right end (red) cal. scale. Set SWR/Cal switch to SWR. Adjust R133 to 3 on SWR (green) scale.

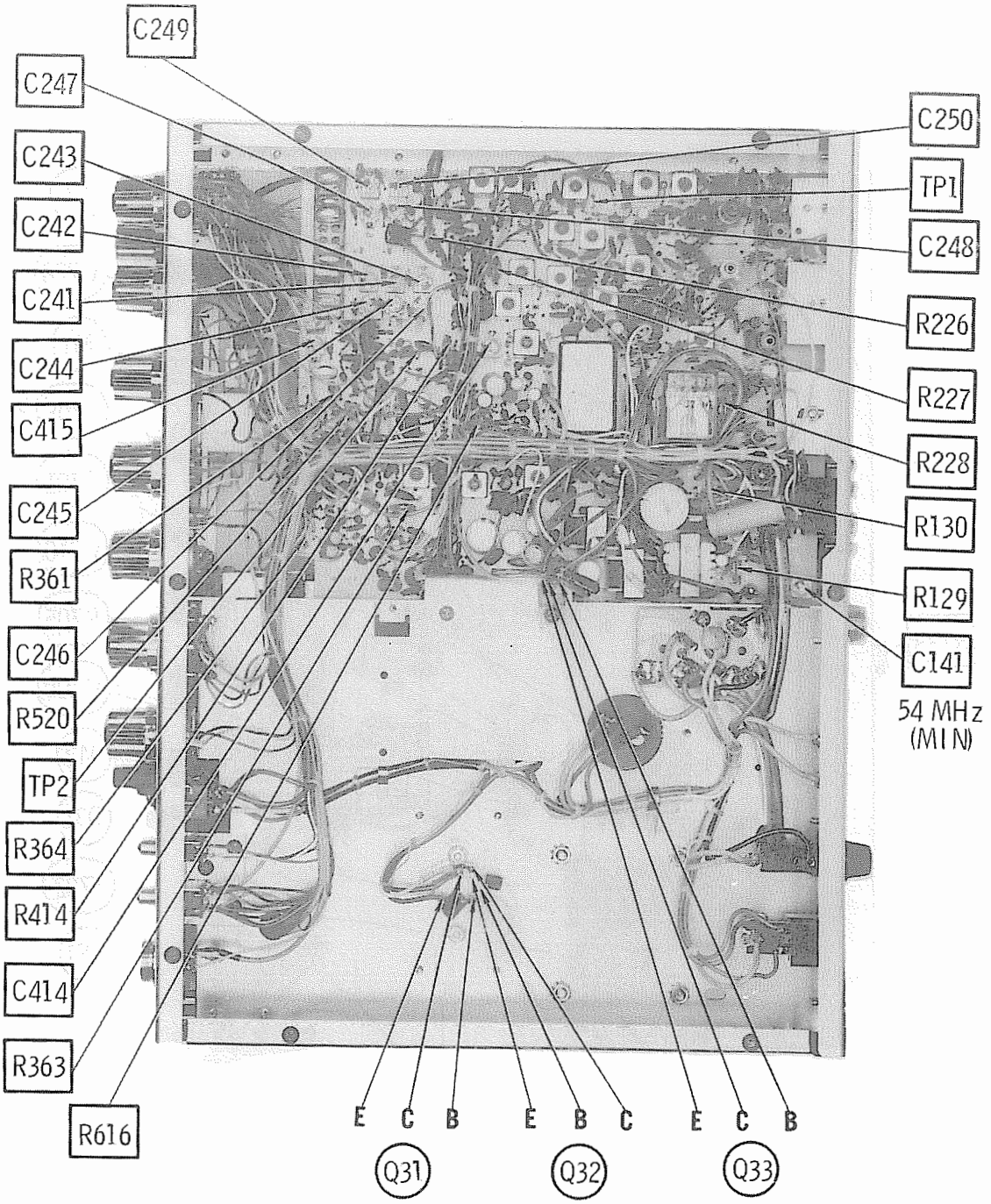

CHASSIS-BOTTOM

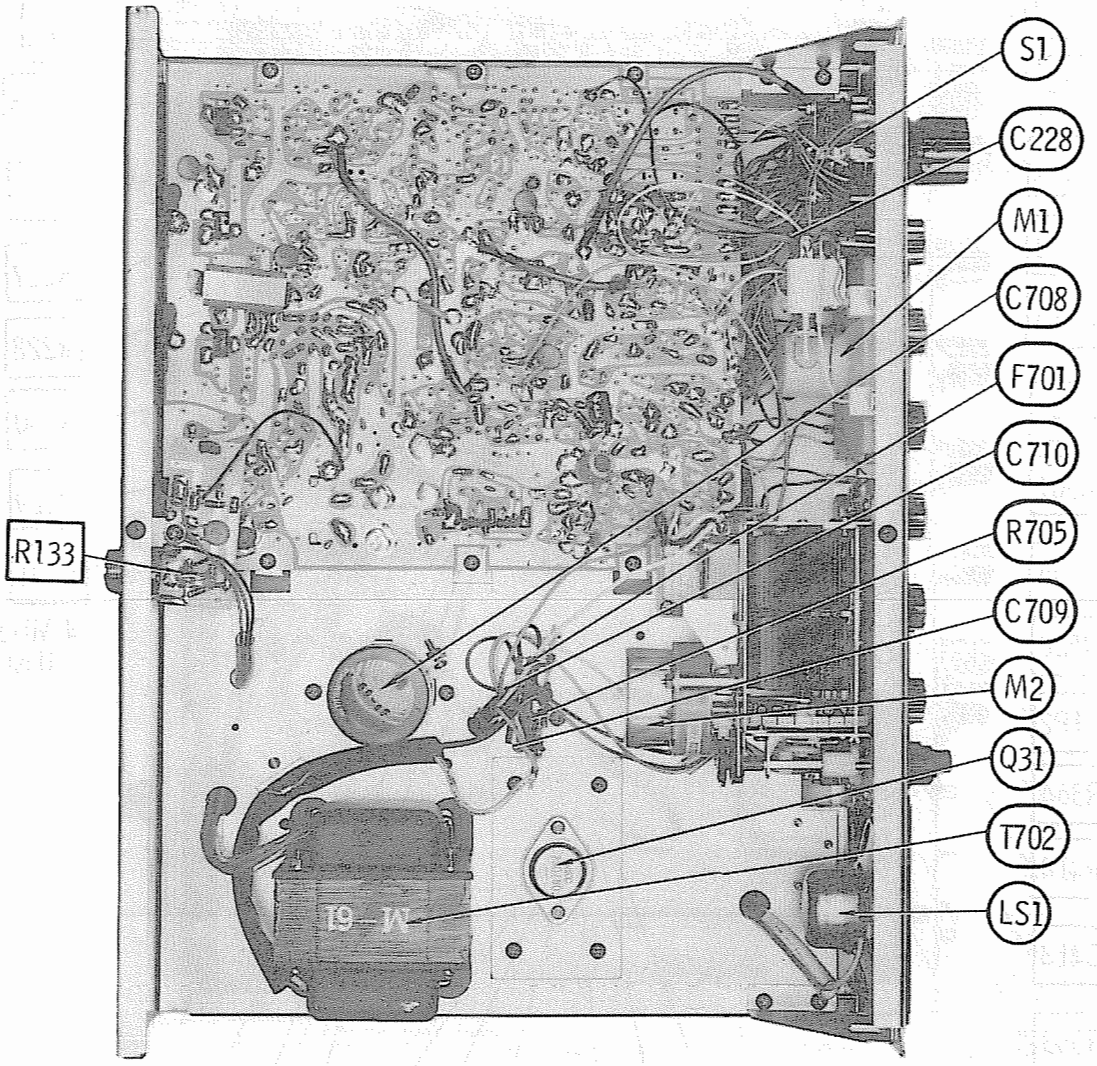

CHASSIS-TOP

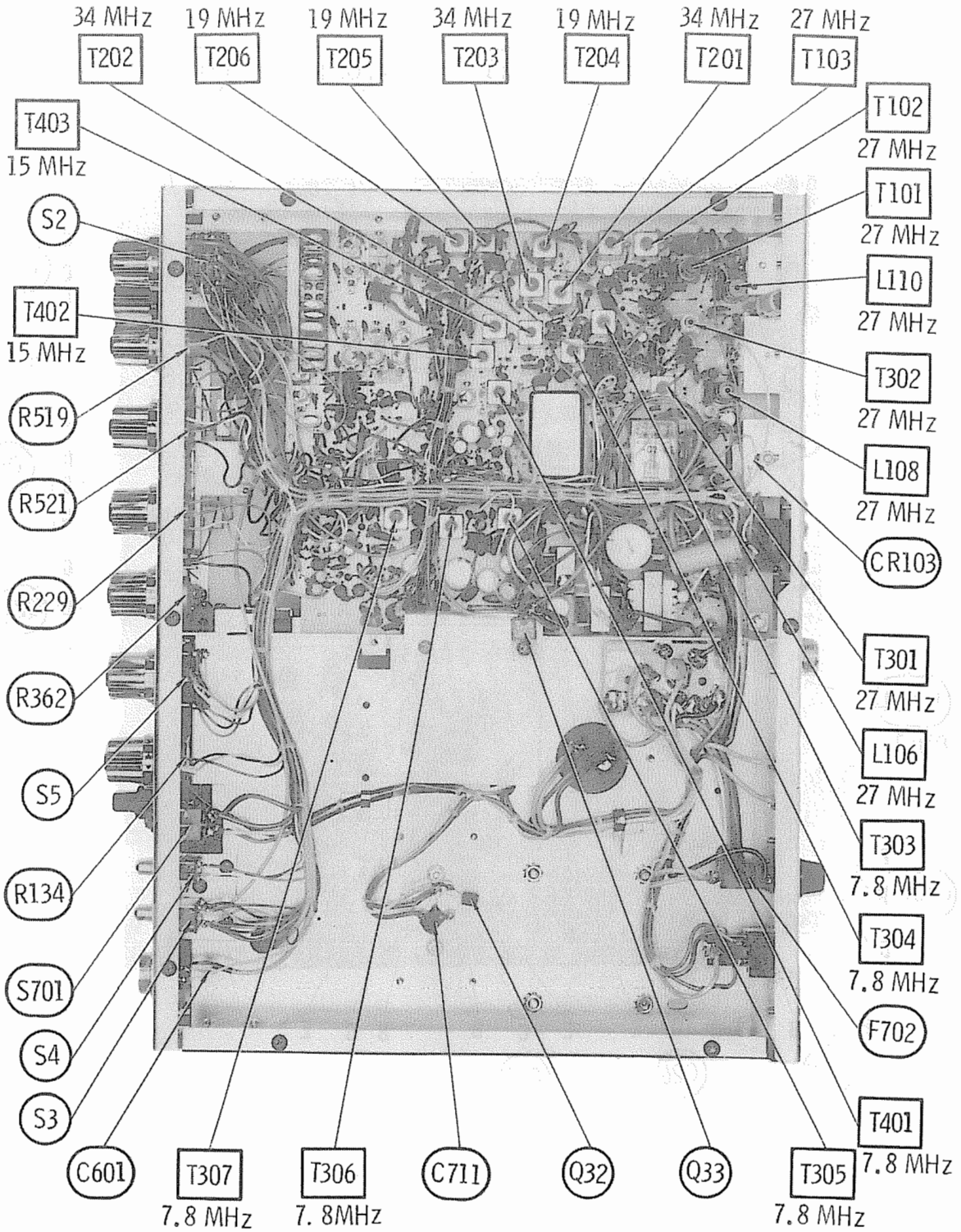

CHASSIS-BOTTOM

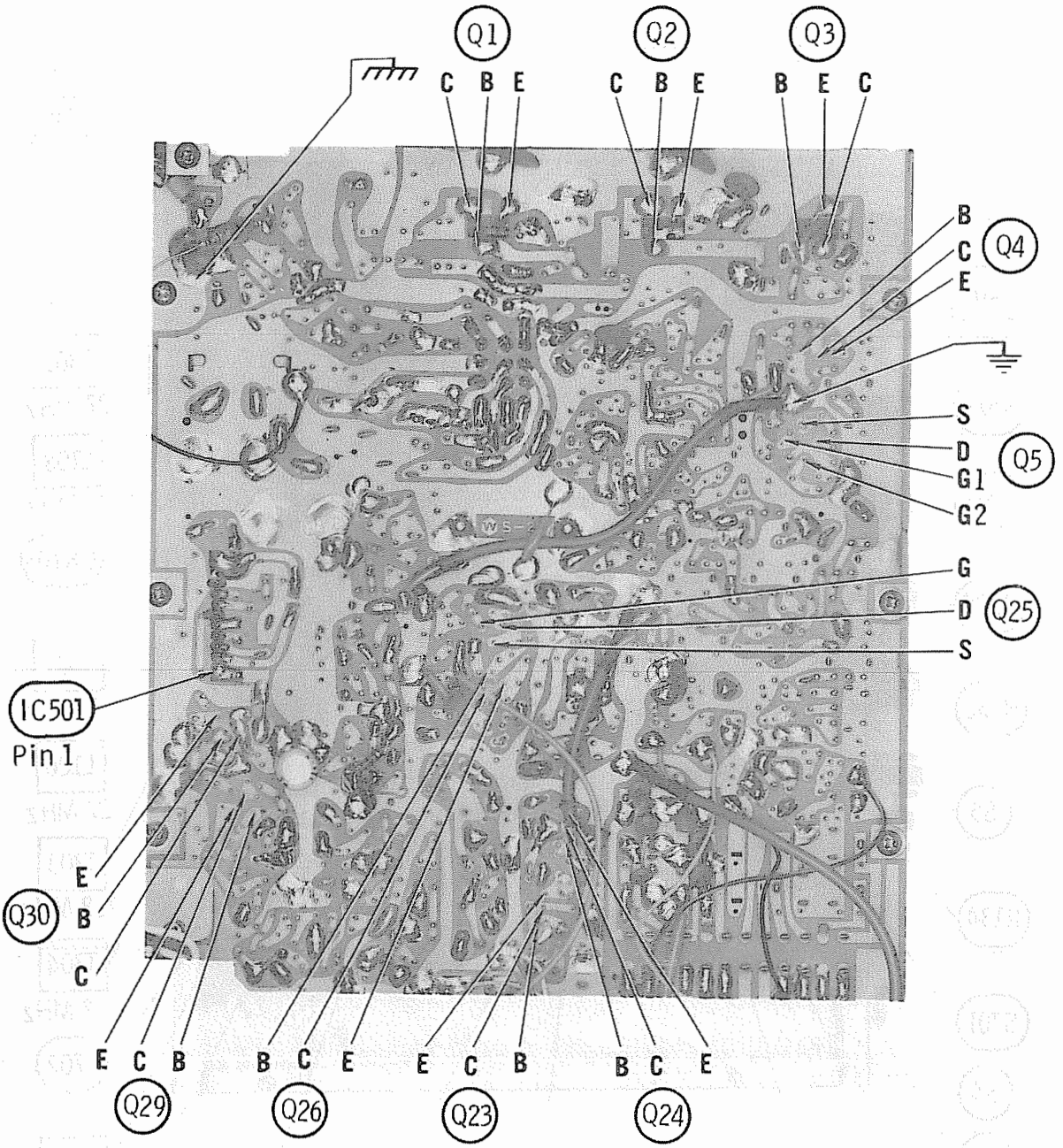
Q1
C B E
Q2
C B E
Q3
B E C
B
C
E
Q4
S
D
G1
G2
Q5
G
D
S
Q25
IC501
Pin 1
E
B
C
Q30
E C B
Q29
B C E
Q26
E C B
Q23
B C E
Q24

MAIN BOARD

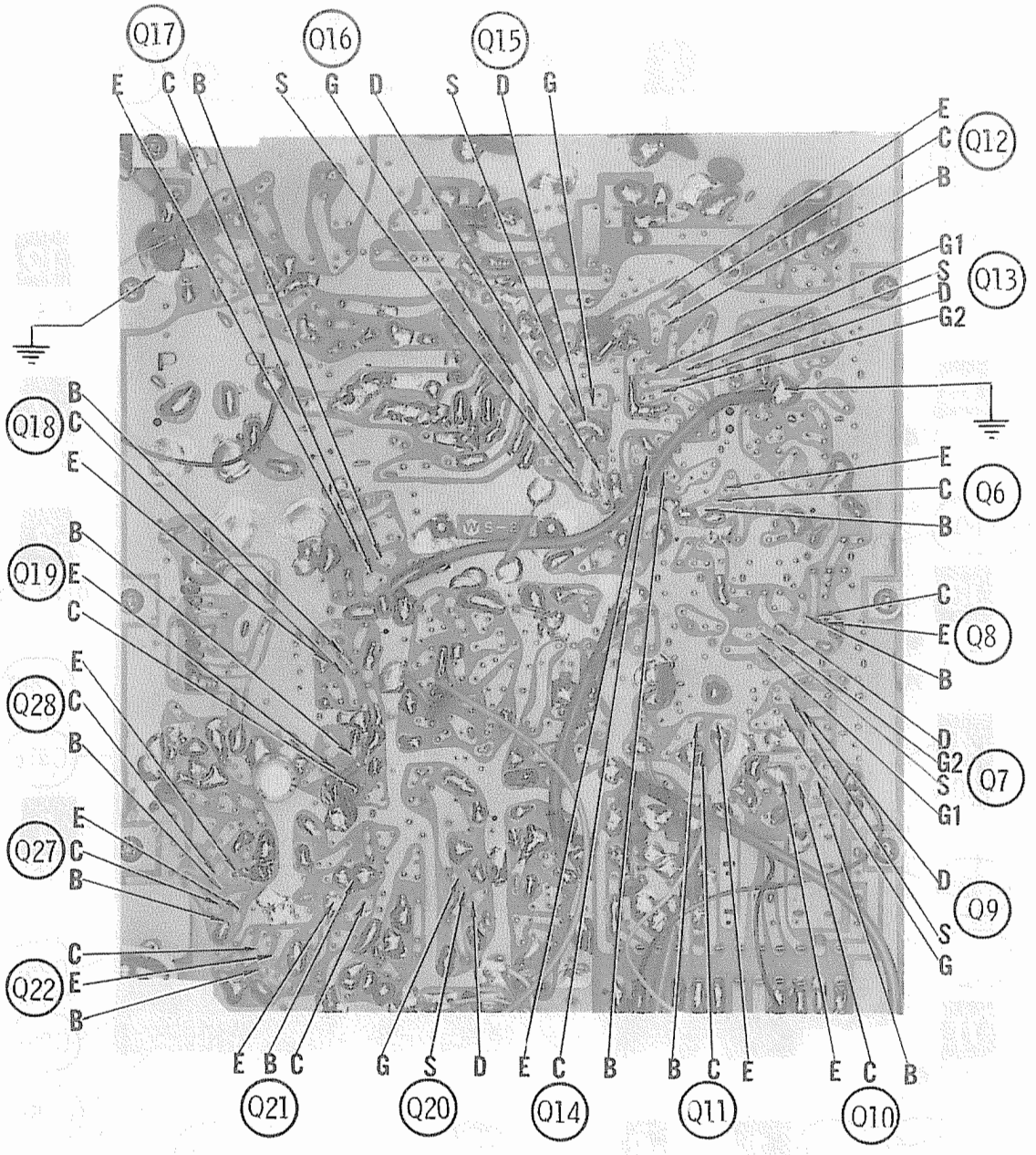
Q17
E C B
Q16
S G D
Q15
S D G
Q12
E C B
Q13
G1 S D G2
Q18
B C E
Q19
B E C
Q28
E C B
Q27
E C B
Q22
C E B
Q6
E C B
Q8
C E B
Q7
D G2 S G1
Q9
D S G
Q21
E B C
Q20
G S D
Q14
E C B
Q11
B C E
Q10
E C B

MAIN BOARD

A Howard W. Sams CIRCUITRACE® Photo

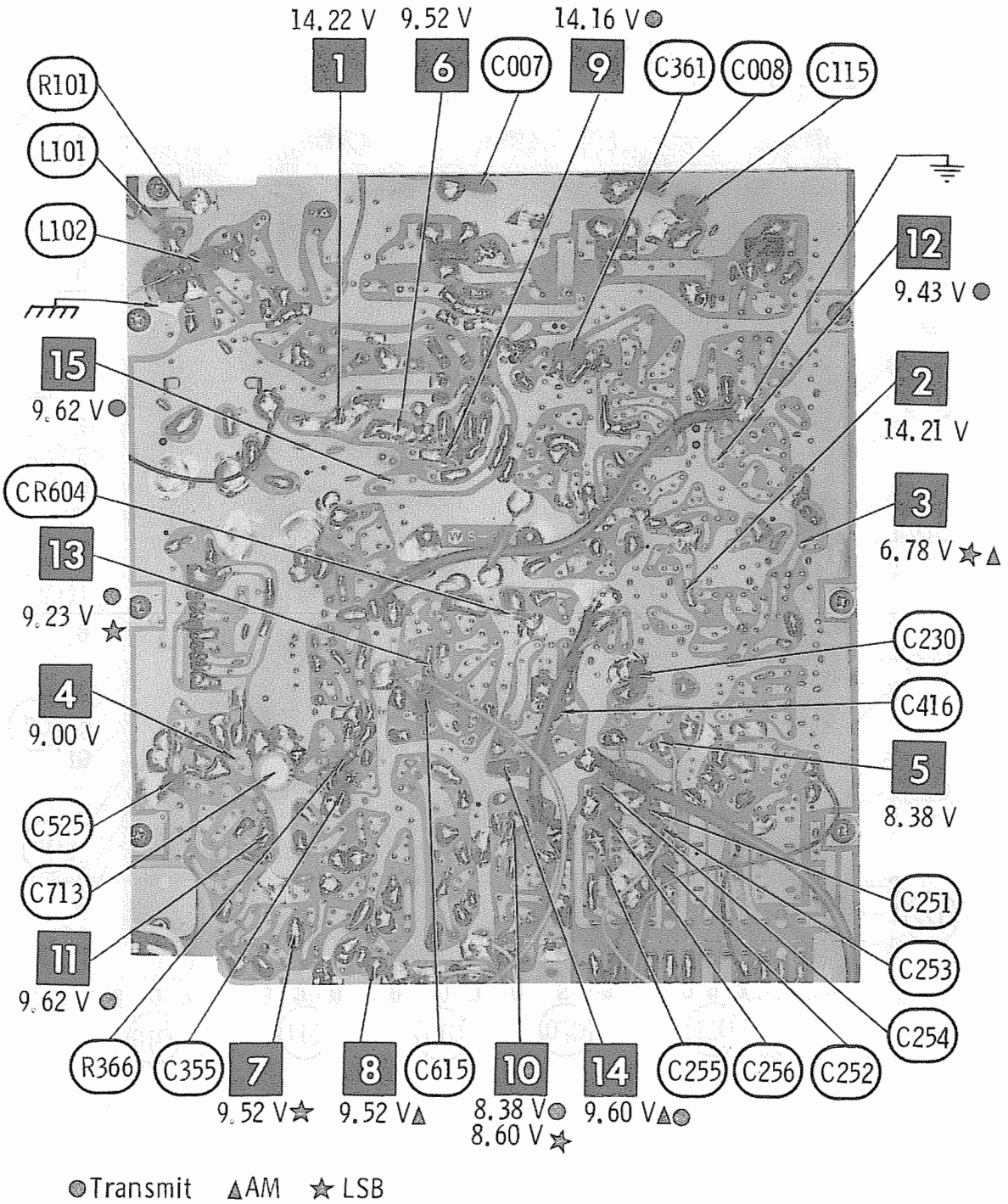

MAIN BOARD

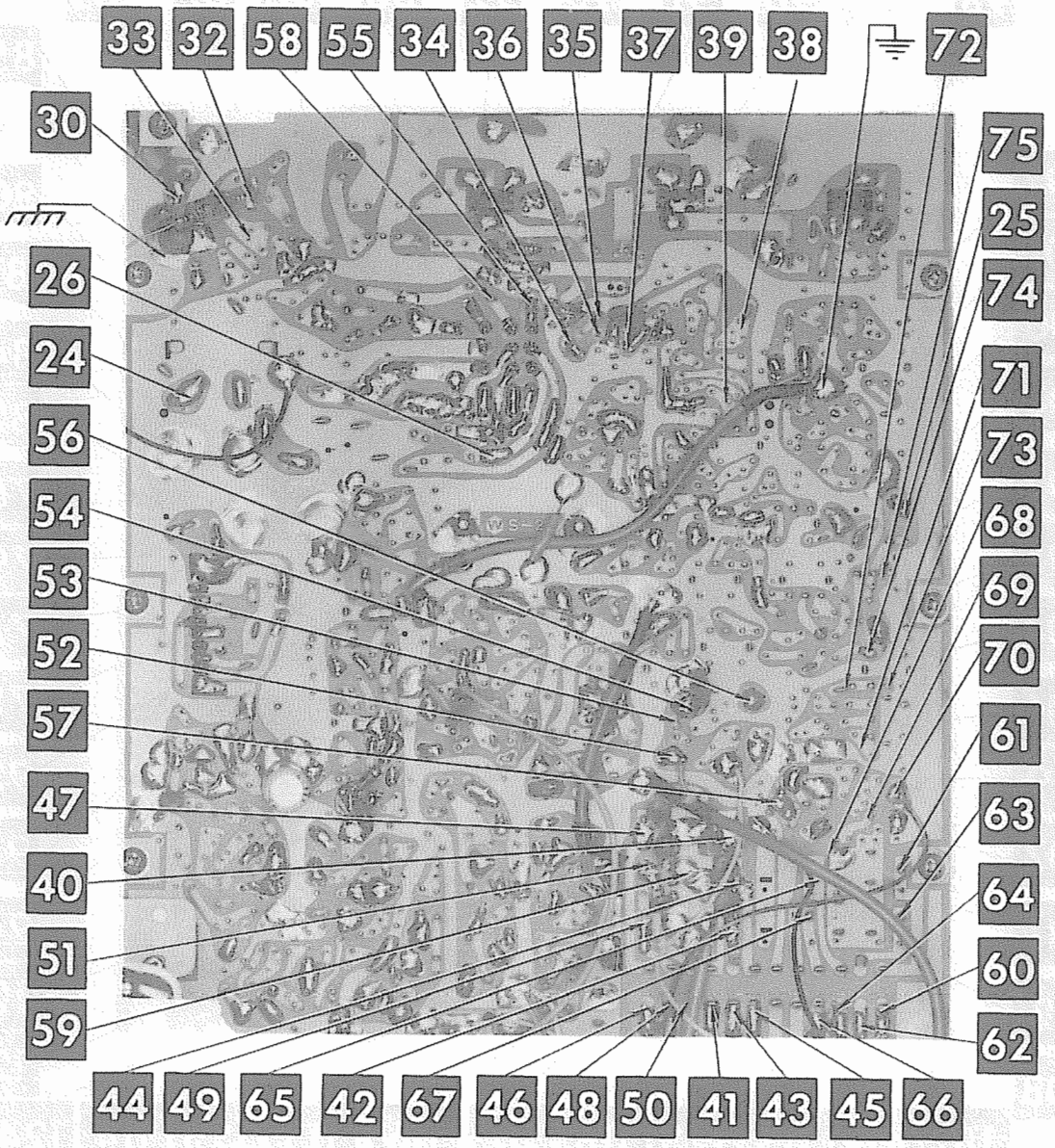
33
32
58
55
34
36
35
37
39
38
72
30
75
25
26
74
24
71
56
73
54
68
53
69
52
70
57
61
47
63
40
64
51
60
59
62
44
49
65
42
67
46
48
50
41
43
45
66

MAIN BOARD

A Howard W. Sams CIRCUITRACE® Photo

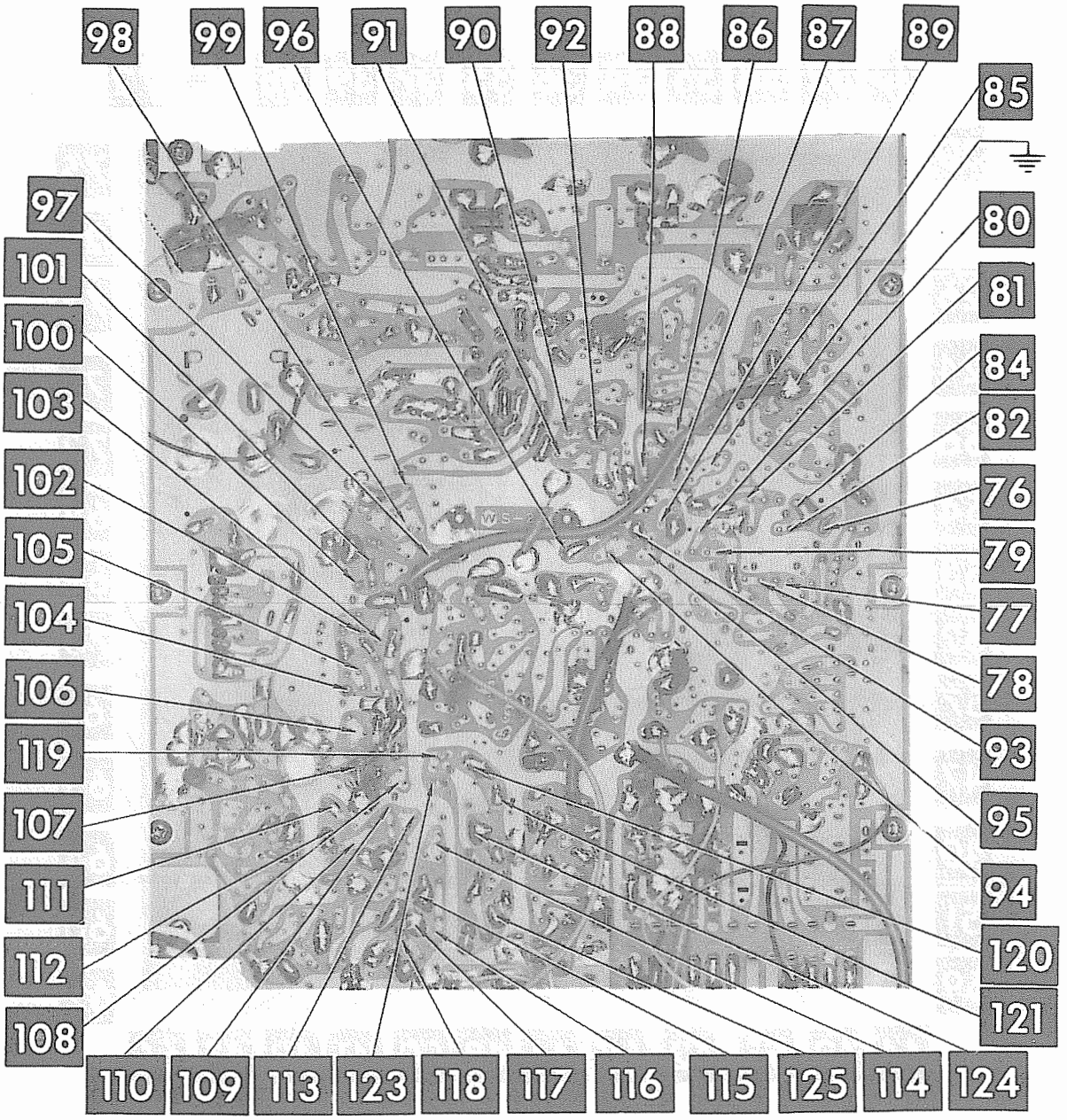

MAIN BOARD

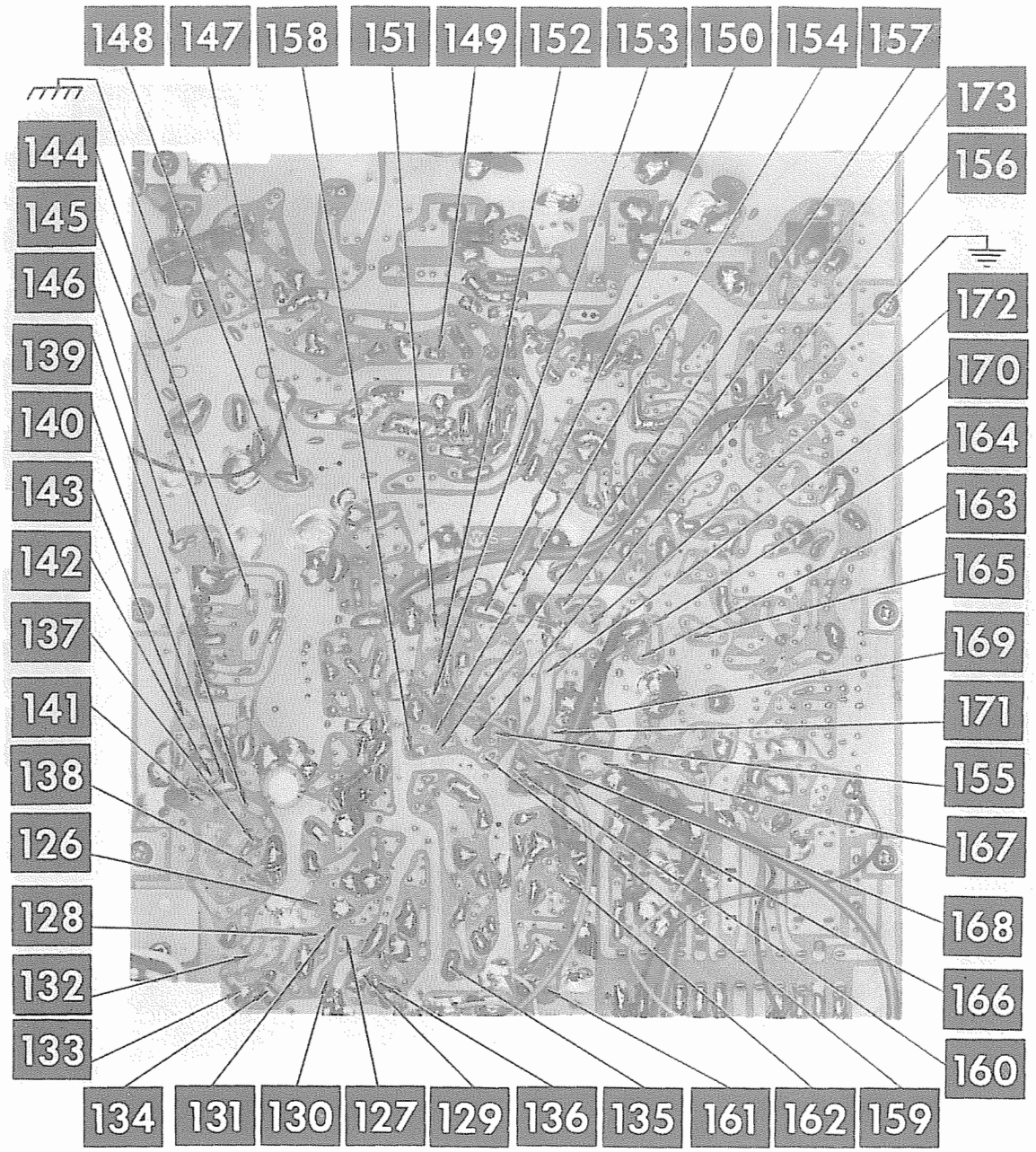
148
147
158
151
149
152
153
150
154
157
173
156
172
170
164
163
165
169
171
155
167
168
166
160
159
162
161
135
136
129
127
130
131
134
133
132
128
126
138
141
137
142
143
140
139
146
145
144

MAIN BOARD

A Howard W. Sams CIRCUITRACE® Photo

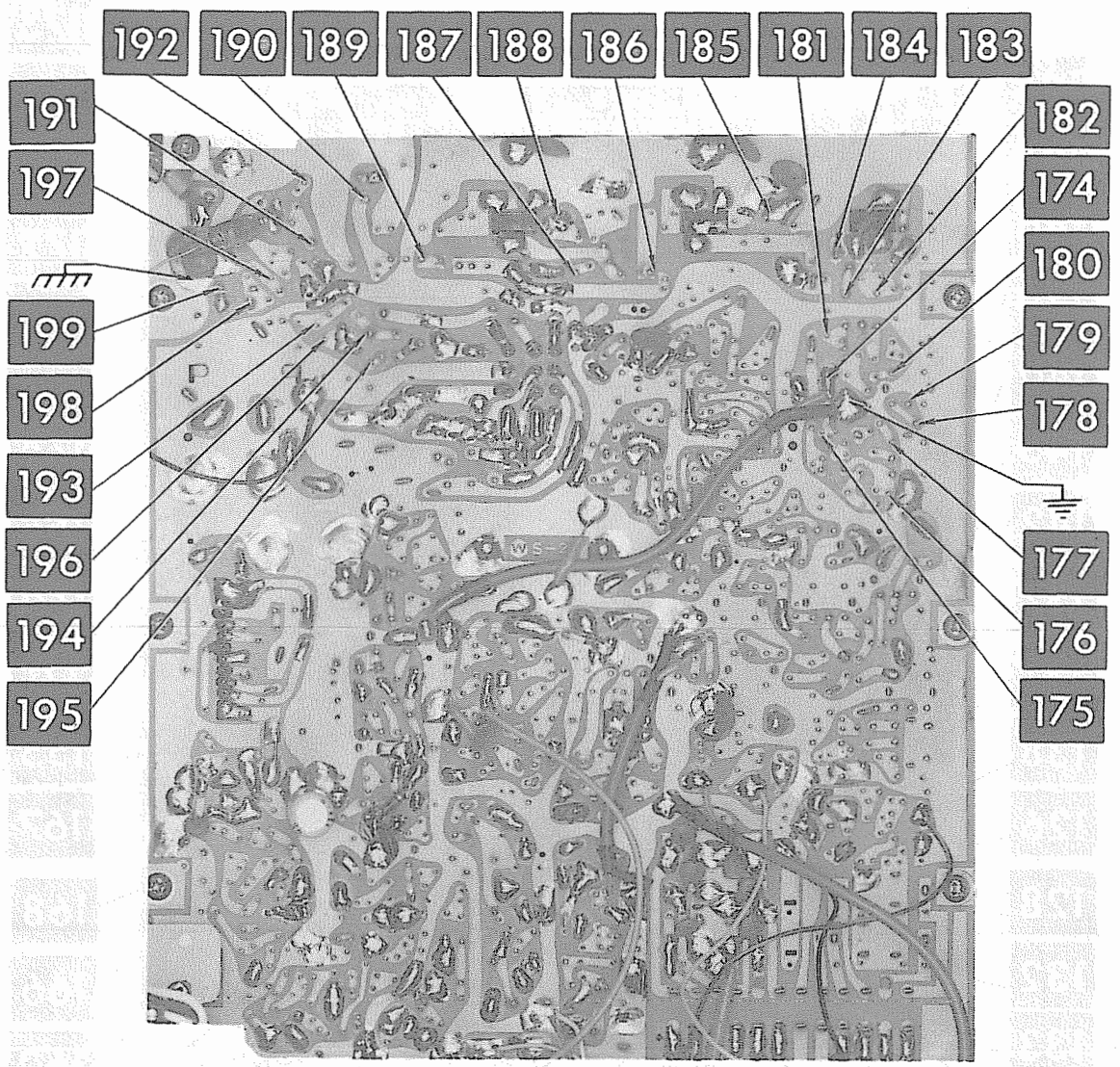

MAIN BOARD

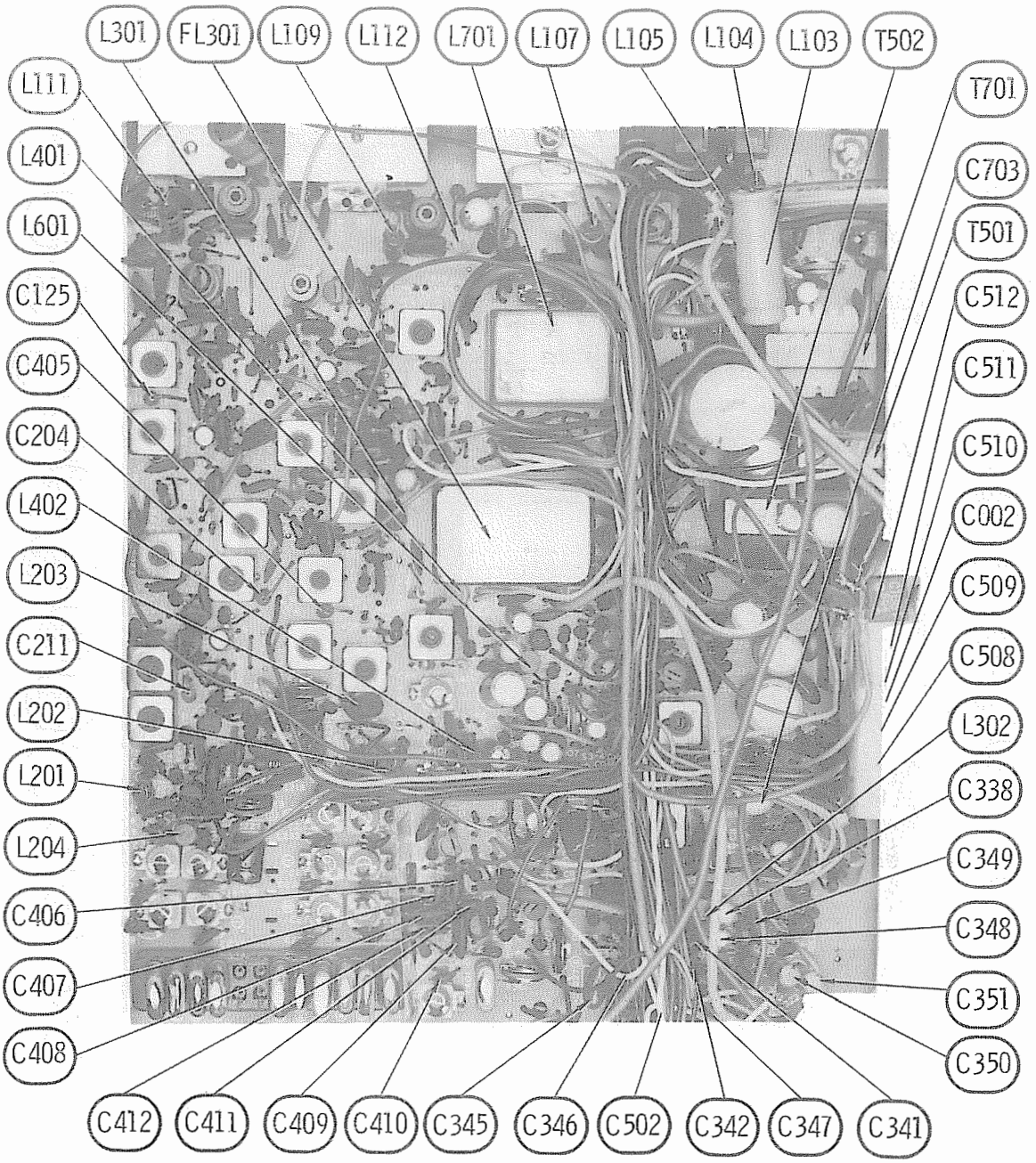
L301
FL301
L109
L112
L701
L107
L105
L104
L103
T502
L111
L401
L601
C125
C405
C204
L402
L203
C211
L202
L201
L204
C406
C407
C408
T701
C703
T501
C512
C511
C510
C002
C509
C508
L302
C338
C349
C348
C351
C350
C412
C411
C409
C410
C345
C346
C502
C342
C347
C341

MAIN BOARD

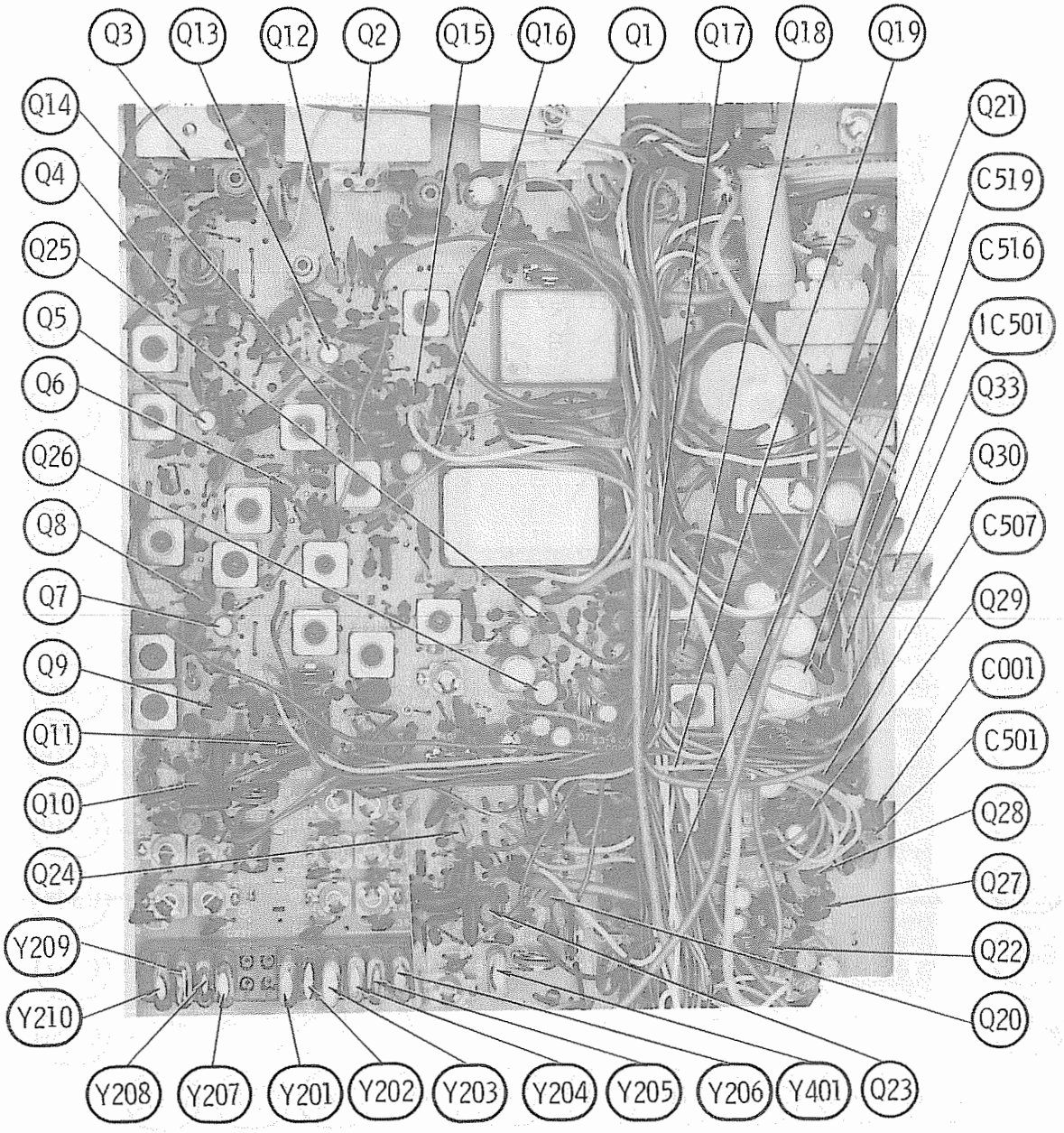
Q3
Q13
Q12
Q2
Q15
Q16
Q1
Q17
Q18
Q19
Q14
Q4
Q25
Q5
Q6
Q26
Q8
Q7
Q9
Q11
Q10
Q24
Y209
Y210
Q21
C519
C516
IC501
Q33
Q30
C507
Q29
C001
C501
Q28
Q27
Q22
Q20
Y208
Y207
Y201
Y202
Y203
Y204
Y205
Y206
Y401
Q23

MAIN BOARD

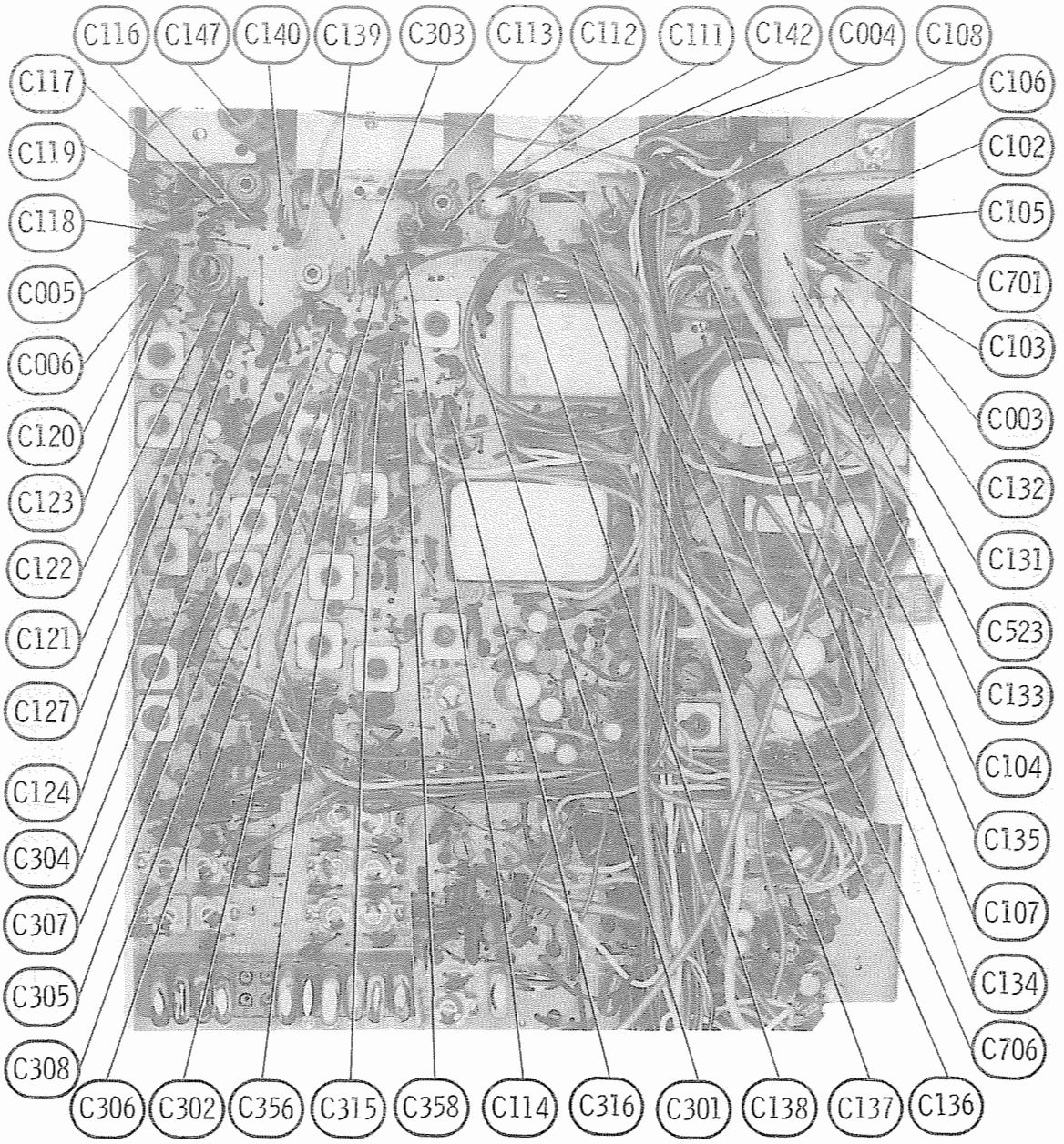
C116
C147
C140
C139
C303
C113
C112
C111
C142
C004
C108
C117
C119
C118
C005
C006
C120
C123
C122
C121
C127
C124
C304
C307
C305
C308
C306
C302
C356
C315
C358
C114
C316
C301
C138
C137
C136
C706
C134
C107
C135
C104
C133
C523
C131
C132
C003
C103
C701
C105
C102
C106

MAIN BOARD

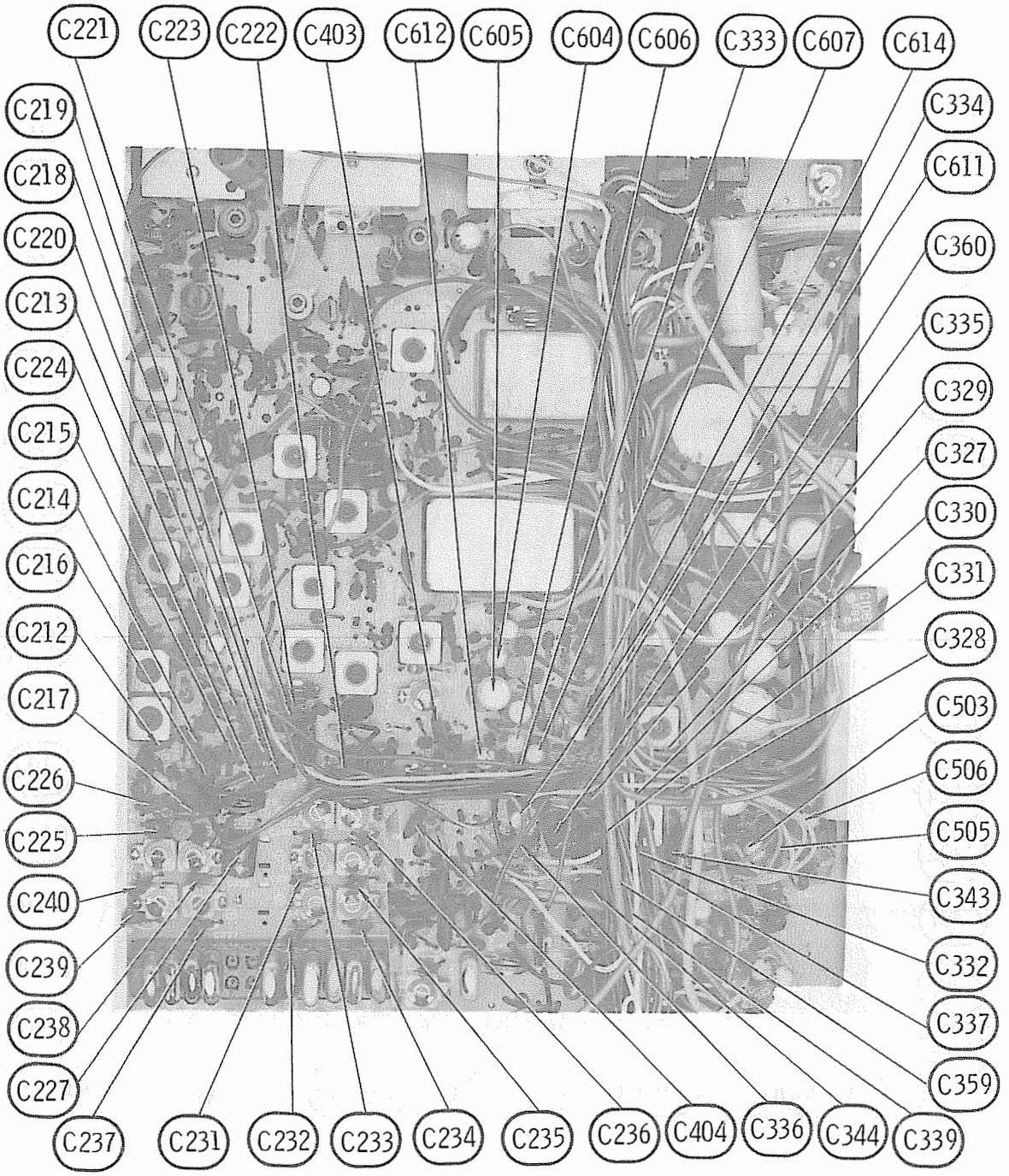
C221
C223
C222
C403
C612
C605
C604
C606
C333
C607
C614
C219
C218
C220
C213
C224
C215
C214
C216
C212
C217
C226
C225
C240
C239
C238
C227
C237
C231
C232
C233
C234
C235
C236
C404
C336
C344
C339
C334
C611
C360
C335
C329
C327
C330
C331
C328
C503
C506
C505
C343
C332
C337
C359

MAIN BOARD

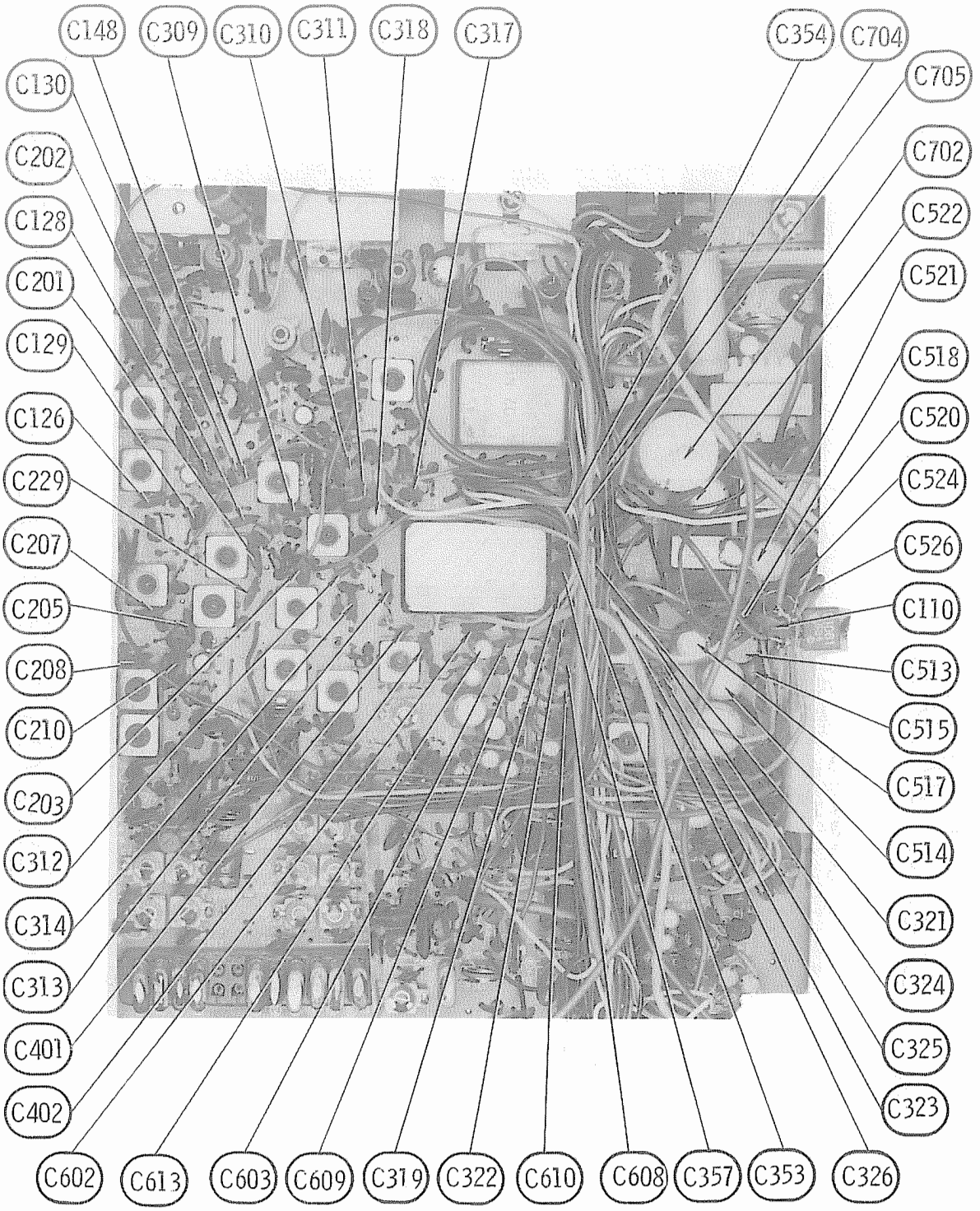
C148
C309
C310
C311
C318
C317
C354
C704
C705
C702
C522
C521
C518
C520
C524
C526
C110
C513
C515
C517
C514
C321
C324
C325
C323
C130
C202
C128
C201
C129
C126
C229
C207
C205
C208
C210
C203
C312
C314
C313
C401
C402
C602
C613
C603
C609
C319
C322
C610
C608
C357
C353
C326

MAIN BOARD

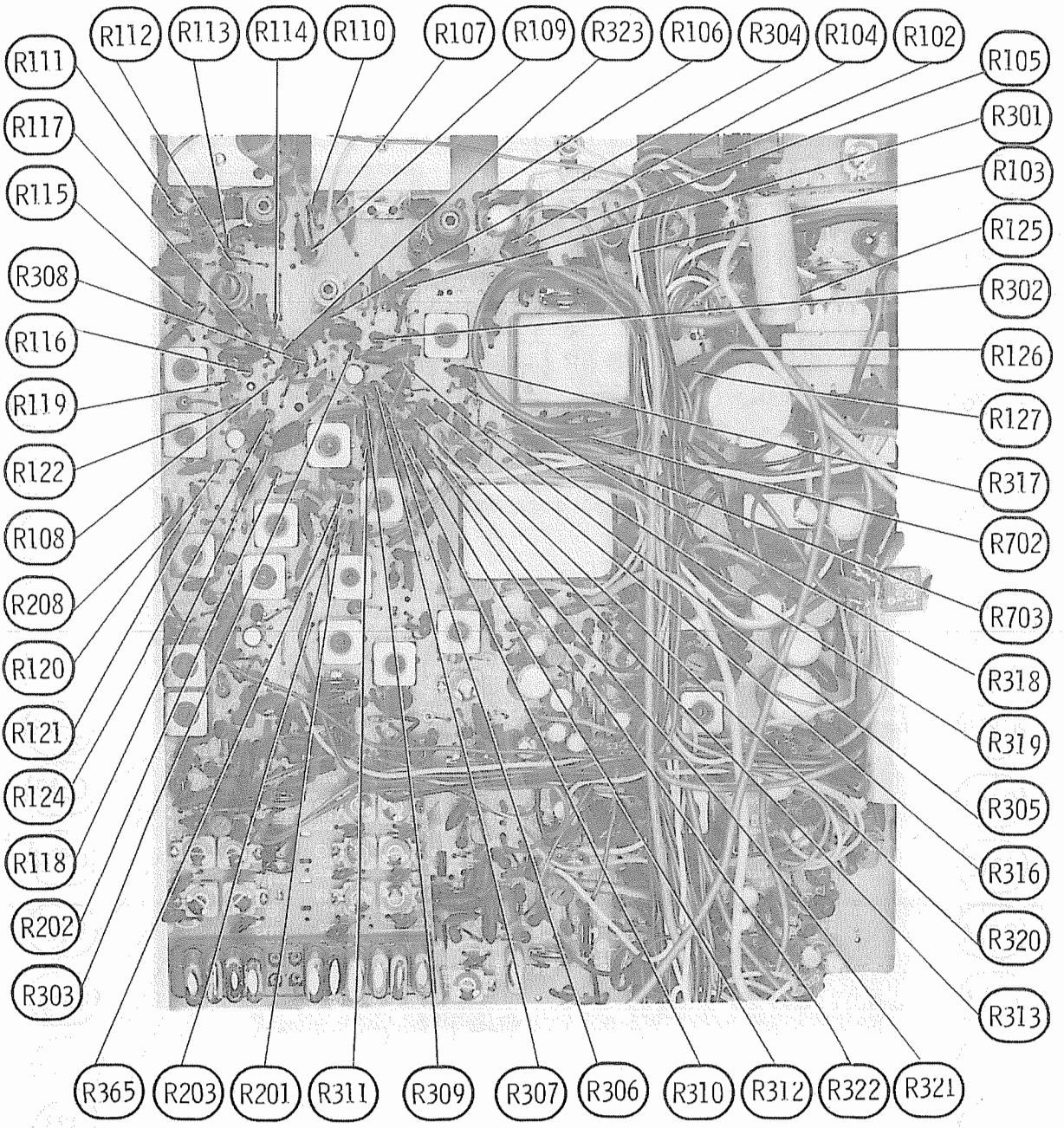
R112
R113
R114
R110
R107
R109
R323
R106
R304
R104
R102
R111
R117
R115
R308
R116
R119
R122
R108
R208
R120
R121
R124
R118
R202
R303
R105
R301
R103
R125
R302
R126
R127
R317
R702
R703
R318
R319
R305
R316
R320
R313
R365
R203
R201
R311
R309
R307
R306
R310
R312
R322
R321

MAIN BOARD

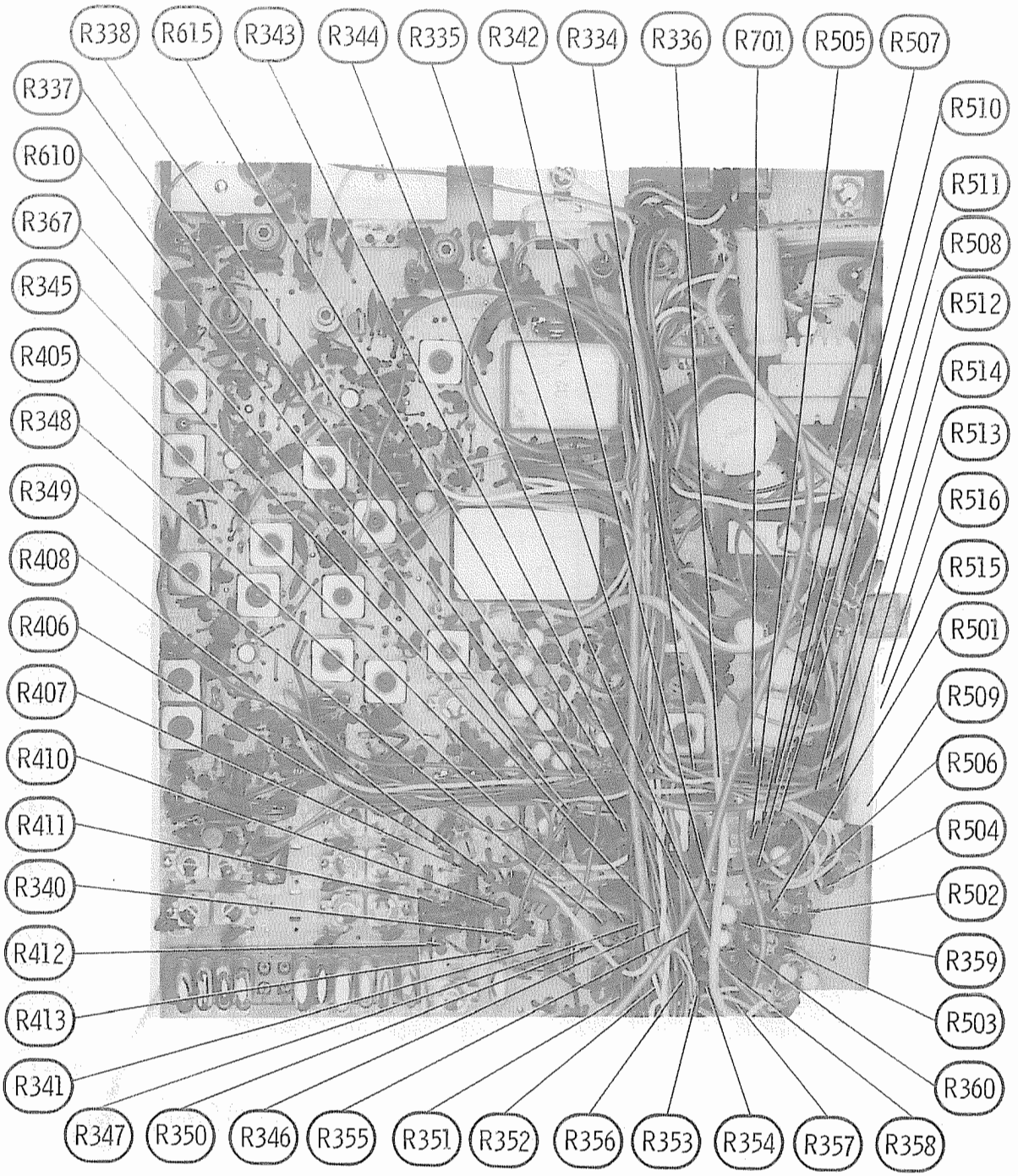
R338
R615
R343
R344
R335
R342
R334
R336
R701
R505
R507
R337
R610
R367
R345
R405
R348
R349
R408
R406
R407
R410
R411
R340
R412
R413
R341
R347
R350
R346
R355
R351
R352
R356
R353
R354
R357
R358
R510
R511
R508
R512
R514
R513
R516
R515
R501
R509
R506
R504
R502
R359
R503
R360

MAIN BOARD

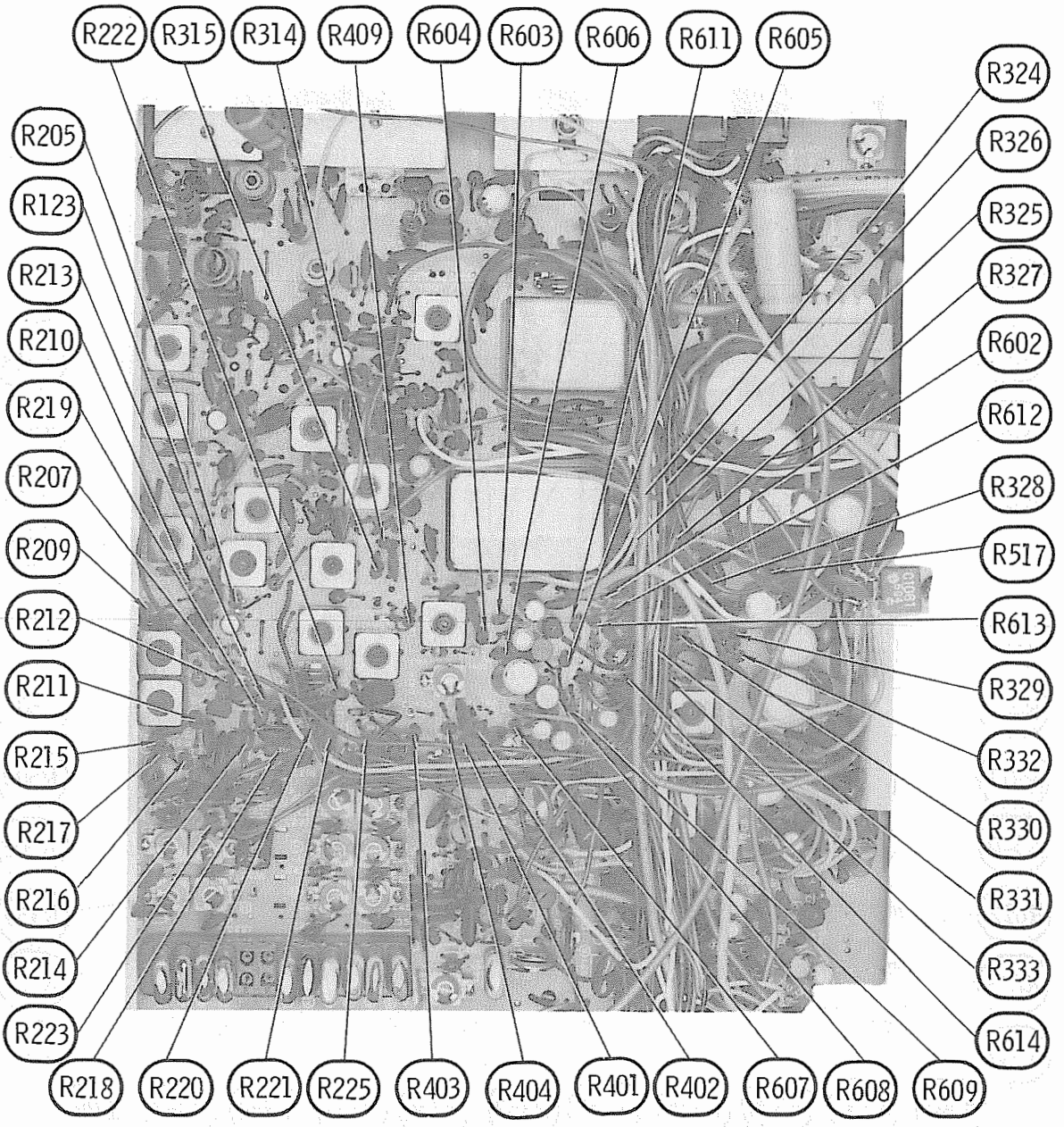
R222
R315
R314
R409
R604
R603
R606
R611
R605
R324
R326
R325
R327
R602
R612
R328
R517
R613
R329
R332
R330
R331
R333
R614
R205
R123
R213
R210
R219
R207
R209
R212
R211
R215
R217
R216
R214
R223
R218
R220
R221
R225
R403
R404
R401
R402
R607
R608
R609

MAIN BOARD

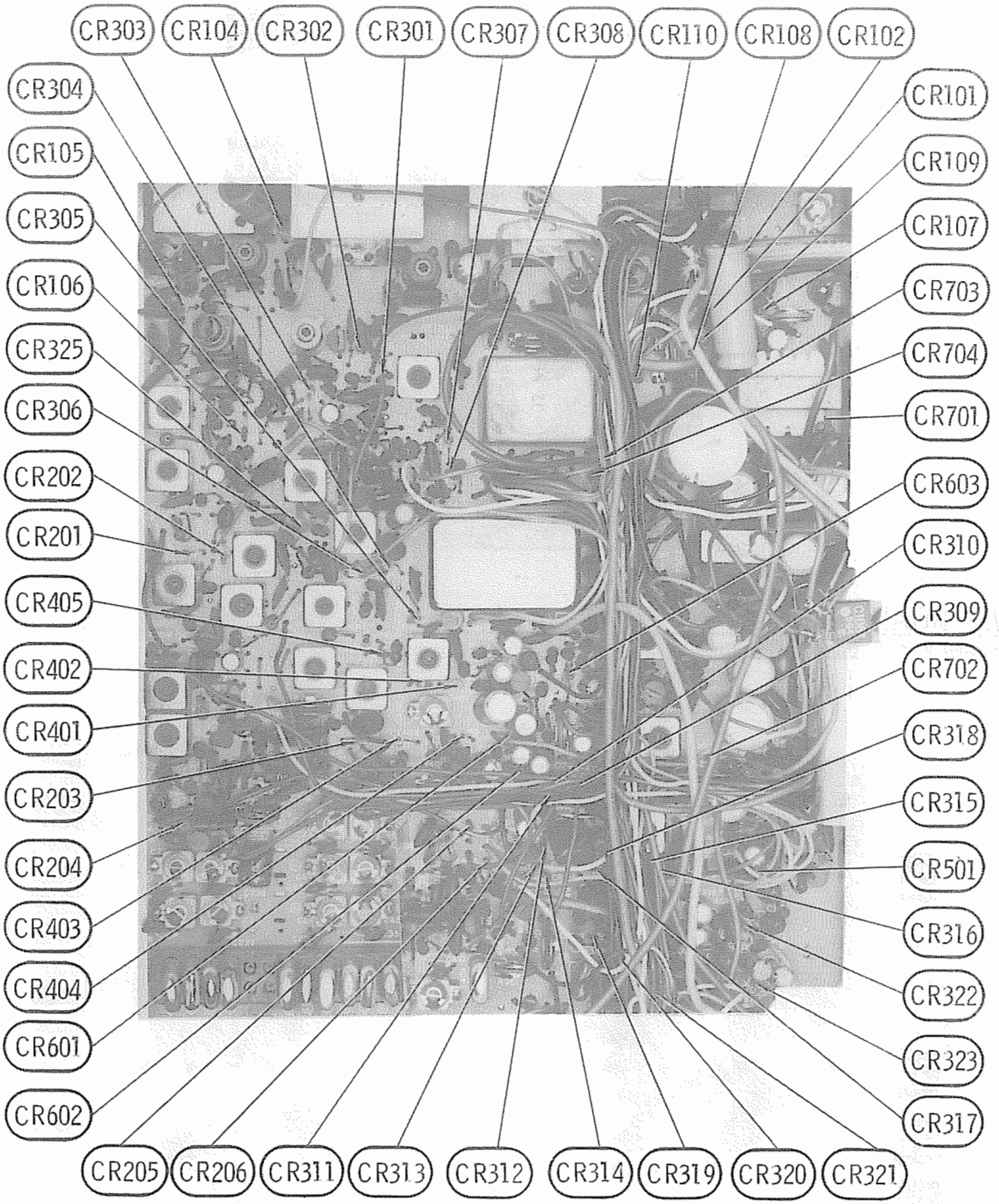
CR303
CR104
CR302
CR301
CR307
CR308
CR110
CR108
CR102
CR304
CR105
CR305
CR106
CR325
CR306
CR202
CR201
CR405
CR402
CR401
CR203
CR204
CR403
CR404
CR601
CR602
CR101
CR109
CR107
CR703
CR704
CR701
CR603
CR310
CR309
CR702
CR318
CR315
CR501
CR316
CR322
CR323
CR317
CR205
CR206
CR311
CR313
CR312
CR314
CR319
CR320
CR321

MAIN BOARD

A Howard W. Sams CIRCUITRACE® Photo

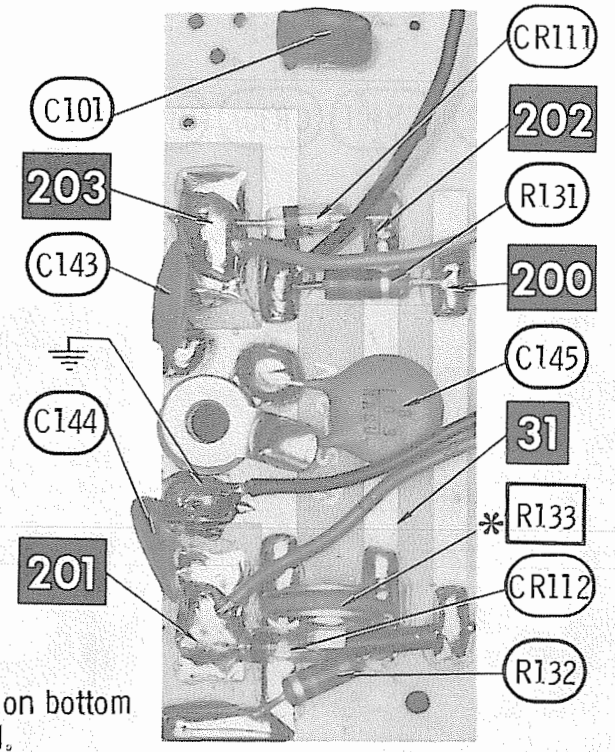

* Located on bottom of board.

SWR BOARD

A Howard W. Sams CIRCUITRACE® Photo

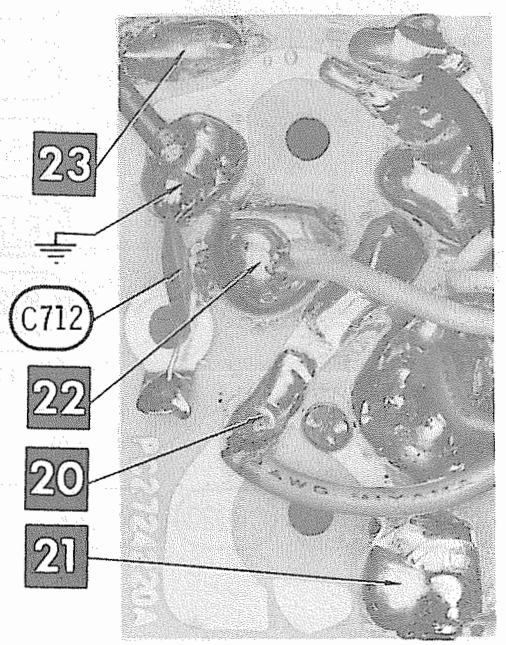

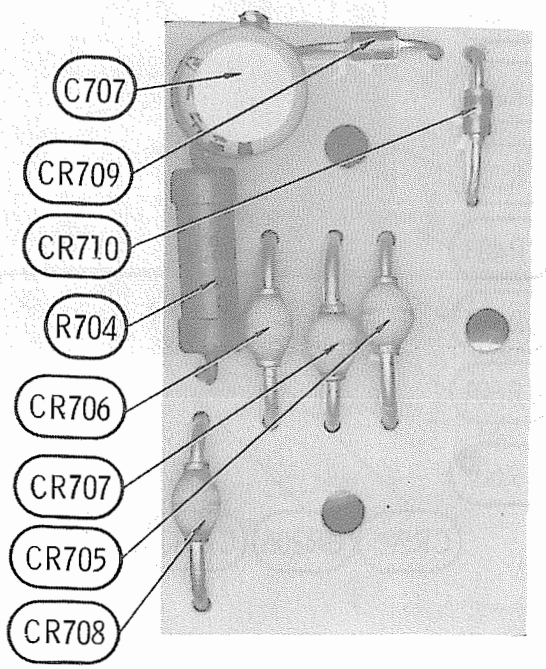

AC POWER SUPPLY BOARD

PARTS LIST AND DESCRIPTION

(When ordering parts, state Model, Part Number, and Description.)

SEMICONDUCTORS (Select replacement transistor for best results)

ITEM No.	TYPE No.	MFGR. PART No.	REPLACEMENT DATA							
			GENERAL ELECTRIC PART No.	MALLORY PART No.	MOTOROLA PART No.	RAYTHEON PART No.	RCA PART No.	SPRAGUE PART No.	SYLVANIA PART No.	WORKMAN PART No.
CR101	10D4	IP20-0022	GE-504A	PTC201	HEPR0052	RE 49	SK3030	RT-213	ECG116	5A4D
CR102	10D4	IP20-0022	GE-504A	PTC201	HEPR0052	RE 49	SK3030	RT-213	ECG116	5A4D
CR103	1S990S (.7 Volt Zener)	IP20-0018								
CR104	1S990S (.7 Volt Zener)	IP20-0018								
CR105	1S990S (.7 Volt Zener)	IP20-0018								
CR106	WG-713	IP20-0145	GE-300	PTC214	HEPR0602	RE 52	SK3100	RT-218	ECG177	D200
CR107	1N60	IP20-0060	1N60	PTC206	HEPR9135	RE 47	SK3088	RT-263	ECG109	1N60
CR108	1N60	IP20-0060	1N60	PTC206	HEPR9135	RE 47	SK3088	RT-263	ECG109	1N60
CR109	1N60	IP20-0060	1N60	PTC206	HEPR9135	RE 47	SK3088	RT-263	ECG109	1N60
CR110	1N60	IP20-0060	1N60	PTC206	HEPR9135	RE 47	SK3088	RT-263	ECG109	1N60
CR111	1N60P	IP20-0016	1N60	PTC206	HEPR9135	RE 47	SK3088	RT-263	ECG109	1N60
CR112	1N60	IP20-0060	1N60	PTC206	HEPR9135	RE 47	SK3088	RT-263	ECG109	1N60
CR201	WG-713	IP20-0145	GE-300	PTC214	HEPR0602	RE 52	SK3100	RT-218	ECG177	0200
CR202	WG-713	IP20-0145	GE-300	PTC214	HEPR0602	RE 52	SK3100	RT-218	ECG177	0200
CR203	ITT-310 (Varactor)	IP20-0151	GE-90		HEPR2503	RE 195	SK3126	RT-262		D201
CR204	1S1007	IP20-0020	1N34AS	PTC207	HEPR9134	RE 47	SK3087	RT-200	ECG109	1N34A
CR205	WG-713	IP20-0145	GE-300	PTC214	HEPR0602	RE 52	SK3100	RT-218	ECG177	D200
CR206	WG-713	IP20-0145	GE-300	PTC214	HEPR0602	RE 52	SK3100	RT-218	ECG177	0200
CR301	1S2472	IP20-0021	GE-300	PTC214	HEPR0602	RE 52	SK3100	RT-218	ECG177	0200
CR302	1S2472	IP20-0021	GE-300	PTC214	HEPR0602	RE 52	SK3100	RT-218	ECG177	0200
CR303	1S1007	IP20-0020	1N34AS	PTC207	HEPR9134	RE 47	SK3087	RT-200	ECG109	1N34A
CR304	1N60P	IP20-0016	1N60	PTC206	HEPR9135	RE 47	SK3088	RT-263	ECG109	1N60
CR305	1N60P	IP20-0016	1N60	PTC206	HEPR9135	RE 47	SK3088	RT-263	ECG109	1N60
CR306	WG-713	IP20-0145	GE-300	PTC214	HEPR0602	RE 52	SK3100	RT-218	ECG177	D200
CR307	1N60	IP20-0060	1N60	PTC206	HEPR9135	RE 47	SK3088	RT-263	ECG109	1N60
CR308	1N60	IP20-0060	1N60	PTC206	HEPR9135	RE 47	SK3088	RT-263	ECG109	1N60
CR309	1N60	IP20-0060	1N60	PTC206	HEPR9135	RE 47	SK3088	RT-263	ECG109	1N60
CR310	WG-713	IP20-0145	GE-300	PTC214	HEPR0602	RE 52	SK3100	RT-218	ECG177	D200
CR311	WG-713	IP20-0145	GE-300	PTC214	HEPR0602	RE 52	SK3100	RT-218	ECG177	D200
CR312	WG-713	IP20-0145	GE-300	PTC214	HEPR0602	RE 52	SK3100	RT-218	ECG177	0200
CR313	1N60	IP20-0060	1N60	PTC206	HEPR9135	RE 47	SK3088	RT-263	ECG109	1N60
CR314	WG-713	IP20-0145	GE-300	PTC214	HEPR0602	RE 52	SK3100	RT-218	ECG177	0200
CR315	1N60	IP20-0060	1N60	PTC206	HEPR9135	RE 47	SK3088	RT-263	ECG109	1N60
CR316	1N60	IP20-0060	1N60	PTC206	HEPR9135	RE 47	SK3088	RT-263	ECG109	1N60
CR317	1N60	IP20-0D60	1N60	PTC206	HEPR9135	RE 47	SK3088	RT-263	ECG109	1N60
CR318	1N60	IP20-0060	1N60	PTC206	HEPR9135	RE 47	SK3088	RT-263	ECG109	1N60
CR319	WG-713	IP20-0145	GE-300	PTC214	HEPR0602	RE 52	SK3100	RT-218	ECG177	D200
CR320	WG-713	IP20-0145	GE-300	PTC214	HEPR0602	RE 52	SK3100	RT-218	ECG177	D200
CR321	WG-713	IP20-0145	GE-300	PTC214	HEPR0602	RE 52	SK3100	RT-218	ECG177	D200
CR322	1N60	IP20-0060	1N60	PTC206	HEPR9135	RE 47	SK3088	RT-263	ECG109	1N60
CR323	1N60	IP20-0060	1N60	PTC206	HEPR9135	RE 47	SK3088	RT-263	ECG109	1N60
CR325	1N60	IP20-0060	1N60	PTC206	HEPR9135	RE 47	SK3088	RT-263	ECG109	1N60
CR401	1N60P	IP20-0016	1N60	PTC206	HEPR9135	RE 47	SK3088	RT-263	ECG109	1N60
CR402	1N60P	IP20-0016	1N60	PTC206	HEPR9135	RE 47	SK3088	RT-263	ECG109	1N60
CR403	1N60P	IP20-0016	1N60	PTC206	HEPR9135	RE 47	SK3088	RT-263	ECG109	1N60
CR404	1N60P	IP20-0016	1N60	PTC206	HEPR9135	RE 47	SK3088	RT-263	ECG109	1N60
CR405	WG-713	IP20-0145	GE-300	PTC214	HEPR0602	RE 52	SK3100	RT-218	ECG177	D200
CR501	1N60	IP20-0060	1N60	PTC206	HEPR9135	RE 47	SK3088	RT-263	ECG109	1N60
CR601	1N60	IP20-0060	1N60	PTC206	HEPR9135	RE 47	SK3088	RT-263	ECG109	1N60
CR602	WG-713	IP20-0145	GE-300	PTC214	HEPR0602	RE 52	SK3100	RT-218	ECG177	D200
CR603	1N60	IP20-0060	1N60	PTC206	HEPR9135	RE 47	SK3088	RT-263	ECG109	1N60
CR604	1N60	IP20-0060	1N60	PTC206	HEPR9135	RE 47	SK3088	RT-263	ECG109	1N60
CR701	1N4004	IP20-0025	GE-504A	PTC201	HEPR0053	RE 49	SK3016	RT-214	ECG116	5A4D
CR702	BZ090 (9.0 Volt 5% Zener)	IP20-0019	GEZD-9.1	ZB9.1B				RT-240	ECG139	
CR703	BZ090 (9.0 Volt 5% Zener)	IP20-0019	GEZD-9.1	ZB9.1B				RT-240	ECG139	
CR704	BZ090 (9.0 Volt 5% Zener)	IP20-0019	GEZD-9.1	ZB9.1B				RT-240	ECG139	
CR705	UD5B	IP2D-0164	GE-512	PTC204	HEPR0092	RE 92	SK3051	RT-201	ECG156	
CR706	UD5B	IP20-0164	GE-512	PTC204	HEPR0092	RE 92	SK3051	RT-201	ECG156	
CR707	UD5B	IP20-0164	GE-512	PTC204	HEPR0092	RE 92	SK3051	RT-201	ECG156	
CR708	UD5B	IP20-0164	GE-512	PTC204	HEPR0092	RE 92	SK3051	RT-201	ECG156	
CR709	BZ071 (7.1 Volt 5% Zener)	IP20-0027								
CR710	BZ071 (7.1 Volt 5% Zener)	IP20-0027								
IC501	TA7205P	IP20-0161							ECG1155	
Q1	2SC1307	IP20-0154(10)	GE-216			RE 201			ECG236	
Q2	2SC1306	IP20-0155(11)	GE-215	PTC186		RE 203			ECG235	
Q3	2SC1449	IP20-0156(12)	GE-57	PTC163	HEPS5000	RE 40	SK3054	RT-194	ECG184	TR-55
Q4	2SC710C	IP20-0002	GE-211	PTC115	HEPS0016	RE 13	SK3018	RT-105	ECG123A	(IR)2SC710
Q5	3SK41									
	3SK45B	IP20-0157(1)								
Q6	2SC710C	IP20-0002	GE-211	PTC115	HEPS0016	RE 13	SK3018	RT-105	ECG123A	(IR)2SC710
Q7	3SK41									
	3SK45B	IP20-0157(1)								
Q8	2SC710C	IP20-0002	GE-211	PTC115	HEPS0016	RE 13	SK3018	RT-105	ECG123A	(IR)2SC710
Q9	2SK41		GE-FET-2	PTC161	HEPF0021	RE 45	SK3116	RT-175	ECG132	FE-100
	2SK19	IP20-0012(1)	GE-FET-2	PTC161	HEPF0021	RE 45	SK3116	RT-175	ECG132	FE-10D
Q10	2SC710C	IP20-0002	GE-211	PTC115	HEPS0016	RE 13	SK3018	RT-105	ECG123A	(IR)2SC710
Q11	2SC710C	IP20-0002	GE-211	PTC115	HEPS0016	RE 13	SK3018	RT-105	ECG123A	(IR)2SC710
Q12	2SC710B	IP20-0001	GE-211	PTC115	HEPS0016	RE 13	SK3018	RT-105	ECG123A	(IR)2SC710
Q13	3SK41									
	3SK45B	IP20-0157(1)								

(CONTINUED ON PAGE 62)

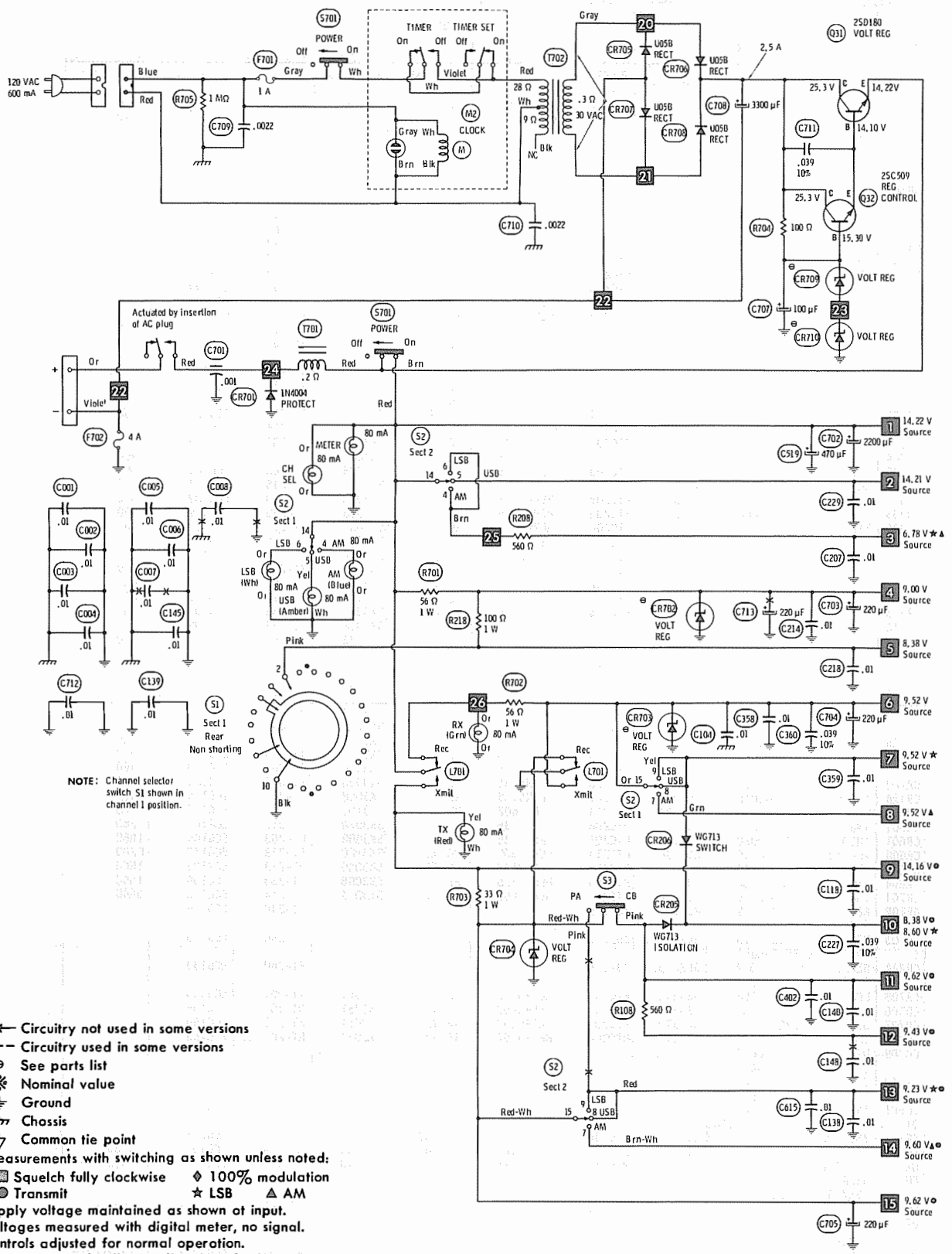

—✕— Circuitry not used in some versions
– – – Circuitry used in some versions
⊖ See parts list
❋ Nominal value
⏚ Ground
Chassis
▽ Common tie point

Measurements with switching as shown unless noted:
■ Squelch fully clockwise ◆ 100% modulation
● Transmit ★ LSB △ AM

Supply voltage maintained as shown at input.
Voltages measured with digital meter, no signal.
Controls adjusted for normal operation.
Arrow at control indicates direction of advance.
Terminal identification may not be found on unit.
Resistors are 1/2W or less, 5% unless noted.
Value in ( ) used in some versions.

A PHOTOFACT STANDARD NOTATION SCHEMATIC WITH CIRCUITRACE®

© Howard W. Sams & Co., Inc. 1976

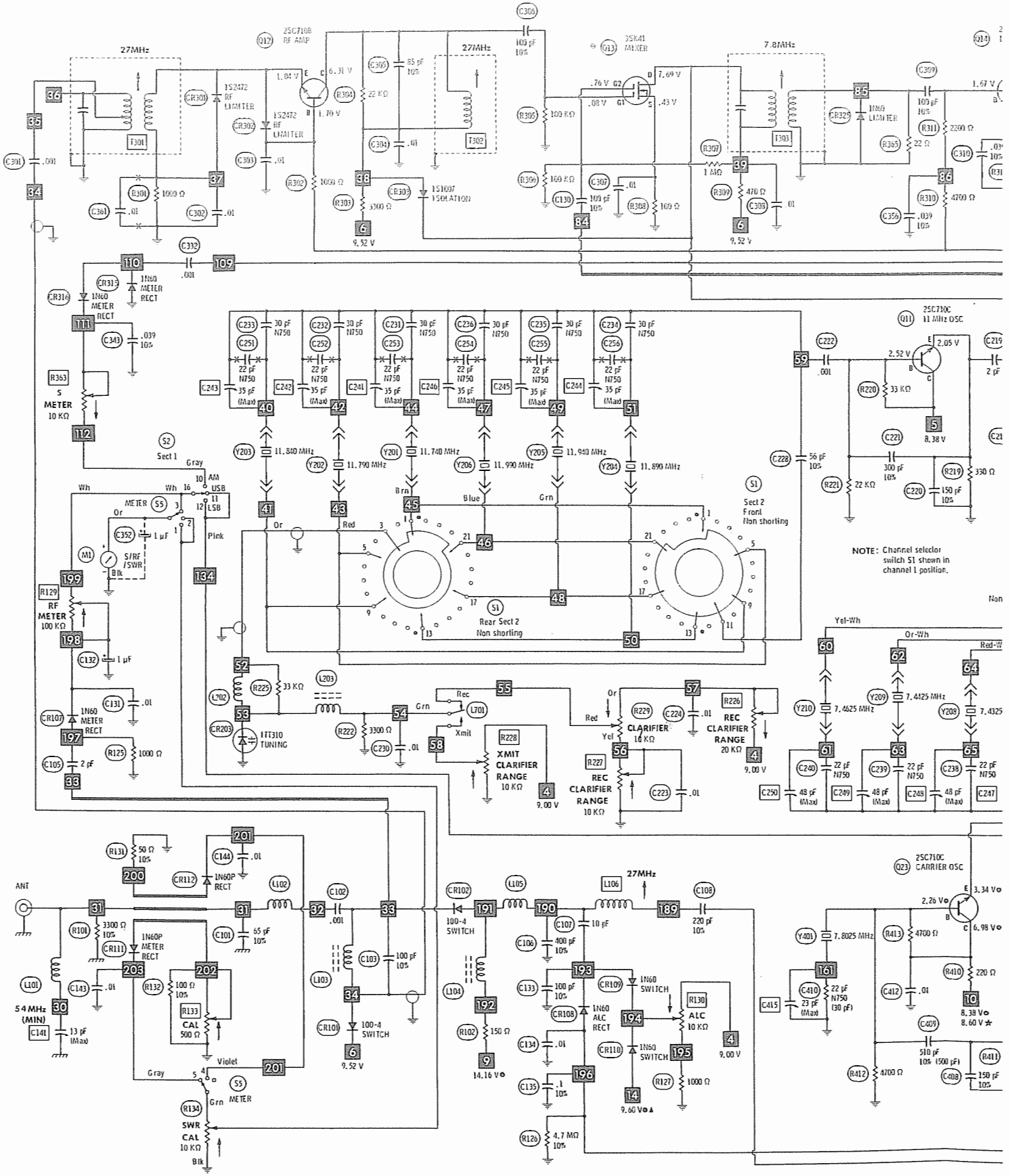
27MHz
Q12 2SC710B RF AMP
CR301 1S2472 RF LIMITER
CR302 1S2472 RF LIMITER
T301
T302
T303
C306 100 pF 10%
Q13 3SK41 MIXER
7.8MHz
CR303 1S1697 ISOLATION
CR325 1N60 LIMITER
Q14
C332 .001
CR313 1N60 METER RECT
CR316 1N60 METER RECT
C343 .039 10%
R363 S METER 10 KΩ
S2 Sect 1
Y203 11.840 MHz
Y202 11.790 MHz
Y201 11.740 MHz
Y206 11.990 MHz
Y205 11.940 MHz
Y204 11.890 MHz
S1 Sect 2 Front Non shorting
S1 Rear Sect 2 Non shorting
Q11 2SC710C 11 MHz OSC
NOTE: Channel selector switch S1 shown in channel 1 position.
M1 S/RF /SWR
R129 RF METER 100 KΩ
C132 1 µF
CR107 1N60 METER RECT
CR203 1T310 TUNING
L702
L203
L701
R225 33 KΩ
R222 3300 Ω
C230 .01
R228 XMIT CLARIFIER RANGE 10 KΩ
R229 CLARIFIER 10 KΩ
R227 REC CLARIFIER RANGE 10 KΩ
R226 REC CLARIFIER RANGE 20 KΩ
Y210 7.4625 MHz
Y209 7.4425 MHz
Y208 7.4325
ANT
R131 50 Ω 10%
CR112 1N60P RECT
L102
C102 .001
C103 100 pF 10%
CR101 100-4 SWITCH
CR102 100-4 SWITCH
L105
L106
C108 220 pF 10%
Q23 2SC710C CARRIER OSC
Y401 7.8025 MHz
R101 3300 Ω 10%
CR111 1N60P METER RECT
C101 65 pF 10%
L101
C143 .01
C141 13 pF (Max)
54 MHz (MIN)
R132 100 Ω 10%
R133 CAL 500 Ω
Violet
Gray
S5 METER
R134 SWR CAL 10 KΩ
C144 .01
C106 400 pF 10%
C107 10 pF
C133 100 pF 10%
CR108 1N60 ALC RECT
CR109 1N60 SWITCH
CR110 1N60 SWITCH
R130 ALC 10 KΩ
R127 1000 Ω
R126 4.7 MΩ 10%
C134 .01
C135 .1 10%
R102 150 Ω
C415 23 pF (Max)
C410 22 pF N750 (30 pF)
R413 4700 Ω
R410 220 Ω
C412 .01
C409 510 pF 10% (500 pF)
R412 4700 Ω
C408 150 pF 10%
8.38 V
8.60 V

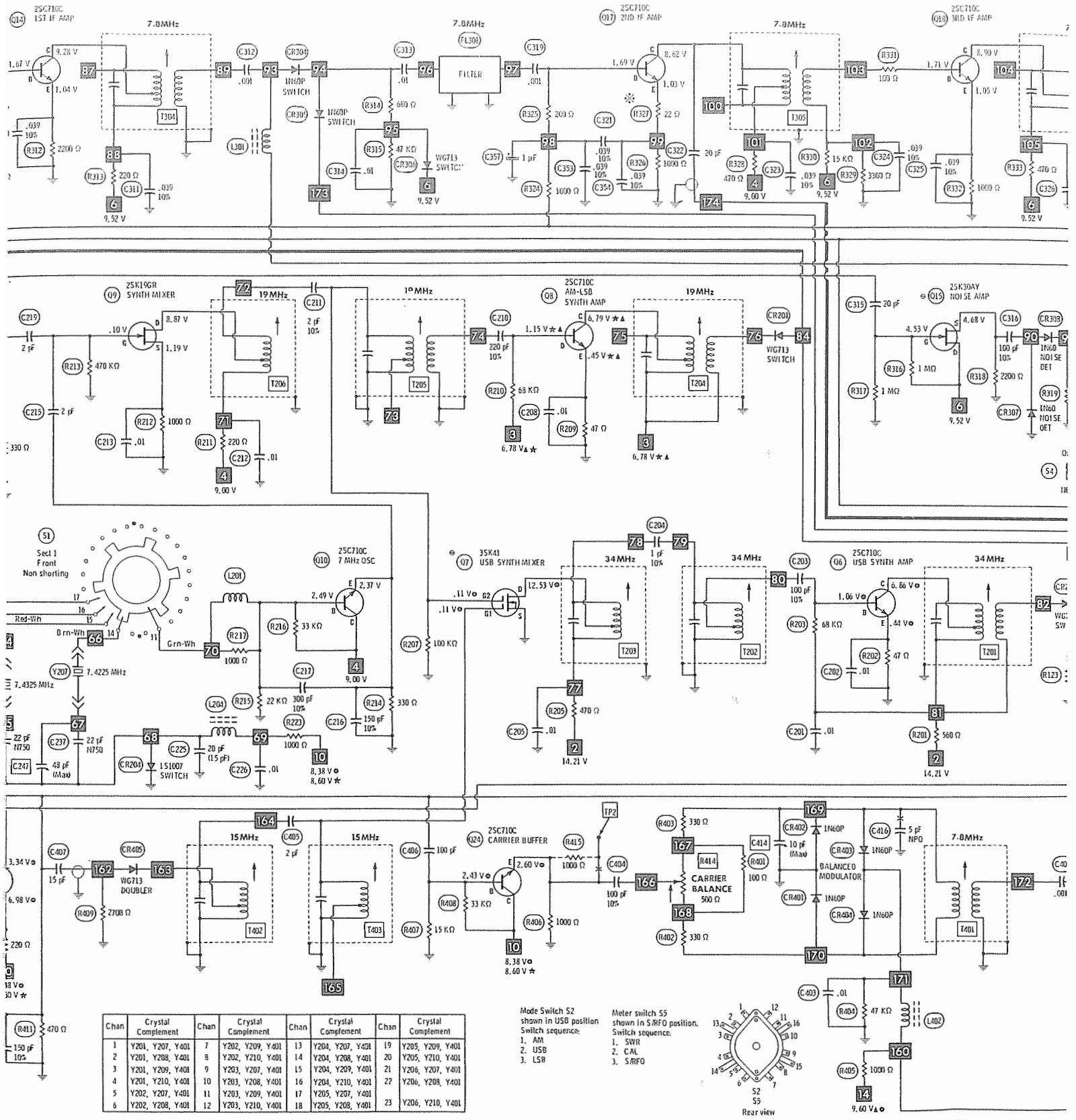

Chan	Crystal Complement	Chan	Crystal Complement	Chan	Crystal Complement	Chan	Crystal Complement
1	Y201, Y207, Y401	7	Y202, Y209, Y401	13	Y204, Y207, Y401	19	Y205, Y209, Y401
2	Y201, Y208, Y401	8	Y202, Y210, Y401	14	Y204, Y208, Y401	20	Y205, Y210, Y401
3	Y201, Y209, Y401	9	Y203, Y207, Y401	15	Y204, Y209, Y401	21	Y206, Y207, Y401
4	Y201, Y210, Y401	10	Y203, Y208, Y401	16	Y204, Y210, Y401	22	Y206, Y208, Y401
5	Y202, Y207, Y401	11	Y203, Y209, Y401	17	Y205, Y207, Y401		
6	Y202, Y208, Y401	12	Y203, Y210, Y401	18	Y205, Y208, Y401	23	Y206, Y210, Y401

Mode Switch S2 shown in USB position
Switch sequence:
1. AM
2. USB
3. LSB

Meter switch S5 shown in S/RFO position.
Switch sequence:
1. SWR
2. CAL
3. S/RFO

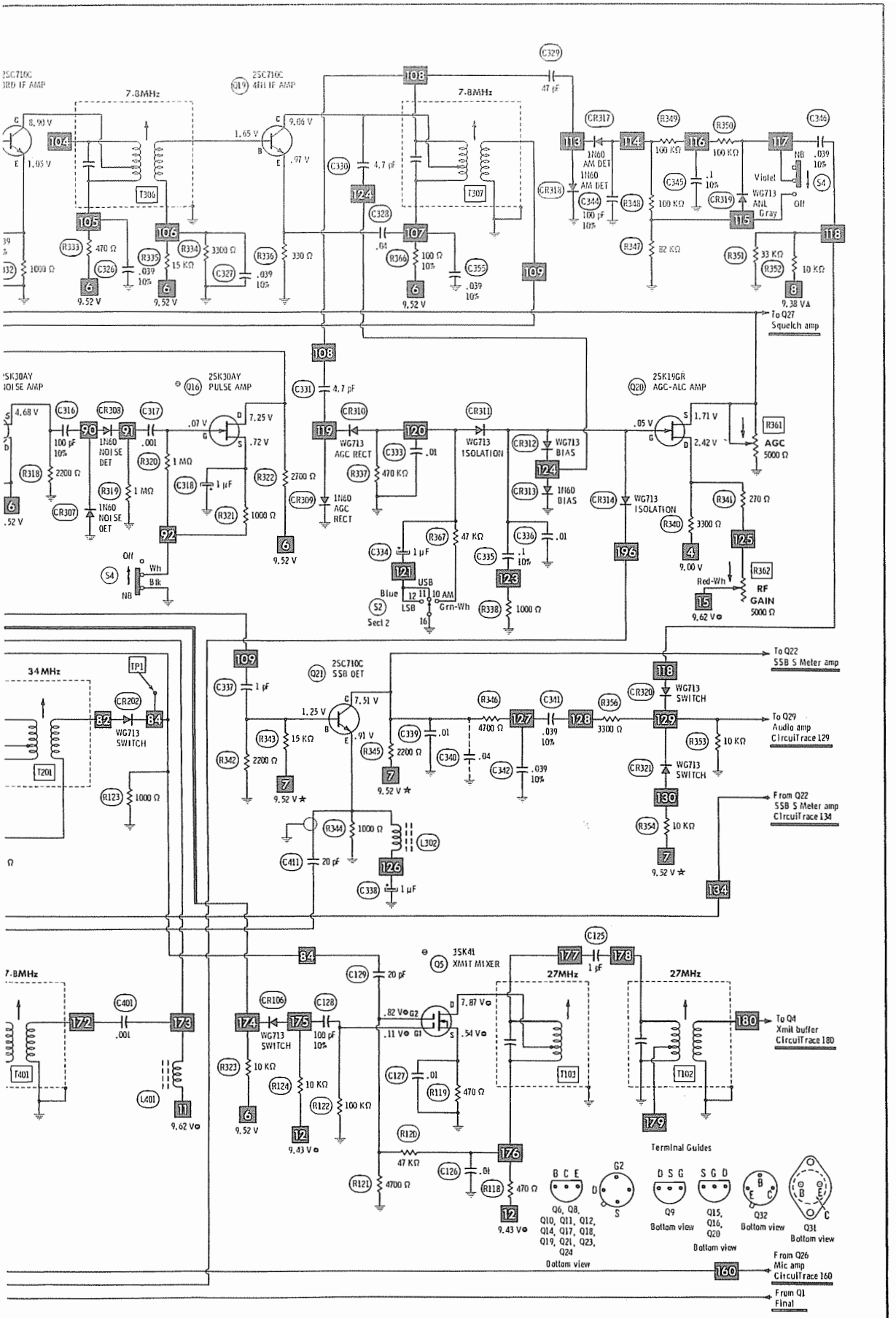

PACE MODEL SIDETALK 1000B

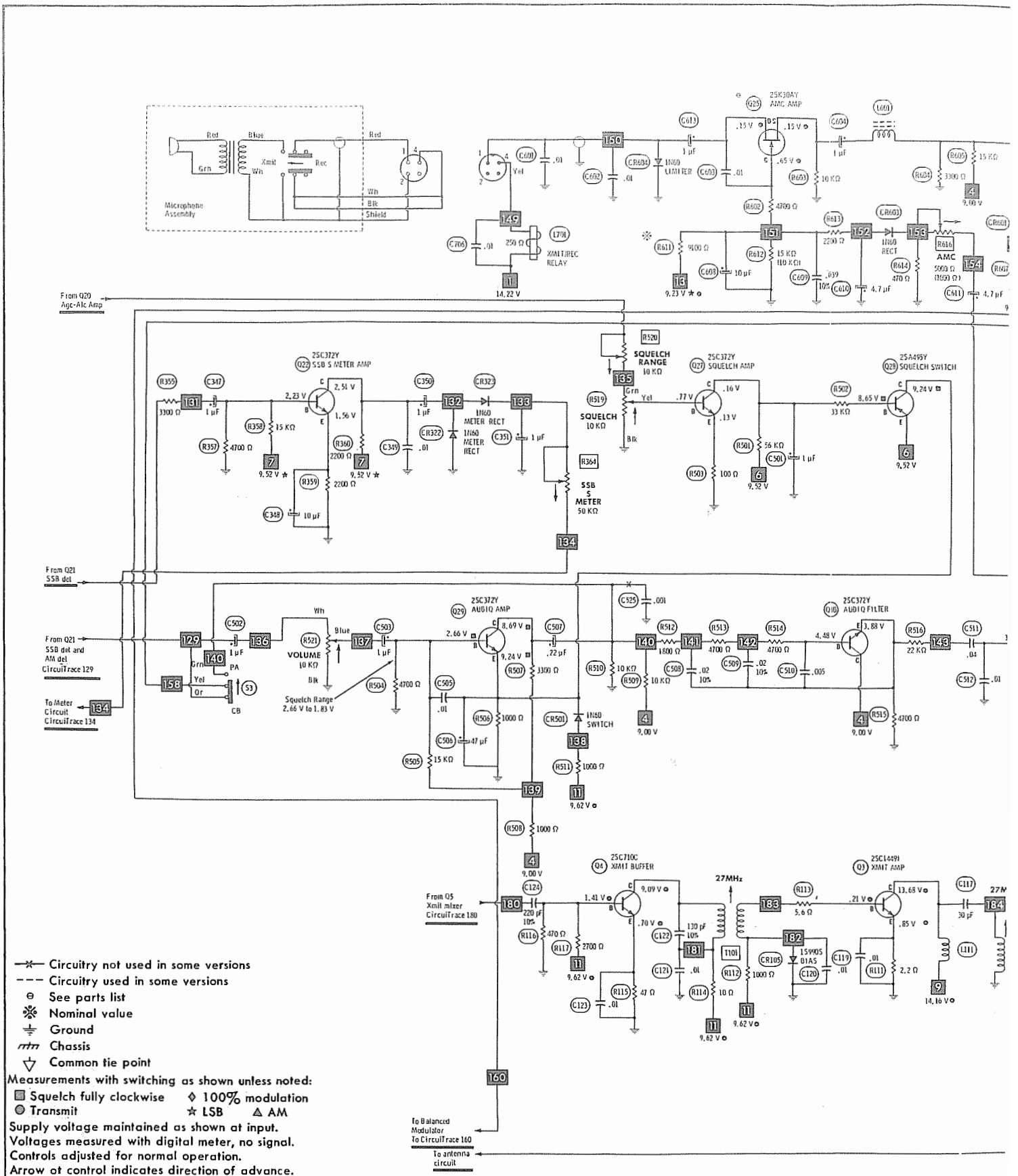

Circuitry not used in some versions
Circuitry used in some versions
See parts list
Nominal value
Ground
Chassis
Common tie point

Measurements with switching as shown unless noted:
Squelch fully clockwise — 100% modulation
Transmit — LSB — AM

Supply voltage maintained as shown at input.
Voltages measured with digital meter, no signal.
Controls adjusted for normal operation.
Arrow ot control indicates direction of advance.
Terminal identification may not be found on unit.
Resistors are 1/2W or less, 5% unless noted.
Value in ( ) used in some versions.

A PHOTOFACT STANDARD NOTATION SCHEMATIC WITH CIRCUITRACE®

© Howard W. Sams & Co., Inc. 1976

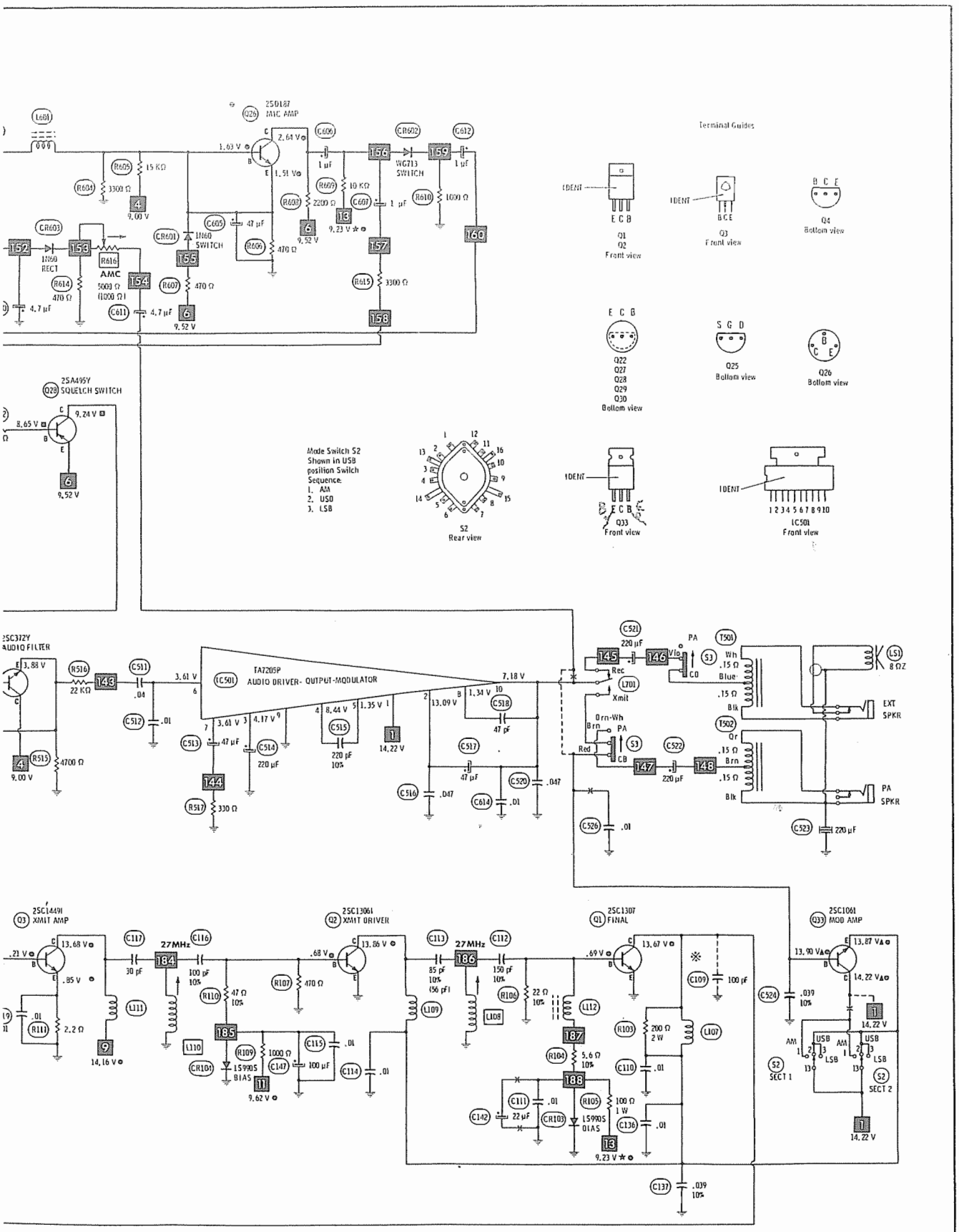
2SD187
Q26
MIC AMP
L601
R605
15 KΩ
R604
3300 Ω
CR603
1N60
RECT
R614
470 Ω
4.7 µF
R616
AMC
5000 Ω
(1000 Ω)
C611
4.7 µF
CR601
1N60
SWITCH
C605
47 µF
R606
470 Ω
R607
470 Ω
R608
2200 Ω
R609
10 KΩ
C607
1 µF
C606
1 µF
CR602
WG713
SWITCH
C612
1 µF
R610
1000 Ω
R615
3300 Ω
2SA495Y
Q28
SQUELCH SWITCH
Mode Switch S2
Shown in USB
position Switch
Sequence:
1. AM
2. USB
3. LSB
S2
Rear view
Terminal Guides
IDENT
E C B
Q1
Q2
Front view
B C E
Q3
Front view
B C E
Q4
Bottom view
E C B
Q22
Q27
Q28
Q29
Q30
Bottom view
S G D
Q25
Bottom view
Q26
Bottom view
Q33
Front view
IC501
Front view
2SC372Y
AUDIO FILTER
R516
22 KΩ
C511
.04
C512
.01
FA7205P
AUDIO DRIVER- OUTPUT-MODULATOR
IC501
C513
47 µF
C514
220 µF
C515
220 pF
10%
R517
330 Ω
C516
.047
C517
47 µF
C518
47 pF
C520
.047
C614
.01
R515
4700 Ω
C521
220 µF
L701
Rec
Xmit
Orn-Wh
Brn
Red
PA
CB
C522
220 µF
C526
.01
T501
T502
Wh
.15 Ω
Blue
.15 Ω
Blk
Or
.15 Ω
Brn
.15 Ω
Blk
LS1
8 ΩZ
EXT
SPKR
PA
SPKR
C523
220 µF
2SC1449I
Q3
XMIT AMP
C117
30 pF
C116
100 pF
10%
R110
47 Ω
10%
L111
R111
2.2 Ω
L110
CR104
1S990S
BIAS
R109
1000 Ω
C147
100 µF
C115
.01
C114
.01
2SC1306I
Q2
XMIT DRIVER
R107
470 Ω
C113
85 pF
10%
(56 pF)
C112
150 pF
10%
L109
L108
R106
22 Ω
10%
2SC1307
Q1
FINAL
L112
R103
200 Ω
2 W
L107
C109
100 pF
C110
.01
R104
5.6 Ω
10%
C111
.01
C142
22 µF
R105
100 Ω
1 W
CR103
1S990S
BIAS
C136
.01
C137
.039
10%
2SC1061
Q33
MOD AMP
C524
.039
10%
AM
USB
LSB
S2
SECT 1
S2
SECT 2
27MHz
184
185
186
187
188
145
146
147
148
143
144
1
9
11
13
4
6

SEMICONDUCTORS (Select replacement transistor for best results)(cont)

ITEM No.	TYPE No.	MFGR. PART No.	REPLACEMENT DATA							
			GENERAL ELECTRIC PART No.	MALLORY PART No.	MOTOROLA PART No.	RAYTHEON PART No.	RCA PART No.	SPRAGUE PART No.	SYLVANIA PART No.	WORKMAN PART No.
Q14	2SC710C	IP20-0002	GE-211	PTC115	HEPS0016	RE 13	SK3018	RT-105	ECG123A	(IR)2SC710
Q15	2SK30AY	IP20-0078	GE-FET-2	PTC161	HEPF0021	RE 45	SK3116	RT-175	ECG132	FE-100
Q16	2SK30AY	IP20-0078	GE-FET-2	PTC161	HEPF0021	RE 45	SK3116	RT-175	ECG132	FE-100
Q17	2SC710C	IP20-0002	GE-211	PTC115	HEPS0016	RE 13	SK3018	RT-105	ECG123A	(IR)2SC710
Q18	2SC710C	IP20-0002	GE-211	PTC115	HEPS0016	RE 13	SK3018	RT-105	ECG123A	(IR)2SC710
Q19	2SC710C	IP20-0002	GE-211	PTC115	HEPS0016	RE 13	SK3018	RT-105	ECG123A	(IR)2SC710
Q20	2SK34		GE-FET-2	PTC161	HEPF0021	RE 45	SK3116	RT-175	ECG132	FE-100
	2SK19GR	IP20-0012(1)	GE-FET-2	PTC161	HEPF0021	RE 45	SK3116	RT-175	ECG132	FE-100
Q21	2SC710C	IP20-0002	GE-211	PTC115	HEPS0016	RE 13	SK3018	RT-105	ECG123A	(IR)2SC710
Q22	2SC372Y	IP20-0006	GE-210	PTC139	HEPS0015	RE 13	SK3122	RT-105	ECG123A	(IR)2SC372
Q23	2SC710C	IP20-0002	GE-211	PTC115	HEPS0016	RE 13	SK3018	RT-105	ECG123A	(IR)2SC710
Q24	2SC710C	IP20-0002	GE-211	PTC115	HEPS0016	RE 13	SK3018	RT-105	ECG123A	(IR)2SC710
Q25	2SK30AY	IP20-0078	GE-FET-2	PTC161	HEPF0021	RE 45	SK3116	RT-175	ECG132	FE-100
Q26	2SD187Y	IP20-0160	GE-59	PTC134	HEPG0011	RE 6	SK3010	RT-119	ECG103A	TR-08
Q27	2SC372Y	IP20-0006	GE-210	PTC139	HEPS0015	RE 13	SK3122	RT-105	ECG123A	(IR)2SC372
Q28	2SA495Y	IP20-0159	GE-21	PTC103	HEPS0019	RE 26	SK3118	RT-106	ECG159	TR-52
Q29	2SC372Y	IP20-0006	GE-210	PTC139	HEPS0015	RE 13	SK3122	RT-105	ECG123A	(IR)2SC372
Q30	2SC372Y	IP20-0006	GE-210	PTC139	HEPS0015	RE 13	SK3122	RT-105	ECG123A	(IR)2SC372
Q31	2SD180	IP20-0028	GE-75	PTC140	HEPS7002	RE 29	SK3027	RT-131	ECG223	TR-59
Q32	2SC509	IP20-0165	GE-81	PTC136	HEPS0014	RE 17	SK3024	RT-172	ECG128	TR-21
Q33	2SC1061C	(13)	GE-66	PTC110	HEPS5027	RE 21	SK3054	RT-197	ECG152	TR-76

(1) Used in some versions.
(10) Rating, 25 watt @ 8.0 amp.
(11) Rating, 12 watt @ 3.0 amp.
(12) Rating, 5.0 watt @ 3.0 amp.
(13) Rating, 25 watt @ 3.0 amp.

ELECTROLYTIC CAPACITORS

ITEM No.	RATING	REPLACEMENT DATA			
		MFGR. PART No.	CORNELL-DUBILIER PART No.	MALLORY PART No.	SPRAGUE PART No.
C132	1 50V	IP22-0001	PC1-50	MTV1CB50	EV-1615
C142	22 16V	IP22-0042	PC25-25	VTT22A16	EV-1224
C147	100 16V	IP22-0008	PC100-16	VTT100F16	EV-1230
C318	1 50V	IP22-0001	PC1-50	MTV1CB50	EV-1615
C334	1 50V	IP22-0001	PC1-50	MTV1CB50	EV-1615
C338	1 50V	IP22-0001	PC1-50	MTV1CB50	EV-1615
C347	1 50V	IP22-0001	PC1-50	MTV1CB50	EV-1615
C348	10 16V	IP22-0004	PC10-25	VTT10A25	EV-1222
C350	1 50V	IP22-0001	PC1-50	MTV1CB50	EV-1615
C351	1 50V	IP22-0001	PC1-50	MTV1CB50	EV-1615
C352	1 50V	IP22-0001	PC1-50	MTV1CB50	EV-1615
C357	1 50V	IP22-0001	PC1-50	MTV1CB50	EV-1615
C501	1 50V	IP22-0001	PC1-50	MTV1CB50	EV-1615
C502	1 50V	IP22-0001	PC1-50	MTV1CB50	EV-1615
C503	1 50V	IP22-0001	PC1-50	MTV1CB50	EV-1615
C506	47 16V	IP22-0006	PC50-16	VTT47D16	EV-1226
C507	.22 50V	IP22-0044		TDC224M050EL	SD50-R229
C513	47 16V	IP22-0006	PC50-16	VTT47D16	EV-1226
C514	220 16V	IP22-0009	PC250-25	VTT220G16	EV-1240
C517	47 16V	IP22-0006	PC50-16	VTT47D16	EV-1226
C519	470 16V	IP22-0010	PC500-16	VTT470J16	EV-1250
C521	220 16V	IP22-0009	PC250-25	VTT220G16	EV-1240
C522	220 16V	IP22-0009	PC250-25	VTT220G16	EV-1240
C523	220 16V NP				
C604	1 50V	IP22-0001	PC1-50	MTV1CB50	EV-1615
C605	47 16V	IP22-0006	PC50-16	VTT47D16	EV-1226
C606	1 50V	IP22-0001	PC1-50	MTV1CB50	EV-1615
C607	1 50V	IP22-0001	PC1-50	MTV1CB50	EV-1615
C608	10 16V	IP22-0004	PC10-25	VTT10A25	EV-1222
C610	4.7 16V	IP22-0003	PC5-50	VTT4R7A50	EV-1319
C611	4.7 16V	IP22-0003	PC5-50	VTT4R7A50	EV-1319
C612	1 50V	IP22-0001	PC1-50	MTV1CB50	EV-1615
C613	1 50V	IP22-0001	PC1-50	MTV1CB50	EV-1615
C702	2200 16V	IP22-0043	WBR2000-16	TC1520C	TVA-1175.3
C703	220 16V	IP22-0009	PC250-25	VTT220G16	EV-1240
C704	220 16V	IP22-0009	PC250-25	VTT220G16	EV-1240
C705	220 16V	IP22-0009	PC250-25	VTT220G16	EV-1240
C707	100 16V	IP-0008	PC100-16	VTT100F16	EV-1230
C708	3300 35V	IP22-0039			
C713	220 16V	IP22-0009	PC250-25	VTT220G16	EV-1240

CAPACITORS

ITEM No.	RATING	MFGR. PART No.	REPLACEMENT DATA			
			CENTRALAB PART No.	CORNELL-DUBILIER PART No.	MALLORY PART No.	SPRAGUE PART No.
C001	.01		DC-103	GP10000	MAG5011	2SS-S10
C002	.01			OPMS6056	PVC6256	6PS-D56
C003	.047		DC-503	MGP05	MAG5015	TGL-S50
C004	.01		DC-103	GP10000	MAG5011	2SS-S10
C005	.01		DC-103	GP10000	MAG5011	2SS-S10
C006	.01		DC-103	GP10000	MAG5011	2SS-S10
C007	.01		DC-103	GP10000	MAG5011	2SS-S10
C008	.01		DC-103	GP10000	MAG5011	2SS-S10
C101	65 10%			CD6ED680J03	SX468	424MC68R0J501
C102	.001		DD-102	GP1000	GP210	2SS-D10
C103	100 10%			CD10F0101J03	SX310	424MC1000J501
C104	.01		DC-103	GP10000	MAG5011	2SS-S10
C105	2		DTZ-2R2	NP02P2	CN0522	10TCC-V22
C106	400 10%			CD15F0391J03	SX339	424ME3900J501
C107	10			CD6CD100D03		
C108	220 10%			CD10F0221J03	SX322	424ME2200J501
C109	100			CD10F0101J03	SX310	424MC10D0J501
C110	.01		DC-103	GP10000	MAG5011	2SS-S10
C111	.01		DC-103	GP10000	MAG5011	2SS-S10
C112	150 10%			CD7FD151J03	SX315	424MC1500J501
C113	85 10%			CD10ED820J03	SX482	424MC82R0J501
C114	.01		DC-103	GP10000	MAG5011	2SS-S10
C115	.01		DC-103	GP10000	MAG5011	2SS-S10
C116	100 10%			CD10F0101J03	SX310	424MC1000J501
C117	30			CD6ED300J03	SX430	
C118	.01		DC-103	GP10000	MAG5011	2SS-S10
C119	.01		DC-103	GP10000	MAG5011	2SS-S10
C120	.01		DC-103	GP10000	MAG5011	2SS-S10
C121	.01		DC-103	GP10000	MAG5011	2SS-S10
C122	130 10%			CD7FD131J03	SX313	424MC1300J501
C123	.01		DC-103	GP10000	MAG5011	2SS-S10
C124	220 10%			CD10F0221J03	SX322	424ME2200J501
C125	1				CN0510	10TCC-V10
C126	.01		DC-103	GP10000	MAG5011	2SS-S10
C127	.01		DC-103	GP10000	MAG5011	2SS-S10
C128	100 10%			CD10FD101J03	SX310	424MC1000J501
C129	20			CD6CD200J03	SX420	
C130	100 10%			CD10F0101J03	SX310	424MC1000J501
C131	.01		DC-103	GP10000	MAG5011	2SS-S10
C133	100 10%			CD10F0101J03	SX310	424MC1000J501
C134	.01		DC-103	GP10000	MAG5011	2SS-S10
C135	.1 10%			OPMS2P1	EWF1A010	1PB-P10
C136	.01		DC-103	GP10000	MAG5011	2SS-S10
C137	.039			OPMS6S39	PVC6139	6PS-S39
C138	.01		DC-103	GP10000	MAG5011	2SS-S10
C139	.01		DC-103	GP10000	MAG5011	2SS-S10
C140	.01		DC-103	GP10000	MAG5011	2SS-S10
C141	30 MAX	IP22-0021				
C143	.01		DC-103	GP10000	MAG5011	2SS-S10
C144	.01		DC-103	GP10000	MAG5011	2SS-S10
C145	.01		DC-103	GP10000	MAG5011	2SS-S10
C148	.01		DC-103	GP10000	MAG5011	2SS-S10
C201	.01		DC-103	GP10000	MAG5011	2SS-S10
C202	.01		DC-103	GP10000	MAG5011	2SS-S10
C203	100 10%			CD10FD101J03	SX310	424MC1000J501
C204	1 10%				CN0510	10TCC-V10
C205	.01		DC-103	GP10000	MAG5011	2SS-S10
C207	.01		DC-103	GP10000	MAG5011	2SS-S10
C208	.01		DC-103	GP10000	MAG5011	2SS-S10
C210	220 10%			CD10FD221J03	SX322	424ME2200J501
C211	2 10%		DTZ-2R2	NP02P2	CN0522	10TCC-V22
C212	.01		DC-103	GP10000	MAG5011	2SS-S10
C213	.01		DC-103	GP10000	MAG5011	2SS-S10
C214	.01		DC-103	GP10000	MAG5011	2SS-S10
C215	2		DTZ-2R2	NP02P2	CN0522	10TCC-V22
C216	150 10%			CD7FD151J03	SX315	424MC1500J501
C217	300 10%			CD15FD301J03	SX330	424ME3000J501
C318	.01		DC-103	GP10000	MAG5011	2SS-S10
C219	2		DTZ-2R2	NP02P2	CN0522	10TCC-V22
C220	150 10%			CD7FD151J03	SX315	424MC1500J501
C221	300 10%			CD15FD301J03	SX330	424ME3000J501
C222	.01		DC-103	GP10000	MAG5011	2SS-S10
C223	.01		DC-103	GP1D000	MAG5011	2SS-S10
C224	.01		DC-103	GP10000	MAG5011	2SS-S10
C225	20			CD6CD200J03	SX420	
C226	.01		DC-103	GP10000	MAG5011	2SS-S10
C227	.039 10%			DPMS6S39	PVC6139	6PS-S39
C228	56 10%			CD6ED560J03	SX456	424MC56R0J501
C229	.01		DC-103	GP10000	MAG5011	2SS-S10
C230	.01		DC-103	GP10000	MAG5011	2SS-S10
C231	30 N750		DTN-33	N33	CN7433	10TCU-Q33
C232	30 N750		DTN-33	N33	CN7433	10TCU-Q33

CAPACITORS (cont)

ITEM No.	RATING	MFGR. PART No.	REPLACEMENT DATA			
			CENTRALAB PART No.	CORNELL-DUBILIER PART No.	MALLORY PART No.	SPRAGUE PART No.
C233	30 N750		OTN-33	N33	CN7433	10TCU-Q33
C234	30 N750		OTN-33	N33	CN7433	10TCU-Q33
C235	30 N750		OTN-33	N33	CN7433	10TCU-Q33
C236	30 N750		OTN-33	N33	CN7433	10TCU-Q33
C237	22 N750		OTN-22	N22	CN7422	10TCU-Q22
C238	22 N750		DTN-22	N22	CN7422	10TCU-Q22
C239	22 N750		OTN-22	N22	CN7422	10TCU-Q22
C240	22 N750		OTN-22	N22	CN7422	10TCU-Q22
C241	35 MAX					
C242	35 MAX					
C243	35 MAX					
C244	35 MAX					
C245	35 MAX					
C246	35 MAX					
C247	48 MAX					
C248	48 MAX					
C249	48 MAX					
C250	48 MAX					
C251	22 N750		OTN-22	N22	CN7422	10TCU-Q22
C252	22 N750		OTN-22	N22	CN7422	10TCU-Q22
C253	22 N750		OTN-22	N22	CN7422	10TCU-Q22
C254	22 N750		OTN-22	N22	CN7422	10TCU-Q22
C255	22 N750		OTN-22	N22	CN7422	10TCU-Q22
C256	22 N750		OTN-22	N22	CN7422	10TCU-Q22
C301	.001		00-821	GP820	GP382	10TS-T82
C302	.01		0C-103	GP10000	MAG5011	2SS-S10
C303	.01		0C-103	GP10000	MAG5011	2SS-S10
C304	.01		DC-103	GP10000	MAG5011	2SS-S10
C305	85 10%			C010ED820J03	SX482	424MC82R0J501
C306	100 10%			C010F0101J03	SX310	424MC1000J501
C307	.01		DC-103	GP10000	MAG5011	2SS-S10
C308	.01		0C-103	GP10000	MAG5011	2SS-S10
C309	100 10%			C010F0101J03	SX310	424MC1000J501
C310	.039 10%			DPMS6S39	PVC6139	6PS-S39
C311	.039 10%			DPMS6S39	PVC6139	6PS-S39
C312	.001		DD-821	GP820	GP382	10TS-T82
C313	.01		DC-103	GP10000	MAG5011	2SS-S10
C314	.01		DC-103	GP10000	MAG5011	2SS-S10
C315	20			CD6CD200J03	SX420	
C316	100 10%			CD10F0101J03	SX310	424MC1000J501
C317	.001		DD-821	GP820	GP382	10TS-T82
C319	.001		0D-821	GP820	GP382	10TS-T82
C321	.039 10%			DPMS6S39	PVC6139	6PS-S39
C322	20			CD6CD200J03	SX420	
C323	.039 10%			0PMS6S39	PVC6139	6PS-S39
C324	.039 10%			0PMS6S39	PVC6139	6PS-S39
C325	.039 10%			DPMS6S39	PVC6139	6PS-S39
C326	.059 10%			DPMS6S39	PVC6139	6PS-S39
C327	.039 10%			DPMS6S39	PVC6139	6PS-S39
C328	.04			0PMS2S47	EWF1A147	1PB-S47
C329	47			CD6ED470J03	SX447	424MC47R0J501
C330	4.7			C06CD050D03		
C331	4.7			CD6CD050D03		
C332	.001		D0-821	GP820	GP382	10TS-T82
C333	.01		0C-103	GP10000	MAG5011	2SS-S10
C335	.1 10%			0PMS2P1	EWF1A010	1PB-P10
C336	.01		DC-103	GP10000	MAG5011	2SS-S10
C337	1				CN0510	10TCC-V10
C339	.01		DC-103	GP10000	MAG5011	2SS-S10
C340	.04				GP140	5GA-S40
C341	.30 10%			0PMS6S39	PVC6139	6PS-S39
C342	.039 10%			0PMS6S39	PVC6139	6PS-S39
C343	.039 10%			DPMS6S39	PVC6139	6PS-S39
C344	100 10%			CD10FD101J03	SX310	424MC1000J501
C345	.1 10%			0PMS2P1	EWF1A010	1PB-P10
C346	.039 10%			0PMS6S39	PVC6139	6PS-S39
C349	.01		DC-103	GP10000	MAG5011	2SS-S10
C353	.039 10%			DPMS6S39	PVC6139	6PS-S39
C354	.039 10%			DPMS6S39	PVC6139	6PS-S39
C355	.039 10%			0PMS6S39	PVC6139	6PS-S39
C356	.039 10%			0PMS6S39	PVC6139	6PS-S39
C358	.01		DC-103	GP10000	MAG5011	2SS-S10
C359	.01		0C-103	GP10000	MAG5011	2SS-S10
C360	.039 10%			0PMS6S39	PVC6139	6PS-S39
C361	.01		DC-103	GP10000	MAG5011	2SS-S10
C401	.001		00-821	GP820	GP382	10TS-T82
C402	.01		DC-103	GP10000	MAG5011	2SS-S10
C403	.01		DC-103	GP10000	MAG5011	2SS-S10
C404	100 10%			CD10FD101J03	SX310	424MC1000J501
C405	2		DTZ-2R2	NP02P2	CN0522	10TCC-V22
C406	100			CD10F0101J03	SX310	424MC1000J501

CAPACITORS (cont)

ITEM No.	RATING	MFGR. PART No.	REPLACEMENT DATA			
			CENTRALAB PART No.	CORNELL-DUBILIER PART No.	MALLORY PART No.	SPRAGUE PART No.
C407	15			CD6CD150J03		
C408	150 10%			CO7FD151J03	SX315	424MC1500J501
C409	510 10%			CD15FD511J03	SX351	424ME5100J501
C410	22 N750		DTN-22	N22	CN7422	10TCU-Q22
C411	20		DTZ-20	NP020	CN0420	10TCC-Q20
C412	.01		DC-103	GP10000	MAG5011	2SS-S10
C414	10 MAX	IP22-0045				
C415	23 MAX	IP22-0020				
C416	5 NPO					10TCC-V50
C505	.01		DC-103	GP10000	MAG5011	2SS-S10
C508	.02 10%			DPMS2S2	PVC212	2PS-S20
C509	.02 10%			DPMS2S2	PVC212	2PS-S20
C510	.005			DPMS605	EWF1A250	6PS-050
C511	.04			DPMS6S39	PVC6139	6PS-S39
C512	.01			DPMS4S1	EWF1A110	1PB-S10
C515	220 10%			CD10FD221J03	SX322	424ME2200J501
C516	.047			DPMS2S47	EWF1A147	1PB-S47
C518	47			CD6E0470J03	SX447	424MC47R0J501
C520	.047			DPMS2S47	EWF1A147	1PB-S47
C524	.039 10%			DPMS6S39	PVC6139	6PS-S39
C525	.001		DD-821	GP820	GP382	10TS-T82
C526	.01		DC-103	GP10000	MAG5011	2SS-S10
C601	.01		DC-103	GP10000	MAG5011	2SS-S10
C602	.01		DC-103	GP100DD	MAG5011	2SS-S10
C603	.01		DC-103	GP10000	MAG5011	2SS-S10
C609	.039 10%			DPMS6S39	PVC6139	6PS-S39
C614	.01		DC-103	GP10D00	MAG5011	2SS-S10
C615	.01		DC-103	GP10000	MAG5011	2SS-S10
C701	.001					
C706	.01		DC-103	GP10000	MAG5011	2SS-S10
C709	.0022		DD-222		GP222	2SS-022
C710	.0022		DD-222		GP222	2SS-022
C711	.039 10%			DPMS6S39	PVC6139	6PS-S39
C712	.01		DC-1D3	GP10000	MAG5011	2SS-S10

CONTROLS (All wattages 1/2 watt, or less, unless listed)

ITEM No.	FUNCTION	RESIST-ANCE	REPLACEMENT DATA				
			MFGR. PART No.	CENTRALAB PART No.	CLAROSTAT PART No.	MALLORY PART No.	TRW PART No.
R129	RF Meter	100K	IP24-0002	T-100K (2)	C-104 (2)	MTC15L1 (2)	X201R104B (2)
R130	ALC	10K	IP24-0003	T-10K	C-103	MTC14L1	X201R103B
R133	Cal	500	IP24-0012	T-500 (2)	C-501 (2)	MTC52L1 (2)	X201R501B (2)
R134	SWR CAL	10K	IP24-0043				
R226	Reg Clarifier Range	20K		T-20K	C-253	MTC24L1	X201R253B
R227	Rec Clarifier Range	10K	IP24-0005	T-10K (2)	C-103 (2)	MTC14L1 (2)	X201R103B (2)
R228	Xmit Clarifier Range	10K		T-10K (2)	C-103 (2)	MTC14L1 (2)	X201R103B (2)
	Xmit Clarifier Range	100K	IP24-0013(6)				
R229	Clarifier	10K	IP24-0042				
R361	AGC	5000	IP24-0035	T-5000 (2)	C-502 (2)	MTC53L1 (2)	X201R502B (2)
R362	RF Gain	5000	IP14-0036				
R363	S Meter	20K		T-20K	C-253	MTC24L1	X201R253B
R364	SSB S Meter	50K	IP24-0015	T-50K (2)	C-503 (2)	MTC54L1 (2)	X201R503B (2)
R414	Carrier Balance	500	IP24-0023	T-500	C-501	MTC52L1	X201R501B
R519	Squelch	10K	IP24-0043				
R520	Squelch Range	10K	IP24-0005	T-10K (2)	C-103 (2)	MTC14L1 (2)	X201R103B (2)
R521	Volume	10K	IP24-0001				
R616	AMC	5000		T-5000 (2)	C-502 (2)	MTC53L1 (2)	X201R502B (2)
	AMC	1000	IP24-0007(6)				

(2) Cut off one of the end terminals and bend to fit PC board.
(6) Alternate part, may be used in some versions.

COILS (RF-IF)

ITEM No.	FUNCTION	REPLACEMENT DATA			REMARKS
		PART No.	OTHER IDENTIFICATION	MILLER PART No.	
L101	TVI Trap (54MHz)	IP21-0071			
L102	Pi Filter (.22uH)	IP21-0098			
L103	RF Choke (150uH)	IP21-0074			
L104	RF Choke (150uH)	IP21-0074			
L105	Pi Filter	IP21-0206	C997N		
L106	Pi Filter (27MHz)	IP21-0095	C043N		
L107	RF Choke (.22uH)	IP21-0098			
L108	Xmit Dirver (27MHz)	IP21-0205	C996N		
L109	RF Choke	IP21-0071			
L110	Xmit Amp (27MHz)	IP21-0181	C979N		
L111	RF Choke	IP21-0071			
L112	RF Choke (1.2uH)	IP21-0179			
	RF Choke (5.5uH)	IP21-0101			
L202	RF Choke (8.2uH)	IP21-0180			
L203	RF Choke (470uH)	IP21-0195			
L204	Pi Filter (470uH)	IP21-0195			
L301	RF Choke (470uH)	IP21-0195			
L302	RF Choke (150uH)	IP21-0074			
L401	RF Choke (150uH)	IP21-0074			
L402	RF Choke (22uH)	IP21-0072			
L601	RF Choke				
T101	Xmit Butter (27MHz)	IP21-0093	C0420		
T102	Xmit Mixer (27MHz)	IP21-0083	C182Z		
T103	Xmit Mixer (27MHz)	IP21-0034	C181Z		
T201	USB Synth (34MHz)	IP21-0207	Z287A		
T202	USB Synth (34MHz)	IP21-0208	Z286K		
T203	USB Synth Mixer (34MHz)	IP21-0209	Z285I		
T204	AM-LSB Synth Amp(19MHz)	IP21-0210	Z284A		
T205	Harmonic Suppressor (19MHz	IP21-0087	Z188A		
T206	Synth Mixer (19MHz)	IP21-0211	Z282I		
T301	Rec Ant (27MHz)	IP21-0091	C200Z		
T302	Rec RF (27MHz)	IP21-0212	C993N		
T303	Rec Mixer (7.8MHz)	IP21-0085	S-183A		
T304	Rec Mixer (7.8MHz)	IP21-0085			
T305	Rec IF (7.8MHz)	IP21-0085			
T306	Rec IF (7.8MHz)	IP21-0085			
T307	Rec IF (7.8MHz)	IP21-0089	S-190A		
T401	Balance Mod (7.8MHz)	IP21-0092	S-111D		
T402	Carrier Osc (15MHz)	IP21-0078	Z176I		
T403	Harmonic Suppressor	IP21-0078	Z176I		

FILTER CHOKE

ITEM No.	RATINGS			REPLACEMENT DATA			NOTES
	CURRENT (Measured)	DC RES.	INDUCTANCE (0 CURRENT 1000~)	MFGR. PART No.	THORDARSON PART No.	TRIAD PART No.	
T701	2.5A	.2	2.5mH	IP21-0112 K-18 (1)			(1) Number on unit.

TRANSFORMER (Audio Output)

ITEM No.	IMPEDANCE		REPLACEMENT DATA			NOTES
	PRI.	SEC.	MFGR. PART No.	THORDARSON PART No.	TRIAD PART No.	
T501	8	8	IP21-0186 L-57 (1)			(1) Number on unit.
T502	8	8	IP21-0186 L-57 (1)			

TRANSFORMER (Power)

ITEM No.	RATING		REPLACEMENT DATA			NOTES
	PRI.	SEC. 1	MFGR. PART No.	THORDARSON PART No.	TRIAD PART No.	
T702	120V AC 600mA AC	30V AC 2.5A AC	IP21-0214 M-61 (1)			(1) Number on unit.

SPEAKER

ITEM No.	TYPE	REPLACEMENT DATA		NOTES
		MFGR. PART No.	QUAM PART No.	
SP1	2 3/4 PM 8 Ohms	IP29-0017	27A05Z8	

FUSE DEVICES

ITEM No.	DESCRIPTION	REPLACEMENT DATA						
		PART No.		BUSS PART No.		LITTELFUSE PART No.		WORKMAN PART No.
		DEVICE	HOLDER	DEVICE	HOLDER	DEVICE	HOLDER	DEVICE
F701 F702	1 Amp Fast Acting 4 Amp Fast Acting			GJV1 MTH4	HKP	318001 312004	342012AL	

CRYSTALS

ITEM No.	CRYSTAL FREQUENCY IN MHz	MFGR. PART No.	CTS KNIGHTS PART No.	CHANNEL
Y201	11.740	IP-31-0058	AYA150M11.740	1,2,3,4
Y202	11.790	IP-31-0059	AYA150M11.790	5,6,7,8
Y203	11.840	IP-31-0060	AYA150M11.840	9,10,11,12
Y204	11.890	IP-31-0061	AYA150M11.890	13,14,15,16
Y205	11.940	IP-31-0062	AYA150M11.940	17,18,19,20
Y206	11.990	IP-31-0063	AYA150M11.990	21,22,23

ITEM No.	CRYSTAL FREQUENCY IN MHz	MFGR. PART No.	CTS KNIGHTS PART No.	CHANNEL
Y207	7.4225	IP-31-0064	AYB130M7.4225	1,5,9,13,17,21
Y208	7.4325	IP-31-0065	AYB130M7.4325	2,6,10,14,18,22
Y209	7.4425	IP-31-0066	AYB130M7.4425	3,7,11,15,19
Y210	7.4625	IP-31-0067	AYB130M7.4625	4,8,12,16,20,23
Y401	7.8025	IP-31-0068	AYC32M7.8025	CARRIER OSC.

PARTS LIST AND DESCRIPTION (CONTINUED)

(When ordering parts, state Model, Part Number, and Description.)

MISCELLANEOUS

ITEM No.	PART NAME	PART No.	NOTES
FL301	Filter	IP31-0047	(7.8MHz)
K1	Relay	IP32-0005	Xmit-Rec (12V DC)
M1	Meter	IP27-0009	S-RF-SWR
M2	Clock	IP30-0134	
S1	Switch	IP25-0037	Channel Selector
S2	Switch	IP25-0038	Mode
S3	Switch	IP25-0034	PA-CB
S4	Switch	IP25-0036	NB (On-Off)
S5	Switch	IP25-0039	Meter
S701	Switch		Power On-Off

CABINETS & CABINET PARTS (When ordering specify model, chassis & color)

ITEM	PART No.
Case	IP30-0139
Bezel	IP30-0139
Mobile Mounting Bracket	IP30-0138

ITEM	PART No.
Channel Dial Knob (7 used)	IP30-0136

ACCESSORIES

ITEM	MFGR. PART No.	REMARKS
Microphone w/Cord & Plug	IP29-0016	

WIRING DATA

General-use Hook-up Wire	Use BELDEN No.	8530 (Solid) Available in 12 Colors 8524 (Stranded) Available in 12 Colors
Power Cord, 2-Wire	Use BELDEN No.	17106 (Plastic) or 17126 (Rubber) -6 feet 17109 (Plastic) or 17129 (Rubber) -9 feet
Shielded Antenna Lead	Use BELDEN No.	8214 Lowest-loss (RG-8/U Type) 8237 Low-loss (RG-8/U) 8240 (Solid) Miniature (RG-58/U) 8259 (Stranded) Miniature (RG-58A/U)
Coiled Microphone Cable	Use BELDEN No.	8497 3-Conductor (1 shielded for Press-to-Talk) Neoprene 8491 4-Conductor (2 shielded, 2 unshielded) Neoprene