ALL MODE MULTI-BAND TRANSCEIVER

TS-2000/X

SERVICE MANUAL

downloaded by
www.radioamatore.info

KENWOOD

© 2000-12 PRINTED IN JAPAN
B51-8558-00 (N) 889

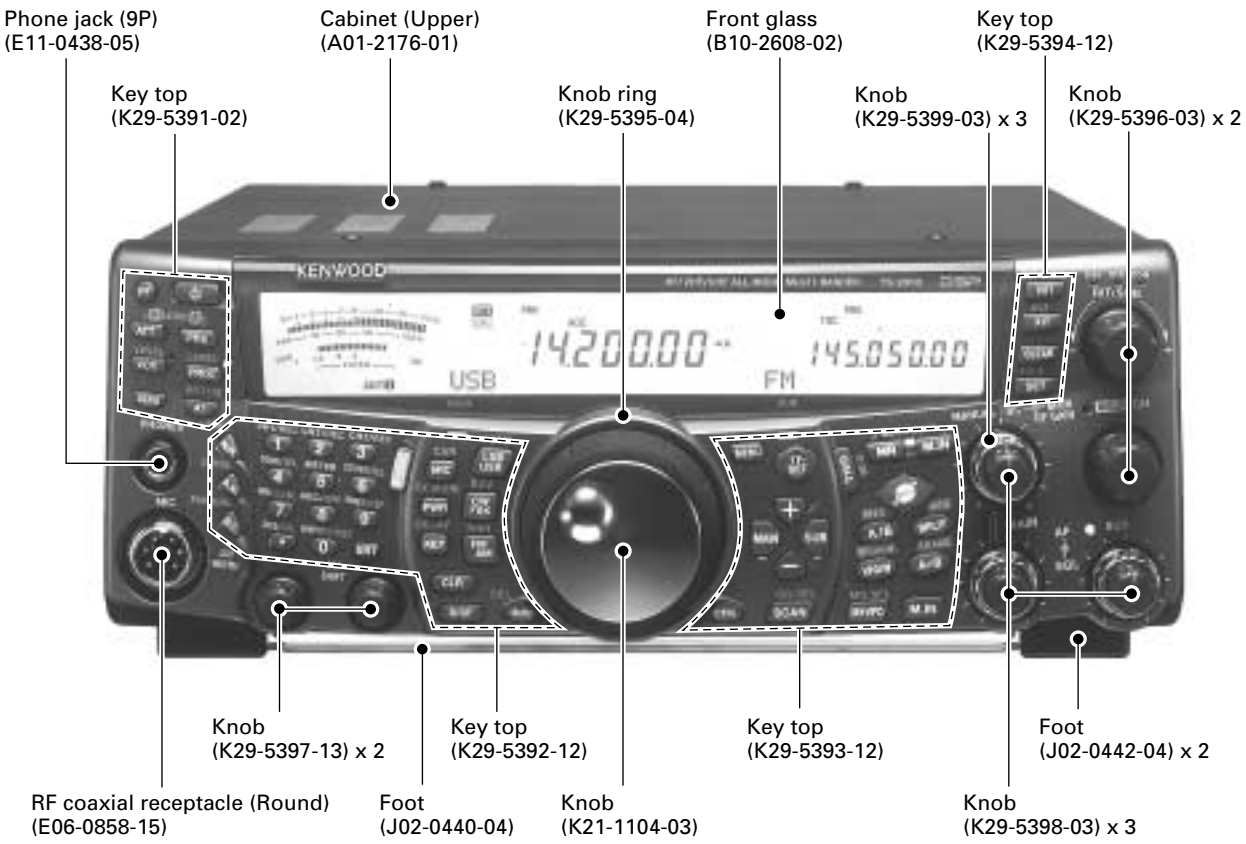

CONTENTS

CIRCUIT DESCRIPTION 2
DESCRIPTION OF COMPONENTS 24
SEMICONDUCTOR DATA 34
PARTS LIST 51
EXPLODED VIEW 93
PACKING 97
ADJUSTMENT 98
TERMINAL FUNCTION 124
WIRING 133
PC BOARD VIEWS / CIRCUIT DIAGRAMS
FILTER UNIT (X51-315X-XX) 135
FINAL UNIT (X45-360X-XX) 137
DISPLAY UNIT (X54-3320-00) 151
CONTROL UNIT (X53-391X-XX) 155
TX-RX 1 UNIT (X57-605X-XX) 169
TX-RX 2 UNIT (X57-606X-XX) 186
TX-RX 3 UNIT (X57-6070-00) 209
BLOCK DIAGRAM 223
LEVEL DIAGRAM 229
MC-52DM 233
UT-20 235
RC-2000 235
ARCP-2000 235
SPECIFICATIONS 236

CIRCUIT DESCRIPTION

Overview of the Operation

The TS-2000/X basically consists of an all-mode-receiver incorporating an IF/AF DSP for satellite communication with an independent FM/AM sub-receiver for the VHF and UHF bands.

■ Overview of the operation of the all-mode transceiver unit (main band side) with an IF/AF DSP for satellite communication

The receiver unit has an independent front end for each of the HF, 50MHz, 144MHz, 430MHz and 1.2GHz bands (some products do not support the 1.2GHz band). The circuits following the 10.695MHz IF stage are common to all the bands. (Thus, it cannot receive two SSB signals at the same time.)

The IF frequency of the transmitter unit is shifted from the IF frequency of the receiver unit by 100kHz to enable satellite operation (full duplex operation). The final section is independent of the HF, 50MHz, 144MHz, 430MHz and 1.2GHz bands. Consequently, you can select a combination of bands permitting satellite communication from the HF, 50MHz, 144MHz, 430MHz and 1.2GHz bands.

The transmitter unit and receiver unit on the main band side operate simultaneously during satellite transmission. The receiver unit on the sub-band side does not work. (The sub-band receiver is not used during satellite operation.)

Two 16-bit DSP ICs are used; one performs IF processing (main band side) and the other carries out AF processing (main and sub bands). Although the DSP IC is a 16-bit unit, it carries out "double-precision operations" for critical parts of IF processing to perform 32-bit equivalent processing. In addition, the DSP IC uses a 100-MHz high-speed internal clock. The conversion from an analog signal to a digital signal (A/D conversion) is performed with 24 bits at high precision.

The DSP circuit for IF operates in any mode other than FM mode for both transmission and reception. FM modulation, detection and squelch processing are conventional analog processes. (The processing prior to modulation and after demodulation in FM is performed by the DSP.)

In the mode in which the IF DSP circuit operates, it carries out modulation and demodulation, digital IF filtering, digital AGC, and CW waveform processing during transmission, as in the TS-870. All these functions are operated in all the bands on the main band side, including satellite operation.

The AF unit is processed by the DSP in all modes. The operating range of the DSP circuit depends on the mode, but it performs beat cancellation, noise reduction, AF DSP filtering, etc.

■ Overview of the operation of the independent FM/AM sub-receiver unit (sub-band side) for the VHF and UHF bands

The local oscillator system and IF/AF signal system of the sub-receiver unit are independent of the main band side. Therefore, the sub-band receiver can receive signals while the main band receiver is sending a signal. (Except when reception is impossible due to harmonics of the transmit frequency and when the main band and sub-band are on the same frequency band.)

The sub-band receive signal is branched from the RF unit on the main band side. It is, therefore, not necessary to install a dedicated antenna for sub-band reception.

Transmission can be performed with the sub receive frequency by shifting the "PTT band" to the sub-band side. It is made possible by internally using the transmission function on the main band side.

AF processing is also carried out by the DSP on the sub-band side and the noise reduction function works.

The sub-band reception function, including display, can be turned off.

Frequency Configuration (Fig. 1)

This transceiver utilizes double conversion in FM mode and triple conversion in non-FM modes during transmission.

It utilizes triple conversion in FM mode and quadruple conversion in non-FM modes during reception. The fourth 12kHz IF signal is converted from analog to digital and connected to the DSP.

When the carrier point frequency of the signal input from the antenna is f_{IN}, the relationship between these signals when demodulating this signal is expressed by the following equations:

HF MAIN	$f_{IN} = f_{LO1} - f_{LO2} - f_{LO3} + f_{LO4} - 12kHz$
VHF MAIN	$f_{IN} = f_{LO1} - f_{LO2} - f_{LO3} + f_{LO4} - 12kHz$
UHF MAIN	$f_{IN} = f_{LO1} + f_{LO2} + f_{LO3} - f_{LO4} + 12kHz$
1.2G MAIN	$f_{IN} = f_{LO1} \times 2 + f_{LO2} + f_{LO3} - f_{LO4} + 12kHz$

Reference Signal Generation Circuit

The 15.6MHz reference frequency fstd for PLL frequency control is generated by the TCXO (X400). The signal passes through a buffer amplifier (Q420) and is used as the reference signal for the second local oscillator (HFLO2) for HF band reception and the first local oscillator (SLO1) subband reception.

The reference signal is doubled by Q412, and the resulting 31.2MHz signal is used as the reference signal for DDSs (IC406, IC407, IC408, IC601, IC602, IC603).

The 31.2MHz signal is supplied to the TX-RX2 unit (X57-606 A/11) as LO2 for VHF and UHF bands.

downloaded by
www.radioamatore.info

CIRCUIT DESCRIPTION

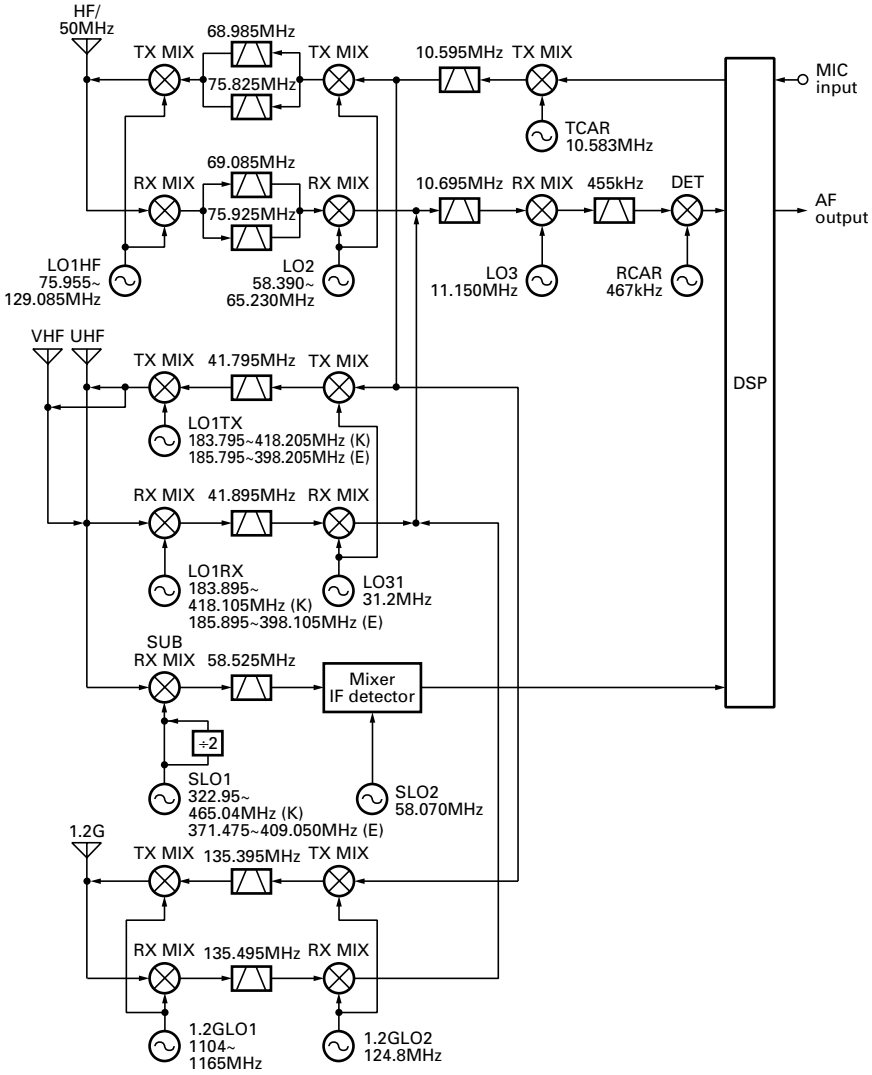

Fig. 1 Frequency configuration

HF/50MHz LO1

When the HF and or 50MHz band is operating in the main band, the HF REF VCO (Q427) generates 31.17 to 32.834 MHz. (See Table 1, frequency configuration.)

The output signal from the DDS (IC408) is input to pin 8 of the PLL IC (IC409) for HF REF, divided into 1/16 in IC409 to produce comparison frequency fø 2 of 487 to 513kHz.

The output signal from the VCO (Q427) goes to pin 6 of PLL IC (IC409), is divided into 1/64 in IC409, and compared with the signal with comparison frequency fø 2 by a phase comparator. The frequency is locked and the HF REF signal is output.

The output signal from the PLL IC (IC409) for HF REF is fed to pin 8 of the PLL IC (IC414) for HF LO1 as a reference frequency, and divided to produce comparison frequency fø 1 of 975 to 1358kHz.

The HF LO1 VCO (Q459, Q460, Q464) generates 75.955 to 129.185MHz. The output from this VCO goes to pin 6 of IC414, is divided into 1/N 1 in IC414, compared with the signal with comparison frequency fø 1 by a phase comparator. The frequency is locked and the HF LO1 output frequency is generated.

The DDS (IC408) sweeps output frequency (7.792 to 8.209MHz) in 10Hz steps by equation $f_{DDS\ STEP}$ (Hz) = (10*R 1)/(N 1*4) and in 1Hz steps by equation $f_{DDS\ STEP}$ (Hz) = (1*R 1)/(N 1*4), the HF LO1 covers the frequencies of 75.955 to 129.085MHz in 10Hz or 1Hz steps.

One of three VCOs (Q459, Q460, Q464) is selected by the signal (HF VCO1,HF VCO2,HF VCO3) from the serial-parallel IC (IC404).

The output from the VCOs (Q459, Q460, Q464) passes through a buffer amplifier (Q462), is amplified by Q476, and passes through a low-pass filter. The impedance is converted by an attenuator and the signal is output as HFLO1.

The cut-off frequency of the low-pass filter in the output section is changed by turning Q474 ON/OFF with a VCO select signal (HF VCO1).

CIRCUIT DESCRIPTION

HF LO2

When the HF and or 50MHz band is operating, the HF LO2 VCO (Q409) generates 65.230 to 58.390MHz. (See Table 1, frequency configuration.)

The 15.6MHz reference signal fstd is input to pin 8 of the PLL IC (IC401) for HF LO2, divided into 1/226 and 1/319 in IC401 to produce comparison frequency fø of 69.027 to 48.903kHz.

The output signal from the VCO (Q409) goes to pin 6 of IC401, its frequency is divided into 1/945 and 1/1194 in IC401, compared with comparison frequency fø by a phase comparator, and locked. The division ratio data comes from the control unit.

The output signal from the VCO (Q409) passes through a buffer amplifier (Q415), is amplified by Q421, and passes through a low-pass filter. The impedance is converted by an attenuator and the signal is output as HF LO2.

When the HF and or 50MHz band is not operating, Q403 is turned OFF with the LO2SEL signal and HF LO2 VCO (Q409) stops operation.

Display frequency f_{RX} (MHz)		LO1 OUT (MHz)	IC414 : LMX2306TMX		HF REF (MHz)	IC409 : LMX2306TMX		DDS output (MHz) IC408 : AD9835BRU
Start	Stop		R1	N1		N2	R2	
0.030000	1.999999	LO1	32	76	HF REF	64	16	f_{DDS}
2.000000	5.999999	$= f_{RX} + IF$	30	75	$= \frac{(f_{RX} + IF)}{N1} * R1$			$= \frac{HF\ REF}{N2} * R2$
6.000000	8.999999		32	84				
9.000000	12.999999		30	75				
13.000000	16.999999		32	84				
17.000000	17.999999		32	92				
18.000000	21.999999		30	90				
22.000000	23.999999		32	100				
24.000000	24.999999		32	92				
25.000000	25.999999		30	90				
26.000000	29.999999		24	78				
30.000000	32.999999		32	100				
33.000000	36.999999		30	97				
37.000000	40.999999		32	115				
41.000000	44.999999		32	119				
45.000000	48.999999		30	115				
49.000000	51.999999		30	113				
52.000000	55.999999		30	115				
56.000000	60.000000		32	127				

LO2 OUT (MHz)	IC401 : LMX2306TMX		IF	
	N3	R3	RX	TX
65.230088	945	226	75.925088	75.825088
58.389969	1194	319	69.084968	68.984968
65.230088	945	226	75.925088	75.825088
58.389969	1194	319	69.084968	68.984968
65.230088	945	226	75.925088	75.825088
58.389969	1194	319	69.084968	68.984968
65.230088	945	226	75.925088	75.825088
58.389969	1194	319	69.084968	68.984968

Table 1 Main HF and 50MHz band frequency configuration

downloaded by
www.radioamatore.info

CIRCUIT DESCRIPTION

144MHz LO1

When the VHF band is operating in the main band, the VHF REF VCO (Q441) generates 36.057 to 37.288MHz (K), 36.450 to 36.842MHz (E). (See Table 2, Frequency Configuration.)

The output signal from the DDS (IC406) is input to pin 8 of the PLL IC (IC411) for VHF REF and divided into 1/16 in IC411 to produce comparison frequency fø 2 of 563 to 583kHz (K), 569 to 576kHz (E).

The output signal from the VCO (Q441) goes to pin 6 of IC411 and its frequency is divided into 1/64 in IC411, compared with the signal with comparison frequency fø 2 by a phase comparator, and is locked.

The VHF REF PLL output signal is fed to pin 8 of IC410 as a reference frequency, and divided into 1/30 in IC410 to produce comparison frequency fø 1 of 1202 to 1243kHz (K), 1215 to 1228kHz (E).

The VHF LO1 VCO (Q433) generates 183.895 to 193.895 MHz (K), 185.795 to 187.895MHz (E) in receive mode and 183.795 to 193.795MHz (K), 185.795 to 187.795MHz (E).

The VCO (Q433) output signal goes to pin 6 of IC410, and its frequency is divided into 1/N1 in IC410 and compared with comparison frequency fø 1 by a phase comparator. The frequency is locked and LO1 is generated.

The DDS (IC406) sweeps output frequency (9.014 to 9.321MHz (K), 9.112 to 9.210MHz (E)) in 10Hz steps by equation $f_{DDS\ STEP}$ (Hz) = (10*R1)/(N1*4) and in 1Hz steps by equation $f_{DDS\ STEP}$ (Hz) =(1*R1)/(N1*4), the LO1 covers the frequencies of 183.895 to 193.895 MHz (K), 185.895 to 187.895MHz (E) in receive mode and 183.795 to 193.795MHz (K), 185.795 to 187.795MHz (E) in transmit mode in 10Hz or 1Hz steps.

The PLL output signal is changed by the switching circuit of Q469 (receive) and Q470 (transmit) so that the output amplifier and low-pass filter correspond to VHF band transmission and reception.

In receive mode, the signal is amplified by the broadband amplifier (IC415), and passes through a low-pass filter. The impedance is converted by an attenuator and the signal is output to the RF unit (X57-606) as the first local oscillator RXLO1.

In transmit mode, the signal is amplified by the broadband amplifier (IC416), and passes through a low-pass filter. The impedance is converted by an attenuator and the signal is output to the RF unit (X57-606) as the first local oscillator TXLO1.

When the VHF is not operating, Q436 is turned OFF with a signal from the serial-parallel IC (IC404) and VHF LO1 VCO (Q433) stops operation.

Display frequency f_{RX} (MHz)		LO1 OUT (MHz)	IC410 : LMX2306TMX		VHF REF (MHz)	IC411 : LMX2306TMX		DDS output (MHz) IC406 : AD9835BRU
Start	Stop		R1	N1		N2	R2	
142.000000 (K)	146.999999 (K)	LO1	30	153	VHF REF	64	16	f_{DDS}
144.000000 (E)	146.000000 (E)	$= f_{RX} + IF$			$= \frac{(f_{RX} + IF)}{N1} * R1$			$= \frac{VHF\ REF}{N2} * R2$
147.000000 (K)	151.999999 (K)			156				

IF = RX : 41.895
TX : 41.795

Table 2 Main VHF band frequency configuration

430MHz LO1

When the UHF band is operating in the main band, the UHF REF VCO (Q431) generates 378.105 to 418.105MHz (K), 388.105 to 398.105MHz (E) in receive mode and 378.205 and 418.205MHz (K), 388.205 to 398.205MHz (E). (See Table 3, Frequency Configuration.)

The output signal (8.328 to 8.475MHz (K), 8.344 to 8.469MHz (E)) from the DDS (IC407) passes through a ceramic filter (CF400), is input to pin 8 of the PLL IC (IC412) for UHF and divided into 1/16 in IC412 to produce comparison frequency fø of 520 to 530 kHz.

The output signal from the VCO (Q431) goes to pin 6 of IC412 and its frequency is divided into 1/N in IC412, compared with comparison frequency fø by a phase comparator, and is locked.

The DDS (IC407) sweeps output frequency (8.328 to 8.475MHz (K), 8.344 to 8.469MHz (E)) in 10Hz steps by equation $f_{DDS\ STEP}$ (Hz) = 10*R/N and in 1Hz steps by equation $f_{DDS\ STEP}$ (Hz) = 1*R/N, the LO1 covers the frequencies of 378.105 to 418.105MHz (K), 388.105 to 398.105MHz (E) in receive mode and 378.205 to 418.205MHz (K), 388.205 to 398.205MHz (E) in transmit mode in 10Hz or 1Hz steps.

The PLL output signal is changed by the switching circuit of Q471 (receive) and Q472 (transmit) so that the output amplifier and low-pass filter correspond to UHF band transmission and reception.

In receive mode, the signal is amplified by the broadband amplifier (IC415), and passes through a low-pass filter. The impedance is converted by an attenuator and the signal is output to the RF unit (X57-606) as the local oscillator signal RXLO1.

In transmit mode, the signal is amplified by the broadband amplifier (IC416), and passes through a low-pass filter. The impedance is converted by an attenuator and the signal is output to the RF unit (X57-606) as the local oscillator signal TXLO1.

When the UHF is not operating, Q434 is turned OFF with a signal from the serial-parallel IC (IC404) and UHF VCO (Q431) stops operation.

CIRCUIT DESCRIPTION

Display frequency f_{RX} (MHz)		LO1 OUT (MHz)	IC412ÅF LMX2306TMX		DDS output (MHz) IC407 : AD9835BRU
Start	Stop		R	N	
420.000000 (K)	425.999999 (K)	LO1	16	726	f_{DDS}
425.000000 (K) 430.000000 (E)	431.499999 (K)	$= f_{RX} - IF$		736	$= \frac{f_{RX} - IF}{N} * R$
431.500000 (K,E)	435.499999 (K,E)			747	
435.500000 (K,E)	439.499999 (K,E)			754	
439.500000 (K,E)	443.499999 (K) 440.000000 (E)			762	
443.500000 (K)	447.999999 (K)			770	
448.000000 (K)	449.999999 (K)			778	

IF = RX : 41.895
TX : 41.795

Table 3 Main UHF band frequency configuration

SUB LO1

When the sub band receiver is operating, the sub VCO (Q406, Q407) generates 322.95 to 465.040MHz. (See Table 4, frequency configuration.)

The 15.6MHz reference signal fstd is input to pin 8 of the PLL IC (IC402) for the sub VCO, divided into 1/R in IC402 to produce comparison frequency fø of 5 and 6.25kHz. The division ratio data comes from the control unit.

The output signal from the VCO (Q406, Q407) goes to pin 6 of IC402, its frequency is divided into 1/N in IC402, compared with comparison frequency fø by a phase comparator, and locked.

The output signal from the VCO (Q406, Q407) passes through a buffer amplifier (Q413, Q414), is amplified by the broad-band amplifier (IC405), and passes through a low-pass filter. The impedance is converted by an attenuator and the signal is output as SLO1.

When the sub band receiver is not operating, Q411 and Q411 are turned OFF with the BSW1 and BSW2 signals and sub VCO (Q406, Q407) stops operation.

Display frequency f_{RX} (MHz)		SLO1 OUT (MHz)	IC404 : BU4094BCFV			IC402 : LMX2316TMX			
						Step : 5,10,15,20,30 (kHz)		Step : 6.25,12.5,25,50,100 (kHz)	
			13pin : Q6	12pin : Q7	11pin : Q8	R	N	R	N
Start	Stop		(BSW2)	(BSW1)	(B LU SW)		Formula		Formula
118.00000 (K)	118.94500 (K)	SLO1	L	H	L	3120	$N = \frac{2 \times (f_{RX} + 58.525)}{0.005}$	2496	$N = \frac{2 \times (f_{RX} + 58.525)}{0.00625}$
118.95000 (K)	134.99500 (K)	$= (f_{RX} + 58.525) * 2$	H	L					
135.00000 (K) 144.00000 (E)	154.49500 (K) 146.00000 (E)		L	H	H				
154.50000 (K)	173.99500 (K)		H	L					
220.00000 (K)	235.99500 (K)	SLO1	L	H	L		$N = \frac{2 \times (f_{RX} - 58.525)}{0.005}$		$N = \frac{2 \times (f_{RX} - 58.525)}{0.00625}$
236.00000 (K)	252.49500 (K)	$= (f_{RX} - 58.525) * 2$	H	L					
252.50000 (K)	271.54500 (K)		L	H	H				
271.55000 (K)	289.99375 (K)		H	L					
290.00000 (K)	296.42000 (K)	SLO1	L	H	L		$N = \frac{f_{RX} + 58.525}{0.005}$		$N = \frac{f_{RX} + 58.525}{0.00625}$
296.42500 (K)	328.99500 (K)	$= f_{RX} + 58.525$	H	L					
329.00000 (K)	367.52000 (K)		L	H	H				
367.52500 (K)	399.99500 (K)		H	L					
400.00000 (K)	413.47000 (K)	SLO1	L	H	L		$N = \frac{f_{RX} - 58.525}{0.005}$		$N = \frac{f_{RX} - 58.525}{0.00625}$
413.47500 (K) 430.00000 (E)	445.99500 (K) 440.00000 (E)	$= f_{RX} - 58.525$	H	L					
446.00000 (K)	484.57000 (K)		L	H	H				
484.57500 (K)	511.99500 (K)		H	L					

Table 4 Sub band frequency configuration

CIRCUIT DESCRIPTION

1.2GHz Unit Local Oscillator

The 12LO31 signal (31.2MHz) is quadrupled to 124.8MHz in Q14 and 15. This signal is sent to the mixers of the transmitter section (Q1 and Q2) and the mixers of the receiver section (Q7 and Q8)

In the DDS (C4) , 8.323~8.488MHz are output using 12LO31 as the reference signal. This signal passes through a filter (CF1 and CF2) and is input to the mixers for reference PLL signals (Q313 and 314).

In Q313 and Q314, the DDS output is mixed with 12LO31 (31.2MHz) and an approximately 39.6MHz signal is obtained. This signal passes through a filter and an amplifier (Q312) and becomes the reference signal of the PLL IC (IC5).

The VCO (Q301) oscillates at 552.253~582.303MHz. This signal is amplified in Q302 and goes to the PLL IC (IC5) and Q19.

The PLL IC (IC5) divides the reference signal (approximately 39.6MHz) to 1/72. The signal from Q302 is divided to 1/N (N=1006~1058).

The two signals are compared in the phase comparator within the IC and the VCO (Q301) oscillation frequency is locked.

The signal input into Q19 is doubled. This signal passes through a filter and an amplifier (Q20) and goes to the sending mixer (D1) and the receiving mixer (Q10).

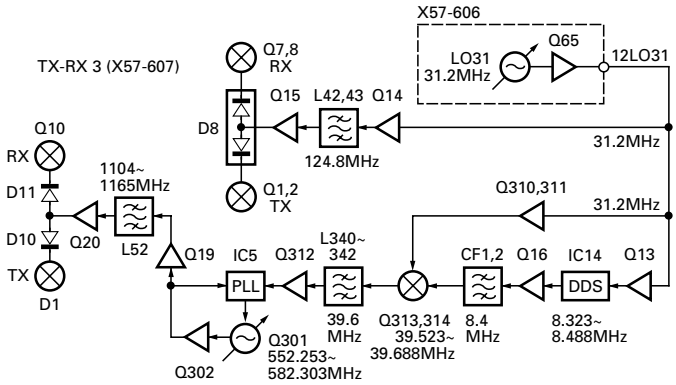

Fig. 2 1.2GHz unit local oscillator

Display frequency f_{RF} (MHz)		Q301 oscillation frequency f_{VCO} (MHz)	C5 : LMX2316TMX		DDS output (MHz) IC4 : AD9851BRS
Start	Stop		R	N	
1240.000000 (K)	1243.999999 (K)	f_{VCO} = (f_{RF} – IF)/2	72	1006	$f_{DDS} = \frac{(f_{RF} - IF)*R}{2*N} - 31.2$
1244.000000 (K)	1245.999999 (K)			1008	
1246.000000 (K)	1249.999999 (K)			1011	
1250.000000 (K)	1253.999999 (K)			1015	
1254.000000 (K)	1255.999999 (K)			1017	
1256.000000 (K)	1258.999999 (K)			1020	
1259.000000 (K) 1260.000000 (E)	1262.999999			1023	
1263.000000	1266.999999			1027	
1267.000000	1270.999999			1030	
1271.000000	1274.999999			1034	
1275.000000	1277.999999			1037	
1278.000000	1280.999999			1040	
1281.000000	1284.999999			1043	
1285.000000	1288.999999			1047	
1289.000000	1292.499999			1050	
1292.500000	1294.999999			1053	
1295.000000	1297.999999			1056	
1298.000000	1299.999999			1058	

IF=RX : 135.495
TX : 135.395

Table 5 1.2GHz band frequency configuration

Local Signals

The RXLO3 (11.15MHz) and RCAR (467kHz) for reception and TCAR (10.583MHz) for transmission are output from DDSs (RXL03 : IC603, RCAR : IC601, TCAR : IC602).

The frequencies of local oscillator output signals (LO1, LO2, RCAR, TCAR) for each band are shifted by offset (IF filter setting), RIT, XIT, IF SHIFT as listed in Tables 5 to 11.

downloaded by
www.radioamatore.info

CIRCUIT DESCRIPTION

HF TX/RX LO1	DDS IC408 : AD9835BRU							
	LSB		USB		CW		CW-R	
	RX	TX	RX	TX	RX	TX	RX	TX
Filter offset	–1.5k	–1.5k	+1.5k	+1.5k	+0.7k	+0.7k	–0.7k	–0.7k
RIT	+(D RIT)	–	+(D RIT)	–	+(D RIT)	–	+(D RIT)	–
XIT	–	+(D XIT)	–	+(D XIT)	–	+(D XIT)	–	+(D XIT)
SLOPE H	+(SSB H)	–	–(SSB H)	–	–(CW H)	–	+(CW H)	–
10.695MHz Filter Adj.	+(D 10.695)	–	–(D 10.695)	–	–	–	–	–
HF TX/RX LO1	FSK		FSK-R		AM		FM	
	RX	TX	RX	TX	RX	TX	RX	TX
Filter offset	–(1.5k–Fcenter)	0	+(1.5k–Fcenter)	0	0	0	0	0
RIT	+(D XIT)	–	+(D RIT)	–	+(D RIT)	–	+(D RIT)	–
XIT	–	+(D XIT)	–	+(D XIT)	–	+(D XIT)	–	+(D XIT)
SLOPE H	+(FSK H)	–	–(FSK H)	–	–	–	–	–
10.695MHz Filter Adj.	–	–	–	–	–	–	–	–

Table 6 HF band LO1 frequency shift data

144MHz TX/RX LO1	DDS IC406 : AD9835BRU							
	LSB		USB		CW		CW-R	
	RX	TX	RX	TX	RX	TX	RX	TX
Filter offset	–1.5k	–1.5k	+1.5k	+1.5k	+0.7k	+0.7k	–0.7k	–0.7k
RIT	+(D RIT)	–	+(D RIT)	–	+(D RIT)	–	+(D RIT)	–
XIT	–	+(D XIT)	–	+(D XIT)	–	+(D XIT)	–	+(D XIT)
SLOPE H	+(SSB H)	–	–(SSB H)	–	–(CW H)	–	+(CW H)	–
10.695MHz Filter Adj.	+(D 10.695)	–	–(D 10.695)	–	–	–	–	–
144MHz TX/RX LO1	FSK		FSK-R		AM		FM	
	RX	TX	RX	TX	RX	TX	RX	TX
Filter offset	–(1.5k–Fcenter)	0	+(1.5k–Fcenter)	0	0	0	0	0
RIT	+(D XIT)	–	+(D RIT)	–	+(D RIT)	–	+(D RIT)	–
XIT	–	+(D XIT)	–	+(D XIT)	–	+(D XIT)	–	+(D XIT)
SLOPE H	+(FSK H)	–	–(FSK H)	–	–	–	–	–
10.695MHz Filter Adj.	–	–	–	–	–	–	–	–

Table 7 144MHz band LO1 frequency shift data

430MHz TX/RX LO1	DDS IC407 : AD9835BRU							
	LSB		USB		CW		CW-R	
	RX	TX	RX	TX	RX	TX	RX	TX
Filter offset	–1.5k	–1.5k	+1.5k	+1.5k	+0.7k	+0.7k	–0.7k	–0.7k
RIT	+(D RIT)	–	+(D RIT)	–	+(D RIT)	–	+(D RIT)	–
XIT	–	+(D XIT)	–	+(D XIT)	–	+(D XIT)	–	+(D XIT)
SLOPE H	+(SSB H)	–	–(SSB H)	–	–(CW H)	–	+(CW H)	–
10.695MHz Filter Adj.	+(D 10.695)	–	–(D 10.695)	–	–	–	–	–
430MHz TX/RX LO1	FSK		FSK-R		AM		FM	
	RX	TX	RX	TX	RX	TX	RX	TX
Filter offset	–(1.5k–Fcenter)	0	+(1.5k–Fcenter)	0	0	0	0	0
RIT	+(D XIT)	–	+(D RIT)	–	+(D RIT)	–	+(D RIT)	–
XIT	–	+(D XIT)	–	+(D XIT)	–	+(D XIT)	–	+(D XIT)
SLOPE H	+(FSK H)	–	–(FSK H)	–	–	–	–	–
10.695MHz Filter Adj.	–	–	–	–	–	–	–	–

Table 8 430MHz band LO1 frequency shift data

CIRCUIT DESCRIPTION

1.2GHz TX/RX LO1	DDS IC4 : AD9851BRS							
	LSB		USB		CW		CW-R	
	RX	TX	RX	TX	RX	TX	RX	TX
Filter offset	–1.5k	–1.5k	+1.5k	+1.5k	+0.7k	+0.7k	–0.7k	–0.7k
RIT	+(D RIT)	–	+(D RIT)	–	+(D RIT)	–	+(D RIT)	–
XIT	–	+(D XIT)	–	+(D XIT)	–	+(D XIT)	–	+(D XIT)
SLOPE H	+(SSB H)	–	–(SSB H)	–	–(CW H)	–	+(CW H)	–
10.695MHz Filter Adj.	+(D 10.695)	–	–(D 10.695)	–	–	–	–	–
1.2GHz TX/RX LO1	FSK		FSK-R		AM		FM	
	RX	TX	RX	TX	RX	TX	RX	TX
Filter offset	–(1.5k–Fcenter)	0	+(1.5k–Fcenter)	0	0	0	0	0
RIT	+(D XIT)	–	+(D RIT)	–	+(D RIT)	–	+(D RIT)	–
XIT	–	+(D XIT)	–	+(D XIT)	–	+(D XIT)	–	+(D XIT)
SLOPE H	+(FSK H)	–	–(FSK H)	–	–	–	–	–
10.695MHz Filter Adj.	–	–	–	–	–	–	–	–

Table 9 1.2GHz band LO1 frequency shift data

RX LO3		DDS IC603 : AD9835BRU							
		LSB	USB	CW	CW-R	FSK	FSK-R	AM	FM
BASE		11.150 (MHz)							
HF	SLOPE H	+(SSB H)	–(SSB H)	–(CW H)	+(CW H)	+(FSK H)	–(FSK H)	–	–
	SLOPE L	+(SSB L)	–(SSB L)	–(CW L)	+(CW L)	+(FSK L)	–(FSK L)	–	–
	10.695MHz Filter Adj.	+(D 10.695)	–(D 10.695)	–	–	–	–	–	–
	455kHz Filter Adj.	+(D 455)	–(D 455)	–	–	–	–	–	–
144 MHz	SLOPE H	+(SSB H)	–(SSB H)	–(CW H)	+(CW H)	+(FSK H)	–(FSK H)	–	–
	SLOPE L	+(SSB L)	–(SSB L)	–(CW L)	+(CW L)	+(FSK L)	–(FSK L)	–	–
	10.695MHz Filter Adj.	+(D 10.695)	–(D 10.695)	–	–	–	–	–	–
	455kHz Filter Adj.	+(D 455)	–(D 455)	–	–	–	–	–	–
430 MHz	SLOPE H	–(SSB H)	+(SSB H)	+(CW H)	–(CW H)	–(FSK H)	+(FSK H)	–	–
	SLOPE L	–(SSB L)	+(SSB L)	+(CW L)	–(CW L)	–(FSK L)	+(FSK L)	–	–
	10.695MHz Filter Adj.	–(D 10.695)	+(D 10.695)	–	–	–	–	–	–
	455kHz Filter Adj.	–(D 455)	+(D 455)	–	–	–	–	–	–
1.2 GHz	SLOPE H	–(SSB H)	+(SSB H)	+(CW H)	–(CW H)	–(FSK H)	+(FSK H)	–	–
	SLOPE L	–(SSB L)	+(SSB L)	+(CW L)	–(CW L)	–(FSK L)	+(FSK L)	–	–
	10.695MHz Filter Adj.	–(D 10.695)	+(D 10.695)	–	–	–	–	–	–
	455kHz Filter Adj.	–(D 455)	+(D 455)	–	–	–	–	–	–

Table 10 RX LO3 frequency shift data

CIRCUIT DESCRIPTION

RCAR		DDS IC601 : AD9835BRU							
		LSB	USB	CW	CW-R	FSK	FSK-R	AM	FM
BASE		467 (kHz)							
HF	Filter offset	+1.5k	–1.5k	–0.7k	+0.7k	+(1.5k–Fcenter)	–(1.5k–Fcenter)	0	0
	CW pitch	–	–	–(PITCH)	+(PITCH)	–	–	–	–
	FSK tone H	–	–	–	–	+2.125k	–2.125k–FSK SHIFT	–	–
	FSK tone L	–	–	–	–	+1.275k	–1.275k–FSK SHIFT	–	–
	SLOPE L	+(SSB L)	–(SSB L)	–(CW L)	+(CW L)	+(FSK L)	–(FSK L)	–	–
	455kHz Filter Adj.	+(D 455)	–(D 455)	–	–	–	–	–	–
144	Filter offset	+1.5k	–1.5k	–0.7k	+0.7k	+(1.5k–Fcenter)	–(1.5k–Fcenter)	0	0
MHz	CW pitch	–	–	–(PITCH)	+(PITCH)	–	–	–	–
	FSK tone H	–	–	–	–	+2.125k	–2.125k–FSK SHIFT	–	–
	FSK tone L	–	–	–	–	+1.275k	–1.275k–FSK SHIFT	–	–
	SLOPE L	+(SSB L)	–(SSB L)	–(CW L)	+(CW L)	+(FSK L)	–(FSK L)	–	–
	455kHz Filter Adj.	+(D 455)	–(D 455)	–	–	–	–	–	–
430	Filter offset	–1.5k	+1.5k	+0.7k	–0.7k	–(1.5k–Fcenter)	+(1.5k–Fcenter)	0	0
MHz	CW pitch	–	–	+(PITCH)	–(PITCH)	–	–	–	–
	FSK tone H	–	–	–	–	–2.125k	+2.125k+FSK SHIFT	–	–
	FSK tone L	–	–	–	–	–1.275k	+1.275k+FSK SHIFT	–	–
	SLOPE L	–(SSB L)	+(SSB L)	+(CW L)	–(CW L)	–(FSK L)	+(FSK L)	–	–
	455kHz Filter Adj.	–(D 455)	+(D 455)	–	–	–	–	–	–
1.2	Filter offset	–1.5k	+1.5k	+0.7k	–0.7k	–(1.5k–Fcenter)	+(1.5k–Fcenter)	0	0
GHz	CW pitch	–	–	+(PITCH)	–(PITCH)	–	–	–	–
	FSK tone H	–	–	–	–	–2.125k	+2.125k+FSK SHIFT	–	–
	FSK tone L	–	–	–	–	–1.275k	+1.275k+FSK SHIFT	–	–
	SLOPE L	–(SSB L)	+(SSB L)	+(CW L)	–(CW L)	–(FSK L)	+(FSK L)	–	–
	455kHz Filter Adj.	–(D 455)	+(D 455)	–	–	–	–	–	–

Table 11 RCAR frequency shift data

TCAR		DDS IC602 : AD9835BRU							
		LSB	USB	CW	CW-R	FSK	FSK-R	AM	FM
BASE		10.583 (MHz)							
HF	Filter offset	–1.5k	+1.5k	+0.7k	–0.7k	0	0	0	0
144MHz	Filter offset	–1.5k	+1.5k	+0.7k	–0.7k	0	0	0	0
430MHz	Filter offset	+1.5k	–1.5k	–0.7k	+0.7k	0	0	0	0
1.2GHz	Filter offset	+1.5k	–1.5k	–0.7k	+0.7k	0	0	0	0

Table 12 TCAR frequency shift data

Description of variables in Tables 6 to 12

(D RIT)	RIT frequency variable amount (–9.99~+9.99kHz)
(D XIT)	XIT frequency variable amount (–9.99~+9.99kHz)
(SSB H)	SSB slope high cut frequency variable amount = 2.8k – Fhi
(SSB L)	SSB slope low cut frequency variable amount = Flow – 300
(CW H)	CW slope high cut frequency variable amount = 2.7k – (FSK SHIFT + Fwidth / 2)
(CW L)	CW slope low cut frequency variable amount = FSK SHIFT – Fwidth / 2 – 100
(FSK H)	FSK slope high cut frequency variable amount = 2.8k – (Fcenter + Fwidth / 2)
(FSK L)	FSK slope low cut frequency variable amount = Fcenter – Fwidth / 2
(D 10.695)	RX 10.695MHz filter adjustment frequency variable amount
(D 455)	RX 455kHz filter adjustment frequency variable amount
(PITCH)	CW pitch frequency (400~1000Hz, Initial value 800Hz)
(FSK SHIFT)	FSK shift width frequency (170Hz, 200Hz, 425Hz, 850Hz, Initial value 170Hz)
(Fcenter)	FSK RX center frequency = (2125Hz or 1275Hz) + (FSK SHIFT / 2)

CIRCUIT DESCRIPTION

HF Receiver System and Main IF System

Three antenna terminals used for the HF and 50MHz band reception are ANT1, ANT2 and HF RX ANT.

After the incoming signal from ANT1 and ANT2 passes through the transmission/reception changeover relay in the filter unit (X51-315), and is sent to the HFRX terminal of the TX-RX unit (X57-605). There is an HF RX ANT terminal there, and one of the antennas can be selected from the menu for reception .

The HF RX ANT terminal is used to connect a dedicated HF-band low-band receiving antenna, such as a Beverage antenna, and operates at frequencies up to 30MHz. (If an antenna, such as a solid wire antenna, is connected to this terminal, unwanted radio signals in the shack may be picked up. It is recommended that a 50 (coaxial cable be used for routing in the shack.)

The signal passes through an RF ATT, an image filter and a limiter for surge absorption and enters the RF BPF for both transmission and reception. The division of the RF BPF is in the range shown in the block diagram. For 6.9~7.5MHz, 13.9~14.5MHz and 49~54MHz, a dedicated BPF (adjustable type) is used and particularly effective for eliminating unwanted signals in the low band. Other BPFs (non-adjustable type) are designed as circuits with independent armature bands, except that the 24MHz and 28MHz bands are shared. Signals pass through these BPFs at the time of transmission, so they are useful for producing radio signals with little radiation.

Although the conventional RF ATT had an attenuation level of 20dB, the attenuation level of the current RF ATT is 12dB. It can, however, be changed to approximately 20dB by removing the jumper (CN2) near the ATT within the unit.

The pre-amplifier (Q12, Q705) have been changed to a power MOS FET from the combination of the conventional cascade amplifier and MOS FET amplifier. This element is a FET that is used in a younger stage for transmission and has excellent large input characteristics. The actual circuit contains two amplifiers using this FET. Large input characteristics with a low gain are given priority on the low band (Q12) with respect to 21.5MHz, and sensitivity is given priority on the high band (Q705). circuit on the low band side bordering 21.5 MHz favoring a gain with moderately large input characteristics and that on the hybrid side (Q705) favoring . When the pre-amplifier is off, the signal from the RF BPF enters the receiving first mixer (Q7~Q10) in the next stage as it is.

The receiving first mixer circuit uses a double balance type mixer with four joint type FETs. The signal is converted to the first IF frequency by the first local oscillator signal. The TS-2000S has adopted a method that changes the first IF frequency according to the receive frequency. For this reason, it has two sets of roofing filters (MCF) that determine the selectivity of the first IF. Table 1 shows the relationship between the receive frequency and the first IF frequency. The central frequencies for the reception and transmission of the first IF frequency are different from each other by 100kHz because the transmission and reception is performed simultaneously during satellite communication.

RX/TX frequency (MHz)	RX 1st IF (MHz)	TX 1st IF (MHz)
0.03~ 9.0	75.925	75.825
9.0 ~17.0	69.085	68.985
17.0 ~24.0	75.925	75.825
24.0 ~26.0	69.085	68.985
26.0 ~30.0	75.925	75.825
30.0 ~37.0	69.085	68.985
37.0 ~49.0	75.925	75.825
49.0 ~60.0	69.085	68.985

Table 13 RX frequency and 1st IF frequency

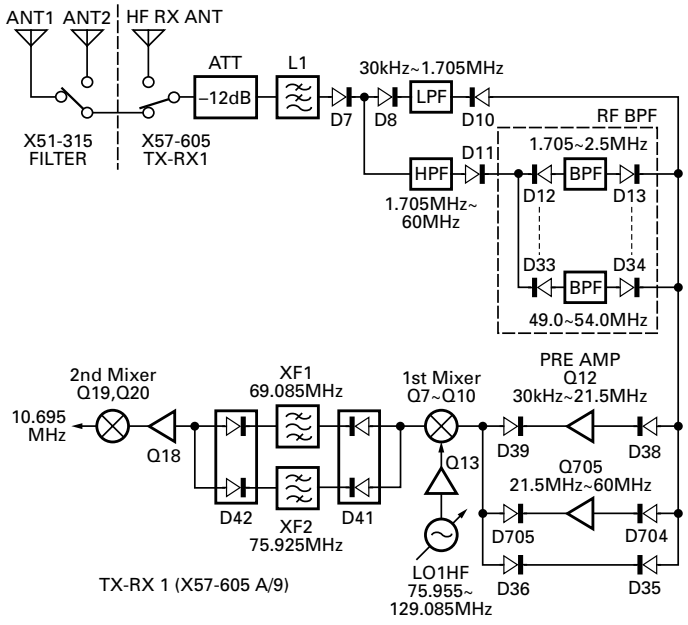

Fig. 3

CIRCUIT DESCRIPTION

The signal is then amplified by the first IF amplifier (Q18) and is converted to the second IF frequency of 10.695MHz in the second receive mixers (Q19, 20). The tuning frequency of each stage, the second local oscillator frequency and others are changed according to the receive frequency to respond to the changeover of the previously stated first IF frequency.

A circuit for changing over the IF signal from the units of the VHF, UHF and 1.2GHz bands and IF signal from the HF band is provided on the output side of the second receive mixer. That is, the circuits following this stage are commonly used circuits, regardless of the receive frequency on the main side.

In addition, there is a semi-fixed volume (VR4) on the output side of the first receive mixer. The volume is used to eliminate the gain differential generated due to the changeover of the first IF frequency.

The signal for the noise blanker is extracted from this point by passing through Q22. The noise blanker circuit is based on the same principle of operation as the conventional one, but can change the threshold level by changing the emitter potential of the noise detection stage (Q29).

The 10.695MHz signal is amplified by Q26 which also serves as a noise blanker gate circuit and passes through a 10.695MHz IF filter. It has three bandwidths, 2.7kHz, 6kHz and through, and when it is combined with the 455kHz filter group, the same continuous band change function (analog IF throughput: operation in modes other than FM) as in conventional analog devices is implemented. The band in this analog stage does not affect the operation of the digital IF filter in the IF DSP and is automatically set to the optimum band for removing unwanted signals outside the band.

Then, the signal is converted to the third IF frequency of 455kHz in the third receive mixer (Q700, 701). The 455kHz filter has three bandwidths: 2.7kHz, 9kHz and 15kHz. In FM mode (main band side) the 15kHz filter is selected for WIDE and the 9kHz filter is selected for NARROW, and signals passing through the filter are sent to the FM IC (ICI), amplified and detected. IC1 processes squelch, S meter, etc.

As a characteristic operation in this stage, a tuning error detection voltage for the ALT function operating in the 1.2GHz band FM mode is generated. It utilizes the DC voltage that is overlapped with the ICI detection output.

In a mode other than FM, the receive signal is amplified by the next third IF amplifier (Q38) and operational amplifier (IC18) and converted to the final 12kHz IF frequency by the fourth receive mixer (IC3). The converted IF signal in FM (audio signal) and non-FM mode (IF signal) is selected by the multiplexer (IC7) and the signal is sent to the DSP of the control unit for processing. The signals processed in the control unit become audio signals in all modes and return to the TX-RX1 unit (X57-605). These audio signals are power amplified to the level that drives the speaker with the AM amplifier (IC9).

A speaker separation function is available as an accessory circuit. The bands can be changed as shown in Table 14.

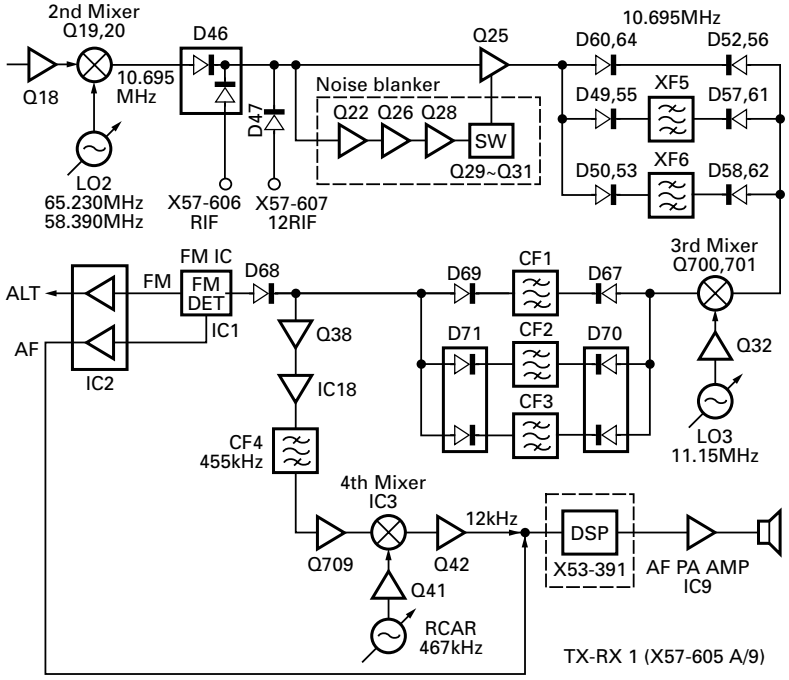

Fig. 4

downloaded by
www.radioamatore.info

CIRCUIT DESCRIPTION

■ Speaker output changeover

When external speakers 1 and 2 and headphones are connected, you can change over the sub/main band outputs.

The headphone connection is preferred over the all the speaker output and you can select from three patterns for headphone left-right changeover.

When SP1 only has been connected, the built-in speaker will change over to SP1.

When SP1 and SP2 are connected, you can select the SP1 and SP2 output method from three patterns, the same as for the headphones.

Connection Conditions (● : connected)				Output condition by connection of left table			
Headphone	SP1	SP2		Headphone	Built-in speaker	SP1	SP2
●	X	X	→	Pattern 0~2	Stop	X	X
●	●	X	→	Pattern 0~2	Stop	Stop	X
●	●	●	→	Pattern 0~2	Stop	Stop	Stop
●	X	●	→	Pattern 0~2	Stop	X	Stop
X	●	●	→	X	Stop	Pattern 0~2 (Left)	Pattern 0~2 (Right)
X	X	●	→	X	Pattern 0~2 (Left)	X	Pattern 0~2 (Right)
X	●	X	→	X	Stop	Main-sub full mix	X
X	X	X	→	X	Main-sub full mix	X	X

Left-right output patterns

	In case of headphones		In case of SP1 & SP2	
Selected Pattern	Left side	Right side	SP1 or Built-in	SP2
Pattern 0	Main-sub full mox	Main-sub full mix	Main-sub full mix	Main-sub full mix
Pattern 1	Main : Full sound Sub : 1/4 sound	Main : 1/4 sound Sub : Full sound	main : Full sound Sub : 1/4 sound	Main : 1/4 sound Sub : Full sound
Pattern 2	Main	Sub	main	Sub

This is a reverse function and left-right changeover is possible.

Table 14

Main VHF/UHF Band Front-End and Sub Receiver System

The VHF and UHF band receiver circuit is configured with two systems, a main band (FM/ AM/ SSB/ CW/ FSK) and a sub-band (FM/AM), each of which has a VHF and a UHF band path.

In the main band, the first IF is 41.895MHz and the second IF is 10.695MHz and the signal lower hetero to the second IF is sent to the TX-RX1 unit (X57-605) and linked to the second IF, which is shared by the other bands. The sub-band is a double conversion where the first IF is 58.525MHz and the second IF is 455kHz. It is configured so that detected AF signals are sent to the control unit (X53-391).

■ VHF/ UHF band front end

The circuit operation of the sub-receiver unit differs depending on whether it is for K destination or others. The circuit operation for each of the destinations is described below.

• K destination

The incoming signal from the VHF band antenna terminal passes through the TX/RX changeover relay (K2) in the filter unit (X51-315) and goes to the TX-RX2 unit (X57-606). Then, it passes through the 12dB ATT circuit and is divided to the 136~155MHz path and the 118~136MHz, 155~174MHz and 220~300MHz path by the L distribution circuit. The 136~155MHz signal passes through a 2-pole BPF (band-pass filter) and enters the pre-amplifier (Q15). The amplified receive signal is again distributed to the paths for the main and sub receiver units by the L distribution circuit.

The signal distributed to the main receiver unit passes through the 2-pole variable tuning BPF, is amplified by the second amplifier (Q24) and goes to the mixer (IC4) for the main band common to the VHF and UHF bands through the variable tuning BPF. The 2-pole x 2-stage BPF for the main band VHF controls the tuning frequency by output from the D/A of the TX-RX1 unit (X57-605).

CIRCUIT DESCRIPTION

The 118~174MHz signal distributed to the sub-receiver unit passes through a variable tuning filter and is amplified by the second amplifier (Q24). Then, it passes through the 2-pole variable tuning BPF, and the 220~300 MHz signal is amplified by Q23 and is then input into the mixer (IC5) for the sub-band common to the VHF and UHF bands. The 1-pole and 2-pole BPFs for the sub-band VHF also controls the tuning frequency by the output from the D/A of the TX-RX1 unit (X57-605).

The incoming signal from the UHF band antenna terminal enters the UHF section of the final unit (X45-360), passes through the HPF and LPF and goes to the TX-RX2 unit (X57-605). Then, it passes through the 12dB ATT circuit and goes to the pre-amplifier (Q14). The amplified receive signal is distributed to the paths of the main and sub-receiver sections by the L distribution circuit.

The signal distributed to the main receiver section passes through the 3-pole variable tuning BPF and is amplified by the second amplifier (Q21). Then, it passes through the 3-pole variable tuning BPF and is input into the mixer (IC4) for the main band.

This 3-pole x 2 stage BPF for the UHF also controls the tuning frequency by the output from the D/A of the TX-RX1 unit (X57-605).

The 438~450MHz signal distributed to the sub-receiver section passes through the SAW filter (L29), is amplified by the second amplifier (Q25), and passes through another SAW filter (L50). The 300~438MHz and 450~512MHz signals are amplified by Q19 and goes to the mixer (IC5) for the sub-band.

- **E, E2 destinations**

Then, the signal passes through the 12dB ATT circuit and the 2-pole BPF (band-pass filter) and enters the pre-amplifier (Q15). The amplified receive signal is distributed to the paths of the main and sub receiver sections by the L distribution circuit.

The signal distributed to the sub-receiver section passes through a variable tuning filter and is amplified by the second amplifier (Q22). Then, it passes through the 2-pole tuning BPF, and goes to the mixer (IC5) for the sub-band common to the VHF and UHF bands. The 1-pole + 2-pole BPFs for the sub-band VHF also control the tuning frequency by the output from the D/A of the TX-RX1 unit (X57-605).

The signal distributed to the sub-receiver section passes through the SAW filter (L29), is amplified in the second amplifier (Q25), passes through another SAW filter (L50) and goes to the mixer (IC5) for the sub-band.

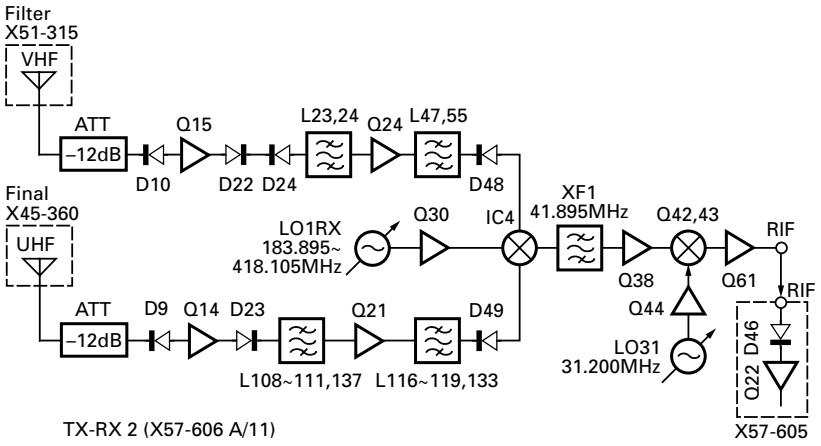

Fig. 5 Main band receiver section

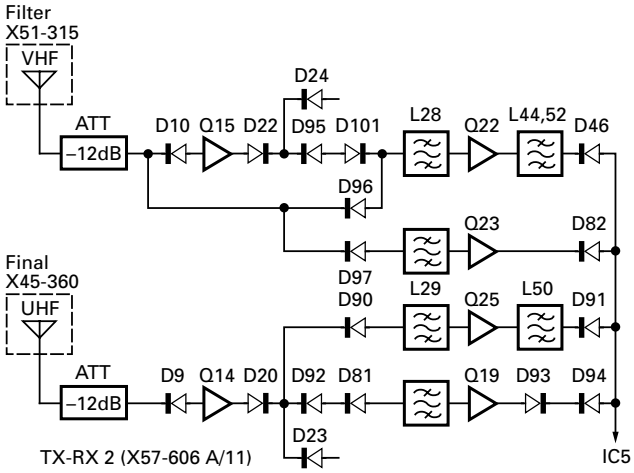

Fig. 6 Sub band receiver section

CIRCUIT DESCRIPTION

■ Main receiver IF section

The signal input to IC4 is mixed with the signal produced by amplifying the first local oscillator RXLO1 from the PLL section by Q30 and lower hetero to the first IF of 41.895MHz. Then, it passes through the MCF (XF1) and AGC amplifier (Q38) and goes to the second mixer (Q42 and 43). The signal input to the second mixer is mixed with the signal produced by amplifying the second local oscillator 21.2MHz from the PLL section by Q44 and lower hetero to the second IF of 19.695MHz. The signal then passes through a temperature compensating resistor and the IF amplifier (Q61) and is sent to the TX-RX1 unit (X57-605).

■ Sub receiver IF section

The signal input to IC5 is lower hetero to the first IF of 58.525MHz. In the VHF band, the local oscillator SLO1 from the PLL section is divided into two by the divider (IC6) and passes through amplifier (Q23). In the UHF band, the IF signal passes through amplifier (Q33) and is input to IC5. The IF signal passes through the MCF (XF2), passes through the post amplifier (AGC amplifier in the AM mode) Q37 and goes to the FM IC (IC7). The local oscillator is supplied to IC7 by the 58.07MHz crystal oscillator (X1) and is lower hetero to the second IF of 455kHz by a mixer in the IC.

The circuit operation when the signal passes through a ceramic filter after lower hetero is different for K destination and E destination. The circuit operation for each of the destinations is explained below.

• K destination

In FM mode, the signal passes through a ceramic filter (CF1), is quadrature-detected, and the resulting signal is output.

• E, E2 destinations

The signal passes through a ceramic filter (CF1) in FM WIDE mode and it passes through a ceramic filter (CF2) in FM NARROW mode. The signal is then quadrature-detected and the resulting signal is output.

In AM mode, a 455kHz signal passes through the AGC amplifier (Q51) and amplifier (Q48 and Q45) and is detected by D58. The detection signal retrieved for the AGC is rectified, passes through the DC amplifier (Q39) for AGC control and goes to the Q37 gate terminal (G2).

The FM/AM detection signal is switched by the multiplexer (IC8). Then, it is amplified by the operational amplifier (IC9) and output to the control unit (X53-391).

■ Squelch voltage and S-meter voltage of the sub receiver section

The S meter voltage is introduced to the A/D through a LPF for RSSI output of the FM IC (IC7).

The squelch voltage is supplied to the A/D by passing the detection output of the FM IC through a filter amplifier in the FM IC, amplifying it with the noise amplifier (Q63), and rectifying it with D83.

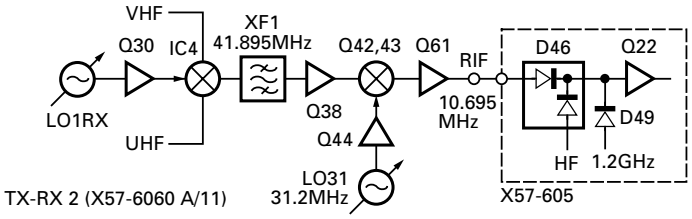

Fig. 7

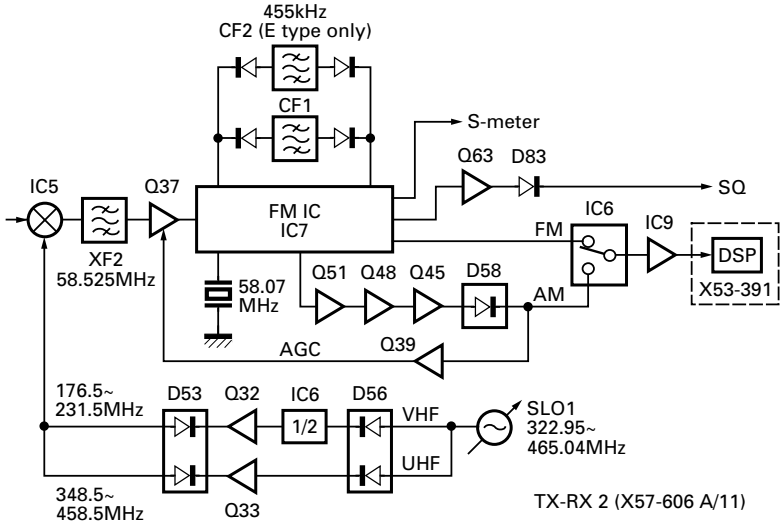

Fig. 8

CIRCUIT DESCRIPTION

Ref No.	XF1	XF2	XF3	CF1	CF2
Parts No.	L71-0566-05	L71-0565-05	L71-0582-05	L72-0984-05	L72-0986-05
Nominal center frequency	41.895MHz	58.525MHz	41.795MHz	455kHz	455kHz
Pass bandwidth	3dB : ±7.5kHz	3dB : ±7.5kHz	3dB : ±15kHz	6dB : ±7.5kHz or more 50dB : ±15kHz or less	6dB : ±4.5kHz or more 50dB : ±10kHz or less
Ripple	1.0dB or less	1.0dB or less	1.0dB or less	2.0dB or less	2.0dB or less
Insertion loss	3.0dB or less	3.5dB or less	1.5dB or less	6.0dB or less	6.0dB or less
Guaranteed attenuation	Fo+(500~1000)kHz Fo–(200~1000)kHz 70dB or more	Fo±1MHz 80dB or more	Fo–(500~1000)kHz 50dB or more	Fo±100kHz 35dB or more	Fo±100kHz 35dB or more
Cener	–	–	–	455kHz±1.0kHz	455kHz±1.0kHz
Terminating impedance	960Ω//1.0pF CC=7.0pF	350Ω//4.0pF CC=15.5pF	960Ω//1.0pF	1.5kΩ	2.0kΩ
Spurious	Fo±1.0MHz 40dB or more	Fo±1.0MHz 40dB or more	–	–	–

CF2 : Only E destination

Table 15 Filters rating (TX-RX 2 unit : X57-606)

1.2GHz Unit Receiver Section

The incoming signal from the antenna (12ANT) passes through a filter, is amplified in the receiver RF amplifier (Q11 and 12) and input to the first mixer (Q10).

The signal is converted to the first IF (135.495MHz) in Q10, passes through the MCF (XF1) and the AGC amplifier (Q9) and enters the second mixer (Q7 and Q8).

The signal is converted to the second IF (10.695MHz) in Q7 and Q8, amplified in the receiver IF amplifier (Q303) and sent to the TX-RX1 unit (X57-605).

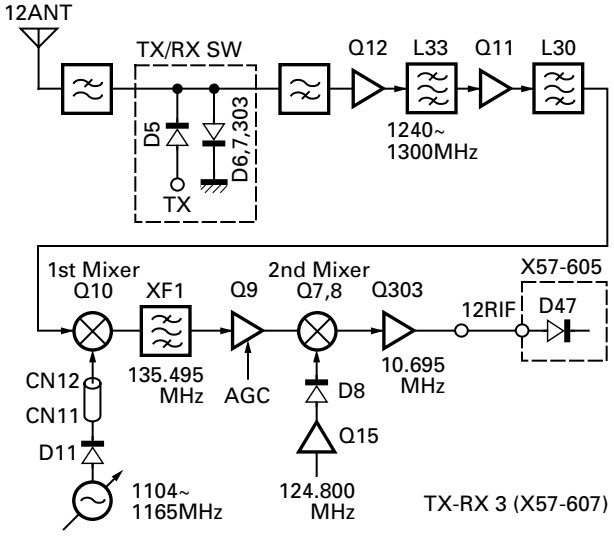

Fig. 9

CIRCUIT DESCRIPTION

Transmit System IF Section

■ Transmission IF

The details of the processing by the DSP depend on the mode.

- **Modes other than FM**

Transmission bandwidth change, speech processor and microphone gain control are performed in the AF stage. A 12kHz IF signal is produced after PSN modulation and output modulation control.

- **FM mode**

The baseband processing in the AF stage is carried out by the DSP and a VCXO (voltage controlled X'tal Oscillator) is used as a modulator.

The transmit signal output from the control unit (X53-391) is switched by an analog SW (IC8) and is input to the balanced mixer (IC6). The 12kHz IF signal and local oscillator signal enters the IC6 and become a 10.595MHz signal. The local oscillator signal is generated by the DDS (IC602).

The 10.595MHz IF component is amplified by the IF amplifier (Q54) and passes through the 6kHz bandwidth crystal filter, then becomes a 10.595MHz IF signal by eliminating local oscillator signals. The diode switch (D90) changes between FM modulator output and non-FM 10.595MHz IF signals.

The temperature compensation of the transmitter circuit is done by the thermistor near the IF amplifier (Q54) and the thermistor on the input side of the IF amplifier (Q711). They reduce the gain at low temperatures and raise it at high temperatures.

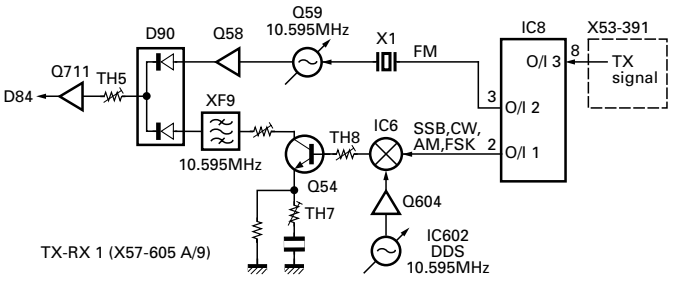

Fig. 10

The output signal from the IF amplifier (Q711) passes through D84, Q40, D82, D48, D80 and D81 and becomes the IF transmit signal for each band. D84 is a voltage controlled attenuator circuit. This circuit changes the attenuation level according to the control voltage (TGC), in the same way as the TGC (TX gain control) used in the TS-870 and TS-570 and is set to the adjusted attenuation level for each band. Q49 is an IF amplifier circuit with an ALC circuit. The gain is controlled by the voltage generated by the ALC circuit.

D82 is a voltage controlled attenuator circuit as D84. The attenuation level is minimum at full power and as the power decreases, the control voltage rises and the attenuation level increases. When the power is reduced, the gain will become relatively excessive if the IF gain is not lowered. It is set to an attenuation level adjusted by the PGC (Power Gain Control) accordance to the power of each band.

Q48 is an IF output buffer. It changes to the transmitter section of each band with a diode switch (D80, D81) to supply a 10.595MHz IF signal.

During transmission in the 144MHz and 420MHz bands, the signal is output to the TX-RX2 unit (X57-605), and during transmission in the 1.2GHz band, it is output to the TX-RX3 unit (X57-605).

In the 1.8~54MHz band, the frequency is converted to the final target transmit frequency in the TX-RX1 unit (X57-605).

The local oscillator frequency changes according to the band in second transmit mixer of Q46 and 47 to generate different IF frequencies. (TX third IF: 68.985MHz or 75.825 MHz)

D703 and D715 are used to change the tuning frequency of the local oscillator signal and D79, D78, D77 and D76 are used change the frequency of the IF filter (L102).

The variable tuning filter containing these variable capacitance diodes performs the coarse adjustment of the coil (L100, L99, L98, L96, L102) in the band (18.085MHz) where the IF is 75.825MHz. Then, it changes the tuning frequency control voltage from the D/A in the band (14.100MHz) where the IF is 68.985MHz and tunes it to the necessary frequency by readjusting the coil.

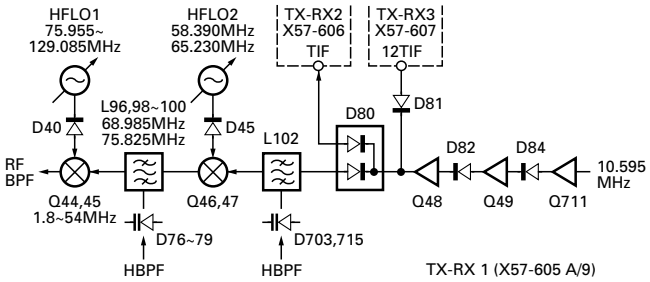

Fig. 11

CIRCUIT DESCRIPTION

The third IF signal is input to the third transmit mixer (Q44, 45).

A GaAs FET is used to obtain the satisfactory intermodulation characteristics. VR3 adjusts the second gate voltage to maximize the gain. VR2 adjusts the balance of the source current of two FETs and prevents the generation of spurious components by minimizing IF output leakage. It also adjusts the leakage of the IF signal (68.985MHz) to the minimum during 50MHz band transmission.

The signal with the target frequency passes through the BPF shared by the receiver section to eliminate spurious components. The transmitter circuit is separated from the receiver circuit to implement satellite communication, but only this BPF is shared to prevent generation of spurious components.

Finally, the signal is amplified to a sufficient level (approximately 0dBm) by the broadband amplifier and supplied to the final section. Q43 is a power MOS FET and provides an output of approximately 20dBm when the ALC is inactive.

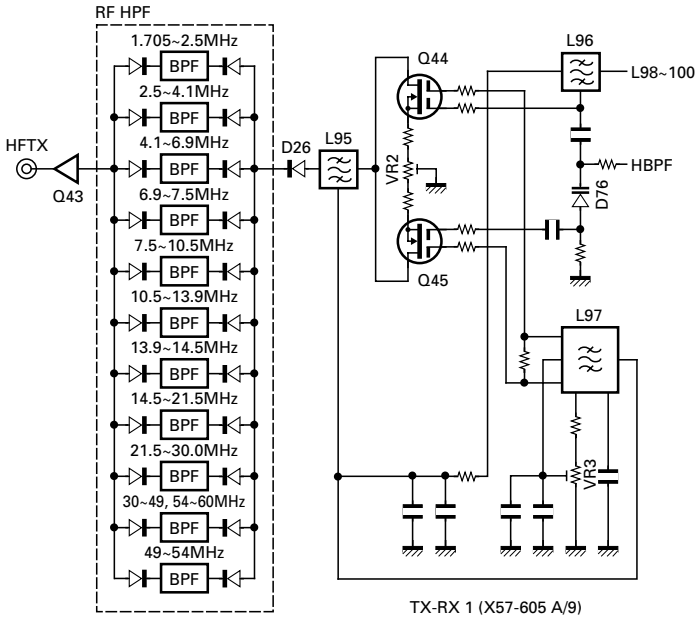

Fig. 12

■ ALC

The progressive and reflected wave signals detected by the final section in each band enters the TX-RX1 unit (X57-605) and is synthesized by a diode. It is synthesized simply because no signal is transmitted in multiple bands at the same time.

When the progressive signal voltage is input, it is divided by a resistor, and enters the differential amplifier composed of Q73 and Q74. When the voltage increases, the emitter voltage rises, the base current of Q74 decreases, and the collector voltage of Q74 also rises. When the voltage exceeds the base emitter voltage plus the emitter voltage (approximately 2.4V) of Q76, the base current of Q76 begins to flow and the voltage of the collector to which the ALC time constant CR is connected decreases. This collector voltage is buffered by Q78, the voltage is shifted by D108, and matched with the keying control voltage by Q79 and D111 to produce the ALC voltage. When the ALC voltage (2.7V when inactive) decreases, the second gate voltage of the IF amplifier (Q49) decreases and the gain lowers.

During AM transmission, Q75 turns on approximately 20ms after transmission, and the ALC voltage is controlled by the average power. The voltage output from the DAC (IC14) is applied to the base voltage of Q74, which is the reference voltage of the ALC. This DAC (IC14) is controlled by the adjustment value (POC) from the main microcomputer. In addition, the input voltage of the DAC fluctuates according to the power supply voltage and the output drops when the voltage is reduced.

■ SWR protection

The reflected wave detection signal is divided by the DAC (IC14) and input to the base of Q77. When this voltage increase, the collector current of Q77 increases and output power is limited.

■ Meter voltage

The progressive wave voltage is calculated as the power meter voltage, the reflected wave voltage is calculated as the progressive wave voltage and its value is input as the SWR meter voltage, and the ALC voltage is input as the ALC meter voltage. These voltages are input into the A/D converter of the main microcomputer.

■ Packet signal

The control unit contains a TNC and a changeover switch circuit that enables data signals to input from the ACC2 connector. (See the block diagram)

The 1200bps signal is processed by the DSP in the same way as for audio signals, but the 9600bps signal is input directly to the FM modulator without passing through the DSP.

CIRCUIT DESCRIPTION

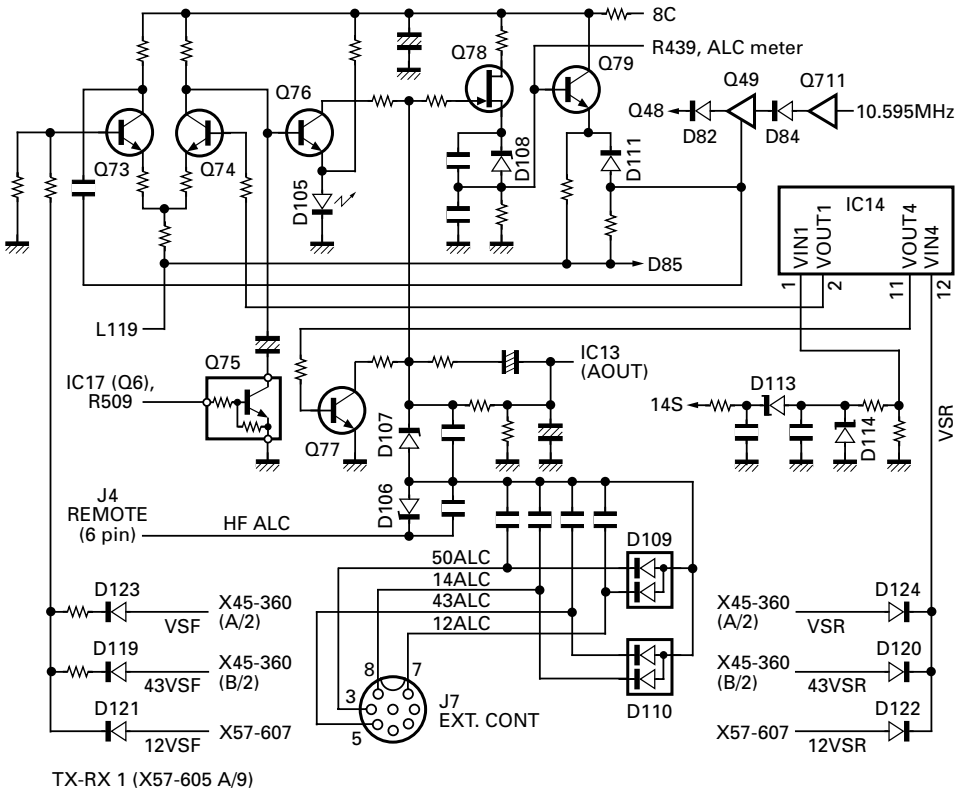

Fig. 13

VHF/UHF Band Transmitter Circuit (RF~IF)

The TIF (10.595MHz) signal input from the TX-RX1 unit (X57-605) first enters the mixers (Q46 and 47). The 31.2MHz signal from the PLL passes through the RF amplifier (Q50), enters the mixer as a local oscillator to output the 41.795MHz IF through both the signals. It passes through the 41.795MHz MCF (XF3) and enters the wideband diode mixer (D54) in the next stage, and upper hetero to a VHF/UHF band output signal. The local oscillator TXLO1 of the mixer is on a common line for both VHF and UHF band local oscillators, and the local oscillator signal is amplified by the VHF and UHF band broadband amplifier (Q34) and supplied to the mixer.

The signal converted to the VHF/UHF band is divided into a VHF band path and a UHF band path after it is output from the mixer.

The VHF band signal passes through a filter and a trap and is amplified in the 2-stage RF amplifiers (Q20, Q18), and the resulting signal goes to the wideband amplifier (IC3) common to the VHF and UHF bands.

The UHF band signal is amplified by the RF amplifier (Q17), passes through a 3-pole variable tuning BPF and is amplified by the amplifier (Q26). Then, it passes through a 2-pole variable tuning BPF and enters IC3. The total 5-pole variable tuning BPF controls the tuning frequency according to the control signal output from the D/A converter of the TX-RX1 unit (X57-605).

The signal amplified by IC3 is again divided into VHF band and UHF band paths by a diode switch and output to the final unit (VHF band: X45-360 A/2, UHF band: X45-360 B/2).

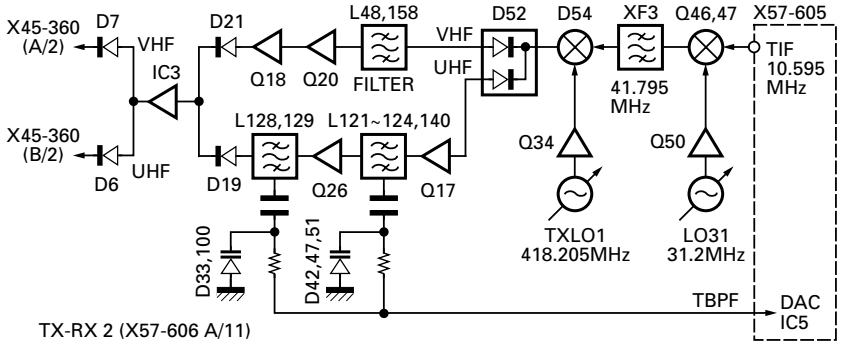

Fig. 14

CIRCUIT DESCRIPTION

Transmitter Final Amplifier

The final unit (X45-360 A/2) is composed of an HF and VHF band final amplifier, an antenna turner matching circuit, and a power supply circuit.

The LPF section and antenna tuner detection circuit are located in the filter unit (X51-315).

The 1.8~144MHz band is amplified by the final unit, but it operates in the broadband up to the drive amplifier. The final unit amplifies signals using independent amplifiers in the 8~50MHz and 144MHz bands. The amplifiers are switched with a diode switch (D1).

■ Q1 : First stage amplifier

This amplifier uses a FET. It has frequency characteristics so that the gain increases in the 144MHz band.

■ Q2 : Pre-drive amplifier

This amplifier uses a bi-polar transistor. It has unique frequency characteristics.

■ Q3 and 4 : Drive amplifier

This is a push-pull type amplifier. It amplifies a signal with a broadband up to the 144MHz band, then the signal is branched to the HF and 144MHz bands through a relay.

■ Q6 and 7 : HF final amplifier

This amplifier uses a bipolar transistor with push-pull. It amplifies a signal up to the 54MHz band, using an output transformer with a coaxial cable. It outputs the signal to the LPF section through an effective and light matching circuit in the 50MHz band.

■ Q101 and 102: 144MHz final amplifier

A 144MHz band signal passes through the HPF and enters the branch circuit with two amplifiers.

It functions as a parallel amplifier that branches the signal with the same phase, amplifies it with the Q101 and 102 amplifiers and re-synthesizes it. As a result a 100W output is produced.

Since the output matching section is an LPF type, it attenuates harmonics as well. After the output has been synthesized, it detects the power of the progressive wave and reflected wave with a directional coupler according to the strip line, and outputs it to the LPF section.

■ LPF section

In the 1.8~50MHz band, the signal passes through the LPF as shown in Table 3.

It has an independent LPF circuit and an antenna changeover circuit for the 144MHz band.

The signal output from the LPF passes through the detection circuits, the transmission/reception changeover relay (K1), the antenna tuner changeover relay (K3) and the antenna changeover relay (K4) and is output to ANT1 or ANT2.

Select signal	Frequency
2M	1.8~ 2.0
4M	2.0~ 4.1
7M	4.1~ 7.5
14M	7.5~14.5
21M	14.5~21.5
28M	21.5~30.0
50M	49.0~54.0

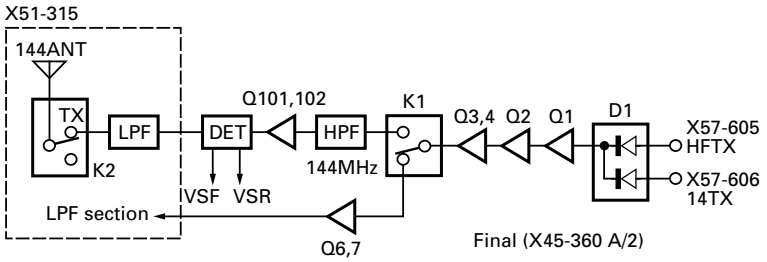

Fig. 15

downloaded by
www.radioamatore.info

CIRCUIT DESCRIPTION

■ Progressive wave and reflected wave output circuits

The signal is detected by L7, D3 and D4. A voltage output corresponding to the progressive wave and reflected wave is produced by synthesizing the magnetically combined component by L7 with the corrected electrostatically combined component by TC1 and C9 and detecting the resulting signal.

It is adjusted by TC1 so that the reflected wave voltage under a 50Ω load is minimized. VR1 adjusts the frequency characteristics in the 50MHz band.

These outputs are synthesized with detected output of the 144MHz band and are fed to the TX-RX1 unit (X57-605).

■ Antenna turner detection circuit

The passing current is converted to voltage by L9, and the voltage is stepped down and detected by L10. One of these components is buffered by Q1 and Q2 and rectified by Q3 and Q4, are input to the phase comparator (IC2) . The IC determines the IC2 Q output "H" or "L" according to the phase difference with a D-flip-flop. The other component is detected by diodes (D10 and D11) and the amplitude difference is compared with the comparator (IC1).

The capacitor capacitance on the input side is changed according to the phase difference detection output, and the capacitor capacitance on the output side is changed according to the amplitude difference detection output.

■ UHF final unit (X45-360 B/2)

The 430MHz band transmit signal output from the TX-RX2 unit (X57-606) is amplified to 50W by four amplifiers (Q901, 902, 903 and 905). The final unit consists of single amplifiers Q901, 902, 903 and 905. The input and output of the final stage is composed of micro-strip lines. The progressive wave and reflected wave detection circuit is also made of micro-strip lines and used for power control and reflected wave protection.

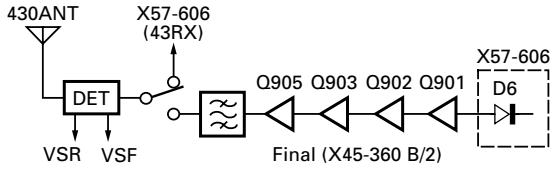

Fig. 17

1.2GHz Unit Transmitter Section

The 10.595MHz transmit signal from 12TIF is amplified in the sending IF amplifier (Q304). This signal is input into the sending mixer (Q1 and Q2).

The 135.395MHz signal converted in Q1 and 2 passes through the MCF (XF2) and IF amplifier (Q3), is input into the diode mixer (D1) and converted to 1240~1300MHz. This signal is amplified to approximately 0dB in the sending RF amplifier (IC1 and Q5), then input to IC2.

It is amplified to approximately 1W in the drive power module (IC2) and to approximately 10W in the final power module (IC3), then sent to the antenna terminal (12ANT).

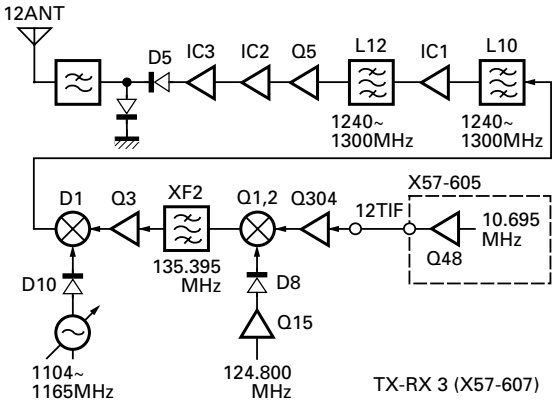

Fig. 18

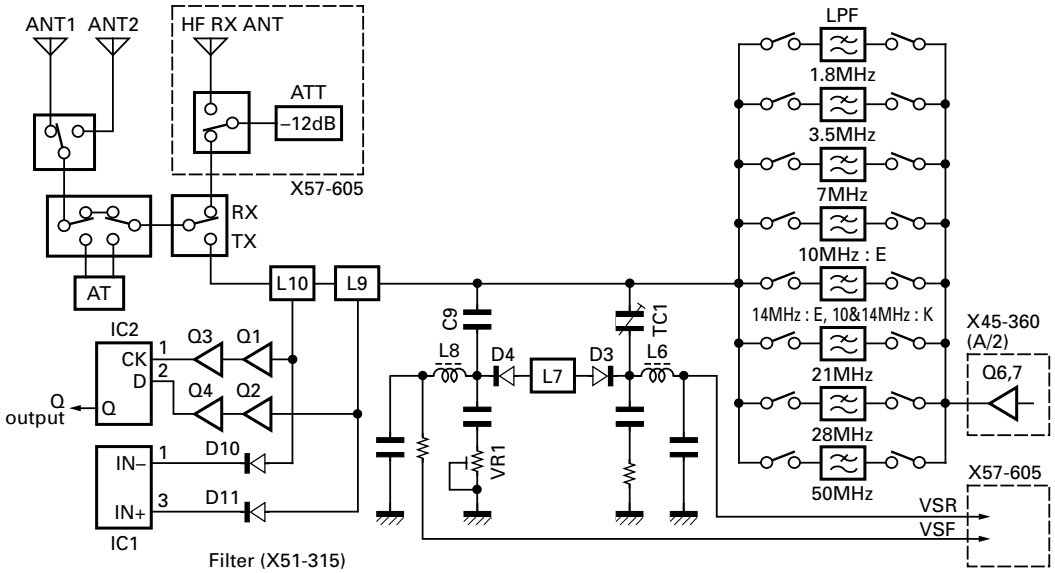

Fig. 16

CIRCUIT DESCRIPTION

Digital Control Circuit

■ Outline

The TS-2000/X control circuit has a multi-chip configuration centered around a main microcomputer (IC8), and contains a latch circuit for input/ output, a TNC and a DSP. Refer to the digital control block diagram.

■ Main microcomputer peripherals

Four serial communication devices utilizing a UART function (panel microcomputer, TNC, mobile head and PC serial port) are connected to the main microcomputer. An EEPROM (IC7) for backup and a DTMF decoder (IC12) for DTMF signal detection are also connected to the microcomputer.

The input/output circuit and DSP are connected through an address bus and a data bus. The bus to the DSP is connected through 5V ↔ 3V voltage conversion ICs (IC9, IC10, and IC11)

The microcomputer operates with an internal core voltage of 3.3V, an external I/O voltage of 5V and an internal frequency of 22.1184MHz (11.0592MHz x 2).

■ TNC

The TNC is the same as the one used in the TH-D7. The TNC uses a lithium battery to back up various settings. When a 9600bps communication speed is used, the TNC analog signal is connected directly to the transmitter/receiver circuit without passing through the DSP.

■ Input/output latch circuit

A latch IC is used in stead of several input/output ports. Since the latch IC has a latch function only, the latch circuit contains an input latch logic circuit (IC13, IC14, IC15) and an output latch logic circuit (IC16, IC17, IC18) to generate the signals required for the latch IC using the main microcomputer's address bus information. This configuration is also used for the latch IC of the DSP section.

■ Other peripheral circuits

The main microcomputer is connected with other peripheral circuits, such as a reset circuit that generates a reset signal, a reduced voltage detection circuit that detects reduced voltage and generates a reduced voltage signal, and an over-voltage detection circuit that detects over-voltage and generates an over-voltage signal.

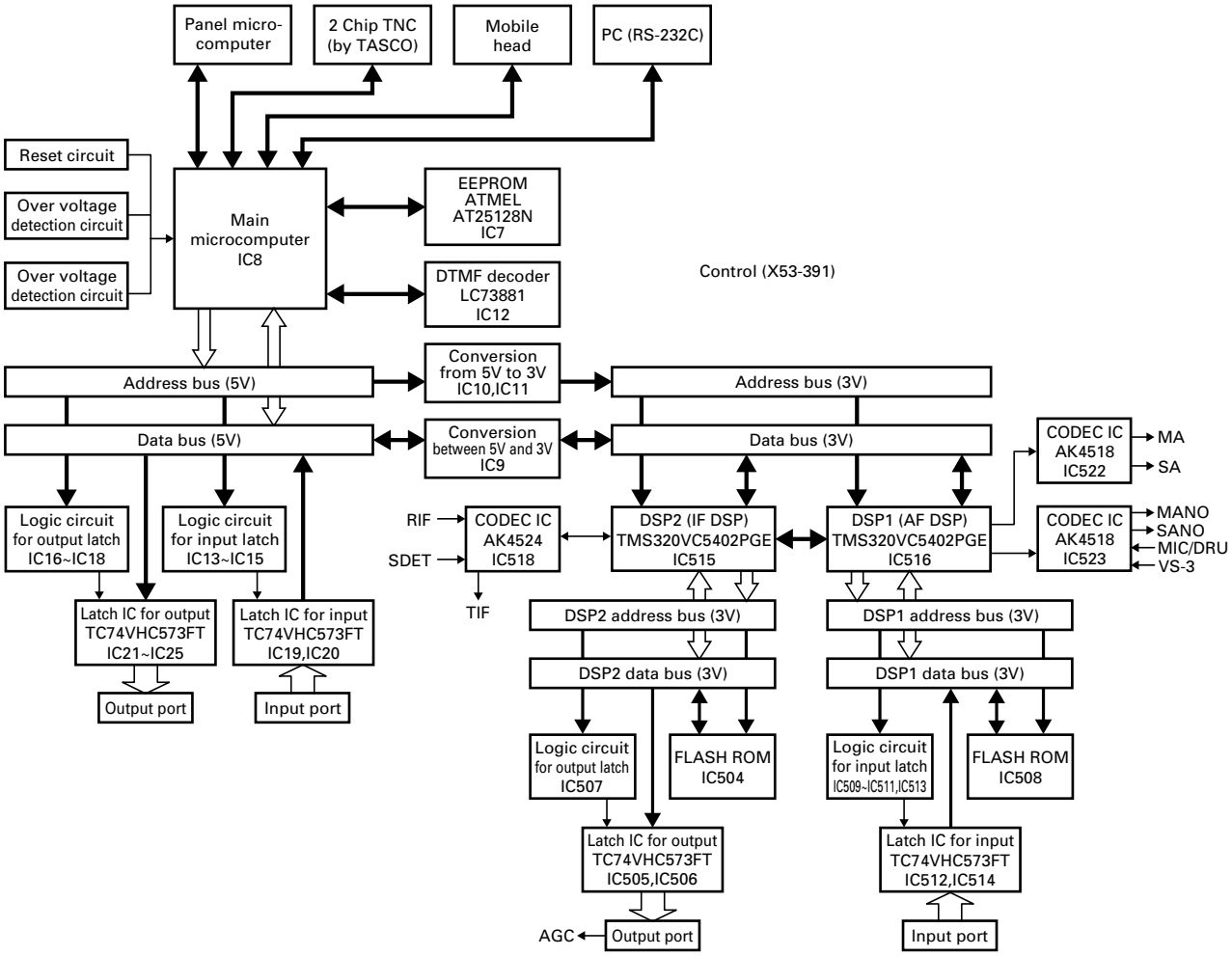

Fig. 19 Digital control block diagram

CIRCUIT DESCRIPTION

■ Firmware

The main microcomputer firmware includes adjustment firmware and user firmware. When repairs or adjustments are made in service, the user firmware must be rewritten to make adjustment firmware. It must be restored to the original user firmware after repairs or adjustments. The adjustment firmware provides a warning display and a warning sound when the power goes on.

DSP Circuit

■ Outline

The TS-2000/X DSP circuit is composed of two DSPs (IC515 and IC516) and CODEC ICs (IC518, IC522 and IC523), an input latch circuit, flash ROM (IC504 and IC508). It is connected with the main microcomputer (IC8) by an address bus and a data bus through the voltage conversion ICs (IC9, ID10 and IC11). The SSB, CW, AM and FSK detection, modulation and AGC operation are done by the DSP, and digital processing (digital filtering, noise reduction, etc.) is performed in all modes.

■ DSP

The DSP operates with an internal core voltage of 1.8V, an external I/O voltage of 3.3V and an internal frequency of 99.5328MHz (11.0592MHz x 9).

The two DSPs perform the respective IF processing and AF processing. The IF processing is done by DSP2 (IC515) and a 24 bit CODEC IC (IC518) is connected to it. DSP2 performs detection, modulation, AGC processing and IF digital filtering. It is designed so it does not exceed the processing time, even if the main band transmission and reception and sub-band reception are done simultaneously. An output latch circuit is connected to DSP2 to convert the analog AGC voltage signal from digital to analog before output. The conversion is done by the ladder resistance method.

The AF processing is done by DSP1 (IC516) and a 16 bit CODEC IC (IC522, IC523) is connected to it. DSP1 performs the speech processing (signaling generation, detection, noise reduction, speech filtering, and various volume processing). The input latch circuit is connected to DSP1 and various signals from the main microcomputer and the microphone selection signal are input into it.

■ Flash ROM

The respective programs and data are stored in the Flash ROM (IC508 and IC504) connected to DSP1 and DSP2.

■ CODEC IC

A 24 bit CODEC IC (IC518) is used as the IF signal system. DSP2 carries out 32 bit digital processing for detection and modulation. The operation of this IC is controlled by the main microcomputer.

Two 16 bit CODEC ICs (IC522 and IC523) are used as the AF signal system. These IC outputs directly enter the AF amplifier, are amplified and then output from the speaker. The IC input consists of the MIC input and the optional speech synthesis unit (VS-3).

The various timing signals required by both CODEC ICs are generated and supplied by a 12.288MHz quartz crystal and a peripheral circuit.

■ Communication between DSPs

DSP1 and DSP2 are connected via serial communication and perform such interchanges as audio signals for transmission processed in DSP1, received speech signals detected in DSP2 and information from the DSP1 input latch circuit. If this interchange does not go well when the power starts up, a "DSP COMM" error will be displayed on the LCD and the fact that the DSPS is not operating will be notified to the main microcomputer. Likewise, when the content of the flash ROM is abnormal, a "DSP COMM" error is displayed.

DESCRIPTION OF COMPONENTS

FINAL UNIT (HF) (X45-360X-XX) (A/2)

Ref. No.	Use / Function	Operation / Condition
Q1,2	Predrive amplifier	HF/VHF band amplifier
Q3,4	Drive amplifier	HF/VHF band push-pull wide-band amplifier
Q6,7	Final amplifier	HF/50MHz band push-pull wide-band amplifier
Q8	Bias control	HF/50MHz band final stage bias current control
Q101,102	Final amplifier	VHF band push-pull wide-band amplifier
Q103	Bias control	VHF band final stage bias current control
Q201	Switching	ANT1 and ANT2 changeover relay control
Q202	Switching	AT relay control
Q203	Switching	HF RX antenna relay control
Q204	Switching	Fan control (high speed)
Q205	Switching	Fan control (low speed)
Q206	Switching	High power supply voltage protection
Q207	Switching	Power relay control (K201)
Q208~215	Switching	HF/50MHz band LPF band changeover
Q216,217	Switching	VHF band TX/RX changeover relay control
IC201,202	AVR	SB→8V
IC203	AVR	SB→10V
IC204	AVR	8V→5V
IC205	Extended I/O	LPF control signal serial-parallel
IC801	Extended I/O	AT input C control signal serial-parallel
IC802	Extended I/O	AT output C control signal serial-parallel
IC803	Extended I/O	AT coil control signal serial-parallel
D1	Switching	HF/VHF band drive input changeover
D2,3	Temperature compensation	Drive stage bias current control
D5	Switching	HF/VHF band drive stage bias changeover
D6	Surge absorption	Relay (K1)
D7,8	Temperature compensation	HF/50MHz band final stage bias current control
D101	High-frequency rectification	VHF band reflected wave detection
D102	High-frequency rectification	VHF band forward wave detection
D103,104	Temperature compensation	VHF band final stage bias current control
D201	Surge absorption	Power surge protection
D202	Surge absorption	Fan
D203	Zener diode	Over voltage detection
D204	Surge absorption	Relay (K201)
D206~209	Surge absorption	IC205 output line protection
D210	Reverse current prevention	VHF band TX/RX relay control line
D801~824	Surge absorption	Antenna tuning relay (K801~824)

FINAL UNIT (430) (X45-360X-XX) (B/2)

Ref. No.	Use / Function	Operation / Condition
Q901,902	Predrive amplifier	UHF band amplifier
Q903	Drive amplifier	UHF band amplifier
Q904	Bias control	Final stage bias current control
Q905	Final amplifier	UHF band final stage amplifier
D901	Temperature compensation	Drive stage bias current control
D902,903	Temperature compensation	Final stage bias current control
D904	High-frequency rectification	Forward wave voltage detection
D905	High-frequency rectification	Reflected wave voltage detection
D906	Switching	Antenna switch
D908,909	Switching	Antenna switch

FILTER UNIT (X51-315X-XX)

Ref. No.	Use / Function	Operation / Condition
Q1	Signal amplifier	AT phase signal amplifier
Q2	Signal amplifier	AT amplitude signal amplifier
Q3	Signal amplifier	AT phase signal amplifier
Q4	Signal amplifier	AT amplitude signal amplifier
IC1	Comparator	AT control amplitude signal discrimination
IC2	D flip-flop	AT control phase signal discrimination
D2	Surge absorption	Relay (K2)
D3	High-frequency rectification	HF/50MHz band reflected wave detection
D4	High-frequency rectification	HF/50MHz band forward wave detection
D5~7	Surge absorption	Relay (K1,K3,K4)
D8,9	Surge absorption	Lightning surge protection
D10	High-frequency rectification	AT phase signal detection
D11	High-frequency rectification	AT amplitude signal detection
D201,251	Surge absorption	Relay (K201/K202, K251/K252)
D301,351	Surge absorption	Relay (K301/K302, K351/K352)

DESCRIPTION OF COMPONENTS

Ref. No.	Use / Function	Operation / Condition
D401,451	Surge absorption	Relay (K401/K402, K451/K452)
D501,551	Surge absorption	Relay (K501/K502, K551/K552)

CONTROL UNIT (X53-391X-XX)

Ref. No.	Use / Function	Operation / Condition
Q1	Switching	TT signal output control of external AT
Q2	Switching	TT signal input control of external AT
Q3	Switching	TS signal output control of external AT
Q4	Switching	TS signal input control of external AT
Q5	Switching	Power on at L level
Q9,10	Switching	
Q13	Buffer amplifier	9600 bps RX signal
Q14	Buffer amplifier	1200 bps RX signal
Q15,16	Amplifier	Waveform shaping of TNC TX signal
Q17	Switching	Backup processing control of panel microcomputer
Q18	Switching	RS-232C related power source (X57-605 A/9)
Q19,20	Switching	
Q501	Switching	
IC1	Reset IC	For main microcomputer
IC2	AVR	Digital system 5V generation
IC3	AVR	5V constantly on
IC4	3.3V AVR for DSP	3.3V
IC5,6	Analog switch	Main microcomputer ADC input changeover
IC7	EEPROM	For storage of various set values
IC8	Main microcomputer	Primary main unit operation
IC9	Conversion between 5V and 3V	Two-way conversion
IC10,11	Conversion from 5V to 3V	Main microcomputer and DSP data conversion
IC12	DTMF decoder IC	For DTMF decoding
IC13~18	Input/output port logic	Logic of latch IC used as input/ output port
IC19,20	Input port	Used as input port for main micro-computer
IC21~25	Output port	Used as output port for main micro-computer
IC26	TNC microcomputer	Dedicated TNC microcomputer
IC27	OP amplifier	A/2 : 1200 bps RX AF amplifier B/2 : 9600 bps RX AF amplifier
IC28	TNC logic circuit	TNC logic
IC29	OP amplifier	A/2 : 1200 bps RX AF amplifier B/2 : 9600 bps RX AF amplifier

Ref. No.	Use / Function	Operation / Condition
IC30	Comparator	Waveform shaping of modem TX signal
IC31	AND	Sends DSP1 and DSP2 WAIT signal to CPU through AND circuit
IC32,33	Reset IC	
IC501	AVR	3V within control
IC502,503	1.8V AVR for DSP	1.8V
IC504	Flash ROM for DSP2	For program and coefficient storage
IC505,506	For DSP port output	Used as output port (AGC output)
IC507	Input/output port logic	Logic of latch IC used as input/ output port
IC508	Flash ROM for DSP1	For program and coefficient storage
IC509	Input/output port logic	Logic of latch IC used as input/ output port
IC510	Input/output port logic	
IC511	Input/output port logic	Logic of latch IC used as input/ output port
IC512	For DSP port input	Used as input port
IC513	Input/output port logic	Logic of latch IC used as input/ output port
IC514	For DSP port input	Used as input port
IC515	DSP	For IF processing
IC516	DSP	For AF processing
IC517	Analog AGC buffer	Analog AGC voltage buffer
IC518	CODEC (24 bit)	RIF input, TIF output
IC519,520	For CODEC clock division	
IC521	For CODEC clock division	Operation at 12.288MHz frequency
IC522,523	CODEC (16 bit)	Microphone input, AF output
IC524~529	Buffer for analog signal input/output	Connection to CODEC input/output
IC530	Serial/parallel	For microphone input changeover
IC531~534	Analog switch	For input/output changeover
IC535	Buffer for analog signal input/output	Connection to CODEC input/output
D5,6	Reverse current prevention	
D11,12	Reverse current prevention	
D13	Reference voltage source	
D14~17	Reverse current prevention	
D501~504	Reverse current prevention	

DESCRIPTION OF COMPONENTS

DISPLAY UNIT (X54-3320-00)

Ref. No.	Use / Function	Operation / Condition
Q1~3	AVR	LCD backlight
IC1	LCD driver	LCD 7-segment driver (B-SEG)
IC2	LCD driver	LCD 7-segment driver (A-SEG)
IC3	LCD driver	LCD dot segment driver
IC4	Serial/parallel	LED control, backlight dimmer control
D1	LED	On when VOX is selected
D2	LED	On when PROC is selected
D3~9	LED	Key illumination

TX-RX 1 UNIT (X57-605X-XX)

Ref. No.	Use / Function	Operation / Condition
Q1	RF mute	On in HF/50MHz TX mode
Q2	Switching	On in HF/50MHz RX mode
Q3	Switching	Q2 control
Q4	Switching	Dedicated external RX antenna changeover relay control
Q5	Switching	HF/50MHz RF ATT control
Q6	Switching	On in 50MHz TX mode
Q7~10	RX 1st mixer	RX 1st IF 69.085/75.925MHz
Q11	Switching	Off when HF/50MHz preamplifier on
Q12	RF amplifier	When HF-21.5MHz
Q13	Amplifier	1st local oscillation amplifier
Q14,15	Switching	Q12 control
Q16,17	Switching	Q16 turns on when first IF change-over control is 75.925MHz
Q18	Amplifier	RX 1st IF 69.085/75.925MHz
Q19,20	RX 2nd mixer	Converts RX 1st IF to 10.695MHz
Q21	Switching	Reserved
Q22	Amplifier	For NB 10.695MHz
Q25	Amplifier	RX 2nd IF amplifier 10.695MHz
Q26	Amplifier	NB amplifier 10.695MHz
Q27	DC amplifier	NB AGC amplifier
Q28	Amplifier	NB amplifier 10.695MHz
Q29	Switching	On at time of NB blanking
Q30	Buffer amplifier	Impedance changeover
Q31	Switching	On at time of NB blanking
Q32	Amplifier	RX 3rd local oscillation amplifier (11.150MHz)
Q33	Switching	On when 1st IF frequency is 69.085MHz
Q34	Switching	Creates RXB in FM mode
Q37	Switching	Creates RXB in non-FM mode
Q38	Amplifier	3rd IF amplifier (455kHz)
Q40	Switching	On during RX in non-FM mode
Q41	Amplifier	RX 4th local oscillation amplifier (467kHz)
Q42	Buffer amplifier	4th IF frequency (12kHz)
Q43	Amplifier	HF/50MHz TX drive amplifier
Q44,45	TX 3rd mixer	Converts 68.985/75.825MHz to TX frequency
Q46,47	TX 2nd mixer	Converts 10.695MHz to 68.985/75.825MHz
Q48	Buffer amplifier	10.695MHz
Q49	TX 2nd IF amplifier	10.695MHz
Q51	Switching	Keying control
Q52	DC buffer amplifier	ALC keying control
Q53	Switching	On during TX in non-FM mode
Q54	TX 2nd IF amplifier	10.695MHz
Q57	Switching	On during transmission in FM mode
Q58	Limiter	FM modulation signal limiter (elimination of AM component)
Q59	Oscillator	FM oscillator, modulation 10.595MHz
Q60	Switching	On during TX in non-FM mode
Q61,62	Mute	On when main and sub are simultaneously AF muted
Q63,64	DC-DC oscillator	–6V generation
Q65	Switching	On when relay for HF band linear is used
Q66	Switching	On when relay for HF band linear is transmission
Q67	Switching	On when relay for HF band linear is used
Q69,70	AVR	AVR for mobile controller (Power about 9.4V)
Q71,72	Switching	50MHz/VHF/UHF/1.2GHz band external linear control
Q73,74	Amplifier	ALC amplifier
Q75	Switching	On in AM mode, makes it an average value type ALC
Q76	Amplifier	ALC amplifier
Q77	Switching	Turns on and lowers the power at time of protection
Q78,79	Amplifier	ALC amplifier
Q80~91	Switching	Produces the respective TXB and RXB from 8C to HF/50MHz, VHF band, UHF band and 1.2GHz bands. The synthesis of the TXB becomes IF TXB and the synthesis of the RXB becomes IF RXB. This control voltage is necessary for simultaneous TX/RX, such as for satellite communication.
Q92	Switching	Cancels the time constant for VSF and VSR voltage lines during antenna tuning
Q93	Buffer amplifier	Buffer amplifier for external modulation input signal

DESCRIPTION OF COMPONENTS

Ref. No.	Use / Function	Operation / Condition
Q94,95	Buffer amplifier	Buffer amplifier for ANO output of main and sub band
Q96	Switching	External squelch output of main and sub bands (open collector)
Q97	DC buffer amplifier	Ripple filter for AF IC (IC9) power supply
Q101~112	Switching	On when RF BPF SW is selected
Q601	Amplifier	31.2MHz
Q602	Buffer amplifier	RX 4th local oscillator (467kHz)
Q603	Amplifier	31.2MHz
Q604	Buffer amplifier	TX 1st oscillator (10.595MHz)
Q605	Amplifier	31.2MHz
Q606	Buffer amplifier	RX 3rd local oscillator (11.150MHz)
Q607,608	Switching	On when 1st IF frequency is 69.085MHz
Q609	Switching	DC switch
Q700,701	Mixer	RX 3rd mixer and 3rd IF frequency (455kHz)
Q702	Switching	Gain correction, on when RX 1st IF is 69.085MHz
Q703	Switching	L69 tuning correction, on when RX 1st IF is 69.085MHz
Q704	Switching	On during TX in FM mode
Q705	Amplifier	On RF amplifier is 21.5~60MHz
Q706~708	Switching	On at time of Q705 operation
Q709	Buffer amplifier	455kHz
Q710	Amplifier	Squelch noise amplifier
Q711	TX 2nd IF amplifier	10.695MHz
Q712,714	Switching	On during TX in FM mode
Q715	Amplifier	DRU output amplifier
Q800	Switching	On when FUNC switch is selected
Q801	AVR	For LED
Q802	Switching	On in main band TX mode
Q803	AVR	For LED
Q804	Switching	On when main band BSY
Q805	AVR	For LED
Q806	Switching	On in sub band TX mode
Q808	Switching	On when sub band BUSY
Q811	Switching	On when modem 9600 bps is selected
Q813	Switching	On when modem STA is active
Q815	Switching	On when a modem is connected
Q817	Switching	On when MULTI ENC is sctive
Q819	Switching	On when sub receiver is on
Q820,822	Switching	On when key illumination is on
Q951	Switching	Reset control
IC1	FM IF	IF amplifier, Squelch
IC2	OP amplifier	A/2 : ALT voltage buffer B/2 : FM AF amplifier
IC3	Mixer	RX 4th mixer (Output : 12kHz)

Ref. No.	Use / Function	Operation / Condition
IC4	OP amplifier	A/2 : Unused B/2 : AGC reference voltage buffer
IC5	Extended I/O	RF BPF changeover control
IC6	Mixer	TX 1st mixer (Output : 10.595MHz)
IC7	Multiplexer	Receiver output, FM (AF) and non-FM (IF) changeover
IC8	Analog switch	Modulation input, FM (AF), non-FM (IF) and packet (AF) changeover
IC9	AF PA	Main and sub 2 channels
IC10	Level converter	RS-232C level and 5V conversion
IC11	Buffer amplifier	Voltage buffer
IC12	OP amplifier	1/4 : TX power gain control voltage buffer 2/4 : Unused 3/4 : RX IF gain control voltage buffer 4/4 : TX band gain control voltage buffer
IC13	OP amplifier	A/2 : ALC reference voltage buffer B/2 : ALC meter voltage buffer
IC14	DAC	1/8 : TX power control voltage 2/8 : ALC reference voltage 3/8 : Unused 4/8 : Protection voltage 5/8 : TX power gain control voltage 6/8 : Unused 7/8 : TX band gain control voltage 8/8 : RX IF gain control voltage
IC15	DAC	1/8 : HF/50MHz TX BPF control voltage 2/8 : RF unit RX sub BPF control voltage 3/8 : RF unit RX main BPF control voltage 4/8 : RF unit TX UHF BPF control voltage 5/8 : H in non-FM mode 6/8 : Unused 7/8 : Unused 8/8 : NB level control voltage
IC16	Extended I/O	Q0 : L when RX 10.695MHz XF5 is selected Q1 : L when RX 10.695MHz XF6 is selected Q2 : L when RX 10.695MHz through is selected Q3 : L when AT tuning Q4 : L when RX 455kHz CF1 is selected Q5 : L when RX 455kHz CF2 is selected Q6 : L when RX 455kHz CF3 is selected Q7 : Reserved Q8 : Reserved Q9 : Unused Q10 : H when main squelch is open Q11 : H when sub squelch is open

DESCRIPTION OF COMPONENTS

Ref. No.	Use / Function	Operation / Condition
IC17	Extended I/O	Q0 : H when UHF ATT is on Q1 : H when VHF ATT is on Q2 : H when HF/50MHz ATT is on Q3 : L when external RX antenna terminal is selected Q4 : L when HF/50MHz preamplifier is selected Q5 : H when RX 1st IF 75.925MHz is selected Q6 : H during AM TX Q7 : H during TX in PKD and 9600 bps is selected Q8 : H during TX in non-FM mode Q9 : H during RX in non-FM mode Q10 : H when linear amplifier usage is selected in HF or 50MHz band Q11 : H when linear amplifier usage is selected in either band
IC18	OP amplifier	A/2 : 5V voltage source B/2 : Amplifier 455kHz
IC19	OP amplifier	A/2 : VSR voltage amplifier B/2 : VSF voltage amplifier
IC601	DDS	RX 4th local oscillator (467kHz)
IC602	DDS	TX 1st local oscillator (10.595MHz)
IC603	DDS	RX 3rd local oscillator (11.150MHz)
IC604	Inverter	Polarity inversion
IC605	AVR	14S→8V
IC801	CPU	Display microcomputer
D1	Surge absorption	Relay (K1)
D2	Surge absorption	External RX antenna terminal
D3	Surge absorption	Relay (K2)
D4~6	Surge absorption	Internal circuit protection
D7	Switching	RX/TX changeover, on during RX
D8	Switching	On when RF BPF under 1.705MHz is selected
D9	Surge absorption	Internal circuit protection
D10	Switching	On when RF BPF under 1.705MHz is selected
D11	Switching	On when RF BPF over 1.705MHz is selected
D12,13	Switching	On when RF BPF of 1.705~2.5MHz is selected
D14,15	Switching	On when RF BPF of 2.5~4.1MHz is selected
D16,17	Switching	On when RF BPF of 4.1~6.9MHz is selected
D18,19	Switching	On when RF BPF of 6.9~7.5MHz is selected

Ref. No.	Use / Function	Operation / Condition
D20,21	Switching	On when RF BPF of 7.5~10.5MHz is selected
D22,23	Switching	On when RF BPF of 10.5~13.9MHz is selected
D24,25	Switching	On when RF BPF of 13.9~14.5MHz is selected
D26	Switching	RX/TX changeover, on during TX
D27,28	Switching	On when RF BPF of 14.5~21.5MHz is selected
D29,30	Switching	On when RF BPF of 21.5~30MHz is selected
D31,32	Switching	On when RF BOF of 30~49MHz and 54~60MHz is selected
D33,34	Switching	On when RF BPF of 49~54MHz is selected
D35,36	Switching	On when ~60MHz preamplifier is on
D38,39	Switching	On when ~21.5MHz preamplifier is on
D40	Switching	HF/50MHz LO1 TX/RX changeover
D41,42	Switching	RX 1st MCF changeover
D45	Switching	HF/50MHz LO2 changeover
D46	Switching	HF/50MHz and VHF/UHF band RX IF input changeover, 10.695MHz
D47	Switching	1.2GHz RX IF input changeover, 10.695MHz
D48	Reverse current prevention	Main RBK and NB mute signal matching, main side mute when on
D49	Switching	10.695MHz IF filter changeover, on when wide (6kHz) is selected
D50	Switching	10.695MHz IF filter changeover, on when narrow (2.7kHz) is selected
D52	Switching	10.695MHz IF filter changeover, on when through is selected
D53	Switching	10.695MHz IF filter changeover, on when narrow (2.7kHz) is selected
D55	Switching	10.695MHz IF filter changeover, on when wide (6kHz) is selected
D56	Switching	10.695MHz IF filter changeover, on when through is selected
D57	Switching	10.695MHz IF filter changeover, on when wide (6kHz) is selected
D58	Switching	10.695MHz IF filter changeover, on when narrow (2.7kHz) is selected
D60	Switching	10.695MHz IF filter changeover, on when through is selected
D61	Switching	10.695MHz IF filter changeover, on when wide (6kHz) is selected
D62	Switching	10.695MHz IF filter changeover, on when narrow (2.7kHz) is selected

DESCRIPTION OF COMPONENTS

Ref. No.	Use / Function	Operation / Condition
D64	Switching	10.695MHz IF filter changeover, on when through is selected
D65	Reverse current prevention	Matching of main VHF and main UHF changeover signal
D66	Detection	NB switching pulse detection
D67	Switching	455kHz IF filter changeover
D68	Switching	On when FM mode is selected in main band
D69	Switching	455kHz IF filter changeover
D70,71	Switching	455kHz IF filter changeover
D73	Switching	On when non-FM mode is selected in main band
D75	Switching	On during HF/50MHz TX
D76~79	Variable capacitor	Voltage varies (2 stages) according to the TX band
D80	Switching	TX IF output HF/50MHz, VHF/UHF changeover
D81	Switching	TX IF output 1.2GHz changeover
D82	PIN diode	TX IF gain variable according to TX power
D83	Reverse current prevention	Matching of VTXB and UTXB
D84	PIN diode	TX gain setting of each band
D85	Reverse current prevention	
D86	LED	For constant voltage
D87~89	Reverse current prevention	
D90	Switching	TX IF FM mode/non-FM mode changeover, 10.595MHz
D91	Variable capacitor	FM modulation 10.595MHz
D92,93	Reverse current prevention	Creates IF TXB
D94,95	Reverse current prevention	Creates IF RXB
D96	Zener diode	Stabilizes minus power source to –6V
D97	Rectifier	Creates minus voltage
D98	Surge absorption	Relay (K3)
D99	Reverse current prevention	Matching of start signals from PC and mobile panel
D100	Zener diode	Port protection
D101	Poly-switch	Over voltage detection
D102	Zener diode	Reference voltage of constant voltage power source for mobile panel
D103,104	Surge absorption	
D105	LED	Creates reference voltage
D106	Reverse current prevention	External ALC matching
D107	Zener diode	External ALC voltage shift

Ref. No.	Use / Function	Operation / Condition
D108	Zener diode	Voltage shift
D109,110	Reverse current prevention	External ALC matching
D111	Reverse current prevention	
D112	Zener diode	Port protection
D113	Zener diode	Voltage shift, lower power when power voltage drops
D114	Zener diode	Set so the power does not to rise when the power voltage goes up
D115,116	Reverse current prevention	Meter line
D117,118	Reverse current prevention	External standby
D119	Reverse current prevention	UHF forward wave
D120	Reverse current prevention	UHF reflected wave
D121	Reverse current prevention	1.2GHz forward wave
D122	Reverse current prevention	1.2GHz reflected wave
D123	Reverse current prevention	VHF forward wave
D124	Reverse current prevention	VHF reflected wave
D130	PIN diode	RX gain adjustment 455kHz
D700~702	Reverse current prevention	
D703	Variable capacitor	Voltage varies (2 stages) according to the TX band
D704,705	Switching	On when preamplifier is on at 21.5~60MHz
D706	Reverse current prevention	On at 21.5~60MHz
D707	Rectifier	Noise rectification for FM squelch
D708	Reverse current prevention	Leak current prevention
D709	Zener diode	8V→5V
D710	Voltage shift	Temperature compensation
D711	Reverse current prevention	Discharge path (non-FM mode)
D712,713	Cliper	External modulation input
D714	Voltage shift	
D715	Variable capacitor	Voltage varies (2 stages) according to the TX band
D716	Reverse current prevention	

DESCRIPTION OF COMPONENTS

Ref. No.	Use / Function	Operation / Condition
D717	Surge protection	
D719,720	Zener diode	External surge voltage protection
D721	Reverse current prevention	
D801	LED	On in main band TX mode
D802	LED	On when main band BSY
D803	LED	On in sub band TX mode
D804	LED	On when sub band BSY
D805~809	Reverse connection prevention	Key matrix
D810~824	LED	Key illumination
D826~834	LED	Key illumination
D825	LED	On when FUNC switch is selected
D950~952	Reverse current prevention	
D953	LED	On when TNC 9600 bps is selected
D954	LED	TNC TX buffer state display
D955	LED	TNC connection state display
D956	LED	On when MULTI is selected
D957	LED	Lights when the sub is on

TX-RX 2 UNIT (X57-606X-XX)

Ref. No.	Use / Function	Operation / Condition
Q1	Switching	UHF RX ATT control
Q2	Switching	VHF RX ATT control
Q3	Switching	Sub band local oscillator power supply
Q11	Switching	VHF RX power supply
Q13	Switching	UHF power supply
Q14	Amplifier	UHF preamplifier
Q15	Amplifier	VHF preamplifier
Q16	Switching	UHF RX power supply
Q17	Amplifier	UHF TX signal amplification
Q18	Amplifier	VHF TX signal amplification
Q19	Amplifier	UHF RX signal amplification
Q20	Amplifier	VHF TX signal amplification
Q21	Amplifier	UHF main RX signal amplification
Q22,23	Amplifier	VHF sub RX signal amplification
Q24	Amplifier	VHF main RX signal amplification
Q25	Amplifier	VHF sub RX signal amplification
Q26	Amplifier	UHF TX signal amplification
Q30	Amplifier	Main RX local oscillator signal amplification
Q31	Switching	Main RX mixer power supply
Q32	Amplifier	VHF sub RX local oscillator signal amplification
Q33	Amplifier	UHF sub RX local oscillator signal amplification
Q34	Amplifier	VHF/UHF TX local oscillator signal amplification
Q35	Switching	Sub RX AM power supply
Q36	Switching	VHF sub RX IC6 power supply
Q37	Amplifier	Sub RX 1st IF signal amplification
Q38	Amplifier	Main RX 1st IF signal AGC control amplification
Q39	DC amplifier	Sub RX AM AGC control signal DC amplification
Q40,41	Switching	Sub RX FM wide/narrow change-over control
Q42,43	Mixer	Main RX 2nd mixer
Q44	Amplifier	Main RX 2nd mixer local oscillator signal amplification
Q45	Amplifier	Sub RX AM signal amplification
Q46,47	Mixer	TX mixer
Q48	Amplifier	Sub RX AM signal amplification
Q50	Amplifier	TX mixer local oscillator signal amplification
Q51	Amplifier	Sub RX AM signal amplification
Q55	Switching	VHF sub RX power supply
Q56	Switching	UHF sub RX power supply
Q57	Switching	Sub RX IF amplifier gain RBK control
Q58	Switching	VHF main RX preamplifier through
Q59	Switching	UHF main RX preamplifier through
Q60	Switching	VHF/UHF TX wide-band amplifier power supply
Q61	Amplifier	Main RX 2nd IF signal amplification
Q62	Switching	VHF/UHF TX wide-band amplifier power supply
Q63	Amplifier	Sub RX squelch signal noise amplification
Q65	Amplifier	31.2MHz reference signal amplification
Q66,67	Switching	Sub RX band changeover control
Q400~402	Active LPF	Comparison frequency 5kHz
Q403	Switching	HF LO2 VCO changeover
Q404	Switching	Sub VCO1 oscillation frequency changeover
Q405	Switching	Sub VCO2 oscillation frequency changeover
Q406	SUB VCO1	322.950~426.040MHz (K) 371.475~381.475MHz (E)
Q407	SUB VCO2	354.950~465.050MHz (K) 405.050~409.050MHz (E)
Q409	LO2 VCO	58.390~65.230MHz
Q410	Switching	Sub VCO1 changeover
Q411	Switching	Sub VCO2 changeover
Q412	Doubler	15.6MHz x 2 = 31.2MHz
Q413	Amplifier	For sub VCO1 (322.950~426.040MHz (K) 371.475~381.475MHz (E))
Q414	Amplifier	For sub VCO2 (354.950~465.050MHz (K) 405.050~409.050MHz (E))

DESCRIPTION OF COMPONENTS

Ref. No.	Use / Function	Operation / Condition
Q415	Buffer amplifier	For HF LO2 (58.390~65.230MHz)
Q416	Buffer amplifier	PLL input buffer (322.950~465.050MHz (K) 371.475~409.050MHz (E))
Q417	Amplifier	For VHF/UHF LO2 (31.2MHz)
Q418,419	Ripple filter	8V
Q420	Buffer amplifier	15.6MHz
Q421	Amplifier	For HF LO2 output (58.390~65.230MHz)
Q423~425	Buffer amplifier	DDS input buffer (31.2MHz)
Q426	Switching	For Q427
Q427	HF REF VCO	31.130~32.834MHz
Q428	Amplifier	For HF REF VCO (31.130~32.834MHz)
Q429	Buffer amplifier	For VHF DDS (9.014~9.322MHz (K) 9.112~9.210MHz (E))
Q430	Buffer amplifier	For UHF DDS (8.328~8.475MHz (K) 8.344~8.469MHz (E))
Q431	UHF VCO	378.105~418.205MHz (K) 388.105~398.205MHz (E)
Q432	Buffer amplifier	For HF DDS (7.792~8.209MHz)
Q433	VHF VCO	183.795~193.895MHz (K) 185.795~187.895MHz (E)
Q434	Switching	UHF VCO changeover
Q435	Amplifier	For UHF VCO (378.105~418.205MHz (K) 388.105~398.205MHz (E))
Q436	Ripple filter	8V
Q437	Amplifier	For VHF VCO (183.795~193.895MHz (K) 185.795~187.895MHz (E))
Q438	Ripple filter	8V
Q489	Switching	VHF REF VCO changeover
Q441	VHF REF VCO	36.058~37.288MHz
Q444	Amplifier	For VHF REF VCO (36.058~37.288MHz)
Q446	Ripple filter	8V
Q447	Active LPF	Comparison 975~1375kHz
Q448,449	Active LPF	Comparison 520~529kHz
Q450	Active LPF	Comparison 975~1375kHz
Q451	Active LPF	Comparison 520~529kHz
Q452	Active LPF	Comparison 975~1375kHz
Q453	Switching	HF VCO1 changeover
Q454	switching	HF VCO3 changeover
Q455	Ripple filter	8V
Q457	Amplifier	For PLL input (183.795~193.895MHz (K) 185.795~187.895MHz (E))
Q458	Ripple filter	8V
Q459	HFLO1, VCO1	75.855~86.085MHz
Q460	HFLO1, VCO3	112.825~129.085MHz

Ref. No.	Use / Function	Operation / Condition
Q461	Amplifier	For PLL input (378.105~418.205MHz (K) 388.105~398.205MHz (E))
Q462	Amplifier	For HF VCO (75.855~129.085MHz)
Q463	Switching	HF VCO2 changeover
Q464	HFLO1, VCO2	92.825~106.085MHz
Q469~472	Switching	VHF/UHF LO1 output changeover
Q473	Ripple filter	8V
Q474	Switching	VHF/UHF LO1 output changeover
Q476	Amplifier	For HF LO1 output
IC2	Serial/parallel signal conversion	Power, AM FM wide/narrow control
IC3	Wide-band amplifier	VHF/UHF TX amplifier
IC4	Mixer	Main RX 1st mixer
IC5	Mixer	Sub RX 1st mixer
IC6	Divider	Sub VHF local oscillator 1/2 divider
IC7	FM IC	Sub band FM detection
IC8	Multiplexer	Sub band FM/AM audio output changeover
IC9	OP amplifier	Sub band FM demodulated signal amplification
IC400	AVR	10V→8V
IC401	PLL	For HF LO2 VCO
IC402	PLL	For sub VCO
IC403	AVR	8V→5V
IC404	Serial/parelle conversion	VCO changeover signal output
IC405	Wide-band amplifier	For sub LO1 output (322.950~ 465.050MHz (K) 371.475~405.050MHz (E))
IC406	DDS	For VHF REF VCO (9.014~9.322MHz (K) 9.112~9.210MHz (E))
IC407	DDS	For UHF VCO (8.328~8.476MHz (K) 8.344~8.469MHz (E))
IC408	DDS	For HF REF VCO (7.792~8.209MHz)
IC409	PLL	For HF REF VCO
IC410	PLL	For VHF VCO
IC411	PLL	For VHF REF VCO
IC412	PLL	For UHF VCO
IC414	PLL	For HF VCO
IC415	Wide-band amplifier	For VHF/UHF RX LO1 output (183.895~418.105MHz (K) 185.895~398.105MHz (E))
IC416	Wide-band amplifier	For VHF/UHF TX LO1 output (183.795~418.205MHz (K) 185.795~398.205MHz (E))
D6	Switching	On in UHF TX mode
D7	Switching	On in VHF TX mode

DESCRIPTION OF COMPONENTS

Ref. No.	Use / Function	Operation / Condition
D9	Switching	On when UHF RX preamplifier is on
D10	Switching	On when VHF RX preamplifier is on
D11	Switching	On when UHF RX preamplifier is off
D12	Switching	On when UHF RX ATT is on
D13	Switching	On when VHF RX preamplifier is off
D14	Switching	On when VHF RX ATT is on
D15	Switching	On when VHF RX preamplifier is off
D16	Switching	On when VHF RX ATT is off
D17	Switching	On when UHF RX preamplifier is off
D18	Switching	On when UHF RX ATT is off
D19	Switching	On in UHF TX mode
D20	Switching	On when UHF RX preamplifier is on
D21	Switching	On in VHF TX mode
D22	Switching	On when VHF RX preamplifier is on
D23	Switching	On when UHF is selected in the main band
D24	Switching	On when VHF is selected in the main band
D30	Variable capacitor	VHF main RX BPF tuning
D31	Variable capacitor	UHF main RX BPF tuning
D32	Variable capacitor	VHF sub RX BPF tuning
D33	Variable capacitor	UHF TX BPF tuning
D34	Variable capacitor	VHF main RX BPF tuning
D36	Variable capacitor	UHF main RX BPF tuning
D37	Variable capacitor	VHF sub RX BPF tuning
D39	Variable capacitor	VHF main RX BPF tuning
D40	Variable capacitor	VHF sub RX BPF tuning
D41	Variable capacitor	VHF main RX BPF tuning
D42	Variable capacitor	UHF TX BPF tuning
D43	Variable capacitor	UHF main RX BPF tuning
D46	Switching	On in VHF sub RX
D47	Variable capacitor	UHF TX BPF tuning
D48	Switching	On when VHF is selected in the main band
D49	Switching	On when UHF is selected in the main band
D51	Variable capacitor	UHF TX BPF tuning
D52	Switching	VHF/UHF TX BPF selection
D53,56	Switching	VHF/UHF sub local oscillator changeover
D54	Diode mixer	VHF/UHF TX mixer
D57	Switching	Wide/narrow switching
D58	AM detector	AM detection
D59	Switching	Wide/narrow switching
D63~66	Reverse current prevention	Paddle key control line
D68	Reverse current prevention	VHF/UHF TX power supply
D69	Reverse current prevention	UHF main RX power supply
D71	Reverse current prevention	UHF main RX power supply

Ref. No.	Use / Function	Operation / Condition
D73	Reverse current prevention	Produce VURXB by VRXB and URXB
D74	Reverse current prevention	Produce R14 by R20S and R14S
D74	Reverse current prevention	UHF RX power supply
D76	Reverse current prevention	UHF sub RX power supply
D77	Limiter	VHF large input prevention
D78	Limiter	UHF large input prevention
D79,80	Variable capacitor	VHF sub RX BPF tuning
D81	Switching	UHF RX signal line
D82	Switching	RX power supply
D83	Rectifier	Squelch control voltage noise rectification
D84~86	Variable capacitor	VHF main RX BPF tuning
D87	Variable capacitor	VHF sub RX BPF tuning
D88	Variable capacitor	VHF main RX BPF tuning
D89	Constant voltage	AF amplifier power supply
D90,91	Switching	UHF sub RX signal line
D92~94	Switching	UHF RX signal line
D95	Switching	Sub RX signal line
D96	Switching	VHF sub RX signal line
D97	Switching	RX power supply
D100	Variable capacitor	VHF sub RX BPF tuning
D98,99	Reverse current prevention	D95 control line
D101	Switching	VHF sub RX signal line
D400	Reverse current prevention	Unlock signal detection (HF LO2 VCO)
D401	Variable capacitor	Sub VCO1
D402	Variable capacitor	Sub VCO2
D403	Variable capacitor	HF LO2 VCO
D404	Switching	Sub VCO1 oscillation frequency changeover
D405	Switching	Sub VCO2 oscillation frequency changeover
D406	Variable capacitor	HF LO2 VCO
D407	Reverse current prevention	Unlock signal detection (Sub VCO)
D408	Variable capacitor	HF REF VCO
D409,410	Variable capacitor	UHF VCO
D411,412	Variable capacitor	VHF VCO
D413	Variable capacitor	VHF REF VCO
D416	Variable capacitor	HFLO1, VCO1
D417	Variable capacitor	HFLO1, VCO3
D418	Switching	HFLO1, VCO1 output
D419	Switching	HFLO1, VCO2 output
D420	Variable capacitor	HFLO1, VCO2
D421	Switching	HFLO1, VCO2 output
D422	Reverse current prevention	Unlock signal detection (VHF VCO)

DESCRIPTION OF COMPONENTS

Ref. No.	Use / Function	Operation / Condition
D423	Reverse current prevention	Unlock signal detection (UHF VCO)
D426	Switching	On in main VHF RX mode
D427	Switching	On in VHF TX mode
D428	Switching	On in main UHF RX mode
D429	Switching	On in UHF TX mode
D430	Switching	On in main VHF RX mode
D431	Switching	On VHF TX mode
D432	Switching	On in main UHF RX mode
D433	Switching	On in UHF TX mode
D434,441	Switching	On in main VHF RX mode
D435,442	Switching	On in main UHF RX mode
D436,443	Switching	On in VHF TX mode
D437,444	Switching	On in UHF TX mode
D438	Reverse current prevention	Unlock signal detection (HF VCO)
D439,440	Switching	Filter changeover, on when 0.03~16.99MHz
D445~447	Reverse current prevention	HF LO2 is selected when HF band mode

TX-RX 3 UNIT (X57-6070-00)

Ref. No.	Use / Function	Operation / Condition
Q1,2	TX mixer	Input : 10.595MHz, 124.8MHz Output : 135.395MHz
Q3	TX IF amplifier	Amplifies 135.395MHz TX IF signal
Q4	Power switch	Supplies 5V to IC1 during TX
Q5	TX RF amplifier	Amplifies 1240~1300MHz TX RF signal
Q7,8	RX mixer	Input : 135.495MHz, 124.8MHz Output : 10.695MHz
Q9	RX AGC amplifier	
Q10	RX mixer	Input : 1104~1165MHz, 1240~1300MHz Output : 135.495MHz
Q11,12	RX RF amplifier	Amplifies 1240~1300MHz RX RF signal
Q13	Reference signal amplifier	Amplifies IC4 reference signal (31.2MHz)
Q14	Quadruple	Input : 31.2MHz Output : 124.8MHz
Q15	local oscillation signal amplifier	Amplifies local oscillation signal (124.8MHz)
Q16	Amplifier	Amplifies 8.323~8.488MHz signal
Q17	Power filter	Smooths power for VCO and loop filter
Q19	Double	Output : 1104~1165MHz

Ref. No.	Use / Function	Operation / Condition
Q20	High-frequency amplifier	Amplifies 1104~1165MHz local oscillation signal
Q301	VCO	FET for oscillation
Q302	High-frequency amplifier	VCO oscillation buffer amplifier
Q303	RX IF amplifier	Amplifies the 10.695MHz IF signal
Q304	TX IF amplifier	Amplifies the 10.595MHz IF signal
Q305~307	LPF	PLL loop LPF
Q310,311	Amplifier	Amplifies 31.2MHz signal
Q312	PLL reference signal amplifier	Amplifies PLL reference signal
Q313,314	Mixer for PLL reference signal	Input : 31.2MHz, 8.323~8.488MHz Output : 39.523~39.688MHz
Q315	Switch	RX signal mute
IC1	TX RF amplifier	
IC2	Drive power module	Amplifies to approximately 1W
IC3	Final power module	Amplifies to approximately 10W
IC4	DDS	Produces an approximately 8.4MHz signal from the 31.2MHz reference signal
IC5	PLL	VCO input : 552.253~582.303MHz Reference input : 39.523~39.688MHz
D1	TX mixer	Converts 135.395MHz signal to 1240~1300MHz
D2	Q5 base voltage stabilization	A voltage more than that stipulated for Q5 base is not to be applied
D3	Forward wave detection	
D4	Reflected wave detection	
D5~7	TX/RX changeover	On when TX
D8	Local signal changeover	Supplies a 124.8MHz signal to Q1 and Q2 during TX and to Q7 and Q8 during RX
D9	AGC starting control	Speeds the AGC start
D10	Local signal changeover	Goes ON during TX and supplies a 1104~1165MHz signal to D1
D11	Local signal changeover	Goes ON during RX and supplies a 1104~1165 MHz signal to Q10
D12	Power supply	Supply the power to the local oscillator unit from 12RXB and 12TXB
D301	VCO	Variable capacitance diode for VCO oscillation
D302	Zener diode	A voltage more than that stipulated for Q12 is not to be applied
D303	TX/RX changeover	On when TX
D304	Switch	PLL unlock detection
D305	VCO	Variable capacitance diode for VCO oscillation

downloaded by
www.radioamatore.info

SEMICONDUCTOR DATA

Main CPU : 64F2633xxxx (Control unit IC8)

■ Pin function

No.	Name	I/O	Function
1	MD1	I	Operation mode setting pin 1. Connect to Vcc.
2	MD2	I	Operation mode setting pin 2. Connect to Vcc.
3,4	NC	–	
5~8	HA0~HA3	O	Address bus.
9	Vss	–	GND.
10	HA4	O	Address bus.
11	Vcc	I	3.3V.
12~14	HA5~HA7	O	Address bus.
15	Vss	–	GND.
16	ADC1	O	Analog switch control signal.
17	PVcc	I	5V.
18	ADC2	O	Analog switch control signal.
19	PSC	O	Power relay control.
20	DASH	I	Electronic key dash signal.
21	DOT	I	Electronic key dot signal.
22	STSC	O	RS-232 IC start instruction.
23	CKY	O	Transmission power output specification.
24	CTS2	I	UART operation instruction input from personal computer control.
25	RTS2	O	UART operation instruction output to personal computer control.
26	TXD2	O	Data output to PC/IF.
27	RXD2	I	Data input from PC/IF.
28	RES	O	Peripheral equipment reset input.
29	Vss	–	GND.
30	BEEP	O	Beep pattern output to DSP.
31	PCK	O	PLL unit common clock output.
32	PDA	O	PLL unit common data output.
33	DATA	O	Common data output.
34	PSW	I	Power switch interrupt.
35,36	NC	–	
37	CLOCK	O	Common clock output.
38	MRBK	O	Main RBK output.
39	SRBK	O	Sub RBK output.
40	MABK	O	Main ABK output.
41	SABK	O	Sub ABK output.

No.	Name	I/O	Function
42	DRES	O	DSP reset output.
43	ULK	I	Main/sub common unlock signal.
44	12ULK	I	1.2GHz band unlock signal.
45	DREN	O	DRU-3 enable.
46	ESCK	O	EEPROM clock output.
47	ESI	O	EEPROM data output.
48	Vss	–	GND.
49	HD0	O	Data bus.
50	PVcc	I	5V.
51~57	HD1~HD7	O	Data bus.
58	TXD0	O	Data output to main unit panel.
59	RXD0	I	Data input from main unit panel.
60	PVcc	I	5V. Power supply pin for pin 52~61.
61	START	I	Interrupt for returning from sleep mode. (PC/mobile head)
62	Vss	–	GND.
63	TXD1	O	Data output to mobile head.
64	RXD1	I	Data input from mobile head.
65	BOVR	I	Over voltage detection interrupt.
66	TTO	O	AT-300 control signal.
67,68	NC	–	
69	TSO	O	AT-300 control signal.
70	TTI	I	AT-300 control signal.
71	AMD	I	Amplitude comparison detection inst-ruction input.
72	CSD2	O	DSP control chip select 2
73	CSD1	O	DSP control chip select 1.
74	TSI	I	AT-300 control signal.
75	NC	O	
76	PLLVcc	I	Internal PLL oscillator power 3.3V.
77	PLLCAP	I	
78	PLLVss	–	Internal PLL oscillator GND.
79	RESET	I	Hard reset input.
80	NMI	I	Normally H.
81	STBY	I	Hardware standby pin. Normally : H
82	FWE	I	Flash light enable. Normally : L, During writing : H
83	XTAL	I	Crystal oscillator 11.0592MHz.

SEMICONDUCTOR DATA

No.	Name	I/O	Function
84	Vcc	I	3.3V.
85	EXTAL	I	Crystal oscillator 11.0592MHz.
86	Vss	–	GND.
87,88	NC	I	
89	PVcc	I	3.3V.
90	PHD	I	Phase comparison detection instruction input.
91	Vss	–	GND.
92	NC	O	
93	HRD	O	External address space lead pin. Normally : H
94	HWR	O	External space write strobe (D15~D8).
95	BACKUP	I	Voltage reduction interrupt.
96	WAIT	I	Bus cycle wait state request.
97	FEN2	O	Final serial-parallel enable 2 (AT).
98	FEN1	O	Final serial-parallel enable 1 (LPF).
99,100	NC	–	
101	Avcc	I	5V.
102	VREF	I	5V.
103	MSM	I	Main SM voltage input.
104	SSM	I	Sub SM voltage input.
105	AXC	I	SW (VSF/MALT).
106	AYC	I	SW (VSR/SALT).
107	AZC	I	SW (MSQ/SMQ).

No.	Name	I/O	Function
108	BXC	I	SW (MPU/MDN/ALC/Reserve).
109	BYC	I	SW (THHF/THU/TH12/TEST).
110	PCHECK	I	Panel CPU connection check input signal.
111	DTDT	I	DTMF decoder data input.
112	NAR	I	VS-3 serial data input permission judgment.
113	EOM	I	DRU-3 message end judgment.
114	KYS	I	Key jack connection judgment.
115	CTS0	I	UART operation instruction input from main unit panel.
116	KEY	I	Key down instruction.
117	PKSA	I	Packet transmission instruction input.
118	SS	I	PTT transmission instruction input.
119	AVss	–	GND.
120	LICS	O	Input latch control chip select.
121	LOCS	O	Output latch control chip select.
122	DTSTD	I	DTMF decoder analysis end signal.
123	EDA	I	EEPROM data input.
124	EEN	O	EEPROM enable.
125	RST0	O	UART operation instruction output to main unit panel.
126	RXD3	I	Data input from TNC.
127	TXD3	O	Data output to TNC.
128	MD0	I	Operation mode setting pin 0. Connect to Vss.

SEMICONDUCTOR DATA

Panel CPU : 30624FGAGxxxxx (TX-RX 1 unit IC801)

■ Pin function

No.	Name	I/O	Function
1,2	KEY	O	Key illumination LED control signal.
3	–	–	Pull up to Vcc.
4	LSUB	O	Sub LED control signal.
5	MULTI	O	Multi LED control signal.
6	–	–	Vss connection.
7	–	–	Pull down to Vss.
8,9	–	–	Pull up to Vcc.
10	RES	I	Reset.
11	XOUT	O	System clock.
12	Vss	–	Vss.
13	XIN	I	System clock.
14	Vcc	–	Vcc.
15	–	–	Pull up to Vcc.
16	MUL1	I	Multi/CH encoder interrupt port.
17	LOW1	I	Low encoder interrupt port.
18	HI1	I	High encoder interrupt port.
19	MAA	I	Main encoder A.
20	MAB	I	Main encoder B.
21	RITA	I	RIT encoder A.
22	RITB	I	RIT encoder B.
23	MUL2	I	Multi/CH encoder data input.
24	LOW2	I	Low encoder data input.
25	HI2	I	High encoder data input.
26~28	–	–	Pull up to Vcc.
29	CON	O	CON LED control signal.
30	STA	O	STA LED control signal.
31	9.6K	O	9.6K KED control signal.
32	–	–	Pull down to Vss.
33	TXD0	O	UART data transmission port to main CPU.
34	RXD0	I	UART data reception port from main CPU.
35	RTS0	O	RTS output to main CPU.
36	CTS0	I	RTS input from main CPU.
37~40	–	–	Pull down to Vss.
41~44	–	–	Pull up to Vcc.
45	DIM	O	LED dimmer control signal.
46	SRX	O	Sub RX LED control signal.

No.	Name	I/O	Function
47	STX	O	Sub TX LED control signal.
48	MRX	O	Main RX LED control signal.
49	MTX	O	Main TX LED control signal.
50	FUNC	O	FUNC LED control signal.
51	LINH	O	LCD segment display off control output.
52	LMO	O	LCD driver control output.
53	LCK	O	Common clock output.
54	LDA	O	Common data output.
55	LCS1	O	LDC (segment) driver 1 chip select output.
56	LCS2	O	LCD (segment) driver 2 chip select output.
57	LCS3	O	LCD (dot) driver chip select output.
58	LCS4	O	Serial-parallel IC chip select output.
59	LCS5	O	Reserve.
60	Vcc	–	Vcc.
61	LRES	–	LCD driver reset control signal.
62	Vss	–	Vss.
63~65	–	–	Pull up to Vcc.
66~70	S0~S4	O	Key scan output bit 0~4
71	PBKC	I	Backup processing start signal.
72	KC	I	Key input C.
73	KB	I	Key input B.
74	KA	I	Key input A.
75,76	–	–	Pull up to Vcc.
77~86	K9~K0	I	Key input 9~0.
87	SUBS	I	Sub on/off changover.
88	MAF	I	Main AF.
89	MSQL	I	Main SQL.
90	CWBC	I	CW BC.
91	MRF	I	Main RF.
92	SAF	I	Sub AF.
93	SSQL	I	Sub SQL.
94	AVss	–	Vss connection.
95	–	–	Pull up to Vcc.
96	VREF	–	ADC reference voltage. Vcc connection.
97	AVcc	–	ADC circuit power. Vcc connection.
98~100	–	–	Pull up to Vcc.

SEMICONDUCTOR DATA

Extended I/O Port

■ Final unit (X45-360)

Pin No.	Port name	Pin name	Function	Active level	Condition
IC205 : BU2099FV, Enable : FEN1					
6	Q0	FAN1	Low & High speed FAN1	H	K
7	Q1	FAN2	High speed FAN2	H	K
8	Q2	ANT2	HF ANT2 switching relay	L	(H : ANT1) : K
9	Q3	ATS	In/Through switching relay	L	(H : Through) : K
10	Q4	50RL	50M LPF relay	L	30.0 ≤ f ≤ 60.0 (MHz)
11	Q5	28RL	24/28M LPF relay	L	21.50 ≤ f < 30.0 (MHz)
12	Q6	21RL	18/21M LPF relay	L	14.50 ≤ f < 21.50 (MHz)
13	Q7	14RL	(10/) 14M LPF relay	L	7.50 ≤ f < 14.50 (MHz) : K 10.50 ≤ f < 14.50 (MHz) : E
14	Q8	10RL	(5 or 10M) LPF relay	L	4.70 ≤ f < 5.50 (MHz) : K 7.50 ≤ f < 10.50 (MHz) : E
15	Q9	7RL	7M LPF relay	L	5.50 ≤ f < 7.50 (MHz) : K 4.70 ≤ f < 7.50 (MHz) : E
16	Q10	4RL	3.5M LPF relay	L	2.50 ≤ f < 4.70 (MHz)
17	Q11	2RL	1.8M LPF relay	L	f < 2.50 (MHz)
IC803 : UPD6345GS, Enable : FEN2					
12	Q1	L (1)	50M coil	L	30.0 ≤ f ≤ 60.0 (MHz)
11	Q2	L (2)	28M coil	L	25.50 ≤ f < 30.0 (MHz)
10	Q3	L (3)	24.9M coil	L	21.50 ≤ f < 25.50 (MHz)
9	Q4	L (4)	21M coil	L	14.50 ≤ f < 21.50 (MHz)
8	Q5	L (5)	14M coil	L	10.50 ≤ f < 14.50 (MHz)
7	Q6	L (6)	10M coil	L	7.50 ≤ f < 10.50 (MHz)
6	Q7	L (7)	7M coil	L	4.70 ≤ f < 7.50 (MHz)
5	Q8	L (8)	3.5M coil	L	2.50 ≤ f < 4.70 (MHz)
IC801 : UPD6345GS					
12	Q1	CI (1)	2.5p capacitor switching	L	Phase error correction C1 On : Active, Off : Inactive
11	Q2	CI (2)	5p capacitor switching	L	Phase error correction C2 On : Active, Off : Inactive
10	Q3	CI (3)	10p capacitor switching	L	Phase error correction C3 On : Active, Off : Inactive
9	Q4	CI (4)	18p capacitor switching	L	Phase error correction C4 On : Active, Off : Inactive
8	Q5	CI (5)	39p capacitor switching	L	Phase error correction C5 On : Active, Off : Inactive
7	Q6	CI (6)	75p capacitor switching	L	Phase error correction C6 On : Active, Off : Inactive
6	Q7	CI (7)	150p capacitor switching	L	Phase error correction C7 On : Active, Off : Inactive
5	Q8	CI (8)	300p capacitor switching	L	Phase error correction C8 On : Active, Off : Inactive
IC802 : UPD6345GS					
12	Q1	CO (1)	2.5p capacitor switching	L	Amplitude error correction C1 On : Active, Off : Inactive
11	Q2	CO (2)	5p capacitor switching	L	Amplitude error correction C2 On : Active, Off : Inactive
10	Q3	CO (3)	10p capacitor switching	L	Amplitude error correction C3 On : Active, Off : Inactive
9	Q4	CO (4)	18p capacitor switching	L	Amplitude error correction C4 On : Active, Off : Inactive
8	Q5	CO (5)	39p capacitor switching	L	Amplitude error correction C5 On : Active, Off : Inactive
7	Q6	CO (6)	75p capacitor switching	L	Amplitude error correction C6 On : Active, Off : Inactive
6	Q7	CO (7)	150p capacitor switching	L	Amplitude error correction C7 On : Active, Off : Inactive
5	Q8	CO (8)	300p capacitor switching	L	Amplitude error correction C8 On : Active, Off : Inactive

SEMICONDUCTOR DATA

■ Control unit (X53-391)

Pin No.	Port name	Pin name	I/O	Function
IC25 : TC74VHC573FT				
19	Q0	PENA	O	PLL serial-parallel enable A
18	Q1	PEN1	O	PLL enable 1
17	Q2	PEN2	O	PLL enable 2
16	Q3	PEN3	O	PLL enable 3
15	Q4	PEN4	O	PLL enable 4
14	Q5	PEN5	O	PLL enable 5
13	Q6	PEN6	O	PLL enable 6
12	Q7	DSPW	O	DSP control signal
IC24 : TC74VHC573FT				
19	Q0	DEN1	O	DDS enable 1
18	Q1	DEN2	O	DDS enable 2
17	Q2	DEN3	O	DDS enable 3
16	Q3	DEN4	O	DDS enable 4
15	Q4	DEN5	O	DDS enable 5
14	Q5	DEN6	O	DDS enable 6
13	Q6	12EN1	O	1.2G enable 1
12	Q7	12EN2	O	1.2G enable 2
IC22 : TC74VHC573FT				
19	Q0	IEN1	O	IF serial-parallel enable 1
18	Q1	IEN2	O	IF serial-parallel enable 2
17	Q2	IEN3	O	IF serial-parallel enable 3
16	Q3	IEN4	O	IF DAC enable 5
15	Q4	EIN5	O	IF DAC enable 6
14	Q5	DTCLK	O	DTMF clock
13	Q6	REN1	O	RF serial-parallel enable 1
12	Q7	VCS	O	VS-3 chip select
IC21 : TC74VHC573FT				
19	Q0	SRXC	O	DSP control signal
18	Q1	DSPEN1	O	DSP control signal
17	Q2	DSPEN2	O	DSP CODEC enable
16	Q3	AMU	O	AF mute signal
15	Q4	12EN3	O	1.2G enable 3
14	Q5	SQC	O	For TNC
13	Q6	ISTBY	O	STBY for TNC
12	Q7	RTS3	O	For tNC
IC23 : TC74VHC573FT				
19	Q0	HFTXC	O	HF TX power start instruction
18	Q1	HFRXC	O	HF RX power start instruction
17	Q2	VTXC	O	VHF TX power start instruction
16	Q3	VRXC	O	VHF RX power start instruction
15	Q4	UTXC	O	UHF TX power start instruction
14	Q5	URXC	O	UHF RX power start instruction
13	Q6	12TXC	O	1.2G TX power start instruction
12	Q7	12RXC	O	1.2G RX power start instruction
IC20 : TC74VHC573FT				
2	D0	SPS	I	SP2 connection detection
3	D1	PKSI	I	PKS for TNC
4	D2	S9600	I	For TNC
5	D3	PMUTE	I	Mute instruction from modem IC
6	D4	12OP	I	1.2G unit connection detection
7	D5	CTS3	I	For TNC
8	D6	STA	I	STA instruction from modem IC
9	D7	CON	I	CON instruction from modem IC
IC19 : TC74VHC573FT				
2	D0	SIM0	I	Type setting 0
3	D1	SIM1	I	Type setting 1
4	D2	SIM2	I	Type setting 2
5	D3	SIM3	I	Type setting 3
6	D4	SIM4	I	Type setting 4
7	D5	SIM5	I	Type setting 5
8	D6	SIM6	I	Type setting 6
9	D7	SIM7	I	Type setting 7

IC530 : BU2099FV, Enable : DSPEN2

Pin No.	Port name	Pin name	Function	Active level	Condition
6	Q0	MIC	TX input (Microphone selection)	H	TX from microphone
7	Q1	ACC12	TX input (ACC 1200 bps)	H	TX 1200 bps from ACC (PKD)
8	Q2	TNC12	TX input (TNC 1200 bps)	H	TX 1200 bps from built-in TNC
9	Q3	DRU	TX input (DRU selection)	H	TX from DRU
10	Q4	RX12	RX ACC outut (1200 bps)	H	ACC uses menu 1200 bps
11	Q5	M.REM	Remote input (Main)	H	External trasceiver remote function (Reserved)
12	Q6	S.REM	Remote input (Sub)	H	When the external transceiver remote function is on
13	Q7	M.TNC	RX TNC selection (Main)	H	TNC band (Main)
14	Q8	S.TNC	RX TNC selection (Sub)	H	TNC band (Sub)
15	Q9	MIC.REM	Remote input (Microphone)	H	When the microphone remote function is on
16	Q10	TNC96	TX input (TNC 9600 bps)	H	9600 bps TX data from built-in TNC.
17	Q11	NOT96	TX data speed (Other than 9600 bps)	H	Other than 9600 bps is selected to transmit

SEMICONDUCTOR DATA

■ TX-RX 1 unit (X57-605)

Pin No.	Port name	Pin name	Function	Active level	Condition
IC5 : BU2099FV, Enable : IEN1					
6	Q0	BPF12	BPF selection	L	49.0MHz ≤ f < 54.0MHz
7	Q1	BPF11	BPF selection	L	30MHz ≤ f < 49MHz, 54MHz ≤ f ≤ 60MHz
8	Q2	BPF10	BPF selection	L	21.5MHz ≤ f < 30.0MHz
9	Q3	BPF9	BPF selection	L	14.5MHz ≤ f < 21.5MHz
10	Q4	BPF8	BPF selection	L	13.9MHz ≤ f < 14.5MHz
11	Q5	BPF7	BPF selection	L	10.5MHz ≤ f < 13.9MHz
12	Q6	BPF6	BPF selection	L	7.50MHz ≤ f < 10.5MHz
13	Q7	BPF5	BPF selection	L	6.90MHz ≤ f < 7.50MHz
14	Q8	BPF4	BPF selection	L	4.10MHz ≤ f < 6.90MHz
15	Q9	BPF3	BPF selection	L	2.50MHz ≤ f < 4.10MHz
16	Q10	BPF2	BPF selection	L	1.705MHz ≤ f < 2.50MHz
17	Q11	BPF1	BPF selection	L	f ≤ 1.705MHz
IC16 : BU2099FV, Enable : IEN2					
6	Q0	FIL1	10.695M filter 12k	L	10.695M filter 12k
7	Q1	FIL2	10.695M filter 2.7k	L	10.695M filter 2.7k
8	Q2	FIL3	10.695M filter through	L	10.695M filter through
9	Q3	TCS	AT tune switch	L	Auto tune
10	Q4	455FIL1	455k filter 15k	L	455k filter 15k
11	Q5	455FIL2	455k filter 9k	L	455k filter 9k
12	Q6	455FIL3	455k filter 2.7k	L	455k filter 2.7k
13	Q7	HFRGC	HF RX gain adjustment	H	21.5MHz ≤ f < 30.0MHz & Pre-amplifier : On
14	Q8	50RGC	50M RX gain adjustment	H	30.0MHz ≤ f ≤ 60MHz & Pre-amplifier : On
15	Q9	NC			
16	Q10	MSQS	Main SQL	H/L	BUSY : H, Not BUSY : L
17	Q11	SSQS	Sub SQL	H/L	BUSY : H, Not BUSY : L
IC17 : BU2099FV, Enable : IEN3					
6	Q0	UATT	UHF ATT switch	H	UHF & ATT on
7	Q1	VATT	VHF ATT switch	H	VHF & ATT on
8	Q2	ATT	HF ATT switch	H	HF & ATT on, or V/U/1.2G
9	Q3	RXANT	RX ANT switch	L	f ≤ 30.0MHz & EXT. RX. ANT. on
10	Q4	PREAMP	Pre-amplifier on/off	H	HF & Pre-amplifier on
11	Q5	MCFSW	MCF switch	H/L	75M : H, 69M : L
12	Q6	AMC	AM switch	H	50ms after AM TX is initiated
13	Q7	PKDSW	PKD TX switch	H	When 9600 bps data is transmitted from ACC (PKD)
14	Q8	NFMT*	Not FM TX	H	When the transmission mode is other than FM
15	Q9	NFMR*	Not FM RX	H	When the reception mode is other than FM
16	Q10	RLSW	TX-B output switch	H	f ≤ 30.0MHz or 50MHz Linear ON
17	Q11	LINEAR	Linear switch	H	Linear ON

NFMT*

	TX	RX
FM	L	L
AM, CW	H	L
SSB, FSK	H	L

NFMR*

	TX	RX
FM	L	L
AM, CW	L	H
SSB, FSK	L	H

SEMICONDUCTOR DATA

■ **TX-RX 2 unit (X57-606)**

Pin No.	Port name	Pin name	Function	Active level	Condition
IC2 : BU2099FV					
6	Q0	AMSW	AM power switch	L	When the sub AM is selected for receiving
7	Q1	W/NSW	Wide/Narrow selection switch	L	When the sub FM narrow is selected for receiving
8	Q2	R43S	Front end selection switch for sub UHF	L	When the sub UHF is selected for receiving
9	Q3	R14S	SUB VHF power switch	L	When the sub VHF is selected for receiving
10	Q4	8RS1	SLO1 amplifier switch	L	When the sub VHF is selected for receiving
11	Q5	8RS1/2	SLO1 prescaler (1/2) switch	L	When the sub UHF is selected for receiving
12	Q6	UPRE	UHF pre-amplifier switch	L	When the UHF receiver and pre-amplifier is off
13	Q7	VPRE	VHF pre-amplifier switch	L	When the VHF receiver and pre-amplifier is off
14	Q8	IMS	VHF pre-amplifier through switch	L	
15	Q9	R50S	Front end selection switch for sub UHF	L	When the sub UHF is selected for receiving
16	Q10	NC			
17	Q11	R20S	Front end selection switch for sub VHF	L	When the sub VHF is selected for receiving
IC404 : BU4094BCFV					
4	Q1	HF VCO1	VCO1 selection for HF band	H	When the frequency range of 0.03~17.0MHz is selected
5	Q2	HF VCO2	VCO2 selection for HF band	H	When the frequency range of 17.0~37.0MHz is selected
6	Q3	HF VCO3	VCO3 selection for HF band	H	When the frequency range of 37.0~60.0MHz is selected
7	Q4	USW	VCO selection for VHF band	H	When the main band VHF is selected
14	Q5	VSW	VCO selection for UHF band	H	When the main band UHF is selected
13	Q6	BSW2	VCO selection for sub VHF band	H	When the sub band RX VHF is selected
12	Q7	BSW1	VCO selection for sub UHF band	H	When the sub band RX UHF is selected
11	Q8	VPRE	VCO oscillator range selection for sub band	H/L	When the sub band is selected for receiving

Conversion Between 5V and 3V :

TC74LVX4245FS (Control unit IC9~11)

■ **Block diagram**

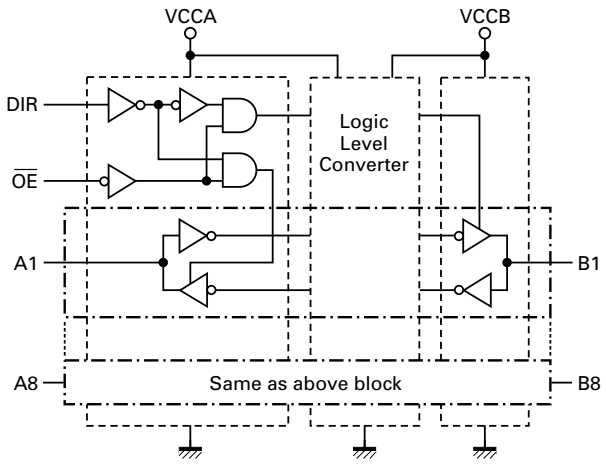

■ **Logic symbol**

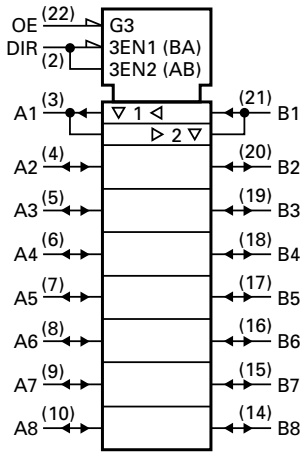

SEMICONDUCTOR DATA

Serial-Parallel : BU2099FV (Final unit IC205, Control unit IC530, Display unit IC4, TX-RX 1 unit IC5,16,17, TX-RX 2 unit IC2)

■ **Block diagram**

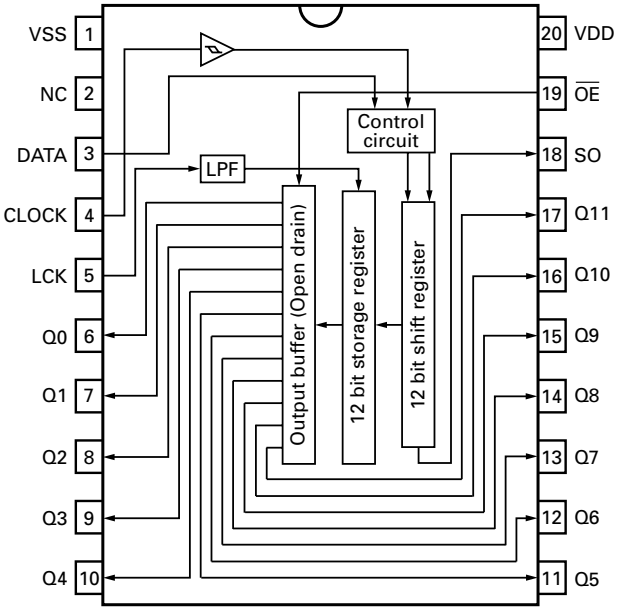

■ **Pin description**

No.	Name	I/O	Description
1	Vss	–	GND
2	NC	–	NC
3	DATA	I	Serial data input.
4	CLOCK	I	Shift register shift clock (rising edge trigger).
5	LCK	I	Storage register latch clock (rising edge trigger).
6~17	Q0~Q11 (Qx)	O	Paralle data output (Nch open drain FET).
18	SO	O	Serial data output.
19	$\overline{OE}$	I	Output enable control input.
20	VDD	–	Power

Latch data	L	H
Output FET	On	Off

D flip-flop : TC7WH74FU (Filter unit IC2)

■ **Logic diagram**

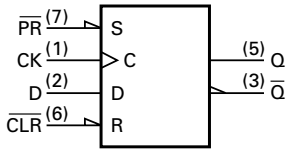

■ **Truth table**

Input				Output		Function
$\overline{CLR}$	$\overline{PR}$	D	CK	Q	$\overline{Q}$	
L	H	X	X	L	H	Clear
H	L	X	X	H	L	Preset
L	L	X	X	H	H	–
H	H	L	↑	L	H	–
H	H	H	↑	H	L	–
H	H	X	↓	Qn	$\overline{Q}$n	No change

X : Don't care

Analog Switch : TC74HC4052AFT (Control unit IC6)

Analog Switch : TC74HC4053AFT (Control unit IC5)

Mixer : TC74HC4053AFT (TX-RX 1 unit IC3)

■ **Logic diagram**

TC74HC4052AFT

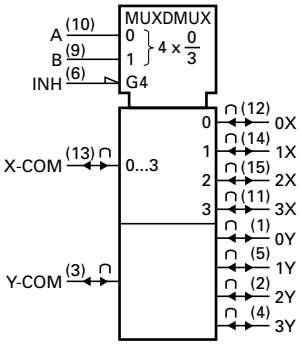

TC74HC4053AFT

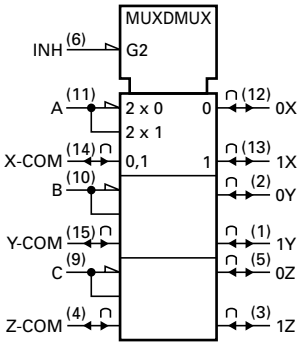

■ **Truth table**

Control inputs				"ON" channel	
Inhibit	C*	B	A	HC4052A	HC4053A
L	L	L	L	0X, 0Y	0X, 0Y, 0Z
L	L	L	H	1X, 1Y	1X, 0Y, 0Z
L	L	H	L	2X, 2Y	0X, 1Y, 0Z
L	L	H	H	3X, 3Y	1X, 1Y, 0Z
L	H	L	L	– –	0X, 0Y, 1Z
L	H	L	H	– –	1X, 0Y, 1Z
L	H	H	L	– –	0X, 1Y, 1Z
L	H	H	H	– –	1X, 1Y, 1Z
H	X	X	X	None	None

X : Don't care, * : Except HC4052A

SEMICONDUCTOR DATA

Flash ROM for DSP : 29LV800B (Control unit IC504,508)

■ Block diagram

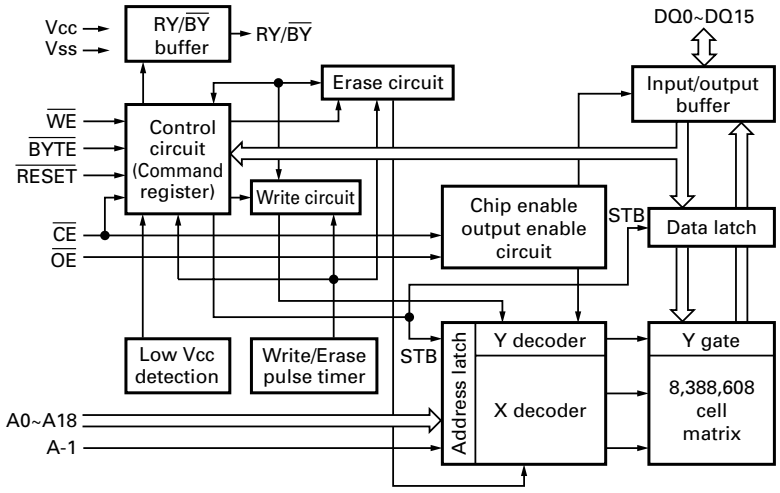

■ Pin description

No.	Name	Description
1~3	A13~A15	Address Input.
4~8	A12~A8	Address input.
9	NC	No connection.
10	$\overline{WE}$	Write enable.
11	$\overline{RESET}$	Hardware reset.
12	Vcc	Power (2.7~3.6V).
13	DQ4	Data input/output.
14	DQ12	Data input/output.
15	DQ5	Data input/output.
16	DQ13	Data input/output.
17	DQ6	Data input/output.
18	DQ14	Data input/output.
19	DQ7	Data input/output.
20	A16	Address input.
21	$\overline{BYTE}$	8 bit/16 bit mode changeover.
22	Vss	Ground.
23	DQ15/A–1	Data input/output/Address input.

No.	Name	Description
24	$\overline{OE}$	Output enable.
25	Vss	Ground.
26	$\overline{CE}$	Chip enable.
27	A0	Address input.
28	DQ0	Data input/output.
29	DQ8	Data input/output.
30	DQ1	Data input/output.
31	DQ9	Data input/output.
32	DQ2	Data input/output.
33	DQ10	Data input/output.
34	DQ3	Data input/output.
35	DQ11	Data input/output.
36	NC	No connection.
37	RY/$\overline{BY}$	Ready/Busy output.
38,39	A18,A17	Address input.
40~43	A7~A4	Address input.
44~46	A1~A3	Address input.

SEMICONDUCTOR DATA

DSP : 320VC5402PGE (Control unit IC515,516)

■ Pin description

Pin name	Type*	Description
		Data signal
A19~A0	O/Z	Parallel address bus A19 (MSB) to A0 (LSB). The low-order 16 bits (A0 to A15) of the address pin are multiplexed to address to external memory (data, program) or I/O. The high-order 4 bits (A16 to A19) are used to address to external program space. These pins are high impedance when in hold mode or when $\overline{OFF}$ is low.
D15~D0	I/O/Z	Parallel data bus D15 (MSB) to D0 (LSB). D15 to D0 are multiplexed to transfer data between the core CPU and external data/program memory or I/O device. The data bus becomes high impedance when data is not output or RS or $\overline{HOLD}$ is low. It also becomes high impedance when $\overline{OFF}$ is low. The data bus has a bus holder to reduce power consumption of unused pins. When there is a bus holder, external bias resistors for unused pins are not necessary. When '5402 does not drive the data bus, the bus holder retains the preceding logic level pin. The '5402 data bus holder is disabled on reset, and enabled/disabled through the BH bit of the bank switching control register (BSCR).
		Initialization, interrupt and reset operation
$\overline{IACK}$	O/Z	Interrupt signal. Interrupt reception and interrupt vector specified by A15 to A0 are fetched by the program counter. It becomes high impedance when $\overline{OFF}$ is low.
$\overline{INT0}$~ $\overline{INT3}$	I	External user interrupt input. $\overline{INT0}$ to $\overline{INT3}$ have priorities and can be masked by interrupt mask resister (IMR) and interrupt mode bit. Polling and reset can be performed by the interrupt flag register (IFR).
$\overline{NMI}$	I	Interrupt signal that cannot be masked. This external interrupt cannot be masked by INTM or IMR. When $\overline{NMI}$ is low, the vector is trapped.
$\overline{RS}$	I	Reset. $\overline{RS}$ stops DSP operation and initializes the CPU and peripheral. When $\overline{RS}$ goes high, execution starts from 0FF80h address of the program memory. $\overline{RS}$ affects various registers and status bits.
MP/$\overline{MC}$	I	Microprocessor/microcomputer mode selection. If it is low on reset, the microcomputer mode is selected, and the internal program ROM is mapped to the high-order 4K words of the program memory space. If it is high on reset, the microprocessor mode is selected and the onchip ROM is erased from the program space. This pin is sampled only on reset, and when the MP/$\overline{MC}$ bit of the processor mode status (PMST) register is reset, the selected mode is made invalid.
		Multi-processing signal
$\overline{BIO}$	I	Branch control. When $\overline{BIO}$ is active, a conditional branch can be executed. When it is low, the processor executes a conditional branch. The XC instruction samples $\overline{BIO}$ condition in the pipeline decode phase. Other instructions sample $\overline{BIO}$ in the read phase.
XF	O/Z	External flag output (latch signal that can be changed by software). It is set to high by SSBX XF instruction, and set to low by loading an RSBX XF instruction or ST1. This signal is used as a communication or general output signal when several DSPs are used. It becomes high impedance when $\overline{OFF}$ signal is at low level, and is set to high level on reset.
		Memory control signal
$\overline{DS}$ $\overline{PS}$ $\overline{IS}$	O/Z	Data, program, or I/O space select signal. It is always at high level, except when it is driven at low level to access a specific external memory space. It is active while the address is effective. In hold mode, it becomes high impedance when the $\overline{OFF}$ signal is at low level.
$\overline{MSTRB}$	O/Z	Memory strobe signal. It is always at high level, except when accessing data or program memory through an external bus. In hold mode, it becomes high impedance when the $\overline{OFF}$ signal is at low level.
READY	I	Data ready signal. It indicates that an external device has finished preparing accessing a bus. If it is not ready (READY is at low level), it waits one cycle and checks the READY signal again. At least two software wait states must be programmed for the processor to detect a READY signal. The READY signal is not sampled until software wait states are complete.
R/$\overline{W}$	O/Z	Read/write signal. It indicates the direction of data transfer with an external device. It is normally at high level (read mode) except when it goes low to execute a write operation. In hold mode, it becomes high impedance when the $\overline{OFF}$ signal is at low level.

SEMICONDUCTOR DATA

Pin name	Type*	Description
$\overline{\text{IOSTRB}}$	O/Z	I/O strobe signal. It is always at high level (read mode) except when accessing an I/O device through an external bus. In hold mode, it becomes high impedance when the $\overline{\text{OFF}}$ signal is at low level.
$\overline{\text{HOLD}}$	I	Hold input signal. Address, data, or control signal control input signal. When this signal is accepted, the address, data, or control signal becomes high impedance.
$\overline{\text{HOLDA}}$	O/Z	Hold response signal. It notifies the external circuits that the processor is in hold state and the address, data and control signals are high impedance so that they can be used by the external circuits. It becomes high impedance when the $\overline{\text{OFF}}$ signal is at low level.
$\overline{\text{MSC}}$	O/Z	Microstate completion signal. $\overline{\text{MSC}}$ indicates that all software wait states are complete. When several software wait states are enabled, $\overline{\text{MSC}}$ becomes active at the beginning of the first software wait state and becomes inactive high at the beginning of the last software wait state. When READY input is connected, $\overline{\text{MSC}}$ inserts an external wait state forcibly after completion of the last internal wait state. It becomes high impedance when the $\overline{\text{OFF}}$ signal is at low level.
$\overline{\text{IAQ}}$	O/Z	Instruction capture signal. It becomes active low when an instruction address is on the address bus. It becomes high impedance when the $\overline{\text{OFF}}$ signal is at low level.
Oscillator/timer signal		
CLKOUT	O/Z	Master/clock output signal. A signal with the same frequency as the CPU machine cycle is output. The internal machine cycle is delimited at a rising edge of this signal. It becomes high impedance when the $\overline{\text{OFF}}$ signal is at low level.
CLKMD1 ~ CLKMD3	I	Clock mode select signal. These input signals are used to select a mode that is initialized after the clock generator is reset. The CLKMD1 to CLKMD3 logic level is latched when the reset pin is low and the clock mode register is initialized in the selected mode. The clock mode is changed by software after reset, but the clock mode select signal is not affected until the device is reset again.
X2/CLKIN	I	Oscillator input. This is an input to the onchip oscillator. If an internal oscillator is not used, X2/CLKIN functions as a clock input and is driven by the external clock source.
X1	O	Output pin from crystal internal oscillator. If the internal oscillator is not used, do not connect this pin. It does not become high impedance when the $\overline{\text{OFF}}$ signal is at low level.
TOUT0	O/Z	Timer 0 output. When onchip timer 0 count exceeds 0, a pulse is output. It has the same pulse width as CLKOUT. It becomes high impedance when the $\overline{\text{OFF}}$ signal is at low level.
TOUT1	O/Z	Timer 1 output. When onchip timer 1 count exceeds 0, a pulse is output. It has the same pulse width as CLKOUT. TOUT1 is output from the HPI $\overline{\text{HINT}}$ pin. It is disabled when HPI is disabled. It does not become high impedance when the $\overline{\text{OFF}}$ signal is at low level.
Multi-channel buffered serial port signal		
BCLKR0 BCLKR1	I/O/Z	Receive clock input. BCLKR can be used as input and output, and becomes input after reset. It is a serial shift clock of the receive side buffered serial port.
BDR0 BDR1	I	Serial data reception input.
BFSR0 BFSR1	I/O/Z	Reception input frame synchronous pulse. BFSR can be used as input and output, and becomes input after reset. The BFSR pulse ends BDR and initializes data reception.
BCLKX0 BCLKX1	I/O/Z	Transmission clock. BCLKX is a McBSP transmission serial shift clock. BCLKX can be used as input and output, and becomes input after reset. It becomes high impedance when the $\overline{\text{OFF}}$ signal is at low level.
BDX0 BDX1	O/Z	Serial data transmission output. BDX becomes high impedance when transmission is not performed, $\overline{\text{RS}}$ is low, or $\overline{\text{OFF}}$ is low.
BFSX0 BFSX1	I/O/Z	Transmission I/O frame synchronizing pulse. The BFSX pulse initializes data transmission. It can be used as input and output, and becomes input after reset. It becomes high impedance when the $\overline{\text{OFF}}$ signal is low.
Other signals		
NC		No connection.

SEMICONDUCTOR DATA

Pin name	Type*	Description
		Host port interface (HPI) signal
HD0~ HD7	I/O/Z	Parallel bi-directional data bus. The HPI data bus is used by the host device bus to exchange data with the HPI register. It becomes high impedance when data is not output or $\overline{OFF}$ is low. The HPI data bus has a bus holder to reduce power consumption of unused pins. When the DSP does not drive the HPI data bus, the bus holder retains the preceding logic level. The HPI data bus holder is disabled on reset, and can be enabled/disabled through the HBH bit of the BSCR.
HCNTL0 HCNTL1	I	Control signal. HCNTL0 and HCNTL1 select one of three HPI registers for accessing the host. Control input includes an internal pull-up register that is enabled only when HPIENA = 0.
HBIL	I	Byte recognition signal. HBIL recognizes the first or second byte to be transmitted. HBIL input includes an internal pull-up register that is enabled only when HPIENA = 0.
$\overline{HCS}$	I	Chip select signal. $\overline{HCS}$ selects HPI input and is driven to low during access. The chip select signal includes an internal pull-up register that is enabled only when HPIENA = 0.
$\overline{HDS1}$ $\overline{HDS2}$	I	Data strobe signal. $\overline{HDS1}$ and $\overline{HDS2}$ are driven by host read and write strobe for the control signal. There is an internal pull-up register that is enabled only when HPIENA = 0.
$\overline{HAS}$	I	Address strobe signal. $\overline{HAS}$ is necessary for the host with multiplexed address and data pins to latch an address with the HPIA register. There is an internal pull-up register that is enabled only when HPIENA = 0.
HR/$\overline{W}$	I	Read/write. HR/$\overline{W}$ controls HPI transfer direction. There is an internal pull-up register that is enabled only when HPIENA = 0.
HRDY	O/Z	Ready signal. Ready output notifies the host that the HPI is ready to transmit. It becomes high impedance when the $\overline{OFF}$ signal is low.
$\overline{HINT}$	O/Z	Host interrupt signal. This output is used to interrupt the host. When the DSP is reset, it goes high. $\overline{HINT}$ can be used as timer 1 output (TOUT1) when HPI is disabled. It becomes high impedance when the $\overline{OFF}$ signal is low.
HPIENA	I	HPI module select signal. To enable HPI, this pin must be made high on reset. The internal pulldown register is always active and the HPIENA pin is sampled at a rising edge of $\overline{RS}$. When HPIENA is open or low on reset, the HPI module is disabled. The HPIENA pin is not affected until the DSP is reset.
		Power supply pins
CVDD	S	+VDD. CPU core 1.8V power supply.
DVDD	S	+VDD. I/O pin 3.3V power supply.
Vss	S	Ground.
		Test pins
TCK	I	IEEE standard 1149.1 test clock. Normally, clock input with a duty ratio of 50%. When the input signal (TMS, TDI) changes on the TAP (test access port), it is loaded into the TAP controller, instruction register, and test data register at a rising edge of TCK. The TAP output signal (TDO) data changes at a falling edge of TCK.
TDI	I	IEEE standard 1149.1 test data input pin with an internal pull-up device. TDI data is loaded into a register (instruction or data) at a rising edge of TCK.
TDO	O/Z	IEEE standard 1149.1 test data output pin. The contents of a register (instruction or data) are output from TDO at a falling edge of TCK. TDO is high impedance except during data scan processing. It also becomes high impedance when the $\overline{OFF}$ signal is low.
TMS	I	IEEE standard 1149.1 test mode select pin with an internal pull-up device. The serial control input is loaded into the TAP controller at a rising edge of TCK.
$\overline{TRST}$	I	IEEE standard 1149.1 test reset pin with internal pulldown device. When it is high, the device enters the IEEE standard 1149.1 scan system control mode. If it is low or not connected, the IEEE standard 1149.1 signal is ignored.
EMU0	I/O/Z	Emulator pin 0. When the $\overline{TRST}$ pin is low, this pin must be high . When the $\overline{TRST}$ pin is high, this pin is used as an interrupt for the emulator system and becomes an I/O for the IEEE standard 1149.1 scan.
EMU1/ $\overline{OFF}$	I/O/Z	Emulator 1 pin/output control pin. When the $\overline{TRST}$ pin is high, this pin is used as an interrupt for the emulator system and becomes an I/O for the IEEE standard 1149.1 scan system. When the $\overline{TRST}$ pin is low, all outputs are high impedance. Note that the $\overline{OFF}$ pin is exclusive for test and emulation. (They cannot be executed at the same time.) $\overline{OFF}$ conditions are as follows; $\overline{TRST}$ = L, EMU0 = H, EMU1/$\overline{OFF}$ = L.

* I = Input, O = Output, Z = High impedance, S = Supply

SEMICONDUCTOR DATA

CODEC (24 bit) : AK4524 (Control unit IC518)

■ Block diagram

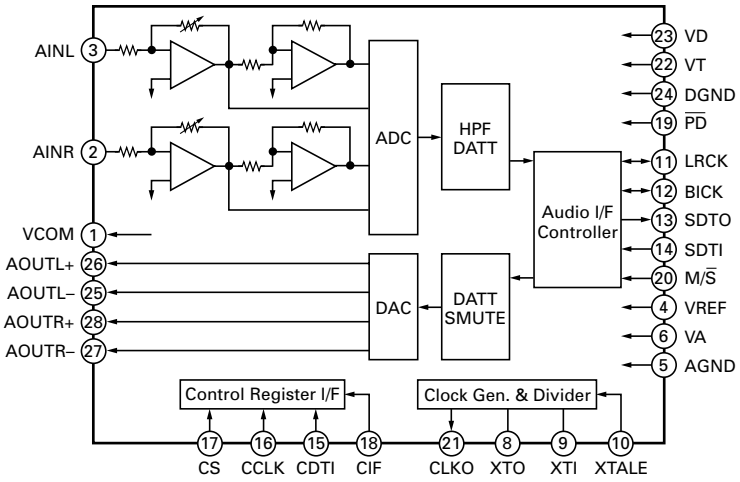

■ Pin function

No.	Name	I/O	Function
1	VCOM	O	Common voltage output pin, VA/2. Bias voltage os ADC inputs and DAC outputs.
2	AINR	I	Rch analog input pin.
3	AINL	I	Lch analog input pin.
4	VREF	I	Voltage reference input pin, VA. Used as a voltage reference by ADC & DAC, VREF is connected externally to filtered VA.
5	AGND	–	Analog ground pin.
6	VA	–	Analog power supply pin, 4.75~5.25V
7	TEST	I	Test pin. (Internal pull-down pin)
8	XTO	O	X'tal output pin.
9	XTI	I	X'tal/master clock input pin.
10	XTALE	I	X'tal osc enable pin. "H" : Enable, "L" : Disable
11	LRCK	I/O	Input/output channel clock pin.
12	BICK	I/O	Audio serial data clock pin.
13	SDTO	O	Audio serial data output pin.
14	SDTI	I	Audio serial data input pin.
15	CDTI	I	Control data input pin.
16	CCLK	I	Control data clock pin.
17	CS	I	Chip select pin.
18	CIF	I	Control data I/F format pin. "H" : CS falling trigger, "L" : CS rising trigger
19	$\overline{PD}$	I	Power down mode in. "H" : Power up, "L" : Power down reset and initialize the control register.
20	M/$\overline{S}$	I	Master/slave mode pin. "H" : Master mode, "L" : Slave mode
21	CLKO	O	Master clock output pin.
22	VT	–	Output buffer power supply pin, 2.7~5.25V.
23	VD	–	Digital power supply pin, 4.75~5.25V.
24	DGND	–	Digital ground pin.
25	AOUTL–	O	Lch negative analog output pin.
26	AOUTL+	O	Lch positive analog output pin.
27	AOUTR–	O	Rch negative analog output pin.
28	AOUTR+	O	Rch positive analog output pin.

Note : All input pins except pull-down pins should not be left floating.

Mixer : TA4101F (TX-RX 1 unit IC6)

■ Equivalent circuit

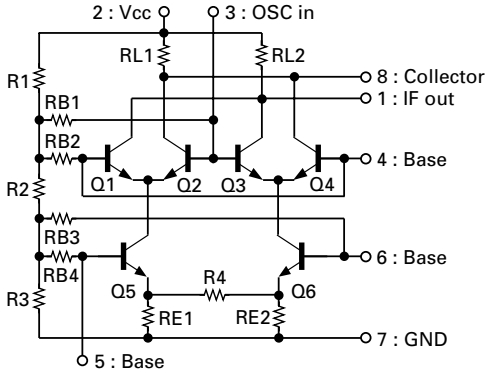

SEMICONDUCTOR DATA

CODEC (16 bit) : AK4518
(Control unit IC522,523)

■ Block diagram

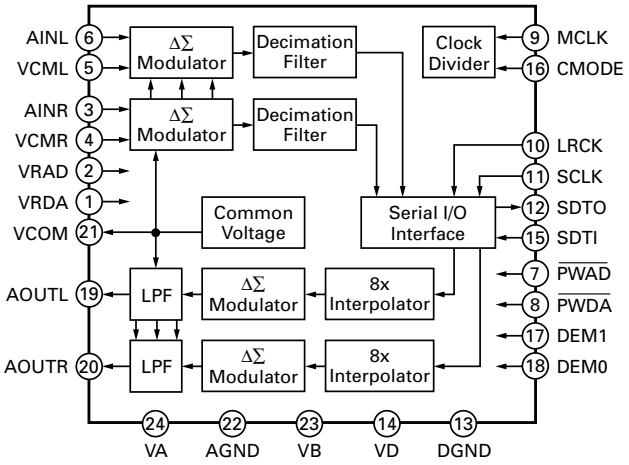

■ Pin function

No.	Name	I/O	Function
1	VRDA	I	Voltage reference input pin for DAC, VA.
2	VRAD	I	Voltage reference input pin for ADC, VA.
3	AINR	I	Rch analog input pin.
4	VCMR	O	Rch common voltage output pin, 0.45 x VA. Connect a 4.7μF electrolytic capacitor and 0.1μF ceramic capacitor between this pin and AGND.
5	VCML	O	Lch common voltage output pin, 0.45 x VA. Connect a 4.7μF electrolytic capacitor and 0.1μF ceramic capacitor between this pin and AGND.
6	AINL	I	Lch analog input pin.
7	$\overline{\text{PWAD}}$	I	ADC power down mode pin. "L" : Power down
8	$\overline{\text{PWDA}}$	I	DAC power down mode pin. "L" : Power down
9	MCLK	I	Master clock input pin.
10	LRCK	I	Input/output channel clock pin.
11	SCLK	I	Audio serial data clock pin.
12	SDTO	O	Audio serial data output pin.
13	DGND	–	Digital ground pin.
14	VD	–	Digital power supply pin.
15	SDTI	I	Audio serial data input pin.
16	CMODE	I	Master clock select pin. "H" : 384fs or 512fs, "L" : 256fs
17	DEM1	I	De-emphasis frequency select pin.
18	DEM0	I	De-emphasis frequency select pin.
19	AOUTL	O	Lch analog output pin.
20	AOUTR	O	Rch analog output pin.
21	VCOM	O	Common voltage output pin, 0.45 x VA. Connect a 4.7μF electrolytic capacitor and 0.1μF ceramic capacitor between this pin and AGND.
22	AGND	–	Analog ground pin.
23	VB	–	Substrate pin.
24	VA	–	Analog power supply pin.

Amplifier : UPC2709TB
(TX-RX 2 unit IC405, 415,416, TX-RX 3 unit IC1)

■ Equivalent circuit

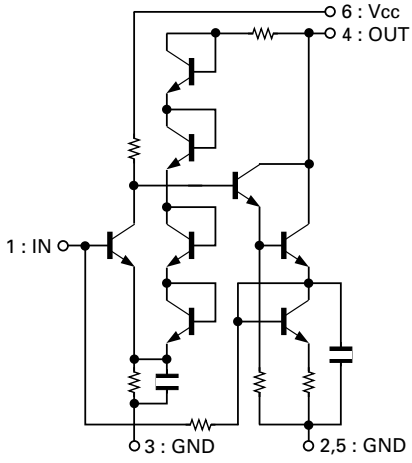

SEMICONDUCTOR DATA

DDS : AD9835 (TX-RX 1 unit IC601~603, TX-RX 2 unit IC406~408)

■ Block diagram

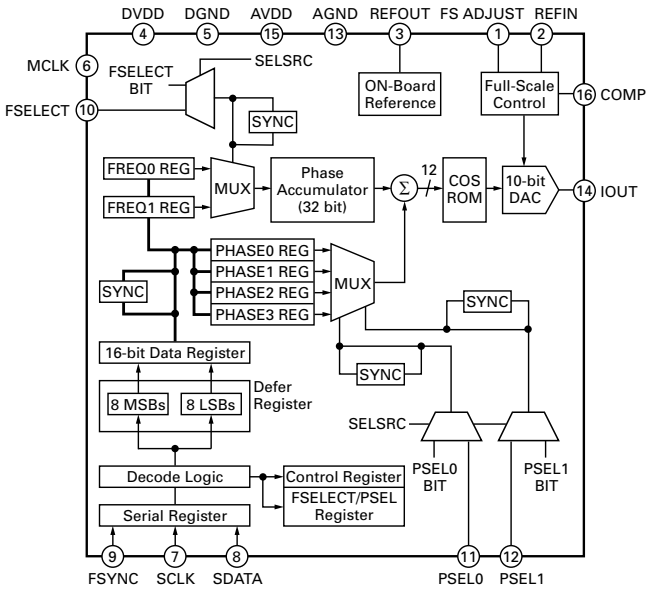

■ Pin function

No.	Symbol	Function
Analog signal and reference		
1	FS ADJUST	Full-scale adjust control.
2	REFIN	Voltage reference input.
3	REFOUT	Voltage reference output.
14	IOUT	Current output.
16	COMP	Compensation pin.
Power supply		
4	DVDD	Positive power supply for the digital section.
5	DGND	Digital ground.
13	AGND	Analog ground.
15	AVDD	Positive power suply fot the analog section.
Digital interface and control		
6	MCLK	Digital clock input.
7	SCLK	Serial clock, logic input.
8	SDATA	Serial data in, logic input.
9	FSYNC	Data synchronization signal, logic input.
10	FSELECT	Frequency select input.
11	PSEL0	Phase select input.
12	PSEL1	

DAC : M62363FP (TX-RX 1 unit IC14)

■ Block diagram

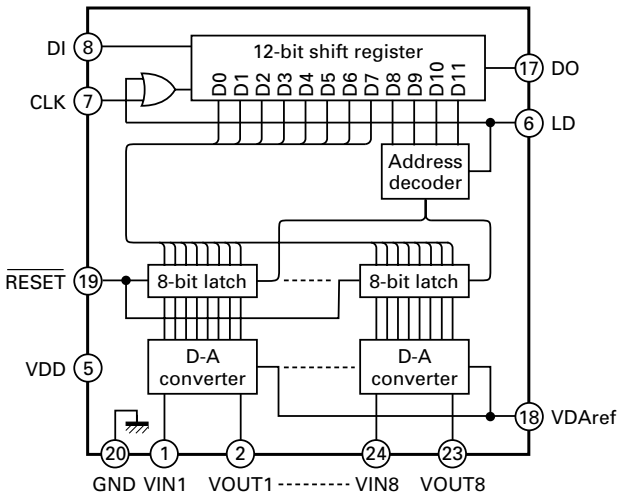

■ Pin function

No.	Symbol	Function
8	DI	Serial data input terminal.
17	DO	Serial data output terminal.
7	CLK	Serial clock input terminal.
6	LD	LD terminal input high level then latch circuit data load.
19	$\overline{\text{RESET}}$	Reset terminal.
2	VOUT1	8-bit resolution D-A output.
3	VOUT2	
10	VOUT3	
11	VOUT4	
14	VOUT5	
15	VOUT6	
22	VOUT7	
23	VOUT8	
5	VDD	Power supply terminal.
20	GND	GND terminal.
1	VIN1	D-A converter input terminal.
4	VIN2	
9	VIN3	
12	VIN4	
13	VIN5	
16	VIN6	
21	VIN7	
24	VIN8	
18	VDAref	D-A converter reference voltage input terminal. VO = (VIN – VDAref) x n / 256 + VDAref

SEMICONDUCTOR DATA

PLL : LMX2306TMX (TX-RX 2 unit IC401,409~412,414)

PLL : LMX2316TMX (TX-RX 2 unit IC402, TX-RX 3 unit IC5)

■ Block diagram

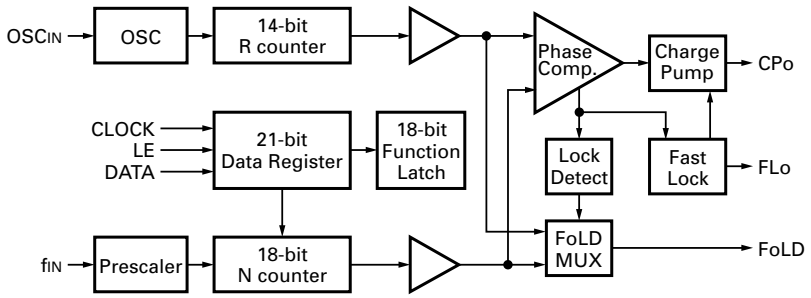

■ Pin description

No.	Name	I/O	Description
1	FLo	O	FastLock output. For connection of parallel resistor to the loop filter.
2	CPo	O	Charge pump output. For connection to a loop filter for driving the input of an external VCO.
3	GND	–	Charge pump ground.
4	GND	–	Analog ground.
5	$\overline{f_{IN}}$	I	RF prescaler complementary input. A bypass capacitor should be placed as close as possible to this pin and be connected directly to the ground plane. The complementary input can be left unbypassed, with some degradation in RF sensitivity.
6	fIN	I	RF prescaler input. Small signal input from the VCO.
7	Vcc1	–	Analog power supply voltage input. Input may range from 2.3V to 5.5V. Bypass capacitors should be placed as close as possible to this pin and be connected directly to the ground plane. Vcc1 must equal Vcc2.
8	OSCIN	I	Oscillator input. This input is a CMOS input with a threshold of approximately Vcc/2 and an equivalent 100k input resistance. The oscillator input is driven from a reference oscillator.
9	GND	–	Digital ground.

No.	Name	I/O	Description
10	CE	I	Chip enable. A LOW on CE powers down the device and will TRI-STATE the charge pump output. Taking CE HIGH will power up the device depending on the status of the power down bit F2.
11	Clock	I	High impedance CMOS clock input. Data for the various counters is clocked in on the rising edge into the 21-bit shift register.
12	Data	I	Binary serial data input. Data entered MSB first. The last two bits are the control bits. High impedance CMOS input.
13	LE	I	Load enable CMOS input. When LE goes high, data stored in the shift registers is loaded into one of the 3 appropriate latches (control bit dependent).
14	Fo/LD	O	Multiplexed output of the RF programmable of reference dividers and lock detect. CMOS output.
15	Vcc2	–	Digital power supply voltage input. Input may range from 2.3V to 5.5V. Bypass capacitors should be placed as close as possible to this pin and be connected directly to the ground plane. Vcc1 must equal Vcc2.
16	Vp	–	Power supply for charge pump. Must be ≥ Vcc.

SEMICONDUCTOR DATA

DDS : AD9851BRS (TX-RX 3 unit IC4)

■ Block diagram

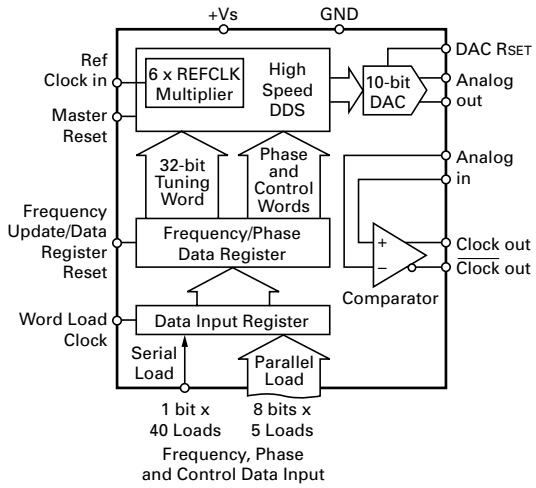

■ Pin function

No.	Name	Function
1~4 25~28	D3~D0 D7~D4	8-bit data input. The data port for loading the 32-bit frequency and 8-bit phase/control words. D7 = MSB, D0 = LSB. D7, pin 25, also serves as the input pin 40-bit serial data word.
5	PGND	6 x REFCLK multiplier ground connection.
6	PVCC	6 x REFCLK multiplier positive supply voltage pin.
7	W CLK	Word load clock. Rising edge loads the parallel or serial frequency/phase/control words asynchronously into the 40-bit input register.
8	FQ UD	Frequency update. Arising edge asynchronously transfers the contents of the 40-bit input register to be acted upon by the DDS core. FQ UD should be issued when the contents of the input register are known to contain only valid, allowable data.
9	REFCLOCK	Reference clock input. CMOS/TTL level pulse train, direct or via the 6 x REFCLK multiplier. In direct mode, this is also the SYSTEM CLOCK. If the 6 x REFCLK multiplier is engaged, then the output of the multiplier is the SYSTEM CLOCK. The rising edge of the SYSTEM CLOCK initiates operations.
10,19	AGND	Analog ground. The ground return for the analog circuitry (DAC and comparator).
11,18	AVDD	Positive supply voltage for analog circuitry (DAC and comparator, pin 18) and bandgap voltage reference (pin 11).
12	RSET	The DAC's external RSET connection– nominally a 3.92kΩ resistor to ground for 10mA out. This sets the DAC full-scale output current available from IOUT and IOUTB. RSET = 39.93/IOUT.
13	VOUTN	Voltage output negative. The comparator's "complementary" CMOS logic level output.
14	VOUTP	Voltage output positive. The comparator's "true" CMOS logic level output.
15	VINN	Voltage input negative. The comparator's inverting input.
16	VINP	Voltage input positive. The comparator's noninverting input.
17	DACBP	DAC bypass connection. This is he DAC voltage reference bypass connection normally NC (no connect) for optimum SFDR performance.
20	IOUTB	The "complementary" DAC output with same characteristics as IOUT except that IOUTB = (full-scale output – IOUT). Output load should equal that of IOUT for best SFDR performance.
21	IOUT	The "true" output of the balanced DAC. Current is "sourcing" and requires current to voltage conversion, usually a resistor or transformer referenced to GND. IOUT = (full-scale output – IOUTB).
22	RESET	Master reset pin, active high, clears DDS accumulator and phase offset register to achieve 0Hz and 0° output phase. Sets programming to parallel mode and disengages the 6 x REFCLK multiplier. Reset does mot clear the 40-bit input register. On power up, asserting RESET should be the first priority before programming commences.
23	DVDD	Positive supply voltage pin for digital circuitry.
24	DGND	Digital ground. The ground return pin for the digital circuitry.

PARTS LIST

✻ New Parts. ⚠ indicates safety critical components.
Parts without **Parts No.** are not supplied.
Les articles non mentionnes dans le **Parts No.** ne sont pas fournis.
Teile ohne **Parts No.** werden nicht geliefert.

L : Scandinavia **K**: USA **P** : Canada
Y : PX (Far East, Hawaii) **T** : England **E** : Europe
Y : AAFES (Europe) **X**: Australia **M**: Other Areas

TS-2000/X

Ref. No.	Address	New parts	Parts No.	Description	Destination
			TS-2000/X		
1	2A	✻	A01-2176-01	CABINET (UPPER)	
2	1D	✻	A01-2177-01	CABINET (BOTTOM)	
3	2C	✻	A10-4017-01	CHASSIS	
4	1B	✻	A11-0417-01	SUB CHASSIS	
5	1F	✻	A22-2502-21	SUB PANEL	
6	2E	✻	A62-0771-03	PANEL ASSY	
7	1C		B09-0355-05	CAP	
8	2E	✻	B10-2608-02	FRONT GLASS	
10	1I	✻	B42-7003-04	RATING LABEL (DC CORD)	E,E2
18	2E		B43-1222-04	BADGE	
12	1J		B46-0310-03	WARRANTY CARD	E,E2
12	1J	✻	B46-0469-10	WARRANTY CARD	K,KX
13	1J	✻	B52-0614-00	SCHEMATIC DIAGRAM	
14	1J	✻	B52-0616-00	SCHEMATIC DIAGRAM	
15	1J	✻	B52-0617-00	SCHEMATIC DIAGRAM	
27	1J	✻	B52-0618-00	SCHEMATIC DIAGRAM	
28	1J	✻	B59-1777-00	PAMPHLET	E,E2
16	1J	✻	B62-1221-10	INSTRUCTION MANUAL (ENGLISH)	K,KX,E
16	1J	✻	B62-1222-00	INSTRUCTION MANUAL (FRENCH)	E
16	1J	✻	B62-1223-10	INSTRUCTION MANUAL (SPANISH)	E2
16	1J	✻	B62-1224-00	INSTRUCTION MANUAL (GERMAN)	E
16	1J	✻	B62-1225-00	INSTRUCTION MANUAL (ITALIAN)	E
16	1J	✻	B62-1226-00	INSTRUCTION MANUAL (DUTCH)	E
17	2C	✻	B72-1641-04	MODEL NAME PLATE	K
17	2C	✻	B72-1642-14	MODEL NAME PLATE	E,E2
17	2C	✻	B72-1879-04	MODEL NAME PLATE	KX
19	2C		E04-0167-05	RF COAXIAL PECEPTACLE (M)	
20	2C		E04-0170-05	RF COAXIAL RECEPTACLE (N)	
21	2I		E07-0751-05	DIN PLUG (7P ACC)	
22	2I		E07-0851-05	DIN PLUG (8P ACC)	
-			E07-0852-15	ROUND PLUG	
24	2I		E07-1351-05	DIN PLUG (13P ACC)	
25	2C	✻	E23-1164-04	EARTH LUG (ANT)	
26	1I		E30-3157-15	DC CORD	
27	2C,3C,2F	✻	E37-0866-05	FLAT CABLE (X57-605 CN26,800)	
28	1B	✻	E37-0867-05	FLAT CABLE (X57-606B CN501)	
29	3C	✻	E37-0868-05	FLAT CABLE (X53 CN6)	
30	1C	✻	E37-0869-05	FLAT CABLE (X53 CN504)	
31	2B	✻	E37-0870-05	FLAT CABLE (X57-606A CN12)	
32	1C	✻	E37-0871-05	FLAT CABLE (X45A CN9)	
33	2B	✻	E37-0872-05	FLAT CABLE (X57-606A CN14)	
34	3B	✻	E37-0873-05	LEAD WIRE WITH TERMINAL (X45A CN203, +B)	
35	3B	✻	E37-0874-05	LEAD WIRE WITH TERMINAL (X45A CN204, GND)	
-		✻	E37-0875-05	LEAD WIRE WITH MINIPIN PLUG (X57-606B CN502)	
-		✻	E37-0876-05	LEAD WIRE WITH MINIPIN PLUG (X57-606C CN506)	
-		✻	E37-0877-05	LEAD WIRE WITH MINIPIN PLUG (X57-606A CN8,13)	
-		✻	E37-0878-05	LEAD WIRE WITH MINIPIN PLUG (X51 CN20, HF RX)	
-		✻	E37-0879-05	LEAD WIRE WITH MINIPIN PLUG (X45A CN1, HFTX)	
-		✻	E37-0880-05	LEAD WIRE WITH MINIPIN PLUG (X57-606A CN6)	
-		✻	E37-0881-05	LEAD WIRE WITH MINIPIN PLUG (X45A CN2, 14TX)	
-		✻	E37-0882-05	LEAD WIRE WITH MINIPIN PLUG (X51 CN21, 14RX)	
-		✻	E37-0883-05	LEAD WIRE WITH MINIPIN PLUG (X57-606A CN2,3)	
-		✻	E37-0886-05	LEAD WIRE WITH CONNECTOR (X53 CN505)	
-		✻	E37-0887-05	LEAD WIRE WITH CONNECTOR (X53 CN503)	
-		✻	E37-0888-05	LEAD WIRE WITH CONNECTOR (X57-606A CN9)	
-		✻	E37-0889-05	LEAD WIRE WITH CONNECTOR (X57-605A CN31,32)	
-		✻	E37-0890-05	LEAD WIRE WITH CONNECTOR (X57-606A CN10)	
50	2C	✻	E37-0891-05	LEAD WIRE WITH CONNECTOR (EXT AT)	
-		✻	E37-0897-05	LEAD WIRE WITH CONNECTOR (X57-607 CN1)	KX
-		✻	E37-0898-05	LEAD WIRE WITH CONNECTOR (X57-607 CN5)	KX
53	1B	✻	E37-0946-05	FLAT CABLE (X57-606B CN533)	
54	3C	✻	E37-0947-05	FLAT CABLE (X53 CN1)	
55	2F	✻	E37-0948-05	FLAT CABLE (X54 CN1)	
-		✻	E37-0951-05	LEAD WIRE WITH MINIPIN PLUG (X51 CN4)	
-		✻	E37-0952-05	LEAD WIRE WITH MINIPIN PLUG (X51 CN12,13)	
-		✻	E37-0953-05	LEAD WIRE WITH MINIPIN PLUG (X57-606A CN18)	
-		✻	E37-0957-05	LEAD WIRE WITH CONNECTOR (X51 CN10)	
-		✻	E37-0958-05	LEAD WIRE WITH CONNECTOR (X51 CN9)	
61	3B	✻	E37-0959-05	LEAD WIRE WITH CONNECTOR (SP)	
62	3C	✻	E37-0963-05	FLAT CABLE (X57-607 CN6)	KX
65	1I,2I		F05-2531-05	FUSE (BLADE) 25A/32V	
66	2I		F06-4027-05	FUSE (BLADE) 4A/32V	
67	1C	✻	F07-1849-05	COVER	
68	1C		F09-0453-05	CAP	
69	3C	✻	F09-0471-05	FANMOTOR	
70	2B	✻	F10-2328-02	SHIELDING PLATE	
71	2B	✻	F10-2330-13	SHIELDING COVER	
72	3B	✻	F10-2366-03	SHIELDING PLATE	KX
73	2B	✻	F10-2398-04	SHIELDING COVER	
74	3G	✻	F12-0463-04	SHIELDIBG SHEET	
-		✻	F15-0700-04	SHIELDING PLATE	K,E,E2
75	1A		F20-1185-04	INSULATING SHEET	
76	3B		F29-0014-05	INSULATING BUSH	
78	3E		G02-0505-05	KNOB SPRING	
79	1C		G02-0570-04	FLAT SPRING	
-			G02-0729-14	FLAT SPRING (1.2G, A25)	KX
80	3E	✻	G02-0854-03	FLAT SPRING	
81	2A	✻	G02-0875-04	EARTH SPRING	
82	2F	✻	G02-0879-04	EARTH SPRING	
83	3B	✻	G02-0881-04	FLAT SPRING	
84	3E		G09-0405-05	KNOB SPRING	
110	2E		G10-0789-04	FIBROUS SHEET	
85	3E	✻	G10-1258-04	FIBROUS SHEET	
86	2A,3A	✻	G10-1277-04	FIBROUS SHEET	
87	1F	✻	G10-1278-04	FIBROUS SHEET	
88	3D	✻	G10-1281-04	FIBROUS SHEET	
98	2F		G11-2521-04	SHEET	
89	3C		G11-2588-04	RUBBER SHEET	
90	1I	✻	G11-2698-04	SHEET	
91	2F	✻	G11-4035-04	SHEET	
92	2F	✻	G11-4036-04	SHEET	
93	2F	✻	G11-4037-14	SHEET	
94	2F	✻	G11-4038-04	SHEET	
95	2F	✻	G11-4039-14	SHEET	
96	2F	✻	G11-4041-04	SHEET	
97	3C	✻	G11-4042-04	SHEET	
108	2F	✻	G11-4045-04	SHEET	
99	2E	✻	G13-1775-13	CUSHION	

K : TS-2000 (K) **KX : TS-2000X (K)**
E : TS-2000 (E) **E2 : TS-2000 (E2)**

PARTS LIST

TS-2000/X
FINAL UNIT (X45-360X-XX)

Ref. No.	Address	New parts	Parts No.	Description	Destination
100	3B	*	G13-1793-04	CUSHION	
101	3A	*	G13-1855-04	CUSHION	
102	1C	*	G13-1856-04	CUSHION	
103	1D	*	G13-1868-04	CUSHION	
104	1G	*	G13-1869-05	CONDUCTIVE CUSHION	
105	1H	*	G13-1870-05	CONDUCTIVE CUSHION	
106	1H	*	G13-1871-05	CONDUCTIVE CUSHION	
107	3H	*	G13-1872-05	CONDUCTIVE CUSHION	
-		*	G13-1877-05	CONDUCTIVE CUSHION	KX
-		*	G13-1878-05	CONDUCTIVE CUSHION	KX
109	2J	*	H52-1509-02	ITEM CARTON CASE	K
109	2J	*	H52-1712-02	ITEM CARTON CASE	KX
109	2J	*	H52-1773-02	ITEM CARTON CASE	E,E2
111	1D		J02-0440-04	FOOT	
112	3A,2D		J02-0441-05	FOOT	
113	2D		J02-0442-04	FOOT	
114	1D		J02-0475-05	FOOT	
115	3B	*	J21-8414-04	HARDWARE FIXTURE	
116	1E		J31-0141-04	COLLAR	
117	3E	*	J39-0638-04	SPACER	
-			J61-0307-05	BAND	
120	2A		K01-0420-05	HANDLE	
121	3E	*	K21-1104-03	KNOB	
122	2E	*	K29-5391-02	KEY TOP	
123	2F	*	K29-5392-12	KEY TOP	
124	2F	*	K29-5393-12	KEY TOP	
125	2F	*	K29-5394-12	KEY TOP	
126	3E	*	K29-5395-04	KNOB RING	
127	3E	*	K29-5396-03	KNOB	
128	3E	*	K29-5397-13	KNOB	
129	3E	*	K29-5398-03	KNOB	
130	3E	*	K29-5399-03	KNOB	
-			L79-1407-05	LINE FILTER	
133	2I		L79-1408-05	LINE FILTER (WITH BAND)	E,E2
A	1F		N14-0569-04	CIRCULAR NUT	
B	2C		N15-1040-46	FLAT WASHER	
C	3E	*	N19-0670-05	SPECIAL WASHER	
D	1F	*	N19-0673-05	SPECIAL WASHER	
E	2A,1D		N33-3006-45	OVAL HEAD MACHINE SCREW	
F	1D,2D		N35-3008-41	BINDING HEAD MACHINE SCREW	
G	3C		N35-3020-46	BINDING HEAD MACHINE SCREW	
H	2C		N35-4010-46	BINDING HEAD MACHINE SCREW	
J	2A		N67-2608-46	PAN HEAD SEMS SCREW W	
K	2A,3B		N68-4006-46	PAN HEAD SEMS SCREW A	
L	1E,2F		N87-2606-46	BRAZIER HEAD TAPTITE SCREW	
M	2B,2F		N87-2608-46	BRAZIER HEAD TAPTITE SCREW	
N	3E		N90-3008-46	TP HEAD MACHINE SCREW	
135	1I	*	N99-2024-05	SCREW SET	
-			S50-1406-05	TACT SWITCH	
139	3B		T07-0252-35	SPEAKER	
140	1I		T91-0352-15	MICROPHONE	
142	2F		W02-1836-05	ENCODER	
143	1F	*	W02-3619-05	ENCODER	
-			W09-0873-05	LITHIUM CELL (X57-605 A)	
146	2E	*	212-2017-05	HEAT-PROOF TUBE	

Ref. No.	Address	New parts	Parts No.	Description			Destination
FINAL UNIT (X45-360X-XX) 0-11 : K,KX 2-71 : E,E2							
C1			CK73FB1E104K	CHIP C	0.10UF	K	
C2			CK73FB1H103K	CHIP C	0.010UF	K	
C3			CK73FB1E104K	CHIP C	0.10UF	K	
C4			CK73FB1H103K	CHIP C	0.010UF	K	
C5			CK73FB1H102K	CHIP C	1000PF	K	
C6			CK73FB1E104K	CHIP C	0.10UF	K	
C7			CK73FB1C105K	CHIP C	1.0UF	K	
C8,9			CK73FB1E104K	CHIP C	0.10UF	K	
C10			CK73FB1C105K	CHIP C	1.0UF	K	
C11			CK73FB1H102K	CHIP C	1000PF	K	
C12			CE04EW1E100M	ELECTRO	10UF	25WV	
C13			CK73FB1E104K	CHIP C	0.10UF	K	
C14			CK73FB1H102K	CHIP C	1000PF	K	
C15			CK73FB1E104K	CHIP C	0.10UF	K	
C17			CK73FB1E104K	CHIP C	0.10UF	K	
C20			CC73FCH1H331J	CHIP C	330PF	J	
C21			CK73FB1E104K	CHIP C	0.10UF	K	
C22			CK73FB1H102K	CHIP C	1000PF	K	
C24			CK73FB1E104K	CHIP C	0.10UF	K	
C25			CK73FB1C105K	CHIP C	1.0UF	K	
C26			CC73FCH1H390J	CHIP C	39PF	J	
C27			CC73FCH1H470J	CHIP C	47PF	J	
C29,30			CK73EB1H104K	CHIP C	0.10UF	K	
C31			C93-0569-05	CHIP C	56PF	J	
C32			CK73FB1H102K	CHIP C	1000PF	K	
C33			CE04EW1E100M	ELECTRO	10UF	25WV	
C34			CE04EW1E470M	ELECTRO	47UF	25WV	
C35			CK73FB1E104K	CHIP C	0.10UF	K	
C36			CK73FB1C105K	CHIP C	1.0UF	K	
C37			CK73FB1H102K	CHIP C	1000PF	K	
C38			CK73FB1E104K	CHIP C	0.10UF	K	
C39			CK73FB1H102K	CHIP C	1000PF	K	
C40			CK73FB1C105K	CHIP C	1.0UF	K	
C41,42			CK73FB1E104K	CHIP C	0.10UF	K	
C43			CK73FB1H103K	CHIP C	0.010UF	K	
C44			CK73FB1C105K	CHIP C	1.0UF	K	
C45			CK73FB1H103K	CHIP C	0.010UF	K	
C46			C93-0568-05	CHIP C	47PF	J	
C47			CM73F2H271J	CHIP C	270PF	J	
C48			CM73F2H391J	CHIP C	390PF	J	
C49-56		*	C93-0608-05	CHIP C	2700PF	K	
C57,58			C93-0572-05	CHIP C	100PF	J	
C59,60			C93-0568-05	CHIP C	47PF	J	
C61			CM73F2H331J	CHIP C	330PF	J	
C63			C93-0555-05	CHIP C	5.0PF	C	
C67			C93-0555-05	CHIP C	5.0PF	C	
C68			CK73FB1E104K	CHIP C	0.10UF	K	
C69			CK73FB1H102K	CHIP C	1000PF	K	
C70			CE04EW1E100M	ELECTRO	10UF	25WV	
C71			CK73FB1H103K	CHIP C	0.010UF	K	
C72			CK73FB1E104K	CHIP C	0.10UF	K	
C73			CK73FB1H102K	CHIP C	1000PF	K	
C74			CK73FB1E104K	CHIP C	0.10UF	K	
C79		*	C90-4089-05	ELECTRO	220UF	25WV	
C101			C93-0567-05	CHIP C	39PF	J	
C102			C93-0560-05	CHIP C	10PF	D	
C104			C93-0572-05	CHIP C	100PF	J	
C106			C93-0572-05	CHIP C	100PF	J	

K : TS-2000 (K) **KX : TS-2000X (K)**
E : TS-2000 (E) **E2 : TS-2000 (E2)**

PARTS LIST

FINAL UNIT (X45-360X-XX)

Ref. No.	Address	New parts	Parts No.	Description			Destination
C107			CM73F2H271J	CHIP C	270PF	J	
C108			CM73F2H221J	CHIP C	220PF	J	
C110			CM73F2H271J	CHIP C	270PF	J	
C111			CM73F2H221J	CHIP C	220PF	J	
C117,118			CM73F2H151J	CHIP C	150PF	J	
C125		*	CK73EF1V225Z	CHIP C	2.2UF	Z	
C127			CK73FB1H102K	CHIP C	1000PF	K	
C130,131			CM73F2H151J	CHIP C	150PF	J	
C132			CC73FSL1H471J	CHIP C	470PF	J	
C133			CK73FB1H103K	CHIP C	0.010UF	K	
C135			CK73FB1E104K	CHIP C	0.10UF	K	
C138			CK73FB1H102K	CHIP C	1000PF	K	
C139,140			CC73FSL1H331J	CHIP C	330PF	J	
C141			CK73FB1H102K	CHIP C	1000PF	K	
C142			CK73FB1E104K	CHIP C	0.10UF	K	
C143			CK73FB1H471K	CHIP C	470PF	K	
C144			CE04EW1E100M	ELECTRO	10UF	25WV	
C145			CK73FB1H471K	CHIP C	470PF	K	
C146			CK73FB1E104K	CHIP C	0.10UF	K	
C147			CK73FB1H102K	CHIP C	1000PF	K	
C148			CC73FSL1H471J	CHIP C	470PF	J	
C149			CK73FB1H103K	CHIP C	0.010UF	K	
C150			CM73F2H680J	CHIP C	68PF	J	
C151,152			C93-0554-05	CHIP C	4.0PF	C	
C153			CM73F2H680J	CHIP C	68PF	J	
C154,155			C93-0554-05	CHIP C	4.0PF	C	
C157			CM73F2H200J	CHIP C	20PF	J	
C158,159			C93-0603-05	CHIP C	1000PF	K	
C160			C93-0560-05	CHIP C	10PF	D	
C161,162			CC73FCH1H100D	CHIP C	10PF	D	
C201,202			CK73FB1H102K	CHIP C	1000PF	K	
C203,204			CK73FB1H103K	CHIP C	0.010UF	K	
C205			C91-2691-05	CERAMIC	470PF	250WV	
C206			CK73FB1H103K	CHIP C	0.010UF	K	
C207			CE04EW1E471M	ELECTRO	470UF	25WV	
C208			CK73FB1H103K	CHIP C	0.010UF	K	
C209			CK73FB1E104K	CHIP C	0.10UF	K	
C210			CK73FB1H103K	CHIP C	0.010UF	K	
C211			CK73FB1E104K	CHIP C	0.10UF	K	
C212			CK73FB1H103K	CHIP C	0.010UF	K	
C213			CE04EW1E471M	ELECTRO	470UF	25WV	
C214			CK73FB1H103K	CHIP C	0.010UF	K	
C215			CK73FB1E104K	CHIP C	0.10UF	K	
C216			CK73FB1H102K	CHIP C	1000PF	K	
C217-221			CK73FB1E104K	CHIP C	0.10UF	K	
C222,223			CE04EW1E100M	ELECTRO	10UF	25WV	
C224			CE04EW1E102M	ELECTRO	1000UF	25WV	
C225,226			CK73FB1E104K	CHIP C	0.10UF	K	
C227			C90-2021-05	ELECTRO	10UF	25WV	
C228,229			CK73FB1E104K	CHIP C	0.10UF	K	
C230			CE04EW1E100M	ELECTRO	10UF	25WV	
C231			CK73FB1E104K	CHIP C	0.10UF	K	
C232-234			CK73FB1H103K	CHIP C	0.010UF	K	
C235,236			CK73FB1H102K	CHIP C	1000PF	K	
C237			CK73FB1H103K	CHIP C	0.010UF	K	
C238			CK73FB1H102K	CHIP C	1000PF	K	
C239			CE04EW1E470M	ELECTRO	47UF	25WV	
C240-244			CK73FB1H102K	CHIP C	1000PF	K	
C250			CE04EW1E471M	ELECTRO	470UF	25WV	
C251			CK73FB1E104K	CHIP C	0.10UF	K	

Ref. No.	Address	New parts	Parts No.	Description			Destination
C252			CC73FCH1H470J	CHIP C	47PF	J	
C253,254			CE04EW1C101M	ELECTRO	100UF	16WV	
C255			CK73FB1H103K	CHIP C	0.010UF	K	
C256			CE04EW1HR22M	ELECTRO	0.22UF	50WV	
C259,260			CM73F2H331J	CHIP C	330PF	J	
C262		*	CK73EF1V225Z	CHIP C	2.2UF	Z	
C263			CK73FB1E104K	CHIP C	0.10UF	K	
C264			CK73FB1H102K	CHIP C	1000PF	K	
C265			CK73FB1H103K	CHIP C	0.010UF	K	
C270			C93-0561-05	CHIP C	12PF	J	
C271			C93-0565-05	CHIP C	27PF	J	
C501,502			CK45FB1H103K	CERAMIC	0.010UF	K	
C511,512			CK45FB1H103K	CERAMIC	0.010UF	K	
C801-803			CK73FB1E104K	CHIP C	0.10UF	K	
C804			CK73FB1H102K	CHIP C	1000PF	K	
C805,806			C91-3115-05	HV CAP	10PF	2KV	
C807			CK73FB1E104K	CHIP C	0.10UF	K	
C808,809			CK73FB1H103K	CHIP C	0.010UF	K	
C810-815			C91-3115-05	HV CAP	10PF	2KV	
C816-821			CK73FB1H103K	CHIP C	0.010UF	K	
C822-827			C91-3115-05	HV CAP	10PF	2KV	
C828-833			CK73FB1H103K	CHIP C	0.010UF	K	
C834,835			C91-3115-05	HV CAP	10PF	2KV	
C836			C91-3126-05	HV CAP	10PF	3KV	
C837-842			CK73FB1H103K	CHIP C	0.010UF	K	
C843			C91-3126-05	HV CAP	10PF	3KV	
C844			C91-3127-05	HV CAP	18PF	3KV	
C845-850			CK73FB1H103K	CHIP C	0.010UF	K	
C851,852			C91-3127-05	HV CAP	18PF	3KV	
C853-858			CK73FB1H103K	CHIP C	0.010UF	K	
C859			C91-3127-05	HV CAP	18PF	3KV	
C860-865			CK73FB1H103K	CHIP C	0.010UF	K	
C866-869			C91-3123-05	HV CAP	150PF	3KV	
C870-875			CK73FB1H103K	CHIP C	0.010UF	K	
C876,877			C91-3123-05	HV CAP	150PF	3KV	
C878-883			CK73FB1H103K	CHIP C	0.010UF	K	
C884-887			C91-3123-05	HV CAP	150PF	3KV	
C888			CK73FB1E104K	CHIP C	0.10UF	K	
C890,891			C91-3127-05	HV CAP	18PF	3KV	
C901			CC73FCH1H470J	CHIP C	47PF	J	
C903			CE04EW1E470M	ELECTRO	47UF	25WV	
C904,905			CK73FB1H471K	CHIP C	470PF	K	
C906,907			CK73FB1H103K	CHIP C	0.010UF	K	
C908,909			CK73FB1H471K	CHIP C	470PF	K	
C911,912			CK73FB1H471K	CHIP C	470PF	K	
C914			CK73FB1C105K	CHIP C	1.0UF	K	
C915			CC73FCH1H101J	CHIP C	100PF	J	
C916			CK73FB1H103K	CHIP C	0.010UF	K	
C919,920			CK73FB1H471K	CHIP C	470PF	K	
C921			CK73FB1H103K	CHIP C	0.010UF	K	
C922			CK73FB1C105K	CHIP C	1.0UF	K	
C924			CK73FB1H103K	CHIP C	0.010UF	K	
C926			CK73FB1H471K	CHIP C	470PF	K	
C928			CE04EW1E100M	ELECTRO	10UF	25WV	
C931			CC73FCH1H180J	CHIP C	18PF	J	
C933			CE04EW1C470M	ELECTRO	47UF	16WV	
C934,935			CK73FB1H471K	CHIP C	470PF	K	
C936,937			CM73F2H330J	CHIP C	33PF	J	
C938			CK73FB1H103K	CHIP C	0.010UF	K	
C940			CK73FB1H471K	CHIP C	470PF	K	

K : TS-2000 (K) **KX : TS-2000X (K)**
E : TS-2000 (E) **E2 : TS-2000 (E2)**

PARTS LIST

FINAL UNIT (X45-360X-XX)

Ref. No.	Address	New parts	Parts No.	Description	Destination
C941,942			CK73FB1H103K	CHIP C 0.010UF K	
C943			C93-0564-05	CHIP C 22PF J	
C944			CE04EW1E100M	ELECTRO 10UF 25WV	
C945,946			CK73FB1H471K	CHIP C 470PF K	
C947			C93-0564-05	CHIP C 22PF J	
C948			CK73FB1H103K	CHIP C 0.010UF K	
C949,950			CM73F2H330J	CHIP C 33PF J	
C952,953			CK73FB1H471K	CHIP C 470PF K	
C955			CE04EW1E100M	ELECTRO 10UF 25WV	
C956			CK73FB1H103K	CHIP C 0.010UF K	
C958			CK73FB1E104K	CHIP C 0.10UF K	
C959			CE04NW1E470M	ELECTRO 47UF 25WV	
C960,961			CM73F2H390J	CHIP C 39PF J	
C962			CK73FB1H471K	CHIP C 470PF K	
C963			CK73FB1H103K	CHIP C 0.010UF K	
C964			CM73F2H040D	CHIP C 4.0PF D	
C965			CE04EW1E100M	ELECTRO 10UF 25WV	
C966			CK73FB1H103K	CHIP C 0.010UF K	
C967			CK73FB1H471K	CHIP C 470PF K	
C968			C93-0599-05	CHIP C 470PF K	
C969			CK73FB1H471K	CHIP C 470PF K	
C970			CK73FB1H103K	CHIP C 0.010UF K	
C971			CK73FB1H471K	CHIP C 470PF K	
C973,974			CK73FB1H471K	CHIP C 470PF K	
C976			CK73FB1H471K	CHIP C 470PF K	
C977			C93-0599-05	CHIP C 470PF K	
C978			C93-0559-05	CHIP C 9.0PF D	
C980			C93-0555-05	CHIP C 5.0PF C	
C981			CC73FCH1H471J	CHIP C 470PF J	
C982			CM73F2H120J	CHIP C 12PF J	
C983			C93-0553-05	CHIP C 3.0PF C	
C985			C93-0566-05	CHIP C 33PF J	
C987			C93-0562-05	CHIP C 15PF J	
C989-991			CC73FCH1H101J	CHIP C 100PF J	
C992			CM73F2H240J	CHIP C 24PF J	
C993			C93-0558-05	CHIP C 8.0PF D	
C994			CM73F2H060D	CHIP C 6.0PF D	
C995			C93-0566-05	CHIP C 33PF J	
TC101,102			C05-0309-05	CERAMIC TRIMMER CAP (40P)	
TC901			C05-0030-15	CERAMIC TRIMMER CAP (20P)	
CN1,2			E04-0154-05	PIN SOCKET	
CN3			E23-0996-05	TEST TERMINAL	
CN4			E04-0154-05	PIN SOCKET	
CN5			E40-3240-05	PIN ASSY	
CN8			E40-3237-05	PIN ASSY	
CN9		*	E40-6078-05	FLAT CABLE CONNECTOR	
CN10			E40-5764-05	FLAT CABLE CONNECTOR	
CN11,12			E23-0996-05	TEST TERMINAL	
CN14			E23-0996-05	TEST TERMINAL	
CN15			E40-3256-05	PIN ASSY	
CN16			E40-3254-05	PIN ASSY	
CN17			E23-0996-05	TEST TERMINAL	
CN22			E40-3246-05	PIN ASSY	
CN27			E40-3238-05	PIN ASSY	
CN102,103			E23-0996-05	TEST TERMINAL	
CN203,204			E23-1116-05	RELAY TERMINAL	
CN801,802			E04-0154-05	PIN SOCKET	
CN901			E04-0190-05	PIN SOCKET	
CN902			E40-5765-05	FLAT CABLE CONNECTOR	
CN903,904			E23-1116-05	RELAY TERMINAL	

Ref. No.	Address	New parts	Parts No.	Description	Destination
CN905			E04-0190-05	PIN SOCKET	
CN906			E23-0486-05	TERMINAL	
CN907-909			E23-0996-05	TEST TERMINAL	
W1		*	E37-0975-15	LEAD WIRE WITH TERMINAL	
F1			F53-0093-05	FUSE	
F2			F06-4027-05	FUSE (BLADE) 4A/32V	
CN6,7			J13-0410-05	FUSE HOLDER	
-			L92-0105-05	TROIDAL CORE	
-		*	L92-0412-05	TROIDAL CORE	E,E2
L1			L40-4705-34	SMALL FIXED INDUCTOR (47UH)	
L2			L40-1095-34	SMALL FIXED INDUCTOR (1UH)	
L3			L33-0699-05	CHOKE COIL	
L4			L40-4705-34	SMALL FIXED INDUCTOR (47UH)	
L5			L39-1255-05	TOROIDAL COIL	
L6			L33-0699-05	CHOKE COIL	
L7		*	L39-1452-05	TOROIDAL COIL	
L8			L92-0131-05	FERRITE CHIP	
L9,10			L33-0699-05	CHOKE COIL	
L11		*	L39-1434-05	TOROIDAL COIL	
L13		*	L39-1434-05	TOROIDAL COIL	
L14-16			L33-0699-05	CHOKE COIL	
L17		*	L39-1451-05	TOROIDAL COIL	
L18		*	L39-1437-05	TOROIDAL COIL	
L21			L34-1231-15	AIR-CORE COIL	
L23			L40-4795-34	SMALL FIXED INDUCTOR (4.7UH)	
L24			L33-0617-15	CHOKE COIL	
L25			L33-0651-05	CHOKE COIL	
L26			L40-4795-34	SMALL FIXED INDUCTOR (4.7UH)	
L27		*	L39-1450-05	TOROIDAL COIL	
L29		*	L39-1450-05	TOROIDAL COIL	
L30-33			L92-0149-05	FERRITE CHIP	
L101,102			L34-0895-05	AIR-CORE COIL	
L103,104			L34-1058-05	AIR-CORE COIL	
L105,106			L34-1177-05	AIR-CORE COIL	
L107,108			L34-0908-05	AIR-CORE COIL	
L109			L34-1359-05	AIR-CORE COIL	
L111,112			L40-1095-34	SMALL FIXED INDUCTOR (1UH)	
L114			L92-0149-05	FERRITE CHIP	
L115		*	L34-4652-05	AIR-CORE COIL	
L116		*	L34-4656-05	AIR-CORE COIL	
L117			L34-1185-05	AIR-CORE COIL	
L118		*	L34-4652-05	AIR-CORE COIL	
L119		*	L34-4653-05	AIR-CORE COIL	
L120			L34-4402-05	AIR-CORE COIL	
L121,122			L34-0452-05	AIR-CORE COIL	
L124,125			L92-0149-05	FERRITE CHIP	
L126		*	L34-4658-05	AIR-CORE COIL	
L127			L92-0149-05	FERRITE CHIP	
L201,202			L40-4705-34	SMALL FIXED INDUCTOR (47UH)	
L205			L40-1001-12	SMALL FIXED INDUCTOR	
L206,207			L40-1005-34	SMALL FIXED INDUCTOR (10UH)	
L208			L40-4705-34	SMALL FIXED INDUCTOR (47UH)	
L209			L40-1001-12	SMALL FIXED INDUCTOR	
L210			L40-1095-34	SMALL FIXED INDUCTOR (1UH)	
L211			L92-0131-05	FERRITE CHIP	
L501,502			L39-0421-04	COIL	
L801			L40-1001-12	SMALL FIXED INDUCTOR	
L802,803		*	L39-1441-05	TOROIDAL COIL	

K : TS-2000 (K) **KX : TS-2000X (K)**
E : TS-2000 (E) **E2 : TS-2000 (E2)**

PARTS LIST

FINAL UNIT (X45-360X-XX)

Ref. No.	Address	New parts	Parts No.	Description	Destination
L804		*	L39-1440-05	TOROIDAL COIL	
L805-807			L40-4705-34	SMALL FIXED INDUCTOR (47UH)	
L808		*	L34-4633-05	AIR-CORE COIL	
L809-811			L40-4705-34	SMALL FIXED INDUCTOR (47UH)	
L812		*	L34-4630-05	AIR-CORE COIL	
L813-815			L40-4705-34	SMALL FIXED INDUCTOR (47UH)	
L816			L34-4490-05	AIR-CORE COIL	
L817-819			L40-4705-34	SMALL FIXED INDUCTOR (47UH)	
L820			L34-4490-05	AIR-CORE COIL	
L821-823			L40-4705-34	SMALL FIXED INDUCTOR (47UH)	
L824		*	L34-4629-05	AIR-CORE COIL	
L825-827			L40-4705-34	SMALL FIXED INDUCTOR (47UH)	
L828			L34-4490-05	AIR-CORE COIL	
L829-831			L40-4705-34	SMALL FIXED INDUCTOR (47UH)	
L832			L34-4490-05	AIR-CORE COIL	
L833-835			L40-4705-34	SMALL FIXED INDUCTOR (47UH)	
L852,853		*	L39-1441-05	TOROIDAL COIL	
L854		*	L39-1440-05	TOROIDAL COIL	
L855			L34-1177-05	AIR-CORE COIL	
L901			L40-1085-34	SMALL FIXED INDUCTOR (100NH)	
L902			L92-0149-05	FERRITE CHIP	
L903			L40-1095-34	SMALL FIXED INDUCTOR (1UH)	
L904			L92-0149-05	FERRITE CHIP	
L905			L34-0895-05	AIR-CORE COIL	
L906			L34-0742-05	AIR-CORE COIL	
L907			L92-0149-05	FERRITE CHIP	
L909			L34-0742-05	AIR-CORE COIL	
L910			L34-1185-05	AIR-CORE COIL	
L911			L40-1085-34	SMALL FIXED INDUCTOR (100NH)	
L912			L34-0742-05	AIR-CORE COIL	
L913			L92-0149-05	FERRITE CHIP	
L915			L34-1232-15	AIR-CORE COIL	
L916			L34-1231-15	AIR-CORE COIL	
L917			L34-1239-05	AIR-CORE COIL	
L918,919			L34-1185-05	AIR-CORE COIL	
L921,922			L34-1185-05	AIR-CORE COIL	
L923			L34-4617-15	AIR-CORE COIL	
L924			L34-1239-05	AIR-CORE COIL	
L926			L40-2275-34	SMALL FIXED INDUCTOR (22NH)	
L927-931			L40-1085-34	SMALL FIXED INDUCTOR (100NH)	
L932			L34-4617-15	AIR-CORE COIL	
CN803,804			R92-1061-05	JUMPER REST 0 OHM	
R1,2			RK73FB2A101J	CHIP R 100 J 1/10W	
R3			RK73FB2A150J	CHIP R 15 J 1/10W	
R4			RK73FB2A681J	CHIP R 680 J 1/10W	
R5			RK73FB2A332J	CHIP R 3.3K J 1/10W	
R6			RK73FB2A681J	CHIP R 680 J 1/10W	
R7			RK73FB2A152J	CHIP R 1.5K J 1/10W	
R8			RK73FB2A471J	CHIP R 470 J 1/10W	
R9			RK73FB2A100J	CHIP R 10 J 1/10W	
R10			R92-0670-05	CHIP R 0 OHM	
R11			RK73FB2A221J	CHIP R 220 J 1/10W	
R12			RK73FB2A391J	CHIP R 390 J 1/10W	
R13			RK73FB2A471J	CHIP R 470 J 1/10W	
R14			R92-2021-05	CHIP R 2.2 J 1/2W	
R15			RK73EB2B221J	CHIP R 220 J 1/8W	
R16-19			RK73FB2A1R0J	CHIP R 1.0 J 1/10W	
R20,21			RK73FB2A470J	CHIP R 47 J 1/10W	
R24			R92-1213-05	CHIP R 100 J 1/2W	

Ref. No.	Address	New parts	Parts No.	Description	Destination
R25			RK73FB2A820J	CHIP R 82 J 1/10W	
R26			RK73FB2A270J	CHIP R 27 J 1/10W	
R27			R92-2018-05	CHIP R 560 J 1/2W	
R30			R92-1318-05	CHIP R 100 J 1W	
R31,32		*	R92-2673-05	RESISTOR 1.0	
R33,34		*	R92-3511-05	RESISTOR 8.2	
R35-40		*	RK73EB2E1R0J	CHIP R 1.0 J 1/4W	
R41,42			R92-1240-05	CHIP R 10 J 1/4W	
R43			RK73FB2A331J	CHIP R 330 J 1/10W	
R44			RS14DB3A4R7J	FL-PROOF RS 4.7 J 1W	
R45,46			RS14DB3D390J	FL-PROOF RS 39 J 2W	
R101			R92-1318-05	CHIP R 100 J 1W	
R102			RS14DB3A100J	FL-PROOF RS 10 J 1W	
R103			RS14DB3F101J	FL-PROOF RS 100 J 3W	
R106			R92-1213-05	CHIP R 100 J 1/2W	
R107			R92-1212-05	CHIP R 27 J 1/2W	
R108			RK73FB2A100J	CHIP R 10 J 1/10W	
R109			RK73FB2A331J	CHIP R 330 J 1/10W	
R110			RK73FB2A561J	CHIP R 560 J 1/10W	
R111			R92-2559-05	RESISTOR 12	
R201			RK73FB2A472J	CHIP R 4.7K J 1/10W	
R202			R92-2536-05	CHIP R 2.2 J 1/4W	
R203			RK73FB2A472J	CHIP R 4.7K J 1/10W	
R204			R92-1259-05	CHIP R 18 J 1/2W	
R205			RK73FB2A102J	CHIP R 1.0K J 1/10W	
R206			RK73FB2A100J	CHIP R 10 J 1/10W	K,KX
R207			RK73FB2A333J	CHIP R 33K J 1/10W	
R208			RK73FB2A102J	CHIP R 1.0K J 1/10W	
R209-212			RK73FB2A101J	CHIP R 100 J 1/10W	
R213			R92-2021-05	CHIP R 2.2 J 1/2W	
R214			R92-0679-05	CHIP R 0 OHM	
R216,217			R92-0670-05	CHIP R 0 OHM	
R218			RK73FB2A101J	CHIP R 100 J 1/10W	
R219			RK73FB2A681J	CHIP R 680 J 1/10W	
R220			RK73FB2A100J	CHIP R 10 J 1/10W	
R221		*	RK73FB2A4R7J	CHIP R 4.7 J 1/10W	
R222			R92-0679-05	CHIP R 0 OHM	
R501,502			RS14DB3F820J	FL-PROOF RS 82 J 3W	
R901			RK73FB2A563J	CHIP R 56K J 1/10W	
R902			R92-0670-05	CHIP R 0 OHM	
R903			RK73FB2A470J	CHIP R 47 J 1/10W	
R904			RK73FB2A274J	CHIP R 270K J 1/10W	
R906			R92-0670-05	CHIP R 0 OHM	
R907			RK73FB2A332J	CHIP R 3.3K J 1/10W	
R908			R92-0670-05	CHIP R 0 OHM	
R909			RK73FB2A470J	CHIP R 47 J 1/10W	
R910			RK73FB2A183J	CHIP R 18K J 1/10W	
R911			RK73FB2A221J	CHIP R 220 J 1/10W	
R912			R92-1221-05	CHIP R 82 J 1/4W	
R913			RK73FB2A391J	CHIP R 390 J 1/10W	
R914			R92-1261-05	CHIP R 150 J 1/2W	
R915			R92-1253-05	CHIP R 82 J 1/2W	
R916,917			RK73FB2A681J	CHIP R 680 J 1/10W	
R918			R92-1253-05	CHIP R 82 J 1/2W	
R919-922			RK73FB2A183J	CHIP R 18K J 1/10W	
R923,924			RK73FB2A220J	CHIP R 22 J 1/10W	
R925			RK73FB2A390J	CHIP R 39 J 1/10W	
R928			R92-0679-05	CHIP R 0 OHM	
VR1			R12-6730-05	TRIMMING POT. (220)	
VR2			R12-6737-05	TRIMMING POT. (3.3K)	

K : TS-2000 (K) **KX : TS-2000X (K)**
E : TS-2000 (E) **E2 : TS-2000 (E2)**

PARTS LIST

FINAL UNIT (X45-360X-XX)
FILTER UNIT (X51-315X-XX)

Ref. No.	Address	New parts	Parts No.	Description	Desti-nation
VR102			R12-6737-05	TRIMMING POT. (3.3K)	
VR901			R12-6730-05	TRIMMING POT. (220)	
VR902			R12-6737-05	TRIMMING POT. (3.3K)	
K1		*	S76-0424-05	RELAY	
K201		*	S76-0429-05	RELAY	
K801,802			S76-0419-05	RELAY	
K803			S76-0415-05	RELAY	
K804,805			S76-0419-05	RELAY	
K806			S76-0415-05	RELAY	
K807,808			S76-0419-05	RELAY	
K809			S76-0415-05	RELAY	
K810,811			S76-0419-05	RELAY	
K812			S76-0415-05	RELAY	
K813,814			S76-0419-05	RELAY	
K815			S76-0415-05	RELAY	
K816,817			S76-0419-05	RELAY	
K818			S76-0415-05	RELAY	
K819,820			S76-0419-05	RELAY	
K821			S76-0415-05	RELAY	
K822,823			S76-0419-05	RELAY	
K824			S76-0415-05	RELAY	
D1			DAN235E	DIODE	
D2		*	MA2C029W-B	VARISTOR	
D3			1SS355	DIODE	
D5			DAN202K	DIODE	
D6			1SS355	DIODE	
D7,8			MA27-B	VARISTOR	
D101,102			MA742	DIODE	
D103,104			MA27-B	VARISTOR	
D201		*	ZSH5MA27	SURGE ABSORBER	
D202			1SS355	DIODE	
D203			02CZ18(X)	ZENER DIODE	
D204			1SS355	DIODE	
D206-209			DAP202U	DIODE	
D210			1SS355	DIODE	
D801-824			1SS355	DIODE	
D901-903			MA27-B	VARISTOR	
D904,905			HSM88ASR	DIODE	
D906			MA4PH633	DIODE	
D908			XB15A709	DIODE	
D909			HVU131	DIODE	
IC201			TA7808F	IC	
IC202			TA7808S	IC	
IC203			BA10T	IC	
IC204			TA7805F	IC	
IC205			BU2099FV	IC	
IC801-803			UPD6345GS	IC	
Q1			2SK2596	FET	
Q2			2SC1971	TRANSISTOR	
Q3,4			2SC1972	TRANSISTOR	
Q6,7		*	2SC5125	TRANSISTOR	
Q8			2SC3421(Y)	TRANSISTOR	
Q101,102			2SC2694	TRANSISTOR	
Q103			2SC3421(Y)	TRANSISTOR	
Q201			FMC2	DIGITAL TRANSISTOR	
Q202,203			DTA143EKA	DIGITAL TRANSISTOR	
Q204,205			DTD123EK	DIGITAL TRANSISTOR	
Q206			DTC114EKA	DIGITAL TRANSISTOR	
Q207		*	DTC143TKA	DIGITAL TRANSISTOR	
Q208-210			DTB143EK	DIGITAL TRANSISTOR	E,E2
Q208-215			DTB143EK	DIGITAL TRANSISTOR	K,KX
Q212-215			DTB143EK	DIGITAL TRANSISTOR	E,E2
Q216,217			FMC2	DIGITAL TRANSISTOR	
Q901			2SK2596	FET	
Q902			2SK2595	FET	
Q903			2SC3022	TRANSISTOR	
Q904			2SC3421(Y)	TRANSISTOR	
Q905			2SC3102	TRANSISTOR	
TH201			5TP-41S	THERMISTOR	
TH901		*	157-153-53002	THERMISTOR	
-			212-1021-05	INSULATING TUBE	

FILTER UNIT (X51-315X-XX) 0-00 : K,KX 2-71 : E,E2

Ref. No.	Address	New parts	Parts No.	Description			Desti-nation
C2			C93-0553-05	CHIP C	3.0PF	C	
C3			C93-0562-05	CHIP C	15PF	J	
C5			CK73FB1H103K	CHIP C	0.010UF	K	
C7			CK73FB1H102K	CHIP C	1000PF	K	
C8			CC73FCH1H680J	CHIP C	68PF	J	
C9			C93-0553-05	CHIP C	3.0PF	C	
C10			CC73FCH1H560J	CHIP C	56PF	J	
C11			CK73FB1H102K	CHIP C	1000PF	K	
C12-14			CK73FB1H103K	CHIP C	0.010UF	K	
C15,16			CC73FCH1H470J	CHIP C	47PF	J	
C17-26			CK73FB1H103K	CHIP C	0.010UF	K	
C27			CK73FB1H102K	CHIP C	1000PF	K	
C28,29			CK73FB1E104K	CHIP C	0.10UF	K	
C30			CE04EW1E470M	ELECTRO	47UF	25WV	
C31,32			CK73FB1H103K	CHIP C	0.010UF	K	
C34			C93-0562-05	CHIP C	15PF	J	
C35			C93-0565-05	CHIP C	27PF	J	
C36			CK73FB1H103K	CHIP C	0.010UF	K	
C37			C93-0556-05	CHIP C	6.0PF	D	
C201			CM73F2H102J	CHIP C	1000PF	J	
C202			CM73F2H561J	CHIP C	560PF	J	
C203			CM73F2H102J	CHIP C	1000PF	J	
C204			CM73F2H821J	CHIP C	820PF	J	
C205		*	C93-0573-05	CHIP C	120PF	J	
C206			CM73F2H102J	CHIP C	1000PF	J	
C207			CK73FB1H103K	CHIP C	0.010UF	K	
C208,209			C93-0570-05	CHIP C	68PF	J	
C251			CM73F2H561J	CHIP C	560PF	J	
C252		*	C93-0573-05	CHIP C	120PF	J	
C253			CM73F2H102J	CHIP C	1000PF	J	
C255			C93-0573-05	CHIP C	120PF	J	
C256			CM73F2H561J	CHIP C	560PF	J	
C258			CK73FB1H103K	CHIP C	0.010UF	K	
C261			C93-0565-05	CHIP C	27PF	J	
C262,263		*	C93-0573-05	CHIP C	120PF	J	
C301,302			C93-0572-05	CHIP C	100PF	J	
C303,304			CM73F2H471J	CHIP C	470PF	J	
C305			C93-0564-05	CHIP C	22PF	J	
C306			CM73F2H331J	CHIP C	330PF	J	
C307			CK73FB1H103K	CHIP C	0.010UF	K	
C308			CM73F2H271J	CHIP C	270PF	J	
C311			CM73F2H331J	CHIP C	330PF	J	
C351			C93-0571-05	CHIP C	82PF	J	E,E2
C353			C93-0568-05	CHIP C	47PF	J	E,E2
C355			CM73F2H471J	CHIP C	470PF	J	E,E2

K : TS-2000 (K) **KX : TS-2000X (K)**
E : TS-2000 (E) **E2 : TS-2000 (E2)**

PARTS LIST

FILTER UNIT (X51-315X-XX)

Ref. No.	Address	New parts	Parts No.	Description	Destination
C356			C93-0572-05	CHIP C 100PF J	E,E2
C357		*	C93-0573-05	CHIP C 120PF J	E,E2
C358			CK73FB1H103K	CHIP C 0.010UF K	E,E2
C360			CK73FB1H103K	CHIP C 0.010UF K	
C362		*	C93-0573-05	CHIP C 120PF J	E,E2
C401,402		*	C93-0573-05	CHIP C 120PF J	
C403			C93-0569-05	CHIP C 56PF J	E,E2
C403			C93-0572-05	CHIP C 100PF J	K,KX
C404,405		*	C93-0573-05	CHIP C 120PF J	
C406			C93-0565-05	CHIP C 27PF J	E,E2
C406			C93-0567-05	CHIP C 39PF J	K,KX
C407			C93-0566-05	CHIP C 33PF J	K,KX
C407			C93-0571-05	CHIP C 82PF J	E,E2
C408			CK73FB1H103K	CHIP C 0.010UF K	
C411			C93-0560-05	CHIP C 10PF D	K,KX
C451,452			C93-0562-05	CHIP C 15PF J	
C453			C93-0572-05	CHIP C 100PF J	
C454			C93-0571-05	CHIP C 82PF J	
C455			C93-0566-05	CHIP C 33PF J	
C456			C93-0571-05	CHIP C 82PF J	
C457			CK73FB1H103K	CHIP C 0.010UF K	
C458			C93-0552-05	CHIP C 2.0PF C	
C501			C93-0571-05	CHIP C 82PF J	
C502			C93-0569-05	CHIP C 56PF J	
C503			C93-0571-05	CHIP C 82PF J	
C504			C93-0572-05	CHIP C 100PF J	
C505			C93-0562-05	CHIP C 15PF J	
C506			C93-0570-05	CHIP C 68PF J	
C507			CK73FB1H103K	CHIP C 0.010UF K	
C508			C93-0555-05	CHIP C 5.0PF C	
C509			C93-0552-05	CHIP C 2.0PF C	
C551			C93-0558-05	CHIP C 8.0PF D	
C553			C93-0568-05	CHIP C 47PF J	
C554			C93-0559-05	CHIP C 9.0PF D	
C555			C93-0569-05	CHIP C 56PF J	
C557			C93-0562-05	CHIP C 15PF J	
C558			C93-0563-05	CHIP C 18PF J	
C559,560			CK73FB1H103K	CHIP C 0.010UF K	
C561			C93-0558-05	CHIP C 8.0PF D	
C562			C93-0554-05	CHIP C 4.0PF C	
C563			C93-0553-05	CHIP C 3.0PF C	
C601			C93-0555-05	CHIP C 5.0PF C	
TC1			C05-0031-15	CERAMIC TRIMMER CAP (10P)	
CN2,3			E23-0996-05	TEST TERMINAL	
CN4			E04-0154-05	PIN SOCKET	
CN5-8			E23-0996-05	TEST TERMINAL	
CN9			E40-3256-05	PIN ASSY	
CN10			E40-3254-05	PIN ASSY	
CN12,13			E04-0154-05	PIN SOCKET	
CN20			E04-0154-05	PIN SOCKET	
CN21			E04-0190-05	PIN SOCKET	
-			L92-0104-05	TROIDAL CORE	
-			L92-0107-05	TROIDAL CORE	
-			L92-0108-05	TROIDAL CORE	
L2,3			L34-1232-15	AIR-CORE COIL	
L4			L40-1095-34	SMALL FIXED INDUCTOR (1UH)	
L5			L34-1088-05	AIR-CORE COIL	
L6			L40-1021-12	SMALL FIXED INDUCTOR	
L7			L39-0480-15	TOROIDAL COIL	

Ref. No.	Address	New parts	Parts No.	Description	Destination
L8			L40-1021-12	SMALL FIXED INDUCTOR	
L9		*	L39-1442-05	TOROIDAL COIL	
L10		*	L39-1443-05	TOROIDAL COIL	
L11,12			L40-4705-34	SMALL FIXED INDUCTOR (47UH)	
L13			L40-1885-48	SMALL FIXED INDUCTOR (180NH)	
L14,15			L40-4705-34	SMALL FIXED INDUCTOR (47UH)	
L201			L40-4705-34	SMALL FIXED INDUCTOR (47UH)	
L202		*	L39-1259-05	TOROIDAL COIL	
L203			L39-1260-05	TOROIDAL COIL	
L251			L40-4705-34	SMALL FIXED INDUCTOR (47UH)	
L252			L39-1405-05	TOROIDAL COIL	
L253			L39-1225-05	TOROIDAL COIL	
L301			L40-4705-34	SMALL FIXED INDUCTOR (47UH)	
L302,303			L39-1457-05	TOROIDAL COIL	
L351			L40-4705-34	SMALL FIXED INDUCTOR (47UH)	E,E2
L352,353			L39-1221-05	TOROIDAL COIL	E,E2
L401			L40-4705-34	SMALL FIXED INDUCTOR (47UH)	
L402-404		*	L39-1456-05	TOROIDAL COIL	
L451			L40-4705-34	SMALL FIXED INDUCTOR (47UH)	
L452,453			L34-1279-05	AIR-CORE COIL	
L501			L40-4705-34	SMALL FIXED INDUCTOR (47UH)	
L502		*	L34-4661-05	AIR-CORE COIL	
L503			L34-1282-05	AIR-CORE COIL	
L551			L40-4705-34	SMALL FIXED INDUCTOR (47UH)	
L552		*	L34-4662-05	AIR-CORE COIL	
L553			L34-4491-05	AIR-CORE COIL	
L554			L34-1359-05	AIR-CORE COIL	
R2,3			R92-1205-05	CHIP R 120 J 1/4W	
R5			RK73FB2A100J	CHIP R 10 J 1/10W	
R6			R92-0686-05	CHIP R 33 J 1/2W	
R7			R92-1212-05	CHIP R 27 J 1/2W	
R8			R92-1316-05	CHIP R 39 J 1W	
R9,10			RK73FB2A101J	CHIP R 100 J 1/10W	
R11-14			RK73FB2A104J	CHIP R 100K J 1/10W	
R15,16			RK73FB2A102J	CHIP R 1.0K J 1/10W	
R17,18			RK73FB2A101J	CHIP R 100 J 1/10W	
R19,20			RK73FB2A104J	CHIP R 100K J 1/10W	
R21,22			RK73FB2A103J	CHIP R 10K J 1/10W	
R23,24			RK73FB2A152J	CHIP R 1.5K J 1/10W	
R25,26			RK73FB2A102J	CHIP R 1.0K J 1/10W	
R27,28			RK73FB2A332J	CHIP R 3.3K J 1/10W	
R29,30			RK73FB2A151J	CHIP R 150 J 1/10W	
R31,32			RK73FB2A122J	CHIP R 1.2K J 1/10W	
R33			RK73FB2A103J	CHIP R 10K J 1/10W	
R34			RK73FB2A332J	CHIP R 3.3K J 1/10W	
R35			RK73FB2A103J	CHIP R 10K J 1/10W	
R36			RK73FB2A332J	CHIP R 3.3K J 1/10W	
R37,38			RK73FB2A103J	CHIP R 10K J 1/10W	
R39			RK73FB2A101J	CHIP R 100 J 1/10W	
R40			RK73FB2A333J	CHIP R 33K J 1/10W	
VR1			R12-6730-05	TRIMMING POT. (220)	
VR2			R12-6742-05	TRIMMING POT. (22K)	
K1			S51-1429-05	RELAY	
K2		*	S76-0430-05	RELAY	
K3,4		*	S76-0424-05	RELAY	
K201,202		*	S76-0423-05	RELAY	
K251,252		*	S76-0423-05	RELAY	
K301,302		*	S76-0423-05	RELAY	
K351,352		*	S76-0423-05	RELAY	E,E2

K : TS-2000 (K) **KX : TS-2000X (K)**
E : TS-2000 (E) **E2 : TS-2000 (E2)**

PARTS LIST

FILTER UNIT (X51-315X-XX)
CONTROL UNIT (X53-391X-XX)

Ref. No.	Address	New parts	Parts No.	Description	Destination
K401,402		*	S76-0423-05	RELAY	
K451,452		*	S76-0423-05	RELAY	
K501,502			S51-1420-05	RELAY	
K551,552			S51-1420-05	RELAY	
D2			1SS355	DIODE	
D3,4			1SS348	DIODE	
D5-7			1SS355	DIODE	
D8,9			DSA301LA	DIODE	
D10,11			HSM88AS	DIODE	
D201			1SS355	DIODE	
D251			1SS355	DIODE	
D301			1SS355	DIODE	
D351			1SS355	DIODE	E,E2
D401			1SS355	DIODE	
D451			1SS355	DIODE	
D501			1SS355	DIODE	
D551			1SS355	DIODE	
IC1			TA75S393F	IC	
IC2			TC7WH74FU	IC (D FLIP FLOP)	
Q1,2			2SK208(GR)	FET	
Q3,4			FMW1	TRANSISTOR	

CONTROL UNIT (X53-391X-XX)
0-11 : K,KX 2-71 : E 2-72 : E2

Ref. No.	Address	New parts	Parts No.	Description			Destination
C1-7			CK73GB1H102K	CHIP C	1000PF	K	
C8-11			CK73GB1C104K	CHIP C	0.10UF	K	
C12-15			CC73GCH1H101J	CHIP C	100PF	J	
C16,17			CK73GB1C104K	CHIP C	0.10UF	K	
C18			CK73GB1H103K	CHIP C	0.010UF	K	
C19			C92-0562-05	ELECTRO	330UF	6.3WV	
C20,21			CK73GB1C104K	CHIP C	0.10UF	K	
C22			CK73GB1H103K	CHIP C	0.010UF	K	
C23,24			CK73GB1C104K	CHIP C	0.10UF	K	
C25			CK73GB1H103K	CHIP C	0.010UF	K	
C26			C92-0041-05	CHIP-ELE	10UF	10WV	
C27			C92-0566-05	CHIP-TAN	10UF	6.3WV	
C28-33			CK73GB1H103K	CHIP C	0.010UF	K	
C34,35			CC73GCH1H100D	CHIP C	10PF	D	
C36-44			CK73GB1H103K	CHIP C	0.010UF	K	
C45-48			CK73GB1H102K	CHIP C	1000PF	K	
C49			CK73GB1C104K	CHIP C	0.10UF	K	
C50-62			CK73GB1H102K	CHIP C	1000PF	K	
C64			CK73GB1C104K	CHIP C	0.10UF	K	
C66-79			CK73GB1H103K	CHIP C	0.010UF	K	
C80-83			CK73GB1H102K	CHIP C	1000PF	K	
C84-86			CC73GCH1H101J	CHIP C	100PF	J	
C87-91			CK73GB1H102K	CHIP C	1000PF	K	
C92			CC73GCH1H101J	CHIP C	100PF	J	
C93,94			CK73GB1H102K	CHIP C	1000PF	K	
C95-98			CC73GCH1H101J	CHIP C	100PF	J	
C99,100			CK73GB1H102K	CHIP C	1000PF	K	
C101-110			CC73GCH1H101J	CHIP C	100PF	J	
C111			CK73GB1H103K	CHIP C	0.010UF	K	
C112-127			CK73GB1H102K	CHIP C	1000PF	K	
C128-139			CC73GCH1H101J	CHIP C	100PF	J	
C140-143			CK73GB1H102K	CHIP C	1000PF	K	
C145			CK73GB1C104K	CHIP C	0.10UF	K	
C147,148			CC73GCH1H160J	CHIP C	16PF	J	
C149			CK73GB1C104K	CHIP C	0.10UF	K	
C150			CK73GB1H103K	CHIP C	0.010UF	K	
C151			CK73GB1C104K	CHIP C	0.10UF	K	
C152			CK73FB1A105K	CHIP C	1.0UF	K	
C153,154			CK73GB1C104K	CHIP C	0.10UF	K	
C155			CK73GB1E223K	CHIP C	0.022UF	K	
C156			CC73GCH1H221J	CHIP C	220PF	J	
C157			CK73GB1H222K	CHIP C	2200PF	K	
C158			CK73GB1C104K	CHIP C	0.10UF	K	
C159			CK73GB1H682K	CHIP C	6800PF	K	
C160			CK73GB1E223K	CHIP C	0.022UF	K	
C161			CK73GB1H102K	CHIP C	1000PF	K	
C162			CK73GB1H103K	CHIP C	0.010UF	K	
C163			CK73GB1H682K	CHIP C	6800PF	K	
C164			CK73GB1E223K	CHIP C	0.022UF	K	
C165			CK73GB1H682K	CHIP C	6800PF	K	
C166			CK73GB1H471K	CHIP C	470PF	K	
C167			CC73GCH1H101J	CHIP C	100PF	J	
C168			CK73GB1H472K	CHIP C	4700PF	K	
C169			CK73GB1H103K	CHIP C	0.010UF	K	
C170			CK73GB1H471K	CHIP C	470PF	K	
C171			CK73GB1C104K	CHIP C	0.10UF	K	
C172,173			CK73FB1A105K	CHIP C	1.0UF	K	
C174			CK73GB1H103K	CHIP C	0.010UF	K	
C175			CK73GB1C473K	CHIP C	0.047UF	K	
C176,177			CK73GB1C104K	CHIP C	0.10UF	K	
C178,179			CK73GB1H102K	CHIP C	1000PF	K	
C180			C92-0523-05	CHIP-ELE	10UF	16WV	
C181			CK73GB1C473K	CHIP C	0.047UF	K	
C182,183			CK73GB1C104K	CHIP C	0.10UF	K	
C185			CK73FB1A105K	CHIP C	1.0UF	K	
C186			CK73GB1C104K	CHIP C	0.10UF	K	
C187			CK73GB1H102K	CHIP C	1000PF	K	
C188			CK73GB1C104K	CHIP C	0.10UF	K	
C501,502			CK73GB1C104K	CHIP C	0.10UF	K	
C503			C92-0048-05	ELECTRO	100UF	6.3WV	
C504-507			CK73GB1H103K	CHIP C	0.010UF	K	
C508			C92-0048-05	ELECTRO	100UF	6.3WV	
C509-519			CK73GB1H103K	CHIP C	0.010UF	K	
C520			CK73GB1C104K	CHIP C	0.10UF	K	
C521			CK73GB1H103K	CHIP C	0.010UF	K	
C522			CK73GB1C104K	CHIP C	0.10UF	K	
C523			C92-0048-05	ELECTRO	100UF	6.3WV	
C524,525			CK73GB1H103K	CHIP C	0.010UF	K	
C526			CK73GB1C104K	CHIP C	0.10UF	K	
C527			CK73GB1H103K	CHIP C	0.010UF	K	
C528,529			CK73GB1C104K	CHIP C	0.10UF	K	
C530,531			CK73GB1H103K	CHIP C	0.010UF	K	
C532			CK73GB1C104K	CHIP C	0.10UF	K	
C533,534			CC73GCH1H100D	CHIP C	10PF	D	
C535			CK73GB1C104K	CHIP C	0.10UF	K	
C536			CK73GB1H103K	CHIP C	0.010UF	K	
C537			CK73GB1C104K	CHIP C	0.10UF	K	
C538			C92-0048-05	ELECTRO	100UF	6.3WV	
C539,540			CK73GB1H103K	CHIP C	0.010UF	K	
C541			CK73GB1C104K	CHIP C	0.10UF	K	
C542			CK73GB1H103K	CHIP C	0.010UF	K	
C543,544			CK73GB1C104K	CHIP C	0.10UF	K	
C545,546			CK73GB1H103K	CHIP C	0.010UF	K	

K : TS-2000 (K) KX : TS-2000X (K)
E : TS-2000 (E) E2 : TS-2000 (E2)

PARTS LIST

CONTROL UNIT (X53-391X-XX)

Ref. No.	Address	New parts	Parts No.	Description			Destination
C547			CK73GB1C104K	CHIP C	0.10UF	K	
C548,549			CC73GCH1H100D	CHIP C	10PF	D	
C550			CK73GB1H103K	CHIP C	0.010UF	K	
C551,552			CK73GB1H102K	CHIP C	1000PF	K	
C553,554			CK73GB1C104K	CHIP C	0.10UF	K	
C555,556			C92-0041-05	CHIP-ELE	10UF	10WV	
C557,558			CK73GB1C104K	CHIP C	0.10UF	K	
C559			CC73GCH1H100D	CHIP C	10PF	D	
C560,561			CK73GB1H103K	CHIP C	0.010UF	K	
C562			CC73GCH1H100D	CHIP C	10PF	D	
C563			C92-0048-05	ELECTRO	100UF	6.3WV	
C564			CK73GB1H103K	CHIP C	0.010UF	K	
C565			C92-0566-05	CHIP-TAN	10UF	6.3WV	
C566,567			C92-0507-05	CHIP-TAN	4.7UF	6.3WV	
C568-570			CK73GB1C104K	CHIP C	0.10UF	K	
C571,572			C92-0507-05	CHIP-TAN	4.7UF	6.3WV	
C573-575			CK73GB1C104K	CHIP C	0.10UF	K	
C576,577			CK73GB1H222K	CHIP C	2200PF	K	
C578			C92-0566-05	CHIP-TAN	10UF	6.3WV	
C579,580			C92-0507-05	CHIP-TAN	4.7UF	6.3WV	
C581-583			CK73GB1C104K	CHIP C	0.10UF	K	
C584,585			C92-0507-05	CHIP-TAN	4.7UF	6.3WV	
C586-588			CK73GB1C104K	CHIP C	0.10UF	K	
C589,590			CK73GB1H222K	CHIP C	2200PF	K	
C591			CK73GB1H272K	CHIP C	2700PF	K	
C592,593			CC73GCH1H331J	CHIP C	330PF	J	
C594			CK73GB1H103K	CHIP C	0.010UF	K	
C595			C92-0566-05	CHIP-TAN	10UF	6.3WV	
C596			CK73GB1C104K	CHIP C	0.10UF	K	
C599			C92-0566-05	CHIP-TAN	10UF	6.3WV	
C600			CK73GB1H103K	CHIP C	0.010UF	K	
C601			C92-0566-05	CHIP-TAN	10UF	6.3WV	
C602			CK73GB1C104K	CHIP C	0.10UF	K	
C603			C92-0566-05	CHIP-TAN	10UF	6.3WV	
C604			CC73GCH1H151J	CHIP C	150PF	J	
C605			CK73GB1H152K	CHIP C	1500PF	K	
C606			C92-0566-05	CHIP-TAN	10UF	6.3WV	
C607			CK73GB1H103K	CHIP C	0.010UF	K	
C608			C92-0566-05	CHIP-TAN	10UF	6.3WV	
C609			CK73GB1C104K	CHIP C	0.10UF	K	
C610			C92-0566-05	CHIP-TAN	10UF	6.3WV	
C611			CK73GB1H471K	CHIP C	470PF	K	
C612			CK73GB1H472K	CHIP C	4700PF	K	
C613			CK73GB1H103K	CHIP C	0.010UF	K	
C614			CK73GB1H102K	CHIP C	1000PF	K	
C615,616			C92-0566-05	CHIP-TAN	10UF	6.3WV	
C617			CK73GB1C104K	CHIP C	0.10UF	K	
C618			C92-0566-05	CHIP-TAN	10UF	6.3WV	
C619			CK73GB1H103K	CHIP C	0.010UF	K	
C620			C92-0566-05	CHIP-TAN	10UF	6.3WV	
C621			CK73GB1C104K	CHIP C	0.10UF	K	
C622,623			C92-0566-05	CHIP-TAN	10UF	6.3WV	
C624			CK73GB1H103K	CHIP C	0.010UF	K	
C625			CK73GB1H102K	CHIP C	1000PF	K	
C626			CK73GB1H103K	CHIP C	0.010UF	K	
C627			CK73GB1H102K	CHIP C	1000PF	K	
C628,629			C92-0566-05	CHIP-TAN	10UF	6.3WV	
C630			CK73GB1H103K	CHIP C	0.010UF	K	
C631			C92-0566-05	CHIP-TAN	10UF	6.3WV	
C632			CK73GB1C104K	CHIP C	0.10UF	K	

Ref. No.	Address	New parts	Parts No.	Description			Destination
C633,634			C92-0566-05	CHIP-TAN	10UF	6.3WV	
C635			CK73GB1H103K	CHIP C	0.010UF	K	
C636			CK73GB1H102K	CHIP C	1000PF	K	
C637			CK73GB1H472K	CHIP C	4700PF	K	
C638			CK73GB1H471K	CHIP C	470PF	K	
C639-641			C92-0566-05	CHIP-TAN	10UF	6.3WV	
C642			CK73GB1C104K	CHIP C	0.10UF	K	
C643			CK73GB1H103K	CHIP C	0.010UF	K	
C644			C92-0566-05	CHIP-TAN	10UF	6.3WV	
C645			CK73GB1C104K	CHIP C	0.10UF	K	
C646,647			C92-0566-05	CHIP-TAN	10UF	6.3WV	
C648			CK73GB1H681K	CHIP C	680PF	K	
C649			CK73GB1H682K	CHIP C	6800PF	K	
C650			CK73GB1H103K	CHIP C	0.010UF	K	
C651-655			CK73GB1C104K	CHIP C	0.10UF	K	
C656,657			CK73GB1E223K	CHIP C	0.022UF	K	
C658			CK73GB1H102K	CHIP C	1000PF	K	
C659			C92-0004-05	CHIP-TAN	1.0UF	16WV	
C660-673			CK73GB1H102K	CHIP C	1000PF	K	
C674			CC73GCH1H101J	CHIP C	100PF	J	
C675-678			CK73GB1H102K	CHIP C	1000PF	K	
C700			C92-0041-05	CHIP-ELE	10UF	10WV	
C701			CK73GB1C104K	CHIP C	0.10UF	K	
C702			C92-0566-05	CHIP-TAN	10UF	6.3WV	
C703			CK73GB1C104K	CHIP C	0.10UF	K	
C704			C92-0566-05	CHIP-TAN	10UF	6.3WV	
C705			CK73FB1A105K	CHIP C	1.0UF	K	
C708			CK73FB1A105K	CHIP C	1.0UF	K	
C711-714			CK73GB1H102K	CHIP C	1000PF	K	
C715			C92-0507-05	CHIP-TAN	4.7UF	6.3WV	
C716			C92-0041-05	CHIP-ELE	10UF	10WV	
C717			CK73GB1H102K	CHIP C	1000PF	K	
C718			CC73GCH1H220J	CHIP C	22PF	J	
C719-728			CK73GB1H102K	CHIP C	1000PF	K	
CN1			E40-5762-05	FLAT CABLE CONNECTOR			
CN3			E40-3250-05	PIN ASSY			
CN4			E40-5978-05	FLAT CABLE CONNECTOR			
CN5		*	E40-6074-05	FLAT CABLE CONNECTOR			
CN6			E40-5902-05	FLAT CABLE CONNECTOR			
CN7			E40-5744-05	FLAT CABLE CONNECTOR			
CN503			E40-3251-05	PIN ASSY			
CN504			E40-5902-05	FLAT CABLE CONNECTOR			
CN505			E40-3248-05	PIN ASSY			
CN506			E40-3250-05	PIN ASSY			
L1,2			L33-0742-05	SMALL FIXED INDUCTOR			
L3,4			L92-0137-05	FERRITE CHIP			
L5-8			L40-1005-85	SMALL FIXED INDUCTOR (10U)			
L9			L92-0137-05	FERRITE CHIP			
L10,11			L33-0742-05	SMALL FIXED INDUCTOR			
L13			L40-1005-85	SMALL FIXED INDUCTOR (10U)			
L14			L33-0742-05	SMALL FIXED INDUCTOR			
L15-17			L40-1005-85	SMALL FIXED INDUCTOR (10U)			
L502			L33-0742-05	SMALL FIXED INDUCTOR			
L504-508			L40-1005-85	SMALL FIXED INDUCTOR (10U)			
X1			L77-1680-05	CRYSTAL RESONATOR (11.0592MHZ)			
X2			L78-0459-05	RESONATOR (4.19MHZ)			
X3			L77-1780-05	CRYSTAL RESONATOR (7.9872MHZ)			
X501,502			L77-1680-05	CRYSTAL RESONATOR (11.0592MHZ)			
X503			L77-1679-05	CRYSTAL RESONATOR (12.288MHZ)			

K : TS-2000 (K) **KX : TS-2000X (K)**
E : TS-2000 (E) **E2 : TS-2000 (E2)**

PARTS LIST

CONTROL UNIT (X53-391X-XX)

Ref. No.	Address	New parts	Parts No.	Description	Destination
CP1,2		*	RK75GB1J101J	CHIP-COM 100 J 1/16W	
CP3-16			RK75GB1J473J	CHIP-COM 47K J 1/16W	
CP18-33		*	RK75GB1J101J	CHIP-COM 100 J 1/16W	
CP501-503			RK75GB1J473J	CHIP-COM 47K J 1/16W	
CP504-508		*	RK75GB1J101J	CHIP-COM 100 J 1/16W	
R1,2			RK73GB1J472J	CHIP R 4.7K J 1/16W	
R3			RK73GB1J103J	CHIP R 10K J 1/16W	
R5			RK73GB1J473J	CHIP R 47K J 1/16W	
R7			R92-0686-05	CHIP R 33 J 1/2W	
R9,10			RK73GB1J473J	CHIP R 47K J 1/16W	
R11,12			RK73GB1J102J	CHIP R 1.0K J 1/16W	
R13-17			RK73GB1J473J	CHIP R 47K J 1/16W	
R19-26			RK73GB1J473J	CHIP R 47K J 1/16W	
R28			RK73GB1J101J	CHIP R 100 J 1/16W	
R45			RK73GB1J473J	CHIP R 47K J 1/16W	
R46			RK73GB1J105J	CHIP R 1.0M J 1/16W	
R47			R92-1252-05	CHIP R 0 OHM	E2
R48			R92-1252-05	CHIP R 0 OHM	E
R52-54			R92-1252-05	CHIP R 0 OHM	E,E2
R52,53			R92-1252-05	CHIP R 0 OHM	K,KX
R55-58			RK73GB1J101J	CHIP R 100 J 1/16W	
R67			RK73GB1J101J	CHIP R 100 J 1/16W	
R100			RK73GB1J101J	CHIP R 100 J 1/16W	
R101			RK73GB1J471J	CHIP R 470 J 1/16W	
R114			RK73GB1J101J	CHIP R 100 J 1/16W	
R117			RK73GB1J101J	CHIP R 100 J 1/16W	
R120			RK73GB1J104J	CHIP R 100K J 1/16W	
R121,122			R92-1252-05	CHIP R 0 OHM	
R124			RK73GB1J103J	CHIP R 10K J 1/16W	
R125			RK73GB1J102J	CHIP R 1.0K J 1/16W	
R126			RK73GB1J103J	CHIP R 10K J 1/16W	
R127			RK73GB1J472J	CHIP R 4.7K J 1/16W	
R128			RK73GB1J103J	CHIP R 10K J 1/16W	
R129			R92-1252-05	CHIP R 0 OHM	
R130			RK73GB1J103J	CHIP R 10K J 1/16W	
R131			RK73GB1J104J	CHIP R 100K J 1/16W	
R132			RK73GB1J103J	CHIP R 10K J 1/16W	
R133,134			RK73GB1J332J	CHIP R 3.3K J 1/16W	
R135,136			RK73GB1J123J	CHIP R 12K J 1/16W	
R137			RK73GB1J393J	CHIP R 39K J 1/16W	
R138			RK73GB1J103J	CHIP R 10K J 1/16W	
R139			RK73GB1J222J	CHIP R 2.2K J 1/16W	
R140			RK73GB1J823J	CHIP R 82K J 1/16W	
R141			RK73GB1J103J	CHIP R 10K J 1/16W	
R142,143			RK73GB1J123J	CHIP R 12K J 1/16W	
R144			RK73GB1J103J	CHIP R 10K J 1/16W	
R145			RK73GB1J123J	CHIP R 12K J 1/16W	
R146			RK73GB1J473J	CHIP R 47K J 1/16W	
R147			RK73GB1J683J	CHIP R 68K J 1/16W	
R148			RK73GB1J332J	CHIP R 3.3K J 1/16W	
R149			RK73GB1J104J	CHIP R 100K J 1/16W	
R150			RK73GB1J103J	CHIP R 10K J 1/16W	
R151			RK73GB1J104J	CHIP R 100K J 1/16W	
R152,153			RK73GB1J223J	CHIP R 22K J 1/16W	
R154			RK73GB1J102J	CHIP R 1.0K J 1/16W	
R155			RK73GB1J272J	CHIP R 2.7K J 1/16W	
R157			RK73GB1J104J	CHIP R 100K J 1/16W	
R158			RK73GB1J563J	CHIP R 56K J 1/16W	
R159			RK73GB1J272J	CHIP R 2.7K J 1/16W	
R160			RK73GB1J102J	CHIP R 1.0K J 1/16W	

Ref. No.	Address	New parts	Parts No.	Description	Destination
R161			RK73GB1J103J	CHIP R 10K J 1/16W	
R162,163			RK73GB1J102J	CHIP R 1.0K J 1/16W	
R164,165			RK73GB1J473J	CHIP R 47K J 1/16W	
R186-188			RK73GB1J101J	CHIP R 100 J 1/16W	
R200			R92-1252-05	CHIP R 0 OHM	
R201-204			RK73GB1J473J	CHIP R 47K J 1/16W	
R206,207			RK73GB1J473J	CHIP R 47K J 1/16W	
R209-211			RK73GB1J473J	CHIP R 47K J 1/16W	
R213			RK73GB1J104J	CHIP R 100K J 1/16W	
R214			RK73GB1J473J	CHIP R 47K J 1/16W	
R215			RK73GB1J104J	CHIP R 100K J 1/16W	
R216,217			RK73GB1J473J	CHIP R 47K J 1/16W	
R218			RK73GB1J474J	CHIP R 470K J 1/16W	
R219			RK73GB1J104J	CHIP R 100K J 1/16W	
R220			R92-1252-05	CHIP R 0 OHM	
R221,222			RK73GB1J473J	CHIP R 47K J 1/16W	
R223			RK73GB1J183J	CHIP R 18K J 1/16W	
R224			RK73GB1J103J	CHIP R 10K J 1/16W	
R225			R92-1252-05	CHIP R 0 OHM	
R226			RK73GB1J222J	CHIP R 2.2K J 1/16W	
R501,502		*	R92-2685-05	METAL GLAZE RESISTOR	
R503,504		*	R92-2686-05	METAL GLAZE RESISTOR	
R505		*	R92-2685-05	METAL GLAZE RESISTOR	
R506,507		*	R92-2686-05	METAL GLAZE RESISTOR	
R508		*	R92-2685-05	METAL GLAZE RESISTOR	
R509,510		*	R92-2686-05	METAL GLAZE RESISTOR	
R511		*	R92-2685-05	METAL GLAZE RESISTOR	
R512,513		*	R92-2686-05	METAL GLAZE RESISTOR	
R514-516		*	R92-2685-05	METAL GLAZE RESISTOR	
R517		*	R92-2686-05	METAL GLAZE RESISTOR	
R518		*	R92-2685-05	METAL GLAZE RESISTOR	
R519,520		*	R92-2686-05	METAL GLAZE RESISTOR	
R521		*	R92-2685-05	METAL GLAZE RESISTOR	
R522,523		*	R92-2686-05	METAL GLAZE RESISTOR	
R524		*	R92-2685-05	METAL GLAZE RESISTOR	
R525,526		*	R92-2686-05	METAL GLAZE RESISTOR	
R527		*	R92-2685-05	METAL GLAZE RESISTOR	
R528		*	R92-2686-05	METAL GLAZE RESISTOR	
R529-531		*	R92-2685-05	METAL GLAZE RESISTOR	
R532		*	R92-2686-05	METAL GLAZE RESISTOR	
R533-536			RK73GB1J473J	CHIP R 47K J 1/16W	
R537			R92-1252-05	CHIP R 0 OHM	
R538-540			RK73GB1J103J	CHIP R 10K J 1/16W	
R541-550			R92-1252-05	CHIP R 0 OHM	
R552,553			RK73GB1J103J	CHIP R 10K J 1/16W	
R554,555			RK73GB1J101J	CHIP R 100 J 1/16W	
R557			R92-1252-05	CHIP R 0 OHM	
R558			RK73GB1J101J	CHIP R 100 J 1/16W	
R559-561			RK73GB1J103J	CHIP R 10K J 1/16W	
R563			RK73GB1J103J	CHIP R 10K J 1/16W	
R565,566			RK73GB1J472J	CHIP R 4.7K J 1/16W	
R567			RK73GB1J474J	CHIP R 470K J 1/16W	
R568			RK73GB1J473J	CHIP R 47K J 1/16W	
R570,571			RK73GB1J103J	CHIP R 10K J 1/16W	
R572,573			RK73GB1J101J	CHIP R 100 J 1/16W	
R575			R92-1252-05	CHIP R 0 OHM	
R576			RK73GB1J101J	CHIP R 100 J 1/16W	
R577-581			RK73GB1J103J	CHIP R 10K J 1/16W	
R582,583			RK73GB1J472J	CHIP R 4.7K J 1/16W	
R584			RK73GB1J474J	CHIP R 470K J 1/16W	

K : TS-2000 (K) **KX : TS-2000X (K)**
E : TS-2000 (E) **E2 : TS-2000 (E2)**

PARTS LIST

CONTROL UNIT (X53-391X-XX)

Ref. No.	Address	New parts	Parts No.	Description	Destination
R585,586			RK73GB1J104J	CHIP R 100K J 1/16W	
R588,589			RK73GB1J103J	CHIP R 10K J 1/16W	
R590,591			RK73GB1J100J	CHIP R 10 J 1/16W	
R592			RK73GB1J103J	CHIP R 10K J 1/16W	
R593			RK73GB1J100J	CHIP R 10 J 1/16W	
R594,595			RK73GB1J103J	CHIP R 10K J 1/16W	
R596			RK73GB1J562J	CHIP R 5.6K J 1/16W	
R597			RK73GB1J103J	CHIP R 10K J 1/16W	
R598			RK73GB1J562J	CHIP R 5.6K J 1/16W	
R599			RK73GB1J103J	CHIP R 10K J 1/16W	
R600,601			RK73GB1J472J	CHIP R 4.7K J 1/16W	
R602			RK73GB1J104J	CHIP R 100K J 1/16W	
R603			RK73GB1J221J	CHIP R 220 J 1/16W	
R604			RK73GB1J103J	CHIP R 10K J 1/16W	
R605			RK73GB1J104J	CHIP R 100K J 1/16W	
R606			RK73GB1J332J	CHIP R 3.3K J 1/16W	
R607,608			RK73GB1J472J	CHIP R 4.7K J 1/16W	
R610			RK73GB1J331J	CHIP R 330 J 1/16W	
R611,612			RK73GB1J472J	CHIP R 4.7K J 1/16W	
R613,614			RK73GB1J223J	CHIP R 22K J 1/16W	
R616			RK73GB1J223J	CHIP R 22K J 1/16W	
R618			RK73GB1J331J	CHIP R 330 J 1/16W	
R619			RK73GB1J332J	CHIP R 3.3K J 1/16W	
R620,621			RK73GB1J472J	CHIP R 4.7K J 1/16W	
R623,624			RK73GB1J472J	CHIP R 4.7K J 1/16W	
R625-630			RK73GB1J223J	CHIP R 22K J 1/16W	
R631			RK73GB1J561J	CHIP R 560 J 1/16W	
R632-635			RK73GB1J472J	CHIP R 4.7K J 1/16W	
R636,637			RK73GB1J223J	CHIP R 22K J 1/16W	
R638			RK73GB1J561J	CHIP R 560 J 1/16W	
R639,640			RK73GB1J223J	CHIP R 22K J 1/16W	
R641			RK73GB1J103J	CHIP R 10K J 1/16W	
R642			RK73GB1J223J	CHIP R 22K J 1/16W	
R643			RK73GB1J221J	CHIP R 220 J 1/16W	
R644,645			RK73GB1J472J	CHIP R 4.7K J 1/16W	
R646			RK73GB1J103J	CHIP R 10K J 1/16W	
R647			RK73GB1J223J	CHIP R 22K J 1/16W	
R648			RK73GB1J221J	CHIP R 220 J 1/16W	
R649,650			RK73GB1J223J	CHIP R 22K J 1/16W	
R651			RK73GB1J472J	CHIP R 4.7K J 1/16W	
R652,653			RK73GB1J223J	CHIP R 22K J 1/16W	
R654-659			RK73GB1J472J	CHIP R 4.7K J 1/16W	
R660,661			RK73GB1J223J	CHIP R 22K J 1/16W	
R662			RK73GB1J472J	CHIP R 4.7K J 1/16W	
R663			RK73GB1J223J	CHIP R 22K J 1/16W	
R664			RK73GB1J103J	CHIP R 10K J 1/16W	
R665			RK73GB1J472J	CHIP R 4.7K J 1/16W	
R666,667			RK73GB1J222J	CHIP R 2.2K J 1/16W	
R668			RK73GB1J223J	CHIP R 22K J 1/16W	
R669,670			RK73GB1J334J	CHIP R 330K J 1/16W	
R671			RK73GB1J223J	CHIP R 22K J 1/16W	
R672,673			RK73GB1J102J	CHIP R 1.0K J 1/16W	
R674			RK73GB1J472J	CHIP R 4.7K J 1/16W	
R686-688			R92-1252-05	CHIP R 0 OHM	
R693-699			R92-1252-05	CHIP R 0 OHM	
R700			RK73GB1J473J	CHIP R 47K J 1/16W	
R701			RK73GB1J154J	CHIP R 150K J 1/16W	
R702			RK73GB1J103J	CHIP R 10K J 1/16W	
R703-706			RK73GB1J472J	CHIP R 4.7K J 1/16W	
R707-710			RK73GB1J104J	CHIP R 100K J 1/16W	

Ref. No.	Address	New parts	Parts No.	Description	Destination
R712			RK73GB1J104J	CHIP R 100K J 1/16W	
R714-716			RK73GB1J470J	CHIP R 47 J 1/16W	
R717			R92-1252-05	CHIP R 0 OHM	
R718,719			RK73GB1J473J	CHIP R 47K J 1/16W	
R720,721			RK73GB1J104J	CHIP R 100K J 1/16W	
R722,723			R92-1252-05	CHIP R 0 OHM	
R725			R92-1252-05	CHIP R 0 OHM	
R731			R92-1252-05	CHIP R 0 OHM	
R736			R92-1252-05	CHIP R 0 OHM	
R738			RK73GB1J561J	CHIP R 560 J 1/16W	
R739			RK73GB1J224J	CHIP R 220K J 1/16W	
R740			R92-0699-05	CHIP R 10 J 1/2W	
R741			RK73GB1J104J	CHIP R 100K J 1/16W	
R742,743			RK73GB1J473J	CHIP R 47K J 1/16W	
R745-747			R92-0670-05	CHIP R 0 OHM	
D5			RLS245	DIODE	
D6			MA729	DIODE	
D11			DAN202U	DIODE	
D12			MA2S111	DIODE	
D13		*	02DZ8.2(Y)	ZENER DIODE	
D14-17			MA2S111	DIODE	
D501-504			DAN202U	DIODE	
IC1			M62003FP	IC	
IC2,3			TA7805F	IC	
IC4		*	XC62FP3302P	IC	
IC5			TC74HC4053AFT	IC	
IC6			TC74HC4052AFT	IC	
IC7			AT25128N10SI27	IC	
IC8		*	64F2633JXUB	IC	
IC9-11			TC74LVX4245FS	IC	
IC12			LC73881M	IC	
IC13			TC74VHC08FT	IC	
IC14		*	TC74VHC32FT	IC	
IC15		*	TC74VHC04FT	IC	
IC16-18			TC74VHC08FT	IC	
IC19-25			TC74VHC573FT	IC	
IC26			TMT0111Q	IC	
IC27			TA75W393FU	IC	
IC28			TGT0210Q	IC	
IC29			TA75W01FU	IC	
IC30			TA75S393F	IC	
IC31			TC7SH08FU	IC	
IC32,33			PST9130NR	IC	
IC501			TA48M033F	IC	
IC502,503			XC62FP1802P	IC	
IC504		*	29LV800BAJXSBK	IC	
IC504		*	29LV800BJWGBK	IC	
IC505,506			TC74VHC573FT	IC	
IC507		*	TC74VHC02FT	IC	
IC508		*	29LV800BAJXQBK	IC	
IC508		*	29LV800BJWFBK	IC	
IC509			TC74VHC32FT	IC	
IC510			TC7WU04FU	IC	
IC511			TC74VHC08FT	IC	
IC512			TC74VHC573FT	IC	
IC513		*	TC74VHC32FT	IC	
IC514			TC74VHC573FT	IC	
IC515,516		*	320VC5402PGE	IC	
IC517			NJM2904V	IC	
IC518		*	AK4524	IC	

K : TS-2000 (K) **KX : TS-2000X (K)**
E : TS-2000 (E) **E2 : TS-2000 (E2)**

PARTS LIST

CONTROL UNIT (X53-391X-XX)
DISPLAY UNIT (X54-3320-00)
TX-RX 1 UNIT (X57-605X-XX)

Ref. No.	Address	New parts	Parts No.	Description	Destination
IC519			TC7W74FU	IC	
IC520			TC7WU04FU	IC	
IC521		*	TC74VHC4040FT	IC	
IC522,523		*	AK4518	IC	
IC524-529			NJM2100V	IC	
IC530			BU2099FV	IC	
IC531-534			BU4066BCFV	IC	
IC535			NJM2100V	IC	
Q1			DTC143EUA	DIGITAL TRANSISTOR	
Q2			DTA143EUA	DIGITAL TRANSISTOR	
Q3			DTC143EUA	DIGITAL TRANSISTOR	
Q4			DTA143EUA	DIGITAL TRANSISTOR	
Q5			DTC143EUA	DIGITAL TRANSISTOR	
Q9,10			DTC114EUA	DIGITAL TRANSISTOR	
Q13,14			2SC4617(R)	TRANSISTOR	
Q15			2SA1774(R)	TRANSISTOR	
Q16			2SC4617(R)	TRANSISTOR	
Q17			DTC143TUA	DIGITAL TRANSISTOR	
Q18			DTA143EUA	DIGITAL TRANSISTOR	
Q19			2SA1774(R)	TRANSISTOR	
Q20			DTA143EUA	DIGITAL TRANSISTOR	
Q501			DTC144EUA	DIGITAL TRANSISTOR	

DISPLAY UNIT (X54-3320-00)

201	1E	*	B11-1245-02	ILLUMINATION GUIDE			
202	1E	*	B11-1246-13	FILTER			
203	2E	*	B11-1257-03	FILTER			
204	1E	*	B30-2221-05	LAMP (5.5V/125MA/)			
205	2E	*	B38-0837-05	LCD			
D1,2		*	B30-2217-05	LED (Y)			
D3-9		*	B30-2167-05	LED (GR)			
C1,2			CK73GB1H103K	CHIP C	0.010UF	K	
C3-9			CK73FB1E104K	CHIP C	0.10UF	K	
C10			CK73GB1H103K	CHIP C	0.010UF	K	
C11			CK73FB1E104K	CHIP C	0.10UF	K	
C12			C92-0041-05	CHIP-ELE	10UF	10WV	
C13			CK73GB1H103K	CHIP C	0.010UF	K	
C15-23			CK73GB1H102K	CHIP C	1000PF	K	
C25-32			CK73GB1H102K	CHIP C	1000PF	K	
C33			C92-0038-05	CHIP-ELE	22UF	16WV	
C34			C92-0041-05	CHIP-ELE	10UF	10WV	
C35			CK73FB1E223K	CHIP C	0.022UF	K	
C36			CK73GB1H103K	CHIP C	0.010UF	K	
207	2E	*	E29-1186-04	INTER CONNECTOR			
208	2E	*	E29-1187-04	INTER CONNECTOR			
CN1			E40-5736-05	FLAT CABLE CONNECTOR			
211	2E	*	G11-4043-04	SHEET			
212	2E	*	J21-8397-03	HARDWARE FIXTURE			
L3,4			L40-1095-48	SMALL FIXED INDUCTOR (1UH/8)			
R1,2			RK73GB1J154J	CHIP R	150K	J	1/16W
R3			RK73FB2A105J	CHIP R	1.0M	J	1/10W
R4			RK73FB2A684J	CHIP R	680K	J	1/10W
R5			RK73FB2A100J	CHIP R	10	J	1/10W
R6-21			RK73GB1J101J	CHIP R	100	J	1/16W
R23			RK73GB1J101J	CHIP R	100	J	1/16W
R27			RK73FB2A681J	CHIP R	680	J	1/10W
R29			RK73FB2A681J	CHIP R	680	J	1/10W
R31			RK73FB2A560J	CHIP R	56	J	1/10W
R32			RK73FB2A221J	CHIP R	220	J	1/10W
R35			RK73FB2A222J	CHIP R	2.2K	J	1/10W
R36			RK73FB2A102J	CHIP R	1.0K	J	1/10W
R37			RK73FB2A392J	CHIP R	3.9K	J	1/10W
R38			RK73FB2A682J	CHIP R	6.8K	J	1/10W
R39			RK73FB2A152J	CHIP R	1.5K	J	1/10W
R40			RK73FB2A272J	CHIP R	2.7K	J	1/10W
R41-43			R92-1211-05	CHIP R	5.6	J	1/2W
VR1		*	R32-0676-05	SEMI FIXED VARIABLE RESISTOR			
S1-12		*	S70-0475-05	TACT SWITCH			
IC1,2			NJU6433F	IC			
IC3		*	SED1526F0A	IC			
IC4			BU2099FV	IC			
Q1			2SA1641(S,T)	TRANSISTOR			
Q2			2SC2712(Y)	TRANSISTOR			
Q3			2SA1162(Y)	TRANSISTOR			

TX-RX 1 UNIT (X57-605X-XX) 0-11 : K,KX 2-71 : E,E2

D86			B30-2001-05	LED (RED)			
D105			B30-2001-05	LED (RED)			
D801			B30-2138-05	LED (SR)			
D802			B30-2139-05	LED (G)			
D803			B30-2138-05	LED (SR)			
D804			B30-2139-05	LED (G)			
D810-824		*	B30-2167-05	LED (GR)			
D825			B30-2146-05	LED (OR)			
D826-834		*	B30-2167-05	LED (GR)			
D953,954		*	B30-2217-05	LED (Y)			
D955		*	B30-2167-05	LED (GR)			
D956		*	B30-2218-05	LED (OR)			
D957			B30-2140-05	LED (Y)			
C1,2			CK73GB1H103K	CHIP C	0.010UF	K	
C3			CC73GCH1H470J	CHIP C	47PF	J	
C4			CC73GCH1H070D	CHIP C	7.0PF	D	
C5			CC73GCH1H470J	CHIP C	47PF	J	
C6			CK73EB1H104K	CHIP C	0.10UF	K	
C7,8			CK73GB1H103K	CHIP C	0.010UF	K	
C9			CK73GB1H222K	CHIP C	2200PF	K	
C10			CK73FB1E104K	CHIP C	0.10UF	K	
C11			CK73FB1C105K	CHIP C	1.0UF	K	
C12			CE04EW1E4R7M	ELECTRO	4.7UF	25WV	
C13			CK73FB1E104K	CHIP C	0.10UF	K	
C14			CK73GB1H103K	CHIP C	0.010UF	K	
C15			CK73GB1H472K	CHIP C	4700PF	K	
C16			CK73GB1H222K	CHIP C	2200PF	K	
C17			CK73FB1E104K	CHIP C	0.10UF	K	
C18			CK73GB1H103K	CHIP C	0.010UF	K	
C19			CK73FB1C105K	CHIP C	1.0UF	K	
C20			CK73FB1E104K	CHIP C	0.10UF	K	
C21			CK73GB1H152K	CHIP C	1500PF	K	
C22			CK73GB1H472K	CHIP C	4700PF	K	

K : TS-2000 (K) **KX : TS-2000X (K)**
E : TS-2000 (E) **E2 : TS-2000 (E2)**

PARTS LIST

TX-RX 1 UNIT (X57-605X-XX)

Ref. No.	Address	New parts	Parts No.	Description			Destination
C23			CK73GB1H152K	CHIP C	1500PF	K	
C24,25			CK73GB1H103K	CHIP C	0.010UF	K	
C26			CK73GB1H392K	CHIP C	3900PF	K	
C27			CK73FB1E104K	CHIP C	0.10UF	K	
C28-30			CK73GB1H102K	CHIP C	1000PF	K	
C31			CK73GB1H332K	CHIP C	3300PF	K	
C32			CK73FB1E104K	CHIP C	0.10UF	K	
C33			CK73GB1H222K	CHIP C	2200PF	K	
C34			CK73FB1E104K	CHIP C	0.10UF	K	
C35			CK73GB1H102K	CHIP C	1000PF	K	
C36			CK73GB1H561K	CHIP C	560PF	K	
C37			CK73GB1H102K	CHIP C	1000PF	K	
C38			CK73GB1H222K	CHIP C	2200PF	K	
C39			CK73FB1E104K	CHIP C	0.10UF	K	
C40			CK73GB1H102K	CHIP C	1000PF	K	
C41			CK73FB1E104K	CHIP C	0.10UF	K	
C42			CK73GB1H102K	CHIP C	1000PF	K	
C43			CC73GCH1H271J	CHIP C	270PF	J	
C44,45			CK73GB1H102K	CHIP C	1000PF	K	
C46,47			CK73FB1E104K	CHIP C	0.10UF	K	
C48			CK73GB1H102K	CHIP C	1000PF	K	
C49,50			CC73GCH1H100D	CHIP C	10PF	D	
C51			CK73GB1H102K	CHIP C	1000PF	K	
C52			CK73FB1E104K	CHIP C	0.10UF	K	
C53			CK73GB1H102K	CHIP C	1000PF	K	
C54			CK73FB1E104K	CHIP C	0.10UF	K	
C55			CK73GB1H102K	CHIP C	1000PF	K	
C56			CC73GCH1H121J	CHIP C	120PF	J	
C57,58			CK73GB1H102K	CHIP C	1000PF	K	
C59			CK73FB1E104K	CHIP C	0.10UF	K	
C60			CK73GB1H102K	CHIP C	1000PF	K	
C61			CK73FB1E104K	CHIP C	0.10UF	K	
C62			CK73GB1H102K	CHIP C	1000PF	K	
C63			CC73GCH1H820J	CHIP C	82PF	J	
C64,65			CK73GB1H102K	CHIP C	1000PF	K	
C66,67			CK73FB1E104K	CHIP C	0.10UF	K	
C68			CK73GB1H102K	CHIP C	1000PF	K	
C69,70			CC73GCH1H040C	CHIP C	4.0PF	C	
C71			CK73GB1H102K	CHIP C	1000PF	K	
C72			CK73FB1E104K	CHIP C	0.10UF	K	
C73			CK73GB1H391K	CHIP C	390PF	K	
C74			CK73FB1E104K	CHIP C	0.10UF	K	
C75			CK73GB1H102K	CHIP C	1000PF	K	
C76			CC73GCH1H560J	CHIP C	56PF	J	
C77			CK73GB1H102K	CHIP C	1000PF	K	
C78			CK73GB1H471K	CHIP C	470PF	K	
C79			CK73FB1E104K	CHIP C	0.10UF	K	
C80			CC73GCH1H151J	CHIP C	150PF	J	
C81			CK73FB1E104K	CHIP C	0.10UF	K	
C82			CK73GB1H102K	CHIP C	1000PF	K	
C83			CC73GCH1H390J	CHIP C	39PF	J	
C84			CK73GB1H102K	CHIP C	1000PF	K	
C85			CC73GCH1H181J	CHIP C	180PF	J	
C86			CK73FB1E104K	CHIP C	0.10UF	K	
C87			CC73GCH1H220J	CHIP C	22PF	J	
C88			CK73FB1E104K	CHIP C	0.10UF	K	
C89			CK73GB1H102K	CHIP C	1000PF	K	
C90			CC73GCH1H470J	CHIP C	47PF	J	
C91			CK73GB1H102K	CHIP C	1000PF	K	
C93			CK73FB1E104K	CHIP C	0.10UF	K	

Ref. No.	Address	New parts	Parts No.	Description			Destination
C94			CC73GCH1H120J	CHIP C	12PF	J	
C95			CK73FB1E104K	CHIP C	0.10UF	K	
C96			CK73GB1H102K	CHIP C	1000PF	K	
C97			CC73GCH1H330J	CHIP C	33PF	J	
C98			CK73GB1H102K	CHIP C	1000PF	K	
C99			CK73FB1E104K	CHIP C	0.10UF	K	
C100			CC73GCH1H560J	CHIP C	56PF	J	
C101			CC73GCH1H150J	CHIP C	15PF	J	
C102			CK73FB1E104K	CHIP C	0.10UF	K	
C103			CC73GCH1H820J	CHIP C	82PF	J	
C104			CK73GB1H102K	CHIP C	1000PF	K	
C105			CC73GCH1H390J	CHIP C	39PF	J	
C106			CC73GCH1H330J	CHIP C	33PF	J	
C107			CK73GB1H103K	CHIP C	0.010UF	K	
C108-111			CK73FB1E104K	CHIP C	0.10UF	K	
C112			CK73GB1H471K	CHIP C	470PF	K	
C113			CC73GCH1H010B	CHIP C	1.0PF	B	
C114			CK73GB1H103K	CHIP C	0.010UF	K	
C115			CK73GB1C104K	CHIP C	0.10UF	K	
C116			CC73GCH1H180J	CHIP C	18PF	J	
C117			CK73GB1H103K	CHIP C	0.010UF	K	
C118			CC73GCH1H020B	CHIP C	2.0PF	B	
C119			CK73GB1H103K	CHIP C	0.010UF	K	
C121			CK73FB1C105K	CHIP C	1.0UF	K	
C123			CK73GB1C104K	CHIP C	0.10UF	K	
C124			CK73GB1H103K	CHIP C	0.010UF	K	
C125,126			CK73GB1C104K	CHIP C	0.10UF	K	
C127			CK73FB1C105K	CHIP C	1.0UF	K	
C129,130			CK73GB1H103K	CHIP C	0.010UF	K	
C131			CC73GCH1H270J	CHIP C	27PF	J	
C132			CK73GB1H103K	CHIP C	0.010UF	K	
C133			CK73GB1H471K	CHIP C	470PF	K	
C134			CK73FB1E104K	CHIP C	0.10UF	K	
C135,136			CK73GB1H103K	CHIP C	0.010UF	K	
C137			CK73GB1H471K	CHIP C	470PF	K	
C138,139			CK73GB1H103K	CHIP C	0.010UF	K	
C140			CC73GCH1H060D	CHIP C	6.0PF	D	
C141			CC73GCH1H020B	CHIP C	2.0PF	B	
C143,144			CK73GB1H103K	CHIP C	0.010UF	K	
C145			CC73GCH1H030C	CHIP C	3.0PF	C	
C146,147			CC73GCH1H020B	CHIP C	2.0PF	B	
C148			CK73GB1H103K	CHIP C	0.010UF	K	
C149			CC73GCH1H101J	CHIP C	100PF	J	
C150			CK73GB1H102K	CHIP C	1000PF	K	
C151			CC73GCH1H010B	CHIP C	1.0PF	B	
C152-154			CK73GB1H103K	CHIP C	0.010UF	K	
C156			CK73GB1H103K	CHIP C	0.010UF	K	
C158-164			CK73GB1H103K	CHIP C	0.010UF	K	
C165			CC73GCH1H020B	CHIP C	2.0PF	B	
C166			CK73GB1H103K	CHIP C	0.010UF	K	
C167			CC73GCH1H100D	CHIP C	10PF	D	
C168,169			CK73GB1H103K	CHIP C	0.010UF	K	
C172-177			CK73GB1H103K	CHIP C	0.010UF	K	
C178			CC73GCH1H100D	CHIP C	10PF	D	
C179			CC73GCH1H060D	CHIP C	6.0PF	D	
C180			CK73GB1H103K	CHIP C	0.010UF	K	
C181			CC73GCH1H100D	CHIP C	10PF	D	
C182,183			CK73GB1H103K	CHIP C	0.010UF	K	
C184			CC73GCH1H120J	CHIP C	12PF	J	
C185,186			CK73GB1H103K	CHIP C	0.010UF	K	

K : TS-2000 (K) **KX : TS-2000X (K)**
E : TS-2000 (E) **E2 : TS-2000 (E2)**

PARTS LIST

TX-RX 1 UNIT (X57-605X-XX)

Ref. No.	Address	New parts	Parts No.	Description			Destination
C187			CC73GCH1H120J	CHIP C	12PF	J	
C190			CC73GCH1H080D	CHIP C	8.0PF	D	
C191			CC73GCH1H200J	CHIP C	20PF	J	
C192			CK73GB1H103K	CHIP C	0.010UF	K	
C193			CC73GCH1H080D	CHIP C	8.0PF	D	
C196			CK73GB1H103K	CHIP C	0.010UF	K	
C197			CE04EW1C100M	ELECTRO	10UF	16WV	
C198-201			CK73GB1H103K	CHIP C	0.010UF	K	
C202			CC73GCH1H100D	CHIP C	10PF	D	
C203			CC73GCH1H040C	CHIP C	4.0PF	C	
C204			C92-0628-05	CHIP-TAN	10UF	10WV	
C205			CC73GCH1H100D	CHIP C	10PF	D	
C206-211			CK73GB1H103K	CHIP C	0.010UF	K	
C213,214			CK73GB1H103K	CHIP C	0.010UF	K	
C216			C92-0003-05	CHIP-TAN	0.47UF	25WV	
C217,218			CK73GB1H103K	CHIP C	0.010UF	K	
C219			C92-0003-05	CHIP-TAN	0.47UF	25WV	
C221,222			CK73GB1H103K	CHIP C	0.010UF	K	
C223			CK73GB1H102K	CHIP C	1000PF	K	
C224			CC73GCH1H100D	CHIP C	10PF	D	
C225			CK73GB1H103K	CHIP C	0.010UF	K	
C227,228			CK73GB1H103K	CHIP C	0.010UF	K	
C229			C92-0004-05	CHIP-TAN	1.0UF	16WV	
C230			CE04EW1C101M	ELECTRO	100UF	16WV	
C233			CC73GCH1H270J	CHIP C	27PF	J	
C234,235			CK73GB1H103K	CHIP C	0.010UF	K	
C236			CK73GB1H102K	CHIP C	1000PF	K	
C237,238			CK73GB1C104K	CHIP C	0.10UF	K	
C239			CC73GCH1H271J	CHIP C	270PF	J	
C241			CK73GB1C104K	CHIP C	0.10UF	K	
C242			CK73GB1H472K	CHIP C	4700PF	K	
C243			CK73GB1C104K	CHIP C	0.10UF	K	
C244			CK73FB1C105K	CHIP C	1.0UF	K	
C245			CK73GB1C104K	CHIP C	0.10UF	K	
C246-250			CK73FB1C105K	CHIP C	1.0UF	K	
C251			CK73GB1C104K	CHIP C	0.10UF	K	
C252			CK73GB1C473K	CHIP C	0.047UF	K	
C254			CK73GB1E223K	CHIP C	0.022UF	K	
C258			CE04EW1C100M	ELECTRO	10UF	16WV	
C259-262			CK73GB1C104K	CHIP C	0.10UF	K	
C263			CK73GB1H103K	CHIP C	0.010UF	K	
C264-269			CK73GB1C104K	CHIP C	0.10UF	K	
C270			CC73GCH1H101J	CHIP C	100PF	J	
C271			CK73GB1C104K	CHIP C	0.10UF	K	
C272			CC73GCH1H331J	CHIP C	330PF	J	
C273,274			CK73GB1C104K	CHIP C	0.10UF	K	
C275			CC73GCH1H271J	CHIP C	270PF	J	
C276-278			CK73GB1C104K	CHIP C	0.10UF	K	
C279			CK73GB1H103K	CHIP C	0.010UF	K	
C281			CK73FB1C105K	CHIP C	1.0UF	K	
C282			CC73GCH1H101J	CHIP C	100PF	J	
C283			CE04EW1C100M	ELECTRO	10UF	16WV	
C284			CK73GB1H103K	CHIP C	0.010UF	K	
C286			CK73FB1C105K	CHIP C	1.0UF	K	
C287,288			CK73GB1C104K	CHIP C	0.10UF	K	
C289			CK73GB1H103K	CHIP C	0.010UF	K	
C290			CK73GB1C104K	CHIP C	0.10UF	K	
C291			CK73FB1E104K	CHIP C	0.10UF	K	
C292			CC73GCH1H390J	CHIP C	39PF	J	
C293,294			CK73GB1H103K	CHIP C	0.010UF	K	

Ref. No.	Address	New parts	Parts No.	Description			Destination
C295-298			CK73GB1C104K	CHIP C	0.10UF	K	
C299-301			CK73GB1H103K	CHIP C	0.010UF	K	
C302			CC73GCH1H150J	CHIP C	15PF	J	
C303			CK73GB1H471K	CHIP C	470PF	K	
C304			CK73GB1H103K	CHIP C	0.010UF	K	
C305			CK73GB1H471K	CHIP C	470PF	K	
C306,307			CK73GB1H103K	CHIP C	0.010UF	K	
C308			CC73GCH1H010B	CHIP C	1.0PF	B	
C309			CK73GB1H103K	CHIP C	0.010UF	K	
C310			CC73GCH1H180J	CHIP C	18PF	J	
C311			CC73GCH1H0R5B	CHIP C	0.5PF	B	
C312			CK73GB1C104K	CHIP C	0.10UF	K	
C313			CC73GCH1H180J	CHIP C	18PF	J	
C314			CC73GCH1H020B	CHIP C	2.0PF	B	
C315			CK73GB1H103K	CHIP C	0.010UF	K	
C316			CC73GCH1H270J	CHIP C	27PF	J	
C317-320			CK73GB1H103K	CHIP C	0.010UF	K	
C321			CC73GCH1H150J	CHIP C	15PF	J	
C322,323			CK73GB1H103K	CHIP C	0.010UF	K	
C324			CK73GB1H332K	CHIP C	3300PF	K	
C327-337			CK73GB1H103K	CHIP C	0.010UF	K	
C338			CK73FB1C105K	CHIP C	1.0UF	K	
C339-342			CK73GB1H103K	CHIP C	0.010UF	K	
C343			CK73GB1C104K	CHIP C	0.10UF	K	
C344-346			CK73GB1H103K	CHIP C	0.010UF	K	
C347			CK73FB1C474K	CHIP C	0.47UF	K	
C348			CK73GB1H471K	CHIP C	470PF	K	
C349			CK73GB1C273K	CHIP C	0.027UF	K	
C350			CK73GB1H103K	CHIP C	0.010UF	K	
C351			CK73FB1E104K	CHIP C	0.10UF	K	
C352			CK73GB1C473K	CHIP C	0.047UF	K	
C353-358			CK73GB1H103K	CHIP C	0.010UF	K	
C359			CC73GCH1H010B	CHIP C	1.0PF	B	
C361-363			CK73GB1H103K	CHIP C	0.010UF	K	
C364			CE04EW1C100M	ELECTRO	10UF	16WV	
C365-369			CK73GB1H103K	CHIP C	0.010UF	K	
C370			CC73GCH1H100D	CHIP C	10PF	D	
C373			C92-0606-05	CHIP-TAN	4.7UF	10WV	
C374			CK73FB1C105K	CHIP C	1.0UF	K	
C375-378			CK73GB1H103K	CHIP C	0.010UF	K	
C379			CC73GCH1H030C	CHIP C	3.0PF	C	
C380			CK73GB1H103K	CHIP C	0.010UF	K	
C381,382			CC73GCH1H221J	CHIP C	220PF	J	
C383			CC73GUJ1H070D	CHIP C	7.0PF	D	
C384			CC73GUJ1H030C	CHIP C	3.0PF	C	
C385			CK73FB1C105K	CHIP C	1.0UF	K	
C386			CK73GB1H103K	CHIP C	0.010UF	K	
C388			C92-0628-05	CHIP-TAN	10UF	10WV	
C389			CK73GB1E223K	CHIP C	0.022UF	K	
C390,391			CK73FB1C105K	CHIP C	1.0UF	K	
C393			CK73FB1C105K	CHIP C	1.0UF	K	
C394			C92-0606-05	CHIP-TAN	4.7UF	10WV	
C395			CK73GB1H103K	CHIP C	0.010UF	K	
C396			CE04EW1C101M	ELECTRO	100UF	16WV	
C397,398			CE04EW1C470M	ELECTRO	47UF	16WV	
C399			CE04EW1C471M	ELECTRO	470UF	16WV	
C400			CE04EW1C331M	ELECTRO	330UF	16WV	
C401			CE04EW1C471M	ELECTRO	470UF	16WV	
C402			CK73FB1E104K	CHIP C	0.10UF	K	
C403			CE04EW1C470M	ELECTRO	47UF	16WV	

K : TS-2000 (K) **KX : TS-2000X (K)**
E : TS-2000 (E) **E2 : TS-2000 (E2)**

PARTS LIST

TX-RX 1 UNIT (X57-605X-XX)

Ref. No.	Address	New parts	Parts No.	Description			Destination
C404			CK73FB1E104K	CHIP C	0.10UF	K	
C405			CE04EW1C470M	ELECTRO	47UF	16WV	
C406			CK73GB1H103K	CHIP C	0.010UF	K	
C407,408			CE04EW1C100M	ELECTRO	10UF	16WV	
C409			CK73FB1C105K	CHIP C	1.0UF	K	
C410-413			CK73FB1E104K	CHIP C	0.10UF	K	
C417			CK73GB1H102K	CHIP C	1000PF	K	
C418			CK73GB1H471K	CHIP C	470PF	K	
C419			CK73GB1H102K	CHIP C	1000PF	K	
C420			C92-0004-05	CHIP-TAN	1.0UF	16WV	
C421			CK73GB1H102K	CHIP C	1000PF	K	
C422,423			CK73GB1H471K	CHIP C	470PF	K	
C424			CK73GB1H102K	CHIP C	1000PF	K	
C425			CK73FB1E104K	CHIP C	0.10UF	K	
C426			CK73GB1H222K	CHIP C	2200PF	K	
C427			CK73GB1H332K	CHIP C	3300PF	K	
C428			CE04EW1C470M	ELECTRO	47UF	16WV	
C429			CK73GB1H103K	CHIP C	0.010UF	K	
C430,431			CE04EW1C470M	ELECTRO	47UF	16WV	
C432,433			CK73GB1H103K	CHIP C	0.010UF	K	
C434-436			CK73GB1H102K	CHIP C	1000PF	K	
C437			CK73GB1H103K	CHIP C	0.010UF	K	
C438			CK45FE2H222P	CERAMIC	2200PF	P	
C439,440			CK73GB1H103K	CHIP C	0.010UF	K	
C441-444			CK73GB1H102K	CHIP C	1000PF	K	
C449-452			CK73FB1C105K	CHIP C	1.0UF	K	
C453			CK73GB1H103K	CHIP C	0.010UF	K	
C454			CK73FB1C105K	CHIP C	1.0UF	K	
C455			CK73GB1H102K	CHIP C	1000PF	K	
C456			CE04EW1C101M	ELECTRO	100UF	16WV	
C457			CK73GB1H102K	CHIP C	1000PF	K	
C458			CK73FB1C105K	CHIP C	1.0UF	K	
C459			CK73GB1H103K	CHIP C	0.010UF	K	
C460,461			CK73GB1H102K	CHIP C	1000PF	K	
C462			CK73GB1H103K	CHIP C	0.010UF	K	
C463-466			CK73GB1H102K	CHIP C	1000PF	K	
C467-470			CK73GB1H103K	CHIP C	0.010UF	K	
C471			CK73GB1E223K	CHIP C	0.022UF	K	
C472			C92-0003-05	CHIP-TAN	0.47UF	25WV	
C473			CK73GB1C473K	CHIP C	0.047UF	K	
C474			CK73GB1H102K	CHIP C	1000PF	K	
C475			CK73GB1H103K	CHIP C	0.010UF	K	
C476			CE04EW1C100M	ELECTRO	10UF	16WV	
C477			CE04EW1E4R7M	ELECTRO	4.7UF	25WV	
C478			CK73GB1H103K	CHIP C	0.010UF	K	
C479			CC73GCH1H101J	CHIP C	100PF	J	
C480			CE04EW1E4R7M	ELECTRO	4.7UF	25WV	
C481-484			CK73GB1H102K	CHIP C	1000PF	K	
C485-487			CC73GCH1H101J	CHIP C	100PF	J	
C488			CE04EW1C100M	ELECTRO	10UF	16WV	
C489			CK73GB1H103K	CHIP C	0.010UF	K	
C490,491			CC73GCH1H101J	CHIP C	100PF	J	
C492			C92-0004-05	CHIP-TAN	1.0UF	16WV	
C493-499			CK73GB1H103K	CHIP C	0.010UF	K	
C500			CK73GB1C104K	CHIP C	0.10UF	K	
C501			CK73GB1H103K	CHIP C	0.010UF	K	
C502			CK73GB1C104K	CHIP C	0.10UF	K	
C505			CK73GB1H102K	CHIP C	1000PF	K	
C506			CE04EW1C220M	ELECTRO	22UF	16WV	
C507,508			CK73GB1H102K	CHIP C	1000PF	K	

Ref. No.	Address	New parts	Parts No.	Description			Destination
C509			CE04EW1C220M	ELECTRO	22UF	16WV	
C510,511			CK73GB1H102K	CHIP C	1000PF	K	
C512			CE04EW1C220M	ELECTRO	22UF	16WV	
C513,514			CK73GB1H102K	CHIP C	1000PF	K	
C515			CE04EW1C220M	ELECTRO	22UF	16WV	
C516			CK73GB1H102K	CHIP C	1000PF	K	
C517-520			CK73FB1E104K	CHIP C	0.10UF	K	
C521			CK73GB1H102K	CHIP C	1000PF	K	
C522			CE04EW1C101M	ELECTRO	100UF	16WV	
C523-525			C92-0606-05	CHIP-TAN	4.7UF	10WV	
C526-528			CK73FB1C105K	CHIP C	1.0UF	K	
C529-531			C92-0606-05	CHIP-TAN	4.7UF	10WV	
C532-537			CK73GB1H102K	CHIP C	1000PF	K	
C538,539			CK73GB1H103K	CHIP C	0.010UF	K	
C547			CK73GB1H103K	CHIP C	0.010UF	K	
C553			CE04EW1C221M	ELECTRO	220UF	16WV	
C556			CK73FB1C105K	CHIP C	1.0UF	K	
C601			CK73GB1C473K	CHIP C	0.047UF	K	
C602			CE04EW1C100M	ELECTRO	10UF	16WV	
C603			CK73GB1C473K	CHIP C	0.047UF	K	
C604			CK73GB1H472K	CHIP C	4700PF	K	
C605-607			CK73GB1H103K	CHIP C	0.010UF	K	
C608			CE04EW1C100M	ELECTRO	10UF	16WV	
C609			CK73GB1H472K	CHIP C	4700PF	K	
C610-613			CK73GB1C473K	CHIP C	0.047UF	K	
C614			CK73GB1H102K	CHIP C	1000PF	K	
C615			CK73GB1H182K	CHIP C	1800PF	K	
C616			CK73GB1H102K	CHIP C	1000PF	K	
C617			CE04EW1C100M	ELECTRO	10UF	16WV	
C618,619			CK73GB1C473K	CHIP C	0.047UF	K	
C620			CK73GB1H472K	CHIP C	4700PF	K	
C621-623			CK73GB1H103K	CHIP C	0.010UF	K	
C624			CE04EW1C100M	ELECTRO	10UF	16WV	
C625,626			CK73GB1C473K	CHIP C	0.047UF	K	
C627			CK73GB1H472K	CHIP C	4700PF	K	
C628,629			CK73GB1C473K	CHIP C	0.047UF	K	
C630			CC73GCH1H680J	CHIP C	68PF	J	
C631			CC73GCH1H180J	CHIP C	18PF	J	
C632			CC73GCH1H820J	CHIP C	82PF	J	
C633			CC73GCH1H080D	CHIP C	8.0PF	D	
C634			CC73GCH1H390J	CHIP C	39PF	J	
C635			CE04EW1C100M	ELECTRO	10UF	16WV	
C636,637			CK73GB1C473K	CHIP C	0.047UF	K	
C638			CK73GB1H472K	CHIP C	4700PF	K	
C639-641			CK73GB1H103K	CHIP C	0.010UF	K	
C642			CE04EW1C100M	ELECTRO	10UF	16WV	
C643			CK73GB1H472K	CHIP C	4700PF	K	
C644-647			CK73GB1C473K	CHIP C	0.047UF	K	
C648			CC73GCH1H390J	CHIP C	39PF	J	
C649			CC73GCH1H180J	CHIP C	18PF	J	
C650			CC73GCH1H820J	CHIP C	82PF	J	
C651			CC73GCH1H090B	CHIP C	9.0PF	B	
C652			CC73GCH1H390J	CHIP C	39PF	J	
C700			CE04EW1C220M	ELECTRO	22UF	16WV	
C703			CK73GB1H103K	CHIP C	0.010UF	K	
C704			CK73GB1C104K	CHIP C	0.10UF	K	
C705			CC73GCH1H221J	CHIP C	220PF	J	
C706-708			CC73GUJ1H040C	CHIP C	4.0PF	C	
C709,710			CK73GB1H103K	CHIP C	0.010UF	K	
C711			CK73GB1H102K	CHIP C	1000PF	K	

K : TS-2000 (K) **KX : TS-2000X (K)**
E : TS-2000 (E) **E2 : TS-2000 (E2)**

PARTS LIST

TX-RX 1 UNIT (X57-605X-XX)

Ref. No.	Address	New parts	Parts No.	Description			Destination
C712-716			CK73GB1H103K	CHIP C	0.010UF	K	
C718			CC73GUJ1H040C	CHIP C	4.0PF	C	
C719			CK73GB1H103K	CHIP C	0.010UF	K	
C720			CC73GCH1H390J	CHIP C	39PF	J	
C721,722			CK73GB1C104K	CHIP C	0.10UF	K	
C723			C92-0606-05	CHIP-TAN	4.7UF	10WV	
C724,725			CK73GB1H103K	CHIP C	0.010UF	K	
C726			CK73FB1C105K	CHIP C	1.0UF	K	
C727,728			CC73GCH1H101J	CHIP C	100PF	J	
C739			CK73GB1H103K	CHIP C	0.010UF	K	
C741			CK73FB1C105K	CHIP C	1.0UF	K	
C743			CK73GB1C104K	CHIP C	0.10UF	K	
C744			CK73GB1H103K	CHIP C	0.010UF	K	
C745,746			CK73GB1C104K	CHIP C	0.10UF	K	
C747			CK73FB1C105K	CHIP C	1.0UF	K	
C749			CK73GB1H103K	CHIP C	0.010UF	K	
C750			CK73FB1E104K	CHIP C	0.10UF	K	
C752			CC73GCH1H560J	CHIP C	56PF	J	
C753			CC73GCH1H100D	CHIP C	10PF	D	
C754,755			CC73GCH1H271J	CHIP C	270PF	J	
C757			CK73GB1H102K	CHIP C	1000PF	K	
C758			CK73GB1E223K	CHIP C	0.022UF	K	
C759,760			CK73FB1C105K	CHIP C	1.0UF	K	
C761,762			CK73GB1H103K	CHIP C	0.010UF	K	
C763			CC73GCH1H030C	CHIP C	3.0PF	C	
C765,766			CK73GB1H103K	CHIP C	0.010UF	K	
C767			CC73GCH1H010B	CHIP C	1.0PF	B	
C770,771			CK73GB1H102K	CHIP C	1000PF	K	
C772			CC73GCH1H470J	CHIP C	47PF	J	
C773-776			CK73GB1H102K	CHIP C	1000PF	K	
C777			CC73GCH1H221J	CHIP C	220PF	J	
C778			CE04EW1C100M	ELECTRO	10UF	16WV	
C779			CK73GB1C104K	CHIP C	0.10UF	K	
C780			CK73GB1H103K	CHIP C	0.010UF	K	
C781			CC73GCH1H101J	CHIP C	100PF	J	
C782			C92-0004-05	CHIP-TAN	1.0UF	16WV	
C783			CK73GB1C104K	CHIP C	0.10UF	K	
C784,785			CK73GB1H152K	CHIP C	1500PF	K	
C786			CK73FB1C334K	CHIP C	0.33UF	K	
C787			CK73FB1E104K	CHIP C	0.10UF	K	
C788,789			CK73FB1C105K	CHIP C	1.0UF	K	
C790,791			CK73GB1H103K	CHIP C	0.010UF	K	
C792			CK73EB1H104K	CHIP C	0.10UF	K	
C800			CK73GB1E223K	CHIP C	0.022UF	K	
C801,802			CK73GB1C104K	CHIP C	0.10UF	K	
C803			C92-0038-05	CHIP-ELE	22UF	16WV	
C804			CK73GB1C104K	CHIP C	0.10UF	K	
C806			CK73GB1H102K	CHIP C	1000PF	K	
C810,811			CK73GB1C104K	CHIP C	0.10UF	K	
C812-816			CK73GB1H102K	CHIP C	1000PF	K	
C818-820			CK73GB1C104K	CHIP C	0.10UF	K	
C821,822			CC73GCH1H100D	CHIP C	10PF	D	
C823			CK73GB1C104K	CHIP C	0.10UF	K	
C824			CK73GB1H103K	CHIP C	0.010UF	K	
C826-842			CK73GB1H102K	CHIP C	1000PF	K	
C844			CK73GB1H102K	CHIP C	1000PF	K	
C847-850			CK73GB1H102K	CHIP C	1000PF	K	
C851			CK73GB1H103K	CHIP C	0.010UF	K	
C852-855			CK73GB1H102K	CHIP C	1000PF	K	
C858-860			CK73GB1H102K	CHIP C	1000PF	K	

Ref. No.	Address	New parts	Parts No.	Description			Destination
C861			CK73GB1H103K	CHIP C	0.010UF	K	
C862-866			CK73GB1H102K	CHIP C	1000PF	K	
C867,868			CK73GB1C104K	CHIP C	0.10UF	K	
C869			CK73FB1C105K	CHIP C	1.0UF	K	
C870,871			CK73GB1C473K	CHIP C	0.047UF	K	
C950,951			CK73GB1H103K	CHIP C	0.010UF	K	
C952-955			CK73EF1C105Z	CHIP C	1.0UF	Z	
C956-959			CK73GB1H103K	CHIP C	0.010UF	K	
C970			CE04EW1A101M	ELECTRO	100UF	10WV	
TC1,2			C05-0344-05	CERAMIC TRIMMER CAP (30P)			E,E2
TC3			C05-0369-05	CERAMIC TRIMMER CAP			
-			E18-0254-05	SOCKET			
-		*	E23-1176-04	EARTH LUG			
CN1			E04-0154-05	PIN SOCKET			
CN2-4			E40-5487-05	PIN ASSY			
CN5			E04-0154-05	PIN SOCKET			
CN6			E40-0211-05	PIN ASSY			
CN7			E04-0154-05	PIN SOCKET			
CN9			E40-0211-05	PIN ASSY			
CN11			E40-3239-05	PIN ASSY			
CN12			E04-0154-05	PIN SOCKET			
CN14			E04-0154-05	PIN SOCKET			
CN16			E40-3239-05	PIN ASSY			
CN17,18			E40-3237-05	PIN ASSY			
CN20			E40-5618-05	FLAT CABLE CONNECTOR			
CN21			E40-5747-05	PIN ASSY SOCKET			
CN22,23			E04-0154-05	PIN SOCKET			
CN24,25			E40-6009-05	FLAT CABLE CONNECTOR			
CN26,27			E40-5978-05	FLAT CABLE CONNECTOR			
CN29			E40-5978-05	FLAT CABLE CONNECTOR			
CN31			E40-3238-05	PIN ASSY			
CN32			E40-3239-05	PIN ASSY			
CN49			E04-0154-05	PIN SOCKET			
CN800			E40-5978-05	FLAT CABLE CONNECTOR			
CN801			E40-5736-05	FLAT CABLE CONNECTOR			
CN804			E40-3239-05	PIN ASSY			
CN805			E40-5978-05	FLAT CABLE CONNECTOR			
CN806			E40-5741-05	FLAT CABLE CONNECTOR			
CN950			E40-3250-05	PIN ASSY			
CN951			E40-3251-05	PIN ASSY			
CN952		*	E40-6074-05	FLAT CABLE CONNECTOR			
CN953		*	E40-6077-05	FLAT CABLE CONNECTOR			
CN956		*	E40-6079-05	PIN ASSY			
CN957		*	E40-6080-05	PIN ASSY			
CN962			E40-3248-05	PIN ASSY			
J1			E13-0166-05	PHONE JACK			
J2,3			E11-0414-05	3.5D PHONE JACK (3P)			
J4			E06-0752-05	DIN SOCKET			
J5			E58-0435-05	SUB SOCKET (D)			
J6			E58-0410-05	MODULAR JACK			
J7			E06-0859-05	DIN SOCKET			
J8			E56-0408-05	DIN SOCKET			
J950			E06-0858-15	RF COAXIAL RECEPTACLE (ROUND)			
J951			E11-0438-05	PHONE JACK (9P)			
W1		*	E37-0884-05	LEAD WIRE WITH CONNECTOR			
W2		*	E37-0954-05	LEAD WIRE WITH CONNECTOR			
-		*	F10-2003-14	SHIELDING CASE			
F1			F53-0115-05	FUSE			

K : TS-2000 (K) **KX : TS-2000X (K)**
E : TS-2000 (E) **E2 : TS-2000 (E2)**

PARTS LIST

TX-RX 1 UNIT (X57-605X-XX)

Ref. No.	Address	New parts	Parts No.	Description	Destination
-			G02-0794-04	FLAT SPRING	
CN30			J19-1570-05	HOLDER	
CF1		*	L72-0984-05	CERAMIC FILTER	
CF2		*	L72-0985-05	CERAMIC FILTER	
CF3			L72-0333-05	CERAMIC FILTER	
CF4		*	L72-0984-05	CERAMIC FILTER	
L1			L40-1885-48	SMALL FIXED INDUCTOR (180NH)	
L2			L33-0695-05	SMALL FIXED INDUCTOR	
L3,4			L40-6891-14	SMALL FIXED INDUCTOR	
L5,6			L33-0695-05	SMALL FIXED INDUCTOR	
L7			L40-6891-15	SMALL FIXED INDUCTOR	E,E2
L8			L33-0695-05	SMALL FIXED INDUCTOR	
L9			L40-6891-15	SMALL FIXED INDUCTOR	E,E2
L10			L40-5695-34	SMALL FIXED INDUCTOR (5.6UH)	
L11			L33-0695-05	SMALL FIXED INDUCTOR	
L12,13		*	L40-2215-85	SMALL FIXED INDUCTOR (220U)	
L14			L40-1892-14	SMALL FIXED INDUCTOR	
L15			L40-6891-14	SMALL FIXED INDUCTOR	
L16			L40-1892-14	SMALL FIXED INDUCTOR	
L17			L40-1292-14	SMALL FIXED INDUCTOR	
L18			L40-5691-14	SMALL FIXED INDUCTOR	
L19			L40-1292-14	SMALL FIXED INDUCTOR	
L20			L40-1092-14	SMALL FIXED INDUCTOR	
L21			L40-3391-14	SMALL FIXED INDUCTOR	
L22			L40-1092-14	SMALL FIXED INDUCTOR	
L23-25			L34-4262-05	COIL	
L26			L40-3382-14	SMALL FIXED INDUCTOR	
L27			L40-2792-14	SMALL FIXED INDUCTOR	
L28			L40-3382-14	SMALL FIXED INDUCTOR	
L29			L40-2282-14	SMALL FIXED INDUCTOR	
L30			L40-2292-14	SMALL FIXED INDUCTOR	
L31			L40-2282-14	SMALL FIXED INDUCTOR	
L32-34			L34-4289-05	COIL	
L35			L40-2282-14	SMALL FIXED INDUCTOR	
L36			L40-1592-14	SMALL FIXED INDUCTOR	
L37,38			L40-2282-14	SMALL FIXED INDUCTOR	
L39			L40-1292-14	SMALL FIXED INDUCTOR	
L40-43			L40-2282-14	SMALL FIXED INDUCTOR	
L44			L34-4333-05	COIL	
L45,46			L34-2026-05	COIL	
L47			L33-0695-05	SMALL FIXED INDUCTOR	
L48		*	L40-1588-76	SMALL FIXED INDUCTOR (0.15UH)	
L49		*	L40-1088-76	SMALL FIXED INDUCTOR (0.1UH)	
L50		*	L40-4705-85	SMALL FIXED INDUCTOR (47U)	
L51			L19-0324-05	TOROIDAL COIL	
L52			L39-1255-05	TOROIDAL COIL	
L53		*	L40-1015-85	SMALL FIXED INDUCTOR (100U)	
L54			L34-4413-05	COIL	
L55			L33-0695-05	SMALL FIXED INDUCTOR	
L56			L40-2295-85	SMALL FIXED INDUCTOR (2.2U)	
L57		*	L33-1394-05	SMALL FIXED INDUCTOR	
L58			L40-1085-34	SMALL FIXED INDUCTOR (100NH)	
L59			L33-0695-05	SMALL FIXED INDUCTOR	
L60			L39-1255-05	TOROIDAL COIL	
L61		*	L40-1015-85	SMALL FIXED INDUCTOR (100U)	
L62			L34-4394-05	COIL	
L63			L34-4393-05	COIL	
L64,65			L34-4394-05	COIL	

Ref. No.	Address	New parts	Parts No.	Description	Destination
L66			L34-4393-05	COIL	
L67			L34-4394-05	COIL	
L68			L34-4415-05	COIL	
L69			L34-4207-05	COIL	
L70		*	L40-1015-85	SMALL FIXED INDUCTOR (100U)	
L71			L34-4414-05	COIL	
L72			L40-1085-34	SMALL FIXED INDUCTOR (100NH)	
L73			L40-2285-34	SMALL FIXED INDUCTOR (220NH)	
L74-77		*	L40-1015-85	SMALL FIXED INDUCTOR (100U)	
L78			L33-0695-05	SMALL FIXED INDUCTOR	
L80		*	L40-4705-85	SMALL FIXED INDUCTOR (47U)	
L81,82			L34-4401-05	COIL	
L83			L34-4459-05	COIL	
L84-86			L40-2221-33	SMALL FIXED INDUCTOR	
L87		*	L34-4663-05	COIL	
L90		*	L40-4705-85	SMALL FIXED INDUCTOR (47U)	
L91			L40-1085-34	SMALL FIXED INDUCTOR (100NH)	
L92		*	L33-1394-05	SMALL FIXED INDUCTOR	
L93			L33-0695-05	SMALL FIXED INDUCTOR	
L94		*	L40-1015-85	SMALL FIXED INDUCTOR (100U)	
L95			L19-0324-05	TOROIDAL COIL	
L96			L34-4333-05	COIL	
L97			L39-1255-05	TOROIDAL COIL	
L98-100			L34-4333-05	COIL	
L101		*	L40-1015-85	SMALL FIXED INDUCTOR (100U)	
L102			L34-4222-05	COIL	
L103			L34-4025-05	COIL	
L104			L40-1005-85	SMALL FIXED INDUCTOR (10U)	
L105			L34-4025-05	COIL	
L106,107		*	L40-1015-85	SMALL FIXED INDUCTOR (100U)	
L108,109			L34-4025-05	COIL	
L110-113		*	L40-1015-85	SMALL FIXED INDUCTOR (100U)	
L115,116			L40-1095-85	SMALL FIXED INDUCTOR (1.0U)	
L117			L40-1021-13	SMALL FIXED INDUCTOR	
L118		*	L33-1425-05	CHOKE COIL	
L119			L33-0695-05	SMALL FIXED INDUCTOR	
L121			L40-1095-85	SMALL FIXED INDUCTOR (1.0U)	
L122-125		*	L40-1015-85	SMALL FIXED INDUCTOR (100U)	
L126		*	L40-4705-85	SMALL FIXED INDUCTOR (47U)	
L129-131		*	L40-1015-85	SMALL FIXED INDUCTOR (100U)	
L132-135		*	L40-1095-85	SMALL FIXED INDUCTOR (1.0U)	
L601,602		*	L40-1005-85	SMALL FIXED INDUCTOR (10U)	
L603,604		*	L40-1015-85	SMALL FIXED INDUCTOR (100U)	
L605,606			L40-1005-85	SMALL FIXED INDUCTOR (10U)	
L607		*	L40-3395-85	SMALL FIXED INDUCTOR (3.3U)	
L608		*	L40-3995-85	SMALL FIXED INDUCTOR (3.9U)	
L609,610			L40-1005-85	SMALL FIXED INDUCTOR (10U)	
L611		*	L40-2795-85	SMALL FIXED INDUCTOR (2.7U)	
L612		*	L40-3395-85	SMALL FIXED INDUCTOR (3.3U)	
L613		*	L34-4663-05	COIL	
L614		*	L34-4649-05	COIL	
L615		*	L40-1015-85	SMALL FIXED INDUCTOR (100U)	
L616,617			L40-3301-37	SMALL FIXED INDUCTOR (33.00UH)	
L618			L40-1005-85	SMALL FIXED INDUCTOR (10U)	
L700			L40-1885-34	SMALL FIXED INDUCTOR (180NH)	
L701			L33-0695-05	SMALL FIXED INDUCTOR	
L702			L40-2295-85	SMALL FIXED INDUCTOR (2.2U)	
L703		*	L33-1394-05	SMALL FIXED INDUCTOR	
L704			L40-1085-34	SMALL FIXED INDUCTOR (100NH)	
L705			L33-0695-05	SMALL FIXED INDUCTOR	

K : TS-2000 (K) **KX : TS-2000X (K)**
E : TS-2000 (E) **E2 : TS-2000 (E2)**

PARTS LIST

TX-RX 1 UNIT (X57-605X-XX)

Ref. No.	Address	New parts	Parts No.	Description	Destination
L706		*	L33-1394-05	SMALL FIXED INDUCTOR	
L707			L40-1081-36	SMALL FIXED INDUCTOR (100NH)	
L709			L40-3395-34	SMALL FIXED INDUCTOR (3.3UH)	
L710-713			L40-3391-37	SMALL FIXED INDUCTOR (3.300UH)	
L714,715			L40-1005-85	SMALL FIXED INDUCTOR (10U)	
L716			L40-4705-34	SMALL FIXED INDUCTOR (47UH)	
L717			L92-0131-05	FERRITE CHIP	
L718		*	L40-1015-85	SMALL FIXED INDUCTOR (100U)	
L800,801			L40-1095-48	SMALL FIXED INDUCTOR (1UH)	
X1		*	L77-1827-05	CRYSTAL RESONATOR (10.595M)	
X800			L77-1680-05	CRYSTAL RESONATOR (11.0592MHZ)	
XF1		*	L71-0562-05	MCF (69.085M)	
XF2		*	L71-0561-05	MCF (75.925M)	
XF5			L71-0433-15	MCF (10.695MHZ)	
XF6		*	L71-0569-05	CRYSTAL FILTER (10.695M/2.7K)	
XF9		*	L71-0570-05	CRYSTAL FILTER (10.595M/6K)	
CP1-3		*	RK75GB1J103J	CHIP-COM 10K J 1/16W	
CP6-9		*	RK75GB1J103J	CHIP-COM 10K J 1/16W	
CP10,11		*	RK75GB1J101J	CHIP-COM 100 J 1/16W	
CP801-804			RK75GB1J473J	CHIP-COM 47K J 1/16W	
CP805-808		*	RK75GB1J103J	CHIP-COM 10K J 1/16W	
CP809,810			RK75GB1J473J	CHIP-COM 47K J 1/16W	
R1			RK73EB2B560J	CHIP R 56 J 1/8W	
R2			RK73EB2B471J	CHIP R 470 J 1/8W	
R3			RK73EB2B181J	CHIP R 180 J 1/8W	
R4			RK73GB1J222J	CHIP R 2.2K J 1/16W	
R5			RK73GB1J101J	CHIP R 100 J 1/16W	
R6,7			RK73FB2A101J	CHIP R 100 J 1/10W	
R8			RK73GB1J472J	CHIP R 4.7K J 1/16W	
R9			RK73GB1J471J	CHIP R 470 J 1/16W	
R10			RK73GB1J560J	CHIP R 56 J 1/16W	
R11-13			RK73FB2A560J	CHIP R 56 J 1/10W	
R14			RK73GB1J330J	CHIP R 33 J 1/16W	
R15,16			RK73FB2A560J	CHIP R 56 J 1/10W	
R17			RK73GB1J330J	CHIP R 33 J 1/16W	
R18,19			RK73FB2A560J	CHIP R 56 J 1/10W	
R20			RK73GB1J330J	CHIP R 33 J 1/16W	
R21,22			RK73FB2A560J	CHIP R 56 J 1/10W	
R23			RK73GB1J330J	CHIP R 33 J 1/16W	
R24,25			RK73FB2A560J	CHIP R 56 J 1/10W	
R26			RK73GB1J330J	CHIP R 33 J 1/16W	
R27,28			RK73FB2A560J	CHIP R 56 J 1/10W	
R29			RK73GB1J330J	CHIP R 33 J 1/16W	
R30,31			RK73FB2A560J	CHIP R 56 J 1/10W	
R32			RK73GB1J330J	CHIP R 33 J 1/16W	
R33,34			RK73FB2A560J	CHIP R 56 J 1/10W	
R35			RK73GB1J330J	CHIP R 33 J 1/16W	
R36,37			RK73FB2A560J	CHIP R 56 J 1/10W	
R38			RK73GB1J330J	CHIP R 33 J 1/16W	
R39,40			RK73FB2A560J	CHIP R 56 J 1/10W	
R41			RK73GB1J330J	CHIP R 33 J 1/16W	
R42			RK73FB2A560J	CHIP R 56 J 1/10W	
R43			RK73GB1J330J	CHIP R 33 J 1/16W	
R44,45			RK73FB2A560J	CHIP R 56 J 1/10W	
R46			RK73GB1J151J	CHIP R 150 J 1/16W	
R47			RK73GB1J562J	CHIP R 5.6K J 1/16W	
R48			RK73GB1J471J	CHIP R 470 J 1/16W	
R49			RK73GB1J102J	CHIP R 1.0K J 1/16W	
R50,51			RK73GB1J681J	CHIP R 680 J 1/16W	

Ref. No.	Address	New parts	Parts No.	Description	Destination
R52			R92-1252-05	CHIP R 0 OHM	
R53,54			RK73GB1J100J	CHIP R 10 J 1/16W	
R55			RK73GB1J271J	CHIP R 270 J 1/16W	
R56,57			RK73GB1J100J	CHIP R 10 J 1/16W	
R58			RK73GB1J682J	CHIP R 6.8K J 1/16W	
R59			RK73FB2A100J	CHIP R 10 J 1/10W	
R60			RK73GB1J471J	CHIP R 470 J 1/16W	
R61			RK73GB1J151J	CHIP R 150 J 1/16W	
R62			RK73GB1J331J	CHIP R 330 J 1/16W	
R63			RK73GB1J681J	CHIP R 680 J 1/16W	
R64			RK73GB1J103J	CHIP R 10K J 1/16W	
R65			RK73FB2A100J	CHIP R 10 J 1/10W	
R68			RK73GB1J331J	CHIP R 330 J 1/16W	
R69			RK73GB1J180J	CHIP R 18 J 1/16W	
R70			RK73GB1J331J	CHIP R 330 J 1/16W	
R71			RK73GB1J151J	CHIP R 150 J 1/16W	
R72			R92-1252-05	CHIP R 0 OHM	
R73			RK73GB1J102J	CHIP R 1.0K J 1/16W	
R74			RK73GB1J100J	CHIP R 10 J 1/16W	
R75			RK73GB1J680J	CHIP R 68 J 1/16W	
R76			RK73GB1J180J	CHIP R 18 J 1/16W	
R77			RK73GB1J182J	CHIP R 1.8K J 1/16W	
R78			RK73GB1J102J	CHIP R 1.0K J 1/16W	
R79			RK73GB1J471J	CHIP R 470 J 1/16W	
R80			RK73GB1J103J	CHIP R 10K J 1/16W	
R81			RK73GB1J560J	CHIP R 56 J 1/16W	
R82			RK73GB1J103J	CHIP R 10K J 1/16W	
R83-86			RK73GB1J471J	CHIP R 470 J 1/16W	
R87			RK73GB1J222J	CHIP R 2.2K J 1/16W	
R88,89			RK73GB1J471J	CHIP R 470 J 1/16W	
R90			RK73GB1J273J	CHIP R 27K J 1/16W	
R91			RK73GB1J471J	CHIP R 470 J 1/16W	
R92			RK73GB1J823J	CHIP R 82K J 1/16W	
R93			RK73GB1J100J	CHIP R 10 J 1/16W	
R94			RK73GB1J101J	CHIP R 100 J 1/16W	
R95			RK73GB1J102J	CHIP R 1.0K J 1/16W	
R96			R92-1252-05	CHIP R 0 OHM	
R97			RK73GB1J682J	CHIP R 6.8K J 1/16W	
R98			R92-1252-05	CHIP R 0 OHM	
R99,100			RK73GB1J222J	CHIP R 2.2K J 1/16W	
R101			RK73GB1J102J	CHIP R 1.0K J 1/16W	
R102			RK73FB2A100J	CHIP R 10 J 1/10W	
R103			RK73GB1J682J	CHIP R 6.8K J 1/16W	
R104			RK73GB1J221J	CHIP R 220 J 1/16W	
R105			RK73GB1J821J	CHIP R 820 J 1/16W	
R106,107			RK73GB1J102J	CHIP R 1.0K J 1/16W	
R108			RK73GB1J101J	CHIP R 100 J 1/16W	
R110			RK73GB1J104J	CHIP R 100K J 1/16W	
R111			RK73GB1J222J	CHIP R 2.2K J 1/16W	
R113			RK73GB1J471J	CHIP R 470 J 1/16W	
R114			RK73GB1J222J	CHIP R 2.2K J 1/16W	
R115			RK73GB1J101J	CHIP R 100 J 1/16W	
R119			RK73GB1J104J	CHIP R 100K J 1/16W	
R121			RK73GB1J103J	CHIP R 10K J 1/16W	
R122			RK73GB1J151J	CHIP R 150 J 1/16W	
R123			RK73GB1J471J	CHIP R 470 J 1/16W	
R124			RK73GB1J122J	CHIP R 1.2K J 1/16W	
R126			R92-1252-05	CHIP R 0 OHM	
R127			RK73GB1J122J	CHIP R 1.2K J 1/16W	
R128			RK73GB1J152J	CHIP R 1.5K J 1/16W	

K : TS-2000 (K) **KX : TS-2000X (K)**
E : TS-2000 (E) **E2 : TS-2000 (E2)**

PARTS LIST

TX-RX 1 UNIT (X57-605X-XX)

Ref. No.	Address	New parts	Parts No.	Description	Destination
R131			RK73GB1J101J	CHIP R 100 J 1/16W	
R132			R92-1252-05	CHIP R 0 OHM	
R133			RK73GB1J101J	CHIP R 100 J 1/16W	
R135			R92-1252-05	CHIP R 0 OHM	
R137			RK73GB1J681J	CHIP R 680 J 1/16W	
R138			RK73GB1J152J	CHIP R 1.5K J 1/16W	
R139			RK73GB1J101J	CHIP R 100 J 1/16W	
R141			RK73GB1J681J	CHIP R 680 J 1/16W	
R142			R92-1252-05	CHIP R 0 OHM	
R143			RK73GB1J681J	CHIP R 680 J 1/16W	
R144,145			RK73GB1J152J	CHIP R 1.5K J 1/16W	
R146			RK73GB1J101J	CHIP R 100 J 1/16W	
R147			RK73GB1J681J	CHIP R 680 J 1/16W	
R148			RK73GB1J821J	CHIP R 820 J 1/16W	
R149			RK73GB1J122J	CHIP R 1.2K J 1/16W	
R150			RK73GB1J681J	CHIP R 680 J 1/16W	
R151			RK73GB1J221J	CHIP R 220 J 1/16W	
R152			RK73GB1J102J	CHIP R 1.0K J 1/16W	
R153			RK73GB1J223J	CHIP R 22K J 1/16W	
R154			R92-1252-05	CHIP R 0 OHM	
R155			RK73GB1J223J	CHIP R 22K J 1/16W	
R157			RK73GB1J683J	CHIP R 68K J 1/16W	
R158,159			RK73GB1J103J	CHIP R 10K J 1/16W	
R160			RK73GB1J102J	CHIP R 1.0K J 1/16W	
R161			RK73GB1J152J	CHIP R 1.5K J 1/16W	
R162			RK73GB1J223J	CHIP R 22K J 1/16W	
R163			RK73GB1J221J	CHIP R 220 J 1/16W	
R165			RK73GB1J102J	CHIP R 1.0K J 1/16W	
R166			RK73GB1J563J	CHIP R 56K J 1/16W	
R167			RK73GB1J101J	CHIP R 100 J 1/16W	
R168			RK73GB1J681J	CHIP R 680 J 1/16W	
R169			RK73GB1J682J	CHIP R 6.8K J 1/16W	
R172			RK73GB1J104J	CHIP R 100K J 1/16W	
R173			RK73GB1J223J	CHIP R 22K J 1/16W	
R174			RK73GB1J471J	CHIP R 470 J 1/16W	
R175			RK73GB1J223J	CHIP R 22K J 1/16W	
R176			RK73GB1J822J	CHIP R 8.2K J 1/16W	
R177			RK73GB1J471J	CHIP R 470 J 1/16W	
R178			RK73GB1J560J	CHIP R 56 J 1/16W	
R179			RK73GB1J221J	CHIP R 220 J 1/16W	
R180			RK73GB1J274J	CHIP R 270K J 1/16W	
R181			RK73GB1J152J	CHIP R 1.5K J 1/16W	
R182			RK73GB1J273J	CHIP R 27K J 1/16W	
R183			RK73GB1J152J	CHIP R 1.5K J 1/16W	
R184			RK73GB1J101J	CHIP R 100 J 1/16W	
R185			RK73GB1J332J	CHIP R 3.3K J 1/16W	
R187			RK73GB1J101J	CHIP R 100 J 1/16W	
R188			RK73GB1J152J	CHIP R 1.5K J 1/16W	
R190			RK73GB1J332J	CHIP R 3.3K J 1/16W	
R191			RK73GB1J101J	CHIP R 100 J 1/16W	
R192			RK73GB1J332J	CHIP R 3.3K J 1/16W	
R194			RK73GB1J101J	CHIP R 100 J 1/16W	
R196			RK73GB1J332J	CHIP R 3.3K J 1/16W	
R197			RK73GB1J101J	CHIP R 100 J 1/16W	
R198			RK73GB1J332J	CHIP R 3.3K J 1/16W	
R200			RK73GB1J101J	CHIP R 100 J 1/16W	
R201			RK73GB1J103J	CHIP R 10K J 1/16W	
R202			RK73GB1J332J	CHIP R 3.3K J 1/16W	
R203,204			RK73GB1J154J	CHIP R 150K J 1/16W	
R205			RK73GB1J563J	CHIP R 56K J 1/16W	

Ref. No.	Address	New parts	Parts No.	Description	Destination
R206			RK73GB1J682J	CHIP R 6.8K J 1/16W	
R209			RK73GB1J470J	CHIP R 47 J 1/16W	
R210			RK73GB1J102J	CHIP R 1.0K J 1/16W	
R211,212			RK73GB1J103J	CHIP R 10K J 1/16W	
R213			RK73GB1J223J	CHIP R 22K J 1/16W	
R214			RK73GB1J122J	CHIP R 1.2K J 1/16W	
R215,216			RK73GB1J332J	CHIP R 3.3K J 1/16W	
R217			RK73GB1J104J	CHIP R 100K J 1/16W	
R219			RK73GB1J471J	CHIP R 470 J 1/16W	
R220			RK73GB1J223J	CHIP R 22K J 1/16W	
R221			RK73GB1J101J	CHIP R 100 J 1/16W	
R222			RK73GB1J222J	CHIP R 2.2K J 1/16W	
R223			RK73GB1J221J	CHIP R 220 J 1/16W	
R224			RK73GB1J682J	CHIP R 6.8K J 1/16W	
R225			RK73GB1J331J	CHIP R 330 J 1/16W	
R226			RK73GB1J152J	CHIP R 1.5K J 1/16W	
R227			R92-1252-05	CHIP R 0 OHM	
R228			RK73GB1J331J	CHIP R 330 J 1/16W	
R229			RK73GB1J101J	CHIP R 100 J 1/16W	
R230-232			RK73GB1J102J	CHIP R 1.0K J 1/16W	
R233			RK73GB1J154J	CHIP R 150K J 1/16W	
R234			RK73GB1J101J	CHIP R 100 J 1/16W	
R235			RK73GB1J124J	CHIP R 120K J 1/16W	
R236			RK73GB1J472J	CHIP R 4.7K J 1/16W	
R237			RK73GB1J471J	CHIP R 470 J 1/16W	
R240			RK73GB1J100J	CHIP R 10 J 1/16W	
R241			RK73GB1J223J	CHIP R 22K J 1/16W	
R242,243			RK73GB1J472J	CHIP R 4.7K J 1/16W	
R244			RK73GB1J331J	CHIP R 330 J 1/16W	
R245			RK73GB1J180J	CHIP R 18 J 1/16W	
R246			RK73GB1J331J	CHIP R 330 J 1/16W	
R247			RK73FB2A100J	CHIP R 10 J 1/10W	
R248			RK73GB1J221J	CHIP R 220 J 1/16W	
R249			RK73GB1J681J	CHIP R 680 J 1/16W	
R250			RK73GB1J103J	CHIP R 10K J 1/16W	
R252			RK73GB1J151J	CHIP R 150 J 1/16W	
R253			RK73GB1J101J	CHIP R 100 J 1/16W	
R254			RK73GB1J151J	CHIP R 150 J 1/16W	
R255			R92-1252-05	CHIP R 0 OHM	
R256			RK73GB1J681J	CHIP R 680 J 1/16W	
R257,258			R92-1252-05	CHIP R 0 OHM	
R259,260			RK73GB1J100J	CHIP R 10 J 1/16W	
R261,262			RK73GB1J330J	CHIP R 33 J 1/16W	
R263			RK73GB1J473J	CHIP R 47K J 1/16W	
R264			RK73GB1J104J	CHIP R 100K J 1/16W	
R265			RK73GB1J103J	CHIP R 10K J 1/16W	
R266,267			RK73GB1J330J	CHIP R 33 J 1/16W	
R268			RK73GB1J273J	CHIP R 27K J 1/16W	
R269			RK73GB1J102J	CHIP R 1.0K J 1/16W	
R270			RK73GB1J473J	CHIP R 47K J 1/16W	
R272-274			RK73GB1J104J	CHIP R 100K J 1/16W	
R275,276			RK73GB1J101J	CHIP R 100 J 1/16W	
R277,278			RK73GB1J331J	CHIP R 330 J 1/16W	
R279			RK73GB1J472J	CHIP R 4.7K J 1/16W	
R280,281			RK73GB1J330J	CHIP R 33 J 1/16W	
R282,283			RK73GB1J680J	CHIP R 68 J 1/16W	
R284			RK73GB1J103J	CHIP R 10K J 1/16W	
R285			RK73GB1J472J	CHIP R 4.7K J 1/16W	
R286			R92-1252-05	CHIP R 0 OHM	
R287,288			RK73GB1J102J	CHIP R 1.0K J 1/16W	

K : TS-2000 (K) **KX : TS-2000X (K)**
E : TS-2000 (E) **E2 : TS-2000 (E2)**

PARTS LIST

TX-RX 1 UNIT (X57-605X-XX)

Ref. No.	Address	New parts	Parts No.	Description				Destination
R289			RK73GB1J471J	CHIP R	470	J	1/16W	
R290			RK73GB1J151J	CHIP R	150	J	1/16W	
R291			RK73GB1J124J	CHIP R	120K	J	1/16W	
R292			RK73GB1J330J	CHIP R	33	J	1/16W	
R293			RK73GB1J681J	CHIP R	680	J	1/16W	
R294			RK73GB1J103J	CHIP R	10K	J	1/16W	
R295			RK73GB1J682J	CHIP R	6.8K	J	1/16W	
R296			RK73GB1J103J	CHIP R	10K	J	1/16W	
R297,298			RK73GB1J122J	CHIP R	1.2K	J	1/16W	
R299			RK73GB1J681J	CHIP R	680	J	1/16W	
R300			RK73GB1J223J	CHIP R	22K	J	1/16W	
R301			RK73GB1J561J	CHIP R	560	J	1/16W	
R302			RK73GB1J682J	CHIP R	6.8K	J	1/16W	
R303			RK73GB1J102J	CHIP R	1.0K	J	1/16W	
R304			RK73GB1J223J	CHIP R	22K	J	1/16W	
R305			RK73GB1J151J	CHIP R	150	J	1/16W	
R306			RK73GB1J103J	CHIP R	10K	J	1/16W	
R307			RK73GB1J681J	CHIP R	680	J	1/16W	
R308			RK73GB1J472J	CHIP R	4.7K	J	1/16W	
R309			RK73GB1J101J	CHIP R	100	J	1/16W	
R311			RK73GB1J223J	CHIP R	22K	J	1/16W	
R313			RK73GB1J681J	CHIP R	680	J	1/16W	
R315			RK73GB1J222J	CHIP R	2.2K	J	1/16W	
R316			RK73GB1J682J	CHIP R	6.8K	J	1/16W	
R317			RK73GB1J102J	CHIP R	1.0K	J	1/16W	
R319			RK73GB1J562J	CHIP R	5.6K	J	1/16W	
R320			RK73GB1J473J	CHIP R	47K	J	1/16W	
R321			RK73GB1J223J	CHIP R	22K	J	1/16W	
R322-324			RK73GB1J473J	CHIP R	47K	J	1/16W	
R325			RK73GB1J222J	CHIP R	2.2K	J	1/16W	
R326			RK73GB1J330J	CHIP R	33	J	1/16W	
R327			RK73GB1J102J	CHIP R	1.0K	J	1/16W	
R328			RK73GB1J122J	CHIP R	1.2K	J	1/16W	
R329			RK73GB1J182J	CHIP R	1.8K	J	1/16W	
R330			RK73GB1J681J	CHIP R	680	J	1/16W	
R331			RK73GB1J122J	CHIP R	1.2K	J	1/16W	
R332			RK73GB1J331J	CHIP R	330	J	1/16W	
R333			RK73GB1J471J	CHIP R	470	J	1/16W	
R334			RK73GB1J101J	CHIP R	100	J	1/16W	
R335			RK73GB1J102J	CHIP R	1.0K	J	1/16W	
R336			RK73GB1J222J	CHIP R	2.2K	J	1/16W	
R337			RK73GB1J224J	CHIP R	220K	J	1/16W	
R338			RK73GB1J331J	CHIP R	330	J	1/16W	
R339			RK73GB1J101J	CHIP R	100	J	1/16W	
R340			RK73GB1J274J	CHIP R	270K	J	1/16W	
R341			RD14BB2C103J	RD	10K	J	1/6W	
R342			RK73GB1J103J	CHIP R	10K	J	1/16W	
R343			RK73GB1J681J	CHIP R	680	J	1/16W	
R344			RK73GB1J223J	CHIP R	22K	J	1/16W	
R345			RK73GB1J332J	CHIP R	3.3K	J	1/16W	
R346			RK73GB1J681J	CHIP R	680	J	1/16W	
R347			RK73GB1J471J	CHIP R	470	J	1/16W	
R348			RK73GB1J332J	CHIP R	3.3K	J	1/16W	
R349			RK73GB1J101J	CHIP R	100	J	1/16W	
R350			RK73GB1J102J	CHIP R	1.0K	J	1/16W	
R351			RK73GB1J223J	CHIP R	22K	J	1/16W	
R352			RK73GB1J683J	CHIP R	68K	J	1/16W	
R355			RK73GB1J102J	CHIP R	1.0K	J	1/16W	
R356			RK73GB1J474J	CHIP R	470K	J	1/16W	
R359			RK73GB1J104J	CHIP R	100K	J	1/16W	

Ref. No.	Address	New parts	Parts No.	Description				Destination
R361			RK73GB1J103J	CHIP R	10K	J	1/16W	
R364			RK73GB1J473J	CHIP R	47K	J	1/16W	
R365			RK73GB1J273J	CHIP R	27K	J	1/16W	
R366			RK73GB1J271J	CHIP R	270	J	1/16W	
R367,368			RK73GB1J4R7J	CHIP R	4.7	J	1/16W	
R369			RK73GB1J271J	CHIP R	270	J	1/16W	
R370			RK73GB1J273J	CHIP R	27K	J	1/16W	
R371			RK73GB1J102J	CHIP R	1.0K	J	1/16W	
R372			RK73GB1J473J	CHIP R	47K	J	1/16W	
R373,374			RK73GB1J472J	CHIP R	4.7K	J	1/16W	
R375			RK73GB1J102J	CHIP R	1.0K	J	1/16W	
R376			RK73GB1J331J	CHIP R	330	J	1/16W	
R377			RK73GB1J104J	CHIP R	100K	J	1/16W	
R378			RK73GB1J331J	CHIP R	330	J	1/16W	
R379			RK73GB1J272J	CHIP R	2.7K	J	1/16W	
R380,381			RK73GB1J223J	CHIP R	22K	J	1/16W	
R382			RK73GB1J471J	CHIP R	470	J	1/16W	
R383			RK73GB1J223J	CHIP R	22K	J	1/16W	
R384,385			RK73GB1J101J	CHIP R	100	J	1/16W	
R386			RK73GB1J103J	CHIP R	10K	J	1/16W	
R387			RK73GB1J472J	CHIP R	4.7K	J	1/16W	
R391			RK73GB1J103J	CHIP R	10K	J	1/16W	
R392			RK73GB1J100J	CHIP R	10	J	1/16W	
R397			RK73GB1J104J	CHIP R	100K	J	1/16W	
R398,399			R92-1252-05	CHIP R	0 OHM			
R400			RK73GB1J103J	CHIP R	10K	J	1/16W	
R401-404			RK73GB1J101J	CHIP R	100	J	1/16W	
R405-408			RK73GB1J2R2J	CHIP R	2.2	J	1/16W	
R409,410			RK73GB1J104J	CHIP R	100K	J	1/16W	
R411			RK73GB1J822J	CHIP R	8.2K	J	1/16W	
R412			RK73GB1J222J	CHIP R	2.2K	J	1/16W	
R413			RK73GB1J103J	CHIP R	10K	J	1/16W	
R414			RK73GB1J153J	CHIP R	15K	J	1/16W	
R415,416			RK73GB1J102J	CHIP R	1.0K	J	1/16W	
R417			RK73GB1J222J	CHIP R	2.2K	J	1/16W	
R418,419			RK73GB1J331J	CHIP R	330	J	1/16W	
R420			RK73GB1J102J	CHIP R	1.0K	J	1/16W	
R421			RK73GB1J101J	CHIP R	100	J	1/16W	
R422			RK73GB1J104J	CHIP R	100K	J	1/16W	
R423			RK73GB1J153J	CHIP R	15K	J	1/16W	
R424			RK73GB1J222J	CHIP R	2.2K	J	1/16W	
R425			RK73GB1J332J	CHIP R	3.3K	J	1/16W	
R426			RK73GB1J104J	CHIP R	100K	J	1/16W	
R427			RK73GB1J332J	CHIP R	3.3K	J	1/16W	
R428			RK73GB1J822J	CHIP R	8.2K	J	1/16W	
R429			RK73GB1J100J	CHIP R	10	J	1/16W	
R430			R92-1252-05	CHIP R	0 OHM			
R431			RK73GB1J104J	CHIP R	100K	J	1/16W	
R432			R92-1252-05	CHIP R	0 OHM			
R433-435			RK73GB1J104J	CHIP R	100K	J	1/16W	
R438,439			RK73GB1J104J	CHIP R	100K	J	1/16W	
R440			RK73GB1J224J	CHIP R	220K	J	1/16W	
R442			RK73GB1J273J	CHIP R	27K	J	1/16W	
R443			R92-1252-05	CHIP R	0 OHM			
R444			RK73GB1J103J	CHIP R	10K	J	1/16W	
R445			RK73GB1J102J	CHIP R	1.0K	J	1/16W	
R446-448			RK73GB1J104J	CHIP R	100K	J	1/16W	
R449			RK73GB1J221J	CHIP R	220	J	1/16W	
R450			RK73GB1J102J	CHIP R	1.0K	J	1/16W	
R451			RK73GB1J272J	CHIP R	2.7K	J	1/16W	

K : TS-2000 (K) **KX : TS-2000X (K)**
E : TS-2000 (E) **E2 : TS-2000 (E2)**

PARTS LIST

TX-RX 1 UNIT (X57-605X-XX)

Ref. No.	Address	New parts	Parts No.	Description	Destination
R452,453			R92-1252-05	CHIP R 0 OHM	
R454,455			RK73GB1J101J	CHIP R 100 J 1/16W	
R460-475			RK73GB1J102J	CHIP R 1.0K J 1/16W	
R476			RK73GB1J563J	CHIP R 56K J 1/16W	
R477			RK73GB1J103J	CHIP R 10K J 1/16W	
R478			R92-1252-05	CHIP R 0 OHM	
R479			RK73GB1J473J	CHIP R 47K J 1/16W	
R480			RK73GB1J563J	CHIP R 56K J 1/16W	
R481			RK73GB1J103J	CHIP R 10K J 1/16W	
R482			RK73GB1J334J	CHIP R 330K J 1/16W	
R483			R92-1252-05	CHIP R 0 OHM	
R484			RK73GB1J474J	CHIP R 470K J 1/16W	
R485			RK73GB1J124J	CHIP R 120K J 1/16W	
R486			RK73GB1J224J	CHIP R 220K J 1/16W	
R487			RK73GB1J104J	CHIP R 100K J 1/16W	
R488			RK73GB1J101J	CHIP R 100 J 1/16W	
R489			RK73GB1J104J	CHIP R 100K J 1/16W	
R491,492			RK73GB1J102J	CHIP R 1.0K J 1/16W	
R493-496			RK73GB1J101J	CHIP R 100 J 1/16W	
R497-499			RK73GB1J471J	CHIP R 470 J 1/16W	
R500-502			RK73GB1J104J	CHIP R 100K J 1/16W	
R503,504			RK73GB1J101J	CHIP R 100 J 1/16W	
R505			RK73GB1J151J	CHIP R 150 J 1/16W	
R506,507			RK73GB1J101J	CHIP R 100 J 1/16W	
R508			RK73GB1J123J	CHIP R 12K J 1/16W	
R509			RK73GB1J103J	CHIP R 10K J 1/16W	
R601			RK73GB1J101J	CHIP R 100 J 1/16W	
R602			RK73GB1J823J	CHIP R 82K J 1/16W	
R603			RK73GB1J561J	CHIP R 560 J 1/16W	
R604			RK73GB1J392J	CHIP R 3.9K J 1/16W	
R605			RK73GB1J331J	CHIP R 330 J 1/16W	
R607			RK73GB1J822J	CHIP R 8.2K J 1/16W	
R608			RK73GB1J153J	CHIP R 15K J 1/16W	
R609			RK73GB1J181J	CHIP R 180 J 1/16W	
R610			RK73GB1J221J	CHIP R 220 J 1/16W	
R611			RK73GB1J101J	CHIP R 100 J 1/16W	
R612			RK73GB1J823J	CHIP R 82K J 1/16W	
R613			RK73GB1J561J	CHIP R 560 J 1/16W	
R614			RK73GB1J392J	CHIP R 3.9K J 1/16W	
R615			RK73GB1J331J	CHIP R 330 J 1/16W	
R616			RK73GB1J101J	CHIP R 100 J 1/16W	
R617			RK73GB1J822J	CHIP R 8.2K J 1/16W	
R618			RK73GB1J153J	CHIP R 15K J 1/16W	
R619			RK73GB1J181J	CHIP R 180 J 1/16W	
R621			RK73GB1J101J	CHIP R 100 J 1/16W	
R622			RK73GB1J823J	CHIP R 82K J 1/16W	
R623			RK73GB1J561J	CHIP R 560 J 1/16W	
R624			RK73GB1J392J	CHIP R 3.9K J 1/16W	
R625			RK73GB1J331J	CHIP R 330 J 1/16W	
R626			RK73GB1J101J	CHIP R 100 J 1/16W	
R627			RK73GB1J822J	CHIP R 8.2K J 1/16W	
R628			RK73GB1J153J	CHIP R 15K J 1/16W	
R629			RK73GB1J181J	CHIP R 180 J 1/16W	
R630			RK73GB1J221J	CHIP R 220 J 1/16W	
R631			RK73GB1J103J	CHIP R 10K J 1/16W	
R632-639			RK73GB1J331J	CHIP R 330 J 1/16W	
R640			RK73GB1J222J	CHIP R 2.2K J 1/16W	
R641			RK73GB1J101J	CHIP R 100 J 1/16W	
R642			RK73GB1J222J	CHIP R 2.2K J 1/16W	
R643,644			RK73GB1J102J	CHIP R 1.0K J 1/16W	

Ref. No.	Address	New parts	Parts No.	Description	Destination
R700			RK73GB1J101J	CHIP R 100 J 1/16W	
R701			RK73GB1J103J	CHIP R 10K J 1/16W	
R702,703			RK73GB1J471J	CHIP R 470 J 1/16W	
R704			RK73GB1J473J	CHIP R 47K J 1/16W	
R707-710			RK73GB1J472J	CHIP R 4.7K J 1/16W	
R711			RK73GB1J103J	CHIP R 10K J 1/16W	
R712,713			RK73GB1J101J	CHIP R 100 J 1/16W	
R714,715			RK73GB1J471J	CHIP R 470 J 1/16W	
R717,718			RK73GB1J104J	CHIP R 100K J 1/16W	
R719			RK73GB1J393J	CHIP R 39K J 1/16W	
R720			RK73GB1J102J	CHIP R 1.0K J 1/16W	
R721			RK73GB1J101J	CHIP R 100 J 1/16W	
R722			RK73GB1J471J	CHIP R 470 J 1/16W	
R725			RK73GB1J562J	CHIP R 5.6K J 1/16W	
R727			RK73GB1J121J	CHIP R 120 J 1/16W	
R728			RK73GB1J471J	CHIP R 470 J 1/16W	
R729			RK73GB1J221J	CHIP R 220 J 1/16W	
R731			RK73GB1J102J	CHIP R 1.0K J 1/16W	
R732			RK73GB1J103J	CHIP R 10K J 1/16W	
R733			RK73GB1J472J	CHIP R 4.7K J 1/16W	
R734			R92-1252-05	CHIP R 0 OHM	
R735			RK73GB1J104J	CHIP R 100K J 1/16W	
R736			RK73GB1J473J	CHIP R 47K J 1/16W	
R737			RK73GB1J472J	CHIP R 4.7K J 1/16W	
R738			RK73GB1J182J	CHIP R 1.8K J 1/16W	
R739,740			RK73GB1J103J	CHIP R 10K J 1/16W	
R741			RK73GB1J151J	CHIP R 150 J 1/16W	
R742			RK73GB1J331J	CHIP R 330 J 1/16W	
R743,744			RK73GB1J103J	CHIP R 10K J 1/16W	
R745			RK73FB2A100J	CHIP R 10 J 1/10W	
R747			RK73GB1J103J	CHIP R 10K J 1/16W	
R748			RK73GB1J331J	CHIP R 330 J 1/16W	
R749			RK73GB1J180J	CHIP R 18 J 1/16W	
R750			RK73GB1J331J	CHIP R 330 J 1/16W	
R751			RK73GB1J151J	CHIP R 150 J 1/16W	
R752			RK73GB1J223J	CHIP R 22K J 1/16W	
R753			RK73GB1J564J	CHIP R 560K J 1/16W	
R754			RK73GB1J222J	CHIP R 2.2K J 1/16W	
R755			R92-1252-05	CHIP R 0 OHM	
R756			RK73GB1J393J	CHIP R 39K J 1/16W	
R757			RK73GB1J333J	CHIP R 33K J 1/16W	
R758			RK73GB1J103J	CHIP R 10K J 1/16W	
R759			R92-1252-05	CHIP R 0 OHM	
R760			RK73GB1J102J	CHIP R 1.0K J 1/16W	
R761			R92-1252-05	CHIP R 0 OHM	
R762			RK73GB1J222J	CHIP R 2.2K J 1/16W	
R763			RK73GB1J101J	CHIP R 100 J 1/16W	
R764			RK73GB1J152J	CHIP R 1.5K J 1/16W	
R765			RK73GB1J182J	CHIP R 1.8K J 1/16W	
R766			RK73GB1J221J	CHIP R 220 J 1/16W	
R767			RK73GB1J103J	CHIP R 10K J 1/16W	
R768			RK73GB1J471J	CHIP R 470 J 1/16W	
R769			RK73GB1J223J	CHIP R 22K J 1/16W	
R770			RK73GB1J472J	CHIP R 4.7K J 1/16W	
R771			RK73GB1J104J	CHIP R 100K J 1/16W	
R772			RK73GB1J684J	CHIP R 680K J 1/16W	
R773			RK73GB1J391J	CHIP R 390 J 1/16W	
R774			RK73GB1J101J	CHIP R 100 J 1/16W	
R775			RK73GB1J392J	CHIP R 3.9K J 1/16W	
R776			RK73GB1J562J	CHIP R 5.6K J 1/16W	

K : TS-2000 (K) **KX : TS-2000X (K)**
E : TS-2000 (E) **E2 : TS-2000 (E2)**

PARTS LIST

TX-RX 1 UNIT (X57-605X-XX)

Ref. No.	Address	New parts	Parts No.	Description	Destination
R777			RK73GB1J473J	CHIP R 47K J 1/16W	
R778			RK73GB1J184J	CHIP R 180K J 1/16W	
R779			RK73GB1J102J	CHIP R 1.0K J 1/16W	
R780			RK73GB1J101J	CHIP R 100 J 1/16W	
R781			RK73GB1J152J	CHIP R 1.5K J 1/16W	
R782			RK73GB1J124J	CHIP R 120K J 1/16W	
R783			RK73GB1J471J	CHIP R 470 J 1/16W	
R785,786			RK73GB1J2R2J	CHIP R 2.2 J 1/16W	
R787			RK73FB2A473J	CHIP R 47K J 1/10W	
R800			RK73FB2A681J	CHIP R 680 J 1/10W	
R801			RK73FB2A222J	CHIP R 2.2K J 1/10W	
R802			RK73FB2A681J	CHIP R 680 J 1/10W	
R803			RK73FB2A102J	CHIP R 1.0K J 1/10W	
R804			RK73FB2A681J	CHIP R 680 J 1/10W	
R805			RK73FB2A682J	CHIP R 6.8K J 1/10W	
R806			RK73FB2A681J	CHIP R 680 J 1/10W	
R807			RK73FB2A102J	CHIP R 1.0K J 1/10W	
R808			RK73FB2A681J	CHIP R 680 J 1/10W	
R809			RK73FB2A222J	CHIP R 2.2K J 1/10W	
R818-822			RK73GB1J101J	CHIP R 100 J 1/16W	
R823			R92-1252-05	CHIP R 0 OHM	
R824			R92-0670-05	CHIP R 0 OHM	
R841			RK73GB1J473J	CHIP R 47K J 1/16W	
R842			R92-1252-05	CHIP R 0 OHM	
R846-853			RK73GB1J101J	CHIP R 100 J 1/16W	
R855-862			RK73GB1J101J	CHIP R 100 J 1/16W	
R864			RK73GB1J101J	CHIP R 100 J 1/16W	
R867-871			RK73FB2A680J	CHIP R 68 J 1/10W	
R872			RK73GB1J103J	CHIP R 10K J 1/16W	
R873			RK73GB1J101J	CHIP R 100 J 1/16W	
R874			RK73GB1J103J	CHIP R 10K J 1/16W	
R875			RK73GB1J101J	CHIP R 100 J 1/16W	
R876			RK73GB1J103J	CHIP R 10K J 1/16W	
R877			RK73GB1J101J	CHIP R 100 J 1/16W	
R878			RK73GB1J103J	CHIP R 10K J 1/16W	
R879-881			RK73GB1J101J	CHIP R 100 J 1/16W	
R884,885			RK73GB1J103J	CHIP R 10K J 1/16W	
R886			RK73GB1J473J	CHIP R 47K J 1/16W	
R887-898			RK73GB1J101J	CHIP R 100 J 1/16W	
R899			RK73FB2A680J	CHIP R 68 J 1/10W	
R950,951			R92-1205-05	CHIP R 120 J 1/4W	
R952-955			RK73FB2A470J	CHIP R 47 J 1/10W	
R956-960			RK73FB2A681J	CHIP R 680 J 1/10W	
R962			RK73GB1J473J	CHIP R 47K J 1/16W	
R964			RK73GB1J473J	CHIP R 47K J 1/16W	
VR1			R12-6711-05	TRIMMING POT. (4.7K)	
VR2			R12-6707-05	TRIMMING POT. (1.0K)	
VR3			R12-6717-05	TRIMMING POT. (47K)	
VR4			R12-6711-05	TRIMMING POT. (4.7K)	
VR950		*	R31-0633-05	VARIABLE RESISTOR	
VR951		*	R31-0637-05	VARIABLE RESISTOR	
VR952		*	R31-0634-05	VARIABLE RESISTOR	
K1,2			S51-1428-05	RELAY	
K3		*	S76-0423-05	RELAY	
S1			S62-0412-05	SLIDE SWITCH	
S800-842		*	S70-0475-05	TACT SWITCH	
D1			LFB01	DIODE	
D2			DSP-301N	SURGE ABSORBER	
D3			LFB01	DIODE	

Ref. No.	Address	New parts	Parts No.	Description	Destination
D4			RLS245	DIODE	
D5			V08(G)	DIODE	
D6			RLS245	DIODE	
D7,8			RN731V	DIODE	
D9			V08(G)	DIODE	
D10			LFB01	DIODE	
D11,12			RN731V	DIODE	
D13			LFB01	DIODE	
D14			RN731V	DIODE	
D15			LFB01	DIODE	
D16			RN731V	DIODE	
D17			LFB01	DIODE	
D18			RN731V	DIODE	
D19			LFB01	DIODE	
D20			RN731V	DIODE	
D21			LFB01	DIODE	
D22			RN731V	DIODE	
D23			LFB01	DIODE	
D24			RN731V	DIODE	
D25,26			LFB01	DIODE	
D27			RN731V	DIODE	
D28			LFB01	DIODE	
D29			RN731V	DIODE	
D30			LFB01	DIODE	
D31			RN731V	DIODE	
D32			LFB01	DIODE	
D33			RN731V	DIODE	
D34-36			LFB01	DIODE	
D38,39			LFB01	DIODE	
D40-42			DAN235E	DIODE	
D45,46			DAN235E	DIODE	
D47			HSC277	DIODE	
D48			DAN202U	DIODE	
D49,50			HSC277	DIODE	
D52,53			HSC277	DIODE	
D55-58			HSC277	DIODE	
D60-62			HSC277	DIODE	
D64			HSC277	DIODE	
D65			DAN202U	DIODE	
D66			RB706F-40	DIODE	
D67-69			MA2S111	DIODE	
D70,71			DAP202U	DIODE	
D73			MA2S111	DIODE	
D75			LFB01	DIODE	
D76-79			HVC350B	VARIABLE CAPACITANCE DIODE	
D80			DAN235E	DIODE	
D81			HSC277	DIODE	
D82			RN739D	DIODE	
D83			DAN202U	DIODE	
D84			RN739D	DIODE	
D85			MA2S111	DIODE	
D87-89			MA2S111	DIODE	
D90			DAN235E	DIODE	
D91			HVC350B	VARIABLE CAPACITANCE DIODE	
D92-95			DAN202U	DIODE	
D96			UDZ6.2(B)	ZENER DIODE	
D97			1SS226	DIODE	
D98			LFB01	DIODE	
D99			DAN202U	DIODE	
D100			02DZ5.1(Y)	ZENER DIODE	

K : TS-2000 (K) **KX : TS-2000X (K)**
E : TS-2000 (E) **E2 : TS-2000 (E2)**

PARTS LIST

TX-RX 1 UNIT (X57-605X-XX)

Ref. No.	Address	New parts	Parts No.	Description	Destination
D101		*	MINISMDC050-02	VARISTOR	
D102			UDZ10(B)	ZENER DIODE	
D103,104			DAP202U	DIODE	
D106			MA2S111	DIODE	
D107			UDZ10(B)	ZENER DIODE	
D108			DTZ3.3(A)	ZENER DIODE	
D109,110			DAP202U	DIODE	
D111			MA2S111	DIODE	
D112-114			02DZ5.1(Y)	ZENER DIODE	
D115,116			RB751V-40	DIODE	
D117,118			MA2S111	DIODE	
D119-124			RB751V-40	DIODE	
D130			XB15A204	DIODE	
D700			1SS355	DIODE	
D701,702			DAN202U	DIODE	
D703			HVC350B	VARIABLE CAPACITANCE DIODE	
D704,705			LFB01	DIODE	
D706			DAN202U	DIODE	
D707			MA742	DIODE	
D708			MA2S111	DIODE	
D709			DTZ3.9(B)	ZENER DIODE	
D710,711			MA2S111	DIODE	
D712,713			DA221	DIODE	
D714			MA2S077	DIODE	
D715			HVC350B	VARIABLE CAPACITANCE DIODE	
D716			MA2S111	DIODE	
D717			DAP202U	DIODE	
D719,720			02DZ5.1(Y)	ZENER DIODE	
D721			MA729	DIODE	
D805-809			1SS355	DIODE	
D950-952			1SS355	DIODE	
IC1			TA31136FN	IC	
IC2			NJM2904M	IC	
IC3			TC74HC4053AFT	IC	
IC4			NJM2904M	IC	
IC5			BU2099FV	IC	
IC6		*	TA4101F	IC	
IC7			TC4W53FU	IC	
IC8			BU4066BCFV	IC	
IC9			LA4446	IC	
IC10			ADM202EARU	IC	
IC10			ADM3202ARU	IC	
IC11			TC74HC4050AFT	IC	
IC12			NJM2902M	IC	
IC13			NJM2904M	IC	
IC14			M62363FP	IC	
IC15			M62364FP	IC	
IC16,17			BU2099FV	IC	
IC18			NJM5532M	IC	
IC19			NJM2904M	IC	
IC601-603			AD9835BRU	IC	
IC604			TC7S04FU	IC	
IC605			NJM78L08UA	IC	
IC801		*	30624FGAGJYDAK	IC	
Q1			DTC114EKA	DIGITAL TRANSISTOR	
Q2			2SB1188(Q,R)	TRANSISTOR	
Q3			DTC114EKA	DIGITAL TRANSISTOR	
Q4,5		*	DTA124EKA	DIGITAL TRANSISTOR	
Q6			DTA114EKA	DIGITAL TRANSISTOR	
Q7-10			2SK520(K44)	FET	

Ref. No.	Address	New parts	Parts No.	Description	Destination
Q11			DTA124EKA	DIGITAL TRANSISTOR	
Q12			2SK2596	FET	
Q13			2SC3357	TRANSISTOR	
Q14			2SB1132(Q,R)	TRANSISTOR	
Q15			FMG1	DIGITAL TRANSISTOR	
Q16,17		*	DTA124EKA	DIGITAL TRANSISTOR	
Q18			3SK131(M)	FET	
Q19,20			2SK520(K43)	FET	
Q21			FMG1	DIGITAL TRANSISTOR	
Q22			2SC4617(R)	TRANSISTOR	
Q25			3SK131(M)	FET	
Q26			UMW1	TRANSISTOR	
Q27			2SC4617(R)	TRANSISTOR	
Q28			2SC4617(Q)	TRANSISTOR	
Q29			2SC4617(R)	TRANSISTOR	
Q30			2SC4617(Q)	TRANSISTOR	
Q31			DTA114EKA	DIGITAL TRANSISTOR	
Q32			2SC4617(R)	TRANSISTOR	
Q33			FMG1	DIGITAL TRANSISTOR	
Q34		*	DTA124EKA	DIGITAL TRANSISTOR	
Q37			UMC2N	TRANSISTOR	
Q38			3SK131(M)	FET	
Q40			DTC114EKA	DIGITAL TRANSISTOR	
Q41,42			2SC4617(R)	TRANSISTOR	
Q43			2SK2596	FET	
Q44,45			3SK241(R)	FET	
Q46,47			3SK131(M)	FET	
Q48			2SC4617(R)	TRANSISTOR	
Q49			3SK131(M)	FET	
Q51			UMC2N	TRANSISTOR	
Q52			2SC4617(R)	TRANSISTOR	
Q53			UMC2N	TRANSISTOR	
Q54			2SC4617(R)	TRANSISTOR	
Q57			DTA114EKA	DIGITAL TRANSISTOR	
Q58			UMW1	TRANSISTOR	
Q59			2SC4617(R)	TRANSISTOR	
Q60			DTC114EKA	DIGITAL TRANSISTOR	
Q61,62			2SC4617(R)	TRANSISTOR	
Q63			UMW1	TRANSISTOR	
Q64			2SA1037K(R)	TRANSISTOR	
Q65			2SB1188(Q,R)	TRANSISTOR	
Q66,67			DTC114EKA	DIGITAL TRANSISTOR	
Q69			2SC4617(R)	TRANSISTOR	
Q70			2SB1132(Q,R)	TRANSISTOR	
Q71,72			FMG1	DIGITAL TRANSISTOR	
Q73,74			2SC4617(Q)	TRANSISTOR	
Q75			DTC114EKA	DIGITAL TRANSISTOR	
Q76,77			2SC4617(Q)	TRANSISTOR	
Q78			2SK208(Y)	FET	
Q79			2SC4617(Q)	TRANSISTOR	
Q80			2SB1188(Q,R)	TRANSISTOR	
Q81			FMG1	DIGITAL TRANSISTOR	
Q82,83			2SB1188(Q,R)	TRANSISTOR	
Q84			FMG1	DIGITAL TRANSISTOR	
Q85,86			2SB1188(Q,R)	TRANSISTOR	
Q87			FMG1	DIGITAL TRANSISTOR	
Q88,89			2SB1188(Q,R)	TRANSISTOR	
Q90			FMG1	DIGITAL TRANSISTOR	
Q91			2SB1188(Q,R)	TRANSISTOR	
Q92			FMG1	DIGITAL TRANSISTOR	

K : TS-2000 (K) **KX : TS-2000X (K)**
E : TS-2000 (E) **E2 : TS-2000 (E2)**

PARTS LIST

TX-RX 1 UNIT (X57-605X-XX)
TX-RX 2 UNIT (X57-606X-XX)

Ref. No.	Address	New parts	Parts No.	Description	Destination
Q93-95			2SC4617(R)	TRANSISTOR	
Q96			FMG1	DIGITAL TRANSISTOR	
Q97			2SD1624(S)	TRANSISTOR	
Q101-112			DTA114EKA	DIGITAL TRANSISTOR	
Q601-606			2SC4617(R)	TRANSISTOR	
Q607,608			DTC114EKA	DIGITAL TRANSISTOR	
Q609			DTC124EKA	DIGITAL TRANSISTOR	
Q700,701			3SK131(M)	FET	
Q702,703			DTC114EKA	DIGITAL TRANSISTOR	
Q704			DTC124EKA	DIGITAL TRANSISTOR	
Q705			2SK2596	FET	
Q706			2SB1132(Q,R)	TRANSISTOR	
Q707,708			FMG1	DIGITAL TRANSISTOR	
Q709			2SC4617(Q)	TRANSISTOR	
Q710			2SC4617(S)	TRANSISTOR	
Q711			2SC4617(R)	TRANSISTOR	
Q712			DTC124EKA	DIGITAL TRANSISTOR	
Q714			DTC124EKA	DIGITAL TRANSISTOR	
Q715			2SC4617(R)	TRANSISTOR	
Q800			DTC114EE	DIGITAL TRANSISTOR	
Q801			2SA1641(S,T)	TRANSISTOR	
Q802			DTC114EE	DIGITAL TRANSISTOR	
Q803			2SC2712(Y)	TRANSISTOR	
Q804			DTC114EE	DIGITAL TRANSISTOR	
Q805			2SA1162(Y)	TRANSISTOR	
Q806			DTC114EE	DIGITAL TRANSISTOR	
Q808			DTC114EE	DIGITAL TRANSISTOR	
Q811			DTC114EE	DIGITAL TRANSISTOR	
Q813			DTC114EE	DIGITAL TRANSISTOR	
Q815			DTC114EE	DIGITAL TRANSISTOR	
Q817			DTC114EE	DIGITAL TRANSISTOR	
Q819,820			DTC114EE	DIGITAL TRANSISTOR	
Q822			DTC114EE	DIGITAL TRANSISTOR	
TH1,2			157-502-65001	THERMISTOR	
TH3			157-302-65801	THERMISTOR	
TH5,6			157-302-65801	THERMISTOR	
TH7,8			157-102-65001	THERMISTOR	
TH9			157-502-65001	THERMISTOR	
S902		*	W02-1985-05	ENCODER	
S903		*	W02-1988-05	ENCODER	
S904		*	W02-1989-05	ENCODER	

TX-RX 2 UNIT (X57-606X-XX) 0-11 : K,KX 2-71 : E,E2

C1			CC73GCH1H120J	CHIP C	12PF	J	
C2			CC73GCH1H0R5B	CHIP C	0.5PF	B	
C3			CC73GCH1H040B	CHIP C	4.0PF	B	
C4			CC73GCH1H070B	CHIP C	7.0PF	B	
C5			CK73GB1H102K	CHIP C	1000PF	K	
C6			CC73GCH1H120J	CHIP C	12PF	J	
C8			CC73GCH1H120J	CHIP C	12PF	J	E,E2
C8			CC73GCH1H220J	CHIP C	22PF	J	K,KX
C9-13			CK73GB1H102K	CHIP C	1000PF	K	
C14			CK73GB1H471K	CHIP C	470PF	K	
C15			CK73GB1H102K	CHIP C	1000PF	K	
C16			CK73GB1H471K	CHIP C	470PF	K	
C18,19			CK73GB1H102K	CHIP C	1000PF	K	
C21			CK73GB1H471K	CHIP C	470PF	K	
C22			CK73GB1H102K	CHIP C	1000PF	K	
C23,24			CK73GB1H471K	CHIP C	470PF	K	
C25,26			CC73GCH1H101J	CHIP C	100PF	J	
C27			CK73GB1H471K	CHIP C	470PF	K	
C28			CK73GB1H102K	CHIP C	1000PF	K	
C29			CK73GB1H471K	CHIP C	470PF	K	
C30			CK73GB1C104K	CHIP C	0.10UF	K	
C31,32			CK73GB1H102K	CHIP C	1000PF	K	
C33			CK73GB1H471K	CHIP C	470PF	K	
C34			CK73GB1H102K	CHIP C	1000PF	K	
C35			CK73GB1H103K	CHIP C	0.010UF	K	
C36,37			CK73GB1H102K	CHIP C	1000PF	K	
C39			CK73GB1H471K	CHIP C	470PF	K	
C40			CK73GB1H102K	CHIP C	1000PF	K	
C41			C92-0625-05	ELECTRO	4.7UF	25WV	
C42			CK73GB1H102K	CHIP C	1000PF	K	
C43			CK73GB1H471K	CHIP C	470PF	K	
C44,45			CK73GB1H102K	CHIP C	1000PF	K	
C46			CK73GB1H471K	CHIP C	470PF	K	
C47			CC73GCH1HR75B	CHIP C	0.75PF	B	
C48			CK73GB1H103K	CHIP C	0.010UF	K	
C49-51			CK73GB1H102K	CHIP C	1000PF	K	
C52			CC73GCH1H040B	CHIP C	4.0PF	B	
C53			C92-0625-05	ELECTRO	4.7UF	25WV	
C54			CK73GB1H102K	CHIP C	1000PF	K	
C55			CK73GB1H471K	CHIP C	470PF	K	
C56			CK73GB1H102K	CHIP C	1000PF	K	
C57			CK73GB1H471K	CHIP C	470PF	K	
C58,59			CK73GB1H102K	CHIP C	1000PF	K	
C60,61			CK73GB1H471K	CHIP C	470PF	K	
C62			CK73GB1H102K	CHIP C	1000PF	K	
C63			CC73GCH1H080B	CHIP C	8.0PF	B	
C64			CK73GB1H102K	CHIP C	1000PF	K	
C65			CC73GCH1H390J	CHIP C	39PF	J	
C66			CC73GCH1H010B	CHIP C	1.0PF	B	
C67			CC73GCH1H100D	CHIP C	10PF	D	
C68			CK73GB1H471K	CHIP C	470PF	K	
C69			CC73GCH1H080B	CHIP C	8.0PF	B	
C70			CC73GCH1H120J	CHIP C	12PF	J	
C71			CK73GB1H102K	CHIP C	1000PF	K	
C73			CK73GB1H103K	CHIP C	0.010UF	K	
C74,75			CK73GB1H102K	CHIP C	1000PF	K	
C76			CC73GCH1H070B	CHIP C	7.0PF	B	
C77			CC73GCH1H0R3B	CHIP C	0.3PF	B	
C78			CK73GB1H471K	CHIP C	470PF	K	
C79			CC73GCH1H050B	CHIP C	5.0PF	B	
C80			CK73GB1H102K	CHIP C	1000PF	K	
C81			CK73GB1H471K	CHIP C	470PF	K	
C82			CK73GB1H102K	CHIP C	1000PF	K	
C83			CC73GCH1H040B	CHIP C	4.0PF	B	
C84			CC73GCH1H150J	CHIP C	15PF	J	
C85			CK73GB1H102K	CHIP C	1000PF	K	
C86			CK73GB1H471K	CHIP C	470PF	K	
C88			CK73GB1H102K	CHIP C	1000PF	K	
C91			CC73GCH1H060B	CHIP C	6.0PF	B	
C92			CC73GCH1H070B	CHIP C	7.0PF	B	
C94			CK73GB1H102K	CHIP C	1000PF	K	
C95			CC73GCH1H030B	CHIP C	3.0PF	B	
C96			CK73GB1H471K	CHIP C	470PF	K	
C97			CC73GCH1H0R5B	CHIP C	0.5PF	B	
C98			CC73GCH1H040B	CHIP C	4.0PF	B	
C99			CC73GCH1H0R5B	CHIP C	0.5PF	B	
C100			CC73GCH1H040B	CHIP C	4.0PF	B	

K : TS-2000 (K) **KX : TS-2000X (K)**
E : TS-2000 (E) **E2 : TS-2000 (E2)**

PARTS LIST

TX-RX 2 UNIT (X57-606X-XX)

Ref. No.	Address	New parts	Parts No.	Description	Destination
C101			CK73GB1H471K	CHIP C 470PF K	
C102			CC73GCH1H0R5B	CHIP C 0.5PF B	
C103			CC73GCH1H0R3B	CHIP C 0.3PF B	
C104			CC73GCH1H050B	CHIP C 5.0PF B	
C105,106			CK73GB1H102K	CHIP C 1000PF K	
C107			CC73GCH1H050B	CHIP C 5.0PF B	
C108			CC73GCH1H270J	CHIP C 27PF J	
C109			CC73GCH1H070B	CHIP C 7.0PF B	
C110			CK73GB1H103K	CHIP C 0.010UF K	
C111			CC73GCH1H050B	CHIP C 5.0PF B	
C112			CC73GCH1H100D	CHIP C 10PF D	
C113			CK73GB1H102K	CHIP C 1000PF K	
C114			CK73GB1H471K	CHIP C 470PF K	
C115			CC73GCH1H180J	CHIP C 18PF J	
C116			CC73GCH1H0R3B	CHIP C 0.3PF B	
C117,118			CK73GB1H102K	CHIP C 1000PF K	
C119			CC73GCH1H180J	CHIP C 18PF J	
C120			CK73GB1H102K	CHIP C 1000PF K	
C123			CK73GB1H102K	CHIP C 1000PF K	
C124			CC73GCH1H120J	CHIP C 12PF J	
C125			CC73GCH1H060B	CHIP C 6.0PF B	
C126			CK73GB1H102K	CHIP C 1000PF K	
C127			CK73GB1H471K	CHIP C 470PF K	
C128			CC73GCH1H020B	CHIP C 2.0PF B	
C129			CK73GB1H471K	CHIP C 470PF K	
C130			CK73GB1H102K	CHIP C 1000PF K	
C131-133			CK73GB1H471K	CHIP C 470PF K	
C134			CC73GCH1H050B	CHIP C 5.0PF B	
C135			CC73GCH1H060B	CHIP C 6.0PF B	
C136,137			CK73GB1H102K	CHIP C 1000PF K	
C138			CK73GB1H471K	CHIP C 470PF K	
C139,140			CK73GB1H102K	CHIP C 1000PF K	
C141			CK73GB1H471K	CHIP C 470PF K	
C142			CC73GCH1H040B	CHIP C 4.0PF B	
C143,144			CK73GB1H102K	CHIP C 1000PF K	
C145			CK73GB1H471K	CHIP C 470PF K	
C146			CC73GCH1H101J	CHIP C 100PF J	
C147			CC73GCH1H080B	CHIP C 8.0PF B	
C148			CC73GCH1H050B	CHIP C 5.0PF B	
C150			CC73GCH1H0R5B	CHIP C 0.5PF B	
C151			CC73GCH1H120J	CHIP C 12PF J	
C152			CK73GB1H471K	CHIP C 470PF K	
C153			CC73GCH1H101J	CHIP C 100PF J	
C154			CK73GB1H102K	CHIP C 1000PF K	
C155			CC73GCH1H040B	CHIP C 4.0PF B	
C156			CK73GB1H102K	CHIP C 1000PF K	
C157			CC73GCH1H040B	CHIP C 4.0PF B	
C158			CC73GCH1H060B	CHIP C 6.0PF B	
C159			CK73GB1H102K	CHIP C 1000PF K	
C160			CC73GCH1H040B	CHIP C 4.0PF B	
C161			CK73GB1H471K	CHIP C 470PF K	
C162,163			CC73GCH1H050B	CHIP C 5.0PF B	
C164			CC73GCH1H0R5B	CHIP C 0.5PF B	
C165			CC73GCH1H020B	CHIP C 2.0PF B	
C166			CC73GCH1H070B	CHIP C 7.0PF B	
C167			CK73GB1H471K	CHIP C 470PF K	
C168			CC73GCH1H040B	CHIP C 4.0PF B	
C169			CK73GB1H102K	CHIP C 1000PF K	
C170			CC73GCH1H060B	CHIP C 6.0PF B	
C171			CC73GCH1H120J	CHIP C 12PF J	

Ref. No.	Address	New parts	Parts No.	Description	Destination
C172			CC73GCH1H0R3B	CHIP C 0.3PF B	
C173			CC73GCH1H030B	CHIP C 3.0PF B	
C174,175			CK73GB1H102K	CHIP C 1000PF K	
C176			CK73GB1H471K	CHIP C 470PF K	
C177			CC73GCH1H470J	CHIP C 47PF J	
C178			CC73GCH1H0R3B	CHIP C 0.3PF B	
C179			CC73GCH1H150J	CHIP C 15PF J	
C180			CK73GB1H102K	CHIP C 1000PF K	
C181			CC73GCH1H050B	CHIP C 5.0PF B	
C182			CC73GCH1H090B	CHIP C 9.0PF B	
C183			CK73GB1H102K	CHIP C 1000PF K	
C184			CK73GB1H471K	CHIP C 470PF K	
C185			CC73GCH1H050B	CHIP C 5.0PF B	
C186			CC73GCH1H0R3B	CHIP C 0.3PF B	
C187			CK73GB1H103K	CHIP C 0.010UF K	
C188			CC73GCH1H100D	CHIP C 10PF D	
C189			CC73GCH1H0R3B	CHIP C 0.3PF B	
C190			CC73GCH1H100D	CHIP C 10PF D	
C191			CK73FB1C105K	CHIP C 1.0UF K	
C192			CC73GCH1H040B	CHIP C 4.0PF B	
C193,194			CK73GB1H102K	CHIP C 1000PF K	
C195			CK73GB1H103K	CHIP C 0.010UF K	
C196-199			CK73GB1H102K	CHIP C 1000PF K	
C200,201			CK73GB1H471K	CHIP C 470PF K	
C202,203			CC73GCH1H040B	CHIP C 4.0PF B	
C204			CC73GCH1H2R5B	CHIP C 2.5PF B	
C205			CK73GB1H471K	CHIP C 470PF K	
C206,207			CK73GB1H102K	CHIP C 1000PF K	
C208,209			CK73GB1H471K	CHIP C 470PF K	
C210			CK73FB1C105K	CHIP C 1.0UF K	
C211			CK73GB1H471K	CHIP C 470PF K	
C212			CK73GB1H102K	CHIP C 1000PF K	
C213			CK73GB1C104K	CHIP C 0.10UF K	
C214-219			CK73GB1H102K	CHIP C 1000PF K	
C220-222			CK73GB1C104K	CHIP C 0.10UF K	
C224			CC73GCH1H100D	CHIP C 10PF D	
C225			CK73GB1C104K	CHIP C 0.10UF K	
C227			CC73GCH1H020B	CHIP C 2.0PF B	
C232			CK73GB1H102K	CHIP C 1000PF K	
C233			CC73GCH1H220J	CHIP C 22PF J	
C234			CC73GCH1H270J	CHIP C 27PF J	
C235			CK73GB1H102K	CHIP C 1000PF K	
C238			CK73GB1H102K	CHIP C 1000PF K	
C239			CK73GB1H471K	CHIP C 470PF K	
C240			CC73GCH1H050B	CHIP C 5.0PF B	
C241			CC73GCH1H150J	CHIP C 15PF J	
C242,243			CK73GB1H102K	CHIP C 1000PF K	
C245			CK73GB1H102K	CHIP C 1000PF K	
C246			CC73GCH1H030B	CHIP C 3.0PF B	
C247			CK73GB1H471K	CHIP C 470PF K	
C248			CC73GCH1H150J	CHIP C 15PF J	
C249			CC73GCH1H050B	CHIP C 5.0PF B	E,E2
C249			CC73GCH1H100D	CHIP C 10PF D	K,KX
C250			CK73GB1H471K	CHIP C 470PF K	
C251			CK73GB1C104K	CHIP C 0.10UF K	
C252			CC73GCH1H070B	CHIP C 7.0PF B	
C253			CK73GB1H103K	CHIP C 0.010UF K	
C254			CC73GCH1H030B	CHIP C 3.0PF B	
C255			CK73GB1H103K	CHIP C 0.010UF K	
C256			CC73GCH1H120J	CHIP C 12PF J	

K : TS-2000 (K) **KX : TS-2000X (K)**
E : TS-2000 (E) **E2 : TS-2000 (E2)**

PARTS LIST

TX-RX 2 UNIT (X57-606X-XX)

Ref. No.	Address	New parts	Parts No.	Description			Destination
C257			CK73GB1H102K	CHIP C	1000PF	K	
C258			CK73GB1H103K	CHIP C	0.010UF	K	
C259			CK73GB1H102K	CHIP C	1000PF	K	
C260			CK73GB1H103K	CHIP C	0.010UF	K	
C261			CK73GB1H102K	CHIP C	1000PF	K	
C262,263			CK73GB1H103K	CHIP C	0.010UF	K	
C264,265			CK73GB1H102K	CHIP C	1000PF	K	
C266			CK73GB1H103K	CHIP C	0.010UF	K	
C267			CK73GB1C104K	CHIP C	0.10UF	K	
C268			CC73GCH1H390J	CHIP C	39PF	J	
C269			CK73GB1H103K	CHIP C	0.010UF	K	
C270			CK73GB1H102K	CHIP C	1000PF	K	
C271			CC73GCH1H150J	CHIP C	15PF	J	
C272			CK73GB1H102K	CHIP C	1000PF	K	
C274			CK73GB1H471K	CHIP C	470PF	K	
C276			CK73GB1H471K	CHIP C	470PF	K	
C277			CC73GCH1H150J	CHIP C	15PF	J	
C278			CK73GB1H103K	CHIP C	0.010UF	K	
C279			CC73GCH1H010B	CHIP C	1.0PF	B	
C280			CK73FB1C105K	CHIP C	1.0UF	K	
C281			CK73GB1C104K	CHIP C	0.10UF	K	
C282			CC73GCH1H200J	CHIP C	20PF	J	
C283			CC73GCH1H030B	CHIP C	3.0PF	B	
C284-287			CK73GB1H103K	CHIP C	0.010UF	K	
C288			CK73GB1H102K	CHIP C	1000PF	K	
C289			CK73GB1C104K	CHIP C	0.10UF	K	E,E2
C290-292			CK73GB1H103K	CHIP C	0.010UF	K	
C293,294			CK73FB1C105K	CHIP C	1.0UF	K	
C295			CK73GB1H103K	CHIP C	0.010UF	K	
C296			CC73GCH1H060B	CHIP C	6.0PF	B	
C297,298			CK73GB1H103K	CHIP C	0.010UF	K	
C299			CK73GB1H471K	CHIP C	470PF	K	
C300			CK73GB1H102K	CHIP C	1000PF	K	
C301			CK73GB1H103K	CHIP C	0.010UF	K	
C303			CK73GB1C104K	CHIP C	0.10UF	K	
C304-307			CK73GB1H103K	CHIP C	0.010UF	K	
C308,309			CK73GB1C104K	CHIP C	0.10UF	K	E,E2
C309			CK73GB1C104K	CHIP C	0.10UF	K	K,KX
C310			CK73GB1H103K	CHIP C	0.010UF	K	
C312			CK73GB1C104K	CHIP C	0.10UF	K	
C314,315			CK73GB1H103K	CHIP C	0.010UF	K	
C316			CC73GCH1H120J	CHIP C	12PF	J	
C317,318			CK73GB1H103K	CHIP C	0.010UF	K	
C319			CC73GCH1H200J	CHIP C	20PF	J	
C320			CK73GB1H103K	CHIP C	0.010UF	K	
C321			CC73GCH1H150J	CHIP C	15PF	J	
C322			CK73GB1H103K	CHIP C	0.010UF	K	
C323			C92-0610-05	ELECTRO	47UF	16WV	
C324			CK73GB1H103K	CHIP C	0.010UF	K	
C325			CK73GB1C104K	CHIP C	0.10UF	K	
C326,327			CC73GCH1H030B	CHIP C	3.0PF	B	
C328			CK73GB1C104K	CHIP C	0.10UF	K	
C329,330			CK73GB1H103K	CHIP C	0.010UF	K	
C331			CK73GB1C104K	CHIP C	0.10UF	K	
C332			CK73GB1H102K	CHIP C	1000PF	K	
C333			CK73GB1H103K	CHIP C	0.010UF	K	
C334			CK73GB1C104K	CHIP C	0.10UF	K	
C335			CC73GCH1H270J	CHIP C	27PF	J	
C336			CK73GB1C104K	CHIP C	0.10UF	K	
C338			CC73GCH1H221J	CHIP C	220PF	J	

Ref. No.	Address	New parts	Parts No.	Description			Destination
C339			CK73GB1H103K	CHIP C	0.010UF	K	
C340			CC73GCH1H221J	CHIP C	220PF	J	
C341			CK73GB1H471K	CHIP C	470PF	K	
C342,343			CK73GB1C104K	CHIP C	0.10UF	K	
C345			CK73GB1H103K	CHIP C	0.010UF	K	
C346			CK73GB1C473K	CHIP C	0.047UF	K	
C347			CK73GB1H472K	CHIP C	4700PF	K	
C348			CC73GCH1H271J	CHIP C	270PF	J	
C349			CK73GB1C104K	CHIP C	0.10UF	K	
C350			CK73GB1H103K	CHIP C	0.010UF	K	
C352			CK73GB1C473K	CHIP C	0.047UF	K	
C353			CK73GB1H103K	CHIP C	0.010UF	K	
C357			CK73GB1E223K	CHIP C	0.022UF	K	
C358			CK73GB1C473K	CHIP C	0.047UF	K	
C359			CK73GB1H103K	CHIP C	0.010UF	K	
C360			CK73GB1C104K	CHIP C	0.10UF	K	
C361			CC73GCH1H330J	CHIP C	33PF	J	
C362			CK73FB1C105K	CHIP C	1.0UF	K	
C363			C92-0610-05	ELECTRO	47UF	16WV	
C364,365			CK73FB1C105K	CHIP C	1.0UF	K	
C366			CK73GB1H103K	CHIP C	0.010UF	K	
C368			C92-0628-05	CHIP-TAN	10UF	10WV	
C372-375			CK73GB1H102K	CHIP C	1000PF	K	
C376			CC73GCH1H060B	CHIP C	6.0PF	B	
C377			CC73GCH1H330J	CHIP C	33PF	J	
C378			CC73GCH1H060B	CHIP C	6.0PF	B	
C379			CC73GCH1H050B	CHIP C	5.0PF	B	
C382			CC73GCH1H050B	CHIP C	5.0PF	B	
C383			CK73GB1H102K	CHIP C	1000PF	K	
C384			CC73GCH1H0R5B	CHIP C	0.5PF	B	
C385			CC73GCH1H010B	CHIP C	1.0PF	B	
C386			CC73GCH1H050B	CHIP C	5.0PF	B	
C387			CC73GCH1H180J	CHIP C	18PF	J	K,KX
C387			CC73GCH1H470J	CHIP C	47PF	J	E,E2
C389,390			CK73GB1C104K	CHIP C	0.10UF	K	
C391			C92-0628-05	CHIP-TAN	10UF	10WV	
C393-399			CK73GB1H102K	CHIP C	1000PF	K	
C420			CK73GB1H472K	CHIP C	4700PF	K	
C421			C92-0628-05	CHIP-TAN	10UF	10WV	
C422			C92-0543-05	CHIP-TAN	3.3UF	10WV	
C423,424			CK73GB1H102K	CHIP C	1000PF	K	
C425			C92-0628-05	CHIP-TAN	10UF	10WV	
C427			CC73GCH1H180J	CHIP C	18PF	J	
C428			CC73GCH1H100D	CHIP C	10PF	D	
C429			CK73GB1H102K	CHIP C	1000PF	K	
C431			CK73GB1H102K	CHIP C	1000PF	K	
C432			C92-0543-05	CHIP-TAN	3.3UF	10WV	
C433			CK73GB1H471K	CHIP C	470PF	K	
C434			CC73GCH1H080B	CHIP C	8.0PF	B	
C435			CK73GB1H102K	CHIP C	1000PF	K	
C436			CK73GB1H471K	CHIP C	470PF	K	
C437			CC73GCH1H060B	CHIP C	6.0PF	B	
C438			CK73GB1H102K	CHIP C	1000PF	K	
C439			CK73GB1C473K	CHIP C	0.047UF	K	
C440			CK73GB1H102K	CHIP C	1000PF	K	
C441			CK73GB1C473K	CHIP C	0.047UF	K	
C442			C92-0628-05	CHIP-TAN	10UF	10WV	
C443			CC73GCH1H050B	CHIP C	5.0PF	B	
C444			CK73GB1C473K	CHIP C	0.047UF	K	
C445			CC73GCH1H030B	CHIP C	3.0PF	B	

K : TS-2000 (K) **KX : TS-2000X (K)**
E : TS-2000 (E) **E2 : TS-2000 (E2)**

PARTS LIST

TX-RX 2 UNIT (X57-606X-XX)

Ref. No.	Address	New parts	Parts No.	Description			Destination
C446			CC73GCH1H020B	CHIP C	2.0PF	B	
C447			CK73GB1H103K	CHIP C	0.010UF	K	
C448,449			CK73GB1H102K	CHIP C	1000PF	K	
C453			CC73GCH1H070B	CHIP C	7.0PF	B	
C454			CC73GCH1H150J	CHIP C	15PF	J	
C455			CK73GB1H103K	CHIP C	0.010UF	K	
C456			CC73GCH1H180J	CHIP C	18PF	J	
C457			CC73GCH1H080B	CHIP C	8.0PF	B	
C458			CC73GCH1H070B	CHIP C	7.0PF	B	
C459,460			CK73GB1H102K	CHIP C	1000PF	K	
C461			CK73GB1H472K	CHIP C	4700PF	K	
C462,463			CC73GCH1H180J	CHIP C	18PF	J	
C464			CK73GB1C473K	CHIP C	0.047UF	K	
C465,466			CK73GB1H102K	CHIP C	1000PF	K	
C467,468			CK73GB1H103K	CHIP C	0.010UF	K	
C469,470			CC73GCH1H0R5B	CHIP C	0.5PF	B	
C471			C92-0628-05	CHIP-TAN	10UF	10WV	
C472			CC73GCH1H220J	CHIP C	22PF	J	
C473			C92-0628-05	CHIP-TAN	10UF	10WV	
C474			CK73GB1H471K	CHIP C	470PF	K	
C475,476			CK73GB1H102K	CHIP C	1000PF	K	
C477			CK73GB1H103K	CHIP C	0.010UF	K	
C478,479			CK73GB1H471K	CHIP C	470PF	K	
C481,482			CC73GCH1H040B	CHIP C	4.0PF	B	
C483			CK73GB1H103K	CHIP C	0.010UF	K	
C484			CK73GB1H102K	CHIP C	1000PF	K	
C485			C92-0628-05	CHIP-TAN	10UF	10WV	
C486,487			CC73GCH1H060B	CHIP C	6.0PF	B	
C488			CC73GCH1H390J	CHIP C	39PF	J	
C489			CK73GB1H103K	CHIP C	0.010UF	K	
C490			CK73GB1H472K	CHIP C	4700PF	K	
C491,492			CC73GCH1H050B	CHIP C	5.0PF	B	
C494			CK73GB1H103K	CHIP C	0.010UF	K	
C495			CC73GCH1H470J	CHIP C	47PF	J	
C496			CK73GB1H102K	CHIP C	1000PF	K	
C497			CC73GCH1H060B	CHIP C	6.0PF	B	
C498			CK73GB1H102K	CHIP C	1000PF	K	
C499			CC73GCH1H060B	CHIP C	6.0PF	B	
C501			CK73GB1H471K	CHIP C	470PF	K	
C502			C92-0628-05	CHIP-TAN	10UF	10WV	
C503			CK73GB1H472K	CHIP C	4700PF	K	
C504			CK73GB1C473K	CHIP C	0.047UF	K	
C505			CC73GCH1H270J	CHIP C	27PF	J	
C506			CC73GCH1H040B	CHIP C	4.0PF	B	
C507			CK73GB1H103K	CHIP C	0.010UF	K	
C508			CC73GCH1H470J	CHIP C	47PF	J	
C509			CK73GB1H471K	CHIP C	470PF	K	
C510			CC73GCH1H101J	CHIP C	100PF	J	
C511			CK73GB1H471K	CHIP C	470PF	K	
C512			CC73GCH1H390J	CHIP C	39PF	J	
C513			C92-0001-05	CHIP C	0.1UF	35WV	
C514			C92-0004-05	CHIP-TAN	1.0UF	16WV	
C515			CC73GCH1H101J	CHIP C	100PF	J	
C516			C92-0003-05	CHIP-TAN	0.47UF	25WV	
C517			CC73GCH1H151J	CHIP C	150PF	J	
C518			C92-0555-05	CHIP-TAN	0.047UF	35WV	
C519			CK73GB1C473K	CHIP C	0.047UF	K	
C520			CC73GCH1H151J	CHIP C	150PF	J	
C521			CK73GB1C473K	CHIP C	0.047UF	K	
C522			CC73GCH1H151J	CHIP C	150PF	J	

Ref. No.	Address	New parts	Parts No.	Description			Destination
C523			CK73GB1H472K	CHIP C	4700PF	K	
C524			CC73GCH1H470J	CHIP C	47PF	J	
C525			CC73GCH1H100D	CHIP C	10PF	D	
C526			CK73GB1H102K	CHIP C	1000PF	K	
C527			CK73GB1C473K	CHIP C	0.047UF	K	
C528			C92-0628-05	CHIP-TAN	10UF	10WV	
C529			CK73GB1H472K	CHIP C	4700PF	K	
C530			CC73GCH1H070B	CHIP C	7.0PF	B	
C531			CK73GB1C473K	CHIP C	0.047UF	K	
C532			CC73GCH1H270J	CHIP C	27PF	J	
C533			CC73GCH1H101J	CHIP C	100PF	J	
C534			C92-1327-05	CHIP-TAN	100UF	10WV	
C535			CC73GCH1H820J	CHIP C	82PF	J	
C536			CK73GB1C473K	CHIP C	0.047UF	K	
C537			CC73GCH1H020B	CHIP C	2.0PF	B	
C538			CK73GB1C473K	CHIP C	0.047UF	K	
C539			C92-0628-05	CHIP-TAN	10UF	10WV	
C540			CC73GCH1H150J	CHIP C	15PF	J	
C541			CK73GB1C473K	CHIP C	0.047UF	K	
C542			CC73GCH1H101J	CHIP C	100PF	J	
C543			CC73GCH1H080B	CHIP C	8.0PF	B	
C544			CK73GB1H472K	CHIP C	4700PF	K	
C545			CK73GB1H102K	CHIP C	1000PF	K	
C546			C92-1327-05	CHIP-TAN	100UF	10WV	
C547			CC73GCH1H470J	CHIP C	47PF	J	
C548			CC73GCH1H010B	CHIP C	1.0PF	B	
C549			CC73GCH1H390J	CHIP C	39PF	J	
C550			CK73GB1H102K	CHIP C	1000PF	K	
C551			CC73GCH1H121J	CHIP C	120PF	J	
C552			CK73GB1H102K	CHIP C	1000PF	K	
C554			CK73GB1H103K	CHIP C	0.010UF	K	
C555			CC73GCH1H070B	CHIP C	7.0PF	B	
C556			CC73GCH1H181J	CHIP C	180PF	J	
C558			CK73GB1H103K	CHIP C	0.010UF	K	
C559,560			CK73GB1C473K	CHIP C	0.047UF	K	
C561			CC73GCH1H150J	CHIP C	15PF	J	
C562			CC73GCH1H470J	CHIP C	47PF	J	
C563			CC73GCH1H151J	CHIP C	150PF	J	
C564			CC73GCH1H101J	CHIP C	100PF	J	
C565			CK73GB1H103K	CHIP C	0.010UF	K	
C566			CC73GCH1H101J	CHIP C	100PF	J	
C567			CK73GB1H103K	CHIP C	0.010UF	K	
C568			CK73GB1H472K	CHIP C	4700PF	K	
C569			CC73GCH1H470J	CHIP C	47PF	J	
C570			CC73GCH1H151J	CHIP C	150PF	J	
C571			CK73GB1H332K	CHIP C	3300PF	K	
C572,573			CK73GB1C473K	CHIP C	0.047UF	K	
C574			C92-0628-05	CHIP-TAN	10UF	10WV	
C576			CK73GB1H472K	CHIP C	4700PF	K	
C577			C92-0628-05	CHIP-TAN	10UF	10WV	
C579			CK73GB1H472K	CHIP C	4700PF	K	
C580			CK73GB1C473K	CHIP C	0.047UF	K	
C581			CC73GCH1H220J	CHIP C	22PF	J	
C582			CC73GCH1H181J	CHIP C	180PF	J	
C583			C92-0628-05	CHIP-TAN	10UF	10WV	
C585			CK73GB1H472K	CHIP C	4700PF	K	
C586-588			CK73GB1H103K	CHIP C	0.010UF	K	
C589,590			CK73GB1H102K	CHIP C	1000PF	K	
C591			CC73GCH1H390J	CHIP C	39PF	J	
C592			CC73GCH1H270J	CHIP C	27PF	J	

K : TS-2000 (K) **KX : TS-2000X (K)**
E : TS-2000 (E) **E2 : TS-2000 (E2)**

PARTS LIST

TX-RX 2 UNIT (X57-606X-XX)

Ref. No.	Address	New parts	Parts No.	Description			Destination
C593-595			CK73GB1H103K	CHIP C	0.010UF	K	
C596,597			C92-0628-05	CHIP-TAN	10UF	10WV	
C598,599			CK73GB1C473K	CHIP C	0.047UF	K	
C600			CK73GB1H102K	CHIP C	1000PF	K	
C601			CC73GCH1H020B	CHIP C	2.0PF	B	
C602			C92-1327-05	CHIP-TAN	100UF	10WV	
C603			CK73GB1C473K	CHIP C	0.047UF	K	
C605,606			CK73GB1C473K	CHIP C	0.047UF	K	
C607,608			CC73GCH1H560J	CHIP C	56PF	J	
C609			CC73GCH1H150J	CHIP C	15PF	J	
C610,611			CC73GCH1H240J	CHIP C	24PF	J	
C612			CK73GB1H103K	CHIP C	0.010UF	K	
C613			CC73GCH1H101J	CHIP C	100PF	J	
C614			CC73GCH1H100D	CHIP C	10PF	D	
C615			CC73GCH1H101J	CHIP C	100PF	J	
C616,617			CK73GB1C473K	CHIP C	0.047UF	K	
C618,619			CC73GCH1H100D	CHIP C	10PF	D	
C620			C92-0628-05	CHIP-TAN	10UF	10WV	
C621-623			CK73GB1C473K	CHIP C	0.047UF	K	
C625			CK73GB1C473K	CHIP C	0.047UF	K	
C626			CC73GCH1H560J	CHIP C	56PF	J	
C627			CC73GCH1H101J	CHIP C	100PF	J	
C628			CC73GCH1H040B	CHIP C	4.0PF	B	
C629			CC73GCH1H101J	CHIP C	100PF	J	
C630			CC73GCH1H820J	CHIP C	82PF	J	
C631			CC73GCH1H240J	CHIP C	24PF	J	
C632,633			CC73GCH1H030B	CHIP C	3.0PF	B	
C634			CC73GCH1H470J	CHIP C	47PF	J	
C636			CC73GCH1H390J	CHIP C	39PF	J	
C637			CK73GB1C473K	CHIP C	0.047UF	K	
C638			CC73GCH1H070B	CHIP C	7.0PF	B	
C639			CK73GB1C473K	CHIP C	0.047UF	K	
C640			CC73GCH1H101J	CHIP C	100PF	J	
C641			CC73GCH1H560J	CHIP C	56PF	J	
C642			CK73GB1C473K	CHIP C	0.047UF	K	
C643			CC73GCH1H560J	CHIP C	56PF	J	
C644			CC73GCH1H820J	CHIP C	82PF	J	
C645			CK73GB1C473K	CHIP C	0.047UF	K	
C646			CK73GB1H102K	CHIP C	1000PF	K	
C647			CC73GCH1H120J	CHIP C	12PF	J	
C648			CK73GB1H102K	CHIP C	1000PF	K	
C649			CK73GB1C473K	CHIP C	0.047UF	K	
C650			CC73GCH1H100D	CHIP C	10PF	D	
C651			CC73GCH1H101J	CHIP C	100PF	J	
C652			CC73GCH1H060B	CHIP C	6.0PF	B	
C654			CC73GCH1H030B	CHIP C	3.0PF	B	
C656			CK73GB1H471K	CHIP C	470PF	K	
C657			CC73GCH1H080B	CHIP C	8.0PF	B	
C658			CC73GCH1H0R5B	CHIP C	0.5PF	B	
C659			CC73GCH1H560J	CHIP C	56PF	J	
C660			CK73GB1H332K	CHIP C	3300PF	K	
C662			CK73GB1H472K	CHIP C	4700PF	K	
C663			CC73GCH1H120J	CHIP C	12PF	J	
C665			CK73GB1C473K	CHIP C	0.047UF	K	
C666			CK73GB1H472K	CHIP C	4700PF	K	
C667,668			CK73GB1C473K	CHIP C	0.047UF	K	
C669			CK73GB1H102K	CHIP C	1000PF	K	
C670			CC73GCH1H0R5B	CHIP C	0.5PF	B	
C671			CC73GCH1H390J	CHIP C	39PF	J	
C672			CK73GB1H102K	CHIP C	1000PF	K	

Ref. No.	Address	New parts	Parts No.	Description			Destination
C674			CC73GCH1H101J	CHIP C	100PF	J	
C675			CK73GB1H471K	CHIP C	470PF	K	
C676			CK73GB1C473K	CHIP C	0.047UF	K	
C677			CC73GCH1H151J	CHIP C	150PF	J	
C679			CK73GB1C473K	CHIP C	0.047UF	K	
C680			CK73GB1H102K	CHIP C	1000PF	K	
C681			CC73GCH1H070B	CHIP C	7.0PF	B	
C682			CK73GB1H471K	CHIP C	470PF	K	
C683			CK73GB1H102K	CHIP C	1000PF	K	
C684			CK73GB1H471K	CHIP C	470PF	K	
C685			CC73GCH1H020B	CHIP C	2.0PF	B	
C686			C92-0511-05	CHIP-TAN	0.15UF	35WV	
C687			CK73GB1H102K	CHIP C	1000PF	K	
C688			CC73GCH1H150J	CHIP C	15PF	J	
C689			CK73GB1H102K	CHIP C	1000PF	K	
C690			CC73GCH1H070B	CHIP C	7.0PF	B	
C691			CK73GB1H103K	CHIP C	0.010UF	K	
C693,694			CK73GB1H472K	CHIP C	4700PF	K	
C695			CC73GCH1H060B	CHIP C	6.0PF	B	
C696			CK73GB1H102K	CHIP C	1000PF	K	
C698,699			C92-0628-05	CHIP-TAN	10UF	10WV	
C700			CC73GCH1H150J	CHIP C	15PF	J	
C701			CC73GCH1H270J	CHIP C	27PF	J	
C702			CC73GCH1H180J	CHIP C	18PF	J	
C705			CK73GB1H102K	CHIP C	1000PF	K	
C706			CK73GB1H103K	CHIP C	0.010UF	K	
C707			CK73GB1H102K	CHIP C	1000PF	K	
C708,709			CK73GB1C473K	CHIP C	0.047UF	K	
C712			CC73GCH1H020B	CHIP C	2.0PF	B	
C714			CK73GB1H103K	CHIP C	0.010UF	K	
C715			CK73GB1C473K	CHIP C	0.047UF	K	
C716			CK73GB1H103K	CHIP C	0.010UF	K	
C717			C92-0628-05	CHIP-TAN	10UF	10WV	
C718			CK73GB1C473K	CHIP C	0.047UF	K	
C720,721			C92-0628-05	CHIP-TAN	10UF	10WV	
C722,723			CC73GCH1H151J	CHIP C	150PF	J	
C724,725			CK73GB1C473K	CHIP C	0.047UF	K	
C726			C92-1327-05	CHIP-TAN	100UF	10WV	
C728			C92-0555-05	CHIP-TAN	0.047UF	35WV	
C729			CK73GB1C473K	CHIP C	0.047UF	K	
C731			CC73GCH1H820J	CHIP C	82PF	J	
C733			CK73GB1H102K	CHIP C	1000PF	K	
C734			CC73GCH1H390J	CHIP C	39PF	J	
C736			C92-0628-05	CHIP-TAN	10UF	10WV	
C737			CC73GCH1H820J	CHIP C	82PF	J	
C739			C92-0543-05	CHIP-TAN	3.3UF	10WV	
C740			CK73GB1H102K	CHIP C	1000PF	K	
C741			CC73GCH1H220J	CHIP C	22PF	J	
C742			CC73GCH1H240J	CHIP C	24PF	J	
C743			C92-0543-05	CHIP-TAN	3.3UF	10WV	
C744			CK73GB1H103K	CHIP C	0.010UF	K	
C745			CC73GCH1H270J	CHIP C	27PF	J	
C746			CK73GB1H102K	CHIP C	1000PF	K	
C747			C92-0628-05	CHIP-TAN	10UF	10WV	
C748			CK73GB1H102K	CHIP C	1000PF	K	
C749			CK73GB1H471K	CHIP C	470PF	K	
C750			CK73GB1C473K	CHIP C	0.047UF	K	
C751,752			C92-0543-05	CHIP-TAN	3.3UF	10WV	
C753,754			CK73GB1H182K	CHIP C	1800PF	K	
C755			CC73GCH1H180J	CHIP C	18PF	J	

K : TS-2000 (K) **KX : TS-2000X (K)**
E : TS-2000 (E) **E2 : TS-2000 (E2)**

PARTS LIST

TX-RX 2 UNIT (X57-606X-XX)

Ref. No.	Address	New parts	Parts No.	Description			Destination
C756			CC73GCH1H100D	CHIP C	10PF	D	
C757			CK73GB1C473K	CHIP C	0.047UF	K	
C758			CK73GB1H471K	CHIP C	470PF	K	
C759			CK73GB1H472K	CHIP C	4700PF	K	
C761			CC73GCH1H101J	CHIP C	100PF	J	
C762			CK73GB1H102K	CHIP C	1000PF	K	
C763,764			CC73GCH1H180J	CHIP C	18PF	J	
C765,766			CC73GCH1H100D	CHIP C	10PF	D	
C767			C92-0628-05	CHIP-TAN	10UF	10WV	
C770			CK73GB1H103K	CHIP C	0.010UF	K	
C771			C92-0628-05	CHIP-TAN	10UF	10WV	
C772			CC73GCH1H101J	CHIP C	100PF	J	
C773,774			CK73GB1H103K	CHIP C	0.010UF	K	
C775			CK73GB1H102K	CHIP C	1000PF	K	
C776			CK73GB1H471K	CHIP C	470PF	K	
C777			C92-0555-05	CHIP-TAN	0.047UF	35WV	
C778			CK73GB1H102K	CHIP C	1000PF	K	
C780			CK73GB1H471K	CHIP C	470PF	K	
C781			CC73GCH1H100D	CHIP C	10PF	D	
C782			CC73GCH1H050B	CHIP C	5.0PF	B	
C783			CK73GB1H103K	CHIP C	0.010UF	K	
C784			CK73GB1H102K	CHIP C	1000PF	K	
C786			CK73GB1H103K	CHIP C	0.010UF	K	
C788			CK73GB1H103K	CHIP C	0.010UF	K	
C789,790			CC73GCH1H101J	CHIP C	100PF	J	
C791			CK73GB1H103K	CHIP C	0.010UF	K	
C792			CK73GB1H471K	CHIP C	470PF	K	
C793			C92-0606-05	CHIP-TAN	4.7UF	10WV	
C794			CK73GB1H472K	CHIP C	4700PF	K	
C795			C92-0628-05	CHIP-TAN	10UF	10WV	
C796			CK73GB1C473K	CHIP C	0.047UF	K	
C798			CK73GB1H471K	CHIP C	470PF	K	
C799			C92-0502-05	CHIP-TAN	0.33UF	35WV	
C800			C92-0511-05	CHIP-TAN	0.15UF	35WV	
C802,803			CK73GB1C473K	CHIP C	0.047UF	K	
C804			CC73GCH1H101J	CHIP C	100PF	J	
C806			CK73GB1C473K	CHIP C	0.047UF	K	
C807			CC73GCH1H220J	CHIP C	22PF	J	
C808			CK73GB1H102K	CHIP C	1000PF	K	
C809			CK73GB1C473K	CHIP C	0.047UF	K	
C810			CK73GB1H471K	CHIP C	470PF	K	
C811			CC73GCH1H101J	CHIP C	100PF	J	
C813			CC73GCH1H220J	CHIP C	22PF	J	
C814			CK73GB1H102K	CHIP C	1000PF	K	
C815			CK73GB1C473K	CHIP C	0.047UF	K	
C817			CK73GB1H102K	CHIP C	1000PF	K	
C818			CC73GCH1H120J	CHIP C	12PF	J	
C819			CK73GB1H472K	CHIP C	4700PF	K	
C820			CK73GB1H102K	CHIP C	1000PF	K	
C821,822			CC73GCH1H120J	CHIP C	12PF	J	
C823			CC73GCH1H240J	CHIP C	24PF	J	
C824			CC73GCH1H180J	CHIP C	18PF	J	
C825			CK73GB1H103K	CHIP C	0.010UF	K	
C826			CC73GCH1H240J	CHIP C	24PF	J	
C827,828			CK73GB1H102K	CHIP C	1000PF	K	
C830			CK73GB1H102K	CHIP C	1000PF	K	
C831			CK73GB1H471K	CHIP C	470PF	K	
C832			CK73GB1H102K	CHIP C	1000PF	K	
C835			CC73GCH1H100D	CHIP C	10PF	D	
C836			CK73GB1H103K	CHIP C	0.010UF	K	

Ref. No.	Address	New parts	Parts No.	Description			Destination
C839			CK73GB1C473K	CHIP C	0.047UF	K	
C840-842			CK73GB1H103K	CHIP C	0.010UF	K	
C844			C92-1327-05	CHIP-TAN	100UF	10WV	
C849-854			C92-0628-05	CHIP-TAN	10UF	10WV	
C857-859			CK73GB1H102K	CHIP C	1000PF	K	
C860			C92-0628-05	CHIP-TAN	10UF	10WV	
C861,862			CK73GB1H102K	CHIP C	1000PF	K	
C863,864			CK73GB1H471K	CHIP C	470PF	K	
C865			CK73GB1H102K	CHIP C	1000PF	K	
C866,867			CK73GB1H103K	CHIP C	0.010UF	K	
C868			C92-0628-05	CHIP-TAN	10UF	10WV	
C869,870			CK73GB1H102K	CHIP C	1000PF	K	
C871			CK73GB1H472K	CHIP C	4700PF	K	
C872,873			CK73GB1H102K	CHIP C	1000PF	K	
C874			CK73GB1C473K	CHIP C	0.047UF	K	
C875			CK73GB1H103K	CHIP C	0.010UF	K	
C876			CC73GCH1H151J	CHIP C	150PF	J	
C877,878			CC73GCH1H070B	CHIP C	7.0PF	B	
C879			CK73GB1H471K	CHIP C	470PF	K	
C880			CC73GCH1H020B	CHIP C	2.0PF	B	
C881			CK73GB1H471K	CHIP C	470PF	K	
C882			CC73GCH1H020B	CHIP C	2.0PF	B	
C883,884			CC73GCH1H150J	CHIP C	15PF	J	
C885			CK73GB1H102K	CHIP C	1000PF	K	
C886,887			CC73GCH1H150J	CHIP C	15PF	J	
C888,889			CC73GCH1H010B	CHIP C	1.0PF	B	
C890			CC73GCH1H270J	CHIP C	27PF	J	
C892,893			CC73GCH1H070B	CHIP C	7.0PF	B	
C894,895			CC73GCH1H060B	CHIP C	6.0PF	B	
C896			CK73GB1H103K	CHIP C	0.010UF	K	
C897			CC73GCH1H120J	CHIP C	12PF	J	
C898			CK73GB1H471K	CHIP C	470PF	K	
C899,900			CC73GCH1H330J	CHIP C	33PF	J	
C901			CK73GB1H471K	CHIP C	470PF	K	
C902			CC73GCH1H050B	CHIP C	5.0PF	B	
C903			CK73GB1H471K	CHIP C	470PF	K	
C904			CC73GCH1H050B	CHIP C	5.0PF	B	
C905			CC73GCH1H070B	CHIP C	7.0PF	B	
C906			C92-0628-05	CHIP-TAN	10UF	10WV	
C907,908			CC73GCH1H020B	CHIP C	2.0PF	B	
C909,910			CK73GB1H102K	CHIP C	1000PF	K	
C911			CC73GCH1H150J	CHIP C	15PF	J	
C912			CK73GB1H471K	CHIP C	470PF	K	
C913			CK73GB1H102K	CHIP C	1000PF	K	
C914			CC73GCH1H150J	CHIP C	15PF	J	
C915			CK73GB1H471K	CHIP C	470PF	K	
C916,917			CC73GCH1H040B	CHIP C	4.0PF	B	
C918			CC73GCH1H560J	CHIP C	56PF	J	
C919,920			CK73GB1H102K	CHIP C	1000PF	K	
C923			CK73GB1H471K	CHIP C	470PF	K	
C924			CK73GB1H472K	CHIP C	4700PF	K	
C925,926			CC73GCH1H050B	CHIP C	5.0PF	B	
C927			CC73GCH1H020B	CHIP C	2.0PF	B	
C928			CK73GB1H472K	CHIP C	4700PF	K	
C929			CK73GB1H102K	CHIP C	1000PF	K	
C930			CC73GCH1H050B	CHIP C	5.0PF	B	
C931			CK73GB1H472K	CHIP C	4700PF	K	
C932			CC73GCH1H270J	CHIP C	27PF	J	
C933			CK73GB1H102K	CHIP C	1000PF	K	
C934,935			CK73GB1H471K	CHIP C	470PF	K	

K : TS-2000 (K) **KX : TS-2000X (K)**
E : TS-2000 (E) **E2 : TS-2000 (E2)**

PARTS LIST

TX-RX 2 UNIT (X57-606X-XX)

Ref. No.	Address	New parts	Parts No.	Description	Destination
C936			CC73GCH1H330J	CHIP C 33PF J	
TC1-6			C05-0369-05	CERAMIC TRIMMER CAP	
TC8-10			C05-0369-05	CERAMIC TRIMMER CAP	
TC12			C05-0370-05	CERAMIC TRIMMER CAP	
TC13			C05-0369-05	CERAMIC TRIMMER CAP	
TC14			C05-0370-05	CERAMIC TRIMMER CAP	
TC400,401			C05-0346-05	CERAMIC TRIMMER CAP (6P)	
TC402			C05-0384-05	CERAMIC TRIMMER CAP (10P)	
TC403			C05-0356-05	CERAMIC TRIMMER CAP (20P)	
TC404,405			C05-0384-05	CERAMIC TRIMMER CAP (10P)	
TC406			C05-0356-05	CERAMIC TRIMMER CAP (20P)	
TC408-410			C05-0384-05	CERAMIC TRIMMER CAP (10P)	
CN1-4			E04-0191-05	PIN SOCKET	
CN6			E04-0191-05	PIN SOCKET	
CN7			E40-3247-05	PIN ASSY	
CN8			E04-0191-05	PIN SOCKET	
CN9			E40-3246-05	PIN ASSY	
CN10			E40-3237-05	PIN ASSY	
CN11			E04-0191-05	PIN SOCKET	
CN12			E40-5741-05	FLAT CABLE CONNECTOR	
CN13			E04-0191-05	PIN SOCKET	
CN14			E40-5978-05	FLAT CABLE CONNECTOR	
CN15			E04-0154-05	PIN SOCKET	
CN17			E40-5978-05	FLAT CABLE CONNECTOR	
CN18			E04-0191-05	PIN SOCKET	
CN19			E04-0154-05	PIN SOCKET	
CN501			E40-5740-05	FLAT CABLE CONNECTOR	
CN502-506			E04-0191-05	PIN SOCKET	
CN510			E40-5699-05	PIN ASSY	
CN511,512			E40-6019-05	PIN ASSY	
CN513			E40-5699-05	PIN ASSY	
CN514			E40-6019-05	PIN ASSY	
CN530			E40-3246-05	PIN ASSY	
CN532			E40-5699-05	PIN ASSY	
CN533,534			E40-5758-05	FLAT CABLE CONNECTOR	
CN535			E40-5699-05	PIN ASSY	
J1			E11-0438-05	PHONE JACK (9P)	
J2			E11-0455-05	3.5D PHONE JACK (3P)	
W1		*	E37-0885-15	LEAD WIRE WITH CONNECTOR	
W501		*	E37-0956-05	LEAD WIRE WITH CONNECTOR	
W503		*	E37-0955-05	LEAD WIRE WITH CONNECTOR	
-		*	F10-2345-04	SHIELDING CASE	
-		*	F10-2346-04	SHIELDING CASE	
-		*	F10-2347-04	SHIELDING CASE	
-		*	F10-2348-04	SHIELDING CASE	
-		*	F10-2349-14	SHIELDING CASE	
401	1B	*	F10-2351-04	SHIELDING COVER	
-		*	F10-2388-14	SHIELDING CASE	
402	1B	*	F10-2389-04	SHIELDING COVER	
-		*	F10-2390-04	SHIELDING CASE	
-		*	F10-2391-04	SHIELDING CASE	
-			G02-0794-04	FLAT SPRING	
-		*	G13-1789-04	CUSHION	
-		*	G13-1790-04	CUSHION	
CF1		*	L72-0984-05	CERAMIC FILTER	
CF2		*	L72-0986-05	CERAMIC FILTER	E,E2
CF400			L72-0343-05	CERAMIC FILTER	
L1			L40-1095-34	SMALL FIXED INDUCTOR (1UH)	
L4,5		*	L92-0180-05	FERRITE CHIP	

Ref. No.	Address	New parts	Parts No.	Description	Destination
L6			L40-8275-92	SMALL FIXED INDUCTOR (82NH)	
L7			L40-2785-92	SMALL FIXED INDUCTOR (270NH)	
L8,9			L39-1421-05	TOROIDAL COIL	
L10			L40-1575-92	SMALL FIXED INDUCTOR (15NH)	
L11			L40-1085-92	SMALL FIXED INDUCTOR (100NH)	
L12,13			L40-1875-92	SMALL FIXED INDUCTOR (18NH)	
L14,15			L40-4775-92	SMALL FIXED INDUCTOR (47NH)	
L22			L40-1095-34	SMALL FIXED INDUCTOR (1UH)	
L23			L34-4472-05	COIL	
L27			L40-4775-34	SMALL FIXED INDUCTOR (47NH)	
L28			L34-4472-05	COIL	
L29			L79-1574-05	FILTER MODULE	E,E2
L29			L79-1575-05	FILTER MODULE	K,KX
L31			L40-1575-92	SMALL FIXED INDUCTOR (15NH)	
L32			L40-6875-34	SMALL FIXED INDUCTOR (68NH)	
L34			L34-4472-05	COIL	
L35			L40-6875-34	SMALL FIXED INDUCTOR (68NH)	
L39			L40-2275-92	SMALL FIXED INDUCTOR (22NH)	
L43			L40-8275-92	SMALL FIXED INDUCTOR (82NH)	
L44			L34-4472-05	COIL	
L45			L40-1875-92	SMALL FIXED INDUCTOR (18NH)	
L46			L40-1075-92	SMALL FIXED INDUCTOR (10NH)	
L47			L34-4472-05	COIL	
L48			L40-3375-34	SMALL FIXED INDUCTOR (33NH)	
L50			L79-1574-05	FILTER MODULE	E,E2
L50			L79-1575-05	FILTER MODULE	K,KX
L52			L34-4472-05	COIL	
L55			L34-4472-05	COIL	
L59			L39-1421-05	TOROIDAL COIL	
L61-63			L39-1421-05	TOROIDAL COIL	
L64,65			L92-0138-05	FERRITE CHIP	
L66-68			L39-1421-05	TOROIDAL COIL	
L69			L40-3381-37	SMALL FIXED INDUCTOR (0.330UH)	
L72			L40-3381-37	SMALL FIXED INDUCTOR (0.330UH)	
L73			L40-5675-92	SMALL FIXED INDUCTOR (56NH)	
L74			L40-3381-37	SMALL FIXED INDUCTOR (0.330UH)	
L75			L39-1421-05	TOROIDAL COIL	
L79			L40-5681-37	SMALL FIXED INDUCTOR (0.560UH)	
L80			L34-4205-05	COIL	
L82			L34-4206-05	COIL	
L83		*	L40-4705-85	SMALL FIXED INDUCTOR (47U)	
L85		*	L40-4705-85	SMALL FIXED INDUCTOR (47U)	
L86		*	L34-4649-05	COIL	
L89			L40-6885-34	SMALL FIXED INDUCTOR (680NH)	
L90			L34-4026-15	COIL	
L91			L34-4025-05	COIL	
L93			L34-4459-05	COIL	
L95-97			L40-1085-92	SMALL FIXED INDUCTOR (100NH)	
L100		*	L41-3391-04	SMALL FIXED INDUCTOR	
L101		*	L92-0180-05	FERRITE CHIP	
L102			L41-3391-04	SMALL FIXED INDUCTOR	
L103-105			L40-5685-34	SMALL FIXED INDUCTOR (560NH)	
L106			L40-1875-34	SMALL FIXED INDUCTOR (18NH)	
L108,109		*	L34-4604-05	AIR-CORE COIL	
L110		*	L34-4605-05	AIR-CORE COIL	
L111		*	L34-4603-05	AIR-CORE COIL	
L116		*	L34-4604-05	AIR-CORE COIL	
L117		*	L34-4605-05	AIR-CORE COIL	
L118,119		*	L34-4604-05	AIR-CORE COIL	
L121,122			L40-6865-92	SMALL FIXED INDUCTOR (6.8NH)	

K : TS-2000 (K) **KX : TS-2000X (K)**
E : TS-2000 (E) **E2 : TS-2000 (E2)**

PARTS LIST

TX-RX 2 UNIT (X57-606X-XX)

Ref. No.	Address	New parts	Parts No.	Description	Destination
L123		*	L34-4605-05	AIR-CORE COIL	
L124			L40-4763-92	SMALL FIXED INDUCTOR (4.7NH)	
L125			L40-1575-92	SMALL FIXED INDUCTOR (15NH)	
L128		*	L34-4605-05	AIR-CORE COIL	
L129		*	L34-4603-05	AIR-CORE COIL	
L130		*	L41-3391-04	SMALL FIXED INDUCTOR	
L131			L40-5675-92	SMALL FIXED INDUCTOR (56NH)	
L132			L40-1875-34	SMALL FIXED INDUCTOR (18NH)	
L133		*	L34-4605-05	AIR-CORE COIL	
L134			L40-1085-92	SMALL FIXED INDUCTOR (100NH)	
L137		*	L34-4603-05	AIR-CORE COIL	
L139			L40-4775-92	SMALL FIXED INDUCTOR (47NH)	
L140			L40-8265-92	SMALL FIXED INDUCTOR (8.2NH)	
L141		*	L34-4604-05	AIR-CORE COIL	
L142-144			L40-1085-92	SMALL FIXED INDUCTOR (100NH)	
L145			L40-1585-92	SMALL FIXED INDUCTOR (150NH)	
L146			L40-4775-92	SMALL FIXED INDUCTOR (47NH)	
L147			L40-5685-34	SMALL FIXED INDUCTOR (560NH)	
L148			L40-1095-34	SMALL FIXED INDUCTOR (1UH)	
L149			L40-4775-34	SMALL FIXED INDUCTOR (47NH)	
L151			L40-1585-92	SMALL FIXED INDUCTOR (150NH)	
L154			L40-1085-92	SMALL FIXED INDUCTOR (100NH)	
L155			L40-2785-34	SMALL FIXED INDUCTOR (270NH)	
L156			L40-3985-34	SMALL FIXED INDUCTOR (390NH)	
L157			L40-6885-34	SMALL FIXED INDUCTOR (680NH)	
L158			L40-1575-34	SMALL FIXED INDUCTOR (15NH)	
L159		*	L41-3391-04	SMALL FIXED INDUCTOR	
L160			L40-1585-92	SMALL FIXED INDUCTOR (150NH)	
L161			L40-4775-92	SMALL FIXED INDUCTOR (47NH)	
L162			L40-6875-92	SMALL FIXED INDUCTOR (68NH)	
L163,164			L34-4080-05	COIL	
L165			L40-2285-92	SMALL FIXED INDUCTOR (220NH)	
L166,167			L40-4785-34	SMALL FIXED INDUCTOR (470NH)	
L168			L40-1085-92	SMALL FIXED INDUCTOR (100NH)	
L169			L40-1085-34	SMALL FIXED INDUCTOR (100NH)	
L170			L40-1575-92	SMALL FIXED INDUCTOR (15NH)	
L171			L40-4791-37	SMALL FIXED INDUCTOR (4.700UH)	
L172			L40-5685-34	SMALL FIXED INDUCTOR (560NH)	
L400,401		*	L41-2791-04	SMALL FIXED INDUCTOR	
L402,403		*	L34-4572-05	AIR-CORE COIL	
L404			L40-1085-92	SMALL FIXED INDUCTOR (100NH)	
L405			L40-1075-92	SMALL FIXED INDUCTOR (10NH)	
L406		*	L41-4791-04	SMALL FIXED INDUCTOR	
L407			L34-4573-05	AIR-CORE COIL	
L408		*	L34-4572-05	AIR-CORE COIL	
L409,410		*	L40-1015-85	SMALL FIXED INDUCTOR (100U)	
L411		*	L40-2288-76	SMALL FIXED INDUCTOR (0.22UH)	
L412			L40-6888-76	SMALL FIXED INDUCTOR (0.68UH)	
L413			L34-4636-05	COIL	
L414			L40-2295-85	SMALL FIXED INDUCTOR (2.2U)	
L415			L40-1875-54	SMALL FIXED INDUCTOR (18NH)	
L416			L40-1885-54	SMALL FIXED INDUCTOR (180NH)	
L417			L40-1575-92	SMALL FIXED INDUCTOR (15NH)	
L418			L40-1875-92	SMALL FIXED INDUCTOR (18NH)	
L419			L40-1005-85	SMALL FIXED INDUCTOR (10U)	
L420,421			L40-1075-34	SMALL FIXED INDUCTOR (10NH)	
L422			L34-4345-05	COIL	
L423			L40-6875-34	SMALL FIXED INDUCTOR (68NH)	
L424			L40-1005-85	SMALL FIXED INDUCTOR (10U)	
L425			L40-2295-85	SMALL FIXED INDUCTOR (2.2U)	

Ref. No.	Address	New parts	Parts No.	Description	Destination
L426			L40-3975-34	SMALL FIXED INDUCTOR (39NH)	
L427			L34-4345-05	COIL	
L428			L40-1005-85	SMALL FIXED INDUCTOR (10U)	
L429		*	L40-4705-85	SMALL FIXED INDUCTOR (47U)	
L430			L40-6875-34	SMALL FIXED INDUCTOR (68NH)	
L431			L40-2295-85	SMALL FIXED INDUCTOR (2.2U)	
L432			L40-1271-34	SMALL FIXED INDUCTOR (12NH)	
L433			L40-1005-85	SMALL FIXED INDUCTOR (10U)	
L434			L40-1085-34	SMALL FIXED INDUCTOR (100NH)	
L435			L40-1575-34	SMALL FIXED INDUCTOR (15NH)	
L436			L40-1585-34	SMALL FIXED INDUCTOR (150NH)	
L437			L40-2295-85	SMALL FIXED INDUCTOR (2.2U)	
L438			L40-1005-85	SMALL FIXED INDUCTOR (10U)	
L439			L40-1885-34	SMALL FIXED INDUCTOR (180NH)	
L440			L40-1005-85	SMALL FIXED INDUCTOR (10U)	
L441			L40-1595-34	SMALL FIXED INDUCTOR (1.5UH)	
L442			L40-2785-34	SMALL FIXED INDUCTOR (270NH)	
L443			L40-1005-85	SMALL FIXED INDUCTOR (10U)	
L444,445		*	L40-1295-85	SMALL FIXED INDUCTOR (1.2U)	
L446		*	L41-6891-04	SMALL FIXED INDUCTOR	
L447		*	L40-1295-85	SMALL FIXED INDUCTOR (1.2U)	
L448,449			L40-1005-85	SMALL FIXED INDUCTOR (10U)	
L450			L34-4636-05	COIL	
L451			L40-1005-85	SMALL FIXED INDUCTOR (10U)	
L452		*	L41-1591-04	SMALL FIXED INDUCTOR	
L453			L40-3995-34	SMALL FIXED INDUCTOR (3.9UH)	
L454,455			L40-1005-85	SMALL FIXED INDUCTOR (10U)	
L456			L40-1595-34	SMALL FIXED INDUCTOR (1.5UH)	
L457,458			L40-3995-34	SMALL FIXED INDUCTOR (3.9UH)	
L459		*	L41-1001-04	SMALL FIXED INDUCTOR	
L460,461			L40-1005-85	SMALL FIXED INDUCTOR (10U)	
L462		*	L40-4795-85	SMALL FIXED INDUCTOR (4.7U)	
L463		*	L40-2278-60	SMALL FIXED INDUCTOR (22NH)	
L464		*	L40-4795-85	SMALL FIXED INDUCTOR (4.7U)	
L465			L40-1095-34	SMALL FIXED INDUCTOR (1UH)	
L466			L40-1005-34	SMALL FIXED INDUCTOR (10UH)	
L467			L40-3995-34	SMALL FIXED INDUCTOR (3.9UH)	
L468,469		*	L40-5695-85	SMALL FIXED INDUCTOR (5.6U)	
L470			L40-1585-34	SMALL FIXED INDUCTOR (150NH)	
L471		*	L40-4795-85	SMALL FIXED INDUCTOR (4.7U)	
L472		*	L40-6878-60	SMALL FIXED INDUCTOR (68NH)	
L473			L40-1005-34	SMALL FIXED INDUCTOR (10UH)	
L474			L40-1595-34	SMALL FIXED INDUCTOR (1.5UH)	
L475		*	L40-5695-85	SMALL FIXED INDUCTOR (5.6U)	
L476		*	L41-6891-04	SMALL FIXED INDUCTOR	
L477			L40-2285-92	SMALL FIXED INDUCTOR (220NH)	
L478			L40-1005-34	SMALL FIXED INDUCTOR (10UH)	
L479		*	L34-4636-05	COIL	
L480			L40-2285-92	SMALL FIXED INDUCTOR (220NH)	
L481			L40-1271-34	SMALL FIXED INDUCTOR (12NH)	
L482			L40-2775-34	SMALL FIXED INDUCTOR (27NH)	
L483			L40-3995-34	SMALL FIXED INDUCTOR (3.9UH)	
L485,486			L40-1005-85	SMALL FIXED INDUCTOR (10U)	
L487		*	L40-1015-85	SMALL FIXED INDUCTOR (100U)	
L488			L40-1005-85	SMALL FIXED INDUCTOR (10U)	
L490			L40-1585-34	SMALL FIXED INDUCTOR (150NH)	
L492,493		*	L41-2291-04	SMALL FIXED INDUCTOR	
L494			L34-2360-05	COIL	
L495			L34-4356-05	COIL	
L496			L40-1005-85	SMALL FIXED INDUCTOR (10U)	

K : TS-2000 (K) **KX : TS-2000X (K)**
E : TS-2000 (E) **E2 : TS-2000 (E2)**

PARTS LIST

TX-RX 2 UNIT (X57-606X-XX)

Ref. No.	Address	New parts	Parts No.	Description	Destination
L497			L40-1095-34	SMALL FIXED INDUCTOR (1UH)	
L498			L40-1005-85	SMALL FIXED INDUCTOR (10U)	
L500			L40-2285-34	SMALL FIXED INDUCTOR (220NH)	
L501			L40-1005-85	SMALL FIXED INDUCTOR (10U)	
L502			L40-1595-34	SMALL FIXED INDUCTOR (1.5UH)	
L503		*	L41-2291-04	SMALL FIXED INDUCTOR	
L504			L34-2358-05	COIL	
L505			L40-1595-34	SMALL FIXED INDUCTOR (1.5UH)	
L506			L40-3375-34	SMALL FIXED INDUCTOR (33NH)	
L507			L40-1005-85	SMALL FIXED INDUCTOR (10U)	
L508		*	L40-1015-85	SMALL FIXED INDUCTOR (100U)	
L509			L40-1005-85	SMALL FIXED INDUCTOR (10U)	
L510		*	L40-1015-85	SMALL FIXED INDUCTOR (100U)	
L511			L40-1005-85	SMALL FIXED INDUCTOR (10U)	
L512		*	L40-1015-85	SMALL FIXED INDUCTOR (100U)	
L513,514			L40-6875-92	SMALL FIXED INDUCTOR (68NH)	
L515,516			L40-1005-85	SMALL FIXED INDUCTOR (10U)	
L517,518			L40-1271-34	SMALL FIXED INDUCTOR (12NH)	
L519			L40-1015-85	SMALL FIXED INDUCTOR (100U)	
L520,521			L40-1575-34	SMALL FIXED INDUCTOR (15NH)	
L522,523			L40-2775-34	SMALL FIXED INDUCTOR (27NH)	
L524			L40-5675-34	SMALL FIXED INDUCTOR (56NH)	
L525			L40-3375-34	SMALL FIXED INDUCTOR (33NH)	
L526			L40-1875-34	SMALL FIXED INDUCTOR (18NH)	
L527			L40-3375-34	SMALL FIXED INDUCTOR (33NH)	
L528-530			L40-1875-34	SMALL FIXED INDUCTOR (18NH)	
L531			L40-1095-34	SMALL FIXED INDUCTOR (1UH)	
L532			L40-6875-34	SMALL FIXED INDUCTOR (68NH)	
L533,534			L40-1005-85	SMALL FIXED INDUCTOR (10U)	
L535,536			L40-2785-34	SMALL FIXED INDUCTOR (270NH)	
L537			L40-1075-92	SMALL FIXED INDUCTOR (10NH)	
X1		*	L77-1828-05	CRYSTAL RESONATOR (58.07M)	
X400		*	L77-1820-05	TCXO (15.600MHZ)	
XF1		*	L71-0566-05	MCF (41.895M)	
XF2		*	L71-0565-05	MCF (58.525M)	
XF3		*	L71-0582-05	MCF (41.795MHZ)	
S	1B		N87-2605-46	BRAZIER HEAD TAPTITE SCREW	
R1			R92-1252-05	CHIP R 0 OHM	
R2,3			RK73GB1J102J	CHIP R 1.0K J 1/16W	
R4,5			RK73GB1J222J	CHIP R 2.2K J 1/16W	
R6,7			RK73GB1J102J	CHIP R 1.0K J 1/16W	
R8,9			RK73GB1J222J	CHIP R 2.2K J 1/16W	
R10			RK73GB1J103J	CHIP R 10K J 1/16W	
R11			RK73GB1J100J	CHIP R 10 J 1/16W	
R12			RK73GB1J393J	CHIP R 39K J 1/16W	
R13,14			RK73GB1J103J	CHIP R 10K J 1/16W	
R15			RK73GB1J153J	CHIP R 15K J 1/16W	E,E2
R15			RK73GB1J472J	CHIP R 4.7K J 1/16W	K,KX
R16			RK73GB1J103J	CHIP R 10K J 1/16W	
R17			RK73GB1J274J	CHIP R 270K J 1/16W	
R18			RK73GB1J271J	CHIP R 270 J 1/16W	
R19			RK73GB1J102J	CHIP R 1.0K J 1/16W	
R20			RK73GB1J274J	CHIP R 270K J 1/16W	
R21			RK73GB1J471J	CHIP R 470 J 1/16W	
R22			RK73GB1J470J	CHIP R 47 J 1/16W	
R23			RK73GB1J222J	CHIP R 2.2K J 1/16W	
R24			RK73GB1J331J	CHIP R 330 J 1/16W	
R25			RK73GB1J101J	CHIP R 100 J 1/16W	

Ref. No.	Address	New parts	Parts No.	Description	Destination
R26			RK73GB1J471J	CHIP R 470 J 1/16W	
R27			RK73GB1J101J	CHIP R 100 J 1/16W	
R28,29			RK73GB1J471J	CHIP R 470 J 1/16W	
R30			RK73GB1J472J	CHIP R 4.7K J 1/16W	E,E2
R31			RK73GB1J471J	CHIP R 470 J 1/16W	
R32			RK73GB1J561J	CHIP R 560 J 1/16W	
R33			RK73GB1J3R3J	CHIP R 3.3 J 1/16W	
R34			RK73GB1J561J	CHIP R 560 J 1/16W	
R35,36			RK73GB1J102J	CHIP R 1.0K J 1/16W	
R37			RK73GB1J222J	CHIP R 2.2K J 1/16W	
R38			RK73GB1J332J	CHIP R 3.3K J 1/16W	
R39			RK73GB1J102J	CHIP R 1.0K J 1/16W	
R40			RK73GB1J222J	CHIP R 2.2K J 1/16W	
R41			RK73FB2A221J	CHIP R 220 J 1/10W	
R42			RK73GB1J103J	CHIP R 10K J 1/16W	
R43			RK73GB1J331J	CHIP R 330 J 1/16W	
R44			RK73GB1J101J	CHIP R 100 J 1/16W	
R45,46			RK73GB1J102J	CHIP R 1.0K J 1/16W	
R47			RK73GB1J181J	CHIP R 180 J 1/16W	
R48-50			RK73GB1J101J	CHIP R 100 J 1/16W	
R51			RK73GB1J472J	CHIP R 4.7K J 1/16W	
R52			RK73GB1J272J	CHIP R 2.7K J 1/16W	
R53			RK73GB1J332J	CHIP R 3.3K J 1/16W	
R54			RK73GB1J272J	CHIP R 2.7K J 1/16W	
R55-59			RK73GB1J102J	CHIP R 1.0K J 1/16W	
R60			RK73GB1J104J	CHIP R 100K J 1/16W	
R61,62			RK73GB1J222J	CHIP R 2.2K J 1/16W	
R63			RK73GB1J471J	CHIP R 470 J 1/16W	
R64			RK73GB1J104J	CHIP R 100K J 1/16W	
R66			RK73GB1J101J	CHIP R 100 J 1/16W	
R67-70			RK73GB1J104J	CHIP R 100K J 1/16W	
R71			RK73GB1J472J	CHIP R 4.7K J 1/16W	
R72			RK73GB1J272J	CHIP R 2.7K J 1/16W	
R73			RK73FB2A470J	CHIP R 47 J 1/10W	
R74			RK73GB1J222J	CHIP R 2.2K J 1/16W	
R75			RK73FB2A220J	CHIP R 22 J 1/10W	
R76			RK73GB1J472J	CHIP R 4.7K J 1/16W	
R77			RK73GB1J272J	CHIP R 2.7K J 1/16W	
R79			RK73GB1J181J	CHIP R 180 J 1/16W	
R80			RK73FB2A470J	CHIP R 47 J 1/10W	
R81			RK73GB1J152J	CHIP R 1.5K J 1/16W	
R82			RK73GB1J103J	CHIP R 10K J 1/16W	
R83			RK73FB2A220J	CHIP R 22 J 1/10W	
R84			RK73GB1J823J	CHIP R 82K J 1/16W	
R85			RK73GB1J333J	CHIP R 33K J 1/16W	
R86			RK73GB1J473J	CHIP R 47K J 1/16W	
R87			RK73GB1J103J	CHIP R 10K J 1/16W	
R88			RK73GB1J472J	CHIP R 4.7K J 1/16W	
R89			RK73GB1J272J	CHIP R 2.7K J 1/16W	
R90			RK73FB2A470J	CHIP R 47 J 1/10W	
R91			RK73GB1J222J	CHIP R 2.2K J 1/16W	
R92			RK73GB1J104J	CHIP R 100K J 1/16W	
R93			RK73GB1J102J	CHIP R 1.0K J 1/16W	
R94			RK73GB1J471J	CHIP R 470 J 1/16W	
R95			RK73GB1J472J	CHIP R 4.7K J 1/16W	
R96			RK73GB1J272J	CHIP R 2.7K J 1/16W	
R97			RK73GB1J120J	CHIP R 12 J 1/16W	E,E2
R97			RK73GB1J150J	CHIP R 15 J 1/16W	K,KX
R98			RK73GB1J103J	CHIP R 10K J 1/16W	
R99			RK73GB1J222J	CHIP R 2.2K J 1/16W	

K : TS-2000 (K) **KX : TS-2000X (K)**
E : TS-2000 (E) **E2 : TS-2000 (E2)**

PARTS LIST

TX-RX 2 UNIT (X57-606X-XX)

Ref. No.	Address	New parts	Parts No.	Description	Destination
R100			RK73GB1J104J	CHIP R 100K J 1/16W	
R101			RK73FB2A470J	CHIP R 47 J 1/10W	
R102			RK73GB1J222J	CHIP R 2.2K J 1/16W	
R103			RK73FB2A220J	CHIP R 22 J 1/10W	
R104,105			RK73GB1J101J	CHIP R 100 J 1/16W	
R106			RK73FB2A470J	CHIP R 47 J 1/10W	
R107			RK73GB1J222J	CHIP R 2.2K J 1/16W	
R108			RK73FB2A470J	CHIP R 47 J 1/10W	
R109			RK73GB1J181J	CHIP R 180 J 1/16W	
R110,111			RK73GB1J104J	CHIP R 100K J 1/16W	
R112,113			RK73GB1J472J	CHIP R 4.7K J 1/16W	
R114			RK73GB1J272J	CHIP R 2.7K J 1/16W	
R115			RK73GB1J104J	CHIP R 100K J 1/16W	
R116,117			R92-1252-05	CHIP R 0 OHM	
R118			RK73GB1J272J	CHIP R 2.7K J 1/16W	
R119			R92-1252-05	CHIP R 0 OHM	
R120,121			RK73GB1J104J	CHIP R 100K J 1/16W	
R124			RK73GB1J102J	CHIP R 1.0K J 1/16W	
R125			RK73GB1J104J	CHIP R 100K J 1/16W	
R126-128			RK73GB1J102J	CHIP R 1.0K J 1/16W	
R130			RK73GB1J561J	CHIP R 560 J 1/16W	
R131			RK73GB1J102J	CHIP R 1.0K J 1/16W	
R132			RK73GB1J3R3J	CHIP R 3.3 J 1/16W	
R133			RK73GB1J102J	CHIP R 1.0K J 1/16W	
R135,136			RK73GB1J104J	CHIP R 100K J 1/16W	
R137			RK73GB1J821J	CHIP R 820 J 1/16W	
R139			RK73GB1J104J	CHIP R 100K J 1/16W	
R140			RK73GB1J331J	CHIP R 330 J 1/16W	
R141			RK73GB1J102J	CHIP R 1.0K J 1/16W	
R142,143			RK73GB1J101J	CHIP R 100 J 1/16W	
R146,147			RK73GB1J222J	CHIP R 2.2K J 1/16W	
R149			RK73GB1J331J	CHIP R 330 J 1/16W	
R150,151			RK73GB1J561J	CHIP R 560 J 1/16W	
R152			RK73GB1J102J	CHIP R 1.0K J 1/16W	
R153			RK73GB1J180J	CHIP R 18 J 1/16W	
R154			RK73GB1J3R3J	CHIP R 3.3 J 1/16W	
R155			RK73GB1J390J	CHIP R 39 J 1/16W	
R156			RK73GB1J561J	CHIP R 560 J 1/16W	
R157			RK73GB1J331J	CHIP R 330 J 1/16W	
R158			RK73GB1J102J	CHIP R 1.0K J 1/16W	
R159			RK73GB1J390J	CHIP R 39 J 1/16W	
R160-163			RK73GB1J102J	CHIP R 1.0K J 1/16W	
R164			RK73GB1J470J	CHIP R 47 J 1/16W	
R165			RK73GB1J332J	CHIP R 3.3K J 1/16W	
R166			R92-1252-05	CHIP R 0 OHM	
R167			RK73GB1J681J	CHIP R 680 J 1/16W	
R168			RK73GB1J330J	CHIP R 33 J 1/16W	
R169			RK73GB1J181J	CHIP R 180 J 1/16W	
R170			RK73GB1J472J	CHIP R 4.7K J 1/16W	
R171			RK73GB1J272J	CHIP R 2.7K J 1/16W	
R172			RK73GB1J101J	CHIP R 100 J 1/16W	
R173			RK73GB1J121J	CHIP R 120 J 1/16W	
R174			RK73GB1J270J	CHIP R 27 J 1/16W	
R175			RK73GB1J330J	CHIP R 33 J 1/16W	
R176			RK73GB1J562J	CHIP R 5.6K J 1/16W	
R177			RK73GB1J182J	CHIP R 1.8K J 1/16W	
R178			RK73GB1J472J	CHIP R 4.7K J 1/16W	
R179			RK73GB1J272J	CHIP R 2.7K J 1/16W	
R180			RK73GB1J562J	CHIP R 5.6K J 1/16W	
R181			RK73GB1J182J	CHIP R 1.8K J 1/16W	
R185			RK73GB1J102J	CHIP R 1.0K J 1/16W	
R187			RK73GB1J393J	CHIP R 39K J 1/16W	
R188			RK73GB1J104J	CHIP R 100K J 1/16W	
R189			RK73GB1J273J	CHIP R 27K J 1/16W	
R190			RK73GB1J180J	CHIP R 18 J 1/16W	
R191			RK73GB1J273J	CHIP R 27K J 1/16W	
R192			R92-1252-05	CHIP R 0 OHM	
R194			RK73GB1J471J	CHIP R 470 J 1/16W	
R195			RK73GB1J823J	CHIP R 82K J 1/16W	
R196			RK73GB1J103J	CHIP R 10K J 1/16W	
R197-199			RK73GB1J101J	CHIP R 100 J 1/16W	
R200			RK73GB1J182J	CHIP R 1.8K J 1/16W	
R201			RK73GB1J273J	CHIP R 27K J 1/16W	
R202			RK73GB1J471J	CHIP R 470 J 1/16W	
R203			RK73GB1J102J	CHIP R 1.0K J 1/16W	
R204			RK73GB1J184J	CHIP R 180K J 1/16W	
R205			RK73GB1J102J	CHIP R 1.0K J 1/16W	
R206			RK73GB1J154J	CHIP R 150K J 1/16W	
R207			R92-1252-05	CHIP R 0 OHM	
R208			RK73GB1J332J	CHIP R 3.3K J 1/16W	
R209			R92-1252-05	CHIP R 0 OHM	
R210			RK73GB1J102J	CHIP R 1.0K J 1/16W	
R211			RK73GB1J153J	CHIP R 15K J 1/16W	E,E2
R212			RK73GB1J563J	CHIP R 56K J 1/16W	
R213,214			RK73GB1J222J	CHIP R 2.2K J 1/16W	
R215			RK73GB1J101J	CHIP R 100 J 1/16W	
R216			RK73GB1J333J	CHIP R 33K J 1/16W	
R217			RK73GB1J103J	CHIP R 10K J 1/16W	
R218			RK73GB1J102J	CHIP R 1.0K J 1/16W	
R219			RK73GB1J101J	CHIP R 100 J 1/16W	
R220,221			RK73GB1J223J	CHIP R 22K J 1/16W	E,E2
R222			RK73GB1J682J	CHIP R 6.8K J 1/16W	
R223			RK73GB1J100J	CHIP R 10 J 1/16W	
R224			RK73GB1J221J	CHIP R 220 J 1/16W	
R225,226			RK73GB1J223J	CHIP R 22K J 1/16W	E,E2
R229			RK73GB1J822J	CHIP R 8.2K J 1/16W	
R230			R92-1252-05	CHIP R 0 OHM	
R231			RK73GB1J331J	CHIP R 330 J 1/16W	
R232			RK73GB1J221J	CHIP R 220 J 1/16W	
R233			RK73GB1J223J	CHIP R 22K J 1/16W	
R235			RK73GB1J473J	CHIP R 47K J 1/16W	
R236			RK73GB1J153J	CHIP R 15K J 1/16W	E,E2
R237,238			RK73GB1J331J	CHIP R 330 J 1/16W	
R240,241			RK73GB1J330J	CHIP R 33 J 1/16W	
R242			RK73GB1J222J	CHIP R 2.2K J 1/16W	
R245			RK73GB1J183J	CHIP R 18K J 1/16W	
R246,247			RK73GB1J680J	CHIP R 68 J 1/16W	
R248			RK73GB1J103J	CHIP R 10K J 1/16W	
R250			RK73GB1J271J	CHIP R 270 J 1/16W	
R254			RK73GB1J100J	CHIP R 10 J 1/16W	
R255			RK73GB1J472J	CHIP R 4.7K J 1/16W	
R256			RK73GB1J180J	CHIP R 18 J 1/16W	
R257			RK73GB1J103J	CHIP R 10K J 1/16W	
R258			RK73GB1J180J	CHIP R 18 J 1/16W	
R259,260			RK73GB1J222J	CHIP R 2.2K J 1/16W	
R262			RK73GB1J332J	CHIP R 3.3K J 1/16W	
R263			RK73GB1J180J	CHIP R 18 J 1/16W	
R265			RK73GB1J221J	CHIP R 220 J 1/16W	
R266			RK73GB1J223J	CHIP R 22K J 1/16W	
R267			RK73GB1J822J	CHIP R 8.2K J 1/16W	

K : TS-2000 (K) **KX : TS-2000X (K)**
E : TS-2000 (E) **E2 : TS-2000 (E2)**

PARTS LIST

TX-RX 2 UNIT (X57-606X-XX)

Ref. No.	Address	New parts	Parts No.	Description	Destination
R268			RK73GB1J274J	CHIP R 270K J 1/16W	
R269			RK73GB1J564J	CHIP R 560K J 1/16W	
R271			RK73GB1J223J	CHIP R 22K J 1/16W	
R272			RK73GB1J104J	CHIP R 100K J 1/16W	
R276			RK73GB1J101J	CHIP R 100 J 1/16W	
R277			RK73GB1J183J	CHIP R 18K J 1/16W	
R278			RK73GB1J182J	CHIP R 1.8K J 1/16W	
R286			R92-1252-05	CHIP R 0 OHM	
R287			RK73GB1J563J	CHIP R 56K J 1/16W	
R288			RK73GB1J102J	CHIP R 1.0K J 1/16W	
R289			RK73GB1J103J	CHIP R 10K J 1/16W	
R291			RK73GB1J471J	CHIP R 470 J 1/16W	
R295			RK73GB1J102J	CHIP R 1.0K J 1/16W	
R296			RK73GB1J471J	CHIP R 470 J 1/16W	
R297,298			RK73GB1J102J	CHIP R 1.0K J 1/16W	
R300,301			RK73GB1J560J	CHIP R 56 J 1/16W	
R303			RK73GB1J151J	CHIP R 150 J 1/16W	
R304,305			R92-1252-05	CHIP R 0 OHM	K,KX
R306			RK73GB1J182J	CHIP R 1.8K J 1/16W	
R307,308			RK73GB1J103J	CHIP R 10K J 1/16W	
R309			RK73GB1J182J	CHIP R 1.8K J 1/16W	
R310			RK73GB1J472J	CHIP R 4.7K J 1/16W	
R311,312			R92-1252-05	CHIP R 0 OHM	
R313			RK73GB1J103J	CHIP R 10K J 1/16W	
R314,315			RK73GB1J472J	CHIP R 4.7K J 1/16W	
R316			RK73GB1J103J	CHIP R 10K J 1/16W	
R317			RK73GB1J471J	CHIP R 470 J 1/16W	
R319,320			RK73GB1J331J	CHIP R 330 J 1/16W	
R321			RK73GB1J820J	CHIP R 82 J 1/16W	
R322			RK73GB1J102J	CHIP R 1.0K J 1/16W	
R323			RK73GB1J331J	CHIP R 330 J 1/16W	
R325-327			RK73GB1J101J	CHIP R 100 J 1/16W	
R328			RK73GB1J102J	CHIP R 1.0K J 1/16W	
R329			RK73GB1J682J	CHIP R 6.8K J 1/16W	
R333			RK73GB1J153J	CHIP R 15K J 1/16W	
R335			RK73GB1J102J	CHIP R 1.0K J 1/16W	
R336			RK73GB1J470J	CHIP R 47 J 1/16W	
R337			RK73GB1J330J	CHIP R 33 J 1/16W	
R338			RK73GB1J152J	CHIP R 1.5K J 1/16W	
R340			R92-1252-05	CHIP R 0 OHM	
R342			RK73GB1J104J	CHIP R 100K J 1/16W	
R343,344			RK73GB1J331J	CHIP R 330 J 1/16W	
R345			RK73GB1J682J	CHIP R 6.8K J 1/16W	
R346,347			RK73GB1J103J	CHIP R 10K J 1/16W	
R348			RK73GB1J182J	CHIP R 1.8K J 1/16W	
R349			R92-1252-05	CHIP R 0 OHM	E,E2
R349,350			R92-1252-05	CHIP R 0 OHM	K,KX
R350			RK73GB1J100J	CHIP R 10 J 1/16W	E,E2
R351			RK73GB1J823J	CHIP R 82K J 1/16W	
R352			RK73GB1J104J	CHIP R 100K J 1/16W	
R353			RK73GB1J103J	CHIP R 10K J 1/16W	
R354			R92-1252-05	CHIP R 0 OHM	
R355			RK73GB1J472J	CHIP R 4.7K J 1/16W	
R356			RK73GB1J103J	CHIP R 10K J 1/16W	
R357			RK73GB1J470J	CHIP R 47 J 1/16W	
R358			R92-1252-05	CHIP R 0 OHM	
R359			RK73GB1J223J	CHIP R 22K J 1/16W	
R360			RK73GB1J474J	CHIP R 470K J 1/16W	
R361			RK73GB1J272J	CHIP R 2.7K J 1/16W	
R362			R92-1252-05	CHIP R 0 OHM	

Ref. No.	Address	New parts	Parts No.	Description	Destination
R363			RK73GB1J153J	CHIP R 15K J 1/16W	
R365			R92-1252-05	CHIP R 0 OHM	
R366			RK73GB1J221J	CHIP R 220 J 1/16W	
R368			RK73GB1J221J	CHIP R 220 J 1/16W	
R369			RK73FB2A393J	CHIP R 39K J 1/10W	
R370			RK73GB1J471J	CHIP R 470 J 1/16W	
R371			RK73GB1J822J	CHIP R 8.2K J 1/16W	
R372			RK73GB1J153J	CHIP R 15K J 1/16W	
R373			RK73GB1J391J	CHIP R 390 J 1/16W	
R374-376			RK73GB1J101J	CHIP R 100 J 1/16W	
R377			RK73GB1J560J	CHIP R 56 J 1/16W	
R378			RK73GB1J224J	CHIP R 220K J 1/16W	
R379			RK73GB1J474J	CHIP R 470K J 1/16W	
R380			RK73GB1J684J	CHIP R 680K J 1/16W	
R381			RK73GB1J104J	CHIP R 100K J 1/16W	
R382			RK73GB1J474J	CHIP R 470K J 1/16W	
R383			RK73GB1J391J	CHIP R 390 J 1/16W	
R384			R92-1252-05	CHIP R 0 OHM	
R385-387			R92-0679-05	CHIP R 0 OHM	
R388,389			R92-0670-05	CHIP R 0 OHM	
R390			RK73GB1J102J	CHIP R 1.0K J 1/16W	
R391			R92-0679-05	CHIP R 0 OHM	
R392			RK73GB1J273J	CHIP R 27K J 1/16W	
R393			R92-1252-05	CHIP R 0 OHM	
R394			R92-0679-05	CHIP R 0 OHM	
R395			R92-0670-05	CHIP R 0 OHM	
R396-398			R92-1252-05	CHIP R 0 OHM	
R399			RK73FB2A100J	CHIP R 10 J 1/10W	E,E2
R399			RK73FB2A6R8J	CHIP R 6.8 J 1/10W	K,KX
R400-411			RK73GB1J101J	CHIP R 100 J 1/16W	
R412-417			R92-1252-05	CHIP R 0 OHM	
R418			RK73GB1J101J	CHIP R 100 J 1/16W	
R419-421			RK73GB1J102J	CHIP R 1.0K J 1/16W	
R422			RK73GB1J222J	CHIP R 2.2K J 1/16W	
R423			R92-1252-05	CHIP R 0 OHM	
R424			RK73GB1J101J	CHIP R 100 J 1/16W	
R427			RK73GB1J101J	CHIP R 100 J 1/16W	
R428-431			RK73GB1J123J	CHIP R 12K J 1/16W	
R432			R92-1252-05	CHIP R 0 OHM	
R433,434			RK73GB1J473J	CHIP R 47K J 1/16W	
R435			RK73GB1J474J	CHIP R 470K J 1/16W	
R436			RK73GB1J103J	CHIP R 10K J 1/16W	
R437			RK73GB1J332J	CHIP R 3.3K J 1/16W	
R438			RK73GB1J102J	CHIP R 1.0K J 1/16W	
R439,440			RK73GB1J220J	CHIP R 22 J 1/16W	
R441			RK73GB1J181J	CHIP R 180 J 1/16W	
R442			RK73GB1J102J	CHIP R 1.0K J 1/16W	
R443,444			RK73GB1J101J	CHIP R 100 J 1/16W	
R445			RK73GB1J682J	CHIP R 6.8K J 1/16W	
R447,448			RK73GB1J101J	CHIP R 100 J 1/16W	
R449			RK73GB1J103J	CHIP R 10K J 1/16W	
R450			RK73GB1J224J	CHIP R 220K J 1/16W	
R451			RK73GB1J391J	CHIP R 390 J 1/16W	
R452			R92-1252-05	CHIP R 0 OHM	
R453			RK73GB1J153J	CHIP R 15K J 1/16W	
R454			RK73GB1J682J	CHIP R 6.8K J 1/16W	
R455			RK73GB1J153J	CHIP R 15K J 1/16W	
R456			RK73GB1J682J	CHIP R 6.8K J 1/16W	
R457			RK73GB1J470J	CHIP R 47 J 1/16W	
R458			RK73GB1J153J	CHIP R 15K J 1/16W	

K : TS-2000 (K) KX : TS-2000X (K)
E : TS-2000 (E) E2 : TS-2000 (E2)

PARTS LIST

TX-RX 2 UNIT (X57-606X-XX)

Ref. No.	Address	New parts	Parts No.	Description	Destination
R459			RK73GB1J682J	CHIP R 6.8K J 1/16W	
R460			RK73GB1J220J	CHIP R 22 J 1/16W	
R461			RK73GB1J181J	CHIP R 180 J 1/16W	
R462			RK73GB1J470J	CHIP R 47 J 1/16W	
R463			RK73GB1J181J	CHIP R 180 J 1/16W	
R464,465			RK73GB1J101J	CHIP R 100 J 1/16W	
R466			RK73GB1J470J	CHIP R 47 J 1/16W	
R467			RK73GB1J181J	CHIP R 180 J 1/16W	
R468			RK73GB1J470J	CHIP R 47 J 1/16W	
R469			RK73GB1J391J	CHIP R 390 J 1/16W	
R470			RK73GB1J120J	CHIP R 12 J 1/16W	
R471			R92-1252-05	CHIP R 0 OHM	
R472			RK73GB1J470J	CHIP R 47 J 1/16W	
R473			RK73GB1J181J	CHIP R 180 J 1/16W	
R474			RK73GB1J391J	CHIP R 390 J 1/16W	
R475			RK73GB1J181J	CHIP R 180 J 1/16W	
R476			R92-1252-05	CHIP R 0 OHM	
R477			RK73GB1J153J	CHIP R 15K J 1/16W	
R478			RK73GB1J682J	CHIP R 6.8K J 1/16W	
R479			RK73GB1J681J	CHIP R 680 J 1/16W	
R480			RK73GB1J101J	CHIP R 100 J 1/16W	
R481-483			R92-1252-05	CHIP R 0 OHM	
R484			RK73GB1J470J	CHIP R 47 J 1/16W	
R485,486			R92-1252-05	CHIP R 0 OHM	
R487			RK73GB1J151J	CHIP R 150 J 1/16W	
R488			RK73GB1J153J	CHIP R 15K J 1/16W	
R489			RK73GB1J682J	CHIP R 6.8K J 1/16W	
R490			R92-1252-05	CHIP R 0 OHM	
R491			RK73GB1J390J	CHIP R 39 J 1/16W	
R492			R92-1252-05	CHIP R 0 OHM	
R493			RK73GB1J151J	CHIP R 150 J 1/16W	
R494			RK73GB1J271J	CHIP R 270 J 1/16W	
R495			RK73GB1J103J	CHIP R 10K J 1/16W	
R496			RK73GB1J472J	CHIP R 4.7K J 1/16W	
R497			RK73GB1J101J	CHIP R 100 J 1/16W	
R498			RK73GB1J822J	CHIP R 8.2K J 1/16W	
R499			RK73GB1J153J	CHIP R 15K J 1/16W	
R500			RK73GB1J472J	CHIP R 4.7K J 1/16W	
R501			RK73GB1J153J	CHIP R 15K J 1/16W	
R502			RK73GB1J682J	CHIP R 6.8K J 1/16W	
R503			RK73GB1J181J	CHIP R 180 J 1/16W	
R504			RK73GB1J470J	CHIP R 47 J 1/16W	
R505			RK73GB1J391J	CHIP R 390 J 1/16W	
R506			RK73GB1J821J	CHIP R 820 J 1/16W	
R507			RK73GB1J121J	CHIP R 120 J 1/16W	
R508			RK73GB1J820J	CHIP R 82 J 1/16W	
R509			RK73GB1J5R6J	CHIP R 5.6 J 1/16W	
R510			RK73GB1J101J	CHIP R 100 J 1/16W	
R511			RK73GB1J821J	CHIP R 820 J 1/16W	
R512			RK73GB1J470J	CHIP R 47 J 1/16W	
R513			RK73GB1J820J	CHIP R 82 J 1/16W	
R514,515			R92-1252-05	CHIP R 0 OHM	
R516			RK73GB1J101J	CHIP R 100 J 1/16W	
R517-519			RK73GB1J470J	CHIP R 47 J 1/16W	
R520,521			RK73GB1J823J	CHIP R 82K J 1/16W	
R522,523			RK73GB1J561J	CHIP R 560 J 1/16W	
R524			RK73GB1J823J	CHIP R 82K J 1/16W	
R525,526			RK73GB1J392J	CHIP R 3.9K J 1/16W	
R527			RK73GB1J561J	CHIP R 560 J 1/16W	
R528			RK73GB1J682J	CHIP R 6.8K J 1/16W	
R529,530			RK73GB1J101J	CHIP R 100 J 1/16W	
R531			RK73GB1J392J	CHIP R 3.9K J 1/16W	
R532			RK73GB1J470J	CHIP R 47 J 1/16W	
R533			RK73GB1J151J	CHIP R 150 J 1/16W	
R534			RK73GB1J682J	CHIP R 6.8K J 1/16W	
R535			RK73GB1J470J	CHIP R 47 J 1/16W	
R536			RK73GB1J153J	CHIP R 15K J 1/16W	
R537,538			RK73GB1J331J	CHIP R 330 J 1/16W	
R539			RK73GB1J271J	CHIP R 270 J 1/16W	
R540			RK73GB1J470J	CHIP R 47 J 1/16W	
R541			RK73GB1J101J	CHIP R 100 J 1/16W	
R542			RK73GB1J822J	CHIP R 8.2K J 1/16W	
R543			RK73GB1J153J	CHIP R 15K J 1/16W	
R544			RK73GB1J101J	CHIP R 100 J 1/16W	
R545			RK73GB1J822J	CHIP R 8.2K J 1/16W	
R546			RK73GB1J153J	CHIP R 15K J 1/16W	
R547,548			RK73GB1J391J	CHIP R 390 J 1/16W	
R549			RK73GB1J331J	CHIP R 330 J 1/16W	
R550			RK73GB1J221J	CHIP R 220 J 1/16W	
R551			RK73GB1J331J	CHIP R 330 J 1/16W	
R552			RK73GB1J221J	CHIP R 220 J 1/16W	
R553			RK73GB1J331J	CHIP R 330 J 1/16W	
R554			RK73GB1J101J	CHIP R 100 J 1/16W	
R555			RK73GB1J822J	CHIP R 8.2K J 1/16W	
R556			RK73GB1J153J	CHIP R 15K J 1/16W	
R557			RK73GB1J101J	CHIP R 100 J 1/16W	
R558			RK73GB1J181J	CHIP R 180 J 1/16W	
R559			RK73GB1J391J	CHIP R 390 J 1/16W	
R560			RK73GB1J153J	CHIP R 15K J 1/16W	
R561			RK73GB1J682J	CHIP R 6.8K J 1/16W	
R562			RK73GB1J331J	CHIP R 330 J 1/16W	
R563			RK73GB1J221J	CHIP R 220 J 1/16W	
R564			RK73GB1J271J	CHIP R 270 J 1/16W	
R565			RK73GB1J150J	CHIP R 15 J 1/16W	
R566			RK73GB1J221J	CHIP R 220 J 1/16W	
R567			RK73GB1J470J	CHIP R 47 J 1/16W	
R568			RK73GB1J181J	CHIP R 180 J 1/16W	
R569			RK73GB1J150J	CHIP R 15 J 1/16W	
R570			R92-1252-05	CHIP R 0 OHM	
R571			RK73GB1J153J	CHIP R 15K J 1/16W	
R572			RK73GB1J682J	CHIP R 6.8K J 1/16W	
R573			RK73GB1J101J	CHIP R 100 J 1/16W	
R574			RK73GB1J150J	CHIP R 15 J 1/16W	
R575			R92-1252-05	CHIP R 0 OHM	
R576			RK73GB1J470J	CHIP R 47 J 1/16W	
R577			RK73GB1J181J	CHIP R 180 J 1/16W	
R578			R92-1252-05	CHIP R 0 OHM	
R579			RK73GB1J101J	CHIP R 100 J 1/16W	
R580			R92-1252-05	CHIP R 0 OHM	
R581			RK73GB1J682J	CHIP R 6.8K J 1/16W	
R583			RK73GB1J101J	CHIP R 100 J 1/16W	
R585			RK73GB1J101J	CHIP R 100 J 1/16W	
R586			RK73GB1J472J	CHIP R 4.7K J 1/16W	
R587			RK73GB1J101J	CHIP R 100 J 1/16W	
R588			RK73GB1J470J	CHIP R 47 J 1/16W	
R589			RK73GB1J151J	CHIP R 150 J 1/16W	
R593			RK73GB1J682J	CHIP R 6.8K J 1/16W	
R596			RK73GB1J153J	CHIP R 15K J 1/16W	
R598			RK73GB1J271J	CHIP R 270 J 1/16W	
R600			RK73GB1J470J	CHIP R 47 J 1/16W	

K : TS-2000 (K) **KX : TS-2000X (K)**
E : TS-2000 (E) **E2 : TS-2000 (E2)**

PARTS LIST

TX-RX 2 UNIT (X57-606X-XX)

Ref. No.	Address	New parts	Parts No.	Description	Destination
R602			RK73GB1J151J	CHIP R 150 J 1/16W	
R603			RK73GB1J390J	CHIP R 39 J 1/16W	
R604-606			RK73GB1J101J	CHIP R 100 J 1/16W	
R607			RK73GB1J182J	CHIP R 1.8K J 1/16W	
R608			RK73GB1J151J	CHIP R 150 J 1/16W	
R609			RK73GB1J101J	CHIP R 100 J 1/16W	
R610			RK73GB1J182J	CHIP R 1.8K J 1/16W	
R611			RK73GB1J222J	CHIP R 2.2K J 1/16W	
R612			R92-1252-05	CHIP R 0 OHM	
R613			RK73GB1J150J	CHIP R 15 J 1/16W	
R614			RK73GB1J222J	CHIP R 2.2K J 1/16W	
R615			R92-1252-05	CHIP R 0 OHM	
R616			RK73GB1J151J	CHIP R 150 J 1/16W	
R617			RK73GB1J472J	CHIP R 4.7K J 1/16W	
R618			RK73GB1J390J	CHIP R 39 J 1/16W	
R619,620			RK73GB1J101J	CHIP R 100 J 1/16W	
R621			RK73GB1J150J	CHIP R 15 J 1/16W	
R622			RK73GB1J101J	CHIP R 100 J 1/16W	
R623,624			RK73GB1J151J	CHIP R 150 J 1/16W	
R625			R92-1252-05	CHIP R 0 OHM	
R626			RK73GB1J474J	CHIP R 470K J 1/16W	
R627			RK73GB1J150J	CHIP R 15 J 1/16W	
R628			R92-1252-05	CHIP R 0 OHM	
R629			RK73GB1J474J	CHIP R 470K J 1/16W	
R630			RK73GB1J390J	CHIP R 39 J 1/16W	
R631			RK73GB1J102J	CHIP R 1.0K J 1/16W	
R632			RK73GB1J151J	CHIP R 150 J 1/16W	
R633,634			RK73GB1J150J	CHIP R 15 J 1/16W	
R635			RK73GB1J681J	CHIP R 680 J 1/16W	
R636			RK73GB1J271J	CHIP R 270 J 1/16W	
R637,638			RK73GB1J682J	CHIP R 6.8K J 1/16W	
R639			RK73GB1J681J	CHIP R 680 J 1/16W	
R640			RK73GB1J222J	CHIP R 2.2K J 1/16W	
R641			RK73GB1J470J	CHIP R 47 J 1/16W	
R642			RK73GB1J153J	CHIP R 15K J 1/16W	
R643			RK73GB1J682J	CHIP R 6.8K J 1/16W	
R644			RK73GB1J180J	CHIP R 18 J 1/16W	
R645			RK73GB1J222J	CHIP R 2.2K J 1/16W	
R646			RK73GB1J271J	CHIP R 270 J 1/16W	
R647			RK73GB1J102J	CHIP R 1.0K J 1/16W	
R648			RK73GB1J471J	CHIP R 470 J 1/16W	
R649			RK73GB1J472J	CHIP R 4.7K J 1/16W	
R650			RK73GB1J102J	CHIP R 1.0K J 1/16W	
R651			RK73GB1J391J	CHIP R 390 J 1/16W	
R652			R92-1252-05	CHIP R 0 OHM	
R653			RK73GB1J391J	CHIP R 390 J 1/16W	
R654,655			R92-1252-05	CHIP R 0 OHM	
R656			RK73GB1J472J	CHIP R 4.7K J 1/16W	
R657			RK73GB1J153J	CHIP R 15K J 1/16W	
R658			RK73GB1J682J	CHIP R 6.8K J 1/16W	
R659,660			RK73GB1J102J	CHIP R 1.0K J 1/16W	
R661			RK73GB1J150J	CHIP R 15 J 1/16W	
R663			RK73GB1J471J	CHIP R 470 J 1/16W	
R664			RK73GB1J151J	CHIP R 150 J 1/16W	
R665			RK73GB1J102J	CHIP R 1.0K J 1/16W	
R666			RK73GB1J390J	CHIP R 39 J 1/16W	
R667			RK73GB1J150J	CHIP R 15 J 1/16W	
R668			RK73GB1J101J	CHIP R 100 J 1/16W	
R669			RK73GB1J150J	CHIP R 15 J 1/16W	
R670			RK73GB1J470J	CHIP R 47 J 1/16W	
R671			RK73GB1J151J	CHIP R 150 J 1/16W	
R675			RK73GB1J391J	CHIP R 390 J 1/16W	
R676			RK73GB1J151J	CHIP R 150 J 1/16W	
R677,678			RK73GB1J101J	CHIP R 100 J 1/16W	
R680			RK73GB1J390J	CHIP R 39 J 1/16W	
R681-683			R92-1252-05	CHIP R 0 OHM	
R685			R92-1252-05	CHIP R 0 OHM	
R686			RK73GB1J151J	CHIP R 150 J 1/16W	
R687			R92-1252-05	CHIP R 0 OHM	
R689,690			R92-1252-05	CHIP R 0 OHM	
R692			RK73GB1J101J	CHIP R 100 J 1/16W	
R693			RK73GB1J102J	CHIP R 1.0K J 1/16W	
R694			RK73GB1J153J	CHIP R 15K J 1/16W	
R695			RK73GB1J682J	CHIP R 6.8K J 1/16W	
R696			RK73GB1J470J	CHIP R 47 J 1/16W	
R697			RK73GB1J121J	CHIP R 120 J 1/16W	
R698			RK73GB1J682J	CHIP R 6.8K J 1/16W	
R699			RK73GB1J391J	CHIP R 390 J 1/16W	
R700			R92-1252-05	CHIP R 0 OHM	
R701			RK73GB1J102J	CHIP R 1.0K J 1/16W	
R702,703			RK73GB1J103J	CHIP R 10K J 1/16W	
R710-713			RK73GB1J472J	CHIP R 4.7K J 1/16W	
R714,715			RK73GB1J101J	CHIP R 100 J 1/16W	
R716-719			RK73GB1J102J	CHIP R 1.0K J 1/16W	
R720			RK73GB1J182J	CHIP R 1.8K J 1/16W	
R721			R92-1252-05	CHIP R 0 OHM	
R722,723			RK73GB1J101J	CHIP R 100 J 1/16W	
R724,725			RK73GB1J102J	CHIP R 1.0K J 1/16W	
R726			RK73GB1J101J	CHIP R 100 J 1/16W	
R727			RK73GB1J680J	CHIP R 68 J 1/16W	
R728-731			RK73GB1J102J	CHIP R 1.0K J 1/16W	
R732,733			R92-1252-05	CHIP R 0 OHM	
R734			RK73GB1J101J	CHIP R 100 J 1/16W	
R735,736			RK73GB1J391J	CHIP R 390 J 1/16W	
R737			RK73GB1J103J	CHIP R 10K J 1/16W	
R738			RK73GB1J120J	CHIP R 12 J 1/16W	
R739,740			RK73GB1J472J	CHIP R 4.7K J 1/16W	
R741			RK73GB1J120J	CHIP R 12 J 1/16W	
R742,743			RK73GB1J472J	CHIP R 4.7K J 1/16W	
R744			RK73GB1J271J	CHIP R 270 J 1/16W	
R745,746			RK73GB1J391J	CHIP R 390 J 1/16W	
R747			RK73GB1J180J	CHIP R 18 J 1/16W	
R749,750			RK73GB1J102J	CHIP R 1.0K J 1/16W	
R751			RK73GB1J271J	CHIP R 270 J 1/16W	
R752			RK73GB1J102J	CHIP R 1.0K J 1/16W	
R753,754			R92-1252-05	CHIP R 0 OHM	
R755			RK73GB1J470J	CHIP R 47 J 1/16W	
R756			RK73GB1J153J	CHIP R 15K J 1/16W	
R757			RK73GB1J682J	CHIP R 6.8K J 1/16W	
R758			RK73GB1J102J	CHIP R 1.0K J 1/16W	
R759			RK73GB1J181J	CHIP R 180 J 1/16W	
R760-762			RK73GB1J102J	CHIP R 1.0K J 1/16W	
R763			RK73GB1J472J	CHIP R 4.7K J 1/16W	
R764,765			RK73GB1J102J	CHIP R 1.0K J 1/16W	
R766			RK73GB1J271J	CHIP R 270 J 1/16W	
R767			RK73GB1J180J	CHIP R 18 J 1/16W	
R768-770			RK73GB1J271J	CHIP R 270 J 1/16W	
R771,772			RK73GB1J180J	CHIP R 18 J 1/16W	
R773,774			RK73GB1J271J	CHIP R 270 J 1/16W	
R775			R92-1252-05	CHIP R 0 OHM	

K : TS-2000 (K) KX : TS-2000X (K)
E : TS-2000 (E) E2 : TS-2000 (E2)

PARTS LIST

TX-RX 2 UNIT (X57-606X-XX)

Ref. No.	Address	New parts	Parts No.	Description	Destination
D6,7			RN731V	DIODE	
D9-11			HSC277	DIODE	
D12			RN731V	DIODE	
D13			HSC277	DIODE	
D14			RN731V	DIODE	
D15			HSC277	DIODE	
D16			HVC131	DIODE	
D17			HSC277	DIODE	
D18			HVC131	DIODE	
D19			RN731V	DIODE	
D20			HSC277	DIODE	
D21			RN731V	DIODE	
D22-24			HSC277	DIODE	
D30-34			HVC350B	VARIABLE CAPACITANCE DIODE	
D36,37			HVC350B	VARIABLE CAPACITANCE DIODE	
D39-43			HVC350B	VARIABLE CAPACITANCE DIODE	
D46			DAN235E	DIODE	
D47			HVC350B	VARIABLE CAPACITANCE DIODE	
D48,49			HSC277	DIODE	
D51			HVC350B	VARIABLE CAPACITANCE DIODE	
D52,53			DAN235E	DIODE	
D54			HSB88WS	DIODE	
D56			DAN235E	DIODE	K,KX
D56,57			DAN235E	DIODE	E,E2
D58			RB706F-40	DIODE	
D59			DAN235E	DIODE	E,E2
D63-66			1SS355	DIODE	
D68			DAN222	DIODE	
D69			1SS355	DIODE	
D71			1SS355	DIODE	
D73,74			DAN222	DIODE	
D75,76			1SS355	DIODE	
D77,78			MA742	DIODE	
D79,80			HVC350B	VARIABLE CAPACITANCE DIODE	
D81,82			HVC131	DIODE	
D83			MA742	DIODE	
D84-88			HVC350B	VARIABLE CAPACITANCE DIODE	
D89			DTZ3.9(B)	ZENER DIODE	
D90,91			HSC277	DIODE	
D92-94			HVC131	DIODE	
D95			HSC277	DIODE	
D96,97			HVC131	DIODE	
D98			DAN222	DIODE	
D99			1SS355	DIODE	
D100			HVC350B	VARIABLE CAPACITANCE DIODE	
D101			HSC277	DIODE	
D400			MA2S111	DIODE	
D401,402			KV1460	VARIABLE CAPACITANCE DIODE	
D403			MA2S304	VARIABLE CAPACITANCE DIODE	
D404,405			MA2S077	DIODE	
D406			MA2S304	VARIABLE CAPACITANCE DIODE	
D407			MA2S111	DIODE	
D408			KV1460	VARIABLE CAPACITANCE DIODE	
D409-412			1SV283	VARIABLE CAPACITANCE DIODE	
D413			KV1460	VARIABLE CAPACITANCE DIODE	
D416,417			1SV283	VARIABLE CAPACITANCE DIODE	
D418,419			MA2S077	DIODE	
D420			1SV283	VARIABLE CAPACITANCE DIODE	
D421			MA2S077	DIODE	
D422,423			MA2S111	DIODE	

Ref. No.	Address	New parts	Parts No.	Description	Destination
D426-429			RN731V	DIODE	
D430-437			MA2S077	DIODE	
D438			MA2S111	DIODE	
D439-444			MA2S077	DIODE	
D445-447			MA2S111	DIODE	
IC2			BU2099FV	IC	
IC3			UPC1678G	IC	
IC4,5			GN2011(Q)	IC	
IC6			UPB1509GV	IC	
IC7			TA31136FN	IC	
IC8			TC4W53FU	IC	
IC9			NJM2904V	IC	
IC400			TA7808F	IC	
IC401		*	LMX2306TMX	IC	
IC402		*	LMX2316TMX	IC	
IC403			TA7805F	IC	
IC404			BU4094BCFV	IC	
IC405		*	UPC2709TB	IC	
IC406-408			AD9835BRU	IC	
IC409-412		*	LMX2306TMX	IC	
IC414		*	LMX2306TMX	IC	
IC415,416		*	UPC2709TB	IC	
Q1,2			DTC114EUA	DIGITAL TRANSISTOR	
Q3			FMA5	TRANSISTOR	
Q11			UMC2N	TRANSISTOR	
Q13			FMA5	TRANSISTOR	
Q14,15			3SK241(R)	FET	
Q16			UMC2N	TRANSISTOR	
Q17,18			2SC3356	TRANSISTOR	
Q19			2SC5066(O)	TRANSISTOR	
Q20			2SK302(GR)	FET	
Q21,22			2SC3357	TRANSISTOR	
Q23			3SK298	FET	
Q24,25			2SC3357	TRANSISTOR	
Q26			2SC3356	TRANSISTOR	
Q30			2SC3356	TRANSISTOR	
Q31			UMC2N	TRANSISTOR	
Q32-34			2SC3356	TRANSISTOR	
Q35			DTA114EUA	DIGITAL TRANSISTOR	
Q36			UMC2N	TRANSISTOR	
Q37			3SK298	FET	
Q38			3SK131(M)	FET	
Q39			2SC4617(R)	TRANSISTOR	
Q40			DTA114EUA	DIGITAL TRANSISTOR	E,E2
Q41			DTC144EUA	DIGITAL TRANSISTOR	E,E2
Q42,43			2SK520(K43)	FET	
Q44,45			2SC4617(R)	TRANSISTOR	
Q46,47			3SK131(M)	FET	
Q48			2SC4617(R)	TRANSISTOR	
Q50,51			2SC4617(R)	TRANSISTOR	
Q55,56			2SB1132(Q,R)	TRANSISTOR	
Q57-60			DTC114EUA	DIGITAL TRANSISTOR	
Q61			2SC3356	TRANSISTOR	
Q62			2SA1362(Y)	TRANSISTOR	
Q63			2SC4617(S)	TRANSISTOR	
Q65			2SC4617(R)	TRANSISTOR	
Q66		*	FMA1A	TRANSISTOR	
Q67			DTA114EUA	DIGITAL TRANSISTOR	
Q400-402			2SC3722K(R)	TRANSISTOR	
Q403-405			DTC114EUA	DIGITAL TRANSISTOR	

K : TS-2000 (K) **KX : TS-2000X (K)**
E : TS-2000 (E) **E2 : TS-2000 (E2)**

PARTS LIST

TX-RX 2 UNIT (X57-606X-XX)
TX-RX 3 UNIT (X57-6070-00) : KX

Ref. No.	Address	New parts	Parts No.	Description	Destination
Q406,407			2SK508NV(K52)	FET	
Q409			2SK508NV(K52)	FET	
Q410,411			2SC4116(Y)	TRANSISTOR	
Q412			2SC4617(R)	TRANSISTOR	
Q413,414			2SC5108(Y)	TRANSISTOR	
Q415			2SC4649(N,P)	TRANSISTOR	
Q416			2SC5108(Y)	TRANSISTOR	
Q417-420			2SC4617(R)	TRANSISTOR	
Q421			2SC4649(N,P)	TRANSISTOR	
Q423-425			2SC4617(R)	TRANSISTOR	
Q426			DTC114EUA	DIGITAL TRANSISTOR	
Q427			2SK508NV(K52)	FET	
Q428-430			2SC4617(R)	TRANSISTOR	
Q431			2SK508NV(K52)	FET	
Q432			2SC4617(R)	TRANSISTOR	
Q433			2SK508NV(K52)	FET	
Q434			DTC114EUA	DIGITAL TRANSISTOR	
Q435			2SC5108(Y)	TRANSISTOR	
Q436			DTC114EUA	DIGITAL TRANSISTOR	
Q437			2SC5108(Y)	TRANSISTOR	
Q438			2SC4617(R)	TRANSISTOR	
Q439			DTC114EUA	DIGITAL TRANSISTOR	
Q441			2SK508NV(K52)	FET	
Q444			2SC4617(R)	TRANSISTOR	
Q446			2SC4617(R)	TRANSISTOR	
Q447-452			2SC3722K(R)	TRANSISTOR	
Q453,454			DTC114EUA	DIGITAL TRANSISTOR	
Q455			2SC4617(R)	TRANSISTOR	
Q457			2SC5108(Y)	TRANSISTOR	
Q458			2SC4617(R)	TRANSISTOR	
Q459,460			2SK508NV(K52)	FET	
Q461			2SC5108(Y)	TRANSISTOR	
Q462			2SC4649(N,P)	TRANSISTOR	
Q463			DTC114EUA	DIGITAL TRANSISTOR	
Q464			2SK508NV(K52)	FET	
Q469-472			UMC2N	TRANSISTOR	
Q473			2SC4617(R)	TRANSISTOR	
Q474			UMC2N	TRANSISTOR	
Q476			2SC4649(N,P)	TRANSISTOR	
TH1			157-502-65001	THERMISTOR	
TH2			157-102-65001	THERMISTOR	
-		*	X57-606D	VCO PCB	
-		*	X57-606E	VCO PCB	
-		*	X57-606G	VCO PCB	
-		*	X57-606H	VCO PCB	
-		*	X57-606I	VCO PCB	
-		*	X57-606J	VCO PCB	
-		*	X57-606K	VCO PCB	

TX-RX 3 UNIT (X57-6070-00) : KX

C1			CK73GB1H103K	CHIP C	0.010UF	K	
C2			CK73GB1H471K	CHIP C	470PF	K	
C3			CC73GCH1H470J	CHIP C	47PF	J	
C4			CK73GB1H103K	CHIP C	0.010UF	K	
C5,6			CC73GCH1H100D	CHIP C	10PF	D	
C7			CK73GB1H102K	CHIP C	1000PF	K	
C8			CK73GB1H103K	CHIP C	0.010UF	K	
C9			CC73GCH1H100D	CHIP C	10PF	D	
C10			CK73GB1H102K	CHIP C	1000PF	K	
C11,12			CK73GB1H103K	CHIP C	0.010UF	K	
C13			CC73GCH1H050C	CHIP C	5.0PF	C	
C14,15			CK73GB1H102K	CHIP C	1000PF	K	
C16			CK73GB1H471K	CHIP C	470PF	K	
C18			CC73GCH1H470J	CHIP C	47PF	J	
C19			CC73GCH1H060D	CHIP C	6.0PF	D	
C20,21			CK73GB1H102K	CHIP C	1000PF	K	
C22			CC73GCH1H470J	CHIP C	47PF	J	
C24			CC73GCH1H220J	CHIP C	22PF	J	
C25			CC73GCH1H470J	CHIP C	47PF	J	
C26			CC73GCH1H030C	CHIP C	3.0PF	C	
C27,28			CC73GCH1H470J	CHIP C	47PF	J	
C29			CK73GB1H471K	CHIP C	470PF	K	
C32			CK73GB1H471K	CHIP C	470PF	K	
C33,34			CC73GCH1H470J	CHIP C	47PF	J	
C36			CK73GB1C104K	CHIP C	0.10UF	K	
C37			CC73GCH1H030C	CHIP C	3.0PF	C	
C38			CK73GB1H471K	CHIP C	470PF	K	
C40			CC73GCH1H470J	CHIP C	47PF	J	
C41			CK73GB1H102K	CHIP C	1000PF	K	
C42			C92-0719-05	ELECTRO	47UF	25WV	
C43			CK73GB1H102K	CHIP C	1000PF	K	
C44			C92-0719-05	ELECTRO	47UF	25WV	
C45			CK73GB1H102K	CHIP C	1000PF	K	
C46			CC73GCH1H470J	CHIP C	47PF	J	
C48			CK73GB1H471K	CHIP C	470PF	K	
C49			C92-0719-05	ELECTRO	47UF	25WV	
C51			CK73GB1H102K	CHIP C	1000PF	K	
C52			CC73GCH1H470J	CHIP C	47PF	J	
C53			CK73GB1H471K	CHIP C	470PF	K	
C54			C92-0719-05	ELECTRO	47UF	25WV	
C55			CK73GB1H102K	CHIP C	1000PF	K	
C56			CC73GCH1H470J	CHIP C	47PF	J	
C57			CK73GB1H471K	CHIP C	470PF	K	
C58			C92-0719-05	ELECTRO	47UF	25WV	
C59			CK73GB1H471K	CHIP C	470PF	K	
C60			CK73GB1H102K	CHIP C	1000PF	K	
C61			CC73GCH1H470J	CHIP C	47PF	J	
C63			C92-0720-05	ELECTRO	100UF	25WV	
C64			CK73GB1H471K	CHIP C	470PF	K	
C65			CC73GCH1H470J	CHIP C	47PF	J	
C66			CC73GCH1H010B	CHIP C	1.0PF	B	
C67			CC73GCH1H470J	CHIP C	47PF	J	
C68			CC73GCH1H010B	CHIP C	1.0PF	B	
C69,70			CC73GCH1H470J	CHIP C	47PF	J	
C71			CK73GB1H471K	CHIP C	470PF	K	
C72			CC73GCH1H470J	CHIP C	47PF	J	
C74			CK73GB1H471K	CHIP C	470PF	K	
C75			CM73F2H470J	CHIP C	47PF	J	
C76			CK73GB1H471K	CHIP C	470PF	K	
C78			CC73GCH1H470J	CHIP C	47PF	J	
C79-83			CC73GCH1H101J	CHIP C	100PF	J	
C84-90			CK73GB1H103K	CHIP C	0.010UF	K	
C91			CK73GB1H102K	CHIP C	1000PF	K	
C92			CC73GCH1H070D	CHIP C	7.0PF	D	
C93			CK73GB1H102K	CHIP C	1000PF	K	
C94			CC73GCH1H050C	CHIP C	5.0PF	C	
C95			CC73GCH1H010B	CHIP C	1.0PF	B	
C96,97			CK73GB1H102K	CHIP C	1000PF	K	
C98			CK73GB1C104K	CHIP C	0.10UF	K	

K : TS-2000 (K) **KX : TS-2000X (K)**
E : TS-2000 (E) **E2 : TS-2000 (E2)**

PARTS LIST

TX-RX 3 UNIT (X57-6070-00) : KX

Ref. No.	Address	New parts	Parts No.	Description			Destination
C99			CK73GB1H102K	CHIP C	1000PF	K	
C101			CC73GCH1H020B	CHIP C	2.0PF	B	
C103			CC73GCH1H010B	CHIP C	1.0PF	B	
C104			CK73GB1H471K	CHIP C	470PF	K	
C105			CC73GCH1H470J	CHIP C	47PF	J	
C106			CC73GCH1H060D	CHIP C	6.0PF	D	
C107			CC73GCH1H470J	CHIP C	47PF	J	
C108			CK73GB1H471K	CHIP C	470PF	K	
C109			CC73GCH1H100D	CHIP C	10PF	D	
C110			CC73GCH1HR75B	CHIP C	0.75PF	B	
C111			CK73GB1H471K	CHIP C	470PF	K	
C112			CC73GCH1H101J	CHIP C	100PF	J	
C113			CC73GCH1H020B	CHIP C	2.0PF	B	
C114			CC73GCH1H220J	CHIP C	22PF	J	
C116			CC73GCH1H040C	CHIP C	4.0PF	C	
C117			CC73GCH1H470J	CHIP C	47PF	J	
C118			CC73GCH1H101J	CHIP C	100PF	J	
C119			CK73GB1H103K	CHIP C	0.010UF	K	
C120			CC73GCH1H470J	CHIP C	47PF	J	
C121,122			CK73GB1H471K	CHIP C	470PF	K	
C123			CC73GCH1H470J	CHIP C	47PF	J	
C124			CC73GCH1H101J	CHIP C	100PF	J	
C125			CC73GCH1H1R5B	CHIP C	1.5PF	B	
C126			CC73GCH1H080D	CHIP C	8.0PF	D	
C127			CC73GCH1H010B	CHIP C	1.0PF	B	
C128			CC73GCH1H1R5B	CHIP C	1.5PF	B	
C131-134			CC73GCH1H101J	CHIP C	100PF	J	
C135			CC73GCH1H470J	CHIP C	47PF	J	
C136			CK73GB1H103K	CHIP C	0.010UF	K	
C137			C92-0505-05	CHIP-TAN	10UF	16WV	
C138			CK73GB1H103K	CHIP C	0.010UF	K	
C139,140			CK73GB1H102K	CHIP C	1000PF	K	
C142			CC73GCH1H070D	CHIP C	7.0PF	D	
C143			CK73GB1H102K	CHIP C	1000PF	K	
C144			CC73GCH1H0R3B	CHIP C	0.3PF	B	
C145			CC73GCH1H070D	CHIP C	7.0PF	D	
C147			C92-0505-05	CHIP-TAN	10UF	16WV	
C148			CK73GB1H103K	CHIP C	0.010UF	K	
C149			CK73GB1H102K	CHIP C	1000PF	K	
C150			CC73GCH1H470J	CHIP C	47PF	J	
C151			CK73GB1H103K	CHIP C	0.010UF	K	
C152			CK73GB1H102K	CHIP C	1000PF	K	
C153			CC73GCH1H070D	CHIP C	7.0PF	D	
C154			CK73GB1H102K	CHIP C	1000PF	K	
C155,156			CK73GB1H103K	CHIP C	0.010UF	K	
C158			CC73GCH1H470J	CHIP C	47PF	J	
C165			C92-0523-05	CHIP-ELE	10UF	16WV	
C167			CK73GB1H102K	CHIP C	1000PF	K	
C169			CK73GB1H471K	CHIP C	470PF	K	
C170,171			CK73GB1H102K	CHIP C	1000PF	K	
C172			CK73GB1H103K	CHIP C	0.010UF	K	
C173			CK73GB1H102K	CHIP C	1000PF	K	
C174			CK73GB1H471K	CHIP C	470PF	K	
C176			C92-0719-05	ELECTRO	47UF	25WV	
C178			CK73GB1H102K	CHIP C	1000PF	K	
C179			C92-0523-05	CHIP-ELE	10UF	16WV	
C180			CK73GB1H102K	CHIP C	1000PF	K	
C182			CC73GCH1H470J	CHIP C	47PF	J	
C183			CK73GB1H471K	CHIP C	470PF	K	
C184,185			CC73GCH1H470J	CHIP C	47PF	J	

Ref. No.	Address	New parts	Parts No.	Description			Destination
C186			CK73GB1H471K	CHIP C	470PF	K	
C188			CC73GCH1H040C	CHIP C	4.0PF	C	
C189			CC73GCH1H220J	CHIP C	22PF	J	
C190			CC73GCH1H470J	CHIP C	47PF	J	
C191			CC73GCH1H050C	CHIP C	5.0PF	C	
C192			CK73GB1H471K	CHIP C	470PF	K	
C193			CC73GCH1H100D	CHIP C	10PF	D	
C194			CK73GB1H103K	CHIP C	0.010UF	K	
C195			CC73GCH1H101J	CHIP C	100PF	J	
C301			CK73GB1H471K	CHIP C	470PF	K	
C302,303			CC73GCH1H101J	CHIP C	100PF	J	
C304			CC73GCH1H150J	CHIP C	15PF	J	
C305			CK73GB1H102K	CHIP C	1000PF	K	
C306			CC73GCH1H150J	CHIP C	15PF	J	
C307			CC73GCH1H1R5B	CHIP C	1.5PF	B	
C308			CK73GB1H471K	CHIP C	470PF	K	
C309			CC73GCH1H060D	CHIP C	6.0PF	D	
C310			CC73GCH1H101J	CHIP C	100PF	J	
C311			CC73GCH1H080D	CHIP C	8.0PF	D	
C312			CC73GCH1H020B	CHIP C	2.0PF	B	
C313			CC73GCH1H030C	CHIP C	3.0PF	C	
C314			CC73GCH1H101J	CHIP C	100PF	J	
C315			CC73GCH1H470J	CHIP C	47PF	J	
C316			CC73GCH1H030C	CHIP C	3.0PF	C	
C317,318			CC73GCH1H010B	CHIP C	1.0PF	B	
C319			CC73GCH1H470J	CHIP C	47PF	J	
C320		*	C92-0717-05	ELECTRO	330UF	16WV	
C323			CC73GCH1H470J	CHIP C	47PF	J	
C326,327			CC73GCH1H470J	CHIP C	47PF	J	
C328,329			CK73GB1H103K	CHIP C	0.010UF	K	
C332			CK73GB1C473K	CHIP C	0.047UF	K	
C333,334			C92-0543-05	CHIP-TAN	3.3UF	10WV	
C335			C92-0503-05	CHIP-TAN	0.068UF	35WV	
C336			CK73GB1H182K	CHIP C	1800PF	K	
C367			CC73GCH1H101J	CHIP C	100PF	J	
C368,369			CC73GCH1H020B	CHIP C	2.0PF	B	
C370-374			CK73GB1H103K	CHIP C	0.010UF	K	
C375,376			CC73GCH1H560J	CHIP C	56PF	J	
C377-379			CK73GB1H103K	CHIP C	0.010UF	K	
C381,382			CK73GB1H103K	CHIP C	0.010UF	K	
C383			CC73GCH1H080D	CHIP C	8.0PF	D	
C384-386			CK73GB1H103K	CHIP C	0.010UF	K	
C387			CK73GB1C104K	CHIP C	0.10UF	K	
C388			CC73GCH1H330J	CHIP C	33PF	J	
C389			CC73GCH1H050C	CHIP C	5.0PF	C	
C390-393			CK73GB1H103K	CHIP C	0.010UF	K	
C394			CC73GCH1H010B	CHIP C	1.0PF	B	
C395,396			CC73GCH1H180J	CHIP C	18PF	J	
C397			CK73GB1H103K	CHIP C	0.010UF	K	
C398			CC73GCH1H330J	CHIP C	33PF	J	
C399-401			CK73GB1H103K	CHIP C	0.010UF	K	
C402			CC73GCH1H010B	CHIP C	1.0PF	B	
C403			CC73GCH1H030C	CHIP C	3.0PF	C	
C404			CK73GB1H102K	CHIP C	1000PF	K	
TC301			C05-0393-05	CERAMIC TRIMMER CAP (8P)			
501	3B	*	E30-3457-05	ANTENNA CABLE			
-		*	E37-0894-05	LEAD WIRE WITH TERMINAL (+B)			
-		*	E37-0895-05	LEAD WIRE WITH TERMINAL (GND)			
504	3C	*	E37-0943-05	LEAD WIRE WITH MINIPIN PLUG			
CN1			E40-3237-05	PIN ASSY			

K : TS-2000 (K) **KX : TS-2000X (K)**
E : TS-2000 (E) **E2 : TS-2000 (E2)**

PARTS LIST

TX-RX 3 UNIT (X57-6070-00) : KX

Ref. No.	Address	New parts	Parts No.	Description	Destination
CN5			E40-3239-05	PIN ASSY	
CN6			E40-5978-05	FLAT CABLE CONNECTOR	
CN7,8		*	E04-0428-05	PIN SOCKET	
CN9			E04-0190-05	PIN SOCKET	
CN11-16		*	E04-0428-05	PIN SOCKET	
-		*	F10-2367-04	SHIELDING COVER	
506	3C	*	F10-2368-03	SHIELDING PLATE	
-		*	F10-2390-04	SHIELDING CASE	
-		*	F10-2391-04	SHIELDING CASE	
-		*	F10-2394-04	SHIELDING CASE	
-		*	F10-2396-03	SHIELDING COVER	
511	3C		G10-1218-04	FIBROUS SHEET	
512	3B	*	J21-8401-04	HARDWARE FIXTURE	
CF1,2			L72-0343-05	CERAMIC FILTER	
L1			L92-0158-05	FERRITE CHIP	
L2			L34-4411-05	COIL	
L3		*	L34-4651-05	COIL	
L4			L40-1005-85	SMALL FIXED INDUCTOR (10U)	
L5		*	L34-4651-05	COIL	
L7,8		*	L39-1446-05	TOROIDAL COIL	
L9		*	L34-4644-05	COIL	
L10		*	L79-1766-05	DIELECTRIC FILTER	
L11			L40-1075-92	SMALL FIXED INDUCTOR (10NH)	
L12		*	L79-1766-05	DIELECTRIC FILTER	
L13			L92-0158-05	FERRITE CHIP	
L17-19			L92-0158-05	FERRITE CHIP	
L20,21		*	L92-0403-05	FERRITE CHIP	
L22			L34-4411-05	COIL	
L23			L40-1005-85	SMALL FIXED INDUCTOR (10U)	
L24		*	L34-4644-05	COIL	
L25		*	L34-4651-05	COIL	
L26-28		*	L34-4642-05	COIL	
L29		*	L34-4644-05	COIL	
L30			L79-1133-05	DIELECTRIC FILTER	
L31			L40-8265-92	SMALL FIXED INDUCTOR (8.2NH)	
L32			L40-6865-92	SMALL FIXED INDUCTOR (6.8NH)	
L33		*	L79-1765-05	DIELECTRIC FILTER	
L34			L40-1075-92	SMALL FIXED INDUCTOR (10NH)	
L35		*	L40-5663-92	SMALL FIXED INDUCTOR (5.6NH)	
L36		*	L40-2263-92	SMALL FIXED INDUCTOR (2.2NH)	
L37			L40-6865-92	SMALL FIXED INDUCTOR (6.8NH)	
L38		*	L40-5663-92	SMALL FIXED INDUCTOR (5.6NH)	
L39			L40-1085-85	SMALL FIXED INDUCTOR (0.10U)	
L40,41			L40-1005-85	SMALL FIXED INDUCTOR (10U)	
L42,43		*	L34-4644-05	COIL	
L44			L40-1005-85	SMALL FIXED INDUCTOR (10U)	
L45		*	L34-4644-05	COIL	
L49-51			L40-1005-85	SMALL FIXED INDUCTOR (10U)	
L52		*	L79-1753-05	DIELECTRIC FILTER	
L301			L40-1085-92	SMALL FIXED INDUCTOR (100NH)	
L302		*	L40-1278-60	SMALL FIXED INDUCTOR (12NH)	
L303,304			L40-1085-92	SMALL FIXED INDUCTOR (100NH)	
L305,306			L40-2275-92	SMALL FIXED INDUCTOR (22NH)	
L307,308			L40-8265-92	SMALL FIXED INDUCTOR (8.2NH)	
L309			L40-2275-92	SMALL FIXED INDUCTOR (22NH)	
L310		*	L40-5663-92	SMALL FIXED INDUCTOR (5.6NH)	
L312			L40-4763-92	SMALL FIXED INDUCTOR (4.7NH)	
L315			L40-4763-92	SMALL FIXED INDUCTOR (4.7NH)	

Ref. No.	Address	New parts	Parts No.	Description	Destination
L318,319			L40-2275-92	SMALL FIXED INDUCTOR (22NH)	
L320,321		*	L34-4642-05	COIL	
L322			L40-1875-92	SMALL FIXED INDUCTOR (18NH)	
L323		*	L40-1595-85	SMALL FIXED INDUCTOR (1.5U)	
L332			L92-0158-05	FERRITE CHIP	
L333		*	L92-0403-05	FERRITE CHIP	
L336			L40-2285-92	SMALL FIXED INDUCTOR (220NH)	
L337		*	L40-5663-92	SMALL FIXED INDUCTOR (5.6NH)	
L338			L34-4401-05	COIL	
L339			L34-4026-15	COIL	
L340-342		*	L34-4657-05	COIL	
L343			L40-1005-34	SMALL FIXED INDUCTOR (10UH)	
L344		*	L40-4705-85	SMALL FIXED INDUCTOR (47U)	
L345			L40-1005-34	SMALL FIXED INDUCTOR (10UH)	
L346			L40-1085-92	SMALL FIXED INDUCTOR (100NH)	
L347			L40-4763-92	SMALL FIXED INDUCTOR (4.7NH)	
L348		*	L40-5663-92	SMALL FIXED INDUCTOR (5.6NH)	
XF1		*	L71-0575-05	MCF	
XF2		*	L71-0576-05	MCF	
P	3C		N30-2606-46	PAN HEAD MACHINE SCREW	
-			N67-2608-46	PAN HEAD SEMS SCREW W (IC2, 3)	
R	3C		N87-2606-46	BRAZIER HEAD TAPTITE SCREW	
CP1,2		*	RK75GB1J101J	CHIP-COM 100 J 1/16W	
R2,3			RK73GB1J102J	CHIP R 1.0K J 1/16W	
R4			RK73GB1J103J	CHIP R 10K J 1/16W	
R5			RK73GB1J273J	CHIP R 27K J 1/16W	
R6			RK73GB1J100J	CHIP R 10 J 1/16W	
R7			RK73GB1J102J	CHIP R 1.0K J 1/16W	
R8,9			RK73GB1J680J	CHIP R 68 J 1/16W	
R10			RK73GB1J103J	CHIP R 10K J 1/16W	
R11			RK73GB1J273J	CHIP R 27K J 1/16W	
R12,13			RK73GB1J330J	CHIP R 33 J 1/16W	
R14,15			RK73GB1J331J	CHIP R 330 J 1/16W	
R16			RK73GB1J101J	CHIP R 100 J 1/16W	
R17			RK73GB1J271J	CHIP R 270 J 1/16W	
R18			RK73GB1J180J	CHIP R 18 J 1/16W	
R19			RK73GB1J271J	CHIP R 270 J 1/16W	
R20			RK73GB1J471J	CHIP R 470 J 1/16W	
R21			RK73GB1J271J	CHIP R 270 J 1/16W	
R22			RK73GB1J272J	CHIP R 2.7K J 1/16W	
R23			RK73GB1J180J	CHIP R 18 J 1/16W	
R24			RK73GB1J472J	CHIP R 4.7K J 1/16W	
R25			RK73GB1J271J	CHIP R 270 J 1/16W	
R26			RK73GB1J330J	CHIP R 33 J 1/16W	
R27			RK73GB1J222J	CHIP R 2.2K J 1/16W	
R28			RK73GB1J101J	CHIP R 100 J 1/16W	
R29			RK73GB1J151J	CHIP R 150 J 1/16W	
R30			RK73GB1J390J	CHIP R 39 J 1/16W	
R31			RK73GB1J151J	CHIP R 150 J 1/16W	
R32			RK73GB1J101J	CHIP R 100 J 1/16W	
R34			R92-1252-05	CHIP R 0 OHM	
R35			RK73GB1J680J	CHIP R 68 J 1/16W	
R36			RK73GB1J121J	CHIP R 120 J 1/16W	
R37			RK73GB1J152J	CHIP R 1.5K J 1/16W	
R38,39			RK73GB1J470J	CHIP R 47 J 1/16W	
R40			RK73GB1J271J	CHIP R 270 J 1/16W	
R41			RK73GB1J180J	CHIP R 18 J 1/16W	
R42			RK73GB1J271J	CHIP R 270 J 1/16W	
R43			R92-1259-05	CHIP R 18 J 1/2W	

K : TS-2000 (K) **KX : TS-2000X (K)**
E : TS-2000 (E) **E2 : TS-2000 (E2)**

PARTS LIST

TX-RX 3 UNIT (X57-6070-00) : KX

Ref. No.	Address	New parts	Parts No.	Description	Destination
R44			RK73EB2B560J	CHIP R 56 J 1/8W	
R45			RK73GB1J182J	CHIP R 1.8K J 1/16W	
R46			RK73GB1J103J	CHIP R 10K J 1/16W	
R47			RK73GB1J182J	CHIP R 1.8K J 1/16W	
R48			RK73GB1J103J	CHIP R 10K J 1/16W	
R49			RK73EB2B560J	CHIP R 56 J 1/8W	
R50			R92-0700-05	CHIP R 180 J 1/2W	
R51			RK73GB1J101J	CHIP R 100 J 1/16W	
R52			RK73GB1J821J	CHIP R 820 J 1/16W	
R53			RK73GB1J332J	CHIP R 3.3K J 1/16W	
R54			RK73GB1J101J	CHIP R 100 J 1/16W	
R55			RK73GB1J682J	CHIP R 6.8K J 1/16W	
R56			RK73GB1J680J	CHIP R 68 J 1/16W	
R57,58			RK73GB1J222J	CHIP R 2.2K J 1/16W	
R59			R92-1252-05	CHIP R 0 OHM	
R60			RK73GB1J332J	CHIP R 3.3K J 1/16W	
R61			R92-1252-05	CHIP R 0 OHM	
R62,63			RK73GB1J102J	CHIP R 1.0K J 1/16W	
R64			RK73GB1J101J	CHIP R 100 J 1/16W	
R65			RK73GB1J471J	CHIP R 470 J 1/16W	
R66			RK73GB1J474J	CHIP R 470K J 1/16W	
R67			RK73GB1J823J	CHIP R 82K J 1/16W	
R68			RK73GB1J273J	CHIP R 27K J 1/16W	
R70			RK73GB1J101J	CHIP R 100 J 1/16W	
R71			RK73GB1J471J	CHIP R 470 J 1/16W	
R72			RK73GB1J271J	CHIP R 270 J 1/16W	
R73			RK73GB1J100J	CHIP R 10 J 1/16W	
R74			RK73GB1J180J	CHIP R 18 J 1/16W	
R75			RK73GB1J271J	CHIP R 270 J 1/16W	
R76,77			RK73GB1J221J	CHIP R 220 J 1/16W	
R78			RK73GB1J333J	CHIP R 33K J 1/16W	
R79,80			RK73GB1J473J	CHIP R 47K J 1/16W	
R81			RK73GB1J101J	CHIP R 100 J 1/16W	
R82			RK73GB1J820J	CHIP R 82 J 1/16W	
R83			RK73GB1J470J	CHIP R 47 J 1/16W	
R85			RK73GB1J330J	CHIP R 33 J 1/16W	
R86			RK73GB1J473J	CHIP R 47K J 1/16W	
R87			RK73GB1J102J	CHIP R 1.0K J 1/16W	
R88			RK73GB1J101J	CHIP R 100 J 1/16W	
R89			RK73GB1J102J	CHIP R 1.0K J 1/16W	
R90			RK73GB1J470J	CHIP R 47 J 1/16W	
R91			RK73GB1J103J	CHIP R 10K J 1/16W	
R92			RK73GB1J472J	CHIP R 4.7K J 1/16W	
R93			RK73GB1J823J	CHIP R 82K J 1/16W	
R94			RK73GB1J471J	CHIP R 470 J 1/16W	
R95			RK73GB1J561J	CHIP R 560 J 1/16W	
R96			RK73GB1J101J	CHIP R 100 J 1/16W	
R97			RK73GB1J270J	CHIP R 27 J 1/16W	
R98			RK73GB1J560J	CHIP R 56 J 1/16W	
R99			RK73GB1J332J	CHIP R 3.3K J 1/16W	
R100			RK73GB1J152J	CHIP R 1.5K J 1/16W	
R101			RK73GB1J822J	CHIP R 8.2K J 1/16W	
R102			RK73GB1J153J	CHIP R 15K J 1/16W	
R103			RK73GB1J471J	CHIP R 470 J 1/16W	
R104,105			RK73GB1J101J	CHIP R 100 J 1/16W	
R106			RK73GB1J331J	CHIP R 330 J 1/16W	
R108			RK73GB1J102J	CHIP R 1.0K J 1/16W	
R111			RK73GB1J103J	CHIP R 10K J 1/16W	
R112			RK73GB1J222J	CHIP R 2.2K J 1/16W	
R117			RK73GB1J271J	CHIP R 270 J 1/16W	

Ref. No.	Address	New parts	Parts No.	Description	Destination
R118			RK73GB1J180J	CHIP R 18 J 1/16W	
R119,120			RK73GB1J271J	CHIP R 270 J 1/16W	
R121			RK73GB1J180J	CHIP R 18 J 1/16W	
R122			RK73GB1J271J	CHIP R 270 J 1/16W	
R123			RK73GB1J273J	CHIP R 27K J 1/16W	
R124			RK73GB1J103J	CHIP R 10K J 1/16W	
R125			RK73GB1J470J	CHIP R 47 J 1/16W	
R126			RK73GB1J101J	CHIP R 100 J 1/16W	
R127			R92-1252-05	CHIP R 0 OHM	
R130			RK73GB1J472J	CHIP R 4.7K J 1/16W	
R131			RK73GB1J182J	CHIP R 1.8K J 1/16W	
R132			RK73GB1J180J	CHIP R 18 J 1/16W	
R133			RK73GB1J470J	CHIP R 47 J 1/16W	
R134			RK73GB1J561J	CHIP R 560 J 1/16W	
R135			RK73GB1J560J	CHIP R 56 J 1/16W	
R301			RK73GB1J471J	CHIP R 470 J 1/16W	
R302			RK73GB1J470J	CHIP R 47 J 1/16W	
R303			RK73GB1J121J	CHIP R 120 J 1/16W	
R304			RK73GB1J100J	CHIP R 10 J 1/16W	
R305			RK73GB1J103J	CHIP R 10K J 1/16W	
R306			RK73GB1J332J	CHIP R 3.3K J 1/16W	
R307			RK73GB1J470J	CHIP R 47 J 1/16W	
R309,310			R92-1252-05	CHIP R 0 OHM	
R311			RK73GB1J331J	CHIP R 330 J 1/16W	
R312			RK73GB1J823J	CHIP R 82K J 1/16W	
R314,315			R92-1252-05	CHIP R 0 OHM	
R318			RK73GB1J102J	CHIP R 1.0K J 1/16W	
R319			RK73GB1J823J	CHIP R 82K J 1/16W	
R321			RK73GB1J101J	CHIP R 100 J 1/16W	
R322			RK73GB1J821J	CHIP R 820 J 1/16W	
R323			RK73GB1J220J	CHIP R 22 J 1/16W	
R324			RK73GB1J101J	CHIP R 100 J 1/16W	
R325			RK73GB1J182J	CHIP R 1.8K J 1/16W	
R326			RK73GB1J222J	CHIP R 2.2K J 1/16W	
R327,328			R92-1252-05	CHIP R 0 OHM	
R329			RK73GB1J474J	CHIP R 470K J 1/16W	
R330			RK73GB1J222J	CHIP R 2.2K J 1/16W	
R331			RK73GB1J103J	CHIP R 10K J 1/16W	
R332			R92-1252-05	CHIP R 0 OHM	
R333			RK73GB1J103J	CHIP R 10K J 1/16W	
R334			RK73GB1J392J	CHIP R 3.9K J 1/16W	
R335			R92-1252-05	CHIP R 0 OHM	
R342			R92-1252-05	CHIP R 0 OHM	
R343			RK73GB1J331J	CHIP R 330 J 1/16W	
R351			R92-1252-05	CHIP R 0 OHM	
R359			RK73GB1J101J	CHIP R 100 J 1/16W	
R360			RK73GB1J153J	CHIP R 15K J 1/16W	
R361			RK73GB1J682J	CHIP R 6.8K J 1/16W	
R362			RK73GB1J101J	CHIP R 100 J 1/16W	
R363			RK73GB1J151J	CHIP R 150 J 1/16W	
R364			RK73GB1J101J	CHIP R 100 J 1/16W	
R365			RK73GB1J223J	CHIP R 22K J 1/16W	
R366			RK73GB1J822J	CHIP R 8.2K J 1/16W	
R367			RK73GB1J221J	CHIP R 220 J 1/16W	
R368			R92-1252-05	CHIP R 0 OHM	
R369			RK73GB1J330J	CHIP R 33 J 1/16W	
R370			RK73GB1J183J	CHIP R 18K J 1/16W	
R371-373			RK73GB1J330J	CHIP R 33 J 1/16W	
R374			RK73GB1J103J	CHIP R 10K J 1/16W	
R375			RK73GB1J101J	CHIP R 100 J 1/16W	

K : TS-2000 (K) **KX : TS-2000X (K)**
E : TS-2000 (E) **E2 : TS-2000 (E2)**

PARTS LIST

TX-RX 3 UNIT (X57-6070-00) : KX

Ref. No.	Address	New parts	Parts No.	Description	Destination
R376			RK73GB1J153J	CHIP R 15K J 1/16W	
R377			RK73GB1J682J	CHIP R 6.8K J 1/16W	
R378			RK73GB1J151J	CHIP R 150 J 1/16W	
R379			RK73GB1J101J	CHIP R 100 J 1/16W	
R381			R92-1252-05	CHIP R 0 OHM	
R383			RK73GB1J102J	CHIP R 1.0K J 1/16W	
R384			RK73GB1J470J	CHIP R 47 J 1/16W	
R385,386			RK73GB1J103J	CHIP R 10K J 1/16W	
VR1			R12-6715-05	TRIMMING POT. (22K)	
VR2			R12-6707-05	TRIMMING POT. (1.0K)	
D1			HSB88WS	DIODE	
D2			1SS355	DIODE	
D3,4			HSM88ASR	DIODE	
D5-7			XB15A709	DIODE	
D8			DAN235E	DIODE	
D9			1SS355	DIODE	
D10,11			RN731V	DIODE	
D12			DAN202K	DIODE	
D301			1SV283	VARIABLE CAPACITANCE DIODE	
D302			UDZ4.7(B)	ZENER DIODE	
D303			XB15A709	DIODE	
D304			MA2S111	DIODE	
D305			1SV283	VARIABLE CAPACITANCE DIODE	
IC1		*	UPC2709TB	IC	
IC2			M67715	IC	
IC3			M57762-02	IC	
IC4		*	AD9851BRS	IC	
IC5		*	LMX2316TMX	IC	
Q1,2			3SK131(M)	FET	
Q3			2SC3356	TRANSISTOR	
Q4			UMC4	TRANSISTOR	
Q5			2SC4093	TRANSISTOR	
Q7,8			2SK520(K43)	FET	
Q9			3SK131(M)	FET	
Q10			3SK241(R)	FET	
Q11			2SC5008	TRANSISTOR	
Q12			2SK2685	FET	
Q13			2SC4617(R)	TRANSISTOR	
Q14,15			2SC5108(Y)	TRANSISTOR	
Q16,17			2SC4617(R)	TRANSISTOR	
Q19			2SC3356	TRANSISTOR	
Q20			2SC3357	TRANSISTOR	
Q301			2SK508NV(K52)	FET	
Q302			2SC5066(O)	TRANSISTOR	
Q303,304			2SC4617(R)	TRANSISTOR	
Q305-307			2SC3722K(R)	TRANSISTOR	
Q310-312			2SC4617(R)	TRANSISTOR	
Q313,314			3SK131(M)	FET	
Q315			2SC4617(R)	TRANSISTOR	
TH1			157-102-65001	THERMISTOR	
TH2			157-502-65001	THERMISTOR	

Ref. No.	Address	New parts	Parts No.	Description	Destination

K : TS-2000 (K) KX : TS-2000X (K)
E : TS-2000 (E) E2 : TS-2000 (E2)

EXPLODED VIEW (MAIN BODY)

B : N15-1040-46
E M3 x 6 (OC) BLK : N33-3006-45
F M3 x 8 (Bi) : N35-3008-41
G M3 x 20 (Bi) : N35-3020-46
H M4 x 10 (Bi) : N35-4010-46
J M2.6 x 8 : N67-2608-46
K M4 x 6 : N68-4006-46
L M2.6 x 6 (Br-Tap) : N87-2606-46
M M2.6 x 8 (Br-Tap) : N87-2608-46
P M2.6 x 6 : N30-2606-46
R M2.6 x 6 (Br-Tap) : N87-2606-46
S M2.6 x 5 (Br-Tap) : N87-2605-46

EXPLODED VIEW (FRONT PANEL)

A		: N14-0569-04
C		: N19-0670-05
D		: N19-0673-05
L	M2.6 x 6 (Br-Tap)	: N87-2606-46
M	M2.6 x 8 (Br-Tap)	: N87-2608-46
N	M3 x 8 (TP)	: N90-3008-46

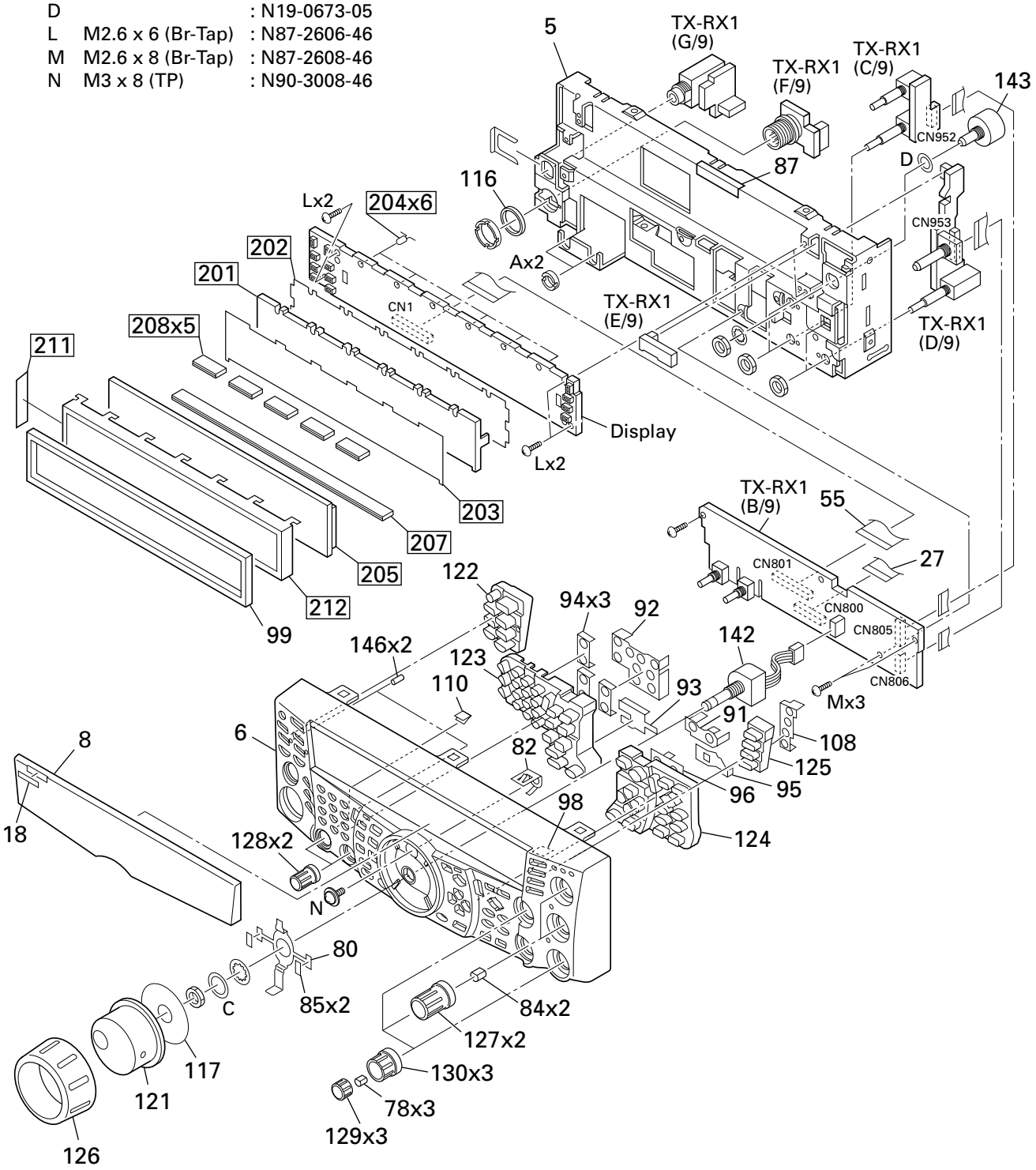

Parts with the exploded numbers larger than 700 are not supplied.

EXPLODED VIEW (CUSHION)

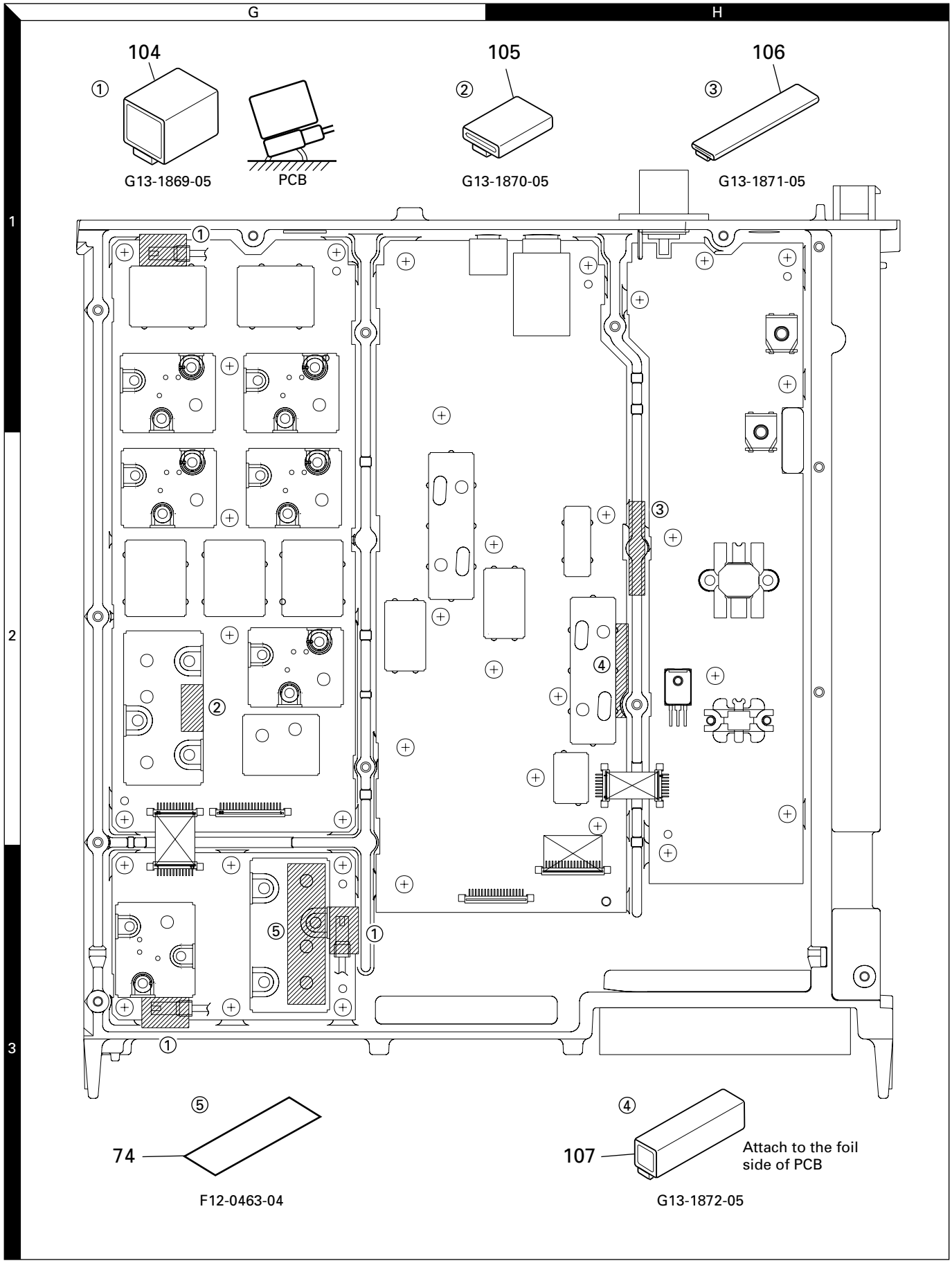

Parts with the exploded numbers larger than 700 are not supplied.

PACKING

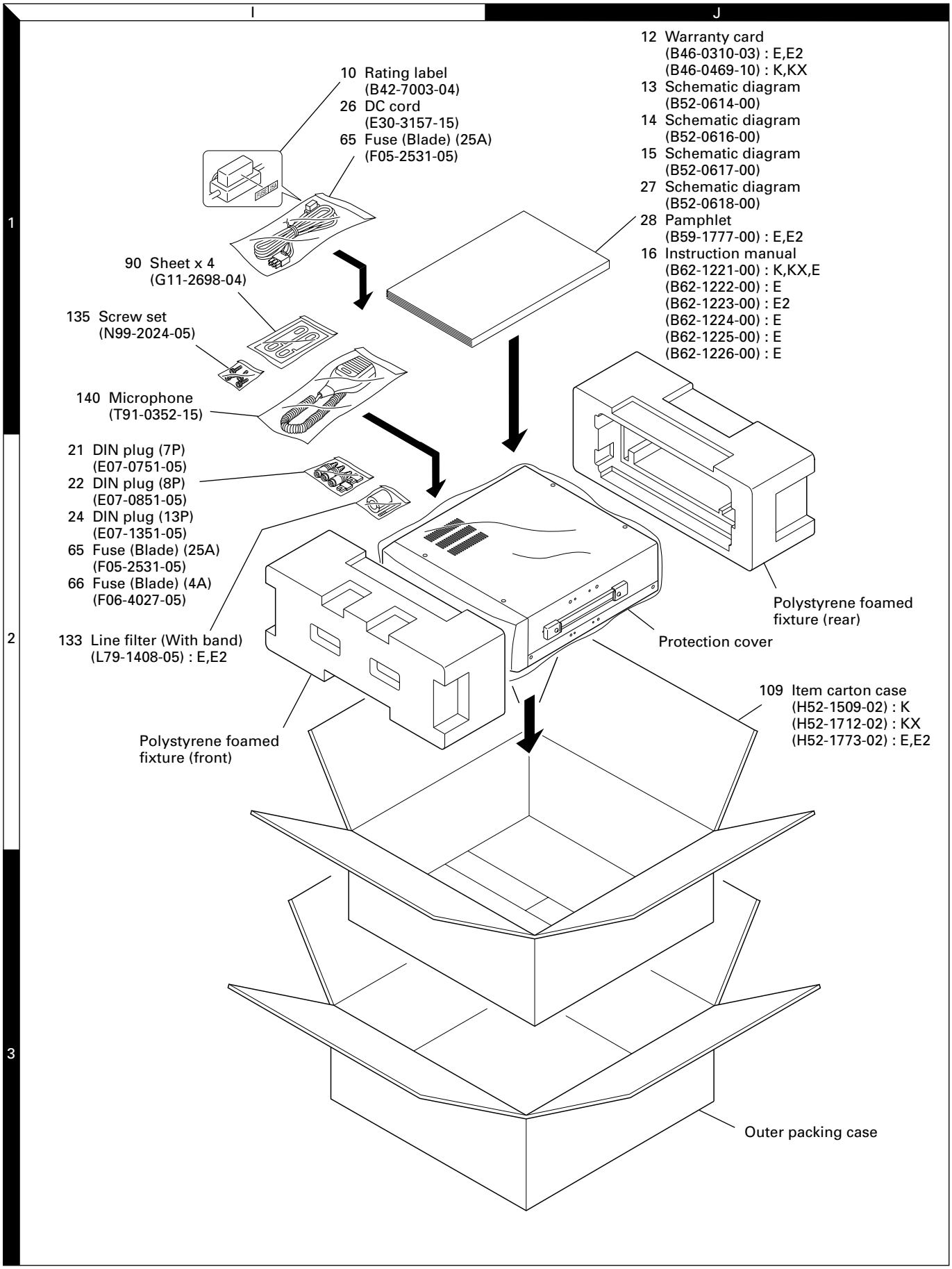

Parts with the exploded numbers larger than 700 are not supplied.

ADJUSTMENT

Required Test Equipment

1. DC Voltmeter (DC V.M)
1) Input resistance : More than 1MΩ
2) Voltage range : 1.5 to 1000V AC/DC
Note : A high-recision multimeter may be used. However, accurate readings can not be obtained for high-impedance circuits.

2. DC Ammeter
1) Current range : 100mA, 1.5A, 15A, high-precision ammeter may be used.

3. RF VTVM (RF V.M)
1) Input impedance : 1MΩ and less than 3pF, min.
2) Voltage range : 10mV to 300V
3) Frequency range : 10kHz to 500MHz

4. AF Voltmeter (AF V.M)
1) Frequency range : 50Hz to 10kHz
2) Input resistance : 1MΩ or greater
3) Voltage range : 10mV to 30V

5. AF Generator (AG)
1) Frequency range : 200Hz to 5kHz
2) Output : 1mV or less to 1V, low distortion

6. AF Dummy Load (DM. SP)
1) Impedance : 8Ω
2) Dissipation : 3W or greater

7. Oscilloscope
Requires high sensitivity, and external synchronization capability (150MHz or greater).

8. Sweep Generator (Sweep G.)
1) Center frequency : 50kHz to 140MHz
2) Frequency deviation : Maximum ±35kHz
3) Output voltage : 100mV or greater

9. Standard Signal Generator (SSG)
1) Frequency range : 50kHz to 60MHz
2) Output : –133dBm/0.1μV to 7dBm/1V
3) Output impedance : 50Ω
4) AM and FM modulation can be possible
Note : Generator must be frequency stable.

10. Frequency Counter (f. counter)
1) Minimum input voltage : 50mV
2) Frequency range : 150MHz or greater

11. Noise Generator (Noise G.)
Must generate ignition noise containing harmonics beyond 30MHz.

12. RF Dummy Load
1) Impedance : 150Ω and 50Ω
2) Dissipation : 150W or greater

13. Linear Detector
1) Frequency range : 60MHz or greater

14. Power Meter
1) Impedance : 50Ω
2) Dissipation : 300W continuous or greater
3) Frequency limits : 60MHz or greater

15. Spectrum Analyzer
1) Frequency range : 100kHz to 140MHz or greater
2) Bandwidth : 1kHz to 3MHz

16. Detector
1) For adjustment of BPF

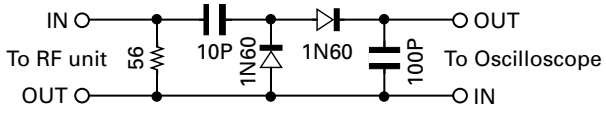

2) For adjustment of PLL/VCO BPF

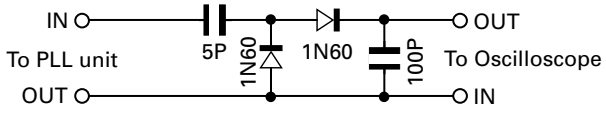

17. Directional Coupler

18. Monitor Receiver
R-1000 class

19. Microphone
MC-43S or MC-60S8

20. Tracking Generator

21. Distortion Meter

22. Double Signal Pad (50Ω)

ADJUSTMENT

Preparation

Unless otherwise specified, knobs and switches should be set as follows.

POWER ..... ON
MANUAL BC ..... Center
MAIN RF GAIN ..... MAX
MAIN AF GAIN ..... MIN
NAIN SQL ..... MIN
SUB AF GAIN ..... MIN
SUB SQL ..... MIN

■ Front panel

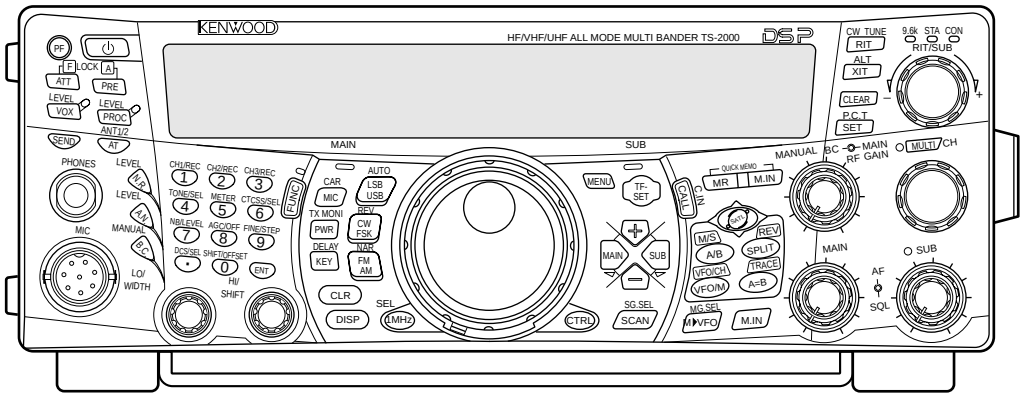

■ Rear panel

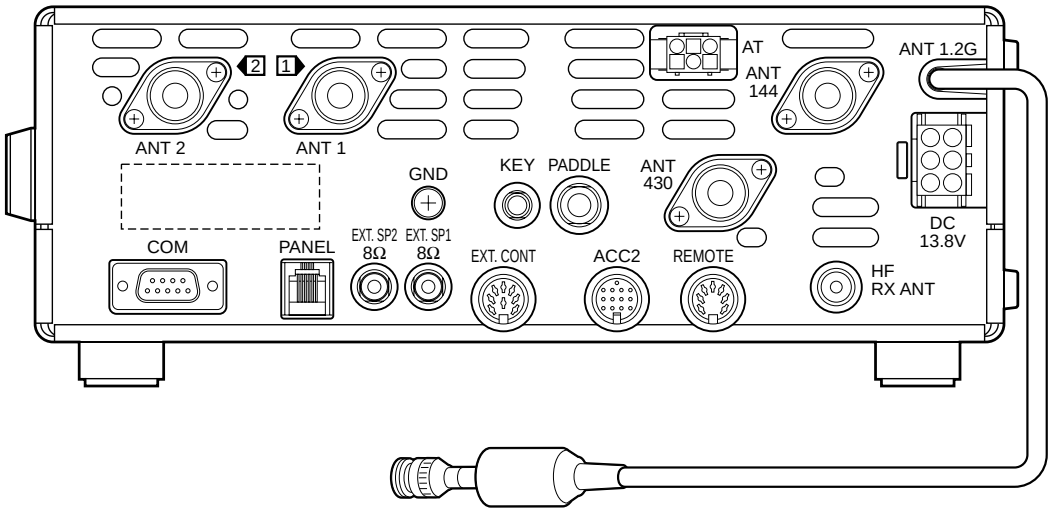

ADJUSTMENT

Service Jig

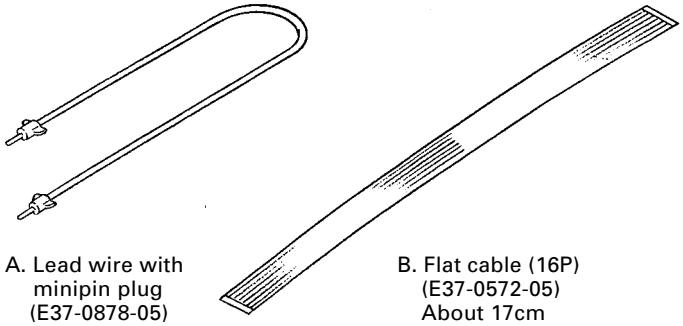

A. Lead wire with minipin plug (E37-0878-05) About 56cm

B. Flat cable (16P) (E37-0572-05) About 17cm

■ How to use

A. Lead wire with minipin plug

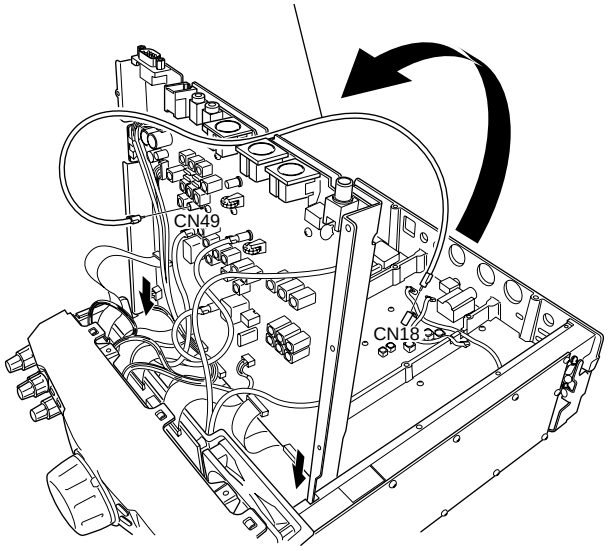

B. Flat cable (16P)

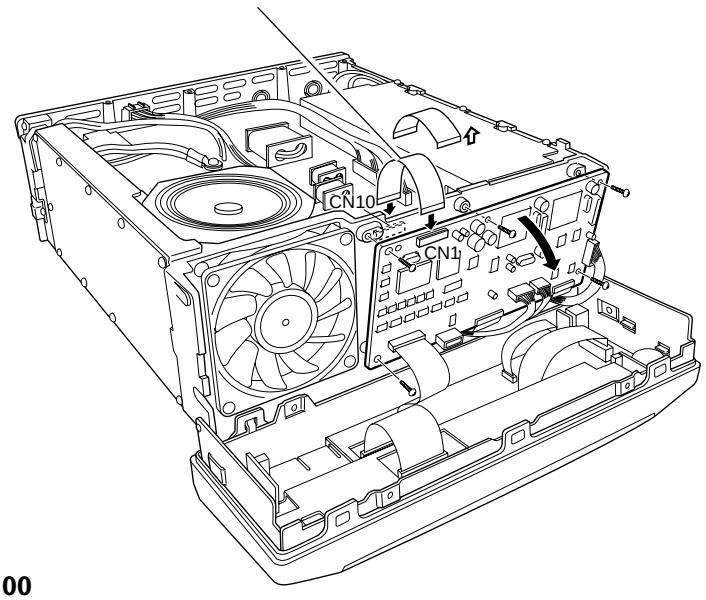

Adjustment Mode

■ Outline

1. The TS-2000/X can be adjusted manually (by turning a coil, trimmer, etc.) or by setting the service adjustment mode (adjustment with panel keys). In the service adjustment mode (simply referred to as the adjustment mode below), adjustments items are shown in menu No.00 to 126 and all data are saved in the EEPROM (X53-391: IC7).
2. To enter adjustment mode, the user firmware in the main unit must be rewritten with adjustment firmware. (The user firmware is factory-set.)

■ Diagram of uploading the adjustment firmware

1. Checksum confirmation
   Switch the transceiver on while pressing and hold [N.R.] and [MIC/CAR] keys.

↓

2. Preparation of uploading the data
   1) Access Menu No. 56 and select 9600 bps, then switch the transceiver OFF.
      Turn the transceiver ON again.
   2) Back up the user data in the transceiver (Menu configuration and Memory channel data)
      Run the programming software (W05-0855-00), then select "Menu/MRch READ from RADIO"
      Name the file that can be identified easily.
      (Such as a serial number)

↓

3. Uploading the adjustment firmware
   1) Turn the switch (S1) ON in TX-RX1 unit (X57-605 A).
   2) Upload the adjustment firmware, using "ADJUST FIRMWARE WRITE" menu.
   3) Turn the switch (S1) OFF in TX-RX1 unit (X57-605 A).
   4) Turn the transceiver ON while pressing [A=B] key to perform the full reset.

Refer to the uploading procedure 1~8.

↓

4. Repair and adjustment

↓

5. Uploading the user firmware
   1) Turn the switch (S1) ON in TX-RX1 unit (X57-605 A).
   2) Upload the user firmware, using "USER FIRMWARE WRITE" menu.
   3) Turn the switch (S1) OFF in TX-RX1 unit (X57-605 A).
   4) Turn the transceiver ON while pressing [A=B] key to perform the full reset.

Refer to the uploading procedure 9.

↓

6. Checksum confirmation
   Switch the transceiver on while pressing and hold [N.R.] and [MIC/CAR] keys.
   If the user firmware has not changed, the checksum is same as the value in step 1.
   If the user firmware has been updated, the checksum should match the new checksum.

Refer to the uploading procedure 10.

↓

7. Uploading the user firmware
   1) Turn the transceiver ON while pressing [A=B] key to perform the full reset.
   2) Run the programming software (W05-0855-00), then select "Menu/MRch WRITE to the RADIO"

ADJUSTMENT

■ Procedure for writing adjustment firmware (for both user and adjustment firmware)

1. Remove the lower case and set the slide switch (S1) of the TX-RX 1 unit (X57-605A) to ON (move the switch toward the front).
2. Connect the RS-232C port of the personal computer with the COM port of the main unit with a D-SUB (9-pin) straight cable (female-female).
3. Connect the external power supply (13.8V) to the main unit and turn the power supply ON. The main unit does not turn on any indicators, but it is ready to rewrite firmware. Do not operate the power switch on the main unit.
4. Write firmware using writing software. (See the help of the software for information on how to write it.)
5. After writing the firmware, turn the external power supply OFF and remove the RS-232C cable.
6. Set the slide switch (S1) of the TX-RX 1 unit (X57-605A) to OFF (move the switch toward the rear).
7. Turn the external power supply ON.
8. Turn the main unit ON and confirm that the indicator lights. Then, perform all reset (hold down [A=B] key and press the [POWER] key) and confirm that the initial state is displayed.
9. After adjustment, rewrite adjustment software back to user firmware using the writing software. (See the help of the software for information on how to write it.)
10. After rewriting user software, check the checksum (hold down the [N.R.] and [MIC/CAR] keys and press the [POWER] key. Menu No.125). Then , perform all reset.

Notes :

1. When adjustment software is loaded and the main unit is turned ON, a beep sounds to indicate the adjustment mode. This does not indicate a failure.
   When any key (except [PF] key) is pressed after a frequency is displayed, the beep stops.
2. Do not return the TS-2000/X that contains adjustment firmware to the user.

■ Adjustment mode operation procedure

1. Start the adjustment mode.
   Hold down the [N.R.] and [MIC/CAR] keys and press the [POWER] key. The adjustment mode is set and a menu number is displayed below the M.CH on the main band side (left) of the display.



2. Select adjustment mode menu No.
   Turn the [MULTI CH] knob to change the menu No.
3. Change adjustment mode setting data.
   Setting data can be changed with [+] or [–] key.
4. Write adjustment mode data.
   Press [+] or [–] key on the main unit or [UP] or [DOWN] key on the microphone on menu No. 124.
5. Cancel adjustment mode.
   Press the [CLR] key to return to the normal VFO mode.

Note:

When the power is turned OFF in the middle in the adjustment mode, it is canceled.

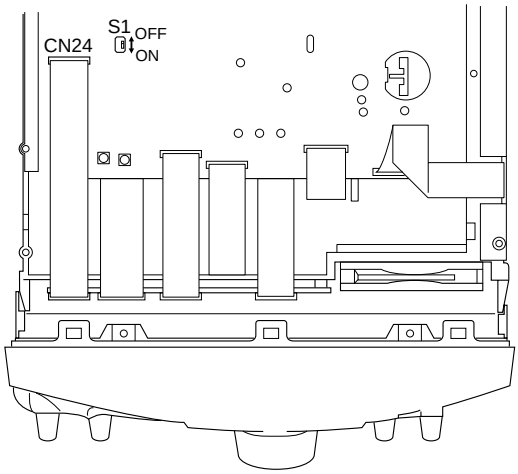

Adjustment Mode Menu (Menu No. 00~126)

No.	Adjustment item	Item	Frequency	Mode
00	ALC reference voltage	14.1M	14.1M	USB
01	146M BPF center voltage (Main)	146M	145.99M	USB
02	Variable capacitor voltage	142M	142.00M	USB
03	Variable capacitor voltage	144M	144.00M	USB
04	Variable capacitor voltage	148M	148.10M	USB
05	Variable capacitor voltage	152M	151.90M	USB
06	435M BPF center voltage (Main)	440M	440.00M	USB
07	Variable capacitor voltage	450M	449.80M	USB
08	Variable capacitor voltage	430M	430.00M	USB
09	Variable capacitor voltage	420M	420.00M	USB
10	146M BPF center voltage (Sub)	146M	146.00M	FM
11	Variable capacitor voltage	118M	118.00M	FM
12	Variable capacitor voltage	132M	132.00M	FM
13	Variable capacitor voltage	160M	160.00M	FM
14	Variable capacitor voltage	174M	173.90M	FM
15	440M BPF center voltage (TX)	435M	435.10M	USB
16	Variable capacitor voltage	420M	420.10M	USB
17	Variable capacitor voltage	440M	439.99M	USB
18	Variable capacitor voltage	450M	449.90M	USB
19	Variable capacitor voltage (HF TX)	14M	14.1M	USB
20	10.695M IF filter window	10.695M	1.83M	USB
21	455k IF filter window	455k	1.83M	USB
22	SSB IF gain	SSB start	14.2M	USB
23	SSB S1	SSB S1	14.2M	USB
24	SSB S9	SSB S9	14.2M	USB
25	SSB S-full scale	SSB S full	14.2M	USB
26	FM S1	FM S1	29.2M	FM
27	FM S-full scale	FM full	29.2M	FM
28	SSB IF gain	SSB start	50.2M	USB
29	SSB S1	SSB S1	50.2M	USB
30	SSB S9	SSB S9	50.2M	USB
31	SSB S-full scale	SSB S full	50.2M	USB
32	FM S1	FM S1	50.2M	FM

ADJUSTMENT

No.	Adjustment item	Item	Frequency	Mode
33	FM S-full scale	FM full	50.2M	FM
34	SSB IF gain	SSB start	144.2M	USB
35	SSB S1	SSB S1	144.2M	USB
36	SSB S9	SSB S9	144.2M	USB
37	SSB S-full scale	SSB S full	144.2M	USB
38	FM S1	FM S1	145.8M	FM
39	FM full scale	FM full	145.8M	FM
40	FM S1 (SUB)	FM S1	145.8M	FM
41	FM full scale (SUB)	FM full	145.8M	FM
42	AM S1	AM S1	120.2M	AM
43	AM S-full scale	AM full	120.2M	AM
44	SSB IF gain	SSB start	438.2M	USB
45	SSB S1	SSB S1	438.2M	USB
46	SSB S9	SSB S9	438.2M	USB
47	SSB S-full scale	SSB S full	438.2M	USB
48	FM S1	FM S1	438.2M	FM
49	FM S-full scale	FM full	438.2M	FM
50	FM S1 (SUB)	FM S1	438.2M	FM
51	FM S-full scale (SUB)	FM full	438.2M	FM
52	SSB IF gain	SSB start	1270.2M	USB
53	SSB S1	SSB S1	1270.2M	USB
54	SSB S9	SSB S9	1270.2M	USB
55	SSB S-full scale	SSB S full	1270.2M	USB
56	FM S1	FM S1	1270.2M	FM
57	FM S-full scale	FM full	1270.2M	FM
58	ALT voltage	Center	1270.2M	FM
59	ALT voltage	Center	145.8M	FM
60	SQ threshold voltage	FM	50.2M	FM
61	SQ threshold voltage	FM	145.8M	FM
62	SQ tight voltage (144M)	FM	145.8M	FM
63	SQ threshold voltage (144M)	FM	145.8M	FM
64	SQ tight voltage (144M)	FM	145.8M	FM
65	SQ threshold voltage (430M)	FM	438.2M	FM
66	SQ threshold voltage (430M)	FM	438.2M	FM
67	SQ threshold voltage (1200MHz)	FM	1270.2M	FM
68	Power (POC)/Power meter	100W/20W	14.1M	USB
69	Power (POC)/Power meter	50W/10W	14.1M	USB
70	Power (POC)/Power meter	25W/5W	14.1M	USB
71	Power (POC)/Power meter	10W/2W	14.1M	USB
72	Power (POC)/Power meter	5W/1W	14.1M	USB
73	TX gain for band	1.8M	1.83M	USB
74	TX gain for band	3.5M	3.51M	USB
75	TX gain for band	7M	7.01M	USB
76	TX gain for band	10M	10.1M	USB
77	TX gain for band	14M	14.1M	USB
78	TX gain for band	18M	18.1M	USB
79	TX gain for band	21M	21.1M	USB
80	TX gain for band	24M	24.9M	USB
81	TX gain for band	28M	28.1M	USB
82	TX gain for band	52M	50.1M	USB
83	HF TX gain for power	50W/10W	14.1M	USB
84	HF TX gain for power	25W/5W	14.1M	USB
85	HF TX gain for power	10W/2W	14.1M	USB
86	HF TX gain for power	5W/1W	14.1M	USB
87	ALC meter start	Start	14.1M	USB
88	ALC meter zone max	Zone max	14.1M	USB
89	FM modulation deviation	Wide dev	29.1M	FM
90	FM modulation deviation	Narrow dev	29.1M	FM
91	Power (POC) / Power meter	100W/20W	145.9M	USB
92	Power (POC) / Power meter	50W/10W	145.9M	USB
93	Power (POC) / Power meter	25W/5W	145.9M	USB
94	Power (POC) / Power meter	10W/2W	145.9M	USB
95	Power (POC) / Power meter	5W/1W	145.9M	USB
96	TX gain for band	146M	145.9M	USB
97	144M TX gain for power	50W/10W	145.9M	USB
98	144M TX gain for power	25W/5W	145.9M	USB
99	144M TX gain for power	10W/2W	145.9M	USB
100	144M TX gain for power	5W/1W	145.9M	USB
101	Power (POC) / Power meter	50W/20W	438.1M	USB
102	Power (POC) / Power meter	25W/10W	438.1M	USB
103	Power (POC) / Power meter	12.5W/5W	438.1M	USB
104	Power (POC) / Power meter	5W/1W	438.1M	USB
105	TX gain for band	440M	438.1M	USB
106	440M TX gain for power	25W/10W	438.1M	USB
107	440M TX gain for power	12.5W/5W	438.1M	USB
108	440M TX gain for power	5W/1W	438.1M	USB
109	Power (POC) / Power meter	10W	1270.1M	USB
110	Power (POC) / Power meter	5W	1270.1M	USB
111	Power (POC) / Power meter	2.5W	1270.1M	USB
112	Power (POC) / Power meter	1W	1270.1M	USB
113	TX gain for 1.2G band	1.2G	1240.1M	USB
114	TX gain for band	1.2G	1270.1M	USB
115	TX gain for 1.2G band	1.2G	1299.9M	USB
116	1.2G TX gain for power	2.5W	1270.1M	USB
117	1.2G TX gain for power	1W	1270.1M	USB
118	SWR protection	HF	14.1M	CW
119	SWR meter (VSWR : 3.0)	14M	14.1M	FM
120	SWR meter (VSWR : 3.0)	52M	50.1M	CW
121	SWR protection	146M	145.9M	CW
122	SWR protection	440M	438.1M	CW
123	SWR protection	1270.1	1270.1M	CW
124	EEPROM write			
125	Checksum			
126	Display check / Activate all the AT relay contacts			

You can confirm the settings of Menu No. 125 and 126 even if you are not in the adjustment mode.

■ Menu No. 125 checksum display

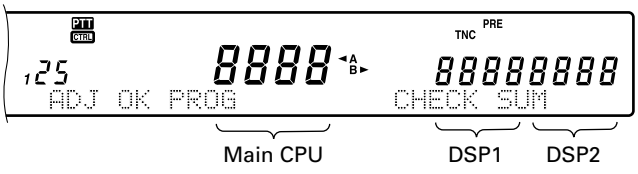

ADJUSTMENT

Display Check

Item	Condition	Measurement			Adjustment			Specifications/Remarks
		Test-equipment	Unit	Terminal	Unit	Parts	Method	
1. All reset	1) DC IN : 13.8V Hold down [A=B] key and press the [POWER]key.				Front panel	LCD	After displaying "HELLO", the display is reset as follows; Main band side DISP f. : 14.000.00 Mode : USB ANT1, PTT, CTRL, AGC, PRE Sub band side DISP f. : 144.000.00 Mode : FM PRE, TNC	Display should be normal. Should be at the reset frequency.
2. LCD all segments light	1) Menu No. : 126						Check	LCD all segments light.

PLL Section

Item	Condition	Measurement			Adjustment			Specifications/Remarks
		Test-equipment	Unit	Terminal	Unit	Parts	Method	
1. 31.2MHz level	1) Display f. : 14.100MHz Mode : USB Receive	Oscilloscope	TX-RX2 (B/11)	W503	TX-RX2 (B/11)	L422 L427	Level max.	–3dBm or more
2. Lock voltage	1) HF REF VCO Display f. : 2.000MHz Mode : FM	DC V.M Spectrum analyzer		TP501	TX-RX2 (D/11)	TC403	1.5V	±0.5V
	Display f. : 12.990MHz						Check	4.6V or less
	2) HF1 MAIN PLL Display f. : 30.00kHz Mode : FM			TP502	TX-RX2 (J/11)	TC408	1.45V	±0.05V
	Display f. : 16.990MHz						Check	6.3V or less
	3) HF2 MAIN PLL Display f. : 17.00MHz Mode : FM				TX-RX2 (J/11)	TC410	1.45V	±0.05V
	Display f. : 36.990MHz						Check	6.3V or less
	4) HF3 MAIN PLL Displat f. : 37.00MHz Mode : FM				TX-RX2 (J/11)	TC409	1.45V	±0.05V
	Display f. : 60.000MHz						Check	6.3V or less
	5) HF LO2 PLL Display f. : 24.00MHz Mode : FM		TX-RX2 (C/11)	TP505	TX-RX2 (I/11)	TC402	1.5V	±0.05V
	Display f. : 29.000MHz						Check	4.6V or less
	6) VHF REF PLL Display f. : 142.00MHz Mode : FM		TX-RX2 (B/11)	TP512	TX-RX2 (E/11)	TC406	2.0V	±0.5V
	Display f. : 151.990MHz						Check	4.6V or less

ADJUSTMENT

Item	Condition	Measurement			Adjustment			Specifications/Remarks
		Test-equipment	Unit	Terminal	Unit	Parts	Method	
	7) VHF MAIN PLL Display f. : 142.00MHz Mode : FM	DC V.M Spectrum analyzer	TX-RX2 (B/11)	TP503	TX-RX2 (H/11)	TC405	1.0V	±0.03V
	Display f. : 152.000MHz						Check	4.6V or less
	8) UHF PLL Display f. : 449.990MHz Mode : FM			TP504	TX-RX2 (G/11)	TC404	6.0V	±0.05V
	Display f. : 420.000MHz						Check	1.5V or more
	9) SUB1 PLL Display f. : 154.495MHz Mode : FM		TX-RX2 (C/11)	TP506	TX-RX2 (K/11)	TC400	5.5V	±0.2V
	Display f. : 220.000MHz						Check	1.0V or less
	10) SUB2 PLL Display f. : 173.995MHz Mode : FM				TX-RX2 (K/11)	TC401	5.5V	±0.5V
	Display f. : 135.000MHz						Check	1.0V or less

Receiver Section

Item	Condition	Measurement			Adjustment			Specifications/Remarks
		Test-equipment	Unit	Terminal	Unit	Parts	Method	
1. HF BPF	1) Display f. : 7.200MHz Mode : AM Spectrum analyzer setting Center f. : 7.000MHz Frequency span : 5MHz XdB/DIV : 10dB RBW : 30kHz VBW : 30kHz	Tracking generator Spectrum analyzer	Rear panel TX-RX1 (A/9)	ANT1 CN5	TX-RX1 (A/9)	L23 L24 L25	Adjust the coils to obtain the frequency response as shown.	
	2) Display f. : 14.200MHz Spectrum analyzer setting Center f. : 14.000MHz					L32 L33 L34		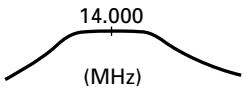
	3) Display f. : 50.000MHz Spectrum analyzer setting Center f. : 54.000MHz					L45 L46		
						L44	Adjust the coil to get a null point at 68.985MHz as shown.	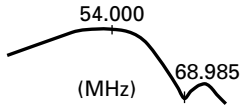
2. RX trap (E type only)	1) Display f. : 11.700MHz Mode : AM PRE-AMP : ON					TC1	Adjust the trimmer to get a null point at 11.7MHz.	
	2) Display f. : 15.501MHz					TC2	Adjust the trimmer to get a null point at 15.501MHz.	

ADJUSTMENT

Item	Condition	Measurement			Adjustment			Specifications/Remarks
		Test-equipment	Unit	Terminal	Unit	Parts	Method	
3. MCF (69.085MHz)	1) Display f. : 14.000MHz Mode : USB PRE-AMP : ON AGC : OFF Spectrum analyzer setting Center f. : 69.085MHz Frequency span : 100kHz XdB/DIV : 10dB RBW : 30kHz VBW : 30kHz	Tracking generator Spectrum analyzer	Rear panel TX-RX1 (A/9)	ANT1 TP4 (CN6) TP5 (CN9)	TX-RX1 (A/9)	L54 L62 L63 L64 L68	Adjust the coils to obtain the frequency response as shown.	
4. MCF (72.925MHz)	1) Display f. : 18.000MHz Spectrum analyzer setting Center f. : 72.925MHz					L65 L66 L67		
• Perform the following in the adjustment mode. Item 5, 6, 10~12, 16, 17 and 21~38. To terminate the adjustment menu in the middle, save your settings with Menu No. 124.								
5. MAIN VHF BPF	1) Sub band f. : 144.000MHz Mode : USB PRE-AMP : ON AGC : ON Spectrum analyzer setting Center f. : 146.000MHz Frequency span : 50MHz XdB/DIV : 5dB RBW : 100kHz VBW : 30kHz	Tracking generator Spectrum analyzer	Rear panel TX-RX2 (A/11)	ANT144 CN19	TX-RX2 (A/11)	L163 L164	Adjust the coils to obtain the frequency response as shown.	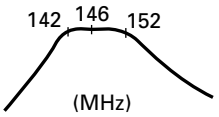
	2) Menu No. : 01 Display f. : 146MHz			CN15	Front panel TX-RX2 (A/11)	[+] key or [–] key L23 L34 L47 L55	After setting the adjustment value to 160, adjust each coil to obtain the frequency response as shown.	
	3) Menu No. : 02 Display f. : 142MHz				Front panel	[+] key or [–] key	Change the adjustment values to get the highest peak points as shown.	
	4) Menu No. : 03 Display f. : 144MHz							
	5) Menu No. : 04 Display f. : 148MHz							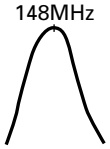
	6) Menu No. : 05 Display f. : 152MHz							

ADJUSTMENT

Item	Condition	Measurement			Adjustment			Specifications/Remarks
		Test-equipment	Unit	Terminal	Unit	Parts	Method	
6. MAIN UHF BPF	1) Trap default	Tracking generator Spectrum analyzer	Rear panel TX-RX2 (A/11)	ANT430 CN19	TX-RX2 (A/11)	TC9	Adjust the trimmer to get a null point at 366MHz as shown.	
	2) Menu No. : 06 Display f. : 440MHz Spectrum analyzer setting Center f. : 440.000MHz Frequency span : 100MHz XdB/DIV : 5dB RBW : 100kHz VBW : 30kHz				Front panel TX-RX2 (A/11)	[+] key or [–] key TC1 TC2 TC3	After setting the adjustment value to 145, adjust each trimmer to obtain the frequency response as shown.	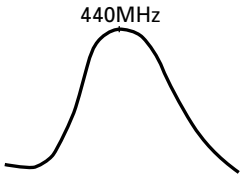
	3) Menu No. : 07 Display f. : 449.8MHz				Front panel	[+] key or [–] key	Change the adjustment values to get the highest peak points as shown.	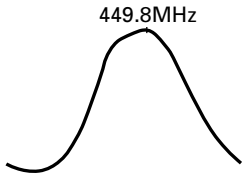
	4) Menu No. : 08 Display f. : 430MHz							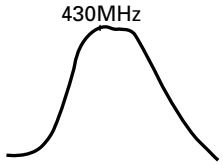
	5) Menu No. : 09 Display f. : 420MHz							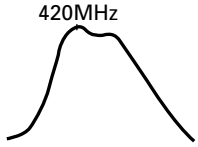
7. HF RX IF gain	1) Display f. : 14.201MHz Mode : USB PRE-AMP : OFF AF output : 0.63V/8Ω SSG f. : 14.201MHz SSG output : –113dBm/0.501µV	SSG Oscilloscope AF V.M DM. SP	Rear panel	ANT1 EXT. SP	TX-RX1 (A/9)	L69 L71 L613 L614 L87	AF output max.	
8. 1st mixer balance	1) Display f. : 100kHz Mode : USB PRE-AMP : OFF SSG output : OFF					VR1	Noise min.	
9. Gain balance	1) Display f. : 9.000MHz Mode : USB SSG f. : 9.001MHz SSG output : –116dBm/0.35µV					VR4	Set the AF output voltage to 0.63V at 8,999.99kHz. Then adjust VR4 to obtain the voltage 0.63V at 9.000MHz when the transceiver is in the receive mode. (If you would not get the specified voltage, adjust 3. MCF and 4. MCF again.)	

ADJUSTMENT

Item	Condition	Measurement			Adjustment			Specifications/Remarks
		Test-equipment	Unit	Terminal	Unit	Parts	Method	
10. 10.695MHz IF filter	1) Menu No. : 20 SSG1 f. : 1.8330MHz SSG1 output : –33dBm/5010µV SSG2 f. : 1.8301MHz SSG2 output : –33dBm/5010µV Disconnect the cable from CN23. 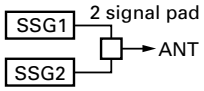 	SSG1 SSG2 2 signal pad Oscilloscope	Rear pnel TX-RX1 (A/9)	ANT2 TP1	Front panel	[+] key or [–] key	Change the adjustment values to get the waveform as shown.	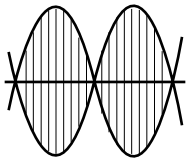
11. 455kHz IF filter	1) Menu No. : 21 Connect the cable to CN23.			TP2				
12. SSB IF gain (AGC start level)	1) Menu No. : 22 Display f. : 14.201MHz Mode : USB SSG output : –110dBm/0.707µV	SSG		ANT1			Change the adjustment values within the range of 1 to 5 on the display.	
	2) Menu No. : 28 Display f. : 50.201MHz SSG outut : –114dBm/0.446µV							
13. NB gain	1) Display f. : 14.200MHz Mode : USB PRE-AMP : ON SSG f. : 14.200MHz SSG output : –103dBm/1.58µV AGC : ON NB : ON	DC V.M SSG AF V.M Oscilloscope DM. SP Noise G.	TX-RX1 (A/9) Rear panel	TPNB ANT1 EXT. SP	TX-RX1 (A/9)	L81 L82	Voltage min.	
	2) NB : OFF→ON						Adjust output of noise generator to S1 and S9, and check each.	Noise should disappear when NB is on.
14. FM discriminator coil (HF)	1) Display f. : 29.2MHz Mode : FM AF output : 0.63V/8Ω SSG f. : 29.2MHz SSG output : –53dBm/501µV MOD : 1kHz DEV : 3kHz				TX-RX1 (A/9)	L83	AF distortion min.	3% or less
15. RX IF gain (VHF)	1) Display f. : 145.991MHz Mode : USB AF output : 0.63V/8Ω SSG f. :145.991MHz SSG output : –120dBm/0.22µV	SSG Oscilloscope AF V.M DM. SP	Rear panel	ANT144 EXT. SP	TX-RX2 (A/11)	L80 L82 L86	AF output max.	
16. SSB IF gain (AGC start level)	1) Menu No. : 34 Display f. : 144.201MHz Mode : USB SSG output : –116dBm/0.35µV				Front panel	[+] key or [–] key	Change the adjustment values within the range of 1 to 5 on the display.	
	2) Menu No. : 44 Display f. : 438.20MHz SSG output : –116dBm/0.35µV			ANT430				

ADJUSTMENT

Item	Condition	Measurement			Adjustment			Specifications/Remarks
		Test-equipment	Unit	Terminal	Unit	Parts	Method	
17. Sub band BPF	1) Menu No. : 10 Display f. : 146MHz Mode : FM SSG output : –110dBm/0.707µV MOD : 1kHz DEV : 3kHz	SSG Oscilloscope AF V.M DM. SP	Rear panel TX-RX2 (A/11)	ANT144 EXT. SP SSM	TX-RX2 (A/11)	L28 L44 L52	After setting the adjustment value to 90, adjust each coil to obtain the specified values.	S-meter voltage max.
	2) Menu No. : 11 Display f. : 118MHz Mode : FM MOD : 1kHz DEV : 3kHz				Front panel	[+] key or [–] key	Change the adjustment values to have the highest readings of S-meter voltage.	(1.04V)
	3) Menu No. : 12 Display f. : 132MHz Mode : FM MOD : 1kHz DEV : 3kHz							(1.13V)
	4) Menu No. : 13 Display f. : 160MHz Mode : FM MOD : 1kHz DEV : 3kHz							(1.17V)
	5) Menu No. : 14 Display f. : 174MHz Mode : FM MOD : 1kHz DEV : 3kHz							(1.11V)
18. FM discriminator coil (VHF) Sub band	1) Display f. : 145.800MHz Mode : FM AF output : 0.63V/8Ω SSG f. : 145.800MHz SSG output : –53dBm/501µV MOD : 3kHz	DC V.M SSG AF V.M Oscilloscope DM. SP	TX-RX2 (A/11) Rear panel	CN1 ANT144 EXT. SP	TX-RX2 (A/11)	L93	AF output max.	
							Check the AF distortion	3% or less
19. Trap frequency (UHF)	1) SSG1 f. : 439.8MHz Mode : FM SSG1 output : –108dBm/0.9µV MOD : 1kHz DEV : 3kHz SSG2 f. : 356.01MHz Mode : FM SSG2 output : –30dBm/7070µV MOD : 400Hz DEV : 3kHz			ANT430	TX-RX (A/11)	TC9	SINAD max.	
20. S/N check (Reference)	1) Display f. : Next page AF output : 0.63V/8Ω AGC : FAST SSG f. : Next page However, USB : +1kHz PRE-AMP : ON ATT : OFF	SSG AF V.M Oscilloscope Distortion meter DM. SP	Rear panel	ANT EXT. SP				

ADJUSTMENT

Item	Condition	Measurement			Adjustment			Specifications/Remarks
		Test-equipment	Unit	Terminal	Unit	Parts	Method	

Band	Frequency (K)	Frequency (E)	Mode	SSG RF level (dBm)	SSG MOD	DEV	Measurement	Spec.
MAIN	550kHz	550KHz	AM	–85	1kHz	60%→OFF	S/N	>10dB
MAIN	14.200MHz	14.200MHz	USB	–119→OFF	OFF	OFF	S/N	>10dB
MAIN	18.200MHz	18.200MHz	USB	–119→OFF	OFF	OFF	S/N	>10dB
MAIN	52.200MHz	52.200MHz	FM	–118	1kHz	3kHz	SINAD	>12dB
MAIN	146.200MHz	145.200MHz	AM	–106	1kHz	60%→OFF	S/N	>10dB
MAIN	146.200MHz	145.200MHz	FM	–121	1kHz	3kHz	SINAD	>12dB
SUB	118.200MHz	–	AM	–85	1kHz	60%→OFF	S/N	>10dB
SUB	146.200MHz	145.200MHz	FM	–117	1kHz	3kHz	SINAD	>12dB
MAIN	440.200MHz	435.200MHz	FM	–122	1kHz	3kHz	SINAD	>12dB
MAIN	430.200MHz	430.200MHz	FM	–121	1kHz	3kHz	SINAD	>12dB
MAIN	449.200MHz	439.200MHz	FM	–121	1kHz	3kHz	SINAD	>12dB
SUB	444.200MHz	430.200MHz	FM	–117	1kHz	3kHz	SINAD	>12dB
SUB	438.200MHz	435.200MHz	FM	–117	1kHz	3kHz	SINAD	>12dB
SUB	449.200MHz	439.200MHz	FM	–117	1kHz	3kHz	SINAD	>12dB

21. SSB S-meter S1 (HF)	1) Menu No. : 23 Display f. : 14.201MHz Mode : USB AGC : ON PRE-AMP : ON SQL : Counterclockwise max. (Level min.) RF GAIN : Clockwise max. SSG f. : 14.201MHz SSG output : –107dBm/1µV	SSG AF V.M Oscilloscope DM. SP	Rear panel	ANT1 EXT. SP	Front panel	[+] key or [–] key	1 push	S-meter lights up to S1 level.
S9	2) Menu No. : 24 SSG output : –81dBm/19.9µV							S-meter lights up to S9 level.
Full scale (Lights up all)	3) Menu No. : 25 SSG output : –21dBm/19900µV							S-meter lights up all.
22. FM S-meter S1 (HF)	1) Menu No. : 26 Display f. : 29.2MHz Mode : FM SSG f. : 29.2MHz SSG output : –117dBm/0.316µV MOD : 1kHz DEV : 3kHz							S-meter lights up to S1 level.
Full scale (Lights up all)	2) Menu No. : 27 SSG output : –95dBm/3.98µV							S-meter lights up all.
23. 50MHz SSB S-meter S1	1) Menu No. : 29 Display f. : 50.2MHz Mode : USB SSG output : –111dBm/0.63µV							S-meter lights up to S1 level.
S9	2) Menu No. : 30 SSG output : –85dBm/12.6µV							S-meter lights up to S9 level.
Full scale (Lights up all)	3) Menu No. : 31 SSG output : –25dBm/12600µV							S-meter lights up all.

ADJUSTMENT

Item	Condition	Measurement			Adjustment			Specifications/Remarks
		Test-equipment	Unit	Terminal	Unit	Parts	Method	
24. 50MHz FM S-meter S1	1) Menu No. : 32 Display f. : 50.2MHz Mode : FM SSG output : –117dBm/0.316µV MOD : 1kHz DEV : 3kHz	SSG AF V.M Oscilloscope DM. SP	Rear panel	ANT1 EXT. SP	Front panel	[+] key or [–] key	1 push	S-meter lights up to S1 level.
Full scale (Lights up all)	2) Menu No. : 33 SSG output : –95dBm/3.98µV							S-meter lights up all.
25. 144MHz SSB S-meter S1	1) Menu No. : 35 Display f. : 144.2MHz Mode : USB SSG output : –113dBm/0.501µV			ANT144				S-meter lights up to S1 level.
S9	2) Menu No. : 36 SSG output : –93dBm/5.01µV							S-meter lights up to S9 level.
Full scale (Lights up all)	3) Menu No. : 37 SSG output : –43dBm/1580µV							S-meter lights up all.
26. 144MHz FM S-meter S1	1) Menu No. : 38 Display f. : 145.8MHz Mode : FM SSG output : –117dBm/0.316µV MOD : 1kHz DEV : 3kHz							S-meter lights up to S1 level.
Full scale (Lights up all)	2) Menu No. : 39 SSG output : –95dBm/3.98µV							S-meter lights up all.
27. 120MHz SUB AM S-mete S1	1) Menu No. : 42 Display f. : 120.2MHz Mode : AM SSG output : –105dBm/1.26µV MOD : 1kHz DEV : 60%							S-meter lights up to S1 level.
Full scale (Lights up all)	2) Menu No. : 43 SSG output : –85dBm/12.6µV							S-meter lights up all.
28. 144MHz SUB FM S-mete S1	1) Menu No. : 40 Display f. : 145.8MHz Mode : FM SSG output : –117dBm/0.316µV MOD : 1kHz DEV : 3kHz							S-meter lights up to S1 level.
Full scale (Lights up all)	2) Menu No. : 41 SSG output : –95dBm/3.98µV							S-meter lights up all.
29. 440MHz SSB S-meter S1	1) Menu No. : 45 Display f. : 438.2MHz Mode : USB SSG output : –113dBm/0.501µV			ANT430				S-meter lights up to S1 level.
S9	2) Menu No. : 46 SSG output : –93dBm/5.01µV							S-meter lights up to S9 level.
Full scale (Lights up all)	3) Menu No. : 47 SSG output : –43dBm/1580µV							S-meter lights up all.

ADJUSTMENT

Item	Condition	Measurement			Adjustment			Specifications/Remarks
		Test-equipment	Unit	Terminal	Unit	Parts	Method	
30. 440MHz FM S-meter S1	1) Menu No. : 48 Display f. : 438.2MHz Mode : FM SSG output : –117dBm/0.316µV MOD : 1kHz DEV : 3kHz	SSG AF V.M Oscilloscope DM. SP	Rear panel	ANT430 EXT. SP	Front panel	[+] key or [–] key	1 push	S-meter lights up to S1 level.
Full scale (Lights up all)	2) Menu No. : 49 SSG output : –95dBm/3.98µV							S-meter lights up all.
31. 440MHz SUB FM S-mete S1	1) Menu No. : 50 Display f. : 438.2MHz Mode : FM SSG output : –117dBm/0.316µV MOD : 1kHz DEV : 3kHz							S-meter lights up to S1 level.
Full scale (Lights up all)	2) Menu No. : 51 SSG output : –95dBm/3.98µV							S-meter lights up all.
32. 144MHz FM SQL threshold	1) Menu No. : 61 Display f. : 145.8MHz Mode : FM SSG output : OFF MOD : 1kHz DEV : 3kHz			ANT144				
33. 144MHz FM SQL tight	1) Menu No. : 62 Display f. : 145.8MHz Mode : FM SSG output : –113dBm/0.501µV MOD : 1kHz DEV : 3kHz							
34. 144MHz sub band FM SQL threshold	1) Menu No. : 63 Display f. : 145.8MHz Mode : FM SSG output : OFF MOD : 1kHz DEV : 3kHz							
35. 144MHz sub band FM SQL tight	1) Menu No. : 64 Display f. : 145.8MHz Mode : FM SSG output : –113dBm/0.501µV MOD : 1kHz DEV : 3kHz							
36. 50MHz FM SQL threshold	1) Menu No. : 60 Display f. : 50.2MHz Mode : FM SSG output : OFF MOD : 1kHz DEV : 3kHz			ANT1				
37. 430MHz FM SQL threshold	1) Menu No. : 66 Display f. : 438.2MHz Mode : FM SSG output : OFF MOD : 1kHz DEV : 3kHz			ANT430				

ADJUSTMENT

Item	Condition	Measurement			Adjustment			Specifications/Remarks
		Test-equipment	Unit	Terminal	Unit	Parts	Method	
38. 430MHz sub band FM SQL threshold	1) Menu No. : 65 Display f. : 438.2MHz Mode : FM SSG output : OFF MOD : 1kHz DEV : 3kHz	SSG AF V.M Oscilloscope DM. SP	Rear panel	ANT430 EXT. SP	Front panel	[+] key or [–] key	1 push	
• Writing data : After items 5, 6, 10~12, 16, 17 and 21~38 have been adjusted; 1) Menu No. 124 2) [+] or [–] key : Push once time. Display "rEAdy" → "good" (If "nG" is displayed, enter data again.) 3) [CLR] key : Push once time.								

Transmitter Section

Item	Condition	Measurement			Adjustment			Specifications/Remarks
		Test-equipment	Unit	Terminal	Unit	Parts	Method	
1. Final idling current (HF/VHF)	1) Display f. : 14.100MHz Mode : USB Final unit (A/2) VR1, 2 : MIN Transmit	DC. A	Rear panel	DC	Final (A/2)		Check the default current (Io).	
						VR1	Io + 700mA = I_A	±20mA
						VR2	I_A + 500mA	
	2) Display f. : 145.900MHz Mode : USB VR102 : MIN Transmit					VR102	Io + 1000mA	
2. 29.1MHz frequency	1) Display f. : 29.100MHz Mode : FM Transmit	f. counter	TX-RX1 (A/9)	CN14	TX-RX1 (A/9)	TC3	29.10000MHz	±10Hz
3. Final idling current (UHF)	1) Display f. : 430MHz Mode : USB Final unit (B/2) VR901, 902 : MIN Transmit	DC. A	Rear panel	DC	Final (B/2)		Check the default current (Io).	
						VR901	Io + 300mA = Ic	±20mA
						VR902	Ic + 300mA	
4. TX BPF (VHF)	1) Display f. : 144.9MHz Mode : CW Disconnect the cable from CN4 and insert a cable from the spectrum analyzer. Transmit After the adjustment, connect the cable to CN4.	Spectrum analyzer	TX-RX2 (A/11)	CN4	TX-RX2 (A/11)	TC12 TC13	IF output max.	
						TC14	229MHz spurious level min.	
• Perform the following in the adjustment mode. Item 5~8 and 12~28. To terminate the adjustment menu in the middle, save your settings with Menu No. 124.								

ADJUSTMENT

Item	Condition	Measurement			Adjustment			Specifications/Remarks
		Test-equipment	Unit	Terminal	Unit	Parts	Method	
5. TX BPF (UHF)	1) Menu No. : 15 Display f. : 435.1MHz Mode : USB Disconnect the cable from CN3 and insert a cable from the spectrum analyzer. Transmit .	Spectrum analyzer	TX-RX2 (A/11)	CN3	Front panel TX-RX2 (A/11)	[+] key or [–] key L90 L91 TC4 TC5 TC6 TC8 TC10	After setting the adjustment value to 131, adjust the trimmers and coils to have a maximum IF output.	8dBm or more
	2) Menu No. : 16 Display f. : 420.1MHz				Front panel	[+] key or [–] key	Output gain max.	
(K type only)	3) Menu No. : 17 Display f. : 439.99MHz							
	4) Menu No. : 18 Display f. : 449.9MHz After the adjustment, connect the cable to CN3.							
6. ALC reference voltage	1) Menu No. : 00 Display f. : 14.1MHz Mode : USB Transmit	DC V.M	TX-RX1 (A/9)	TP3	Front panel	[+] key or [–] key	Set the adjustment value within the limit of the specified voltage.	2.7V±0.05V
7. TX IF gain (HF)	1) Menu No. : 78 Display f. : 18.1MHz Mode : USB Transmit	50Ω dummy Oscilloscope Spectrum analyzer		CN14	TX-RX1 (A/9)	L109 L108 L105 L103 L102 L100 L99 L98 L96	Drive output level max.	–4dBm or more
8. TX IF BPF (HF)	1) Menu No. : 19 Display f. : 14.1MHz Mode : USB Transmit				Front panel TX-RX1 (A/9)	[+] key or [–] key L100 L99 L98 L96 L102 VR3	Change the adjustment values to get the peak reading to a maximum output.	3dBm or more
9. TX mixer balance	1) Display f. : 50.1MHz Mode : CW Transmit				TX-RX1 (A/9)	VR2	68.985MHz spurious level min.	
10. Maximum power UHF	1) Display f. : 438.110MHz Mode : CW Transmit	Power meter	Rear panel	ANT430	Final (B/2)	TC901	Power output max.	63W or more
VHF	2) Display f. : 145.9MHz Mode : CW Transmit			ANT144	Final (A/2)	TC101 TC102		100W or more
11. Null	1) Display f. : 14.1MHz Mode : CW Transmit	Power meter DC V.M Oscilloscope	Rear panel Final (A/2)	ANT1 CN11	Filter	TC1	VSR voltage min.	0.3V or less

ADJUSTMENT

Item	Condition	Measurement			Adjustment			Specifications/Remarks
		Test-equipment	Unit	Terminal	Unit	Parts	Method	
12. Power frequency characteristic (HF)	1) Menu No. : 68 Display f. : 14.1MHz Mode : USB Transmit	Power meter DC V.M Oscilloscope	Rear panel Final (A/2)	ANT1 CN11	Filter	VR1	Set it at the center position.	
					Front panel	[+] key or [–] key	Set the adjustment value within the limit of the specified power.	100W±3W
	2) Menu No. : 120 Display f. : 51.99MHz Transmit				Filter	VR1	100W	±3W
	3) Menu No. : 68 Display f. : 14.1MHz Transmit						Check	100W±5W
13. HF power POC (100W/20W)	1) Menu No. : 68 Display f. : 14.1MHz Mode : USB SQL : MIN RF GAIN : MAX Transmit	Power meter	Rear panel	ANT1	Front panel	[+] key or [–] key	Set the adjustment value within the limit of the specified power.	100W ±3W
(50W/10W)	2) Menu No. : 69 Transmit							50W±2W
(25W/5W)	3) Menu No. : 70 Transmit							25W±1W
(10W/2W)	4) Menu No. : 71 Transmit							10W±0.5W
(5W/1W)	5) Menu No. : 72 Transmit							5W±0.3W
14. Band TGC 1.8MHz	1) Menu No. : 73 Display f. : 1.83MHz Mode : USB Transmit							100W±3W
3.5MHz	2) Menu No. : 74 Display f. : 3.51MHz Transmit							
7.0MHz	3) Menu No. : 75 Display f. : 7.01MHz Transmit							
10MHz	4) Menu No. : 76 Display f. : 10.1MHz Transmit							
14MHz	5) Menu No. : 77 Display f. : 14.1MHz Transmit							
18MHz	6) Menu No. : 78 Display f. : 18.1MHz Transmit							
21MHz	7) Menu No. : 79 Display f. : 21.1MHz Transmit							

ADJUSTMENT

Item	Condition	Measurement			Adjustment			Specifications/Remarks
		Test-equipment	Unit	Terminal	Unit	Parts	Method	
24MHz	8) Menu No. : 80 Display f. : 24.9MHz Transmit	Power meter	Rear panel	ANT1	Front panel	[+] key or [–] key	Set the adjustment value within the limit of the specified power.	100W±3W
28MHz	9) Menu No. : 81 Display f. : 28.1MHz Transmit							
52MHz	10) Menu No. : 82 Display f. : 50.1MHz Transmit							
15. Power PGC 50W/10W	1) Menu No. : 83 Display f. : 14.1MHz Mode : USB Transmit							50W±2W
25W/5W	2) Menu No. : 84 Transmit							25W±1W
10W/2W	3) Menu No. : 85 Transmit							10W±0.5W
5W/1W	4) Menu No. : 86 Transmit							5W±0.3W
16. VHF power POC 100W/20W	1) Menu No. : 91 Display f. :145.9MHz Mode : USB Transmit			ANT144				100W±3W
50W/10W	2) Menu No. : 92 Transmit							50W±2W
25W/5W	3) Menu No. : 93 Transmit							25W±1W
10W/2W	4) Menu No. : 94 Transmit							10W±0.5W
5W/1W	5) Menu No. : 95 Transmit							5W±0.3W
17. VHF band TGC	1) Menu No. : 96 Display f. : 145.9MHz Mode : USB Transmit							100W±3W
18. VHF power PGC 50W/10W	1) Menu No. : 97 Display f. : 145.9MHz Mode : USB Transmit							50W±2W
25W/5W	2) Menu No. : 98 Transmit							25W±1W
10W/2W	3) Menu No. : 99 Transmit							10W±0.5W
5W/1W	4) Menu No. : 100 Transmit							5W±0.3W

ADJUSTMENT

Item	Condition	Measurement			Adjustment			Specifications/Remarks
		Test-equipment	Unit	Terminal	Unit	Parts	Method	
19. UHF power POC 50W/20W	1) Menu No. : 101 Display f. : 438.1MHz Mode : USB Transmit	Power meter	Rear panel	ANT430	Front panel	[+] key or [–] key	Set the adjustment value within the limit of the specified power.	50W±2W
25W/10W	2) Menu No. : 102 Transmit							25W±1W
12.5W/5W	3) Menu No. : 103 Transmit							12.5W±0.5W
5W/1W	4) Menu No. : 104 Transmit							5W±0.3W
20. UHF band TGC	1) Menu No. : 105 Display f. : 438.1MHz Mode : USB Transmit							50W±2W
21. UHF power PGC 25W/10W	1) Menu No. : 106 Display f. : 438.1MHz Mode : USB Transmit							25W±2W
12.5W/5W	2) Menu No. : 107 Transmit							12.5W±0.5W
5W/1W	3) Menu No. : 108 Transmit							5W±0.3W
22. ALC meter start point	1) Menu No. : 87 Display f. : 14.1MHz Mode : USB Transmit			ANT1		[+] key	1 push	(ALC meter lights up to 1)
Zone max.	2) Menu No. : 88 Transmit							(ALC meter zone max.)
23. FM DEV Wide	1) Menu No. : 89 Display f. : 29.1MHz Mode : FM Transmit							4.3kHz±0.05kHz
Narrow	2) Menu No. : 90 Transmit							2.2kHz±0.05kHz
24. HF SWR protection	1) Menu No. : 118 Display f. : 14.1MHz Mode : CW Transmit 150Ω dummy connection : Use a cable that is 1m long	Through type power meter 150Ω dummy	Rear panel	ANT2		[+] key or [–] key	Set the adjustment value within the limit of the specified power.	40W±1W
25. SWR meter (SWR : 3)	1) Menu No. : 119 Display f. : 14.1MHz Mode : FM Transmit 150Ω dummy connection : Use a cable that is approx. 10cm long					[+] key	1 push	
26. 50MHz SWR meter (SWR : 3)	1) Menu No. : 120 Display f. : 50.1MHz Mode : CW Transmit							

ADJUSTMENT

Item	Condition	Measurement			Adjustment			Specifications/Remarks
		Test-equipment	Unit	Terminal	Unit	Parts	Method	
27. VHF SWR protection	1) Menu No. : 121 Display f. : 145.9MHz Mode : CW ANT : Short Transmit	Ammeter	Rear panel	ANT144	Front panel	[+] key or [–] key	Set the adjustment value within the limit of the specified current.	11A
28. UHF SWR protection	1) Menu No. : 122 Display f. : 438.1MHz Mode : CW ANT : Open Transmit			ANT430				8A
• Writing data : After items 5~8 and 12~28 have been adjusted; 1) Menu No. 124 2) [+] or [–] key : Push once time. Display "rEAdy" → "good" (If "nG" is displayed, enter data again.) 3) [CLR] key : Push once time.								
29. AT detection balance	1) Display f. : 51.99MHz Mode : CW Power : 10W Transmit	Oscilloscope Power meter	Filter Rear panel	TP1 (AMD) ANT1	Filter	VR2	Turn the VR2 to the point where the waveform on the oscilloscope changes from high to low. (Threshold point)	

1200MHz Unit PLL Section

Item	Condition	Measurement			Adjustment			Specifications/Remarks
		Test-equipment	Unit	Terminal	Unit	Parts	Method	
1. PLL reference level	1) Display f. : 1268.60MHz Mode : FM	Spectrum analyzer	TX-RX3	CN16	TX-RX3	L338 L339 L340 L341 L342 VR1	Output level max.	–35dBm or more at 39.6MHz.
2. PLL reference spurious	1) Display f. : 1268.60MHz Mode : FM					VR2	Level min. at 31.2MHz.	The output level difference between 39.6MHz and 31.2MHz is 75dB or more.
3. VCO control voltage	1) Display f. : 1299.99MHz	DC V.M		TP2		TC301	4.5V	±0.05V
	2) Display f. : 1240.00MHz						Check	1V or more
4. LO level (Local osc)	1) Display f. : 1270.00MHz Mode : CW Power : 1W Carrier : 0	Spectrum analyzer	Rear panel	ANT1.2G			Set the carrier level at 100mV.	
					TX-RX3	L42 L43 L45	Level max.	

ADJUSTMENT

1200MHz Unit Receiver Section

Item	Condition	Measurement			Adjustment			Specifications/Remarks
		Test-equipment	Unit	Terminal	Unit	Parts	Method	
1. RX IF gain	1) Display f. : 1270.00MHz Mode : FM SSG f. : 1270.00MHz SSG output : –70dBm/70.7μV	SSG Spectrum analyzer	Rear panel TX-RX3	ANT1.2G CN5 (12RIF)	TX-RX3	L22 L24 L25 L29	Level max.	
2. MCF (135.495MHz)	1) Display f. : 135.495MHz Level : –10dBm Spectrum analyzer setting Center f. : 135.495MHz Frequency span : 50kHz XdB/DIV : 2dB RBW : 1kHz VBW : 1kHz	Tracking generator Spectrum analyzer		CN8 CN7		L26 L27 L28	Adjust the coils to obtain the frequency response as shown.	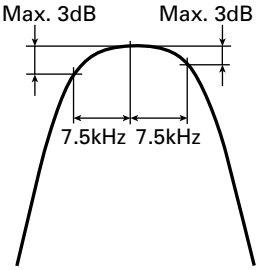
• Perform the following in the adjustment mode. Item 3~7. To terminate the adjustment menu in the middle, save your settings with Menu No. 124.								
3. 1.2G SSB IF gain (AGC start level)	1) Menu No. : 52 Display f. : 1270.20MHz Mode : USB AGC : ON RF GAIN : MAX SSG output : –116dBm/0.35μV	SSG	Rear panel	ANT1.2G	Front panel	[+] key or [–] key	Change the adjustment values within the range of 1 to 5 on the display.	
4. 1.2G SSB S-meter S1	1) Menu No. : 53 Display f. : 1270.20MHz Mode : USB SSG f. : 1270.20MHz SSG output : –113dBm/0.501μV	SSG AF V.M Oscilloscope DM. SP	Rear panel	ANT1.2G EXT. SP	Front panel	[+] key or [–] key	1 push	S-meter lights up to S1 level.
S9	2) Menu No. : 54 SG output : –93dBm/5.01μV							S-meter lights up to S9 level.
Full scale (Lights up all)	3) Menu No. : 55 SSG output : –43dBm/1580μV							S-meter lights up all.
5. 1.2G FM S-meter S1	1) Menu No. : 56 Display f. : 1270.20MHz Mode : FM SSG f. : 1270.20MHz SSG output : –117dBm/0.316μV							S-meter lights up to S1 level.
Full scale (Lights up all)	3) Menu No. : 57 SSG output : –95dBm/3.98μV							S-meter lights up all.
6. 1.2G ALT	1) Menu No. : 58 Display f. : 1270.20MHz Mode : FM SSG output : –53dBm/501μV							
7. 1.2G FM SQL threshold	1) Menu No. : 67 Display f. : 1270.20MHz Mode : FM SSG output : OFF							
• Writing data : After items 5~8 and 12~28 have been adjusted; 1) Menu No. 124 2) [+] or [–] key : Push once time. Display "rEAdy" → "good" (If "nG" is displayed, enter data again.) 3) [CLR] key : Push once time.								

ADJUSTMENT

1200MHz Unit Transmitter Section

Item	Condition	Measurement			Adjustment			Specifications/Remarks
		Test-equipment	Unit	Terminal	Unit	Parts	Method	
1. TX IF gain	1) Display f. : 1270.00MHz Mode : CW Carrier : 0 Transmit	Spectrum analyzer Power meter	Rear panel	ANT1.2G	TX-RX3		Set the carrier level at approx. 100mW.	
						L2 L3 L9	Power max.	
2. MCF (135.395MHz)	1) Disconnect the cable from CN5. Display f. : 135.395MHz Spectrum analyzer setting Center f. : 135.395MHz Frequency span : 50kHz XdB/DIV : 2dB RBW : 1kHz VBW : 1kHz Transmit Connect the cble to CN5.	Tracking generator Spectrum analyzer		CN15 CN14		L320 L321 L5	Adjust the coils to obtain the frequency response as shown.	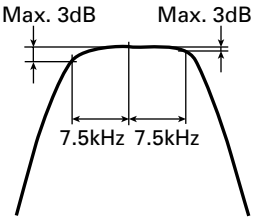
• Perform the following in the adjustment mode. Item 3~6. To terminate the adjustment menu in the middle, save your settings with Menu No. 124.								
3. 1.2G power POC 10W	1) Menu No. : 109 Display f. : 1270.10MHz Mode : USB Transmit	Power meter	Rear panel	ANT1.2G	Front panel	[+] key or [–] key	Set the adjustment value within the limit of the specified power.	10W±0.3W
5W	2) Menu No. : 110 Transmit							5W±0.2W
2.5W	3) Menu No. : 111 Transmit							2.5W±0.1W
1W	4) Menu No. : 112 Transmit							1W±0.1W
4. Band TGC 1240MHz	1) Menu No. : 113 Display f. : 1240.10MHz Mode : USB Transmit							10W±0.3W
1270MHz	2) Menu No. : 114 Display f. : 1270.10MHz Transmit							
1299MHz	3) Menu No. : 115 Display f. : 1299.9MHz Transmit							
5. 1.2G power PGC 2.5W	1) Menu No. : 116 Display f. : 1270.10MHz Mode : USB Transmit							2.5W±0.1W
1W	2) Menu No. : 117 Transmit							1W±0.1W
6. 1.2G protection	1) Menu No. : 123 Display f. : 1270.10MHz Mode : CW ANT : Open Transmit	Ammeter						7A±0.1A If the current is less than 7A, the value is calculated as a maximum current –0.2A.
• Writing data : After items 3~6 have been adjusted; 1) Menu No. 124 2) [+] or [–] key : Push once time. Display "rEAdy" → "good" (If "nG" is displayed, enter data again.) 3) [CLR] key : Push once time.								

ADJUSTMENT

Adjustment Points (Upper Side)

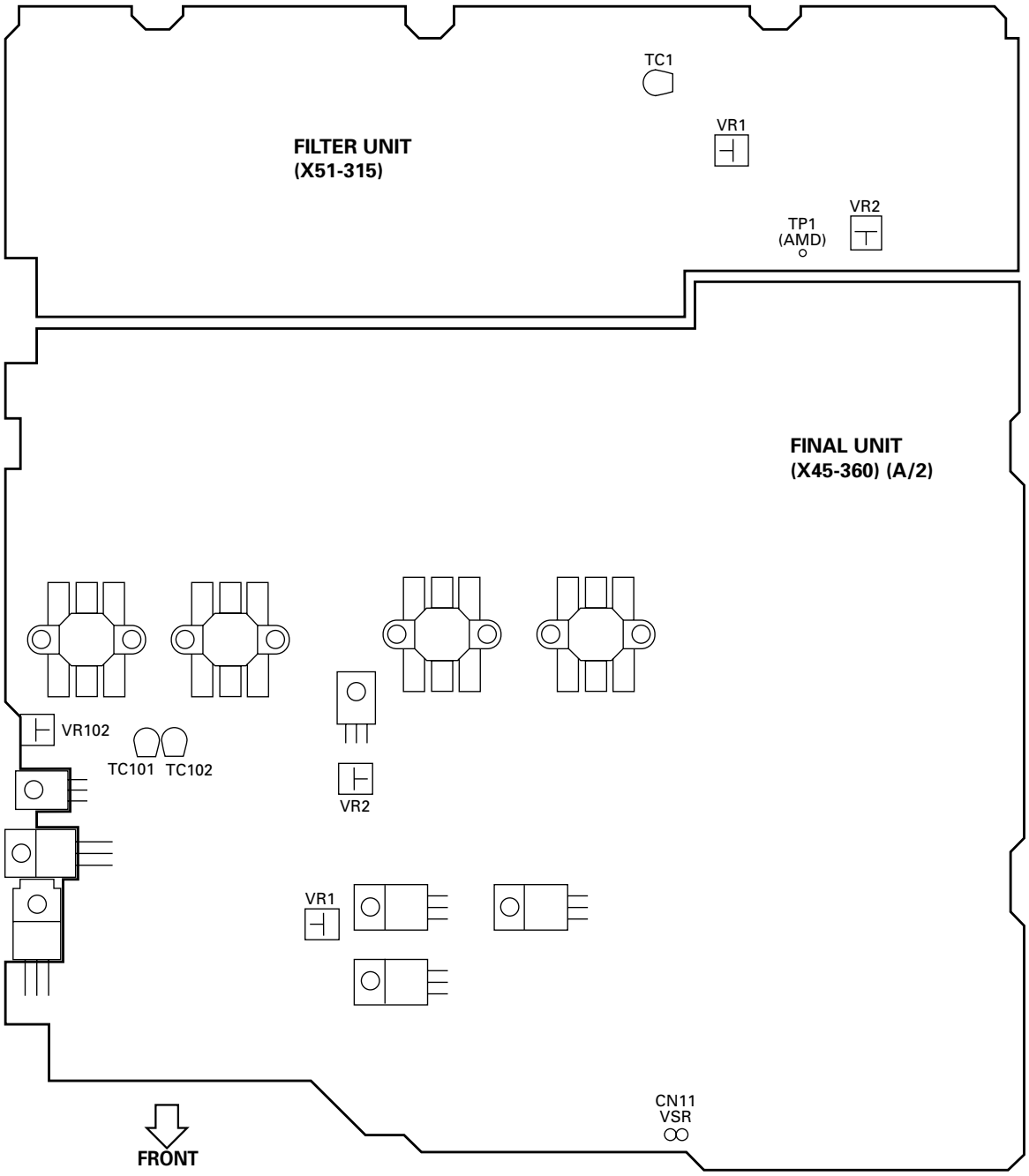

FILTER UNIT
TC1 : Null
VR1 : Power frequency characteristic
VR2 : AT detection balance

FINAL UNIT (A/2)
TC101,102 : VHF Maximum power
VR1,2,102 : Final idling current (HF/VHF)

ADJUSTMENT

Adjustment Points (Lower Side)

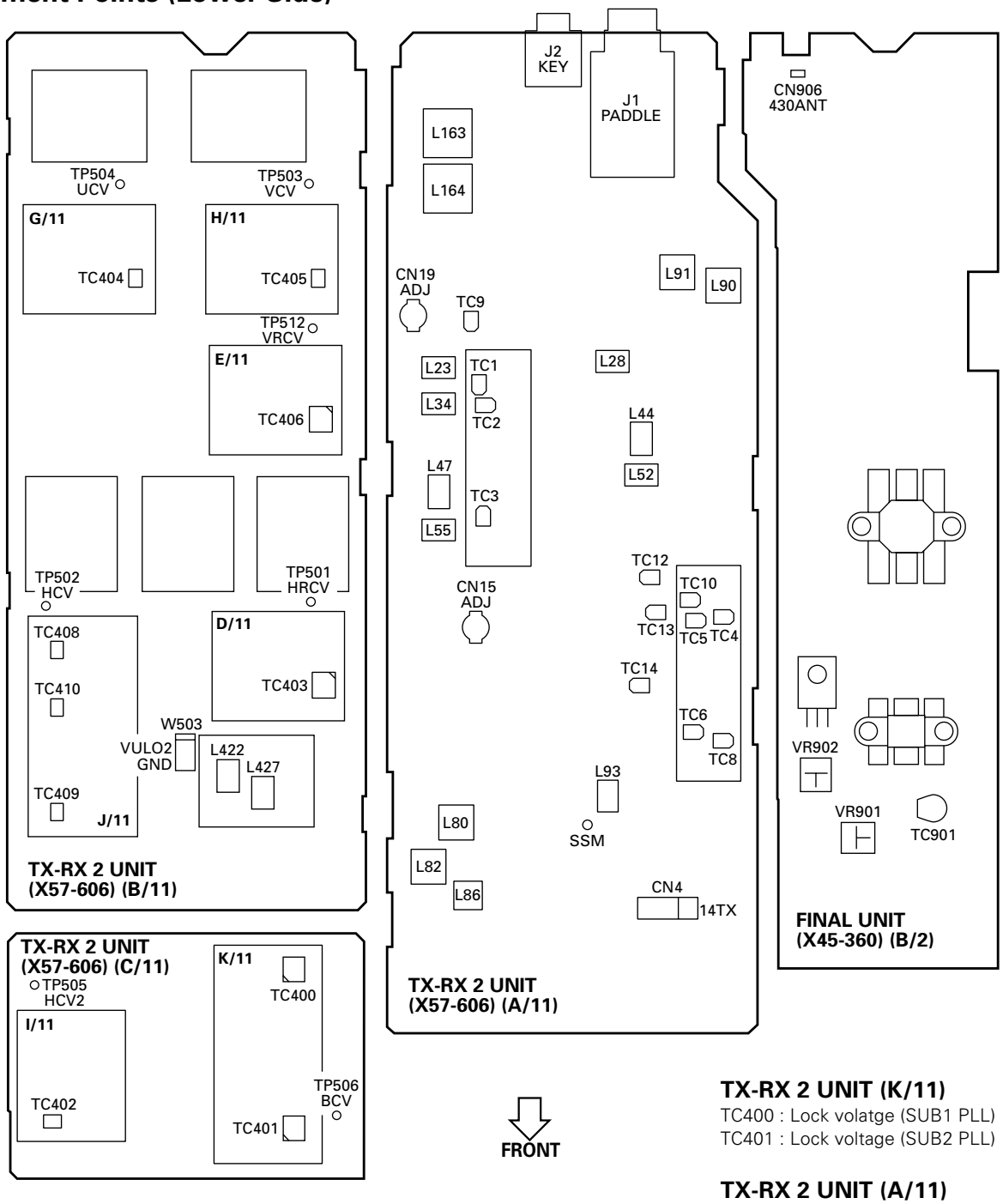

TX-RX 2 UNIT (B/11)
L422,427 : 31.2MHz level

TX-RX 2 UNIT (D/11)
TC403 : Lock volatge (HF REF VCO)

TX-RX 2 UNIT (E/11)
TC406 : Lock volatge (VHF REF VCO)

TX-RX 2 UNIT (G/11)
TC404 : Lock volatge (UHF PLL)

TX-RX 2 UNIT (H/11)
TC405 : Lock volatge (VHF MAIN PLL)

TX-RX 2 UNIT (I/11)
TC402 : Lock voltage (HF LO2 PLL)

TX-RX 2 UNIT (J/11)
TC408 : Lock voltage (HF1 MAIN PLL)
TC409 : Lock voltage (HF3 MAIN PLL)
TC410 : Lock voltage (HF2 MAIN PLL)

TX-RX 2 UNIT (K/11)
TC400 : Lock volatge (SUB1 PLL)
TC401 : Lock voltage (SUB2 PLL)

TX-RX 2 UNIT (A/11)
L23,34,47,55,163,164 : MAIN VHF BPF
L28,44,52 : Sub band BPF
L80,82,86 : RX IF gain (VHF)
L90,91,TC4~6,8,10 : TX BPF (UHF)
L93 : Sub band FM discriminator coil (VHF)
TC1~3,9 : MAIN UHF BPF
TC9 : Trap frequency (UHF)
TC12~14 : TX BPF (VHF)

FINAL UNIT (B/2)
VR901,902 : Final idling current (UHF)
TC901 : UHF maximum powe

ADJUSTMENT

Adjustment Points (Lower Side)

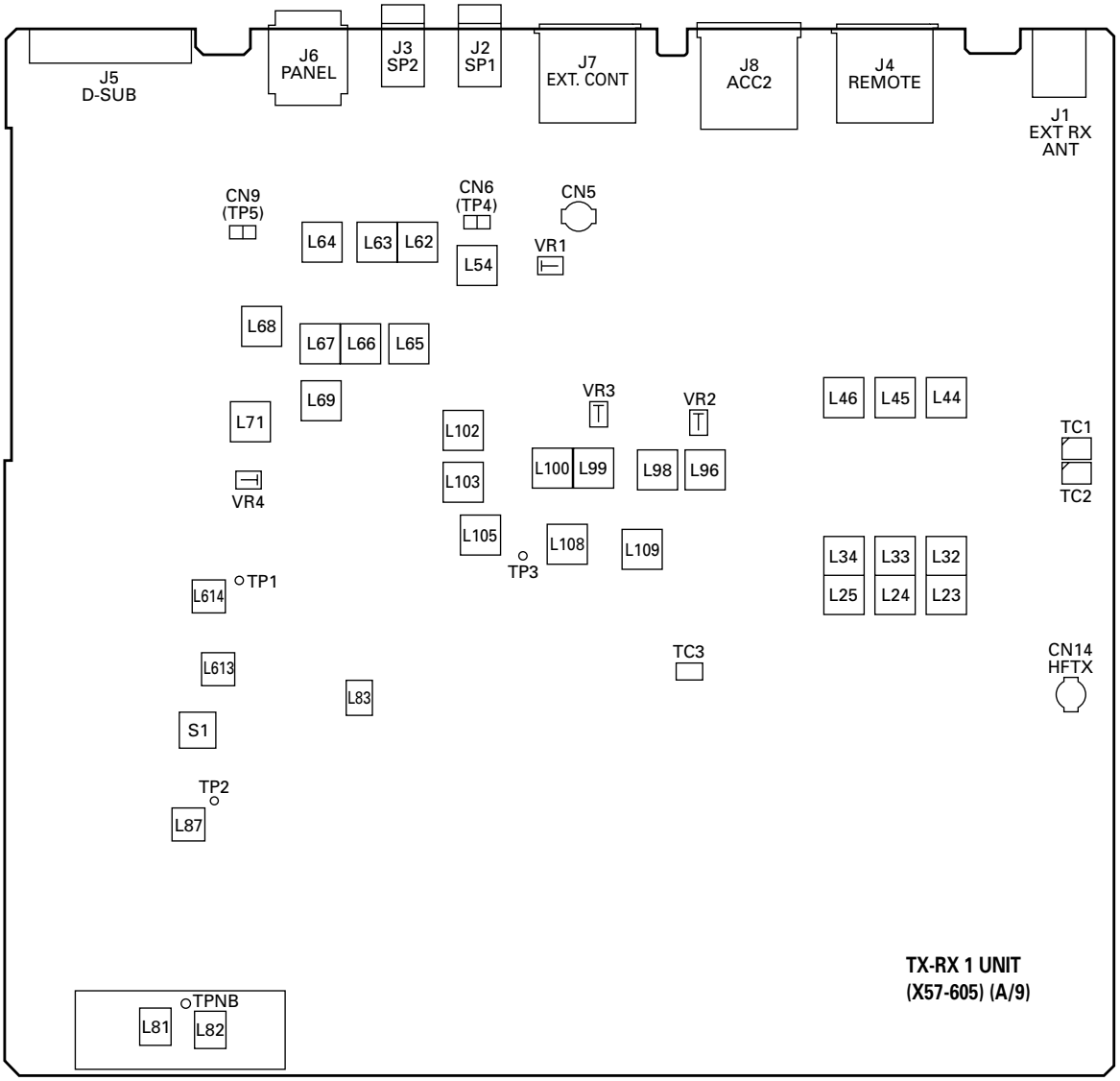

FRONT

TX-RX 1 UNIT (A/9)

L23~25,32~34,44~46 : HF BPF
L54,62~64,68 : MCF (69.085MHz)
L65~67 : MCF (72.925MHz)
L69,71,87,613,614 : HF RX IF gain
L81,82 : NB gain
L83 : FM discriminator coil (HF)
L96,98~100,102,103,105,108,109 : TX IF gain (HF)
L96,98,99,100,102,VR3 : TX IF BPF (HF)
VR1 : 1st mixer balance
VR2 : TX mixer balance
VR4 : Gain balance
TC1,2 : RX trap (E type only)
TC3 : 29.1MHz frequency

ADJUSTMENT

1200MHz Adjustment Points

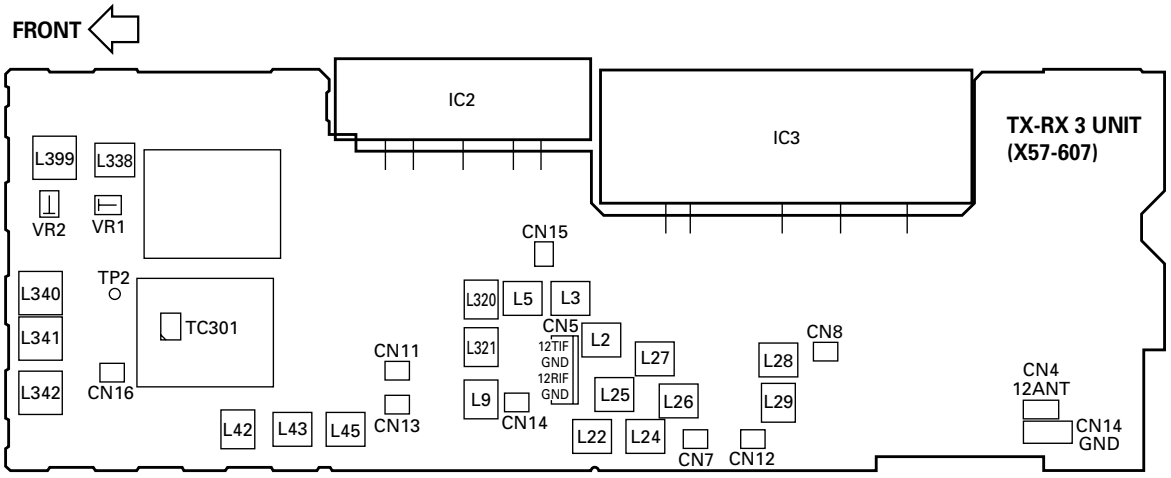

TX-RX 3 UNIT

L2,3,9 : TX IF gain
L5,320,321 : MCF (135.395MHz)
L22,24,25,29 : RX IF gain
L26~28 : MCF (135.495MHz)
L42,43,45 : LO level (Local osc)
L338~342,VR1 : PLL reference level
VR2 : PLL reference spurious
TC301 : VCO control voltage

TERMINAL FUNCTION

FINAL UNIT (X45-360 A/2)

CN No.	Pin No.	Name	I/O	Function
CN5	1	14S	O	Switched 14V for external antenna tuner option
	2	AGND	-	Analog GND
	3	TT	I/O	External antenna tuner (AT-300) in/through control
	4	TS	I/O	External antenna tuner (AT-300) tuning start control
	5	GND	-	GND
CN9	1	14V	O	Constantly 14V
	2	GND	-	GND
	3	GND	-	GND
	4	SPG	-	GND for internal speaker
	5	SP	I	Audio output for internal speaker
	6	14AG	O	GND for audio IC
	7	14AF	O	Power supply for audio IC
	8	14S	O	14V when the power switch on
	9	14S	O	14V when the power switch on
	10	8A	O	8V when the power switch on (analog)
	11	8A	O	8V when the power switch on (analog)
	12	5A	O	5V when the power switch on (analog)
	13	HFTXB	I	HF-50MHz TXB
	14	14TXB	I	144MHz TXB
	15	VSF	O	Forward wave detection voltage of HF-144MHz VSWR
	16	VSR	O	Reflected wave detection voltage of HF-144MHz VSWR
	17	GND	-	GND
	18	NC	-	NC
CN10	1	GND	-	GND
	2	TT	I/O	External antenna tuner (AT-300) in/through control
	3	TS	I/O	External antenna tuner (AT-300) tuning start control
	4	PSC	I	Power on switch control. "H" for power on
	5	BOVR	O	Over voltage detection signal, if the power supply voltage increases more than approx. 19V. Then BOVR becomes "L"
	6	THHF	O	Thermistor detection voltage. This voltage controls fan speed
	7	PHD	O	Output voltage of phase detector in Filter unit
	8	AMD	O	Output voltage of amplitude detector in Filter unit
	9	14D	O	Constantly 14V for digital circuit
	10	8D	O	8V when the power switch on (digital)
	11	10A	O	10V when the power switch on (analog)
	12	8A	O	8V when the power switch on (analog)
	13	DATA	I	Serial data
	14	CLK	I	Serial clock
	15	REN1	I	Enable for IC205
	16	REN2	I	Enable for IC801, 802, 803
CN15	1	NC	-	NC
	2	GND	-	GND
	3	50RL	O	50MHz TX LPF relay control. "H" for LPF active
	4	10RL	O	10MHz TX LPF relay contro. "H" for LPF active
	5	28RL	O	28MHz TX LPF relay control. "H" for LPF active
	6	7RL	O	7MHz TX LPF relay control. "H" for LPF active
	7	21RL	O	21MHz TX LPF relay control. "H" for LPF active
	8	14RL	O	14MHz TX LPF relay control. "H" for LPF active
	9	4RL	O	3.5MHz TX LPF relay control. "H" for LPF active
	10	2RL	O	1.8MHz TX LPF relay control. "H" for LPF active
	11	144RL	O	144MHz TX/RX relay control. "H" for TX
	12	NC	-	NC
CN16	1	VSF	I	Forward wave detection voltage of HF-50MHz, comes from Filter unit then combine with 144MHz VSF
	2	VSR	I	Reflected wave detection voltage of HF-50MHz, comes from Filter unit then combine with 144MHz VSR
	3	PHD	I	Output voltage of phase detector in Filter unit, which passes through Final unit then goes to control unit
	4	AMD	I	Output voltage of amplitude detector in Filter unit, which passes through Final unit then goes to control unit
	5	5A	O	5V when the power switch on (analog)
	6	HFRL	O	HF TX/RX antenna changeover relay control, "H" for TX
	7	ATS	O	Internal antenna tuner in/through changeover relay control, "H" for antenna tuner input

TERMINAL FUNCTION

CN No.	Pin No.	Name	I/O	Function
	8	ANT	O	Antenna 1/2 changeover relay control. "H" for antenna 2
	9	GND	-	GND
	10	NC	-	NC
CN27	1	14S	O	14V when the power switch on
	2	GND	-	GND
	3	GND	-	GND

FINAL UNIT (X45-360 B/2)

CN No.	Pin No.	Name	I/O	Function
CN902	1	UTHV	O	UHF thermal protection detection voltage
	2	43VSF	O	UHF forward wave detection voltage
	3	UTXB	I	UHF TX 8V
	4	14S	I	14V when the power switch on
	5	14S	I	14V when the power switch on
	6	43VSR	O	UHF reflected wave detection voltage
	7	GND	-	GND
	8	GND	-	GND

FILTER UNIT (X51-315)

CN No.	Pin No.	Name	I/O	Function
CN9	1	NC	-	NC
	2	GND	-	GND
	3	50RL	I	50MHz TX LPF relay control. "H" for LPF active
	4	10RL	I	10MHz TX LPF relay control. "H" for LPF active
	5	28RL	I	28MHz TX LPF relay control. "H" for LPF active
	6	7RL	I	7MHz TX LPF relay control. "H" for LPF active
	7	21RL	I	21MHz TX LPF relay control. "H" for LPF active
	8	14RL	I	14MHz TX LPF relay control. "H" for LPF active
	9	4RL	I	3.5MHz TX LPF relay control. "H" for LPF active
	10	2RL	I	1.8MHz TX LPF relay control. "H" for LPF active
	11	144RL	I	144MHz TX/RX relay control. "H" for TX
	12	NC	-	NC
CN10	1	VSF	O	Forward wave detection voltage of HF-50MHz, comes from Filter unit then combine with 144MHz VSF
	2	VSR	O	Reflected wave detection voltage of HF-50MHz, comes from Filter unit then combine with 144MHz VSR
	3	PHD	O	Output voltage of phase detector in Filter unit, which passes through Final unit then goes to control unit
	4	AMD	O	Output voltage of amplitude detector in Filter unit, which passes through Final unit then goes to control unit
	5	5A	I	5V when the power switch on (analog)
	6	HFRL	I	HF TX/RX antenna changeover relay control. "H" for TX
	7	ATS	I	Internal antenna tuner in/through changeover relay control. "H" for antenna tuner input
	8	ANT	I	Antenna 1/2 changeover relay control. "H" for antenna 2
	9	GND	-	GND
	10	NC	-	NC

CONTROL UNIT (X53-391)

CN No.	Pin No.	Name	I/O	Function
CN1	1	FEN2	O	Enable
	2	FEN1	O	Enable
	3	CLK	O	Serial clock
	4	DATA	O	Serial data
	5	8A	I	8V when the power switch on (analog)
	6	10A	I	10V when the power switch on (analog)
	7	8D	I	8V when the power switch on (digital)
	8	14D	I	Constantly 14V for digital circuit
	9	AMD	I	Output voltage of amplitude detector in Filter unit
	10	PHD	I	Output voltage of phase detector in Filter unit
	11	THHF	I	Thermistor detection voltage. This voltage controls fan speed
	12	BOVR	I	Over voltage detection signal, if the power supply voltage increases more than approx. 19V. Then BOVR becomes "L"
	13	PSC	O	Power on switch control. "H" for power on
	14	TS	I/O	External antenna tuner (AT-300) tuning start control
	15	TT	I/O	External antenna tuner (AT-300) in/through control

TERMINAL FUNCTION

CN No.	Pin No.	Name	I/O	Function
	16	GND	-	GND
CN3	1	5V	O	5V
	2	GND	-	GND
	3	PSW	I	Power switch, "L" for power on
	4	INIT	I	"H" for CPU initialize
	5	5D	O	Common 5V for LED
	6	GND	-	GND
CN4	1	DGND	-	GND (Digital)
	2	PBCK	O	Buck up signal (Sub CPU)
	3	PCHK	O	Panel connection check
	4	RES	O	Reset signal (Sub CPU)
	5	TXDO	I	TX data (Main CPU)
	6	RXDO	O	RX data (Main CPU)
	7	RTSO	I	Data transmit inhibit signal (Main CPU)
	8	CTSO	O	Data transmit inhibit signal (Main CPU)
	9	5D	O	5V (Digital)
	10	8A	O	8V (LED)
	11	PRG3	-	
	12	PRG2	-	
	13	PRG1	-	
	14	PSW	I	Power switch output signal
	15	5V	-	
	16	10A	O	10V (Lamp, PLL power supply)
	17	GND	-	GND
	18	GND	-	GND
CN5	1	NC	-	NC
	2	GND	-	GND
	3	THU	I	UHF thermal protection detection voltage
	4	GND	-	GND
	5	SSM	I	Sub band S-meter input
	6	SSQ	I	Sub band squelch input
	7	SALT	I	Sub band auto lock tune input
	8	SRBK	O	Sub band RF blanking signal
	9	REN1	O	IC2 enable
	10	CLK	O	Serial clock
	11	DATA	O	Serial data
	12	NC	-	NC
	13	KEY	I	Key down signal
	14	KYS	I	Key jack judgement signal
	15	DASH	I	Electronic keyer dash signal
	16	DOT	I	Electronic keyer dot signal
	17	GND	-	GND
	18	NC	-	NC
CN6	1	GND	-	GND
	2	12EN3	O	Enable 3 for 1.2GHz unit

CN No.	Pin No.	Name	I/O	Function
	3	12THV	–	Reserved
	4	12UL	I	PLL unlock detect, "L" when 1.2GHz PLL is unlocked
	5	12EN2	O	Enable 2 for 1.2GHz unit
	6	12EN1	O	Enable 1 for 1.2GHz unit
	7	PDA	O	PLL data (1.2GHz unit)
	8	PCK	O	PLL clock (1.2GHz unit)
	9	CKY	O	CW keying, Active "H" to transmit actual wave of all emission
	10	MALT	I	Main auto lock tune (kind of auto frequency control), main discriminator DC output
	11	DEN6	O	DDS enable 6 (IC601)
	12	DEN5	O	DDS enable 5 (IC603)
	13	DEN4	O	DDS enable 4 (IC602)
	14	IEN5	O	IF enable 5 (IC15)
	15	IEN4	O	IF enable 4 (IC14)
	16	IEN3	O	IF enable 3 (IC17)
	17	IEN2	O	IF enable 2 (IC16)
	18	IEN1	O	IF enable 1 (IC5)
	19	CLK	O	Serial clock
	20	DATA	O	Serial data
	21	ALCM	I	ALC meter voltage
	22	VSRM	I	Reflected wave detection voltage of HF-50MHz VSWR
	23	VSFM	I	Forward wave detection voltage of HF-50MHz VSWR
	24	12RXC	O	1.2GHz RX control, Active "H" to enable 1.2GHz RX
	25	12TXC	O	1.2GHz TX control, Active "H" to enable 1.2GHz TX
	26	URXC	O	UHF RX control, Active "H" to enable 430MHz RX
	27	UTXC	O	UHF TX control, Active "H" to enable 430MHz TX
	28	VRXC	O	VHF RX control, Active "H" to enable 144MHz RX
	29	VTXC	O	VHF TX control, Active "H" to enable 144MHz TX
	30	HRXC	O	HF~50MHz RX control, Active "H" to enable HF-50MHz RX
	31	HTXC	O	HF~50MHz TX control, Active "H" to enable HF-50MHz TX
	32	MSQ	I	Main SQ signal output (detected noise ; DC)
	33	MSM	I	Main S-meter signal output

TERMINAL FUNCTION

CN No.	Pin No.	Name	I/O	Function
	34	MRBK	O	Main receive blanking control.
				"H" for blanking
	35	AGCR	O	AGC reference voltage
	36	BATT	I	Back up battery input for MODEM
CN7	1	10A	O	10V (PLL power supply)
	2	PDA	O	PLL serial data
	3	PCK	O	PLL serial clock
	4	DEN3	O	DDS IC (IC407) enable
	5	DEN2	O	DDS IC (IC406) enable
	6	DEN1	O	DDS IC (IC408) enable
	7	PEN6	O	PLL IC (IC402) enable
	8	PEN5	O	PLL IC (IC401) enable
	9	PEN4	O	PLL IC (IC412) enable
	10	PEN3	O	PLL IC (IC410) enable
	11	PEN2	O	PLL IC (IC414) enable
	12	PEN1	O	PLL IC (IC409, 411) enable
	13	PENA	O	Serial/parallel IC (IC404) enable
	14	HFTXC	O	reserved
	15	VTXC	O	VHF-TX control signal,
				"H" when VHF TX is active
	16	UTXC	O	UHF-TX control signal,
				"H" when UHF TX is active
	17	VRXC	O	VHF-RX control signal,
				"H" when VHF main RX is active
	18	URXC	O	UHF-RX control signal,
				"H" when UHF main RX is active
	19	UL	I	PLL unlock detection, "L" active
	20	GND	-	GND
CN503	1	MIC	I	Mic signal input
	2	MSG	-	Mic GND
	3	MCG	-	GND
	4	MU	I	Mic up signal
	5	MD	I	Mic down signal
	6	SS	I	Standby switch
	7	8A	O	8V (EXT Mic)
CN504	1	PRGS	I	"L" for MAIN CPU write
	2	12OP	I	"H" when 1.2GHz unit installed
	3	GND	-	GND
	4	VO	I	VS-3 audio output
	5	GND	-	GND
	6	NAR	O	"H" for data input enable to VS-3
	7	RST	O	VS-3 reset signal
	8	VCS	O	VS3 voice synthesizer start signal
	9	GND	-	GND
	10	DRM	O	Audio in for DRU-3A
	11	GND	-	GND

CN No.	Pin No.	Name	I/O	Function
	12	DRO	I	Audio out from DRU-3A
	13	GND	-	GND
	14	EOM	I	End of message from DRU-3A.
				"H" for end
	15	DREN	O	Enable for DRU-3A voice recording
				unit
	16	STS	O	Start switch, active "H". When START
				is "H", CPU get this signal then send
				back STS to IF unit to turn ON IC10,
				11, 604.
	17	AMU	O	Audio Mute, Active "H" to mute SP1/
				SP2 output
	18	GND	-	GND
	19	MANO	O	Main RX AF signal from DSP
	20	GND	-	GND
	21	SANO	O	Sub RX AF signal from DSP
	22	GND	-	GND
	23	PKD	I	Packet (modulation) data, packet
				modulation data for DSP
	24	GND	-	GND
	25	SS	I	Standby switch, active low to TX
	26	PKSA	I	Packet standby switch, active "L" to
				packet TX
	27	RTK	I	RTTY keying, active "L" to frequency
				shift
	28	SPS	I	Speaker switch, "OPEN" when SP2
				is active
	29	RXD1	I	Level converted (5V) RXD
				(J6 : REMORT PANEL)
	30	TXD1	O	Level converted (5V) TXD
				(J6 : REMORT PANEL)
	31	START	I	Active "H" when data comes from
				REMOTE PANEL or PC
	32	RXD2	O	Level converted (5V) RXD
				(J5 : RS-232C)
	33	RTS2	I	Level converted (5V) RTS
				(J5 : RS-232C)
	34	TXD2	I	Level converted (5V) TXD
				(J5 : RS-232C)
	35	CTS2	O	Level converted (5V) CTS
				(J5 : RS-232C)
	36	GND	-	GND
CN505	1	MAF	O	Main audio (SP1) output
	2	GND	-	GND
	3	SAF	O	Sub audio (SP2) output
	4	GND	-	GND

TERMINAL FUNCTION

CN No.	Pin No.	Name	I/O	Function
CN506	1	MOD	O	Modulation output
	2	GND	-	GND
	3	MDET	I	Main band detection input
	4	GND	-	GND
	5	SDET	I	Sub band detection input
	6	GND	-	GND

DISPLAY UNIT (X54-332)

CN No.	Pin No.	Name	I/O	Function
CN1	1	DGND	-	GND (Digital)
	2	NC	-	NC
	3	NC	-	NC
	4	LRES	I	Reset signal (Dot LCD IC)
	5	NC	-	NC
	6	LCS4	I	Chip selector 4 (Serial/parallel IC)
	7	LCS3	I	Chip selector 3 (Dot LCD IC)
	8	LCS2	I	Chip selector 2 (7 seg LCD IC)
	9	LCS1	I	Chip selector 1 (7 seg LCD IC)
	10	LDA	I	LCD serial data
	11	LCK	I	LCD serial clock
	12	LMO	I	Mode set up signal (7 seg LCD IC)
	13	LINH	I	Display inhibit signal (7 seg LCD IC)
	14	5D	I	5V (Digital)
	15	KA	O	Key matrix output A
	16	KB	O	Key matrix output B
	17	KC	O	Key matrix output C
	18	S0	I	Key matrix input 0
	19	S1	I	Key matrix input 1
	20	S2	I	Key matrix input 2
	21	S3	I	Key matrix input 3
	22	PSW	O	Power switch output signal
	23	NC	-	NC
	24	LEDB	I	LED power supply voltage
	25	10A	I	10V (Lamp)
	26	GND	-	GND

TX-RX 1 UNIT (X57-605 A/9)

CN No.	Pin No.	Name	I/O	Function
CN16	1	MAF	I	Main audio (SP1) input from DSP
	2	GND	-	GND
	3	SAF	I	Sub audio (SP2) input from DSP
	4	GND	-	GND
CN17	1	MOD	I	Modulation input, Modes other than FM : 12kHz IF input, FM mode : AF input
	2	GND	-	GND
CN18	1	MDET	O	Main detect output, Modes other than FM : 12kHz IF output, FM mode : AF output
	2	GND	-	GND
CN20	1	VCK	I	Clock for VS-3
	2	VDT	I	Data for VS-3
	3	VCS	I	VS-3 voice synthesizer start signal
	4	RST	I	VS-3 reset signal
	5	NAR	I	"H" for data input enable to VS-3
	6	E	-	GND
	7	5C	I	Common 5V
	8	VO	O	VS-3 audio output
CN21	1	AGND	-	Analog GND
	2	DRMG	-	AF GND
	3	DRM	I	Audio input for DRU-3A
	4	DRO	O	Audio output from DRU-3A
	5	5D	I	Common 5V
	6	DGND	-	Digital GND
	7	EOM	I	End of message from DRU-3A "H" for end
	8	NC	-	NC
	9	DREN	I	Enable for DRU-3A voice recording unit
	10	SD	I	Data for DRU-3A
	11	SCK	I	Serial clock for DRU-3A
CN24	1	GND	-	GND
	2	CTS2	I	Level converted (5V) CTS (J5 : RS-232C)
	3	TXD2	O	Level converted (5V) TXD (J5 : RS-232C)
	4	RTS2	O	Level converted (5V) RTS (J5 : RS-232C)
	5	RXD2	I	Level converted (5V) RXD (J5 : RS-232C)
	6	START	O	Active "H" when data comes from REMOTE PANEL or PC
	7	TXD1	I	Level converted (5V) TXD (J6 : REMORT PANEL)
	8	RXD1	O	Level converted (5V) RXD (J6 : REMORT PANEL)
	9	SPS	O	Speaker switch, "OPEN" when SP2 is active
	10	RTK	O	RTTY keying, Active "L" to frequency shift
	11	PKSA	O	Packet standby switch, active "L" to packet TX
	12	SS	O	Standby switch, active low to TX
	13	GND	-	GND
	14	PKD	O	Packet (modulation) data, packet modulation data for DSP
	15	GND	-	GND
	16	SANO	I	Sub RX AF signal from DSP
	17	GND	-	GND
	18	MANO	I	Main RX AF signal from DSP

TERMINAL FUNCTION

CN No.	Pin No.	Name	I/O	Function
	19	GND	-	GND
	20	AMU	I	Audio Mute, active "H" to mute SP1/ SP2 output
	21	STS	I	Start switch, active "H". When START is "H", CPU gets this signal, then send back STS to this unit to turn ON IC10, 11, 604.
	22	DREN	I	Enable for DRU-3A Voice recording unit
	23	EOM	O	End of message from DRU-3A "H" for end
	24	GND	-	GND
	25	DRO	O	Audio out from DRU-3A
	26	GND	-	GND
	27	DRM	I	Audio in for DRU-3A
	28	GND	-	GND
	29	VCS	I	VS3 voice synthesizer start signal
	30	RST	I	VS-3 reset signal
	31	NAR	I	"H" for data input enable to VS-3
	32	GND	-	GND
	33	VO	O	VS-3 audio output
	34	GND	-	GND
	35	12OP	O	"H" when 1.2GHz unit installed
	36	PRGS	O	"L" for MAIN CPU write
CN25	1	BATT	O	Back up battery output for MODEM
	2	AGCR	I	AGC reference voltage
	3	MRBK	I	Main receive blanking control. "H" for blanking
	4	MSM	O	Main S-meter signal output
	5	MSQ	O	Main SQ signal output (detected noise ; DC)
	6	HTXC	I	HF~50MHz TX control, Active "H" to enable HF-50MHz TX
	7	HRXC	I	HF~50MHz RX control, Active "H" to enable HF-50MHz RX
	8	VTXC	I	VHF TX control, Active "H" to enable 144MHz TX
	9	VRXC	I	VHF RX control, Active "H" to enable 144MHz RX
	10	UTXC	I	UHF TX control, Active "H" to enable 430MHz TX
	11	URXC	I	UHF RX control, Active "H" to enable 430MHz RX
	12	12TXC	I	1.2GHz TX control, Active "H" to enable 1.2GHz TX
	13	12RXC	I	1.2GHz RX control, Active "H" to enable 1.2GHz RX

CN No.	Pin No.	Name	I/O	Function
	14	VSFM	O	Forward wave detection voltage of HF-50MHz VSWR, amplified by IC19
	15	VSRM	O	Reflected wave detection voltage of HF-50MHz VSWR, amplified by IC19
	16	ALCM	O	ALC meter voltage
	17	DATA	I	Serial data
	18	CLK	I	Serial clock
	19	IEN1	I	IF enable 1 (IC5)
	20	IEN2	I	IF enable 2 (IC16)
	21	IEN3	I	IF enable 3 (IC17)
	22	IEN4	I	IF enable 4 (IC14)
	23	IEN5	I	IF enable 5 (IC15)
	24	DEN4	I	DDS enable 4 (IC602)
	25	DEN5	I	DDS enable 5 (IC603)
	26	DEN6	I	DDS enable 6 (IC601)
	27	MALT	O	Main auto lock tune (kind of auto frequency control), main discriminator DC output
	28	CKY	I	CW keying, Active "H" to transmit actual wave of all emission
	29	PCK	I	PLL clock (1.2GHz unit)
	30	PDA	I	PLL data (1.2GHz unit)
	31	12EN1	I	Enable 1 for 1.2GHz unit
	32	12EN2	I	Enable 2 for 1.2GHz unit
	33	12UL	O	PLL unlock detect, "L" when 1.2GHz PLL is unlocked
	34	12THV	-	Reserved
	35	12EN3	I	Enable 3 for 1.2GHz unit
	36	GND	-	GND
CN26	1	GND	-	GND
	2	43VSF	I	Forward wave detection voltage of 430MHz VSWR
	3	14S	O	14V when the power switch on
	4	14S	O	14V when the power switch on
	5	43VSR	I	Reflected wave detection voltage of 430MHz VSW
	6	UTXB	O	430MHz TXB approx. 8V
	7	VTXB	O	144MHz TXB approx. 8V
	8	AGC	O	AGC
	9	5C	O	Common 5V
	10	TBPF	O	Control voltage for variable capacitor of TX BPF

TERMINAL FUNCTION

CN No.	Pin No.	Name	I/O	Function
	11	SBPF	O	Control voltage for variable capacitor of SUB RX BPF
	12	8C	O	Common 8V
	13	MBPF	O	Control voltage for variable capacitor of Main RX BPF
	14	URXB	O	430MHz RXB approx. 8V
	15	VRXB	O	144MHz RXB approx. 8V
	16	UATT	O	UHF RX attenuater, "H" active
	17	VATT	O	VHF RX attenuater, "H" active
	18	GND	-	GND
CN27	1	GND	-	GND
	2	12EN3	O	Enable 3 for 1.2GHz unit
	3	PCK	O	PLL clock (1.2GHz unit)
	4	PDA	O	PLL data (1.2GHz unit)
	5	12EN1	O	Enable 1 for 1.2GHz unit
	6	12EN2	O	Enable 2 for 1.2GHz unit
	7	12UL	I	PLL unlock detect, "L" when 1.2GHz PLL is unlocled
	8	12THV	-	Reserved
	9	12OP	I	"H" when 1.2GHz unit installed
	10	AGC	O	AGC voltage for 1.2GHz unit
	11	12RXB	O	1.2GHz RXB
	12	12TXB	O	1.2GHz TXB
	13	NC	-	NC
	14	5C	O	Common 5V
	15	12VSR	I	Reflected wave detection voltage of 1.2GHz VSWR
	16	12VSF	I	Forward wave detection voltage of 1.2GHz VSWR
	17	GND	-	GND
	18	NC	-	NC
CN29	1	14V	I	Constantly 14V
	2	GND	-	GND
	3	GND	-	GND
	4	SPG	-	GND for internal speaker
	5	SP	O	Audio output for internal speaker
	6	14AG	I	GND for audio IC
	7	14AF	I	Power supply for audio IC
	8	14S	I	14V when the power switch on
	9	14S	I	14V when the power switch on
	10	8A	I	8V when the power switch on (analog)
	11	8A	I	8V when the power switch on (analog)
	12	5A	I	5V when the power switch on (analog)
	13	HFTXB	O	HF-50MHz TXB
	14	14TXB	O	144MHz TXB
	15	VSF	I	Forward wave detection voltage of HF-144MHz VSWR
	16	VSR	I	Reflected wave detection voltage of HF-144MHz VSWR
	17	GND	-	GND
	18	NC	-	NC
CN31	1	SP1	O	Main AF output to phone jack
	2	SP2	I	Main AF input from phone jack
	3	PHG		GND for phone jack
CN32	1	SP3	O	Sub AF output to phone jack
	2	SP4	I	Sub AF input from phone jack
	3	PHG	-	GND for phone jack
	4	NC	-	NC

TX-RX 1 UNIT (X57-605 B/9)

CN No.	Pin No.	Name	I/O	Function
CN800	1	DGND	-	GND (Digital)
	2	PBKC	I	Buck up signal (Sub CPU)
	3	PCHK	I	Panel connection check
	4	RES	I	Reset signal (Sub CPU)
	5	TXD0	O	TX data (Main CPU)
	6	RXD0	I	RX data (Main CPU)
	7	RTS0	O	Data transmit inhibit signal (Main CPU)
	8	CTS0	I	Data transmit inhibit signal (Main CPU)
	9	5D	I	5V (Digital)
	10	8A	I	8V (LED)
	11	NC	-	NC
	12	NC	-	NC
	13	NC	-	NC
	14	PSW	O	Power switch output signal
	15	NC	-	NC
	16	10A	I	10V (Lamp, PLL power supply)
	17	GND	-	GND
	18	GND	-	GND
CN801	1	DGND	-	GND (Digital)
	2	NC	-	NC
	3	NC	-	NC
	4	LRES	O	Reset signal (Dot LCD IC)
	5	NC	-	NC
	6	LCS4	O	Chip selector 4 (Serial/parallel IC)
	7	LCS3	O	Chip selector 3 (Dot LCD IC)
	8	LCS2	O	Chip selector 2 (7 seg LCD IC)
	9	LCS1	O	Chip selector 1 (7 seg LCD IC)
	10	LDA	O	LCD serial data
	11	LCK	O	LCD serial clock

TERMINAL FUNCTION

CN No.	Pin No.	Name	I/O	Function
	12	LMO	O	Mode set up signal (7 seg LCD IC)
	13	LINH	O	Display inhibit signal (7 seg LCD IC)
	14	5D	O	5V (Digital)
	15	KA	I	Key matrix input A
	16	KB	I	Key matrix input B
	17	KC	I	Key matrix input C
	18	S0	O	Key matrix output 0
	19	S1	O	Key matrix output 1
	20	S2	O	Key matrix output 2
	21	S3	O	Key matrix output 3
	22	PSW	I	Power switch input signal
	23	NC	-	NC
	24	LEDB	O	LED power supply voltage
	25	10A	O	10V (Lamp)
	26	GND	-	GND
CN804	1	5D	O	5V (Encoder)
	2	MENB	I	Main encoder pulse B
	3	MENA	I	Main encoder pulse A
	4	DGND	-	GND (Digital)
CN805	1	DGND	-	GND (Digital)
	2	5D	O	5V (Digital)
	3	SUBS	I	Sub ON/OFF switch input signal
	4	SSQL	I	Sub SQL VR analog voltage
	5	SAF	I	Sub AF VR analog voltage
	6	NC	-	NC
	7	MUL2	I	MULTI/CH encoder pulse 2
	8	MUL1	I	MULTI/CH encoder pulse 1
	9	RITB	I	RIT/SUB encoder pulse 2
	10	RITA	I	RIT/SUB encoder pulse 1
	11	NC	-	NC
	12	SUB	O	Control signal for SUB LED
	13	MULTI	O	Control signal for MULTI LED
	14	CON	O	Control signal for CON LED
	15	STA	O	Control signal for STA LED
	16	9.6K	O	Control signal for 9.6K LED
	17	LEDB	O	LED power supply
	18	NC	-	NC
CN806	1	5D	O	5V (VR)
	2	CWBC	I	CW beat cancel VR analog voltage
	3	MRF	I	Main RF VR analog voltage
	4	NC	-	NC
	5	NC	-	NC
	6	MAF	I	Main AF VR analog voltage
	7	MSQL	I	Main SQL VR analog voltage
	8	DGND	-	GND (Digital)

TX-RX 1 UNIT (X57-605 F/9)

CN No.	Pin No.	Name	I/O	Function
CN951	1	MIC	O	Mic signal output
	2	MSG	-	Mic GND
	3	MCG	-	GND
	4	MU	O	Mic up signal
	5	MD	O	Mic down signal
	6	SS	O	Standby switch
	7	8A	I	8V (EXT Mic)

TX-RX 1 UNIT (X57-605 G/9)

CN No.	Pin No.	Name	I/O	Function
CN950	1	SP1	I	Audio input for headphone
	2	SP2	O	Audio output when headphone through
	3	PHG	-	GND for phone jack
	4	SP3	I	Audio input for headphone
	5	SP4	O	Audio output when headphone through
	6	PHG	-	GND for phone jack

TX-RX 2 UNIT (X57-606 A/11)

CN No.	Pin No.	Name	I/O	Function
CN9	1	SDET	O	Sub RX detection output (144, 430MHz)
	2	GND	-	GND
CN10	1	RIF	O	Main RX IF output (144, 430MHz)
	2	GND	-	GND
CN12	1	UTHV	I	UHF thermal protection detection voltage
	2	43VSF	I	UHF forward wave detection voltage
	3	UTXB	O	UHF TX 8V
	4	14S	O	14V when the power switch on
	5	14S	O	14V when the power switch on
	6	43VSR	I	UHF reflected wave detection voltage
	7	GND	-	GND
	8	GND	-	GND
CN14	1	NC	-	NC
	2	GND	-	GND
	3	THU	O	UHF thermal protection detection voltage
	4	GND	-	GND
	5	SSM	O	Sub band S-meter output
	6	SSQ	O	Sub band squelch output
	7	SALT	O	Sub band auto lock tune output
	8	SRBK	I	Sub band RF blanking signal

TERMINAL FUNCTION

CN No.	Pin No.	Name	I/O	Function
	9	REN1	I	IC2 enable
	10	CLK	I	Serial clock
	11	DATA	I	Serial data
	12	NC	-	NC
	13	KEY	O	Key down signal
	14	KYS	O	Key jack judgement signal
	15	DASH	O	Electronic keyer dash signal
	16	DOT	O	Electronic keyer dot signal
	17	GND	-	GND
	18	NC	-	NC
CN17	1	GND	-	GND
	2	43VSF	O	Forward wave detection voltage of 430MHz VSWR
	3	14S	I	14V when the power switch on
	4	14S	I	14V when the power switch on
	5	43VSR	O	Reflected wave detection voltage of 430MHz VSW
	6	UTXB	I	430MHz TXB approx. 8V
	7	VTXB	I	144MHz TXB approx. 8V
	8	AGC	I	AGC
	9	5C	I	Common 5V
	10	TBPF	I	Control voltage for variable capacitor of TX BPF
	11	SBPF	I	Control voltage for variable capacitor of SUB RX BPF
	12	8C	I	Common 8V
	13	MBPF	I	Control voltage for variable capacitor of Main RX BPF
	14	URXB	I	430MHz RXB approx. 8V
	15	VRXB	I	144MHz RXB approx. 8V
	16	UATT	I	VHF RX attenuater, "H" active
	17	VATT	I	UHF RX attenuater, "H" active
	18	GND	-	GND

TX-RX 2 UNIT (X57-606 B/11)

CN No.	Pin No.	Name	I/O	Function
CN501	1	10A	I	10V (PLL power supply)
	2	PDA	I	PLL serial data
	3	PCK	I	PLL serial clock
	4	DEN3	I	DDS IC (IC407) enable
	5	DEN2	I	DDS IC (IC406) enable
	6	DEN1	I	DDS IC (IC408) enable
	7	PEN6	I	PLL IC (IC402) enable
	8	PEN5	I	PLL IC (IC401) enable
	9	PEN4	I	PLL IC (IC412) enable
	10	PEN3	I	PLL IC (IC410) enable
	11	PEN2	I	PLL IC (IC414) enable
	12	PEN1	I	PLL IC (IC409, 411) enable
	13	PENA	I	Serial/parallel IC (IC404) enable
	14	HFTXC	I	HF-TX control signal
	15	VTXC	I	VHF-TX control signal. "H" : VHF TX
	16	UTXC	I	UHF-TX control signal. "H" : UHF TX
	17	VRXC	I	VHF-RX control signal. "H" : VHF RX
	18	URXC	I	UHF-RX control signal. "H" : UHF RX
	19	UL	O	PLL unlock detection. "L" : Active
	20	GND	-	GND

TX-RX 3 UNIT (X57-607)

CN No.	Pin No.	Name	I/O	Function
CN1	1	14S	I	14V when the power switch on
	2	GND	-	GND
CN5	1	12TIF	I	1.2GHz TX IF (10.595MHz)
	2	GND	-	GND
	3	12RIF	O	1.2GHz RX IF (10.695MHz)
	4	GND	-	GND
CN6	1	GND	-	GND
	2	12EN3	I	Enable 3 for 1.2GHz unit
	3	PCK	I	PLL clock (1.2GHz unit)
	4	PDA	I	PLL data (1.2GHz unit)
	5	12EN1	I	Enable 1 for 1.2GHz unit
	6	12EN2	I	Enable 2 for 1.2GHz unit
	7	12UL	O	PLL unlock detect, "L" when 1.2GHz PLL is unlocled
	8	12THV	-	Reserved
	9	12OP	O	"H" when 1.2GHz unit installed
	10	AGC	I	AGC voltage for 1.2GHz unit
	11	12RXB	I	1.2GHz RXB
	12	12TXB	I	1.2GHz TXB
	13	NC	-	NC
	14	5C	I	Common 5V
	15	12VSR	O	Reflected wave detection voltage of 1.2GHz VSWR
	16	12VSF	O	Forward wave detection voltage of 1.2GHz VSWR
	17	GND	-	GND
	18	NC	-	NC

WIRING

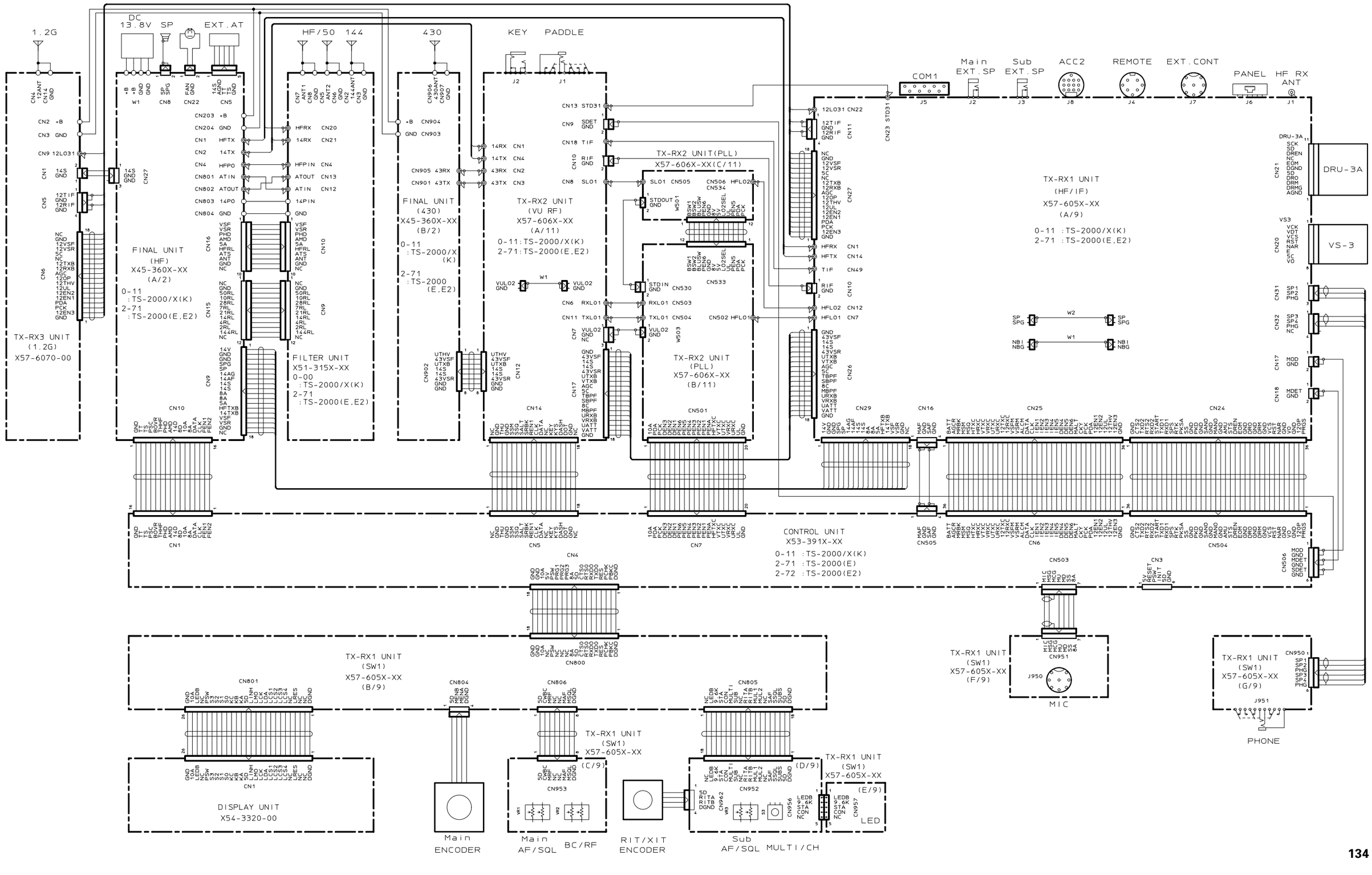
1.2G
DC 13.8V
SP
EXT.AT
HF/50 144
430
KEY
PADDLE
COM1
Main EXT.SP
Sub EXT.SP
ACC2
REMOTE
EXT.CONT
PANEL
HF RX ANT
TX-RX3 UNIT (1.2G) X57-6070-00
FINAL UNIT (HF) X45-360X-XX (A/2)
0-11 :TS-2000/X(K)
2-71 :TS-2000(E,E2)
FILTER UNIT X51-315X-XX
0-00 :TS-2000/X(K)
2-71 :TS-2000(E,E2)
FINAL UNIT (430) X45-360X-XX (B/2)
0-11 :TS-2000/X(K)
2-71 :TS-2000(E,E2)
TX-RX2 UNIT (VU RF) X57-606X-XX (A/11)
0-11:TS-2000/X(K)
2-71:TS-2000(E,E2)
TX-RX2 UNIT(PLL) X57-606X-XX(C/11)
TX-RX2 UNIT (PLL) X57-606X-XX (B/11)
TX-RX1 UNIT (HF/IF) X57-605X-XX (A/9)
0-11 :TS-2000/X(K)
2-71 :TS-2000(E,E2)
DRU-3A
VS-3
CONTROL UNIT X53-391X-XX
0-11 :TS-2000/X(K)
2-71 :TS-2000(E)
2-72 :TS-2000(E2)
TX-RX1 UNIT (SW1) X57-605X-XX (B/9)
TX-RX1 UNIT (SW1) X57-605X-XX (C/9)
TX-RX1 UNIT (SW1) X57-605X-XX (D/9)
TX-RX1 UNIT (SW1) X57-605X-XX (E/9)
TX-RX1 UNIT (SW1) X57-605X-XX (F/9)
TX-RX1 UNIT (SW1) X57-605X-XX (G/9)
DISPLAY UNIT X54-3320-00
MIC
PHONE
LED
Main ENCODER
Main AF/SQL
BC/RF
RIT/XIT ENCODER
Sub AF/SQL MULTI/CH

FILTER UNIT (X51-315X-XX) 0-00 : K,KX 2-71 : E,E2
Component side view

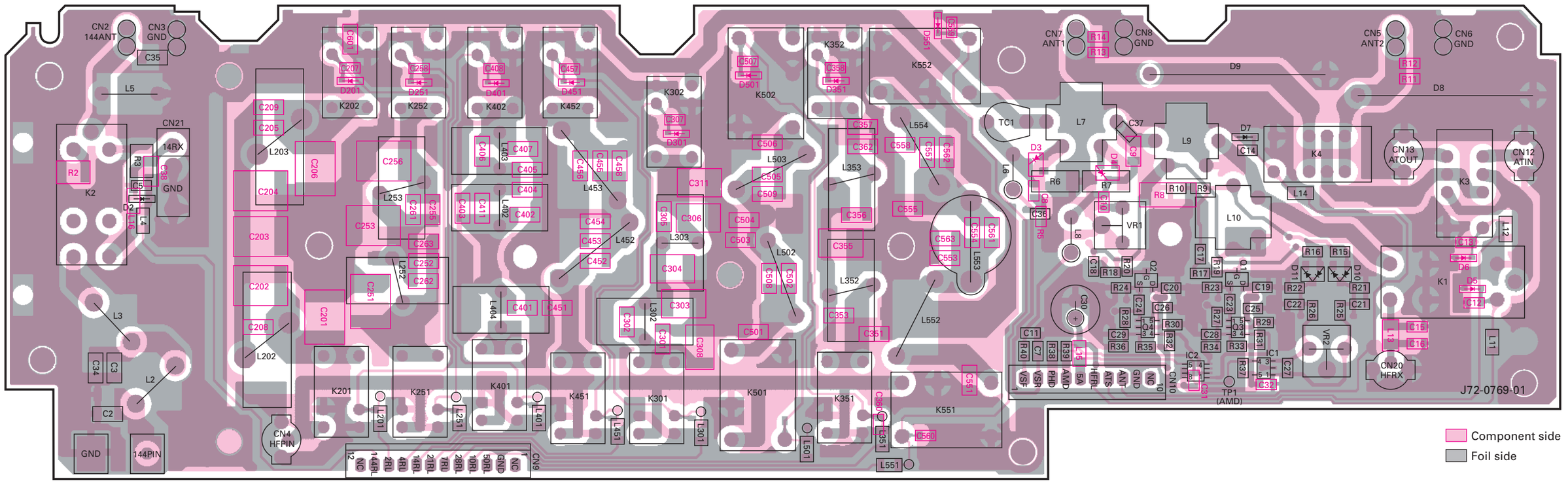

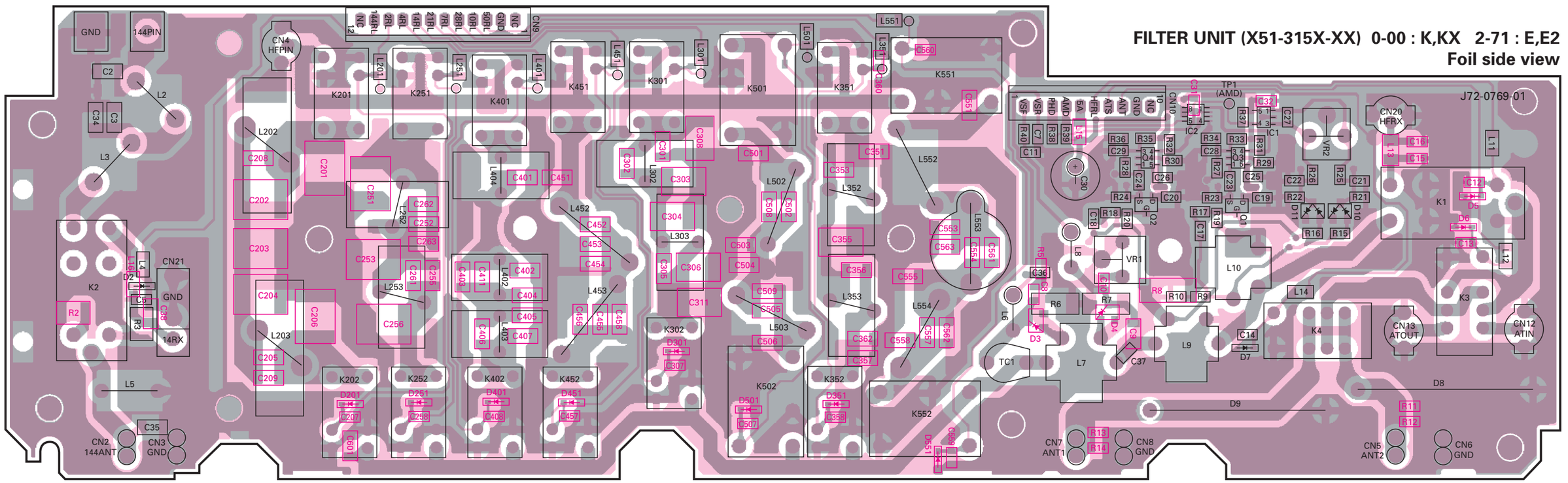

FILTER UNIT (X51-315X-XX) 0-00 : K,KX 2-71 : E,E2
Foil side view

FINAL UNIT (X45-360X-XX) (A/2) 0-11 : K,KX 2-71 : E,E2 Component side view

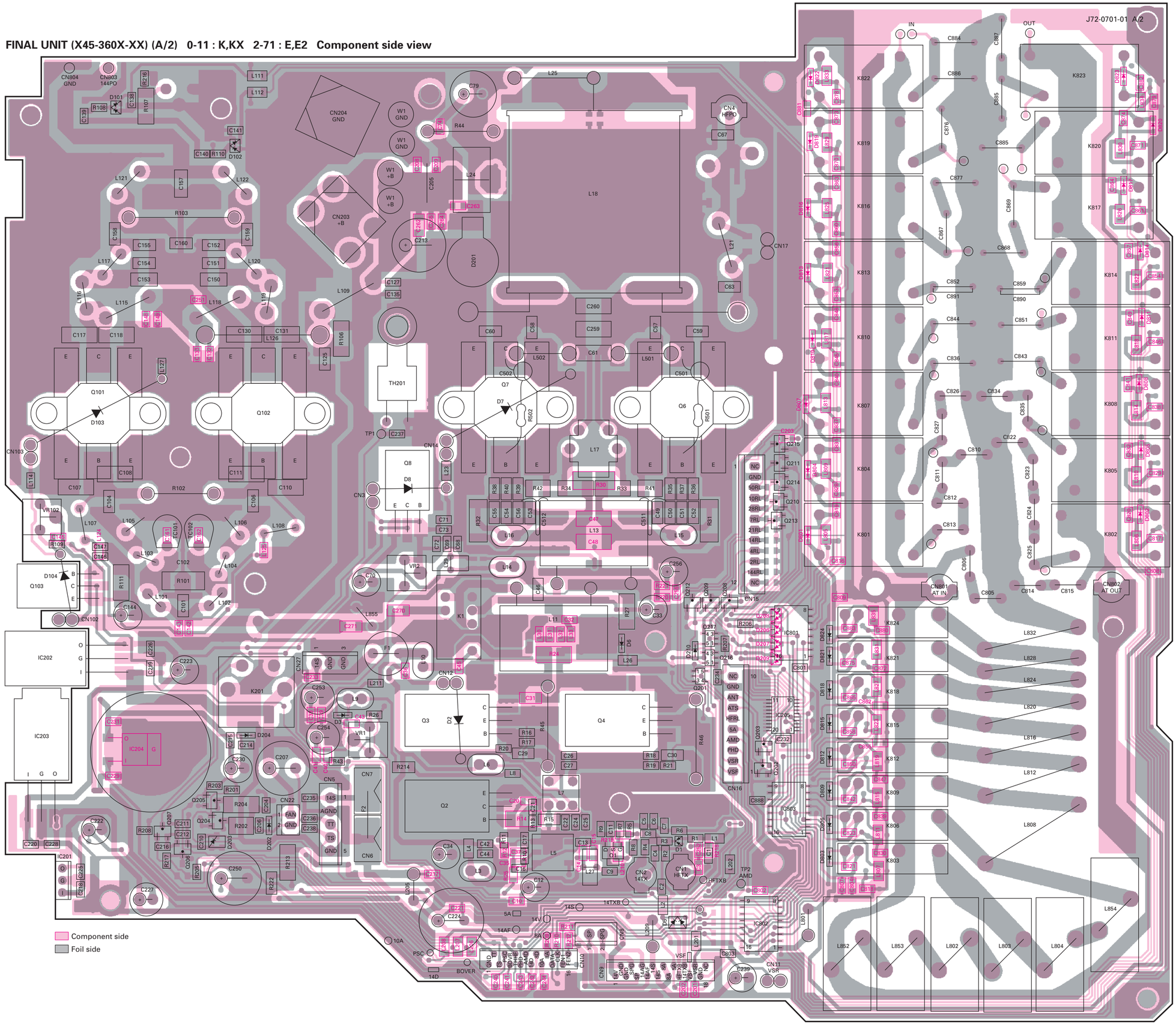

TS-2000/X PC BOARD VIEW

FINAL UNIT (X45-360X-XX) (A/2) 0-11 : K,KX 2-71 : E,E2 Foil side view

J72-0701-01 A/2

Component side
Foil side

Note : Components marked with a dot (-) are parts of pattern 1.

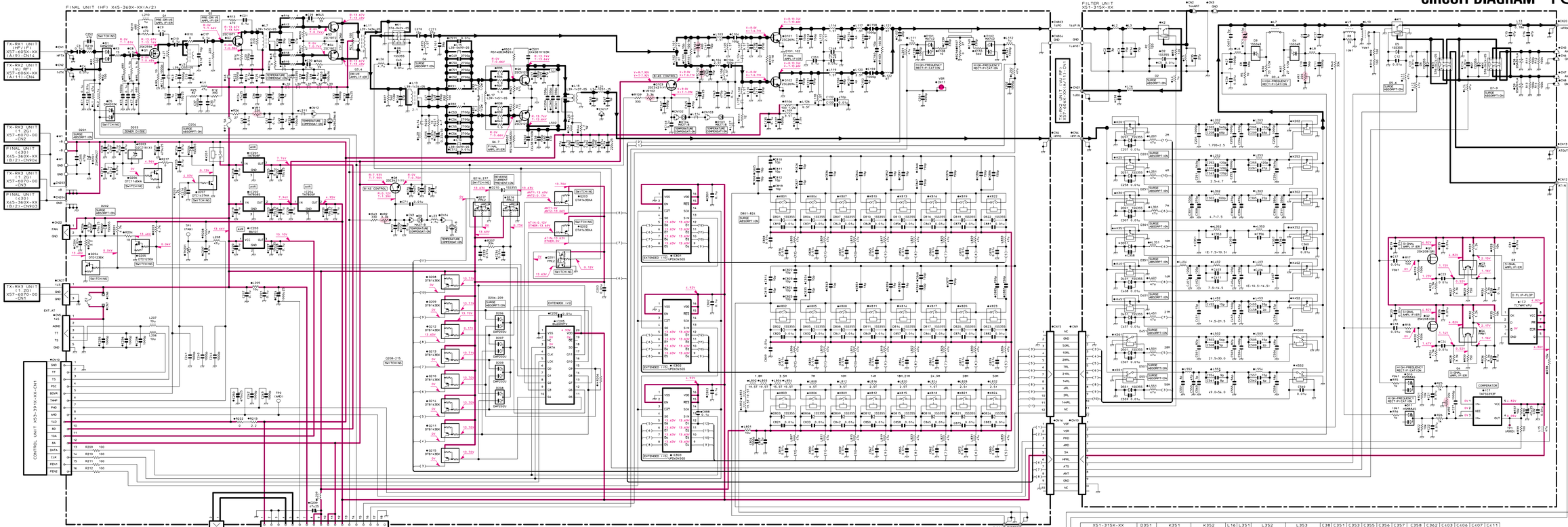

X45-360X-XX	R206
0-1)TS-2000/X	K 10
2-7)TS-2000	E,E2 NO

X51-315X-XX	D351	K351	K352	L16	L351	L352	L353	C81	C351	C353	C355	C356	C357	C358	C362	C403	C406	C407	C411
0-00)TS-2000/X	K	NO	NO	NO	NO	NO	NO	NO	NO	NO	NO	NO	NO	NO	NO	100p	39p	33p	10p
2-71)TS-2000	E,E2	1SS355	S76-0423-05	S76-0423-05	27n	47u	L39-1221-05	L39-1221-05	33p	82p	47p	470p	100p	120p	0.01u	120p	56p	27p	82p	NO

D1	:DAN235E	D101,102	:MA742	Q1	:2SK2596	Q201,216,217	:FMC2
D2	:MA2C029W-B	D201	:ZSM5MA27	Q2	:2SC1971	Q202,203	:DTA143EKA
D3,6,202,204, 210,801-824	:1SS355	D203	:02CZ18(X)	Q3,4	:2SC1972	Q204,205	:DTD123EK
D5	:DAN202K	D206-209	:DAP202U	Q6,7	:2SC5125	Q206	:DTC114EKA
D7,8,103,104	:MA27-B			Q8,103	:2SC3421(Y)	Q207	:DTC143TKA
				Q101,102	:2SC2694	Q208-215	:DTB143EK

IC201	:TA7808F	IC801-803	:UPD6345GS	D2,5-7,201,251, 301-351,401, 451,501,551	:1SS355	D3,4	:1SS346
IC202	:TA7808S					D8,9	:DSA3011A
IC203	:BA10T					D10,11	:HSM88AS
IC204	:TA7805F						
IC205	:BU209FV						

Q1,2	:2SK208(GR)	IC1	:TA75S393F
Q3,4	:FMW1	IC2	:TC7WH74FU

FIANL UNIT (X45-360X-XX) (B/2) 0-11 : K,KX 2-71 : E,E2 Component side view

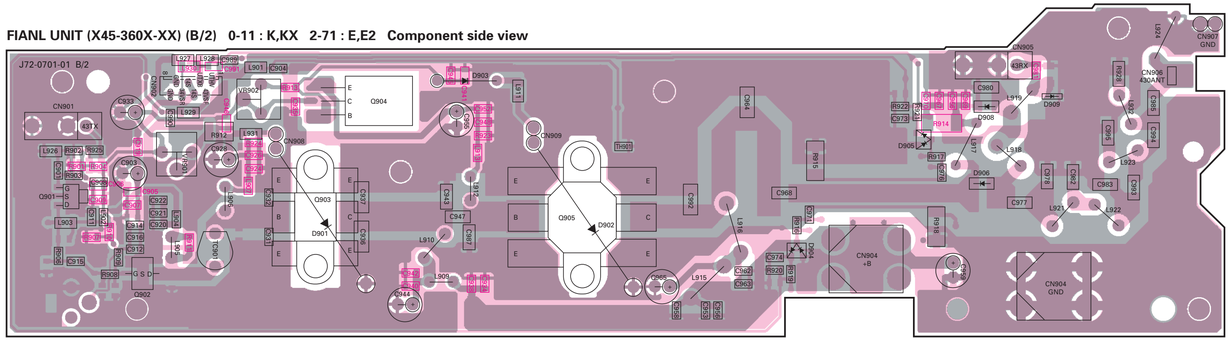

FIANL UNIT (X45-360X-XX) (B/2) 0-11 : K,KX 2-71 : E,E2 Foil side view

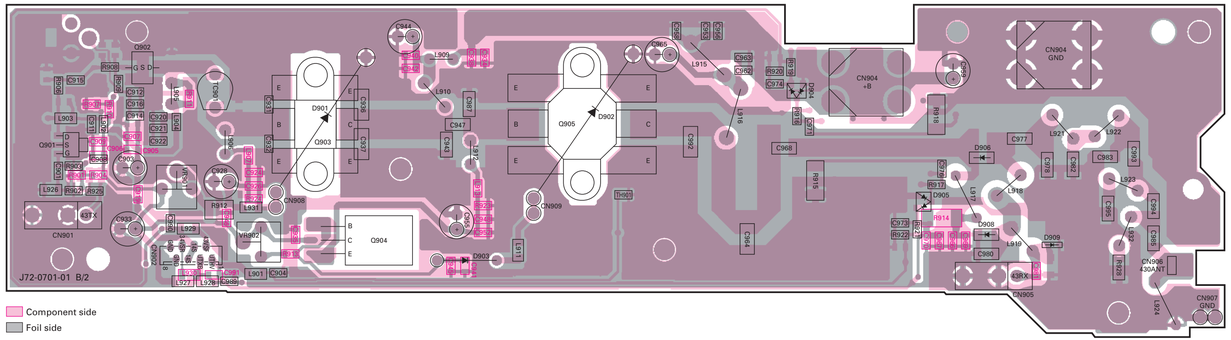

Component side
Foil side

TX-RX3 UNIT (1.2G) X57-6070-00 -CN3
TX-RX3 UNIT (1.2G) X57-6070-00 -CN2
FINAL UNIT (HF) X45-360X-XX (A/2) -CN204
FINAL UNIT (HF) X45-360X-XX (A/2) -CN203

FINAL UNIT (430) (X45-360X-XX) (B/2) 0-11:TS-2000/X (K) 2-71:TS-2000 (E,E2)

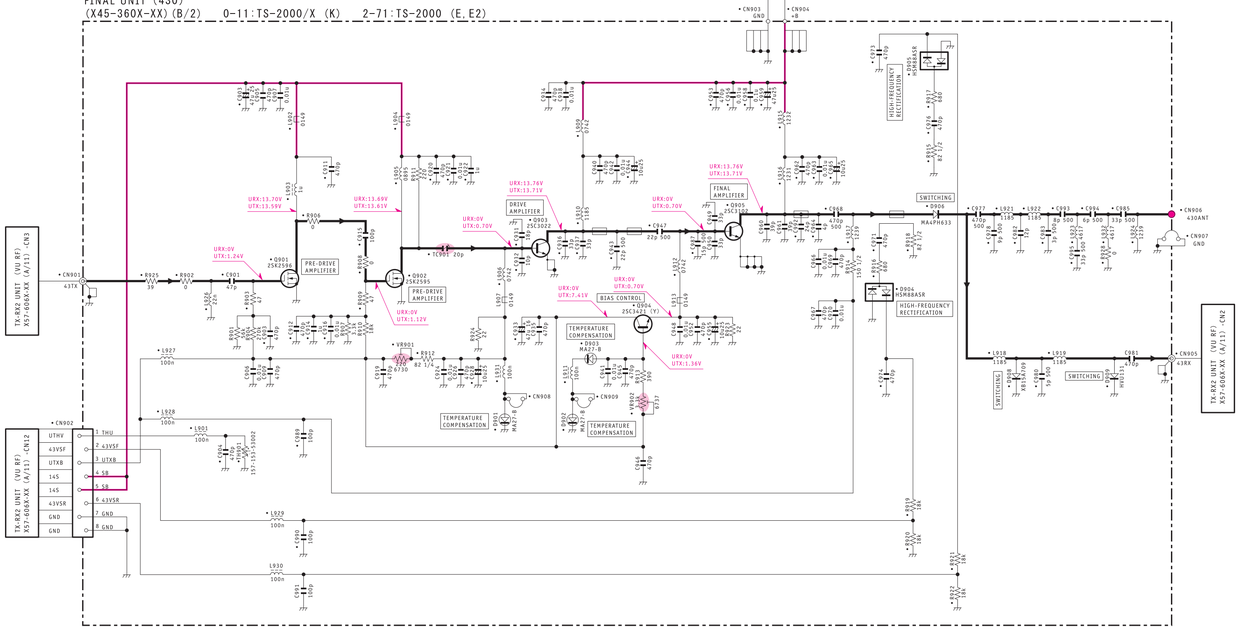

D901,902,903	:MA27-B	Q901	:2SK2596
D904,905	:HSM88ASR	Q902	:2SK2595
D906	:MA4PH633	Q903	:2SC3022
D908	:XB15A709	Q904	:2SC3421(Y)
D909	:HVU131	Q905	:2SC3102

DISPLAY UNIT (X54-3320-00) Component side view

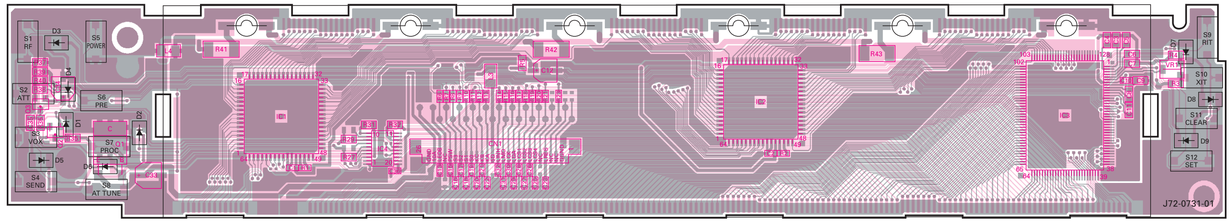

DISPLAY UNIT (X54-3320-00) Foil side view

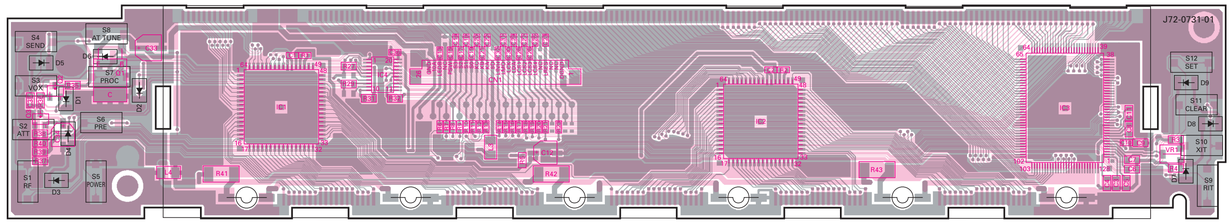

DISPLAY UNIT X54-3320-00

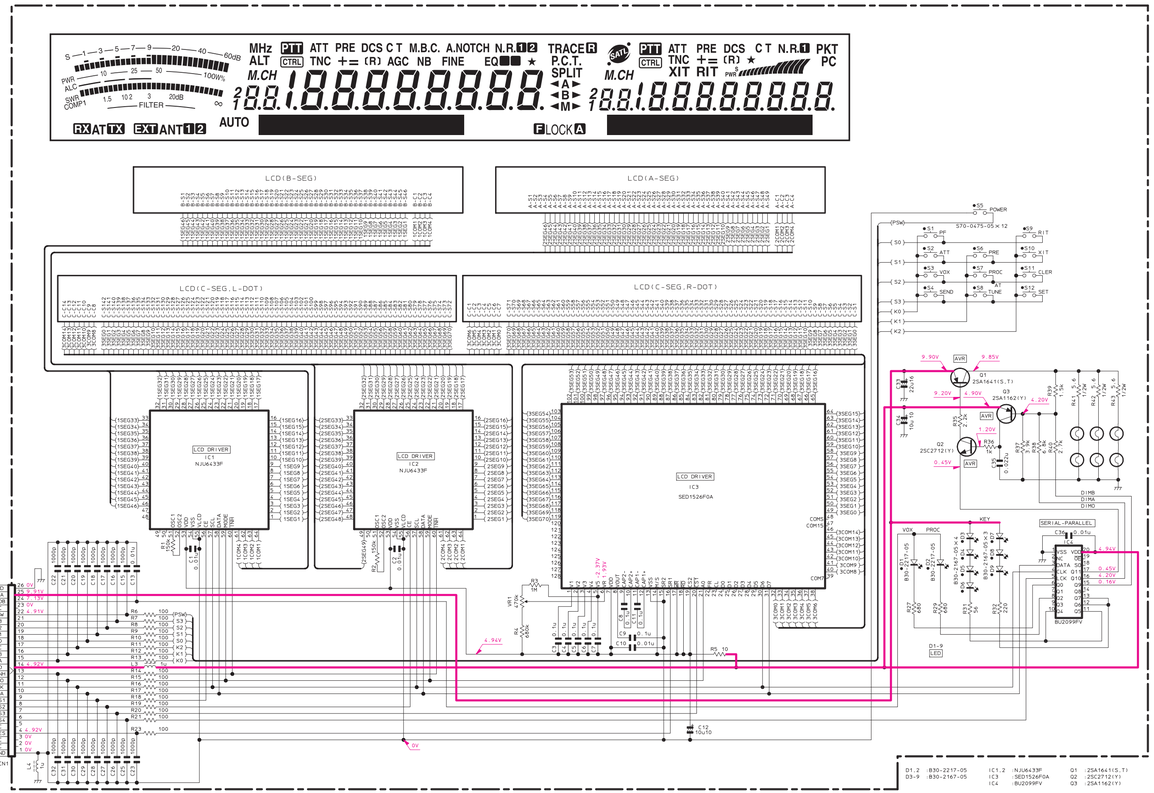

TS-2000/X PC BOARD VIEW

CONTROL UNIT (X53-391X-XX) 0-11 : K,KX 2-71 : E 2-72 : E2 Component side view

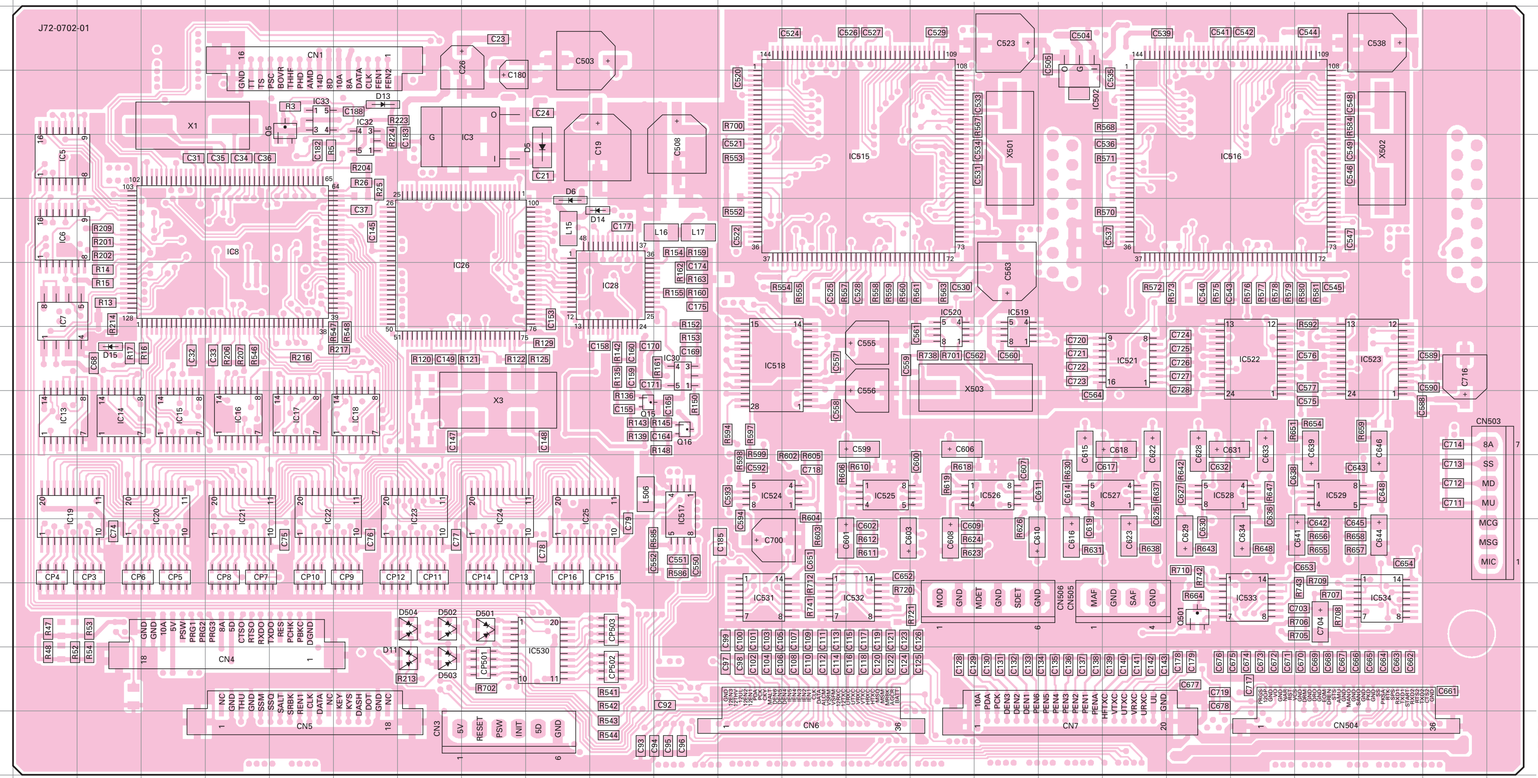

CONTROL UNIT (X53-391X-XX) 0-11 : K,KX 2-71 : E 2-72 : E2 Foil side view

Ref No.	Address
IC1	4W
IC2	2S
IC4	4T
IC9	6U
IC10	5U
IC11	7U
IC12	5X
IC27	7S
IC29	9S
IC31	8T
IC501	4R
IC503	3F
IC504	3N
IC505	5O
IC506	5M
IC507	5P
IC508	3I
IC509	5J
IC510	4K
IC511	3K
IC512	5I
IC513	3L
IC514	5H
IC535	11F
Q1	4X
Q2	3Y
Q3	4Y
Q4	3Y
Q9	6Z
Q10	6Z
Q13	8S
Q14	7R
Q17	11W
Q18	12Y
Q19	6Y
Q20	11Z
D12	11Y
D16	11Z
D17	10Z

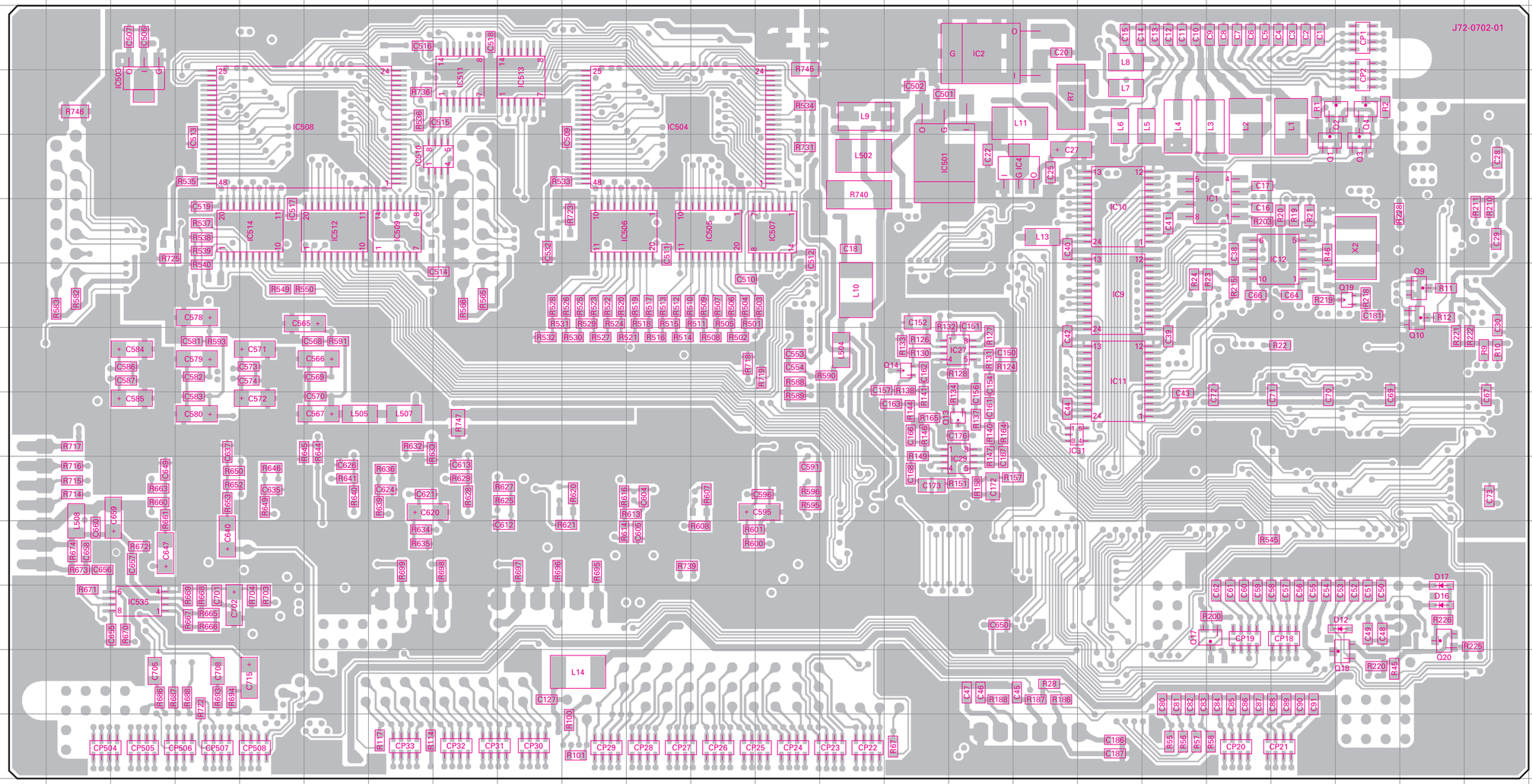

TS-2000/X PC BOARD VIEW

CONTROL UNIT (X53-391X-XX) 0-11 : K,KX 2-71 : E 2-72 : E2 Component side view + Foil side

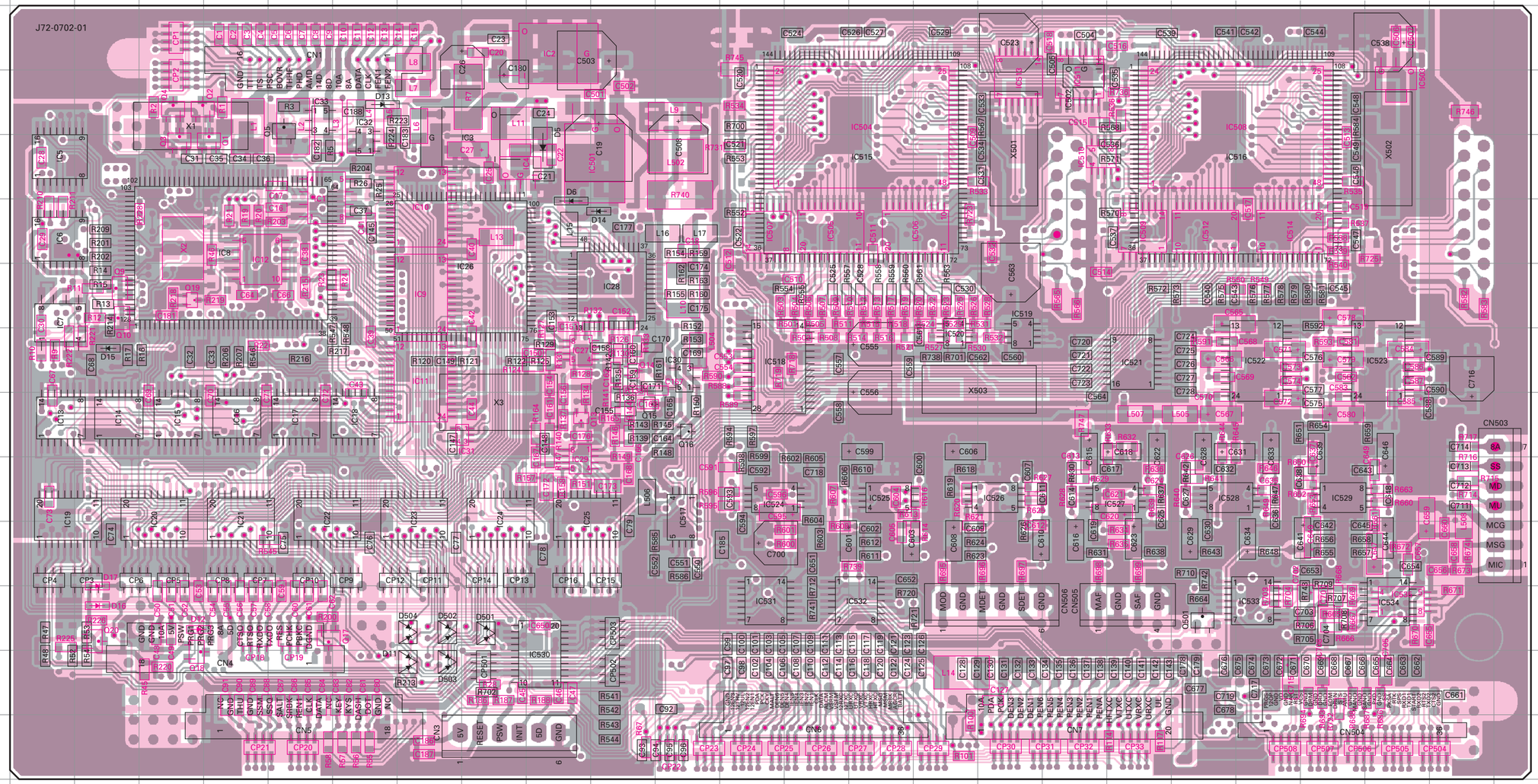

Ref No.	Address	Ref No.	Address	Ref No.	Address
IC1	4G	IC501	4L	IC534	11X
IC2	2L	IC502	3S	IC535	11X
IC3	4J	IC503	3X	Q1	4F
IC4	4J	IC504	3P	Q2	3E
IC5	4C	IC505	5O	Q3	4E
IC6	5C	IC506	5Q	Q4	3E
IC7	6C	IC507	5N	Q5	3G
IC8	5F	IC508	3V	Q9	6D
IC9	6I	IC509	5T	Q10	6D
IC10	5I	IC510	4S	Q13	8K
IC11	7I	IC511	3S	Q14	7L
IC12	5F	IC512	5U	Q15	8L
IC13	8C	IC513	3R	Q16	8M
IC14	8D	IC514	5V	Q17	11G
IC15	8E	IC515	4P	Q18	12E
IC16	8F	IC516	4V	Q19	6E
IC17	8G	IC517	9M	Q20	11D
IC18	8H	IC518	7N	Q501	11U
IC19	9C	IC519	7R	D5	4K
IC20	9E	IC520	7Q	D6	5K
IC21	9F	IC521	7T	D11	12I
IC22	9G	IC522	7V	D12	11E
IC23	9I	IC523	7X	D13	3H
IC24	9J	IC524	9N	D14	5L
IC25	9K	IC525	9P	D15	7D
IC26	6J	IC526	9R	D16	11D
IC27	7K	IC527	9T	D17	10D
IC28	6L	IC528	9U	D501	11J
IC29	9K	IC529	9W	D502	11I
IC30	7M	IC530	12K	D503	12I
IC31	8J	IC531	11N	D504	11I
IC32	4H	IC532	11P		
IC33	3G	IC533	11V		

TS-2000/X CIRCUIT DIAGRAM

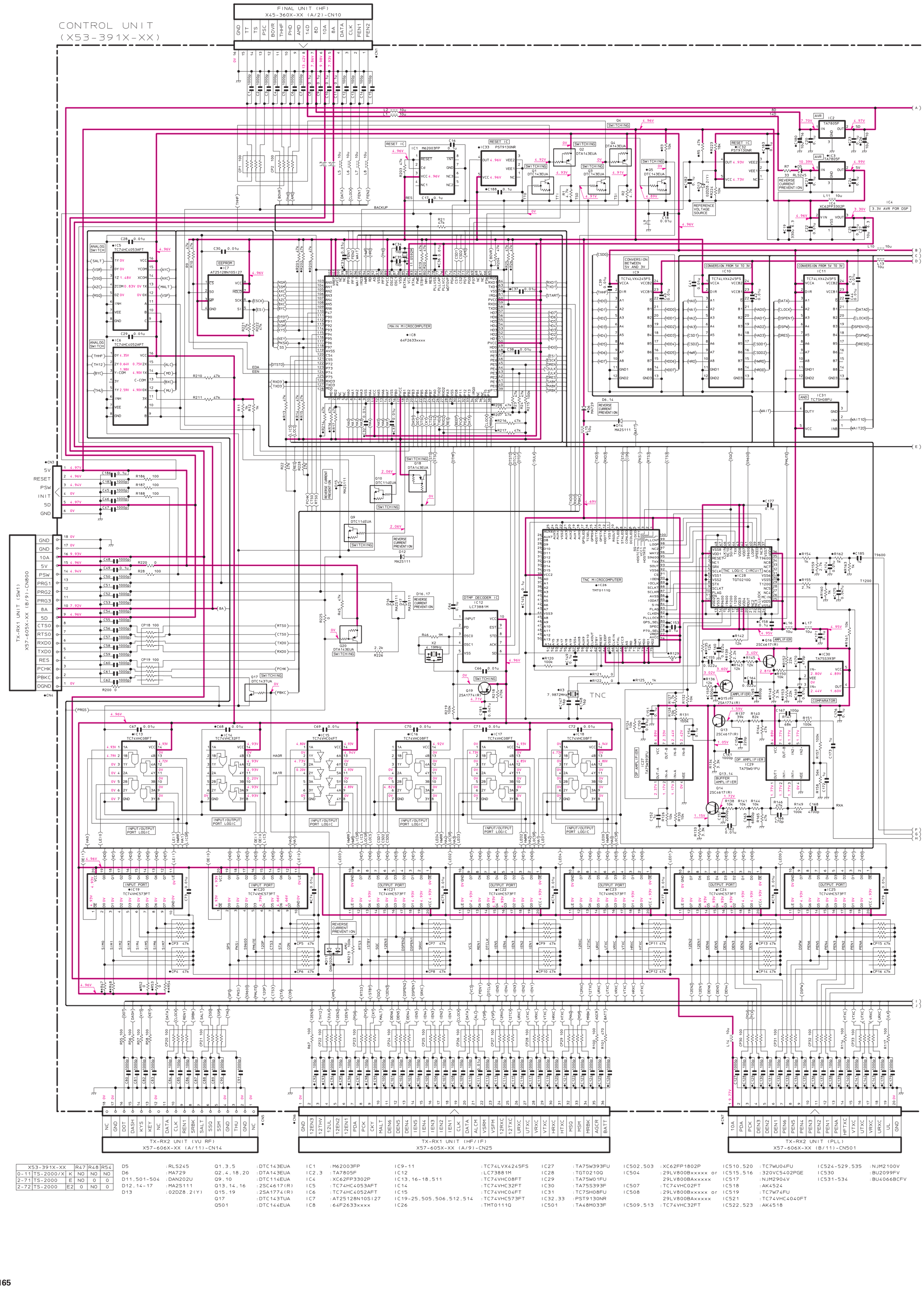

X53-391X-XX		R47	R48	R54
0-11	TS-2000/X	K	NO	NO	NO
2-71	TS-2000	E	NO	0	0
2-72	TS-2000	E2	0	NO	0

D5	:RLS245	Q1,3,5	:DTC143EUA	IC1	:M62003FP	IC9-11	:TC74LVX4245FS	IC27	:TA75W393FU
D6	:MA729	Q2,4,18,20	:DTA143EUA	IC2,3	:TA7805F	IC12	:LC73881M	IC28	:TGT0210Q
D11,501-504	:DAN202U	Q9,10	:DTC114EUA	IC4	:XC62FP3302P	IC13,16-18,511	:TC74VHC08FT	IC29	:TA75W01FU
D12,14-17	:MA2S111	Q13,14,16	:2SC4617(R)	IC5	:TC74HC4053AFT	IC14	:TC74VHC32FT	IC30	:TA75S393F
D13	:02DZ8.2(Y)	Q15,19	:2SA1774(R)	IC6	:TC74HC4052AFT	IC15	:TC74VHC04FT	IC31	:TC7SH08FU
		Q17	:DTC143TUA	IC7	:AT25128N10SI27	IC19-25,505,506,512,514	:TC74VHC573FT	IC32,33	:PST9130NR
		Q501	:DTC144EUA	IC8	:64F2633xxxx	IC26	:TMT0111Q	IC501	:TA48M033F

IC502,503	:XC62FP1802P	IC510,520	:TC7WU04FU	IC524-529,535	:NJM2100V
IC504	:29LV800Bxxxxx or 29LV800BAxxxxx	IC515,516	:320VC5402PGE	IC530	:BU2099FV
IC507	:TC74VHC02FT	IC517	:NJM2904V	IC531-534	:BU4066BCFV
IC508	:29LV800Bxxxxx or 29LV800BAxxxxx	IC518	:AK4524		
IC509,513	:TC74VHC32FT	IC519	:TC7W74FU		
		IC521	:TC74VHC4040FT		
		IC522,523	:AK4518		

Note : Components marked with a dot (·) are parts of pattern 1.

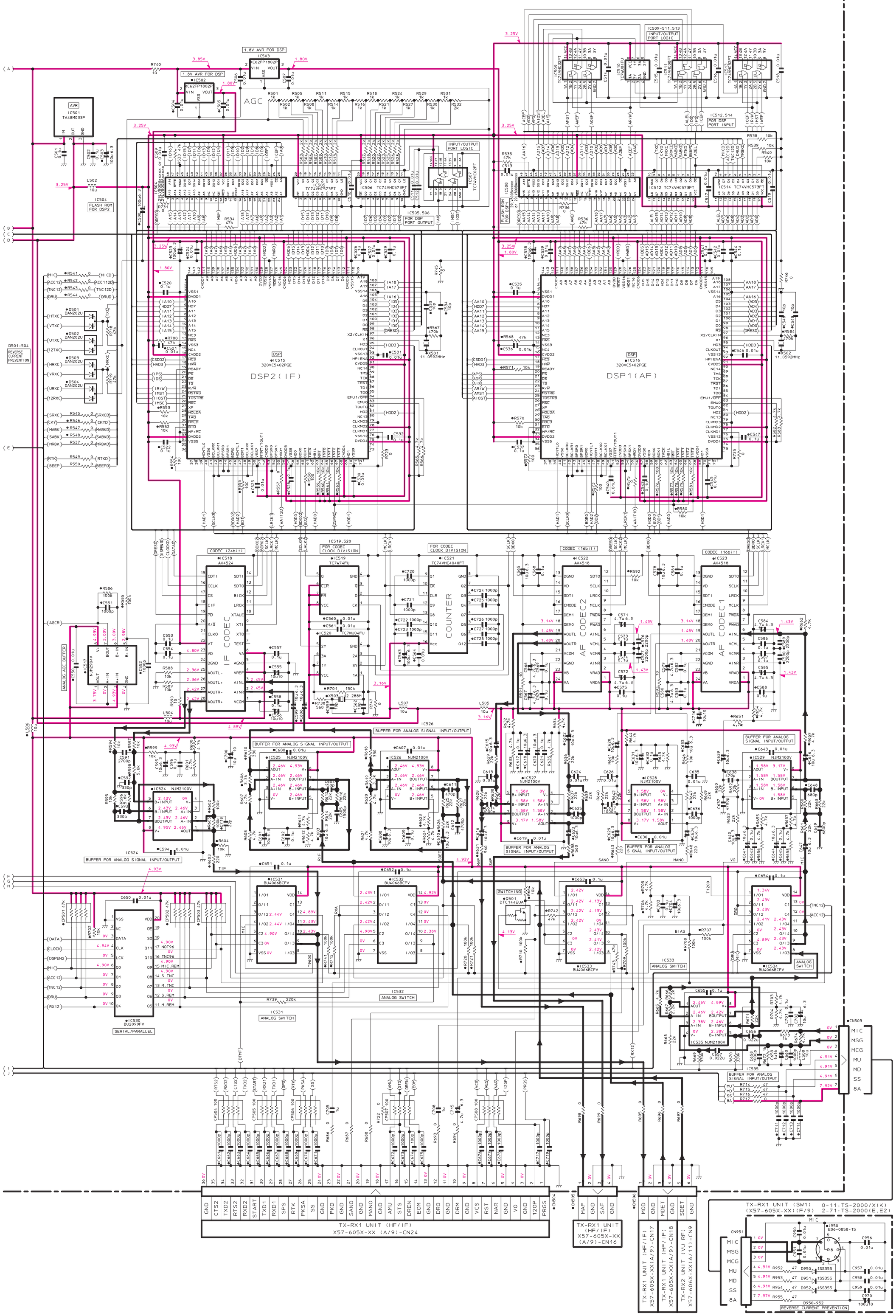

TS-2000/X CIRCUIT DIAGRAM

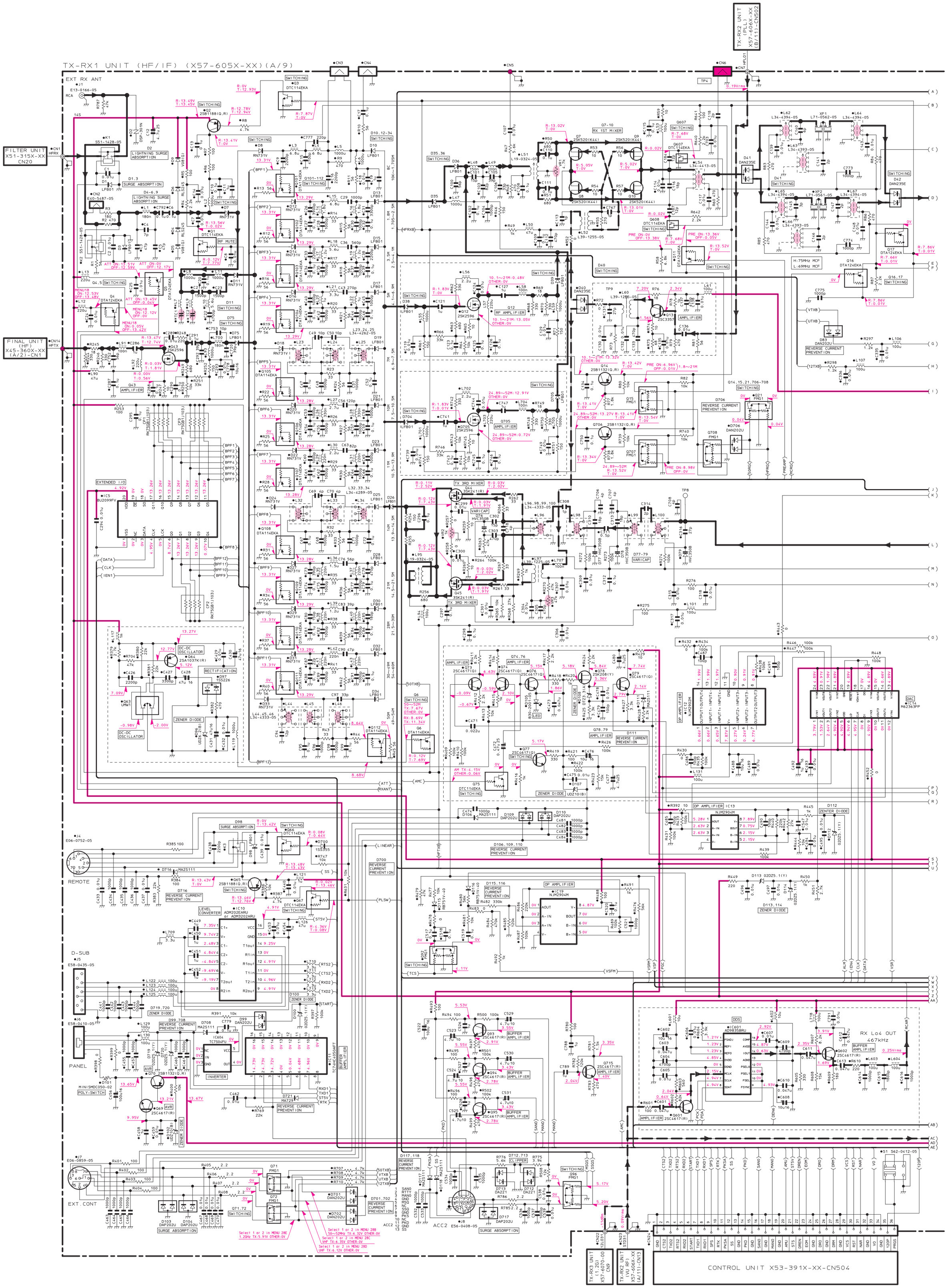

D1,3,10,13,15,17,19,21,23,25,26,28, 30,32,34-36,38,39,75,98,704,705	:LFB01	D70,71,103,104,109,110,717	:DAP202U	D700	:1SS355	Q1,3,40,60,66,67,75,607,608,702,703	:DTC114EKA	Q26,58,63	:UMW1
D2	:DSP-301N	D76-79,91,703,715	:HVC350B	D707	:MA742	Q2,65,80,82,83,85,86,88,89,91	:2SB1188(Q,R)	Q28,30,73,74,76,77,79,709	:2SC4617(Q)
D4,6	:RLS245	D82,84	:RN739D	D709	:DTZ3.9(B)	Q4,5,11,16,17,34	:DTA124EKA	Q37,51,53	:UMC2N
D5,9	:V08(G)	D86,105	:B30-2001-05	D712,713	:DA221	Q6,31,57,101-112,713	:DTA114EKA	Q44,45	:3SK241(R)
D7,8,11,12,14,16,18,20,22,24,27,29,31,33	:RN731V	D96	:UDZ6.2(B)	D714	:MA2S077	Q7-10	:2SK520(K44)	Q64	:2SA1037K(R)
D40,41,42,45,46,80,90	:DAN235E	D97	:1SS226	D721	:MA729	Q12,43,705	:2SK2596	Q78	:2SK208(Y)
D47,49,50,52,53,55-58,60-62,64,81	:HSC277	D100,112-114,719,720	:02DZ5.1(Y)			Q13	:2SC3357	Q97	:2SD1624(S)
D48,65,83,92-95,99,701,702,706	:DAN202U	D101	:MINISMDC050-02			Q14,70,706	:2SB1132(Q,R)	Q609,704,712,714	:DTC124EKA
D66	:RB706F-40	D102,107	:UDZ10(B)			Q15,21,33,71,72,81,84,87,90,92,96,707,708	:FMG1	Q710	:2SC4617(S)
D67-69,73,85,87-89,106,111,117,118, 708,710,711,716	:MA2S111	D108	:DTZ3.3(A)			Q18,25,38,46,47,49,700,701	:3SK131(M)		
		D115,116,119-124	:RB751V-40			Q19,20	:2SK520(K43)		
		D130	:XB15A204			Q22,27,29,32,41,42,48,52,54,59,61,62,69, 93-95,601-606,711,715	:2SC4617(R)		

CIRCUIT DIAGRAM TS-2000/X

Note : Components marked with a dot (·) are parts of pattern 1.

IC1 : TA31136FN
IC2,4,13,19 : NJM2904M
IC3 : TC74HC4053AFT
IC5,16,17 : BU2099FV
IC6 : TA4101F
IC7 : TC4W53FU
IC8 : BU4066BCFV
IC9 : LA4446
IC10 : ADM202EARU or ADM3202ARU0
IC11 : TC74HC4050AFT
IC12 : NJM2902M
IC14 : M62363FP
IC15 : M62364FP
IC18 : NJM5532M
IC601-603 : AD9835BRU
IC604 : TC7S04FU
IC605 : NJM78L08UA

X57-605X-XX			TC1	TC2	L7	L9
0-11	TS-2000/X	K	NO	NO	NO	NO
2-71	TS-2000	E,E2	C05-0344-05	C05-0344-05	6.8u	6.8u

TX-RX 1 UNIT (X57-605X-XX) (A/9) 0-11 : K,KX 2-71 : E,E2
Component side view

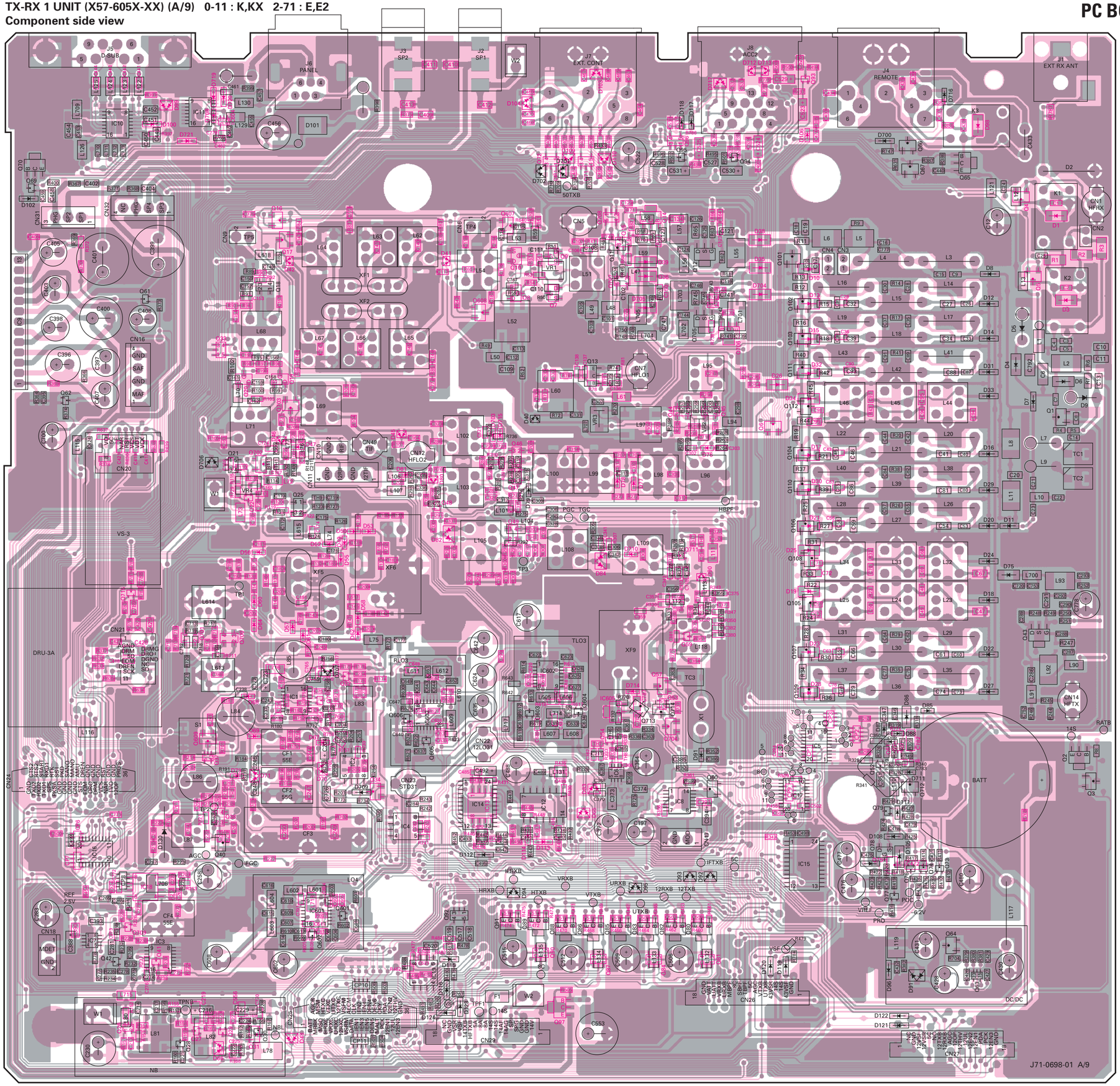

Component side
Foil side

TS-2000/X PC BOARD VIEW

TX-RX 1 UNIT (X57-605X-XX) (A/9) 0-11 : K,KX 2-71 : E,E2
Foil side view

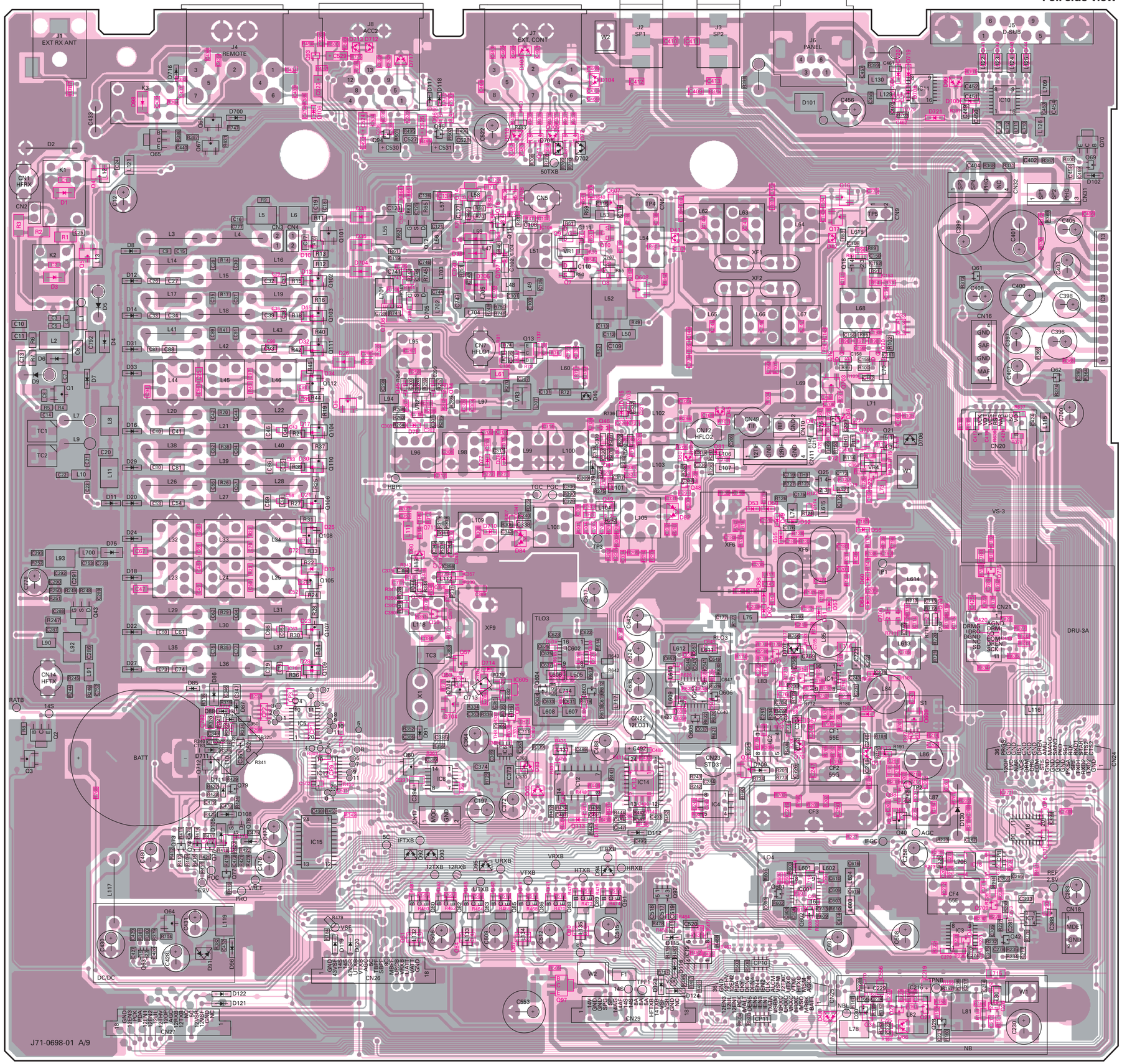

TX-RX 1 UNIT (X57-605X-XX) (B/9) 0-11 : K,KX 2-71 : E,E2 Component side view

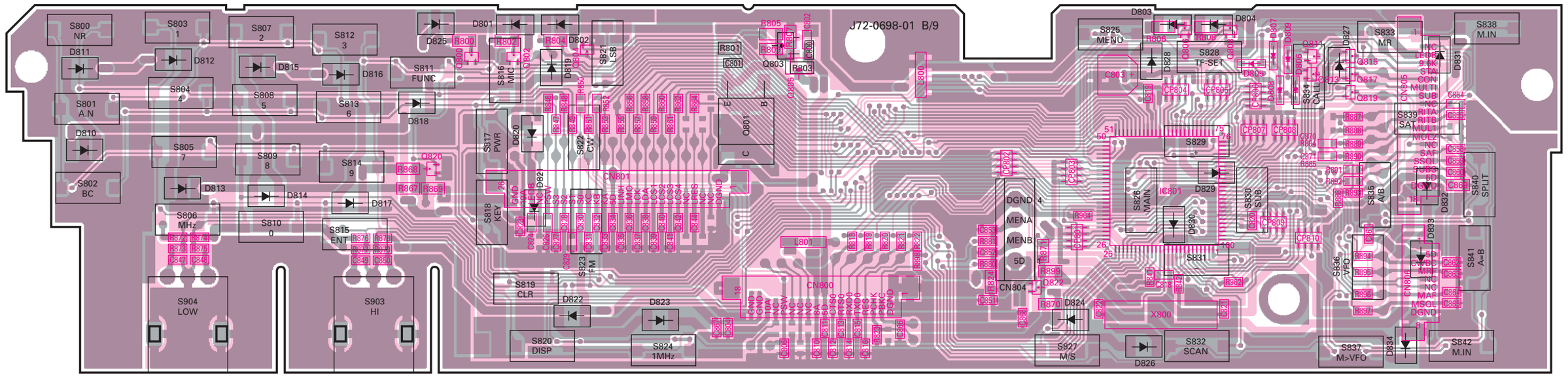

TX-RX 1 UNIT (X57-605X-XX) (B/9) 0-11 : K,KX 2-71 : E,E2 Foil side view

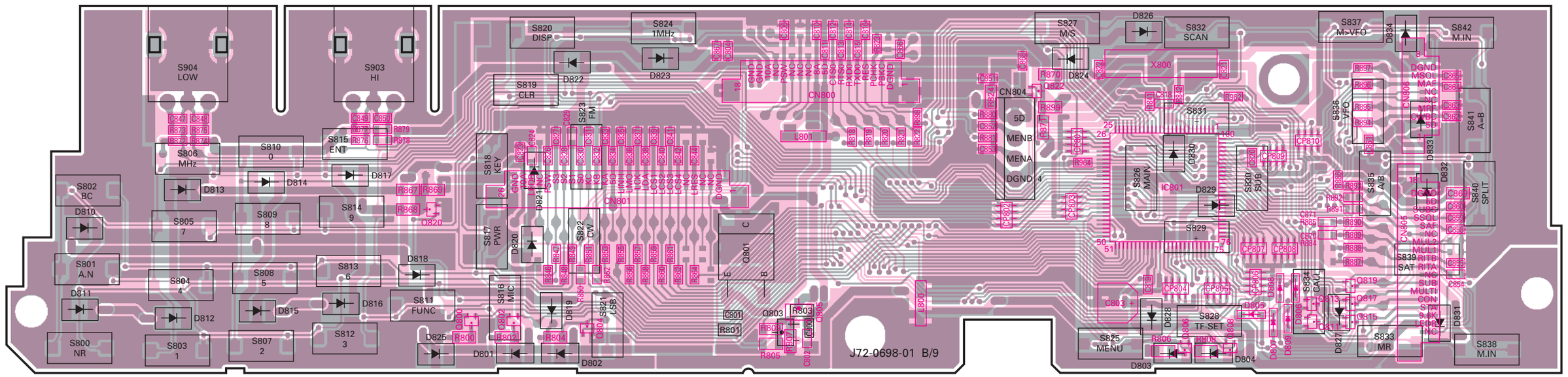

Component side
Foil side

TS-2000/X PC BOARD VIEWS

TX-RX 1 UNIT (X57-605X-XX) (C,D,E,F,G/9) 0-11 : K,KX 2-71 : E,E2

Component side view

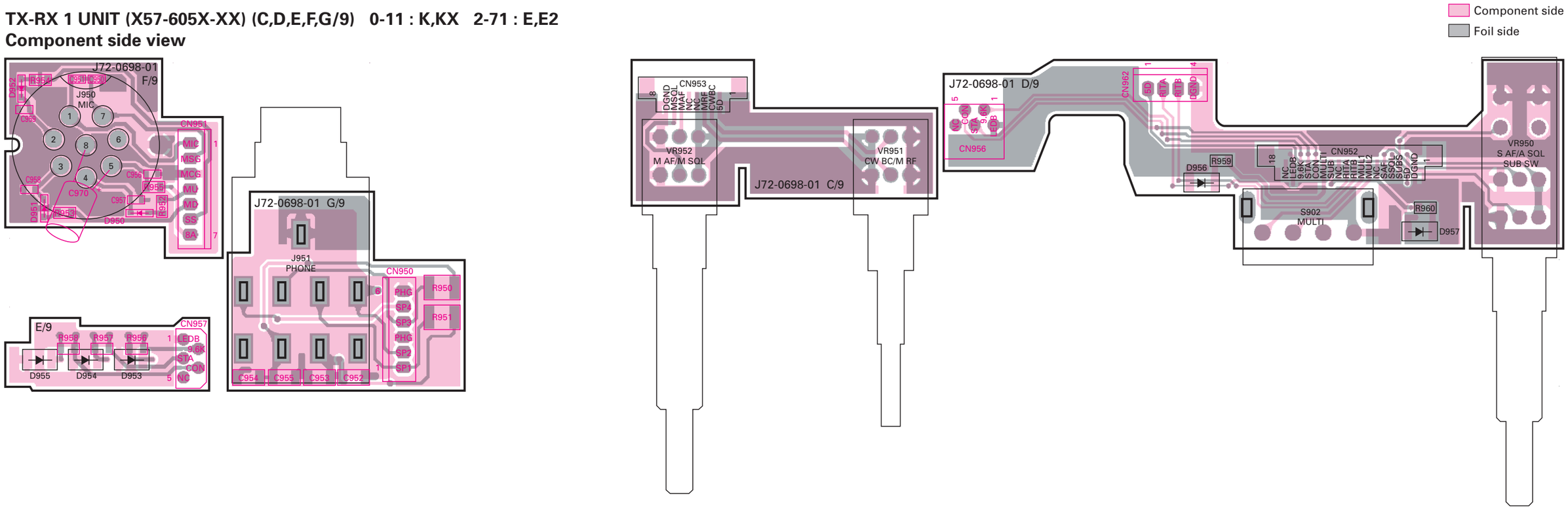

Foil side view

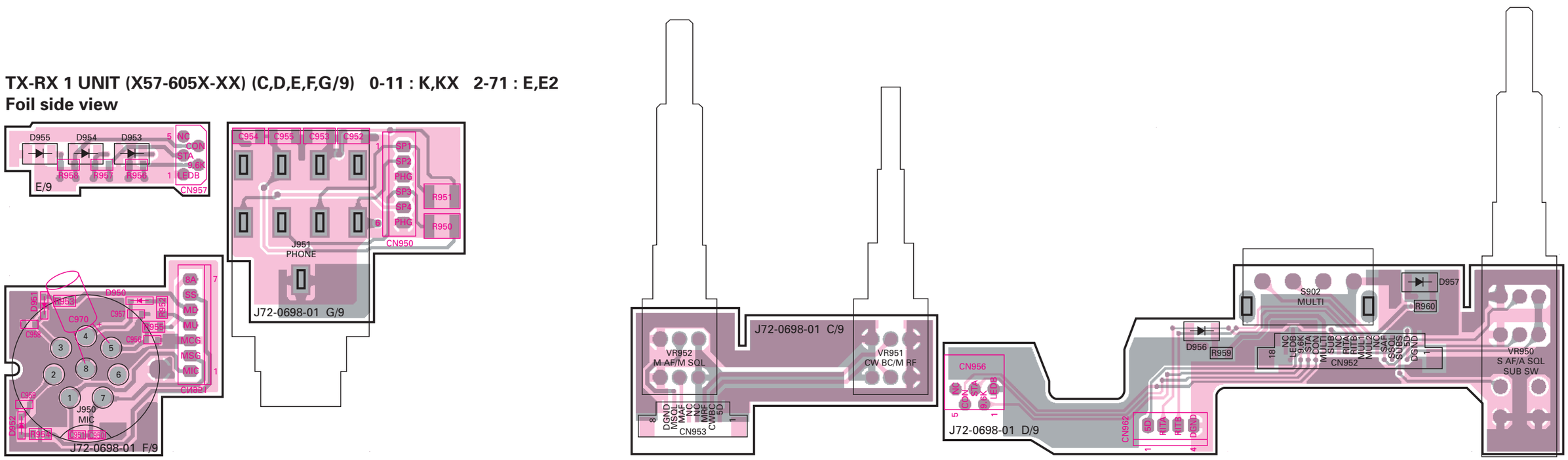

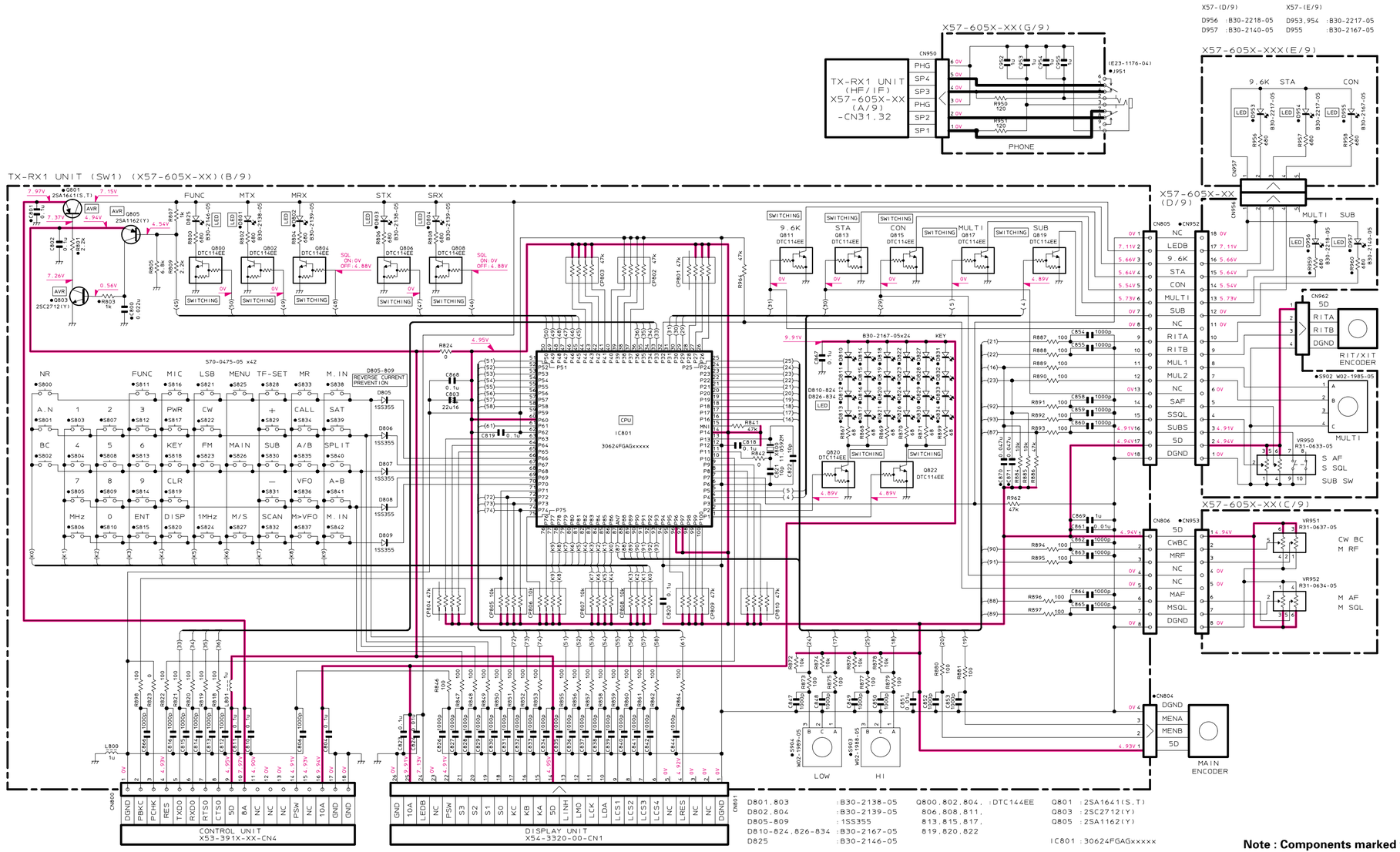

Note : Components marked with a dot (·) are parts of pattern 1.

TX-RX 2 UNIT (X57-606X-XX) (A/11) 0-11 : K,KX 2-71 : E,E2 Component side view

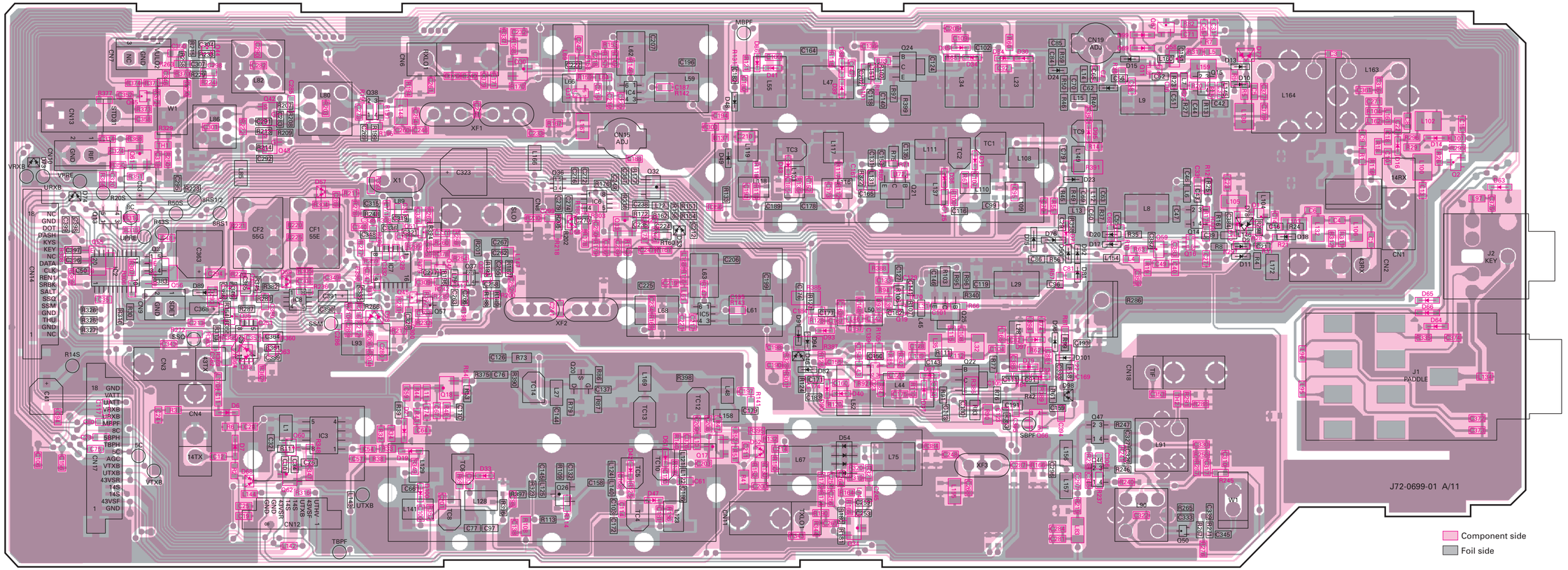

TX-RX 2 UNIT (X57-606X-XX) (A/11) 0-11 : K,KX 2-71 : E,E2 Foil side view

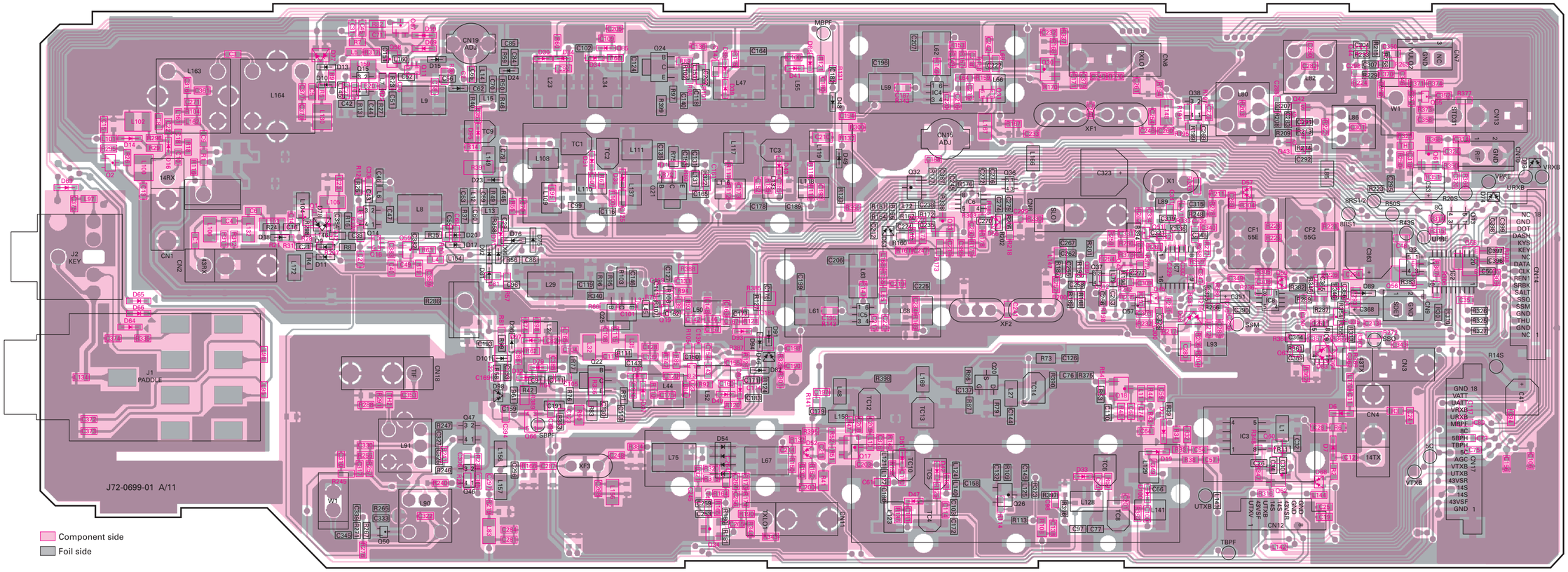

TS-2000/X PC BOARD VIEW

TX-RX 2 UNIT (X57-606X-XX) (B/11) 0-11 : K,KX 2-71 : E,E2 Component side view

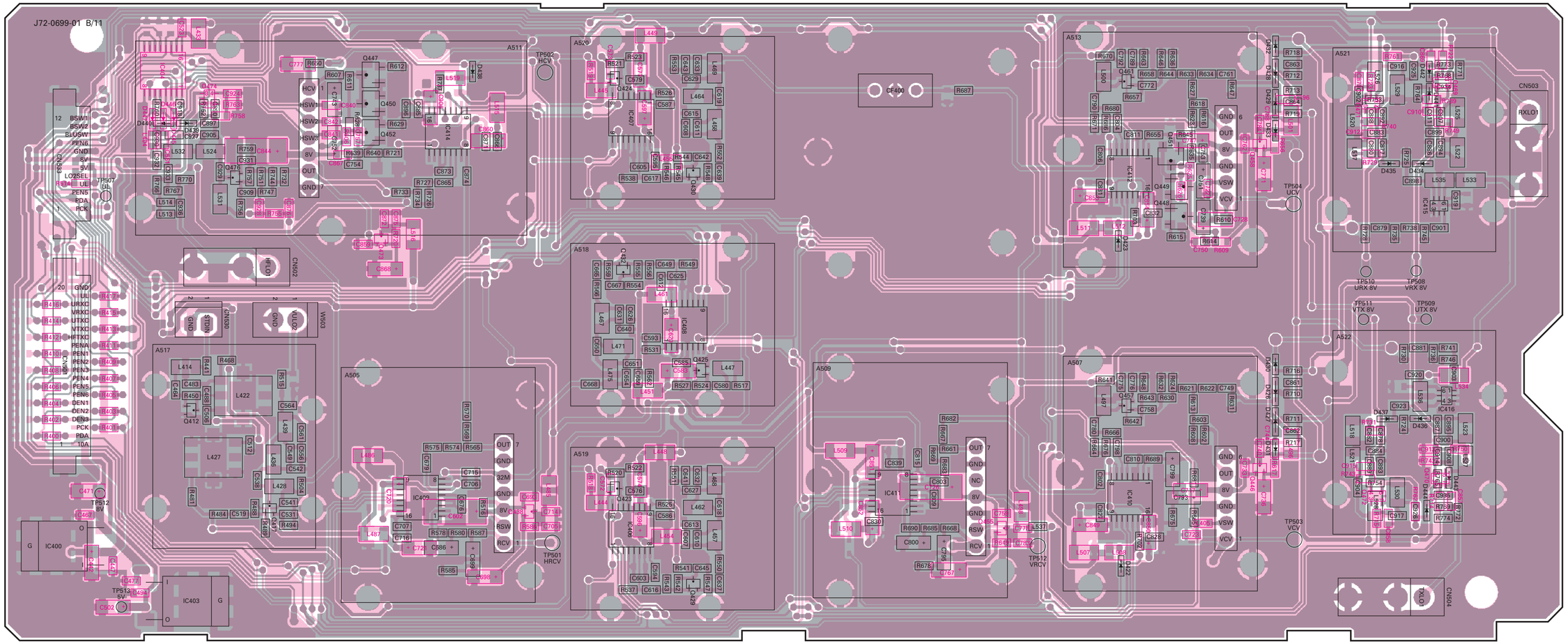

TX-RX 2 UNIT (X57-606X-XX) (B/11) 0-11 : K,KX 2-71 : E,E2 Foil side view

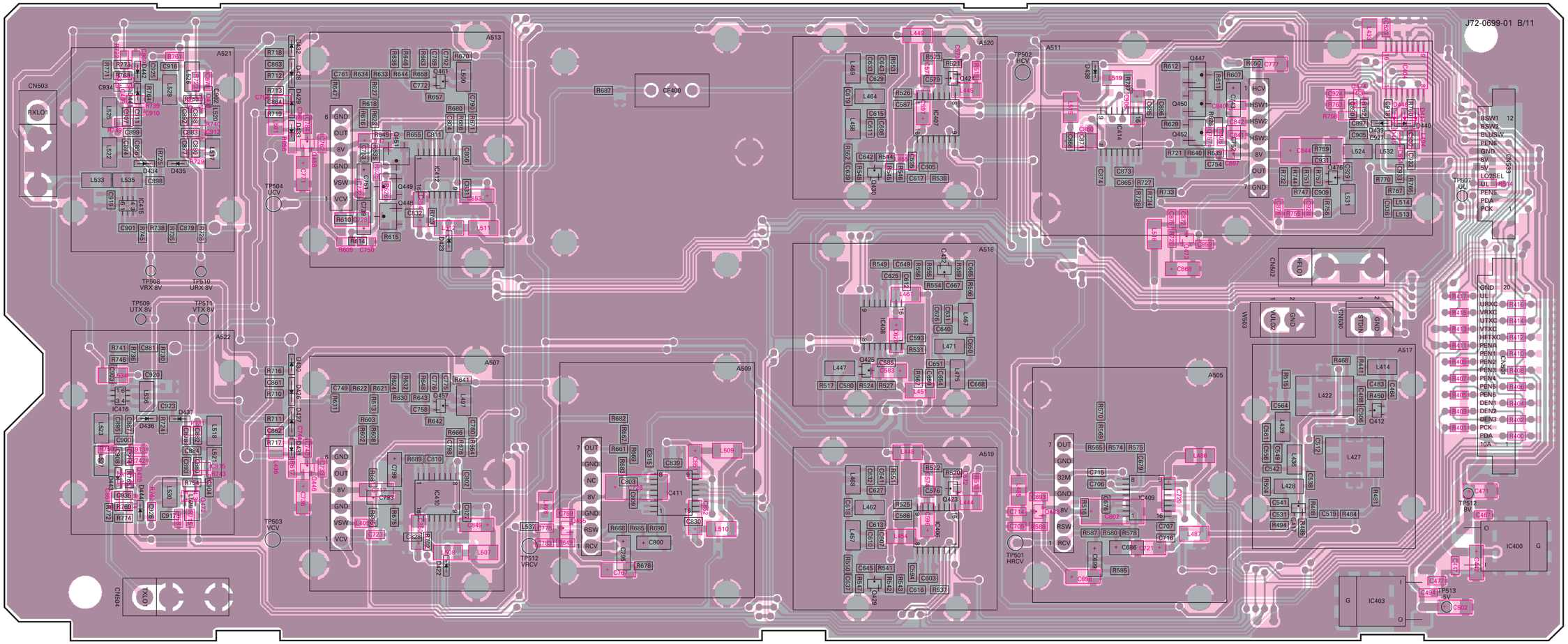

TS-2000/X PC BOARD VIEWS

TX-RX 2 UNIT (X57-606X-XX) (C,D,E,G,H,I,J,K/11) 0-11 : K,KX 2-71 : E,E2 Component side view

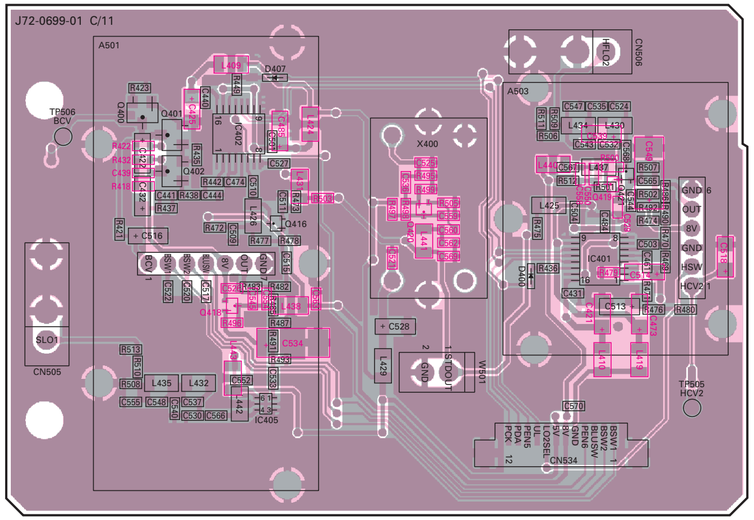

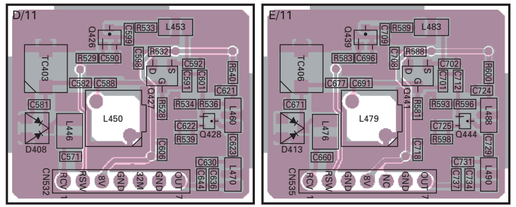

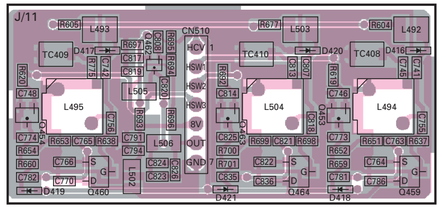

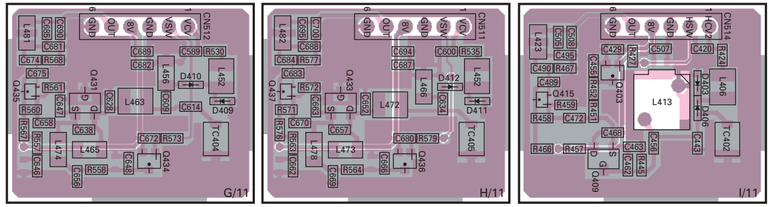

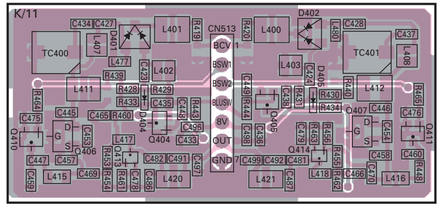

TX-RX 2 UNIT (X57-606X-XX) (C,D,E,G,H,I,J,K/11) 0-11 : K,KX 2-71 : E,E2 Foil side view

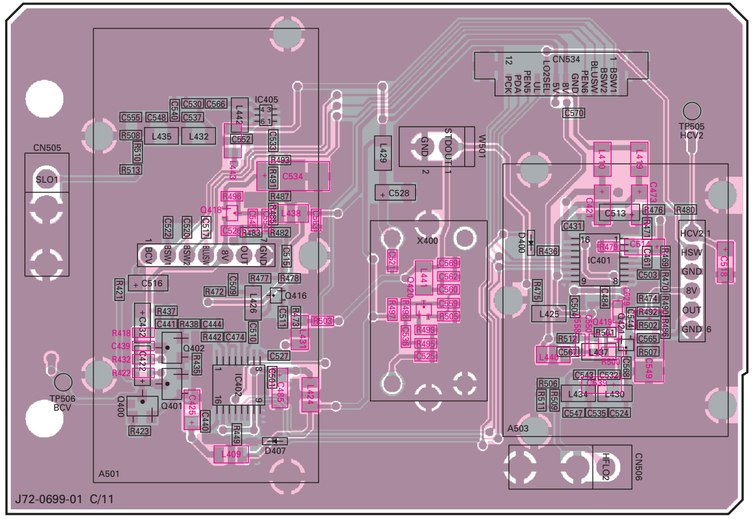

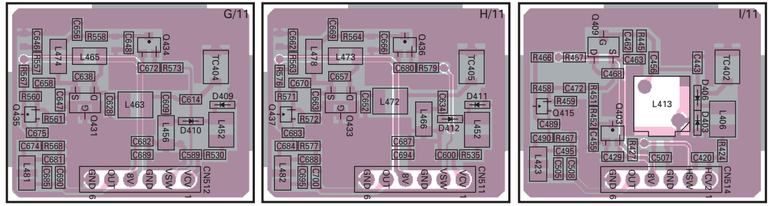

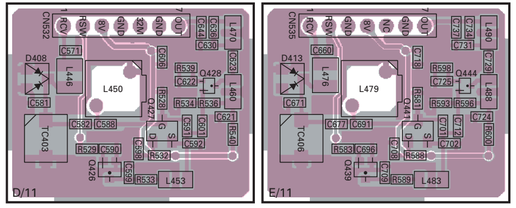

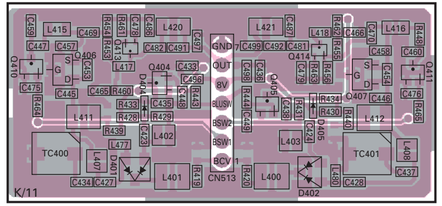

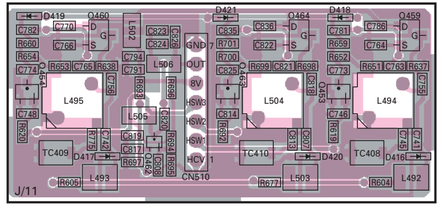

Component side
Foil side

Note : Components marked with a dot (·) are parts of pattern 1.

TX-RX2 UNIT (VU RF) (X57-606X-XX)(A/11)

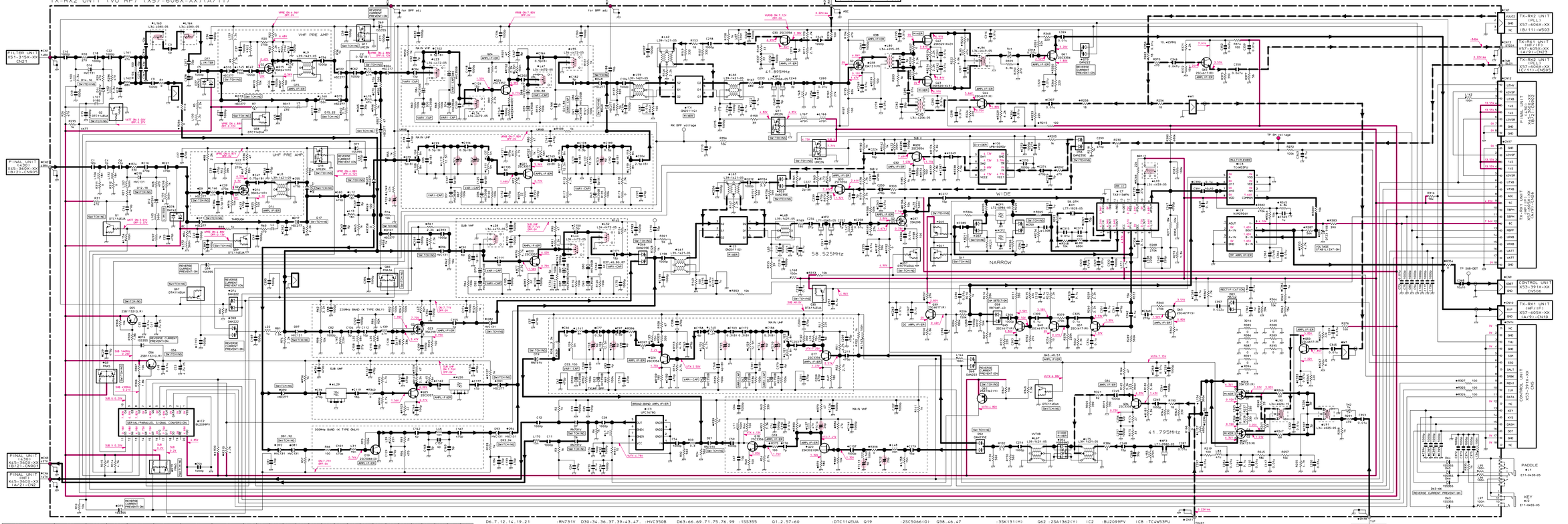

X57-606X-XX		CF2	D57	D59	Q40	Q41	L29	L50	R15	R30	R97	R211	R220	R221	R225	R226	R236	R304	R305	R350	R399	C8	C249	C289	C308	C387
0-11	TS-2000/X	K	NO	NO	NO	NO	L79-1575-05	L79-1575-05	4.7k	NO	15	NO	NO	NO	NO	NO	NO	0	0	0	6.8	22p	10p	NO	NO	18p
2-71	TS-2000	E,E2	L72-0986-05	DAN235E	DAN235E	DTA114EUA	DTC144EUA	L79-1574-05	15k	4.7k	12	15k	22k	22k	22k	22k	15k	NO	NO	10	10	12P	5p	0.1u	0.1u	47p

D6,7,12,14,19,21	:RN731V	D30-34,36,37,39-43,47	:HVC350B	D63-66,69,71,75,76,99	:1SS355	Q1,2,57-60	:DTC114EUA	Q19	:2SC5066(O)	Q38,46,47	:3SK131(M)	Q62	:2SA1362(Y)	IC2	:BU2099FV
D9-11,13,15,17,20,22-24	:HSC277	51,79,80,84-88,100		D68,73,74,98	:DAN222	Q3,13	:PMA5	Q20	:2SK302(GR)	Q39,44,45,48,50,51,65	:2SC4617(R)	Q63	:2SC4617(S)	IC3	:UPC1678G
D48,49,90,91,95,101		D46,52,53,56,57,59	:DAN235E	D77,78,83	:MA742	Q11,16,31,36	:UMC2N	Q21,22,24,25	:2SC3357	Q41	:DTC144EUA	Q66	:PMA1A	IC4,5	:GN2011(G)
D16,18,81,82,92-94,96,97	:HVC131	D54	:HSB88WS	D89	:DT23,9(B)	Q14,15	:3SK241(R)	Q23,37	:3SK298	Q42,43	:2SK5201(K43)			IC6	:UPB1509GV
		D58	:RB706F-40			Q17,18,26,30,32-34,61	:2SC3356	Q35,40,67	:DTA114EUA	Q55,56	:2SB1132(Q,R)			IC7	:TA31136FN

TS-2000/X CIRCUIT DIAGRAM

Note : Components marked with a dot (·) are parts of pattern 1.

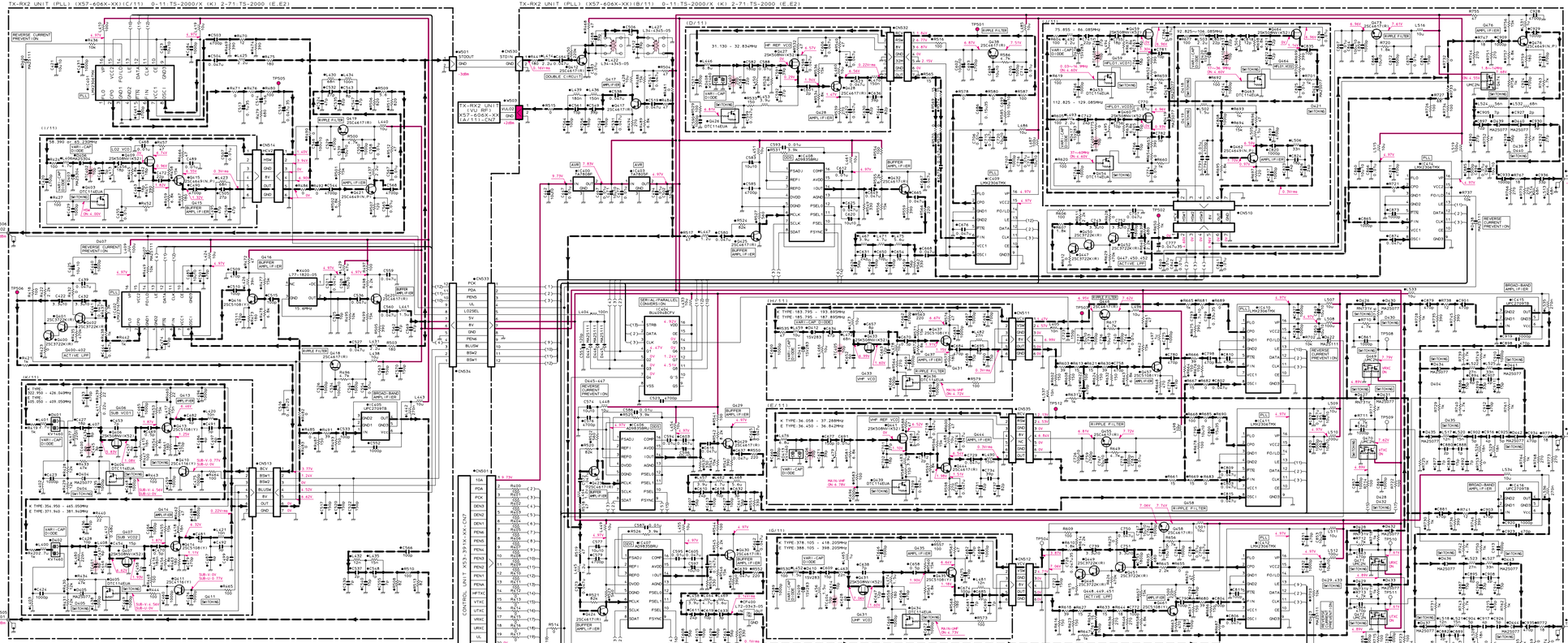

TX-RX 3 UNIT (X57-6070-00) Component side view : KX

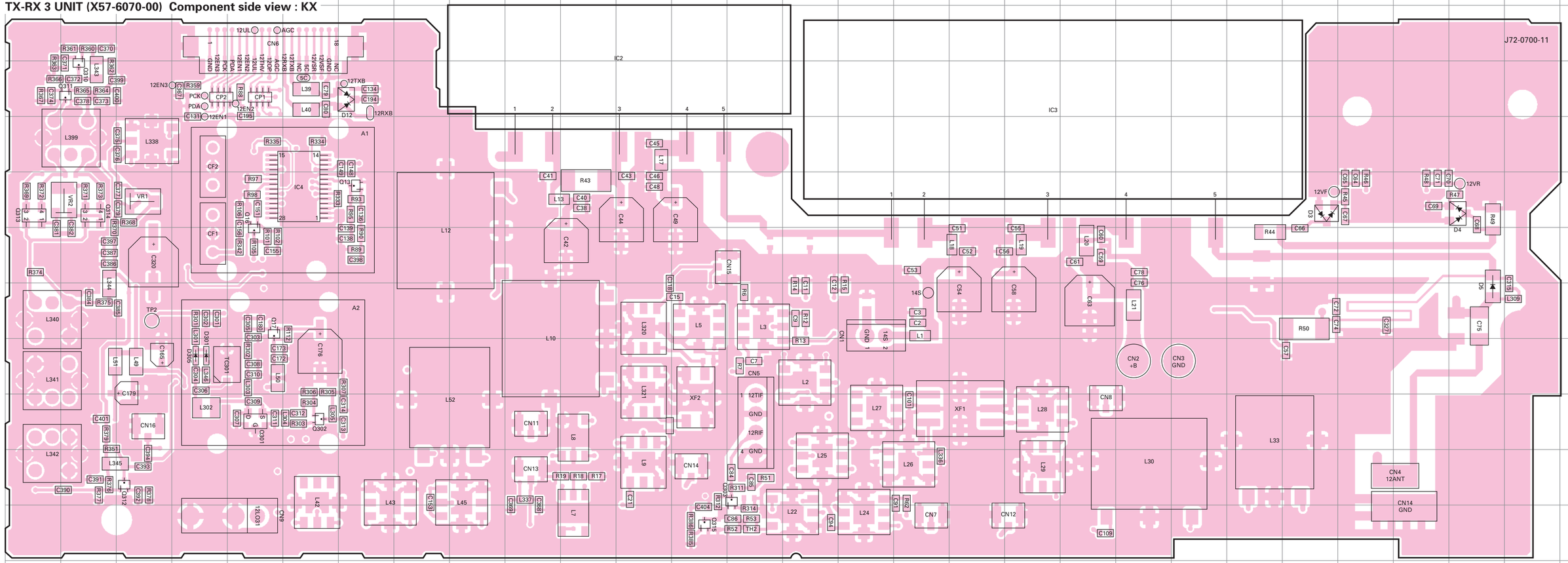

Ref No.	Address	Ref No.	Address	Ref No.	Address	Ref No.	Address	Ref No.	Address
IC2	2L	Q17	7E	Q311	3B	D3	5X	D301	8D
IC3	3S	Q301	9E	Q312	10C	D4	5AA		
IC4	5F	Q302	9F	Q313	5A	D5	7AA		
Q13	5G	Q303	10N	Q314	5B	D12	3G		
Q16	6E	Q310	3B	Q315	11M	D305	8D		

Component side
Pattern 1
Pattern 2
Pattern 3
Pattern 4
Foil side

TS-2000/X PC BOARD VIEW

TX-RX 3 UNIT (X57-6070-00) Foil side view : KX

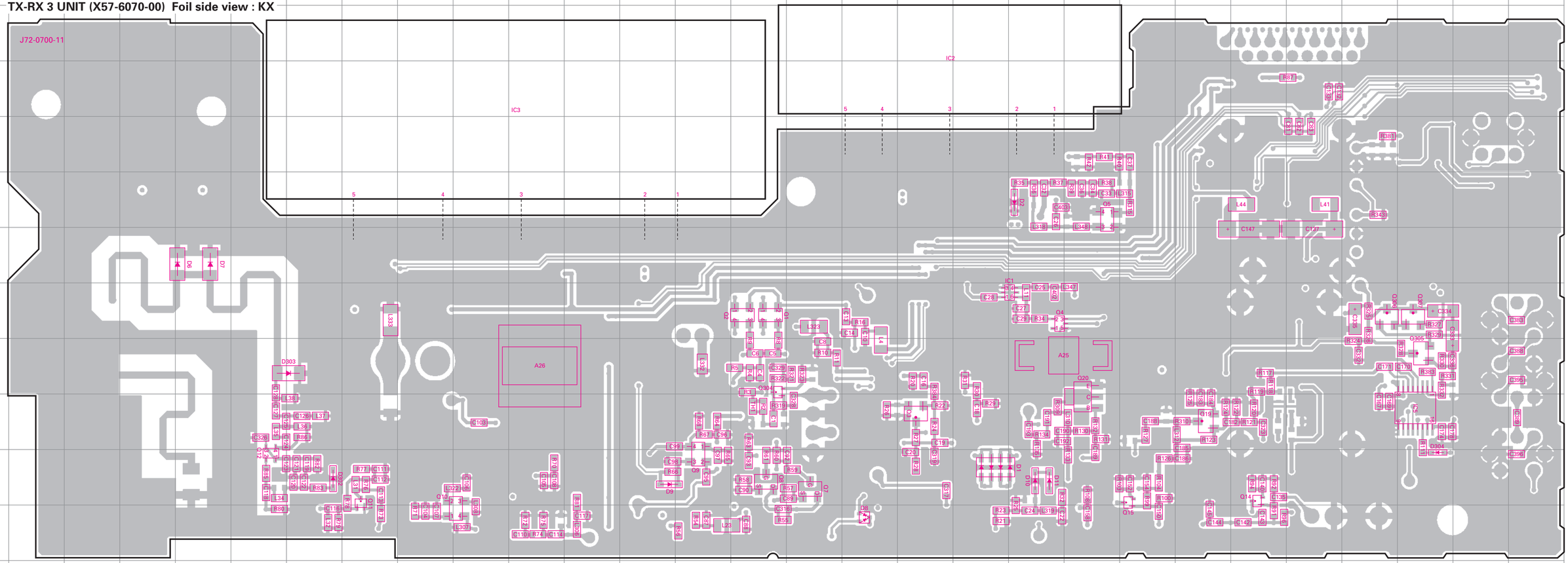

TX-RX 3 UNIT (X57-6070-00) Component side view + Foil Side : KX

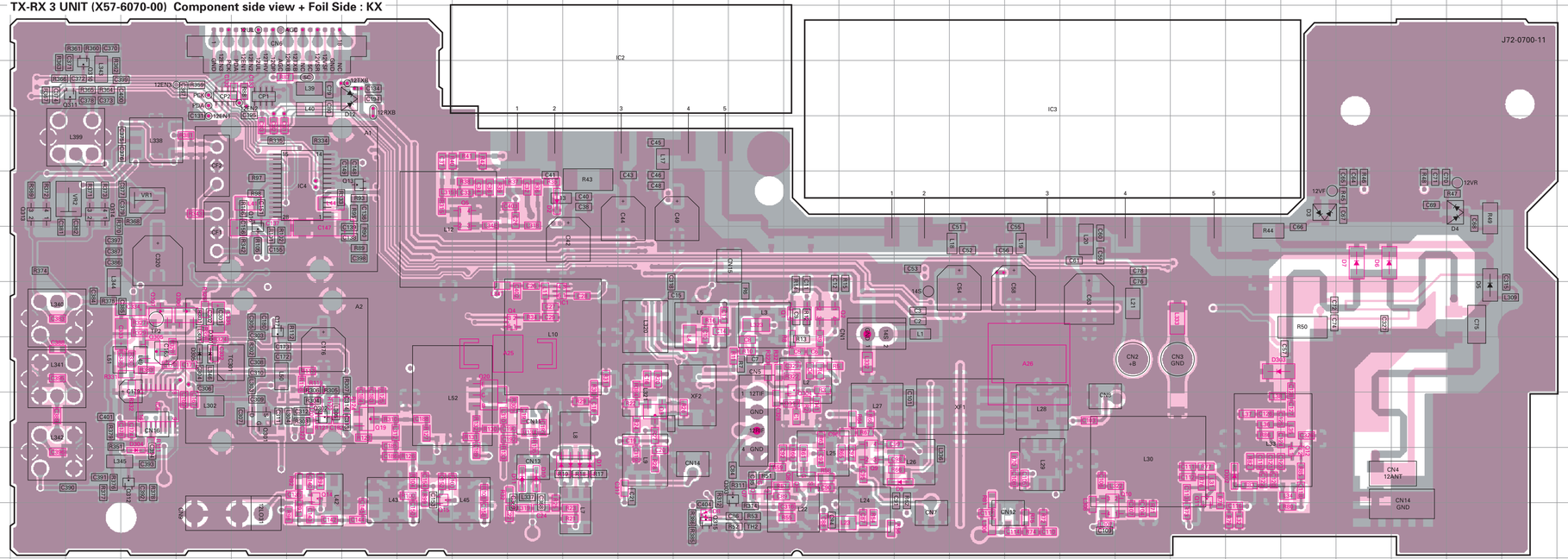

Ref No.	Address	Ref No.	Address	Ref No.	Address	Ref No.	Address	Ref No.	Address	Ref No.	Address	Ref No.	Address	Ref No.	Address	Ref No.	Address	Ref No.	Address	Ref No.	Address
IC1	7L	Q1	7Q	Q7	10P	Q12	10Z	Q17	7G	Q303	10P	Q310	3D	Q315	11O	D5	7AC	D10	10L	D303	8Y
IC2	2N	Q2	7Q	Q8	10Q	Q13	5I	Q19	9I	Q304	8Q	Q311	3D	D1	10M	D6	6AA	D11	10L	D304	10E
IC3	3U	Q3	9N	Q9	10R	Q14	10H	Q20	9K	Q305	8E	Q312	10E	D2	5L	D7	6AA	D12	3I	D305	8F
IC4	5H	Q4	7L	Q10	11V	Q15	10J	Q301	9G	Q306	7F	Q313	5C	D3	5Z	D8	11O	D301	8F		
IC5	9E	Q5	5K	Q11	10X	Q16	6G	Q302	9H	Q307	7E	Q314	5D	D4	5AC	D9	10S	D302	10Y		

AK4518
M62364FP
TC74LVX4245FS

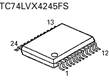

LC73881M



TA75W01FU
TC7WU04FU



AT25128N10SI27
TC7WH74FU



ADM3202ARU
AD9835BRU
TA3113GFN
TC74HC4050AFT



TC74VHC02FT
TC74VHC04FT
TC74VHC32FT



FMA1A



UPC2709TB



TGT0210Q
TMT0111Q



M62003FP
TA75W393FU
TA4101F
UPC1678G



BU2099FV



29LV800BAxxxxx
29LV800BJxxxxx



30624FGAGxxxxx



TA48M033F
TA7805F
TA7808F



320VC5402PGE

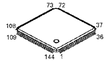

AD9851BRS

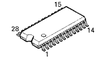

UMC2N
UMW1

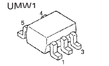

AK4524

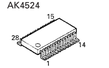

2SC3022

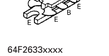

64F2633xxxx
SED1526F0A

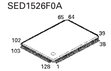

X62FP1802P
XC62FP3302P

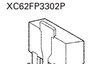

2SC5125

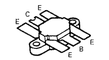

Component side
Pattern 1
Pattern 2
Pattern 3
Pattern 4
Foil side

● Connect 1 and 4

TS-2000/X CIRCUIT DIAGRAM

Note : Components marked with a dot (·) are parts of pattern 1.

TX-RX3 UNIT (1.2G) (X57-6070-00)

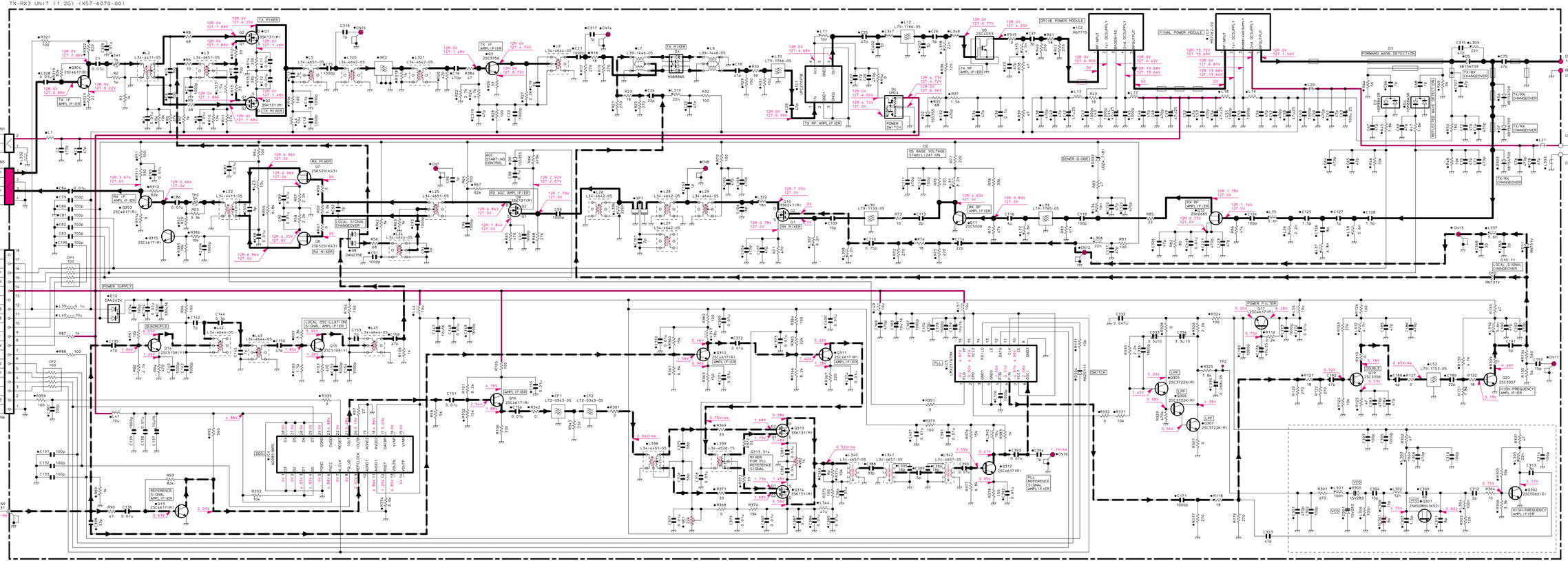

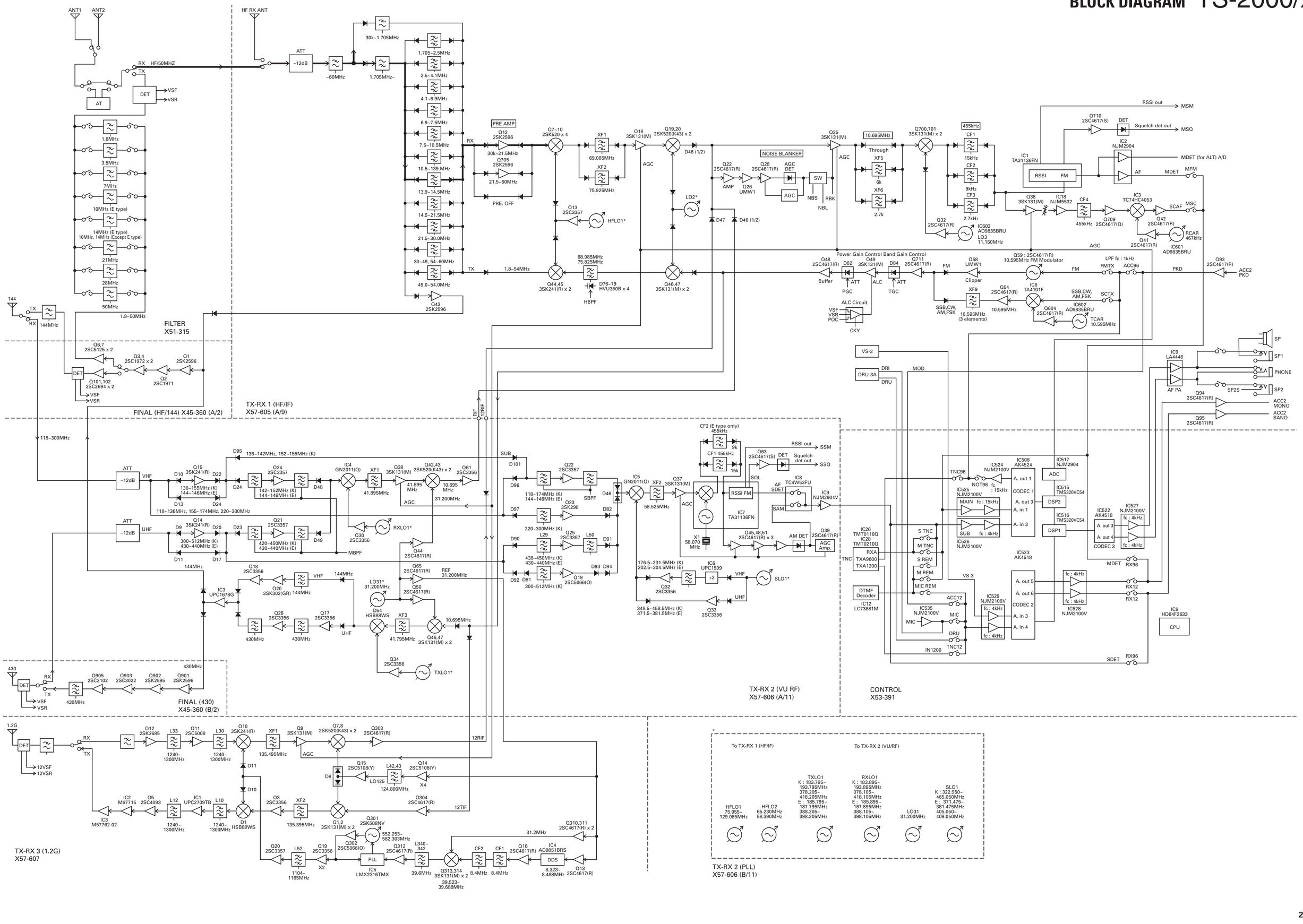
ANT1
ANT2
HF RX ANT
RX HF/50MHZ
TX
AT
DET
VSF
VSR
ATT
-12dB
~60MHz
30k~1.705MHz
1.705MHz~
1.705~2.5MHz
2.5~4.1MHz
4.1~6.9MHz
6.9~7.5MHz
7.5~10.5MHz
10.5~139.MHz
13.9~14.5MHz
14.5~21.5MHz
21.5~30.0MHz
30~49, 54~60MHz
49.0~54.0MHz
1.8MHz
3.5MHz
7MHz
10MHz (E type)
14MHz (E type)
10MHz, 14MHz (Except E type)
21MHz
28MHz
50MHz
1.8~50MHz
Q43 2SK2596
PRE AMP
Q12 2SK2596
30k~21.5MHz
Q705 2SK2596
21.5~60MHz
PRE. OFF
Q7~10 2SK520 x 4
XF1
69.085MHz
XF2
75.925MHz
Q18 3SK131(M)
Q19,20 2SK520(K43) x 2
D46 (1/2)
AGC
LO2*
Q13 2SC3357
HFLO1*
68.985MHz
75.825MHz
D76~79 HVU350B x 4
HBPF
Q44,45 3SK241(R) x 2
Q46,47 3SK131(M) x 2
D47
D46 (1/2)
NOISE BLOCKER
Q22 2SC4617(R)
AMP
Q26 UMW1
Q28 2SC4617(R)
AGC DET
AGC
NBS
SW
RBK
NBL
Q25 3SK131(M)
AGC
10.695MHz
Through
XF5
6k
XF6
2.7k
Q700,701 3SK131(M) x 2
455kHz
CF1
15kHz
CF2
9kHz
CF3
2.7kHz
Q32 2SC4617(R)
IC603 AD9835BRU
LO3 11.150MHz
RSSI out
MSM
Q710 2SC4617(S)
DET
Squelch det out
MSQ
IC1 TA31136FN
RSSI
FM
IC2 NJM2904
MDET (for ALT) A/D
AF
MDET
MFM
Q38 3SK131(M)
IC18 NJM5532
CF4
455kHz
Q709 2SC4617(Q)
IC3 TC74HC4053
SCAF
MSC
Q42 2SC4617(R)
Q41 2SC4617(R)
RCAR 467kHz
IC601 AD9835BRU
AGC
Power Gain Control Band Gain Control
Q48 2SC4617(R)
D82
Q49 3SK131(M)
D84
Q711 2SC4617(R)
Buffer
ATT
PGC
ALC
ATT
TGC
FM
Q58 UMW1
Clipper
Q59 : 2SC4617(R)
10.595MHz FM Modulator
FM
LPF fc : 1kHz
FMTX
ACC96
PKD
Q93 2SC4617(R)
ACC2 PKD
ALC Circuit
VSF
VSR
POC
CKY
XF9
SSB,CW, AM,FSK
10.595MHz (3 elements)
Q54 2SC4617(R)
10.595MHz
IC6 TA4101F
SSB,CW, AM,FSK
SCTX
Q604 2SC4617(R)
IC602 AD9835BRU
TCAR 10.595MHz
144
TX
RX
144MHz
FILTER X51-315
Q6,7 2SC5125 x 2
Q3,4 2SC1972 x 2
Q1 2SK2596
Q101,102 2SC2694 x 2
Q2 2SC1971
VSF
VSR
FINAL (HF/144) X45-360 (A/2)
TX-RX 1 (HF/IF) X57-605 (A/9)
118~300MHz
D95
136~142MHz, 152~155MHz (K)
ATT
-12dB
VHF
D10
Q15 3SK241(R)
D22
136~155MHz (K)
144~146MHz (E)
D13
D24
Q24 2SC3357
142~152MHz (K)
144~146MHz (E)
D48
IC4 GN2011(Q)
XF1
41.895MHz
Q38 3SK131(M)
Q42,43 2SK520(K43) x 2
41.895 MHz
10.695 MHz
31.200MHz
AGC
Q61 2SC3356
Q30 2SC3356
RXLO1*
118~136MHz, 155~174MHz, 220~300MHz
ATT
-12dB
UHF
D9
Q14 3SK241(R)
D20
300~512MHz (K)
430~440MHz (E)
D11
D17
Q21 2SC3357
420~450MHz (K)
430~440MHz (E)
D49
MBPF
Q44 2SC4617(R)
144MHz
Q18 2SC3356
VHF
144MHz
Q20 3SK302(GR)
144MHz
IC3 UPC1678G
LO31* 31.200MHz
D54 HSB88WS
XF3
41.795MHz
Q50 2SC4617(R)
REF 31.200MHz
10.695MHz
Q46,47 3SK131(M) x 2
Q26 2SC3356
Q17 2SC3356
430MHz
430MHz
UHF
Q34 2SC3356
TXLO1*
SUB
D101
D96
118~174MHz (K)
144~146MHz (E)
Q22 2SC3357
SBPF
D46
D97
220~300MHz (K)
Q23 3SK298
D82
D90
438~450MHz (K)
430~440MHz (E)
Q25 2SC3357
L29
L50
D91
D92
D81
300~512MHz (K)
Q19 2SC5066(O)
D93
D94
CF2 (E type only)
455kHz
9k
CF1 455kHz
15k
RSSI out
SSM
Q63 2SC4617(S)
DET
Squelch det out
SSQ
SQL
IC8 TC4W53FU
AF
SDET
SAM
IC9 NJM2904V
RSSI FM
IC7 TA31136FN
X1 58.070 MHz
Q45,48,51 2SC4617(R) x 3
AM DET
Q39 2SC4617(R)
AGC Amp.
IC5 GN2011(Q)
XF2
58.525MHz
Q37 3SK131(M)
AGC
176.5~231.5MHz (K)
202.5~204.5MHz (E)
Q32 2SC3356
IC6 UPC1509
÷2
VHF
SLO1*
UHF
348.5~458.5MHz (K)
371.5~381.5MHz (E)
Q33 2SC3356
12RIF
RIF
TX-RX 2 (VU RF) X57-606 (A/11)
VS-3
DRU-3A
DRI
DRU
MOD
CONTROL X53-391
IC9 LA4446
AF PA
SP
SP1
PHONE
SP2S
SP2
Q94 2SC4617(R)
ACC2 MONO
Q95 2SC4617(R)
ACC2 SANO
IC26 TMT0110Q
IC28 TMT0210Q
RXA
TXA9600
TXA1200
TNC
DTMF Decoder
IC12 LC73881M
TNC96
NOT96
IC524 NJM2100V
IC508 AK4524
A. out 1
CODEC 1
A. out 3
A. in 1
A. in 3
IC517 NJM2904
ADC
IC515 TMS320VC54
DSP2
IC516 TMS320VC54
DSP1
IC525 NJM2100V
MAIN fc : 15kHz
SUB fc : 4kHz
IC526 NJM2100V
fc : 15kHz
S TNC
M TNC
S REM
M REM
MIC REM
ACC12
MIC
DRU
TNC12
IN1200
IC535 NJM2100V
MIC
VS-3
IC523 AK4518
A. out 5
A. out 6
CODEC 2
A. in 3
A. in 4
IC529 NJM2100V
IC528 NJM2100V
fc : 4kHz
IC522 AK4518
A. out 3
A. out 4
CODEC 3
IC527 NJM2100V
MDET
RX96
RX12
SDET
IC8 HD64F2633
CPU
1.2G
RX
TX
12VSF
12VSR
Q12 2SK2685
L33
1240~ 1300MHz
Q11 2SC5008
L30
1240~ 1300MHz
Q10 3SK241(R)
XF1
135.495MHz
Q9 3SK131(M)
Q7,8 2SK520(K43) x 2
Q303 2SC4617(R)
AGC
12RIF
D11
D10
D8
Q15 2SC5108(Y)
LO125
L42,43
124.800MHz
Q14 2SC5108(Y)
X4
IC2 M67715
Q5 2SC4093
L12
1240~ 1300MHz
IC1 UPC2709TB
L10
1240~ 1300MHz
IC3 M57762-02
D1 HSB88WS
Q3 2SC3356
XF2
135.395MHz
Q1,2 3SK131(M) x 2
Q304 2SC4617(R)
12TIF
Q301 2SK508NV
552.253~ 582.303MHz
Q302 2SC5066(O)
Q310,311 2SC4617(R) x 2
31.2MHz
Q20 2SC3357
L52
1104~ 1165MHz
Q19 2SC3356
X2
PLL
IC5 LMX2316TMX
Q312 2SC4617(R)
L340~ 342
39.6MHz
Q313,314 3SK131(M) x 2
39.523~ 39.688MHz
CF2
8.4MHz
CF1
8.4MHz
Q16 2SC4617(R)
IC4 AD9851BRS
DDS
8.323~ 8.488MHz
Q13 2SC4617(R)
TX-RX 3 (1.2G) X57-607
430
RX
TX
VSF
VSR
Q905 2SC3102
Q903 2SC3022
Q902 2SK2595
Q901 2SK2596
430MHz
430MHz
FINAL (430) X45-360 (B/2)
To TX-RX 1 (HF/IF)
To TX-RX 2 (VU/RF)
HFLO1 75.955~ 129.085MHz
HFLO2 65.230MHz 58.390MHz
TXLO1 K : 183.795~ 193.795MHz 378.205~ 418.205MHz E : 185.795~ 187.795MHz 388.205~ 398.205MHz
RXLO1 K : 183.895~ 193.895MHz 378.105~ 418.105MHz E : 185.895~ 187.895MHz 388.105~ 398.105MHz
LO31 31.200MHz
SLO1 K : 322.950~ 465.050MHz E : 371.475~ 381.475MHz 405.050~ 409.050MHz
TX-RX 2 (PLL) X57-606 (B/11)

TS-2000/X BLOCK DIAGRAM

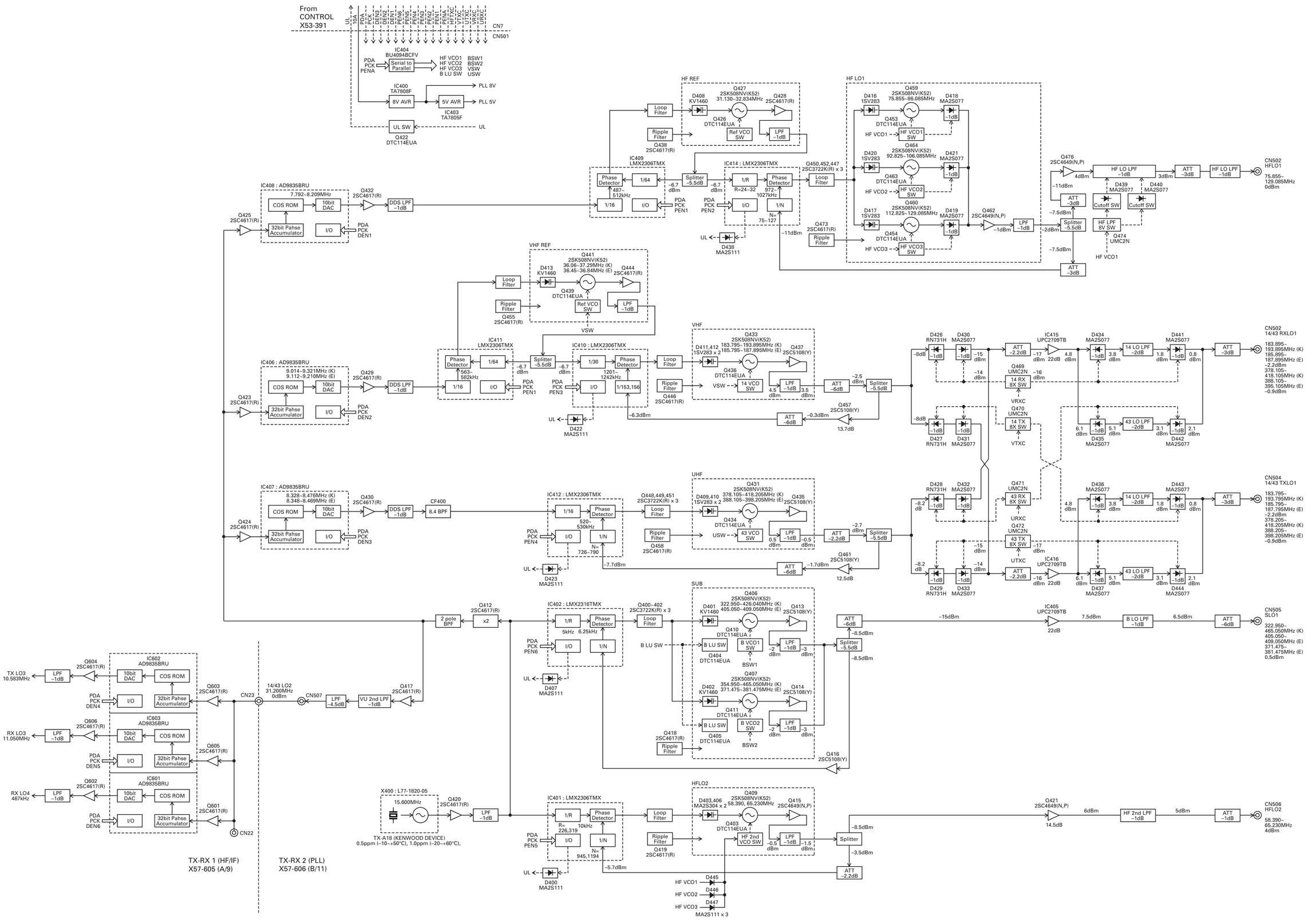

LEVEL DIAGRAM (RX SECTION)

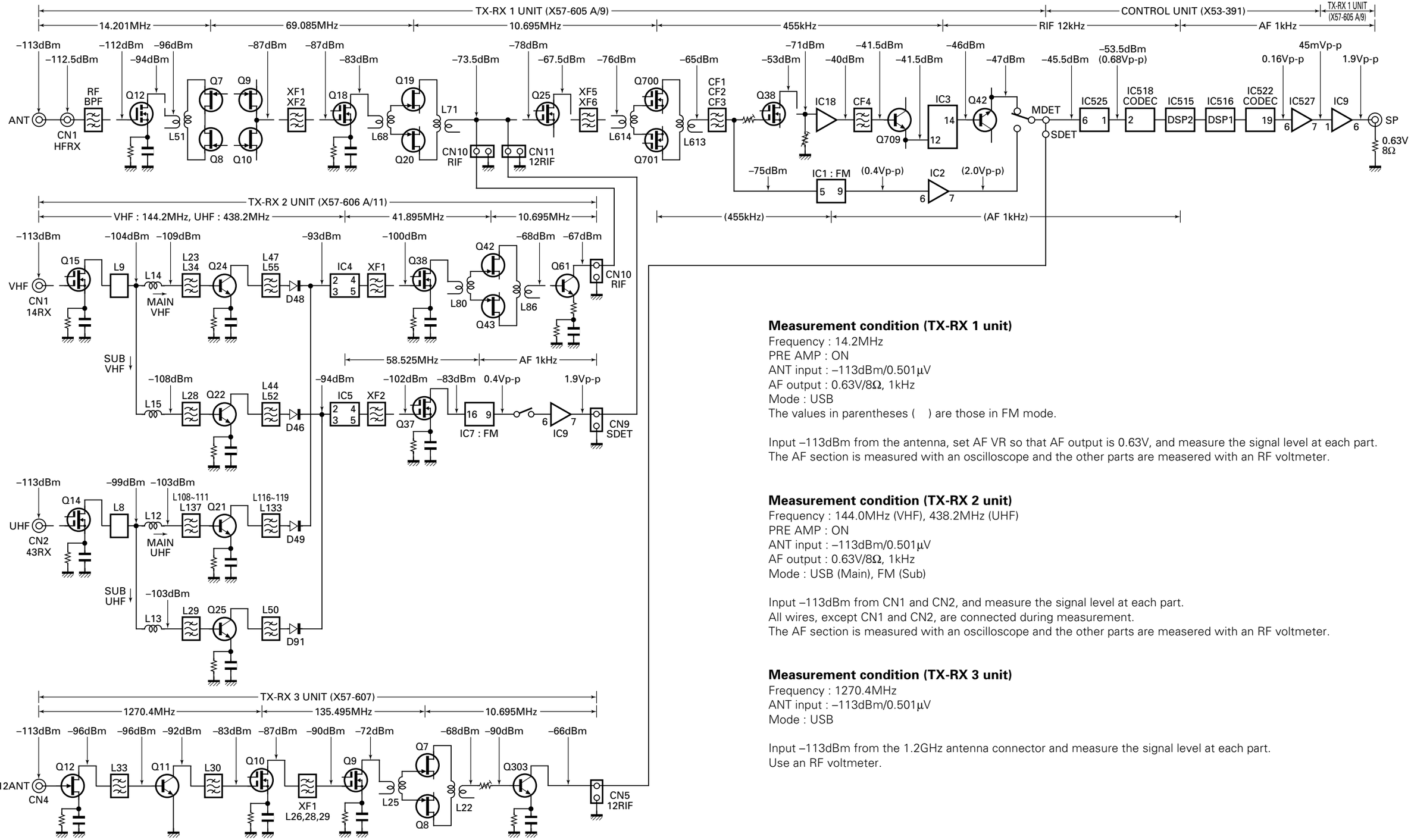

Measurement condition (TX-RX 1 unit)
Frequency : 14.2MHz
PRE AMP : ON
ANT input : –113dBm/0.501μV
AF output : 0.63V/8Ω, 1kHz
Mode : USB
The values in parentheses ( ) are those in FM mode.

Input –113dBm from the antenna, set AF VR so that AF output is 0.63V, and measure the signal level at each part.
The AF section is measured with an oscilloscope and the other parts are measered with an RF voltmeter.

Measurement condition (TX-RX 2 unit)
Frequency : 144.0MHz (VHF), 438.2MHz (UHF)
PRE AMP : ON
ANT input : –113dBm/0.501μV
AF output : 0.63V/8Ω, 1kHz
Mode : USB (Main), FM (Sub)

Input –113dBm from CN1 and CN2, and measure the signal level at each part.
All wires, except CN1 and CN2, are connected during measurement.
The AF section is measured with an oscilloscope and the other parts are measered with an RF voltmeter.

Measurement condition (TX-RX 3 unit)
Frequency : 1270.4MHz
ANT input : –113dBm/0.501μV
Mode : USB

Input –113dBm from the 1.2GHz antenna connector and measure the signal level at each part.
Use an RF voltmeter.

LEVEL DIAGRAM (TX SECTION)

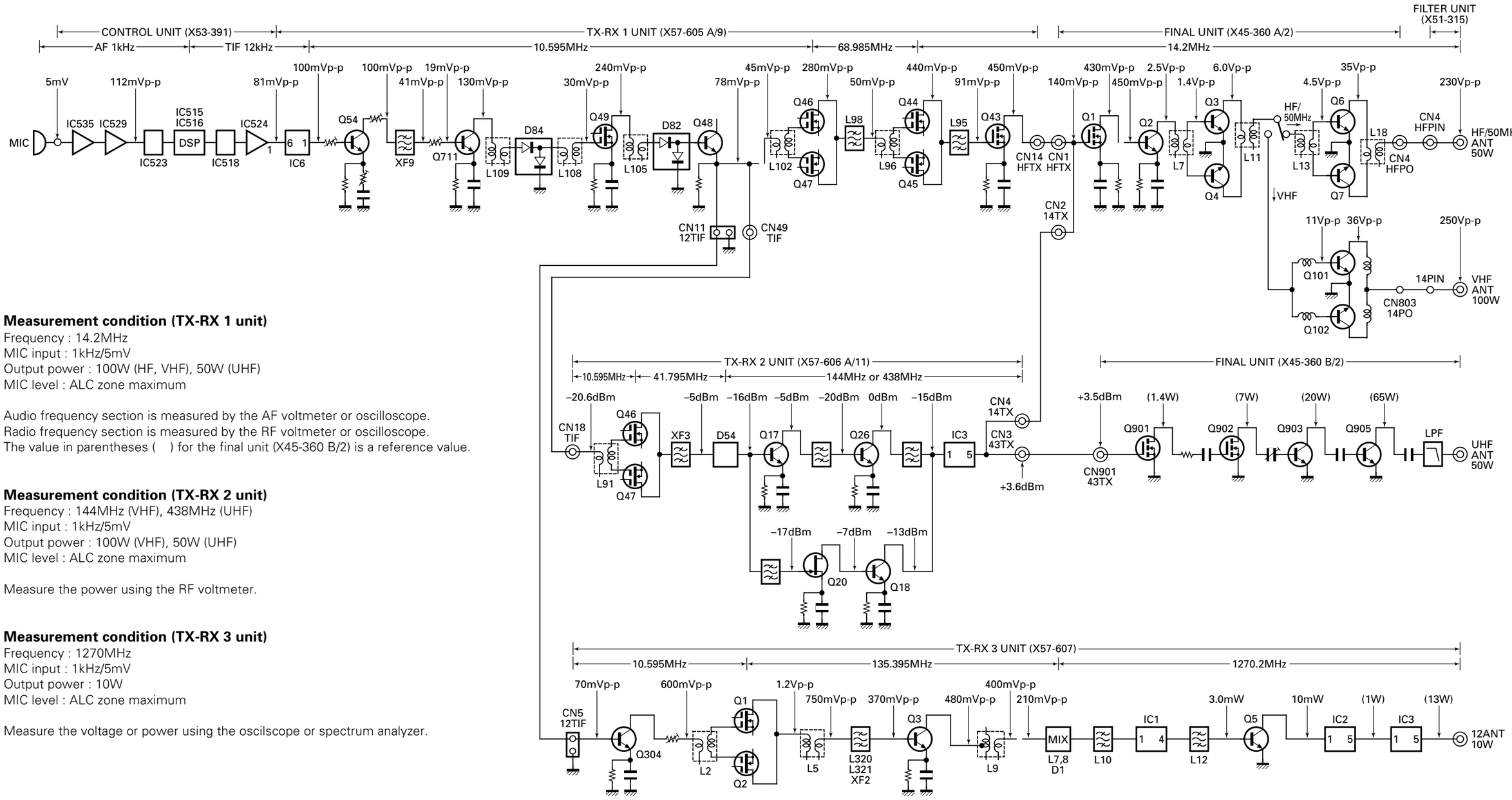

Measurement condition (TX-RX 1 unit)
Frequency : 14.2MHz
MIC input : 1kHz/5mV
Output power : 100W (HF, VHF), 50W (UHF)
MIC level : ALC zone maximum

Audio frequency section is measured by the AF voltmeter or oscilloscope.
Radio frequency section is measured by the RF voltmeter or oscilloscope.
The value in parentheses ( ) for the final unit (X45-360 B/2) is a reference value.

Measurement condition (TX-RX 2 unit)
Frequency : 144MHz (VHF), 438MHz (UHF)
MIC input : 1kHz/5mV
Output power : 100W (VHF), 50W (UHF)
MIC level : ALC zone maximum

Measure the power using the RF voltmeter.

Measurement condition (TX-RX 3 unit)
Frequency : 1270MHz
MIC input : 1kHz/5mV
Output power : 10W
MIC level : ALC zone maximum

Measure the voltage or power using the oscilscope or spectrum analyzer.

MC-52DM (MULTI-FUNCTION MICROPHONE WITH DTMF)

External View



Parts List

Ref. No.	New parts	Parts No.	Description
		A02-1982-08	Case (Front)
		A02-1983-08	Case (Rear)
		E30-3243-08	Microphone cord assy (Metal)
		K29-5101-08	Knob (PTT)
		K29-5102-08	Knob (Up, Down)
		K29-5103-08	Key top (20 key)
		K29-5104-08	Knob (Lock)
SW3,4		S40-1117-05	Tact switch (Up, Down)
SW2		S62-0441-08	Slide switch (Lock)
SW1		S70-0465-08	Tact switch (PTT)
		T91-0570-08	Microphone element
IC1		LR40872	IC
Q1-3		2SC1623	Transistor

Connector End View

Metal plug (8P)

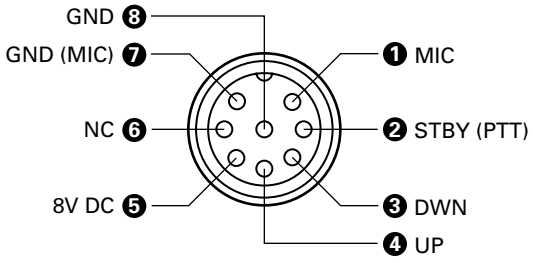

Specifications

Type ..... Electret capacitor
Power requirement ..... 8.0V DC ± 10%
Current drain ..... 35mA or less
Dimensions (WxHxD) ..... 65 x 90 x 30 mm
2-9/16 x 3-17/32 x 1-13/16 in
Weight ..... Approx. 180g / 6.3oz
Sensitivity .....–70dB±3dB (at 1kHz) (0dB = 1V/μbar)

Adjustment

Item	Condition	Test equipment / Measurement	Adjustment	Specifications / Remarks
DTMF output level	[3], [6] key at same time push	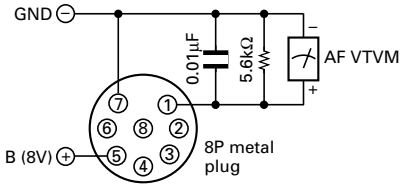	VR1	2.4mV±0.01mV

MC-52DM (MULTI-FUNCTION MICROPHONE WITH DTMF)

Schamatic Diagram

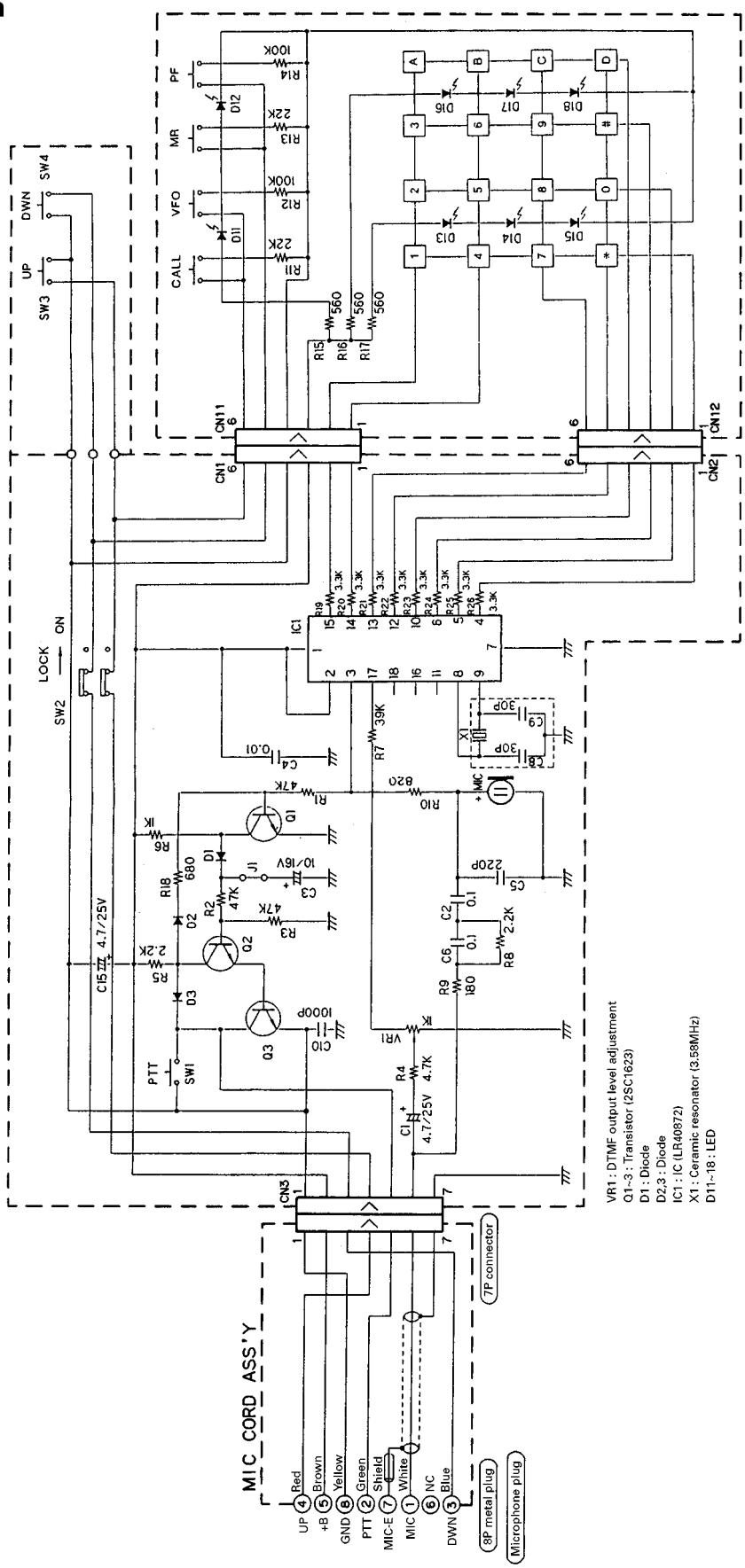

UT-20 (1200MHz All Mode Unit) / RC-2000 (Mobile Controller) / ARCP-2000 (Radio Control Program)

UT-20 External View



Service center installation only.
Contact an authorized dealer for details.

RC-2000 External View

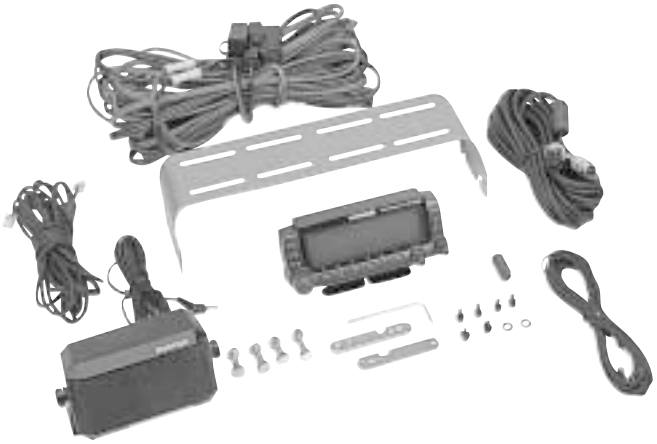

ARCP-2000 External View



System requirements :

- IBM PC/AT and compatible machines with Microsoft® Windows®95 or Windows®98.
- Intel®Pentium®75MHz or higher processor (Pentium® 133MHz or higher recommended).
- CD-ROM Drive
- 800 x 600 screen resolution or higher.
- Mouse or compatible pointing device.
- RS-232C (Serial port)
- 6MB of RAM or higher.
- At least 5MB of available hard-disk space.

SPECIFICATIONS

General

Mode ..... J3E (LSB, USB) A1A (CW) A3E (AM) F3E (FM) F1D (FSK) F2D
Number of memory channels 300
Antenna impedance ..... 50Ω (With antena tuner 16.7 to 150Ω)
Supply voltage ..... DC 13.8V ± 15%
Ground method ..... Negative ground
Current
  Transmit (Max.) ..... 20.5A or less
  Receive (No signal) ..... 2.6A or less
Usable temperature range ..... –10°C to +50°C (+14°F to +122°F)
Frequency stability (–10°C to +50°C)
  Main Other mode ..... Within ±0.5 x 10^{-6} (Within ±0.5ppm)
  FM mode ..... ±0.5 x 10^{-6} ±2kHz
  Sub ..... ±0.5 x 10^{-6} ±600Hz
Frequency accuracy (at room temperature)
  Main Other mode ..... ±0.5 x 10^{-6} (±0.5ppm)
  FM mode ..... ±0.5 x 10^{-6} ±500Hz
  Sub ..... ±0.5 x 10^{-6} ±600Hz
Dimensions (W x H x D) ..... 270 x 96 x 317 mm / 10.6 x 3.8 x 12.5 in
  (Projections included) ..... (281 x 107 x 371 mm / 11.1 x 4.2 x 14.6 in)
Weight ..... TS-2000 : Approx. 7.8kg (17.2 lbs) TS-2000X : Approx. 8.2kg (18.1 lbs)

Transmitter

Frequency range
  160m band ..... 1.8 to 2.0MHz (K) 1.81 to 2.0MHz (E) 1.83 to 1.85MHz (E2)
  80m band ..... 3.5 to 4.0MHz (K) 3.5 to 3.8MHz (E,E2)
  40m band ..... 7.0 to 7.3MHz (K) 7.0 to 7.1MHz (E,E2)
  30m band ..... 10.1 to 10.15MHz
  20m band ..... 14.0 to 14.35MHz
  17m band ..... 18.068 to 18.168MHz
  15m band ..... 21.0 to 21.45MHz
  12m band ..... 24.89 to 24.99MHz
  10m band ..... 28.0 to 29.7MHz
  6m band ..... 50.0 to 54.0MHz (K) 50.0 to 52.0MHz (E) 50.0 to 50.2MHz (E2)
  2m band ..... 144 to 148MHz (K) 144 to 146MHz (E,E2)
  70cm band ..... 430 to 450MHz (K) 430 to 440MHz (E,E2)
  23cm band ..... 1240 to 1300MHz (TS-2000X)
Output power
  SSB/CW/FSK/FM Max. ..... 100W (1.8 to 144MHz) / 50W (430 (440) MHz) / 10W (1.2GHz)
  Min. ..... 5W (1.8 to 144MHz) / 5W (430 (440) MHz) / 1W (1.2GHz)
  AM Max. ..... 25W (1.8 to 144MHz) / 12.5W (430 (440) MHz) / 2.5W (1.2GHz)
  Min. ..... 5W (1.8 to 144MHz) / 5W (430 (440) MHz) / 1W (1.2GHz)
Modulation
  SSB ..... Balanced
  FM ..... Reactance
  AM ..... Low level
Spurious emissions
  1.8 to 29.7MHz ..... –50dB or less
  50.0 to 440 (450) MHz ..... –60dB or less
  1240 to 1300MHz ..... –50dB or less
Carrier suppression ..... 50dB or more
Unwanted sideband suppression (Modulation frequency 1.0kHz) ..... 50dB or more
Maximum frequency deviation (FM)
  Wide ..... ±5kHz or less
  Narrow ..... ±2.5kHz or less
XIT shift frequency range ..... ±20.0kHz
Microphone impedance 600Ω

SPECIFICATIONS

Receiver

Circuit type

Main band	SSB/CW/AM/FSK	Quadruple conversion superheterodyne	
	FM	Triple conversion superheterodyne	
Sub band	FM/AM	Duble conversion superheterodyne	

Frequency range ( ) : VFO coverage range

Main band	0.5 to 30MHz, 50 to 54MHz (0.03 to 60.0MHz)	
	144 to 148MHz (K) (142 to 152MHz (K))	144 to 146MHz (E,E2)
	430 to 145MHz (K) (420 to 450MHz (K))	430 to 440MHz (E,E2)
	1240 to 1300MHz (TS-2000X)	
Sub band	144 to 148MHz (K) (118 to 174MHz (K))	144 to 146MHz (E,E2)
	438 to 450MHz (K) (220 to 512MHz (K))	430 to 440MHz (E,E2)

Intermediate frequency (IF)

Main transceiver	1st IF	HF/50MHz band : 69.085MHz or 75.925MHz
		144/430 (440)MHz band : 41.895MHz 1200MHz band : 135.495MHz
	2nd IF	10.695MHz
	3rd IF	455kHz
	4th IF	12.0kHz
Sub receiver	1st IF	58.525MHz
	2nd IF	455kHz

Sensitivity

Main band	SSB/CW/FSK (S/N 10dB)	0.5 to 1.705MHz	: 4μV or less
		1.705 to 24.5MHz	: 0.2μV or less
		24.5 to 30.0MHz	: 0.13μV or less
		50.0 to 54.0MHz	: 0.13μV or less
		144 to 146MHz	: 0.11μV or less (E,E2)
		144 to 148MHz	: 0.16μV or less (K)
		430 to 440MHz	: 0.11μV or less (E,E2)
		430 to 450MHz	: 0.11μV or less (K)
		1240 to 1300MHz	: 0.11μV or less
	AM (S/N 10dB)	0.5 to 1.705MHz	: 31.6μV or less
		1.705 to 24.5MHz	: 2.0μV or less
		24.5 to 30.0MHz	: 1.3μV or less
		50.0 to 54.0MHz	: 1.3μV or less
		144 to 146MHz	: 1.0μV or less (E,E2)
		144 to 148MHz	: 1.4μV or less (K)
		430 to 440MHz	: 1.0μV or less (E,E2)
		430 to 450MHz	: 1.0μV or less (K)
		1240 to 1300MHz	: 1.0μV or less
	FM (12dB SINAD)	28.0 to 30.0MHz	: 0.22μV or less
		50.0 to 54.0MHz	: 0.22μV or less
		144 to 146MHz	: 0.18μV or less (E,E2)
		144 to 148MHz	: 0.25μV or less (K)
		430 to 440MHz	: 0.18μV or less (E,E2)
		430 to 450MHz	: 0.18μV or less (K)
		1240 to 1300MHz	: 0.18μV or less
Sub band	AM (S/N 10dB)	144 to 146MHz	: 1.55μV or less (E,E2)
		144 to 148MHz	: 2.25μV or less (K)
		430 to 440MHz	: 1.55μV or less (E,E2)
		438 to 450MHz	: 1.55μV or less (K)
	FM (12dB SINAD)	144 to 146MHz	: 0.28μV or less (E,E2)
		144 to 148MHz	: 0.40μV or less (K)
		430 to 440MHz	: 0.28μV or less (E,E2)
		438 to 450MHz	: 0.28μV or less (K)

Selectivity

Main band	SSB (Low cut : 300Hz / Hi cut : 2600Hz)	–6dB : 2.2kHz	–60dB : 4.4kHz
	AM (Low cut : 100Hz / Hi cut : 3000Hz)	–6dB : 6.0kHz	–50dB : 12.0kHz
	FM	–6dB : 12.0kHz	–50dB : 25.0kHz
Sub band	AM	–6dB : 12.0kHz	–50dB : 25.0kHz
	FM	–6dB : 12.0kHz	–50dB : 25.0kHz

SPECIFICATIONS

Image rejection			
Main transceiver			70dB or more
Sub transceiver			60dB or more
1st IF rejection			
Main transceiver			70dB or more
Sub transceiver			60dB or more
Notch filter attenuation (at 1kHz)			30dB or more
Beat cancel attenuation (at 1kHz)			40dB or more
RIT shift frequency range			±20.0kHz
Squelch sensitivity			
Main band	SSB/CW/FSK/AM	0.5 to 1.705MHz	: 18.0μV or less
		1.8 to 28.7MHz	: 1.8μV or less
		50.0 to 54.0MHz	: 1.1μV or less
		144 to 146MHz	: 1.1μV or less (E,E2)
		144 to 148MHz	: 1.1μV or less (K)
		430 to 440MHz	: 1.1μV or less (E,E2)
		430 to 450MHz	: 1.1μV or less (K)
		1240 to 1300MHz	: 1.1μV or less
	FM	28.0 to 30.0MHz	: 0.2μV or less
		50.0 to 54.0MHz	: 0.2μV or less
		144 to 146MHz	: 0.1μV or less (E,E2)
		144 to 148MHz	: 0.16μV or less (K)
		430 to 440MHz	: 0.1μV or less (E,E2)
		430 to 450MHz	: 0.1μV or less (K)
		1240 to 1300MHz	: 0.1μV or less
Sub band	AM	144 to 146MHz	: 1.1μV or less (E,E2)
		144 to 148MHz	: 1.1μV or less (K)
		430 to 440MHz	: 1.1μV or less (E,E2)
		438 to 450MHz	: 1.1μV or less (K)
	FM	144 to 146MHz	: 0.18μV or less (E,E2)
		144 to 148MHz	: 0.23μV or less (K)
		430 to 440MHz	: 0.18μV or less (E,E2)
		438 to 450MHz	: 0.18μV or less (K)
Audio output (8Ω, 10% distortion)			1.5W or more
Audio output impedance (EXT. SP1 and EXT. SP2)			4~8Ω

Specifications are subject to change without notice or obligation due to ongoing technological developments.

KENWOOD CORPORATION
14-6, Dogenzaka 1-chome, Shibuya-ku, Tokyo 150-8501, Japan

KENWOOD SERVICE CORPORATION
P.O. BOX 22745, 2201 East Dominguez Street, Long Beach, CA 90801-5745, U.S.A.

KENWOOD ELECTRONICS CANADA INC.
6070 Kestrel Road, Mississauga, Ontario, Canada L5T 1S8

KENWOOD ELECTRONICS DEUTSCHLAND GMBH
Rembrücker Str. 15, 63150 Heusenstamm, Germany

KENWOOD ELECTRONICS BELGIUM N.V.
Mechelsesteenweg 418 B-1930 Zaventem, Belgium

KENWOOD ELECTRONICS FRANCE S.A.
13, Boulevard Ney, 75018 Paris, France

KENWOOD ELECTRONICS U.K. LIMITED
KENWOOD House, Dwight Road, Watford, Herts., WD1 8EB United Kingdom

KENWOOD ELECTRONICS EUROPE B.V.
Amsterdamseweg 37, 1422 AC Uithoorn, The Netherlands

KENWOOD ELECTRONICS ITALIA S.p.A.
Via G. Sirtori, 7/9 20129 Milano, Italy

KENWOOD IBERICA S.A.
Bolivia, 239-08020 Barcelona, Spain

KENWOOD ELECTRONICS AUSTRALIA PTY. LTD.
(A.C.N. 001 499 074)
16 Giffnock Avenue, North Ryde, N.S.W. 2113 Australia

KENWOOD ELECTRONICS (HONG KONG) LTD.
Unit 3712-3724, Level 37, Tower one Metroplaza, 223 Hing Fong Road, Kwai Fong, N.T., Hong Kong

KENWOOD ELECTRONICS TECHNOLOGIES(S) PTE LTD.TE LTD.
Sales Marketing Division
1 Ang Mo Kio Street 63, Singapore 569110

downloaded by
www.radioamatore.info